GROUP TAB LOCATOR

	Introduction
0	Lubrication & Maintenance
2	Suspension
3	Differential & Driveline
5	Brakes
6	Clutch
7	Cooling
8A	Audio
8B	Chime/Buzzer
8E	Electronic Control Modules
8F	Engine Systems
8G	Heated Systems
8H	Horn
8I	Ignition Control
8J	Instrument Cluster
8L	Lamps
8M	Message Systems
8N	Power Systems
8O	Restraints
8P	Speed Control
8Q	Vehicle Theft Security
8R	Wipers/Washers
8W	Wiring
9	Engine
11	Exhaust System and Turbocharger
13	Frame & Bumpers
14	Fuel System
19	Steering
21	Transaxle
22	Tires/Wheels
23	Body
24	Heating & Air Conditioning
25	Emissions Control
	Component and System Index
Service Manual Comment Forms	(Rear of Manual)

INTRODUCTION

TABLE OF CONTENTS

page

BODY CODE PLATE
DESCRIPTION 1
FASTENER IDENTIFICATION
DESCRIPTION 2
FASTENER USAGE
DESCRIPTION
DESCRIPTION - FASTENER USAGE 5
DESCRIPTION - THREADED HOLE REPAIR . . 5
INTERNATIONAL SYMBOLS
DESCRIPTION 5
METRIC SYSTEM
DESCRIPTION 6
TORQUE REFERENCES
DESCRIPTION 8
VEHICLE IDENTIFICATION NUMBER
DESCRIPTION - VEHICLE IDENTIFICATION NUMBER 9
VEHICLE SAFETY CERTIFICATION LABEL
DESCRIPTION 10
E-MARK LABEL
DESCRIPTION 10
VECI LABEL
DESCRIPTION 10
MANUFACTURER PLATE
DESCRIPTION 10

BODY CODE PLATE

DESCRIPTION

The Body Code Plate (Fig. 1) is located in the engine compartment on the plenum behind the right side strut tower (Fig. 2). There are seven lines of information on the body code plate. Lines 4, 5, 6, and 7 are not used to define service information. Information reads from left to right, starting with line 3 in the center of the plate to line 1 at the bottom of the plate.

BODY CODE PLATE LINE 2

DIGITS 1, 2, AND 3
Paint procedure

DIGIT 4
Open Space

DIGITS 5 THROUGH 7
Primary paint
(Refer to 23 - BODY/PAINT - SPECIFICATIONS) for Body Color Codes.

DIGIT 8 AND 9
Open Space

DIGITS 10 THROUGH 12
Secondary Paint

DIGIT 13 AND 14
Open Space

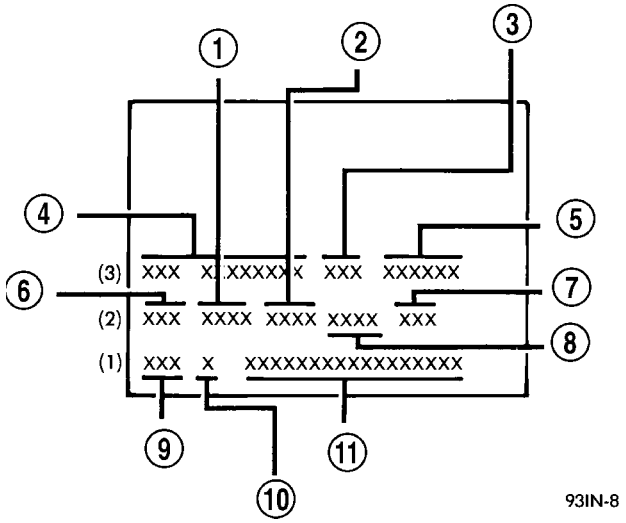

Fig. 1 BODY CODE PLATE

1 - PRIMARY PAINT
2 - SECONDARY PAINT
3 - VINYL ROOF
4 - VEHICLE ORDER NUMBER
5 - CAR LINE SHELL
6 - PAINT PROCEDURE
7 - ENGINE
8 - TRIM
9 - TRANSMISSION
10 - MARKET
11 - VIN

DIGITS 15 THROUGH 18
Interior Trim Code

DIGIT 19
Open Space

BODY CODE PLATE (Continued)

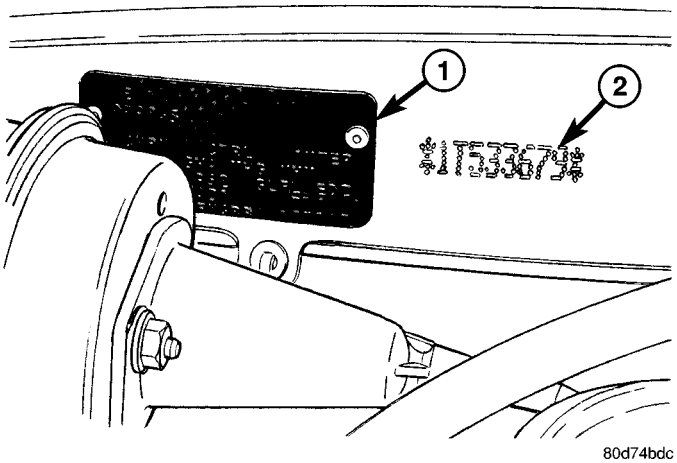

Fig. 2 BODY CODE PLATE 2

1 - BODY CODE PLATE
2 - BODY CODE EMBOSS

DIGITS 20, 21, AND 22

Engine Code

- EJD = 1.6L Four Cylinder 16 Valves SOHC Gasoline
- ECC = 2.0L Four Cylinder 16 Valves DOHC Gasoline
- EDJ = 2.2L Four Cylinder Turbo Diesel Engine
- EDZ = 2.4L Four Cylinder 16 Valves DOHC Gasoline
- EDV = 2.4L Four Cylinder 16 Valves DOHC H.O. Turbo Gasoline

DIGIT 23

Open Space

BODY CODE PLATE LINE 1

DIGITS 1, 2, AND 3

Transaxle Codes

- DGL = 41TE 4-Speed Electronic Automatic Transaxle
- DD5 = NV T350 5-Speed Manual Transaxle
- DDD = GETRAG 288 5-Speed Manual Transaxle

DIGIT 4

Open Space

DIGIT 5

Market Code

- C = Canada
- B = International
- M = Mexico
- U = United States

DIGIT 6

Open Space

DIGITS 7 THROUGH 23

Vehicle Identification Number

- (Refer to VEHICLE DATA/VEHICLE INFORMATION/VEHICLE IDENTIFICATION NUMBER - DESCRIPTION) for proper breakdown of VIN code.

IF TWO BODY CODE PLATES ARE REQUIRED

The last code shown on either plate will be followed by END. When two plates are required, the last code space on the first plate will indicate (CTD)

When a second plate is required, the first four spaces of each line will not be used due to overlap of the plates.

FASTENER IDENTIFICATION

DESCRIPTION

The SAE bolt strength grades range from grade 2 to grade 8. The higher the grade number, the greater the bolt strength. Identification is determined by the line marks on the top of each bolt head. The actual bolt strength grade corresponds to the number of line marks plus 2. The most commonly used metric bolt strength classes are 9.8 and 10.9. The metric strength class identification number is imprinted on the head of the bolt. The higher the class number, the greater the bolt strength. Some metric nuts are imprinted with a single-digit strength class on the nut face. Refer to the Fastener Identification and Fastener Strength Charts (Fig. 3) and (Fig. 4).

FASTENER IDENTIFICATION (Continued)

Bolt Markings and Torque - Metric

Commercial Steel Class

Bolt Head Markings

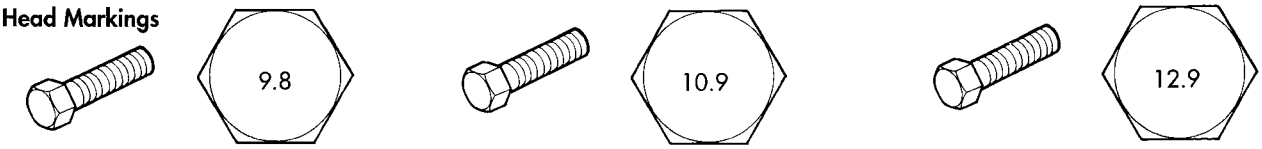

Body Size	9.8 Torque				10.9 Torque				12.9 Torque			
Diam.	Cast Iron		Aluminum		Cast Iron		Aluminum		Cast Iron		Aluminum	
mm	N•m	ft-lb	N•m	ft-lb	N•m	ft-lb	N•m	ft-lb	N•m	ft-lb	N•m	ft-lb
6	9	5	7	4	14	9	11	7	14	9	11	7
7	14	9	11	7	18	14	14	11	23	18	18	14
8	25	18	18	14	32	23	25	18	36	27	28	21
10	40	30	30	25	60	45	45	35	70	50	55	40
12	70	55	55	40	105	75	80	60	125	95	100	75
14	115	85	90	65	160	120	125	95	195	145	150	110
16	180	130	140	100	240	175	190	135	290	210	220	165
18	230	170	180	135	320	240	250	185	400	290	310	230

Bolt Markings and Torque Values - U.S. Customary

SAE Grade Number 5 8

Bolt Head Markings
These are all SAE Grade 5 (3) line

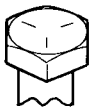

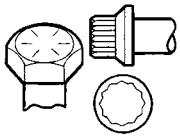

Body Size	Bolt Torque - Grade 5 Bolt: Cast Iron		Aluminum		Bolt Torque - Grade 8 Bolt: Cast Iron		Aluminum	
	N•m	ft-lb	N•m	ft-lb	N•m	ft-lb	N•m	ft-lb
1/4 - 20	9	7	8	6	15	11	12	9
- 28	12	9	9	7	18	13	14	10
5/16 - 18	20	15	16	12	30	22	24	18
- 24	23	17	19	14	33	24	25	19
3/8 - 16	40	30	25	20	55	40	40	30
- 24	40	30	35	25	60	45	45	35
7/16 - 14	60	45	45	35	90	65	65	50
- 20	65	50	55	40	95	70	75	55
1/2 - 13	95	70	75	55	130	95	100	75
- 20	100	75	80	60	150	110	120	90
9/16 - 12	135	100	110	80	190	140	150	110
- 18	150	110	115	85	210	155	170	125
5/8 - 11	180	135	150	110	255	190	205	150
- 18	210	155	160	120	290	215	230	170
3/4 - 10	325	240	255	190	460	340	365	270
- 16	365	270	285	210	515	380	410	300
7/8 - 9	490	360	380	280	745	550	600	440
- 14	530	390	420	310	825	610	660	490
1 - 8	720	530	570	420	1100	820	890	660
- 14	800	590	650	480	1200	890	960	710

80bdbd8c

Fig. 3 FASTENER IDENTIFICATION

FASTENER IDENTIFICATION (Continued)

HOW TO DETERMINE BOLT STRENGTH

	Mark	Class
Hexagon head bolt	Bolt head No. 4 — 4T; 5 — 5T; 6 — 6T; 7 — 7T; 8 — 8T; 9 — 9T; 10 — 10T; 11 — 11T	
	No mark	4T
Hexagon flange bolt w/washer hexagon bolt	No mark	4T
Hexagon head bolt	Two protruding lines	5T
Hexagon flange bolt w/washer hexagon bolt	Two protruding lines	6T
Hexagon head bolt	Three protruding lines	7T
Hexagon head bolt	Four protruding lines	8T

	Mark	Class
Stud bolt	No mark	4T
	Grooved	6T
Welded bolt		4T

95IN-4

Fig. 4 FASTENER STRENGTH

FASTENER USAGE

DESCRIPTION

DESCRIPTION - FASTENER USAGE

WARNING: USE OF AN INCORRECT FASTENER MAY RESULT IN COMPONENT DAMAGE OR PERSONAL INJURY.

Fasteners and torque specifications references in this Service Manual are identified in metric and SAE format.

During any maintenance or repair procedures, it is important to salvage all fasteners (nuts, bolts, etc.) for reassembly. If the fastener is not salvageable, a fastener of equivalent specification must be used.

DESCRIPTION - THREADED HOLE REPAIR

Most stripped threaded holes can be repaired using a Helicoil®. Follow the vehicle or Helicoil® recommendations for application and repair procedures.

INTERNATIONAL SYMBOLS

DESCRIPTION

The graphic symbols illustrated in the following International Control and Display Symbols Chart (Fig. 5) are used to identify various instrument controls. The symbols correspond to the controls and displays that are located on the instrument panel.

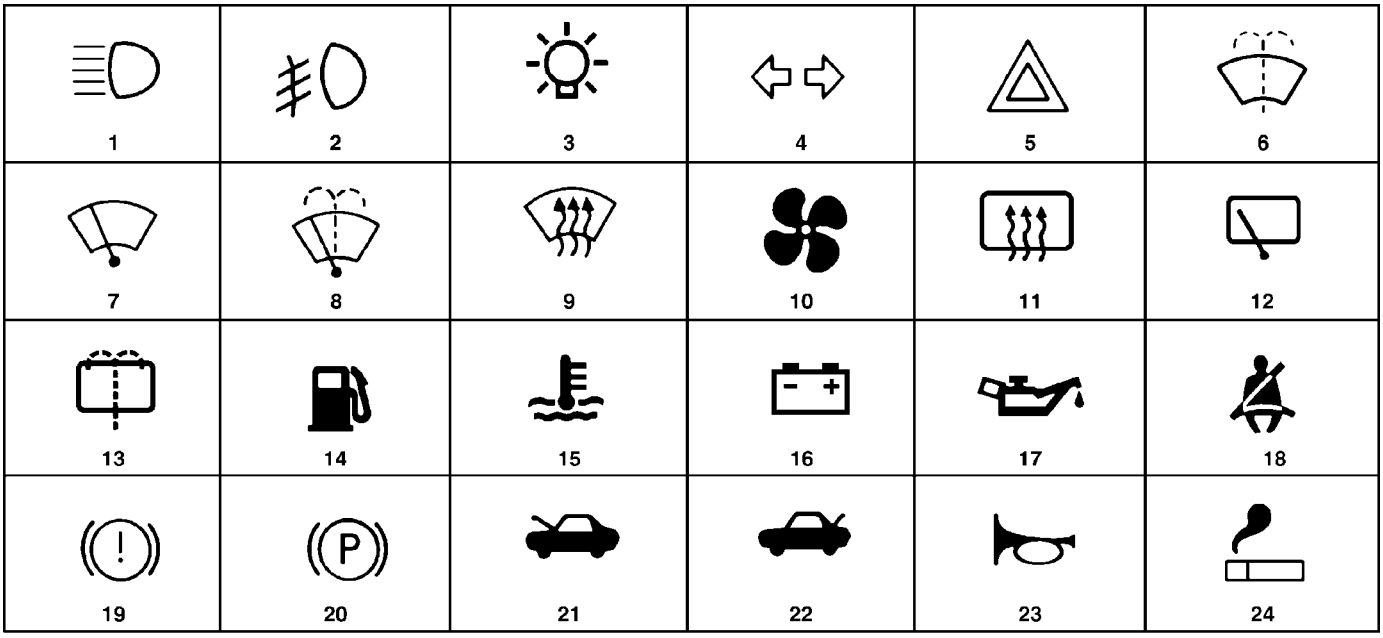

80be4788

Fig. 5 INTERNATIONAL CONTROL AND DISPLAY SYMBOLS

1	High Beam	13	Rear Window Washer
2	Fog Lamps	14	Fuel
3	Headlamp, Parking Lamps, Panel Lamps	15	Engine Coolant Temperature
4	Turn Warning	16	Battery Charging Condition
5	Hazard Warning	17	Engine Oil
6	Windshield Washer	18	Seat Belt
7	Windshield Wiper	19	Brake Failure
8	Windshield Wiper and Washer	20	Parking Brake
9	Windscreen Demisting and Defrosting	21	Front Hood
10	Ventilating Fan	22	Rear hood (Decklid)
11	Rear Window Defogger	23	Horn
12	Rear Window Wiper	24	Lighter

METRIC SYSTEM

DESCRIPTION

The metric system is based on quantities of one, ten, one hundred, one thousand and one million.

The following chart will assist in converting metric units to equivalent English and SAE units, or vise versa.

CONVERSION FORMULAS AND EQUIVALENT VALUES

MULTIPLY	BY	TO GET	MULTIPLY	BY	TO GET
in-lbs	x 0.11298	= Newton Meters (N·m)	N·m	x 8.851	= in-lbs
ft-lbs	x 1.3558	= Newton Meters (N·m)	N·m	x 0.7376	= ft-lbs
Inches Hg (60° F)	x 3.377	= Kilopascals (kPa)	kPa	x 0.2961	= Inches Hg
psi	x 6.895	= Kilopascals (kPa)	kPa	x 0.145	= psi
Inches	x 25.4	= Millimeters (mm)	mm	x 0.03937	= Inches
Feet	x 0.3048	= Meters (M)	M	x 3.281	= Feet
Yards	x 0.9144	= Meters	M	x 1.0936	= Yards
mph	x 1.6093	= Kilometers/Hr. (Km/h)	Km/h	x 0.6214	= mph
Feet/Sec	x 0.3048	= Meters/Sec (M/S)	M/S	x 3.281	= Feet/Sec
mph	x 0.4470	= Meters/Sec (M/S)	M/S	x 2.237	= mph
Kilometers/Hr. (Km/h)	x 0.27778	= Meters/Sec (M/S)	M/S	x 3.600	Kilometers/Hr. (Km/h)

COMMON METRIC EQUIVALENTS

1 inch = 25 Millimeters	1 Cubic Inch = 16 Cubic Centimeters
1 Foot = 0.3 Meter	1 Cubic Foot = 0.03 Cubic Meter
1 Yard = 0.9 Meter	1 Cubic Yard = 0.8 Cubic Meter
1 Mile = 1.6 Kilometers	

Refer to the Metric Conversion Chart to convert torque values listed in metric Newton- meters (N·m). Also, use the chart to convert between millimeters (mm) and inches (in.) (Fig. 6).

METRIC SYSTEM (Continued)

in-lbs to N•m

in- lb	N•m	in-lb	N•m	in-lb	N•m	in-lb	N•m	in-lb	N•m
2	.2260	42	4.7453	82	9.2646	122	13.7839	162	18.3032
4	.4519	44	4.9713	84	9.4906	124	14.0099	164	18.5292
6	.6779	46	5.1972	86	9.7165	126	14.2359	166	18.7552
8	.9039	48	5.4232	88	9.9425	128	14.4618	168	18.9811
10	1.1298	50	5.6492	90	10.1685	130	14.6878	170	19.2071
12	1.3558	52	5.8751	92	10.3944	132	14.9138	172	19.4331
14	1.5818	54	6.1011	94	10.6204	134	15.1397	174	19.6590
16	1.8077	56	6.3270	96	10.8464	136	15.3657	176	19.8850
18	2.0337	58	6.5530	98	11.0723	138	15.5917	178	20.1110
20	2.2597	60	6.7790	100	11.2983	140	15.8176	180	20.3369
22	2.4856	62	7.0049	102	11.5243	142	16.0436	182	20.5629
24	2.7116	64	7.2309	104	11.7502	144	16.2696	184	20.7889
26	2.9376	66	7.4569	106	11.9762	146	16.4955	186	21.0148
28	3.1635	68	7.6828	108	12.2022	148	16.7215	188	21.2408
30	3.3895	70	7.9088	110	12.4281	150	16.9475	190	21.4668
32	3.6155	72	8.1348	112	12.6541	152	17.1734	192	21.6927
34	3.8414	74	8.3607	114	12.8801	154	17.3994	194	21.9187
36	4.0674	76	8.5867	116	13.1060	156	17.6253	196	22.1447
38	4.2934	78	8.8127	118	13.3320	158	17.8513	198	22.3706
40	4.5193	80	9.0386	120	13.5580	160	18.0773	200	22.5966

N•m to in-lbs

N•m	in-lb	N•m	in-lb	N•m	in-lb	N•m	in-lb	N•m	in-lb
.2	1.7702	4.2	37.1747	8.2	72.5792	12.2	107.9837	16.2	143.3882
.4	3.5404	4.4	38.9449	8.4	74.3494	12.4	109.7539	16.4	145.1584
.6	5.3107	4.6	40.7152	8.6	76.1197	12.6	111.5242	16.6	146.9287
.8	7.0809	4.8	42.4854	8.8	77.8899	12.8	113.2944	16.8	148.6989
1	8.8511	5	44.2556	9	79.6601	13	115.0646	17	150.4691
1.2	10.6213	5.2	46.0258	9.2	81.4303	13.2	116.8348	17.2	152.2393
1.4	12.3916	5.4	47.7961	9.4	83.2006	13.4	118.6051	17.4	154.0096
1.6	14.1618	5.6	49.5663	9.6	84.9708	13.6	120.3753	17.6	155.7798
1.8	15.9320	5.8	51.3365	9.8	86.7410	13.8	122.1455	17.8	157.5500
2	17.7022	6	53.1067	10	88.5112	14	123.9157	18	159.3202
2.2	19.4725	6.2	54.8770	10.2	90.2815	14.2	125.6860	18.5	163.7458
2.4	21.2427	6.4	56.6472	10.4	92.0517	14.4	127.4562	19	168.1714
2.6	23.0129	6.6	58.4174	10.6	93.8219	14.6	129.2264	19.5	172.5970
2.8	24.7831	6.8	60.1876	10.8	95.5921	14.8	130.9966	20	177.0225
3	26.5534	7	61.9579	11	97.3624	15	132.7669	20.5	181.4480
3.2	28.3236	7.2	63.7281	11.2	99.1326	15.2	134.5371	21	185.8736
3.4	30.0938	7.4	65.4983	11.4	100.9028	15.4	136.3073	22	194.7247
3.6	31.8640	7.6	67.2685	11.6	102.6730	15.6	138.0775	23	203.5759
3.8	33.6342	7.8	69.0388	11.8	104.4433	15.8	139.8478	24	212.4270
4	35.4045	8	70.8090	12	106.2135	16	141.6180	25	221.2781

ft-lbs to N•m

ft-lb	N•m	ft-lb	N•m	ft-lb	N•m	ft-lb	N•m	ft-lb	N•m
1	1.3558	21	28.4722	41	55.5885	61	82.7049	81	109.8212
2	2.7116	22	29.8280	42	56.9444	62	84.0607	82	111.1770
3	4.0675	23	31.1838	43	58.3002	63	85.4165	83	112.5328
4	5.4233	24	32.5396	44	59.6560	64	86.7723	84	113.8888
5	6.7791	25	33.8954	45	61.0118	65	88.1281	85	115.2446
6	8.1349	26	35.2513	46	62.3676	66	89.4840	86	116.6004
7	9.4907	27	36.6071	47	63.7234	67	90.8398	87	117.9562
8	10.8465	28	37.9629	48	65.0793	68	92.1956	88	119.3120
9	12.2024	29	39.3187	49	66.4351	69	93.5514	89	120.6678
10	13.5582	30	40.6745	50	67.7909	70	94.9073	90	122.0236
11	14.9140	31	42.0304	51	69.1467	71	96.2631	91	123.3794
12	16.2698	32	43.3862	52	70.5025	72	97.6189	92	124.7352
13	17.6256	33	44.7420	53	71.8583	73	98.9747	93	126.0910
14	18.9815	34	46.0978	54	73.2142	74	100.3316	94	127.4468
15	20.3373	35	47.4536	55	74.5700	75	101.6862	95	128.8026
16	21.6931	36	48.8094	56	75.9258	76	103.0422	96	130.1586
17	23.0489	37	50.1653	57	77.2816	77	104.3980	97	131.5144
18	24.4047	38	51.5211	58	78.6374	78	105.7538	98	132.8702
19	25.7605	39	52.8769	59	79.9933	79	107.1196	99	134.2260
20	27.1164	40	54.2327	60	81.3491	80	108.4654	100	135.5820

N•m to ft-lbs

N•m	ft-lb	N•m	ft-lb	N•m	ft-lb	N•m	ft-lb	N•m	ft-lb
1	.7376	21	15.9888	41	30.2400	61	44.9913	81	59.7425
2	1.4751	22	16.2264	42	30.9776	62	45.7289	82	60.4801
3	2.2127	23	16.9639	43	31.7152	63	46.4664	83	61.2177
4	2.9502	24	17.7015	44	32.4527	64	47.2040	84	61.9552
5	3.6878	25	18.4391	45	33.1903	65	47.9415	85	62.6928
6	4.4254	26	19.1766	46	33.9279	66	48.6791	86	63.4303
7	5.1629	27	19.9142	47	34.6654	67	49.4167	87	64.1679
8	5.9005	28	20.6517	48	35.4030	68	50.1542	88	64.9545
9	6.6381	29	21.3893	49	36.1405	69	50.8918	89	65.6430
10	7.3756	30	22.1269	50	36.8781	70	51.6293	90	66.3806
11	8.1132	31	22.8644	51	37.6157	71	52.3669	91	67.1181
12	8.8507	32	23.6020	52	38.3532	72	53.1045	92	67.8557
13	9.5883	33	24.3395	53	39.0908	73	53.8420	93	68.5933
14	10.3259	34	25.0771	54	39.8284	74	54.5720	94	69.3308
15	11.0634	35	25.8147	55	40.5659	75	55.3172	95	70.0684
16	11.8010	36	26.5522	56	41.3035	76	56.0547	96	70.8060
17	12.5386	37	27.2898	57	42.0410	77	56.7923	97	71.5435
18	13.2761	38	28.0274	58	42.7786	78	57.5298	98	72.2811
19	14.0137	39	28.7649	59	43.5162	79	58.2674	99	73.0187
20	14.7512	40	29.5025	60	44.2537	80	59.0050	100	73.7562

in. to mm

in.	mm	in.	mm	in.	mm	in.	mm	in.	mm
.01	.254	.21	5.334	.41	10.414	.61	15.494	.81	20.574
.02	.508	.22	5.588	.42	10.668	.62	15.748	.82	20.828
.03	.762	.23	5.842	.43	10.922	.63	16.002	.83	21.082
.04	1.016	.24	6.096	.44	11.176	.64	16.256	.84	21.336
.05	1.270	.25	6.350	.45	11.430	.65	16.510	.85	21.590
.06	1.524	.26	6.604	.46	11.684	.66	16.764	.86	21.844
.07	1.778	.27	6.858	.47	11.938	.67	17.018	.87	22.098
.08	2.032	.28	7.112	.48	12.192	.68	17.272	.88	22.352
.09	2.286	.29	7.366	.49	12.446	.69	17.526	.89	22.606
.10	2.540	.30	7.620	.50	12.700	.70	17.780	.90	22.860
.11	2.794	.31	7.874	.51	12.954	.71	18.034	.91	23.114
.12	3.048	.32	8.128	.52	13.208	.72	18.288	.92	23.368
.13	3.302	.33	8.382	.53	13.462	.73	18.542	.93	23.622
.14	3.556	.34	8.636	.54	13.716	.74	18.796	.94	23.876
.15	3.810	.35	8.890	.55	13.970	.75	19.050	.95	24.130
.16	4.064	.36	9.144	.56	14.224	.76	19.304	.96	24.384
.17	3.318	.37	9.398	.57	14.478	.77	19.558	.97	24.638
.18	4.572	.38	9.652	.58	14.732	.78	19.812	.98	24.892
.19	4.826	.39	9.906	.59	14.986	.79	20.066	.99	25.146
.20	5.080	.40	10.160	.60	15.240	.80	20.320	1.00	25.400

mm to in.

mm	in.	mm	in.	mm	in.	mm	in.	mm	in.
.01	.00039	.21	.00827	.41	.01614	.61	.02402	.81	.03189
.02	.00079	.22	.00866	.42	.01654	.62	.02441	.82	.03228
.03	.00118	.23	.00906	.43	.01693	.63	.02480	.83	.03268
.04	.00157	.24	.00945	.44	.01732	.64	.02520	.84	.03307
.05	.00197	.25	.00984	.45	.01772	.65	.02559	.85	.03346
.06	.00236	.26	.01024	.46	.01811	.66	.02598	.86	.03386
.07	.00276	.27	.01063	.47	.01850	.67	.02638	.87	.03425
.08	.00315	.28	.01102	.48	.01890	.68	.02677	.88	.03465
.09	.00354	.29	.01142	.49	.01929	.69	.02717	.89	.03504
.10	.00394	.30	.01181	.50	.01969	.70	.02756	.90	.03543
.11	.00433	.31	.01220	.51	.02008	.71	.02795	.91	.03583
.12	.00472	.32	.01260	.52	.02047	.72	.02835	.92	.03622
.13	.00512	.33	.01299	.53	.02087	.73	.02874	.93	.03661
.14	.00551	.34	.01339	.54	.02126	.74	.02913	.94	.03701
.15	.00591	.35	.01378	.55	.02165	.75	.02953	.95	.03740
.16	.00630	.36	.01417	.56	.02205	.76	.02992	.96	.03780
.17	.00669	.37	.01457	.57	.02244	.77	.03032	.97	.03819
.18	.00709	.38	.01496	.58	.02283	.78	.03071	.98	.03858
.19	.00748	.39	.01535	.59	.02323	.79	.03110	.99	.03898
.20	.00787	.40	.01575	.60	.02362	.80	.03150	1.00	.03937

J901N-10

Fig. 6 METRIC CONVERSION CHART

TORQUE REFERENCES

DESCRIPTION

Individual Torque Charts appear within many or the Groups. Refer to the Standard Torque Specifications Chart for torque references not listed in the individual torque charts (Fig. 7).

SPECIFIED TORQUE FOR STANDARD BOLTS

Class	Diameter mm	Pitch mm	Specified torque					
			Hexagon head bolt			Hexagon flange bolt		
			N•m	kgf-cm	ft-lbf	N•m	kgf-cm	ft-lbf
4T	6	1	5	55	48 in.-lbf	6	60	52 in.-lbf
	8	1.25	12.5	130	9	14	145	10
	10	1.25	26	260	19	29	290	21
	12	1.25	47	480	35	53	540	39
	14	1.5	74	760	55	84	850	61
	16	1.5	115	1,150	83	—	—	—
5T	6	1	6.5	65	56 in.-lbf	7.5	75	65 in.-lbf
	8	1.25	15.5	160	12	17.5	175	13
	10	1.25	32	330	24	36	360	26
	12	1.25	59	600	43	65	670	48
	14	1.5	91	930	67	100	1,050	76
	16	1.5	140	1,400	101	—	—	—
6T	6	1	8	80	69 in.-lbf	9	90	78 in.-lbf
	8	1.25	19	195	14	21	210	15
	10	1.25	39	400	29	44	440	32
	12	1.25	71	730	53	80	810	59
	14	1.5	110	1,100	80	125	1,250	90
	16	1.5	170	1,750	127	—	—	—
7T	6	1	10.5	110	8	12	120	9
	8	1.25	25	260	19	28	290	21
	10	1.25	52	530	38	58	590	43
	12	1.25	95	970	70	105	1,050	76
	14	1.5	145	1,500	108	165	1,700	123
	16	1.5	230	2,300	166	—	—	—
8T	8	1.25	29	300	22	33	330	24
	10	1.25	61	620	45	68	690	50
	12	1.25	110	1,100	80	120	1,250	90
9T	8	1.25	34	340	25	37	380	27
	10	1.25	70	710	51	78	790	57
	12	1.25	125	1,300	94	140	1,450	105
10T	8	1.25	38	390	28	42	430	31
	10	1.25	78	800	58	88	890	64
	12	1.25	140	1,450	105	155	1,600	116
11T	8	1.25	42	430	31	47	480	35
	10	1.25	87	890	64	97	990	72
	12	1.25	155	1,600	116	175	1,800	130

Fig. 7 TORQUE SPECIFICATIONS

VEHICLE IDENTIFICATION NUMBER

DESCRIPTION - VEHICLE IDENTIFICATION NUMBER

The Vehicle Identification Number (VIN) is located on the upper left corner of the instrument panel, near the left A-Pillar. The VIN consists of 17 characters in a combination of letters and numbers that provide specific information about the vehicle (Fig. 8). Refer to VIN Code Decoding Chart.

To protect the consumer from theft and possible fraud the manufacturer is required to include a Check Digit at the ninth position of the Vehicle Identification Number. The check digit is used by the manufacturer and government agencies to verify the authenticity of the vehicle and official documentation. The formula to use the check digit is not released to the general public.

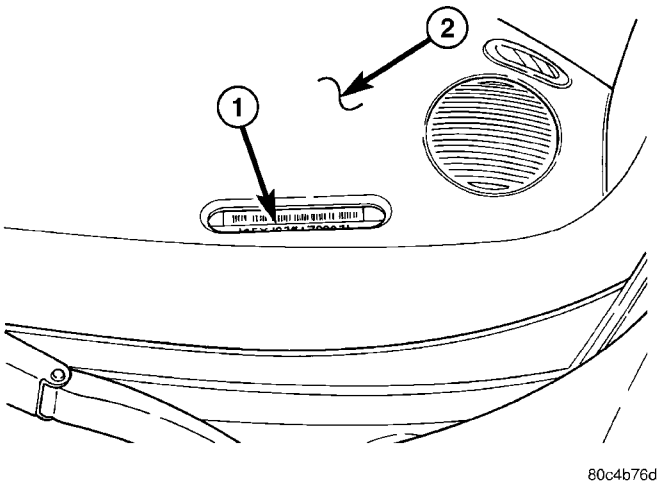

Fig. 8 VEHICLE IDENTIFICATION NUMBER LOCATION

1 - Vehicle Identification Number (VIN)
2 - Instrument Panel

VIN CODE DECODING

POSITION	INTERPRETATION	CODE = DESCRIPTION
1	Country of Origin	1 = Built in United States by DiamlerChrysler 3 = Built in Mexico by DiamlerChrysler De Mexico
2	Make	C = Chrysler
3	Vehicle Type	4 = Multi-purpose Passenger Vehicle Less Side Air Bags 8 = Multi-purpose Passenger Vehicle with Side Air Bags
4	Other	F = 1815 - 2267 KG (4000 - 5000 lbs.)
5	Line	Y = Cruiser (LHD)
5 - Export	Line	E = Cruiser (LHD) Z = Cruiser (RHD)
6	Series	4 = High Line 5 = Premium 6 = Sport X = Special
6 - Export	Transmission	B = 4-Speed Automatic N = 5-Speed Manual
7	Body Style	8 = Hatchback
8	Engine	9 = 2.0L 4 Cyl. Gasoline DOHC (MPI) B = 2.4 L 4 Cyl. 16 Valve Gasoline DOHC G = 2.4 L 4 Cyl. 16 Valve Gasoline DOHC H.O.
8 - Export	Engine	F = 1.6L 4 Cyl. 16V Gasoline SOHC 9 = 2.0L 4 Cyl. Gasoline DOHC (MPI) U = 2.2L 4 Cyl. Turbo Diesel Engine (MPI)
9	Check Digit	See explanation in this section.
10	Model Year	3 = 2003
11	Assembly Plant	T = Toluca Assembly U = Graz Assembly
12 Though 17	Vehicle Build Sequence	6 digit number assigned by assembly plant.

VEHICLE SAFETY CERTIFICATION LABEL

DESCRIPTION

A vehicle safety certification label is attached to the rear shutface of the driver's door (Fig. 9). This label indicates date of manufacture (month and year), Gross Vehicle Weight Rating (GVWR), Gross Axle Weight Rating (GAWR) front, Gross Axle Weight Rating (GAWR) rear and the Vehicle Identification Number (VIN). The Month, Day and Hour of manufacture is also included.

All communications or inquiries regarding the vehicle should include the Month-Day-Hour and Vehicle Identification Number.

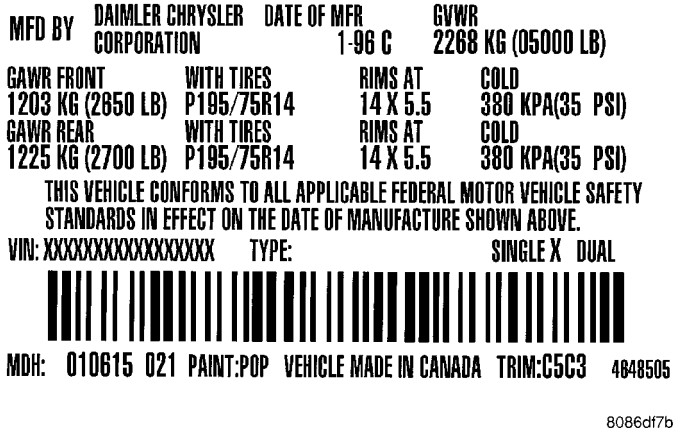

Fig. 9 VEHICLE SAFETY CERTIFICATION LABEL - TYPICAL

E-MARK LABEL

DESCRIPTION

An E-mark Label (Fig. 10) is located on the rear shut face of the driver's door. The label contains the following information:

- Date of Manufacture
- Month-Day-Hour (MDH)
- Vehicle Identification Number (VIN)
- Country Codes
- Regulation Number
- Regulation Amendment Number
- Approval Number

VECI LABEL

DESCRIPTION

All models have a Vehicle Emission Control Information (VECI) Label. Chrysler permanently attaches

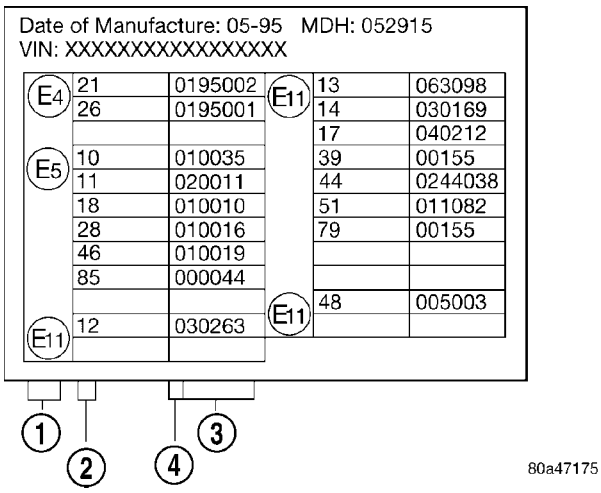

Fig. 10 E-MARK LABEL

1 - COUNTRY CODE
2 - REGULATION NUMBER
3 - APPROVAL NUMBER
4 - AMENDMENT NUMBER

the label in the engine compartment. It cannot be removed without defacing information and destroying the label.

The label contains the vehicle's emission specifications and vacuum hose routings. All hoses must be connected and routed according to the label.

MANUFACTURER PLATE

DESCRIPTION

The Manufacturer Plate (Fig. 11) is located in the engine compartment on the passenger side rear corner of the hood. The plate contains five lines of information:

1. Vehicle Identification Number (VIN)
2. Gross Vehicle Mass (GVM)
3. Gross Train Mass (GTM)
4. Gross Front Axle Rating (GFAR)
5. Gross Rear Axle Rating (GRAR)

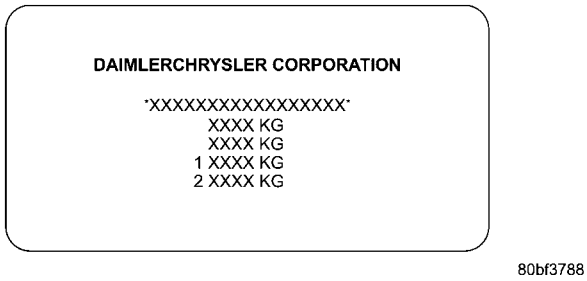

Fig. 11 MANUFACTURER PLATE

LUBRICATION & MAINTENANCE

TABLE OF CONTENTS

	page
INTERNATIONAL SYMBOLS	
DESCRIPTION	1
FLUID TYPES	
DESCRIPTION	
DESCRIPTION - ENGINE OIL AND LUBRICANTS	1
DESCRIPTION - ENGINE COOLANT	3
DESCRIPTION - TRANSMISSION FLUID	3
DESCRIPTION - FUEL REQUIREMENTS	3
FLUID CAPACITIES	
SPECIFICATIONS - FLUID CAPACITIES	5
FLUID FILL/CHECK LOCATIONS	
DESCRIPTION	5
LUBRICATION POINTS	
DESCRIPTION	5
MAINTENANCE SCHEDULES	
DESCRIPTION	5
HOISTING	
STANDARD PROCEDURE - HOISTING	14
JUMP STARTING	
STANDARD PROCEDURE - JUMP STARTING	14
TOWING	
STANDARD PROCEDURE - TOWING	15

INTERNATIONAL SYMBOLS

DESCRIPTION

DaimlerChrysler Corporation uses international symbols to identify engine compartment lubricant and fluid inspection and fill locations (Fig. 1).

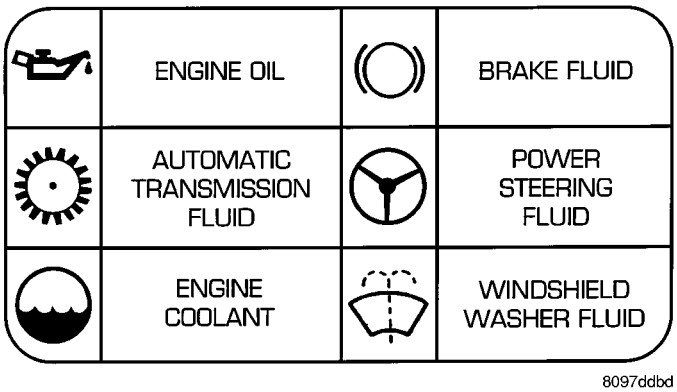

Fig. 1 INTERNATIONAL SYMBOLS

FLUID TYPES

DESCRIPTION

DESCRIPTION - ENGINE OIL AND LUBRICANTS

WARNING: NEW OR USED ENGINE OIL CAN BE IRRITATING TO THE SKIN. AVOID PROLONGED OR REPEATED SKIN CONTACT WITH ENGINE OIL. CONTAMINANTS IN USED ENGINE OIL, CAUSED BY INTERNAL COMBUSTION, CAN BE HAZARDOUS TO YOUR HEALTH. THOROUGHLY WASH EXPOSED SKIN WITH SOAP AND WATER. DO NOT WASH SKIN WITH GASOLINE, DIESEL FUEL, THINNER, OR SOLVENTS, HEALTH PROBLEMS CAN RESULT. DO NOT POLLUTE, DISPOSE OF USED ENGINE OIL PROPERLY. CONTACT YOUR DEALER OR GOVERNMENT AGENCY FOR LOCATION OF COLLECTION CENTER IN YOUR AREA.

When service is required, DaimlerChrysler Corporation recommends that only Mopar® brand parts, lubricants and chemicals be used. Mopar® provides the best engineered products for servicing DaimlerChrysler Corporation vehicles.

Only lubricants bearing designations defined by the following organization should be used.

- Society of Automotive Engineers (SAE)
- American Petroleum Institute (API)
- National Lubricating Grease Institute (NLGI)

API SERVICE GRADE CERTIFIED

Use an engine oil that is API Certified (GF-3). MOPAR® provides engine oils, meeting Material Standard MS-6395, that meet or exceed this requirement.

FLUID TYPES (Continued)

SAE VISCOSITY

An SAE viscosity grade is used to specify the viscosity of engine oil. Use only engine oils with multiple viscosities such as 5W-30 or 10W-30. These are specified with a dual SAE viscosity grade which indicates the cold-to-hot temperature viscosity range. Select an engine oil that is best suited to your particular temperature range and variation (Fig. 2).

- **SAE 5W-30** engine oil is preferred. SAE 5W-30 engine oils improve low temperature starting and helps vehicle fuel economy.

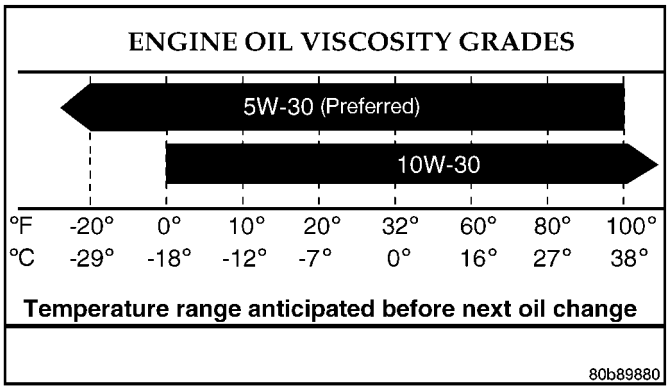

Fig. 2 TEMPERATURE/ENGINE OIL VISCOSITY

ENERGY CONSERVING OIL

An Energy Conserving type oil is recommended for gasoline engines. The designation of ENERGY CONSERVING is located on the label of an engine oil container.

CONTAINER IDENTIFICATION

Standard engine oil identification notations have been adopted to aid in the proper selection of engine oil. The identifying notations are located on the front label of engine oil plastic bottles and the top of engine oil cans (Fig. 3).

This symbol means that the oil has been certified by the American Petroleum Institute (API). DiamlerChrysler only recommends API Certified (GF-3) engine oils that meet the requirements of Material Standard MS-6395. Use Mopar or an equivalent oil meeting the specification MS-6395.

9400-9

Fig. 3 API SYMBOL

SYNTHETIC ENGINE OILS

There are a number of engine oils being promoted as either synthetic or semi-synthetic. If you chose to use such a product, use **only** those oils that meet the American Petroleum Institute (API) and SAE viscosity standard. Follow the service schedule that describes your driving type.

MATERIALS ADDED TO ENGINE OIL

The manufacturer **does not recommend** the addition of any additive to the specified engine oil.

GEAR LUBRICANTS

SAE ratings also apply to multigrade gear lubricants. In addition, API classification defines the lubricants usage. Such as API GL-5 and SAE 75W-90.

LUBRICANTS AND GREASES

Lubricating grease is rated for quality and usage by the NLGI. All approved products have the NLGI symbol (Fig. 4) on the label. At the bottom NLGI symbol is the usage and quality identification letters. Wheel bearing lubricant is identified by the letter “G”. Chassis lubricant is identified by the latter “L”. The letter following the usage letter indicates the quality of the lubricant. The following symbols indicate the highest quality.

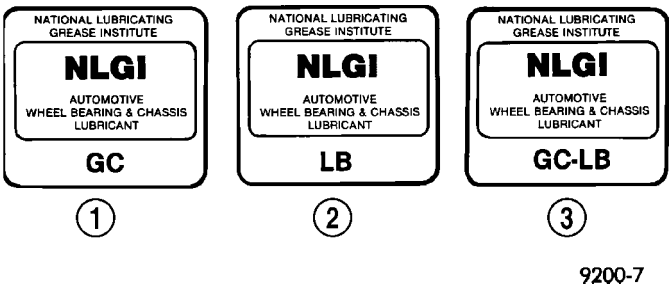

Fig. 4 NLGI SYMBOL

1 - WHEEL BEARINGS
2 - CHASSIS LUBRICATION
3 - CHASSIS AND WHEEL BEARINGS

SPECIALIZED LUBRICANTS AND OILS

Some maintenance or repair procedures may require the use of specialized lubricants or oils. Consult the appropriate sections in this manual for the correct application of these lubricants.

FLUID TYPES (Continued)

DESCRIPTION - ENGINE COOLANT

WARNING: ANTIFREEZE IS AN ETHYLENE GLYCOL BASE COOLANT AND IS HARMFUL IF SWALLOWED OR INHALED. IF SWALLOWED, DRINK TWO GLASSES OF WATER AND INDUCE VOMITING. IF INHALED, MOVE TO FRESH AIR AREA. SEEK MEDICAL ATTENTION IMMEDIATELY. DO NOT STORE IN OPEN OR UNMARKED CONTAINERS. WASH SKIN AND CLOTHING THOROUGHLY AFTER COMING IN CONTACT WITH ETHYLENE GLYCOL. KEEP OUT OF REACH OF CHILDREN. DISPOSE OF GLYCOL BASE COOLANT PROPERLY, CONTACT YOUR DEALER OR GOVERNMENT AGENCY FOR LOCATION OF COLLECTION CENTER IN YOUR AREA. DO NOT OPEN A COOLING SYSTEM WHEN THE ENGINE IS AT OPERATING TEMPERATURE OR HOT UNDER PRESSURE, PERSONAL INJURY CAN RESULT. AVOID RADIATOR COOLING FAN WHEN ENGINE COMPARTMENT RELATED SERVICE IS PERFORMED, PERSONAL INJURY CAN RESULT.

CAUTION: Use of Propylene Glycol based coolants is not recommended, as they provide less freeze protection and less boiling protection.

The cooling system is designed around the coolant. The coolant must accept heat from engine metal, in the cylinder head area near the exhaust valves and engine block. Then coolant carries the heat to the radiator where the tube/fin radiator can transfer the heat to the air.

The use of aluminum cylinder blocks, cylinder heads, and water pumps requires special corrosion protection. Mopar® Antifreeze/Coolant, 5 Year/100,000 Mile Formula (MS-9769), or the equivalent ethylene glycol base coolant with hybrid organic corrosion inhibitors (called HOAT, for Hybrid Organic Additive Technology) is recommended. This coolant offers the best engine cooling without corrosion when mixed with 50% Ethylene Glycol and 50% distilled water to obtain a freeze point of -37°C (-35°F). If it loses color or becomes contaminated, drain, flush, and replace with fresh properly mixed coolant solution.

The green coolant **MUST NOT BE MIXED** with the orange or magenta coolants. When replacing coolant the complete system flush must be performed before using the replacement coolant.

CAUTION: Mopar® Antifreeze/Coolant, 5 Year/100,000 Mile Formula (MS-9769) may not be mixed with any other type of antifreeze. Doing so will reduce the corrosion protection and may result in premature water pump seal failure. If non-HOAT coolant is introduced into the cooling system in an emergency, it should be replaced with the specified coolant as soon as possible.

DESCRIPTION - TRANSMISSION FLUID

NOTE: Refer to the maintenance schedules in the Owner's Manual for the recommended maintenance (fluid/filter change) intervals for this transaxle.

NOTE: All transaxles have a common transmission and differential sump. Filling the transaxle accommodates the differential as well.

TRANSMISSION FLUID

Mopar® ATF+4 (Automatic Transmission Fluid-Type 9602) is required in the 41TE automatic. Substitute fluids can induce torque converter clutch shudder.

Mopar® ATF+4 (Automatic Transmission Fluid-Type 9602) when new is red in color. The ATF is dyed red so it can be identified from other fluids used in the vehicle such as engine oil or antifreeze. The red color is not permanent and is not an indicator of fluid condition. As the vehicle is driven, the ATF will begin to look darker in color and may eventually become brown. **This is normal.** A dark brown/black fluid accompanied with a burnt odor and/or deterioration in shift quality may indicate fluid deterioration or transmission component failure.

G288 and T350 Manual transaxles require the use of Mopar® ATF+4 (Automatic Transmission Fluid)

FLUID ADDITIVES

DaimlerChrysler strongly recommends against the addition of any fluids to the transmission, other than those automatic transmission fluids listed above. Exceptions to this policy are the use of special dyes to aid in detecting fluid leaks.

Various "special" additives and supplements exist that claim to improve shift feel and/or quality. These additives and others also claim to improve converter clutch operation and inhibit overheating, oxidation, varnish, and sludge. These claims have not been supported to the satisfaction of DaimlerChrysler and these additives **must not be used.** The use of transmission "sealers" should also be avoided, since they may adversely affect the integrity of transmission seals.

DESCRIPTION - FUEL REQUIREMENTS

Your engine is designed to meet all emissions regulations and provide excellent fuel economy and performance when using high quality unleaded gasoline having an octane rating of 87. The use of premium gasoline is not recommended. The use of premium

FLUID TYPES (Continued)

gasoline will provide no benefit over high quality regular gasoline, and in some circumstances may result in poorer performance.

Light spark knock at low engine speeds is not harmful to your engine. However, continued heavy spark knock at high speeds can cause damage and immediate service is required. Engine damage resulting from operation with a heavy spark knock may not be covered by the new vehicle warranty.

Poor quality gasoline can cause problems such as hard starting, stalling and hesitations. If you experience these symptoms, try another brand of gasoline before considering service for the vehicle.

Over 40 auto manufacturers world-wide have issued and endorsed consistent gasoline specifications (the Worldwide Fuel Charter, WWFC) to define fuel properties necessary to deliver enhanced emissions, performance and durability for your vehicle. We recommend the use of gasolines that meet the WWFC specifications if they are available.

REFORMULATED GASOLINE

Many areas of the country require the use of cleaner burning gasoline referred to as "reformulated" gasoline. Reformulated gasoline contain oxygenates, and are specifically blended to reduce vehicle emissions and improve air quality.

We strongly support the use of reformulated gasoline. Properly blended reformulated gasoline will provide excellent performance and durability for the engine and fuel system components.

GASOLINE/OXYGENATE BLENDS

Some fuel suppliers blend unleaded gasoline with oxygenates such as 10% ethanol, MTBE, and ETBE. Oxygenates are required in some areas of the country during the winter months to reduce carbon monoxide emissions. Fuels blended with these oxygenates may be used in your vehicle.

CAUTION: DO NOT use gasoline containing METHANOL. Gasoline containing methanol may damage critical fuel system components.

MMT IN GASOLINE

MMT is a manganese-containing metallic additive that is blended into some gasoline to increase octane. Gasoline blended with MMT provide no performance advantage beyond gasoline of the same octane number without MMT. Gasoline blended with MMT reduce spark plug life and reduce emission system performance in some vehicles. We recommend that gasoline free of MMT be used in your vehicle. The MMT content of gasoline may not be indicated on the gasoline pump; therefore, you should ask your gasoline retailer whether or not his/her gasoline contains MMT.

It is even more important to look for gasoline without MMT in Canada because MMT can be used at levels higher than allowed in the United States. MMT is prohibited in Federal and California reformulated gasoline.

SULFUR IN GASOLINE

If you live in the northeast United States, your vehicle may have been designed to meet California low emission standards with Cleaner-Burning California reformulated gasoline with low sulfur. If such fuels are not available in states adopting California emission standards, your vehicles will operate satisfactorily on fuels meeting federal specifications, but emission control system performance may be adversely affected. Gasoline sold outside of California is permitted to have higher sulfur levels which may affect the performance of the vehicle's catalytic converter. This may cause the Malfunction Indicator Lamp (MIL), Check Engine or Service Engine Soon light to illuminate. We recommend that you try a different brand of unleaded gasoline having lower sulfur to determine if the problem is fuel related prior to returning your vehicle to an authorized dealer for service.

CAUTION: If the Malfunction Indicator Lamp (MIL), Check Engine or Service Engine Soon light is flashing, immediate service is required; see on-board diagnostics system section.

MATERIALS ADDED TO FUEL

All gasoline sold in the United States and Canada are required to contain effective detergent additives. Use of additional detergents or other additives is not needed under normal conditions.

FUEL SYSTEM CAUTIONS

CAUTION: Follow these guidelines to maintain your vehicle's performance:

- The use of leaded gas is prohibited by Federal law. Using leaded gasoline can impair engine performance, damage the emission control system, and could result in loss of warranty coverage.
- An out-of-tune engine, or certain fuel or ignition malfunctions, can cause the catalytic converter to overheat. If you notice a pungent burning odor or some light smoke, your engine may be out of tune or malfunctioning and may require immediate service. Contact your dealer for service assistance.
- When pulling a heavy load or driving a fully loaded vehicle when the humidity is low and the tem-

FLUID TYPES (Continued)

perature is high, use a premium unleaded fuel to help prevent spark knock. If spark knock persists, lighten the load, or engine piston damage may result.

- The use of fuel additives which are now being sold as octane enhancers is not recommended. Most of these products contain high concentrations of methanol. Fuel system damage or vehicle performance problems resulting from the use of such fuels or additives is not the responsibility of DaimlerChrysler Corporation and may not be covered under the new vehicle warranty.

NOTE: Intentional tampering with emissions control systems can result in civil penalties being assessed against you.

FLUID CAPACITIES

SPECIFICATIONS - FLUID CAPACITIES

DESCRIPTION	SPECIFICATION
Fuel Tank	57L (15 gal.)
Engine Oil* - 1.6L	4.3L (4.5 qts.)
Engine Oil* - 2.0L	4.3L (4.5 qts.)
Engine Oil* - 2.2L Diesel	7.0L (7.4 qts.)
Engine Oil* - 2.4L	4.8L (5.0 qts.)
Cooling System** - 1.6L, 2.0L, and 2.4L	6.2L (6.5 qts.)
Cooling System** - 2.2L Diesel	9.0L (9.5 qts.)
Automatic Transaxle - Estimated Service Fill	3.8L (4.0 qts.)
Automatic Transaxle - Overhaul Fill Capacity with Torque Converter Empty	8.1L (8.6 qts.)
Manual Transaxle - NV T350	2.4 - 2.7L (2.5 - 2.8 qts.)
Manual Transaxle - Getrag 288	2.2L Turbo Diesel: 2.0L (2.1 qts.)
	2.4L Turbo: 1.8L (1.9 qts.)
*(includes new filter)	
**(Includes heater and coolant recovery bottle filled to MAX level.)	

FLUID FILL/CHECK LOCATIONS

DESCRIPTION

The fluid check/fill point locations are located in each applicable service manual section.

LUBRICATION POINTS

DESCRIPTION

Lubrication point locations are located in each applicable Sections.

MAINTENANCE SCHEDULES

DESCRIPTION

Maintenance Schedule Information not included in this section, is located in the appropriate Owner's Manual.

There are three maintenance schedules that show **required** service for your vehicle.

First is Schedule **"B"—ALL ENGINES**. It is for vehicles that are operated under the conditions that are listed below and at the beginning of the schedule.

- Day or night temperatures are below 0° C (32° F).
- Stop and go driving.
- Extensive engine idling.
- Driving in dusty conditions.
- Short trips of less than 16 km (10 miles).
- More than 50% of your driving is at sustained high speeds during hot weather, above 32° C (90° F).†
- Trailer towing.†◊
- Taxi, police, or delivery service (commercial service).†◊
- Off-road or desert operation.
- **If equipped for and operating with E-85 (ethanol) fuel.**

NOTE: Most vehicles are operated under the conditions listed for Schedule ″B″.

Second is Schedule **"A"—NON TURBO CHARGED ENGINES**. It is for vehicles that are not operated under any of the conditions listed under Schedule ″B″—ALL ENGINES.

Second is Schedule **"A"—TURBO CHARGED ENGINES**. It is for vehicles that are not operated under any of the conditions listed under Schedule ″B″—ALL ENGINES.

Use the schedule that best describes your driving conditions. Where time and mileage are listed, follow the interval that occurs first.

MAINTENANCE SCHEDULES (Continued)

CAUTION: Failure to perform the required maintenance items may result in damage to the vehicle.

At Each Stop for Fuel

- Check the engine oil level about 5 minutes after a fully warmed engine is shut off. Checking the oil level while the vehicle is on level ground will improve the accuracy of the oil level reading. Add oil only when the level is at or below the ADD or MIN mark.
- Check the windshield washer solvent and add if required.

Once a Month

- Check tire pressure and look for unusual wear or damage.
- Inspect the battery and clean and tighten the terminals as required.
- Check the fluid levels of coolant reservoir, brake master cylinder, power steering and transaxle and add as needed.
- Check all lights and all other electrical items for correct operation.
- Check rubber seals on each side of the radiator for proper fit.

At Each Oil Change

- Change the engine oil filter.
- Inspect the exhaust system.
- Inspect the brake hoses.
- Inspect the CV joints and front suspension components.
- Check the automatic transaxle fluid level.
- Check the manual transaxle fluid level and fill plug condition.
- Check the coolant level, hoses, and clamps.
- Rotate the tires at each oil change interval shown on Schedule “A”—NON TURBO CHARGED ENGINES 10 000 km (6,000 miles), Schedule “A”—TURBO CHARGED ENGINES 8 000 km (5,000 miles), or every other interval shown on Schedule “B”—ALL ENGINES 10 000 km (6,000 miles).

SCHEDULE “B”—ALL ENGINES

Follow schedule “B”—All Engines if you usually operate your vehicle under one or more of the following conditions. Change the automatic transmission fluid and filter every 77 000 km (48,000 miles) if the vehicle is usually operated under one or more of the conditions marked with an ◊.

Change the manual transaxle fluid every 77 000 km (48,000 miles) if the vehicle is usually operated under one or more of the conditions marked with an †.

- Day or night temperatures are below 0° C (32° F).
- Stop and go driving.
- Extensive engine idling.
- Driving in dusty conditions.
- Short trips of less than 16.2 km (10 miles).
- More than 50% of your driving is at sustained high speeds during hot weather, above 32° C (90° F).†
- Trailer towing.†◊
- Taxi, police, or delivery service (commercial service).†◊
- Off-road or desert operation.
- **If equipped for and operating with E-85 (ethanol) fuel.**

Miles (Kilometers)	**3,000 (5 000)**	**6,000 (10 000)**	**9,000 (14 000)**	**12,000 (19 000)**	**15,000 (24 000)**	**18,000 (29 000)**
Change engine oil and engine oil filter.	X	X	X	X	X	X
Inspect the brake linings.				X		
Inspect the **engine air cleaner filter.** Replace as necessary.*					X	
Inspect the **PCV make-up air filter.** Replace as necessary.					X	
Inspect the generator belt, and replace as necessary.					X	
Inspect and adjust the power steering pump belt tension.					X	

MAINTENANCE SCHEDULES (Continued)

Miles (Kilometers)	**21,000 (34 000)**	**24,000 (38 000)**	**27,000 (43 000)**	**30,000 (48 000)**	**33,000 (53 000)**	**36,000 (58 000)**
Change engine oil and engine oil filter.	X	X	X	X	X	X
Inspect the brake linings.		X				X
Replace the **engine air cleaner filter.**				X		
Replace the **spark plugs.**				X		
Inspect the tie rod ends and boot seals.				X		
Inspect the **PCV valve** and replace as necessary.*				X		
Replace the **PCV make-up air filter.**				X		
Inspect and adjust the power steering pump belt tension.				X		
Inspect the generator belt, and replace as necessary.				X		

Miles (Kilometers)	**39,000 (62 000)**	**42,000 (67 000)**	**45,000 (72 000)**	**48,000 (77 000)**	**51,000 (82 000)**	**54,000 (86 000)**
Change engine oil and engine oil filter.	X	X	X	X	X	X
Inspect the brake linings.				X		
Change the brake fluid. If vehicle is used for trailer towing.				X		
Inspect the **engine air cleaner filter.** Replace as necessary.*			X			
Change the automatic transaxle fluid and filter.				X		
Change the manual transaxle fluid.				X		
Inspect the **PCV make-up air filter.** Replace as necessary.			X			
Inspect and adjust the power steering pump belt tension.			X			
Inspect the generator belt, and replace as necessary.			X			

MAINTENANCE SCHEDULES (Continued)

Miles (Kilometers)	**57,000 (91 000)**	**60,000 (96 000)**	**63,000 (101 000)**	**66,000 (106 000)**	**69,000 (110 000)**	**72,000 (115 000)**
Change engine oil and engine oil filter.	X	X	X	X	X	X
Inspect the brake linings.		X				X
Replace the **engine air cleaner filter.**		X				
Replace the **spark plugs and ignition cables.**		X				
Inspect the tie rod ends and boot seals.		X				
Inspect the **PCV valve** and replace if necessary. Not required if previously changed. * ‡		X				
Inspect the **PCV make-up air filter.** Replace as necessary.		X				
Inspect and adjust the power steering pump belt tension.		X				
Inspect the generator belt, and replace as necessary.		X				

Miles (Kilometers)	**75,000 (120 000)**	**78,000 (125 000)**	**81,000 (130 000)**	**84,000 (134 000)**	**87,000 (139 000)**	**90,000 (144 000)**
Change engine oil and engine oil filter.	X	X	X	X	X	X
Inspect the brake linings.				X		
Inspect the **engine air cleaner filter** and replace as necessary.*	X					
Replace the **engine air cleaner filter.**						X
Replace the **spark plugs.**						X
Inspect the tie rod ends and boot seals.						X
Inspect the **PCV valve** and replace if necessary. Not required if previously changed. * ‡						X
Replace the **engine timing belt.***						X
Inspect the **PCV make-up air filter.** Replace as necessary.	X					X
Inspect and adjust the power steering pump belt tension.	X					X
Inspect the generator belt, and replace as necessary.	X					X

MAINTENANCE SCHEDULES (Continued)

Miles (Kilometers)	**93,000 (149 000)**	**96,000 (154 000)**	**99,000 (158 000)**	**100,000 (160 000)**	**102,000 (163 000)**	**105,000 (168 000)**
Change engine oil and engine oil filter.	X	X	X		X	X
Inspect the brake linings.		X				
Change the brake fluid. If vehicle is used for trailer towing.		X				
Inspect the **engine air cleaner filter** and replace as necessary.*						X
Change the automatic transaxle fluid and filter.		X				
Change the manual transaxle fluid.		X				
Flush and replace the engine coolant at 60 months or 100,000 miles.				X		
Inspect the **PCV make-up air filter.** Replace as necessary.						X
Inspect and adjust the power steering pump belt tension.						X
Inspect the generator belt, and replace as necessary.						X

* This maintenance is recommended by the manufacturer to the owner but is not required to maintain the emissions warranty.

‡ This maintenance is not required if previously replaced.

Inspection and service should also be performed anytime a malfunction is observed or suspected. Retain all receipts.

MAINTENANCE SCHEDULES (Continued)

SCHEDULE "A"—NON TURBO CHARGED ENGINES

Miles **(Kilometers)** **[Months]**	**6,000** **(10 000)** **[6]**	**12,000** **(19 000)** **[12]**	**18,000** **(29 000)** **[18]**	**24,000** **(38 000)** **[24]**	**30,000** **(48 000)** **[30]**	**36,000** **(58 000)** **[36]**
Change engine oil and engine oil filter.	X	X	X	X	X	X
Inspect the brake linings.			X			X
Replace the **engine air cleaner filter.**					X	
Replace the **spark plugs.**					X	
Inspect the tie rod ends and boot seals.					X	
Replace the **PCV make-up air filter.**					X	
Adjust generator drive belt tension					X	

Miles **(Kilometers)** **[Months]**	**42,000** **(67 000)** **[42]**	**48,000** **(77 000)** **[48]**	**54,000** **(86 000)** **[54]**	**60,000** **(96 000)** **[60]**	**66,000** **(106 000)** **[66]**
Change engine oil and engine oil filter.	X	X	X	X	X
Inspect the brake linings.			X		
Replace the **engine air cleaner filter.**				X	
Replace the **spark plugs and ignition cables.**				X	
Inspect the tie rod ends and boot seals.				X	
Inspect the **PCV valve and replace, if necessary.***				X	
Flush and replace the engine coolant at 60 months, regardless of mileage.				X	
Replace the **PCV make-up air filter.**				X	
Adjust generator drive belt tension.				X	

MAINTENANCE SCHEDULES (Continued)

Miles **(Kilometers)** **[Months]**	**72,000** **(115 000)** **[72]**	**78,000** **(125 000)** **[78]**	**84,000** **(134 000)** **[84]**	**90,000** **(144 000)** **[90]**	**96,000** **(154 000)** **[96]**	**102,000** **(163 000)** **[102]**
Change engine oil and engine oil filter.	X	X	X	X	X	
Inspect the brake linings.	X			X		
Replace the **engine air cleaner filter.**				X		
Replace the **spark plugs.**				X		
Inspect the tie rod ends and boot seals.				X		
Inspect the **PCV valve and replace if necessary. Not required if previously changed. * ‡**				X		
Replace the **PCV make-up air filter.**				X		
Replace power steering belt if necessary.				X		
Adjust or replace, if necessary, generator drive belt.				X		
Flush and replace the engine coolant if not done at 60 months.						X
Replace **engine timing belt.**						X

* This maintenance is recommended by the manufacturer to the owner but is not required to maintain the emissions warranty.

‡ This maintenance is not required if previously replaced.

Inspection and service should also be performed anytime a malfunction is observed or suspected. Retain all receipts.

MAINTENANCE SCHEDULES (Continued)

SCHEDULE "A"—2.4L TURBO CHARGED ENGINES

Miles **(Kilometers)** **[Months]**	**5,000** **(8 000)** **[6]**	**10,000** **(16 000)**	**15,000** **(24 000)** **[12]**	**20,000** **(32 000)** **[18]**	**25,000** **(40 000)**	**30,000** **(48 000)** **[24]**
Change engine oil and engine oil filter.	X	X	X	X	X	X
Inspect the brake linings.				X		
Replace the **engine air cleaner filter.**						X
Replace the **spark plugs.**						X
Inspect the tie rod ends and boot seals.						X
Replace the **PCV make-up air filter.**						X
Adjust the generator drive belt tension.						X

Miles **(Kilometers)** **[Months]**	**35,000** **(56 000)** **[30]**	**40,000** **(64 000)**	**45,000** **(72 000)** **[36]**	**50,000** **(80 000)** **[42]**	**55,000** **(88 000)**
Change engine oil and engine oil filter.	X	X	X	X	X
Inspect the brake linings.		X			

Miles **(Kilometers)** **[Months]**	**60,000** **(96 000)** **[48]**	**65,000** **(104 000)** **[54]**	**70,000** **(112 000)**	**75,000** **(120 000)** **[60]**	**80,000** **(128 000)** **[66]**	**85,000** **(136 000)**
Change engine oil and engine oil filter.	X	X	X	X	X	X
Inspect the brake linings.	X				X	
Replace the **engine air cleaner filter.**	X					
Replace the **spark plugs and ignition cables.**	X					
Inspect the tie rod ends and boot seals.	X					
Inspect the **PCV valve** and replace if necessary. Not required if previously changed. * ‡	X					
Flush and replace the engine coolant at 60 months, regardless of mileage.				X		
Replace the **PCV make-up air filter.**	X					
Adjust generator drive belt tension.	X					

MAINTENANCE SCHEDULES (Continued)

Miles **(Kilometers)** **[Months]**	**90,000** **(144 000)** **[72]**	**95,000** **(156 000)** **[78]**	**100,000** **(160 000)**	**105,000** **(168 000)** **[84]**
Change engine oil and engine oil filter.	X	X	X	X
Inspect the brake linings.			X	
Replace the **engine air cleaner filter.**	X			
Replace the **spark plugs.**	X			
Inspect engine accessory drive belts, replace if necessary. Adjust the generator drive belt tension if not replacing belt.	X			
Inspect the tie rod ends and boot seals.	X			
Inspect the **PCV valve** and replace if necessary. Not required if previously changed. * ‡	X			
Flush and replace the engine coolant if not done at 60 months.			X	
Replace the **PCV make-up air filter.**	X			
Replace the **engine timing belt.**				X

* This maintenance is recommended by the manufacturer to the owner but is not required to maintain the emissions warranty.

‡ This maintenance is not required if previously replaced.

Inspection and service should also be performed anytime a malfunction is observed or suspected. Retain all receipts.

WARNING: You can be badly injured working on or around a motor vehicle. Do only that service work for which you have the knowledge and the right equipment. If you have any doubt about your ability to perform a service job, take your vehicle to a competent mechanic.

HOISTING

STANDARD PROCEDURE - HOISTING

Refer to Owner's Manual provided with vehicle for proper emergency jacking procedures.

WARNING: THE HOISTING AND JACK LIFTING POINTS PROVIDED ARE FOR A COMPLETE VEHICLE. WHEN THE ENGINE OR REAR SUSPENSION IS REMOVED FROM A VEHICLE, THE CENTER OF GRAVITY IS ALTERED MAKING SOME HOISTING CONDITIONS UNSTABLE. PROPERLY SUPPORT OR SECURE VEHICLE TO HOISTING DEVICE WHEN THESE CONDITIONS EXIST.

CAUTION: Do not position hoisting device on suspension components, damage to vehicle can result. Do not attempt to raise one entire side of the vehicle by placing a floor jack midway between the front and rear wheels. This practice may result in permanent damage to the body.

When properly positioned, a floor jack can be used to lift the vehicle and support the raised vehicle with jack stands (Fig. 5).

A floor jack or any lifting device, must never be used on any part of the underbody other then the described areas.

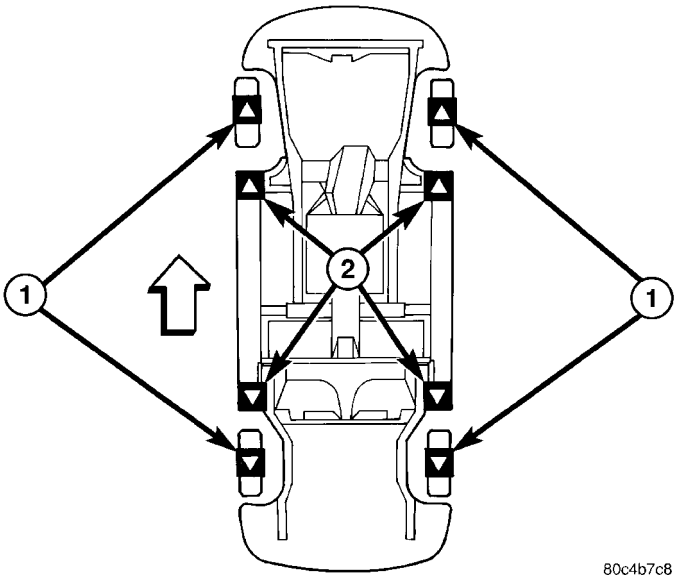

Fig. 5 Hoisting and Jacking Points

1 - DRIVE ON LIFT
2 - FRAME CONTACT LIFT (SINGLE POST)
2 - CHASSIS LIFT (DUAL POST)
2 - OUTBOARD LIFT (DUAL LIFT)
2 - FLOOR JACK

JUMP STARTING

STANDARD PROCEDURE - JUMP STARTING

WARNING: REVIEW ALL SAFETY PRECAUTIONS AND WARNINGS IN BATTERY/STARTING/CHARGING SECTIONS. DO NOT JUMP START A FROZEN BATTERY, PERSONAL INJURY CAN RESULT. DO NOT JUMP START WHEN MAINTENANCE FREE BATTERY INDICATOR DOT IS YELLOW OR BRIGHT COLOR. DO NOT JUMP START A VEHICLE WHEN THE BATTERY FLUID IS BELOW THE TOP OF LEAD PLATES. DO NOT ALLOW JUMPER CABLE CLAMPS TO TOUCH EACH OTHER WHEN CONNECTED TO A BOOSTER SOURCE. DO NOT USE OPEN FLAME NEAR BATTERY. REMOVE METALLIC JEWELRY WORN ON HANDS OR WRISTS TO AVOID INJURY BY ACCIDENTAL ARCING OF BATTERY CURRENT. WHEN USING A HIGH OUTPUT BOOSTING DEVICE, DO NOT ALLOW BATTERY VOLTAGE TO EXCEED 16 VOLTS. REFER TO INSTRUCTIONS PROVIDED WITH DEVICE BEING USED.

CAUTION: When using another vehicle as a booster, do not allow vehicles to touch. Electrical systems can be damaged on either vehicle.

TO JUMP START A DISABLED VEHICLE:

(1) Raise hood on disabled vehicle and visually inspect engine compartment for:

- Battery cable clamp condition, clean if necessary.
- Frozen battery.
- Yellow or bright color test indicator, if equipped.
- Low battery fluid level.
- Generator drive belt condition and tension.
- Fuel fumes or leakage, correct if necessary.

CAUTION: If the cause of starting problem on disabled vehicle is severe, damage to booster vehicle charging system can result.

(2) When using another vehicle as a booster source, park the booster vehicle within cable reach. Turn off all accessories, set the parking brake, place the automatic transmission in PARK or the manual transmission in NEUTRAL and turn the ignition OFF.

(3) On disabled vehicle, place gear selector in park or neutral and set park brake. Turn off all accessories.

(4) Connect jumper cables to booster battery. RED clamp to positive terminal (+) or remote terminal. BLACK clamp to negative terminal (-). DO NOT allow clamps at opposite end of cables to touch, elec-

JUMP STARTING (Continued)

trical arc will result. Review all warnings in this procedure.

(5) On disabled vehicle connect RED jumper cable clamp to positive (+) remote terminal. Connect BLACK jumper cable clamp to engine ground as close to the ground cable attaching point as possible (Fig. 6).

(a) Pull the protective sleeve from the remote positive terminal.

(b) Connect RED jumper cable clamp to positive (+) remote terminal. Connect BLACK jumper cable clamp to engine ground as close to the ground cable attaching point as possible (Fig. 6).

(6) Start the engine in the vehicle which has the booster battery, let the engine idle a few minutes, then start the engine in the vehicle with the discharged battery.

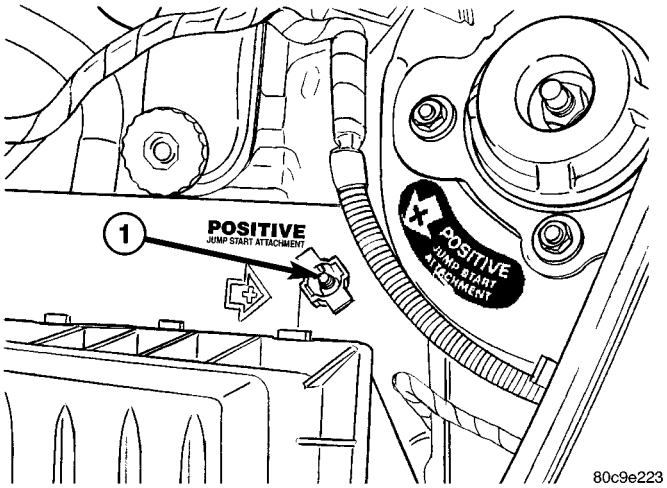

Fig. 6 POSITIVE JUMPER CABLE CLAMP CONNECTION

1 - BATTERY POSITIVE REMOTE TERMINAL

CAUTION: Do not crank starter motor on disabled vehicle for more than 15 seconds, starter will overheat and could fail.

(7) Allow battery in disabled vehicle to charge to at least 12.4 volts (75% charge) before attempting to start engine. If engine does not start within 15 seconds, stop cranking engine and allow starter to cool (15 minutes), before cranking again.

DISCONNECT CABLE CLAMPS AS FOLLOWS:

- Disconnect BLACK cable clamp from engine ground on disabled vehicle.
- Disconnect RED cable clamp from battery positive remote terminal.

TOWING

STANDARD PROCEDURE - TOWING

WARNING: DO NOT ALLOW TOWING ATTACHMENT DEVICES TO CONTACT THE FUEL TANK OR LINES, FUEL LEAK CAN RESULT. DO NOT LIFT OR TOW VEHICLE BY FRONT OR REAR BUMPER, OR BUMPER ENERGY ABSORBER UNITS. DO NOT VENTURE UNDER A LIFTED VEHICLE IF NOT SUPPORTED PROPERLY ON SAFETY STANDS. DO NOT ALLOW PASSENGERS TO RIDE IN A TOWED VEHICLE. USE A SAFETY CHAIN THAT IS INDEPENDENT FROM THE TOWING ATTACHMENT DEVICE.

CAUTION: Do not damage brake lines, exhaust system, shock absorbers, sway bars, or any other under vehicle components when attaching towing device to vehicle. Do not attach towing device to front or rear suspension components. Do not secure vehicle to towing device by the use of front or rear suspension or steering components. Remove or secure loose or protruding objects from a damaged vehicle before towing. Refer to state and local rules and regulations before towing a vehicle. Do not allow weight of towed vehicle to bear on lower fascia, air dams, or spoilers.

To avoid damage to bumper fascia and air dams use of a wheel lift or flat bed towing device (Fig. 7) is recommended. When using a wheel lift towing device, be sure the unlifted end of disabled vehicle has at least 100 mm (4 in.) ground clearance. If minimum ground clearance cannot be reached, use a towing dolly. If a flat bed device is used, the approach angle should not exceed 15 degrees.

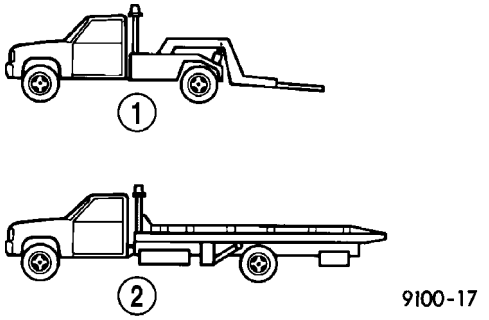

Fig. 7 Recommended Towing Devices

1 - WHEEL LIFT
2 - FLAT BED

SUSPENSION

TABLE OF CONTENTS

page

FRONT SUSPENSION 1
REAR SUSPENSION 26
WHEEL ALIGNMENT 52

FRONT SUSPENSION

TABLE OF CONTENTS

page

FRONT SUSPENSION
DESCRIPTION - FRONT SUSPENSION 2
OPERATION - FRONT SUSPENSION 2
WARNING
WARNINGS AND CAUTIONS 2
STANDARD PROCEDURE - LUBRICATION 2
SPECIFICATIONS
FRONT SUSPENSION FASTENER TORQUE . . 4
SPECIAL TOOLS
FRONT SUSPENSION 4
HUB / BEARING
DESCRIPTION 6
OPERATION 6
DIAGNOSIS AND TESTING - WHEEL
BEARING AND HUB 6
REMOVAL 6
INSTALLATION 6
KNUCKLE
DESCRIPTION - STEERING KNUCKLE 6
OPERATION - STEERING KNUCKLE 6
DIAGNOSIS AND TESTING - STEERING
KNUCKLE 6
REMOVAL - STEERING KNUCKLE 6
DISASSEMBLY - STEERING KNUCKLE
(WHEEL BEARING AND HUB) 8
ASSEMBLY - STEERING KNUCKLE (WHEEL
BEARING AND HUB) 10
INSTALLATION - STEERING KNUCKLE 11
LOWER BALL JOINT
DIAGNOSIS AND TESTING - BALL JOINT 12
LOWER BALL JOINT SEAL BOOT
REMOVAL 12
INSTALLATION 12

page

LOWER CONTROL ARM
DESCRIPTION 13
OPERATION 13
DIAGNOSIS AND TESTING - LOWER
CONTROL ARM 13
REMOVAL - LOWER CONTROL ARM 13
DISASSEMBLY
DISASSEMBLY - LOWER CONTROL ARM
(BALL JOINT) 15
DISASSEMBLY - LOWER CONTROL ARM
(REAR ISOLATOR BUSHING) 15
ASSEMBLY
ASSEMBLY - LOWER CONTROL ARM (BALL
JOINT) 16
ASSEMBLY - LOWER CONTROL ARM
(REAR ISOLATOR BUSHING) 17
INSTALLATION - LOWER CONTROL ARM 17
STABILIZER BAR
DESCRIPTION 19
OPERATION 19
REMOVAL 19
INSPECTION 19
INSTALLATION 19
STRUT ASSEMBLY
DESCRIPTION 20
OPERATION 20
DIAGNOSIS AND TESTING - STRUT
ASSEMBLY (FRONT) 20
REMOVAL 20
DISASSEMBLY 21
ASSEMBLY 24
INSTALLATION 24

FRONT SUSPENSION

DESCRIPTION - FRONT SUSPENSION

This vehicle has a gas pressurized MacPherson strut type front suspension design (Fig. 1).

The front suspension consists of these major components:

- Hub (pressed into bearing)
- Bearing (pressed into steering knuckle)
- Lower control arm (2)
- Stabilizer bar
- Steering knuckle (2)
- Strut assembly (2)

Refer to individual components for additional information.

OPERATION - FRONT SUSPENSION

The front suspension allows each front wheel on a vehicle to adapt to different road surfaces and conditions without greatly affecting the opposite wheel and the ability to control the vehicle. Each side of the front suspension is allowed to pivot so the vehicle can be steered in the direction preferred.

When a vehicle strikes a bump, the force is transferred through the hub, bearing, and knuckle, into the strut assembly to absorb the force and dampen it. During steering maneuvers, the strut assembly (through a pivot bearing in the upper strut mount) and steering knuckle (through the lower ball joint mounted on the lower control arm) turn as an assembly.

WARNING

WARNINGS AND CAUTIONS

WARNING: DUST AND DIRT ACCUMULATING ON BRAKE PARTS DURING NORMAL USE MAY CONTAIN ASBESTOS FIBERS FROM PRODUCTION OR AFTERMARKET LININGS. BREATHING EXCESSIVE CONCENTRATIONS OF ASBESTOS FIBERS CAN CAUSE SERIOUS BODILY HARM. EXERCISE CARE WHEN SERVICING BRAKE PARTS. DO NOT SAND, OR GRIND BRAKE LINING UNLESS EQUIPMENT USED IS DESIGNED TO CONTAIN THE DUST RESIDUE. DO NOT CLEAN BRAKE PARTS WITH COMPRESSED AIR OR BY DRY BRUSHING. CLEANING SHOULD BE DONE BY DAMPENING THE BRAKE COMPONENTS WITH A FINE MIST OF WATER, THEN WIPING THE BRAKE COMPONENTS CLEAN WITH A DAMPENED CLOTH. DISPOSE OF CLOTH AND ALL RESIDUE CONTAINING ASBESTOS FIBERS IN AN IMPERMEABLE CONTAINER WITH THE APPROPRIATE LABEL. FOLLOW PRACTICES PRESCRIBED BY THE OCCUPATIONAL SAFETY AND HEALTH ADMINISTRATION (OSHA) AND THE ENVIRONMENTAL PROTECTION AGENCY (EPA) FOR THE HANDLING, PROCESSING, AND DISPOSITION OF DUST OR DEBRIS THAT MAY CONTAIN ASBESTOS FIBERS.

WARNING: DO NOT REMOVE THE STRUT SHAFT NUT WHILE STRUT ASSEMBLY IS INSTALLED IN VEHICLE, OR BEFORE THE COIL SPRING IS COMPRESSED WITH A COMPRESSION TOOL. THE SPRING IS HELD UNDER HIGH PRESSURE.

CAUTION: Only frame contact hoisting equipment can be used on this vehicle. It cannot be hoisted using equipment designed to lift a vehicle by the rear axle. If this type of hoisting equipment is used, damage to rear suspension components will occur.

CAUTION: At no time when servicing a vehicle can a sheet metal screw, bolt, or other metal fastener be installed in the shock tower to take the place of an original plastic clip. It may come into contact with the strut or coil spring.

CAUTION: Wheel bearing damage will result if after loosening the hub nut, the vehicle is rolled on the ground or the weight of the vehicle is allowed to be supported by the tires for a length of time.

STANDARD PROCEDURE - LUBRICATION

There are no serviceable lubrication points on the front suspension. The front lower ball joints have grease fittings which have had the head snapped off by the manufacturer after they have been filled. This has been done to eliminate the possibility of damaging the non-vented seals. Grease will not leak from the broken grease fittings. The ball joints are sealed for life and require no maintenance.

CAUTION: No attempt should be made to replace the ball joint grease fitting with a new fitting, then filling the ball joint with grease. Damage to the grease seal can result.

FRONT SUSPENSION (Continued)

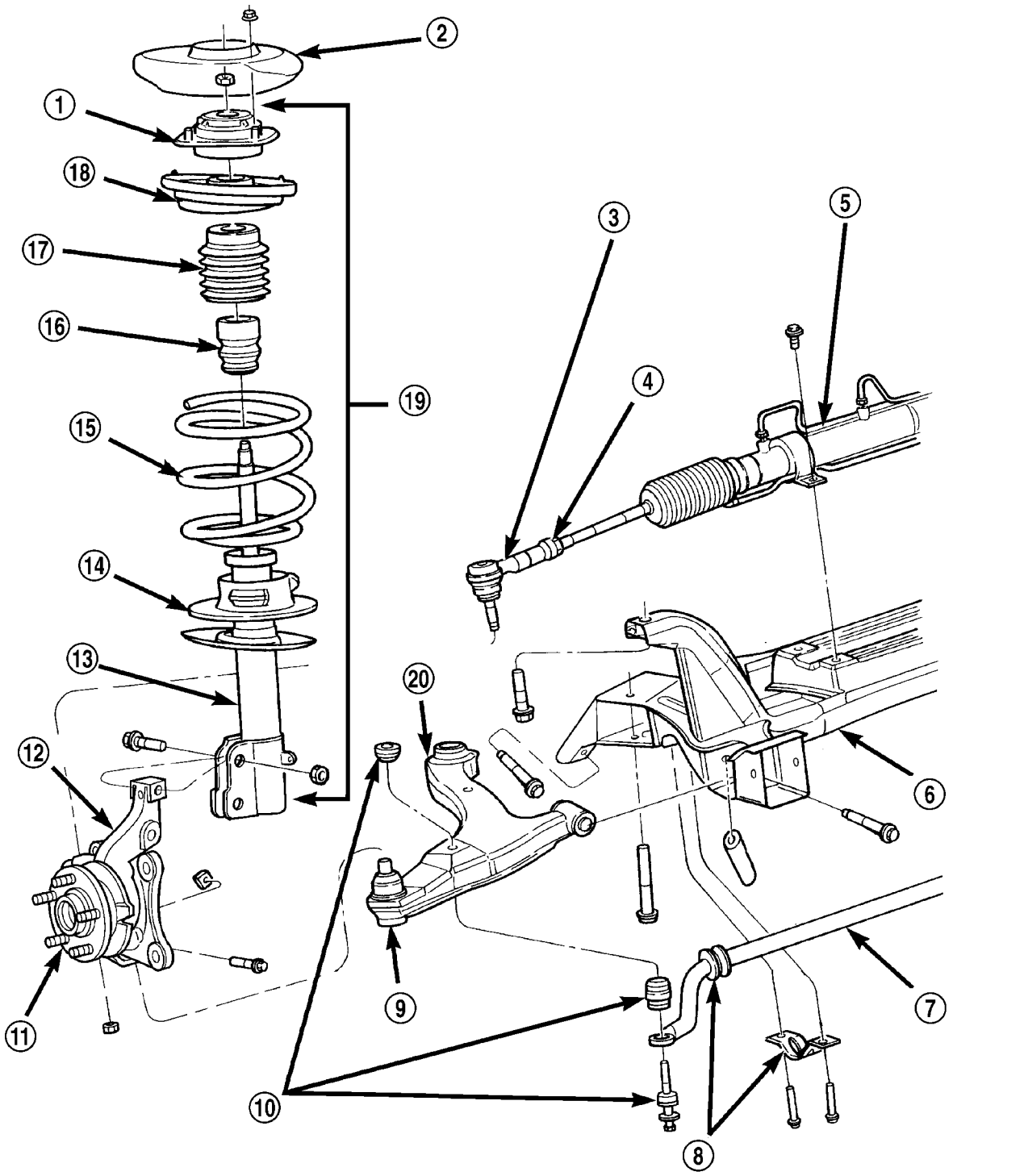

Fig. 1 Front Suspension System

FRONT SUSPENSION (Continued)

1 - UPPER MOUNT
2 - VEHICLE STRUT TOWER
3 - OUTER TIE ROD
4 - JAM NUT
5 - STEERING GEAR
6 - CROSSMEMBER
7 - STABILIZER BAR
8 - STABILIZER BAR CUSHION AND RETAINER
9 - BALL JOINT
10 - STABILIZER BAR LINK
11 - HUB
12 - KNUCKLE
13 - STRUT
14 - LOWER SPRING ISOLATOR
15 - COIL SPRING
16 - JOUNCE BUMPER
17 - DUST SHIELD
18 - SPRING SEAT AND BEARING
19 - STRUT ASSEMBLY
20 - LOWER CONTROL ARM

SPECIFICATIONS

FRONT SUSPENSION FASTENER TORQUE

DESCRIPTION	N·m	Ft. Lbs.	In. Lbs.
Ball Joint Stud Pinch Bolt	95	70	—
Hub Nut	244	180	—
Disc Brake Caliper Adapter Knuckle Bolts	104	77	—
Lower Control Arm Front Pivot Bolt	170	125	—
Lower Control Arm Rear Pivot Bolt	250	185	—
Stabilizer Bar Cushion Retainer Bolts	28	21	250
Stabilizer Bar Link Nuts	28	21	250
Strut Clevis-to-Knuckle Nuts	54 + 90° turn	40 + 90° turn	—
Strut Shaft Nut	75	55	—
Strut-to-Tower Nuts	34	25	—
Tie Rod Adjuster Jam Nut	75	55	—
Tie Rod End-to-Knuckle Nut	54	40	—
Wheel Bearing Retainer Plate Bolts	28	21	250
Wheel Mounting (Lug) Nuts	135	100	—

SPECIAL TOOLS

FRONT SUSPENSION

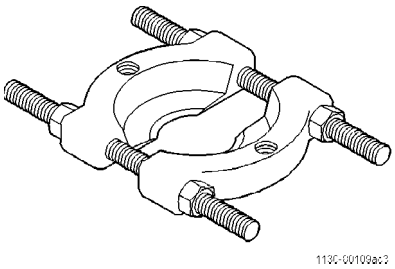

Splitter, Bearing 1130

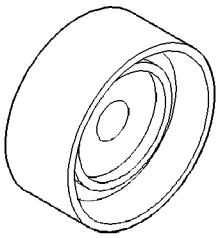

Installer, Bearing 5052

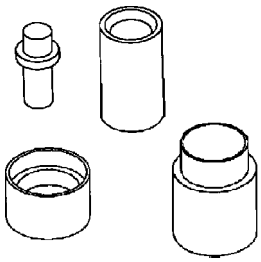

Remover/Installer 6644 (-2)

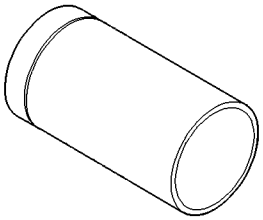

Installer 6758

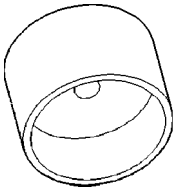

Installer 6760

FRONT SUSPENSION (Continued)

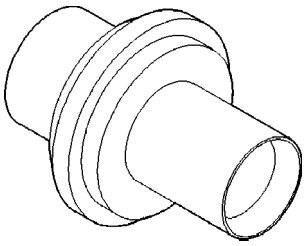

Remover 6804

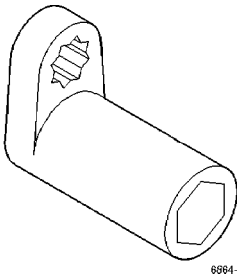

Socket/Wrench Strut Nut 6864

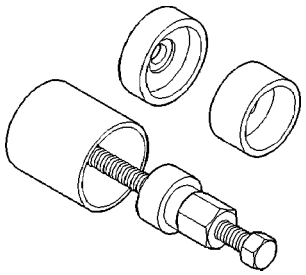

Remover/Installer 6908 (–2)

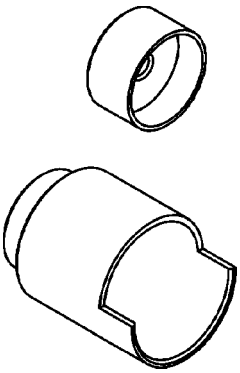

Remover/Installer 8373

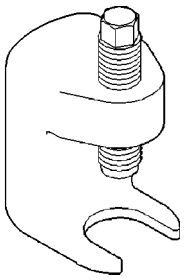

Remover C-4150A

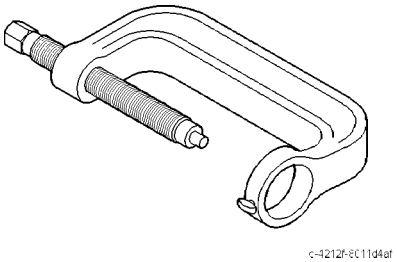

Press, Ball Joint C-4212F

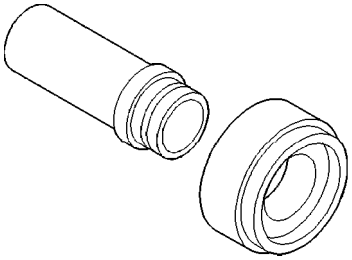

Installer Adapter C-4698-2

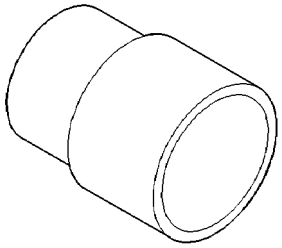

Remover MB-990799

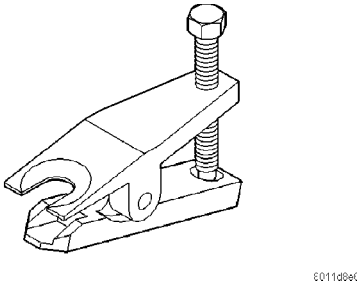

Remover MB991113

HUB / BEARING

DESCRIPTION

The wheel bearing and hub are pressed into the steering knuckle. (Refer to 2 - SUSPENSION/FRONT/KNUCKLE - DESCRIPTION)

OPERATION

The wheel bearing and hub are pressed into the steering knuckle. (Refer to 2 - SUSPENSION/FRONT/KNUCKLE - OPERATION)

DIAGNOSIS AND TESTING - WHEEL BEARING AND HUB

The wheel bearing is designed for the life of the vehicle and requires no type of periodic maintenance. The following procedure may be used for diagnosing the condition of the wheel bearing and hub.

With the wheel, disc brake caliper, and brake rotor removed, rotate the wheel hub. Any roughness or resistance to rotation may indicate dirt intrusion or a failed hub bearing. If the bearing exhibits any of these conditions during diagnosis, the hub bearing will require replacement. Do not attempt to disassemble the bearing for repair. If the wheel bearing is disassembled for any reason, it must be replaced.

Damaged bearing seals and the resulting excessive grease loss may also require bearing replacement. Moderate grease weapage from the bearing is considered normal and should not require replacement of the wheel bearing.

To diagnose a bent hub, (Refer to 5 - BRAKES/HYDRAULIC/MECHANICAL/ROTORS - DIAGNOSIS AND TESTING) for the procedure on measuring hub runout.

REMOVAL

The wheel bearing and hub are pressed into the knuckle. (Refer to 2 - SUSPENSION/FRONT/KNUCKLE - REMOVAL)

INSTALLATION

The wheel bearing and hub are pressed into the knuckle. (Refer to 2 - SUSPENSION/FRONT/KNUCKLE - INSTALLATION)

KNUCKLE

DESCRIPTION - STEERING KNUCKLE

The steering knuckle is a single casting with legs machined for attachment to the front strut assembly on the top, lower control arm ball joint on the bottom, and steering linkage on the trailing end (Fig. 1). The steering knuckle also has two machined, drilled and tapped legs on the leading end casting to support and align the front disc brake caliper adapter.

The knuckle supports the wheel bearing and hub (Fig. 1). The wheel hub is pressed into a sealed-for-life wheel bearing that is pressed into the steering knuckle. A retainer plate also holds the bearing in place. The hub supports the driveshaft outer constant velocity (C/V) joint. Each is splined and meshes in the center of the hub. The outer C/V joint is retained to the hub using a nut. The nut is locked to the outer C/V stub shaft using a nut retainer and cotter pin.

The wheel bearing is a Unit 1 type cartridge bearing that requires no maintenance. The wheel bearing can be serviced separately from the hub.

The hub has five studs pressed into its flange.

OPERATION - STEERING KNUCKLE

The steering knuckle pivots with the strut assembly between the lower ball joint and the pivot bearing in the strut assembly. The steering gear outer tie rod end connects to the trailing end of each knuckle, allowing the vehicle to be steered.

The center of the knuckle supports the hub, wheel bearing and axle shaft.

The hub and wheel bearing work together. The wheel bearing has internal bearings that allow the hub to rotate with the driveshaft and the tire and wheel assembly. The hub's five studs mount the tire and wheel to the vehicle.

DIAGNOSIS AND TESTING - STEERING KNUCKLE

The front suspension steering knuckle is not a repairable component of the front suspension. It must be replaced if found to be damaged in any way. If it is determined that the steering knuckle is bent when servicing the vehicle, no attempt is to be made to straighten the steering knuckle.

REMOVAL - STEERING KNUCKLE

NOTE: Before proceeding, review all Warnings and Cautions. (Refer to 2 - SUSPENSION/FRONT - WARNING)

(1) Apply the brakes and hold in place.

(2) Raise the vehicle. (Refer to LUBRICATION & MAINTENANCE/HOISTING - STANDARD PROCEDURE)

(3) Remove the front tire and wheel assembly.

(4) Remove the cotter pin, lock nut and spring washer from the hub nut (Fig. 2).

(5) While the brakes are applied, loosen and remove the hub nut on the end of the driveshaft (Fig. 2).

(6) Release the brakes.

KNUCKLE (Continued)

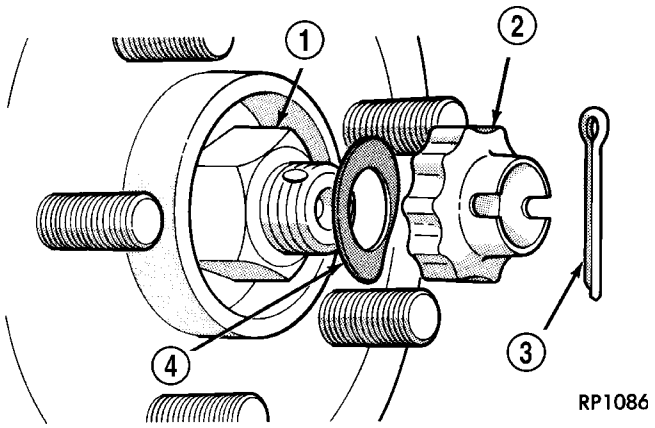

Fig. 2 Hub Nut

1 - HUB NUT
2 - NUT LOCK
3 - COTTER PIN
4 - SPRING WASHER

(7) Remove the front disc brake caliper and adapter as an assembly, and the brake rotor from the steering knuckle. Refer to BRAKE ROTOR in the BRAKE section for the procedure.

(8) Remove the nut attaching the outer tie rod to the steering knuckle. To do this, hold the tie rod end stud with a wrench while loosening and removing the nut with a standard wrench or crowfoot wrench (Fig. 3).

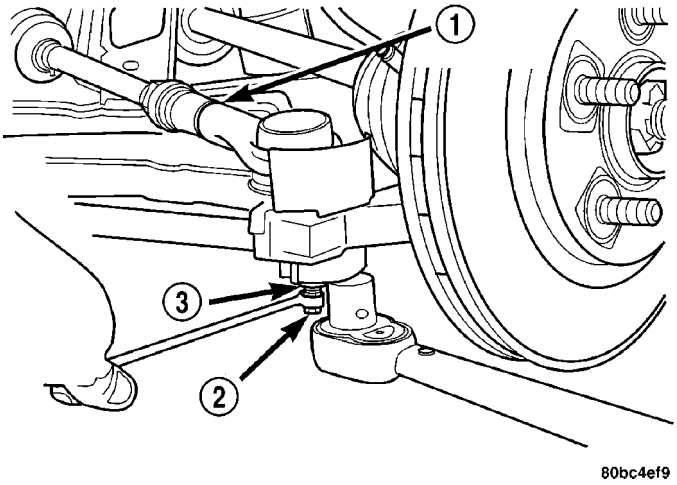

Fig. 3 Tie Rod Nut Removal/Installation

1 - OUTER TIE ROD
2 - STUD
3 - NUT

(9) Remove the tie rod end from the steering knuckle using Remover, Special Tool MB991113 (Fig. 4).

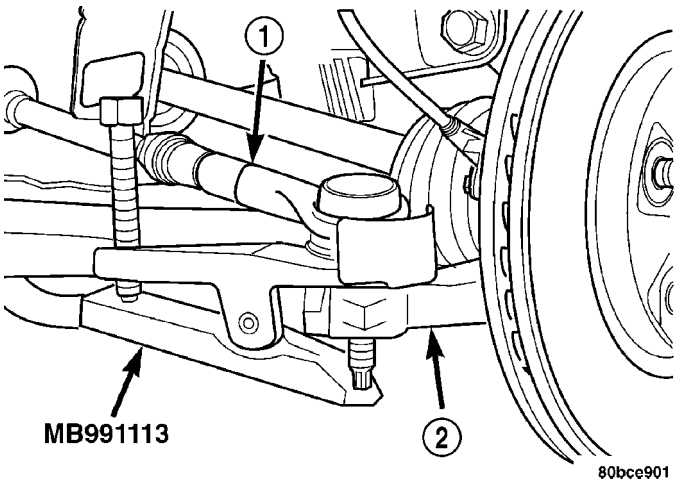

Fig. 4 Tie Rod Removal

1 - OUTER TIE ROD
2 - STEERING KNUCKLE

(10) Remove the tie rod heat shield.

(11) Remove the nut and pinch bolt clamping the ball joint stud to the steering knuckle (Fig. 5).

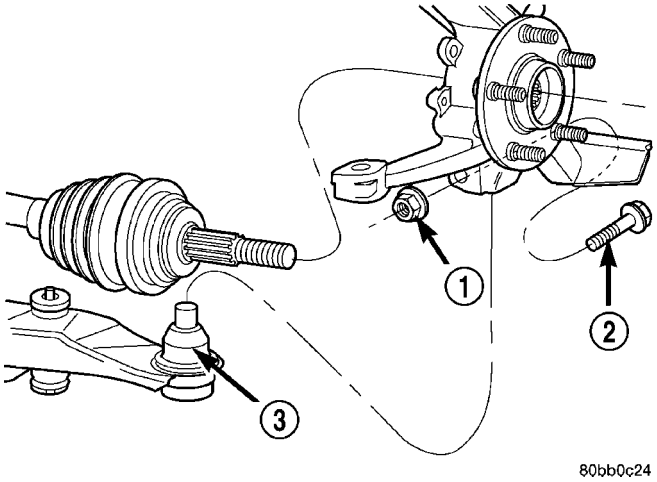

Fig. 5 Ball Joint Bolt And Nut

1 - NUT
2 - BOLT
3 - BALL JOINT

CAUTION: The strut assembly-to-steering knuckle attaching bolts are serrated and must not be turned during removal. Hold the bolts stationary in the steering knuckles while removing the nuts, then tap the bolts out using a pin punch.

(12) Remove the two bolts attaching the strut to the steering knuckle.

NOTE: Use caution when separating the ball joint stud from the steering knuckle, so the ball joint seal does not get cut.

KNUCKLE (Continued)

(13) Separate the ball joint stud from the steering knuckle by prying down on lower control arm and up against the ball joint boss on the steering knuckle (Fig. 6).

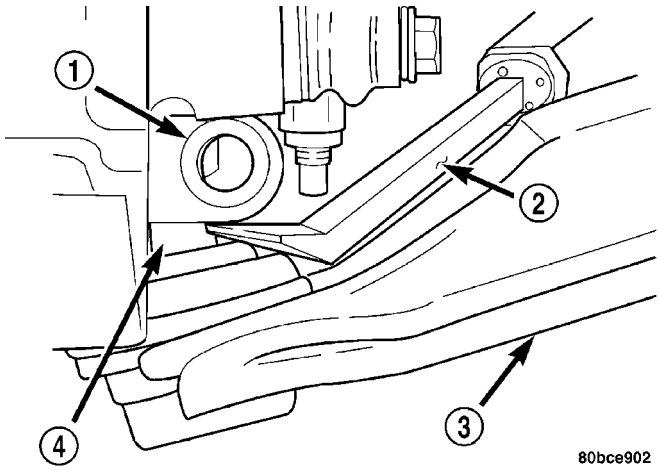

Fig. 6 Separate Ball Joint From Knuckle

1 - STEERING KNUCKLE
2 - PRY BAR
3 - LOWER CONTROL ARM
4 - BALL JOINT STUD

NOTE: Do not allow the driveshaft to hang by the inner C/V joint; it must be supported to keep the joint from separating during this operation.

(14) Pull the steering knuckle off the driveshaft outer C/V joint splines and remove the steering knuckle.

NOTE: The cartridge type front wheel bearing used on this vehicle is not transferable to the replacement steering knuckle. If the replacement steering knuckle does not come with a wheel bearing, a new bearing must be installed in the steering knuckle. Installation of the new wheel bearing and hub must be done before installing the steering knuckle on the vehicle.

(15) If the wheel bearing and hub need removal, (Refer to 2 - SUSPENSION/FRONT/KNUCKLE - DISASSEMBLY). Do not reuse the wheel bearing.

DISASSEMBLY - STEERING KNUCKLE (WHEEL BEARING AND HUB)

NOTE: The removal and installation of the wheel bearing and hub from the steering knuckle is only to be done with the steering knuckle removed from the vehicle using the following procedure.

(1) Remove steering knuckle, hub, and wheel bearing as an assembly from the vehicle. (Refer to 2 - SUSPENSION/FRONT/KNUCKLE - REMOVAL)

(2) Three wheel studs across from one another require removal from the hub flange. Rotate the hub to align each wheel mounting stud with the notch in the bearing retainer plate before removal. Using Remover, Special Tool C–4150A (Fig. 7), press the three wheel mounting studs out of the hub flange. Remove the wheel mounting studs from the hub through the open notch (Fig. 8).

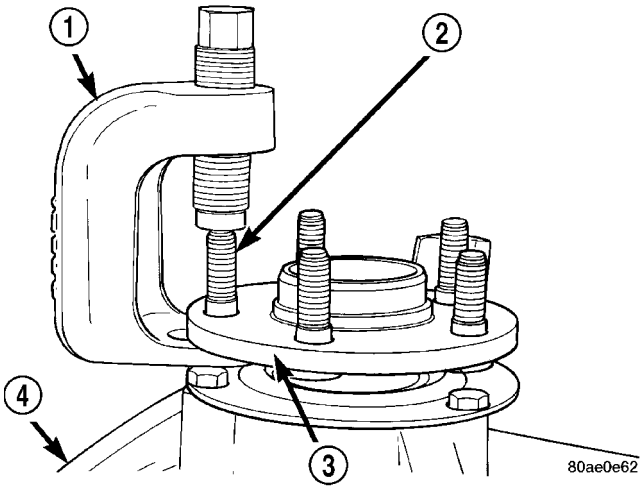

Fig. 7 Special Tool C-4150A

1 - SPECIAL TOOL 4150A
2 - WHEEL MOUNTING STUD
3 - HUB FLANGE
4 - STEERING KNUCKLE

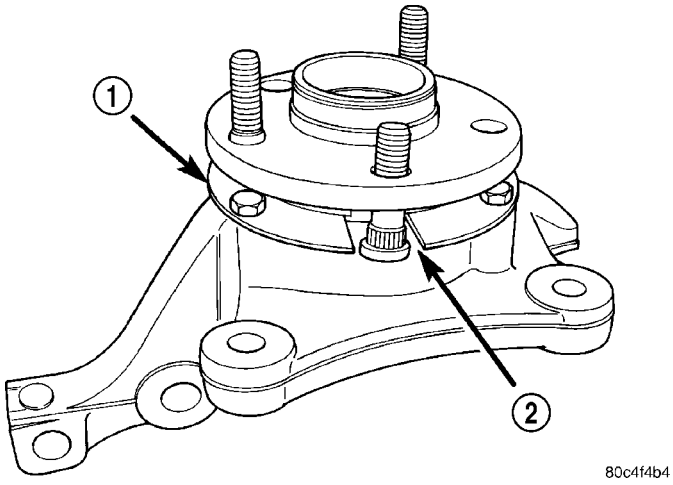

Fig. 8 Stud Removal From Hub

1 - BEARING RETAINER PLATE
2 - NOTCH

(3) Rotate the hub so the stud mounting holes in the hub are facing in the direction shown in the figure (Fig. 9).

KNUCKLE (Continued)

(4) Install the Bearing Splitter, Special Tool 1130, between the hub and the bearing retainer plate as shown (Fig. 9). Absence of the three wheel mounting studs allows the bearing splitter to be installed behind the flange. Hand tighten the nuts to hold bearing splitter in place on steering knuckle.

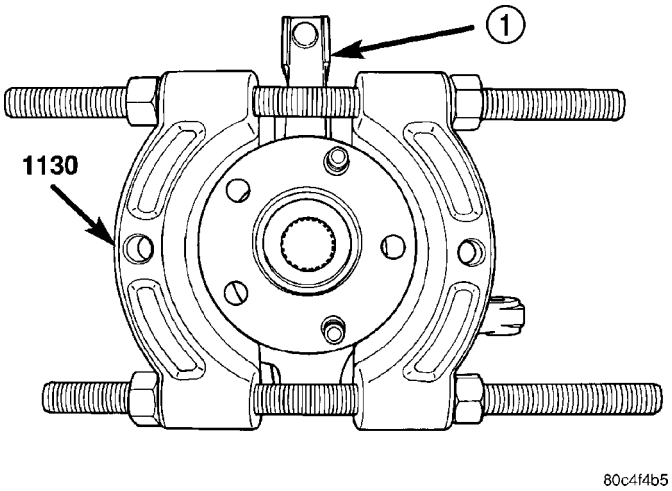

Fig. 9 Bearing Splitter Properly Installed

1 - KNUCKLE

(5) Place the steering knuckle face down in an arbor press supported by the bearing splitter as shown (Fig. 10).

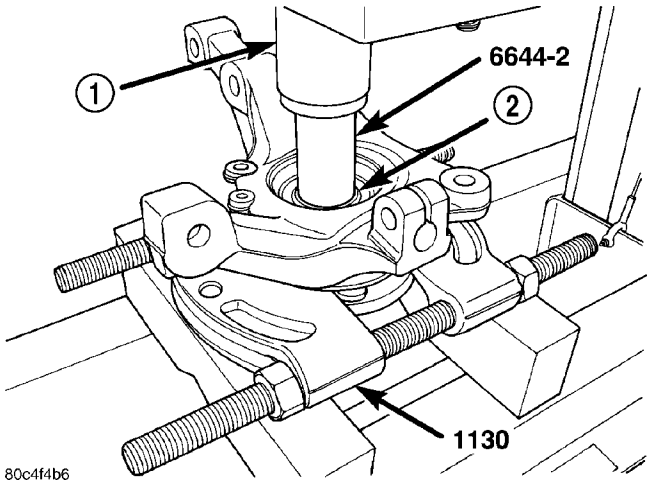

Fig. 10 Steering Knuckle Positioned In Press

1 - PRESS RAM
2 - HUB

(6) Position Remover/Installer, Special Tool 6644-2, on the small end of the hub (Fig. 10). Using the arbor press, remove the hub from the wheel bearing. The bearing race will normally come out of the wheel bearing with the hub as it is pressed out of the bearing.

(7) Remove the bearing splitter from the steering knuckle.

(8) Remove the three bolts mounting the bearing retainer plate to the steering knuckle (Fig. 11). Remove the bearing retainer plate from the steering knuckle.

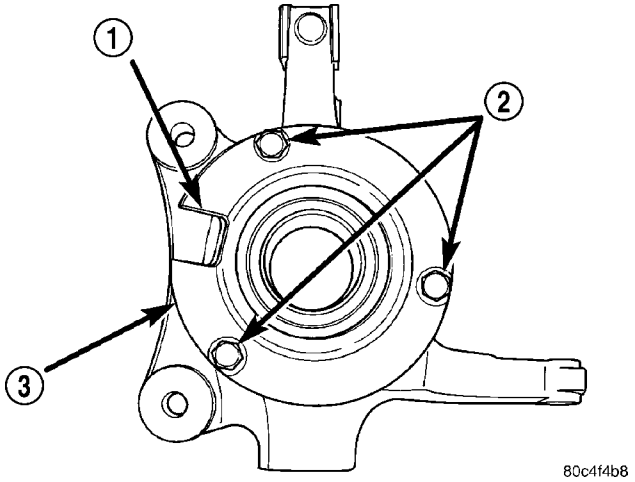

Fig. 11 Wheel Bearing Retainer Plate

1 - NOTCH
2 - BOLTS
3 - BEARING RETAINER PLATE

(9) Place the steering knuckle back in the arbor press face down as shown (Fig. 12). The press support blocks must not obstruct the bearing while it is being pressed out of the steering knuckle.

(10) Place Remover/Installer, Special Tool MB-990799 on the outer race of the wheel bearing (Fig. 12). Press the wheel bearing out of the steering knuckle.

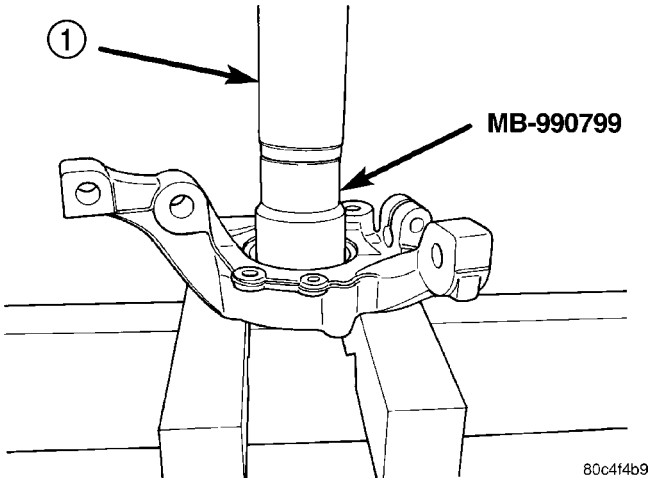

Fig. 12 Wheel Bearing Removal

1 - PRESS RAM

(11) Remove the bearing race that is still pressed onto the hub. To do so, install Bearing Splitter, Special Tool 1130, between the hub flange and the bearing race (Fig. 13). Place the hub, bearing race and bearing splitter in an arbor press as shown (Fig. 13).

KNUCKLE (Continued)

Place Remover/Installer, Special Tool 6644-2 on end of hub. Press the hub out of the bearing race.

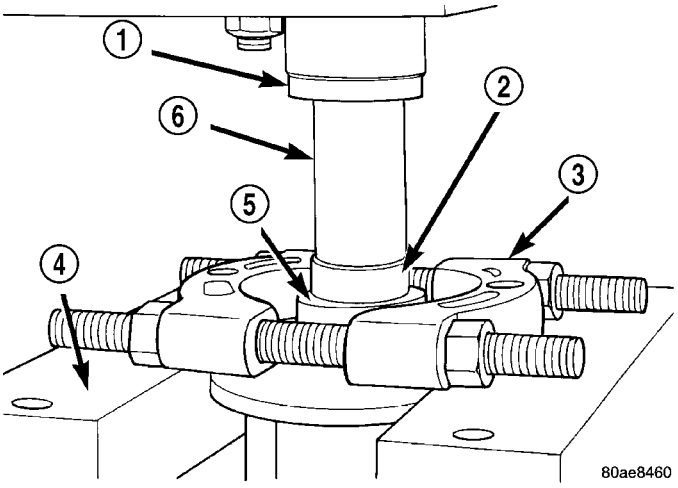

Fig. 13 Bearing Race Removal From Hub

1 - ARBOR PRESS
2 - HUB
3 - SPECIAL TOOL 1130
4 - PRESS BLOCKS (2)
5 - BEARING RACE
6 - SPECIAL TOOL 6644–2

NOTE: For steering knuckle reassembly, (Refer to 2 - SUSPENSION/FRONT/KNUCKLE - ASSEMBLY).

ASSEMBLY - STEERING KNUCKLE (WHEEL BEARING AND HUB)

(1) Wipe the bore of the steering knuckle clean of any grease or dirt with a clean, dry shop towel.

(2) Place the steering knuckle in an arbor press with Installer, Special Tool C-4698-2, supporting the steering knuckle (Fig. 14).

(3) Place the NEW wheel bearing into the bore of the steering knuckle. Be sure the wheel bearing is placed squarely into the bore.

(4) Place Installer, Special Tool 5052, on the outer race of the wheel bearing (Fig. 14). Press the wheel bearing into the steering knuckle until it is fully bottomed in the bore of the steering knuckle.

(5) Remove the knuckle from the press.

NOTE: Use only the original or identical replacement bolts to mount the bearing retainer plate to the steering knuckle.

(6) Noting the notch location, install the bearing retainer plate on the steering knuckle as shown (Fig. 11). Install the three bearing retainer mounting bolts. Tighten the bearing retainer plate mounting bolts to a torque of 28 N·m (250 in. lbs.).

(7) Install the previously removed wheel mounting studs back into the hub flange. To do so:

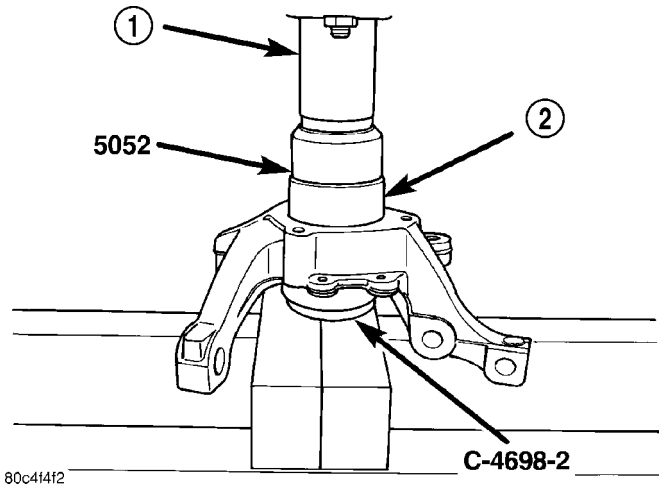

Fig. 14 Wheel Bearing Installation

1 - PRESS RAM
2 - BEARING

(a) Place the studs in the three holes in the hub flange.

(b) Place the hub in the arbor press supported by Special Tool C-4698-1, allowing the first stud to extend down into the tool (Fig. 15).

(c) Press the wheel mounting stud into the hub flange until it is fully seated against the back side on the hub flange.

(d) Remove the hub and tool from the press.

(e) Repeat the steps (b), (c) and (d) on the remaining two studs.

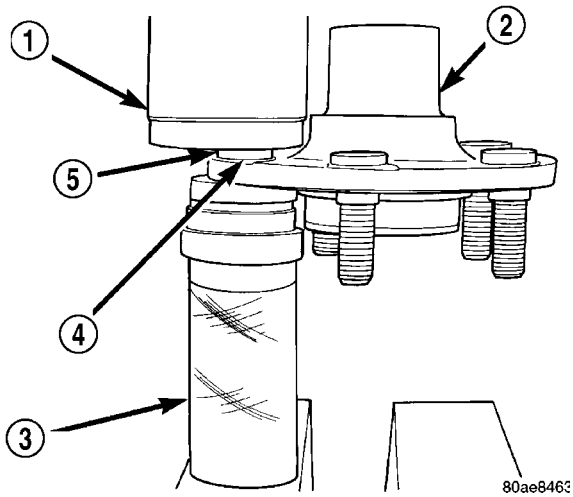

Fig. 15 Wheel Mounting Stud Installation

1 - ARBOR PRESS RAM
2 - HUB
3 - SPECIAL TOOL C-4698–1
4 - NO GAP IS ALLOWED BETWEEN STUD FLANGE AND HUB HERE
5 - WHEEL MOUNTING STUD

KNUCKLE (Continued)

(8) Place the steering knuckle with the wheel bearing installed back in the arbor press with the smaller end of Remover/Installer, Special Tool MB-990799, supporting the inner race of the wheel bearing as shown (Fig. 16).

(9) Place the hub in the wheel bearing making sure it is square with the bearing inner race (Fig. 16). Press the hub into the wheel bearing until it is fully bottomed in the wheel bearing.

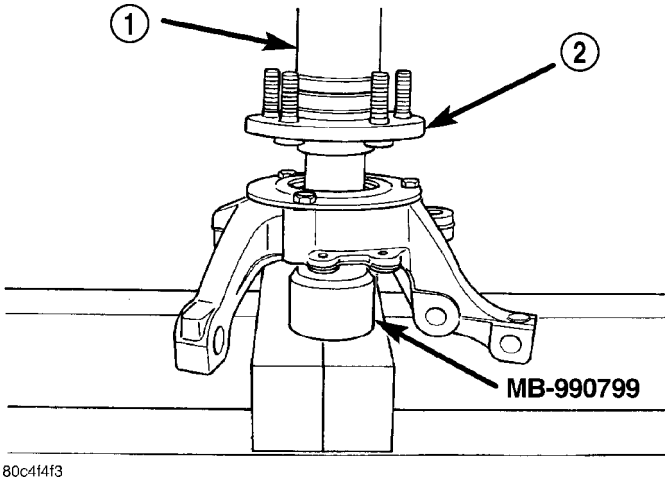

Fig. 16 Hub Installation

1 - PRESS RAM
2 - HUB

(10) Remove the steering knuckle and tools from the press.

(11) Verify the hub turns smoothly without rubbing or binding.

(12) Install the steering knuckle on the vehicle. (Refer to 2 - SUSPENSION/FRONT/KNUCKLE - INSTALLATION)

INSTALLATION - STEERING KNUCKLE

(1) Slide the hub of the steering knuckle onto the splines on the driveshaft C/V joint.

(2) Install the steering knuckle onto the ball joint stud aligning the bolt hole in the knuckle boss with the notch formed in the side of the ball joint stud.

(3) Install a new ball joint stud pinch bolt and nut (Fig. 5). Tighten the nut to a torque of 95 N·m (70 ft. lbs.).

CAUTION: The strut assembly-to-steering knuckle attaching bolts are serrated and must not be turned during installation. Install the nuts while holding the bolts stationary in the steering knuckle.

(4) Position the lower end of the strut assembly in line with the upper end of the steering knuckle and align the mounting holes (Fig. 1). Install the two attaching bolts. The bolts should be installed with so that the nuts face towards the front of the vehicle once installed. Install the nuts. Holding the bolts in place tighten the nuts to a torque of 53 N·m (40 ft. lbs.) plus an additional 90° turn after the specified torque is met.

(5) Place the tie rod heat shield on the steering knuckle arm so that the shield is positioned straight away from the steering gear and tie rod end once installed. Align the hole in the shield with the hole in the steering knuckle arm.

(6) Install the outer tie rod ball stud into the hole in the steering knuckle arm. Start the tie rod attaching nut onto the stud. Hold the tie rod end stud with a wrench while tightening the nut with a standard wrench or crowfoot wrench (Fig. 3). To fully tighten the nut to specifications, use a crowfoot wrench on a torque wrench to turn the nut, and a wrench on the stud. Tighten the nut to a torque of 55 N·m (40 ft. lbs.).

(7) Install the brake rotor, disc brake caliper and adapter. (Refer to 5 - BRAKES/HYDRAULIC/MECHANICAL/ROTOR - INSTALLATION)

(8) Clean all foreign matter from the threads of the driveshaft outer C/V joint.

(9) Install the hub nut in the end of the driveshaft and snug it (Fig. 2).

(10) Have a helper apply the brakes. With vehicle brakes applied to keep brake rotor and hub from turning, tighten the hub nut to a torque of 244 N·m (180 ft. lbs.)

(11) Install the spring washer, lock nut and cotter pin on the hub nut (Fig. 2). Wrap the cotter pin ends tightly around the lock nut (Fig. 17).

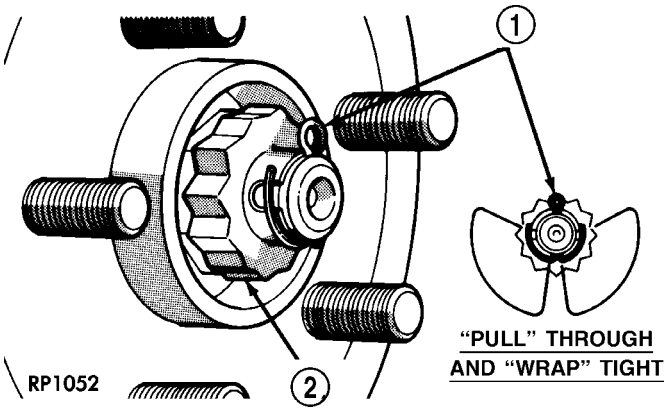

Fig. 17 Correctly Installed Cotter Pin

1 - COTTER PIN
2 - NUT LOCK

(12) Install the tire and wheel assembly. Install the wheel mounting nuts and tighten them to a torque of 135 N·m (100 ft. lbs.).

(13) Lower the vehicle.

(14) Set the front toe on the vehicle to required specification. (Refer to 2 - SUSPENSION/WHEEL ALIGNMENT - STANDARD PROCEDURE)

LOWER BALL JOINT

DIAGNOSIS AND TESTING - BALL JOINT

With the weight of the vehicle resting on the road wheels, grasp the headless grease fitting as shown (Fig. 18). With no mechanical assistance or added force, attempt to move the grease fitting. If the ball joint is worn, the grease fitting will move. If movement is noted, replace the ball joint.

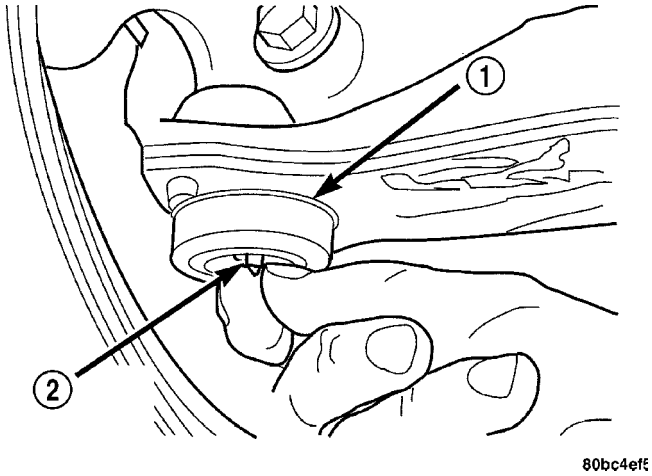

Fig. 18 Checking Ball Joint Wear

1 - BALL JOINT
2 - HEADLESS GREASE FITTING

CAUTION: No attempt should be made to service the headless grease fitting on the ball joint. It has been purposely snapped off by the manufacturer to avoid over-greasing.

LOWER BALL JOINT SEAL BOOT

REMOVAL

(1) Remove steering knuckle from vehicle. (Refer to 2 - SUSPENSION/FRONT/KNUCKLE - REMOVAL)

(2) Using a screwdriver or other suitable tool, pry seal boot off of ball joint (Fig. 19).

INSTALLATION

(1) Wipe off used grease around ball joint stem.

CAUTION: When installing the sealing boot on the ball joint, position the upward lip on the seal boot outside perimeter outward, away from the control arm once installed (Fig. 20). It is there to help shield heat from the sealing boot.

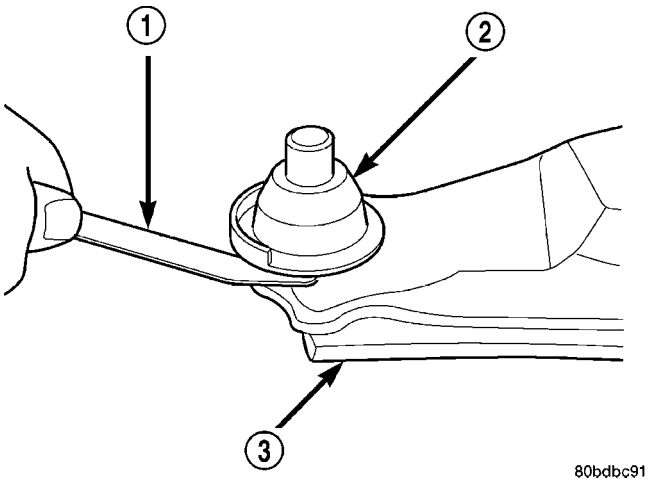

Fig. 19 Seal Boot Removal

1 - TOOL
2 - SEAL BOOT
3 - LOWER CONTROL ARM

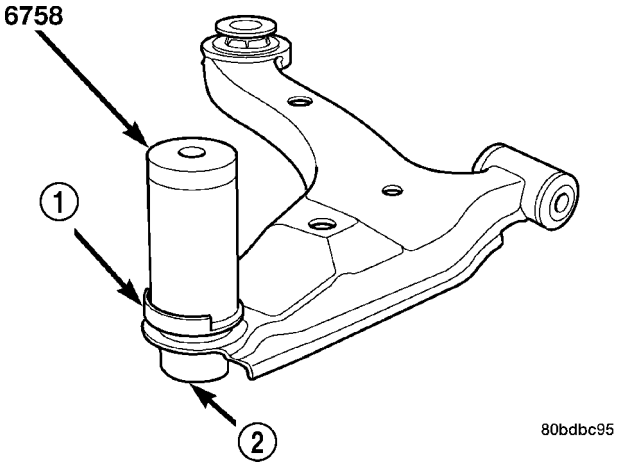

Fig. 20 Seal Boot Installation

1 - SEAL BOOT UPWARD LIP
2 - BALL JOINT

(2) Place NEW ball joint seal boot over ball joint stem. Upward lip located on outside perimeter of seal boot must point outward, away from control arm once installed (Fig. 20).

(3) By hand, start sealing boot over sides of the ball joint.

(4) Position Installer, Special Tool 6758, over sealing boot outer diameter as shown (Fig. 20). By hand, apply pressure to top of Installer until seal boot is pressed squarely down against top surface of lower control arm.

(5) Remove tool.

(6) Remove headless grease fitting on ball joint and replace it with standard zirc-type grease fitting. Do not discard headless grease fitting.

LOWER BALL JOINT SEAL BOOT (Continued)

CAUTION: It is important to lubricate the ball joint before installation of steering knuckle to allow proper venting when the seal is filled. If the ball joint is lubricated after installation to knuckle, damage to the seal can occur.

(7) Using a hand operated pump grease gun, fill the ball joint seal boot with Mopar® Multi-Mileage Lube or equivalent until grease pushes out past ball joint stem. Wipe off overfill.

(8) Remove standard zirc-type grease fitting and reinstall headless grease fitting on ball joint to prevent future lubricating. See above caution.

(9) Install steering knuckle. (Refer to 2 - SUSPENSION/FRONT/KNUCKLE - INSTALLATION)

LOWER CONTROL ARM

DESCRIPTION

There is one lower control arm on each side of the vehicle. Each lower control arm is a stamped steel unit using rubber isolated pivot bushings to isolate it from the front suspension crossmember and frame of the vehicle (Fig. 1) . The rear bushing can be serviced separately.

The front of the lower control arm is bolted to the front crossmember using a bolt through the center of the rubber pivot bushing. The rear of the lower control arm is mounted to both the front crossmember and the frame rail of the vehicle using a thru-bolt. The thru-bolt goes through both the crossmember and rear lower control arm bushing, threading directly into a caged nut in the frame rail of the vehicle.

The left and right lower control arms are interconnected through a linked rubber isolated stabilizer bar.

The outboard end of each lower control arm connects to the steering knuckle using a ball joint.

The lower control arm connects to the steering knuckle through a ball joint mounted at the outboard end of the arm (Fig. 1) . The ball joint is pressed into the lower control arm and has a non-tapered stud with a notch for steering knuckle pinch bolt clearance. The ball joint stud is clamped and locked to the steering knuckle lower leg using a pinch bolt.

The ball joint is lubricated for life during the manufacturing process. Once lubricated for life, the grease fitting head is snapped off by the manufacturer. This is done to eliminate the possibility of lubrication later in the ball joints life thus damaging the non-vented ball joint seal boot.

The ball joint used on this vehicle is replaceable and can be serviced as a separate component of the lower control arm.

OPERATION

The lower control arm supports the lower end of the steering knuckle and allows for the up and down movement of the suspension during the jounce and rebound travel. The lower control arm ball joint connects the arm to the steering knuckle.

The ball joint is a pivotal joint on the lower control arm that allows the knuckle to move up and down, and turn with ease.

DIAGNOSIS AND TESTING - LOWER CONTROL ARM

Inspect the lower control arm for signs of damage from contact with the ground or road debris. If the lower control arm shows any sign of damage, look for distortion. Do not attempt to repair or straighten a broken or bent lower control arm. If damaged, the lower control arm stamping is serviced only as a complete component.

The serviceable components of the lower control arm are: the ball joint, the ball joint grease seal and the lower control arm rear isolator bushing.

Inspect both lower control arm isolator bushings for severe deterioration and replace as required. Inspect the ball joint per the inspection procedure in this section of the service manual and replace as required. (Refer to 2 - SUSPENSION/FRONT/LOWER BALL JOINT - DIAGNOSIS AND TESTING).

REMOVAL - LOWER CONTROL ARM

NOTE: Before proceeding, (Refer to 2 - SUSPENSION/FRONT - WARNING).

(1) Raise the vehicle. (Refer to LUBRICATION & MAINTENANCE/HOISTING - STANDARD PROCEDURE)

(2) Remove the front tire and wheel assembly.

(3) Remove both stabilizer bar links from the vehicle (Fig. 21). Remove each link by holding the upper retainer/nut with a wrench and turning the link bolt.

(4) Rotate the forward ends of the stabilizer bar downward. It may be necessary to loosen the stabilizer bar cushion retainer bolts a little to ease any turning resistance.

(5) Remove the nut and pinch bolt clamping the ball joint stud to the steering knuckle (Fig. 22).

CAUTION: After removing the steering knuckle from the ball joint stud, do not pull outward on the knuckle. Pulling the steering knuckle outward at this point can separate the inner C/V joint on the driveshaft. Refer to FRONT DRIVESHAFTS in the DIFFERENTIAL AND DRIVELINE group for further information.

LOWER CONTROL ARM (Continued)

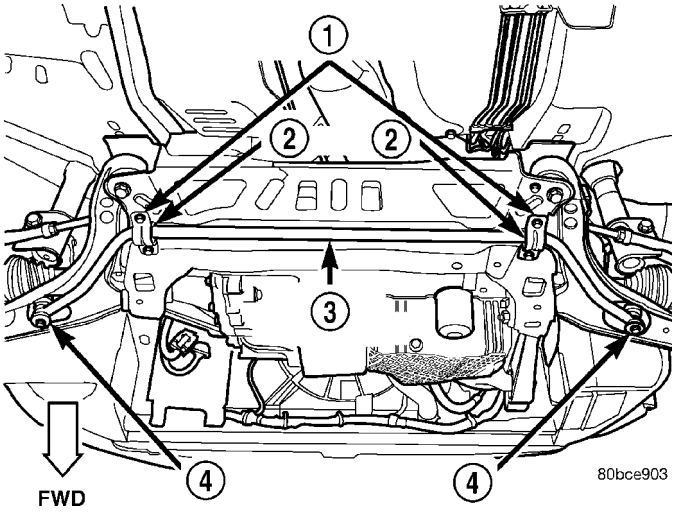

Fig. 21 Stabilizer Bar Links (Typical)

1 - STABILIZER BAR CUSHION RETAINERS
2 - CUSHIONS
3 - FRONT STABILIZER BAR
4 - STABILIZER BAR LINKS

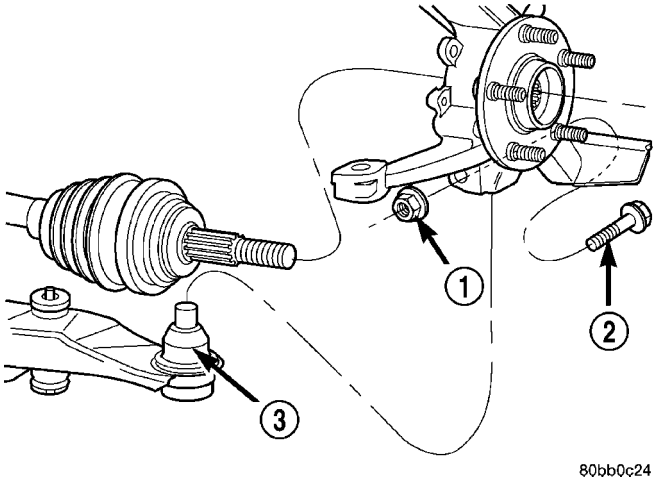

Fig. 22 Ball Joint Bolt And Nut (Typical)

1 - NUT
2 - BOLT
3 - BALL JOINT

NOTE: Use caution when separating the ball joint stud from the steering knuckle, so the ball joint seal does not get cut.

(6) Separate the ball joint stud from the steering knuckle by prying down on lower control arm and up against the ball joint boss on the steering knuckle (Fig. 6).

(7) If the right lower control arm is being serviced, perform the following:

(a) Remove the screws fastening the front fascia to the reinforcement as necessary in order to access the drive-belt splash shield forward fastener screw (Fig. 23).

(b) Remove the drive-belt splash shield fasteners (Fig. 23). Remove the shield.

(c) Remove the pencil strut from the right front corner of the crossmember and body of the vehicle (Fig. 24). Remove the washer behind the strut from the torque strut bolt.

(d) Remove the bolts mounting the engine torque strut in place (Fig. 24), then remove the engine torque strut from the vehicle.

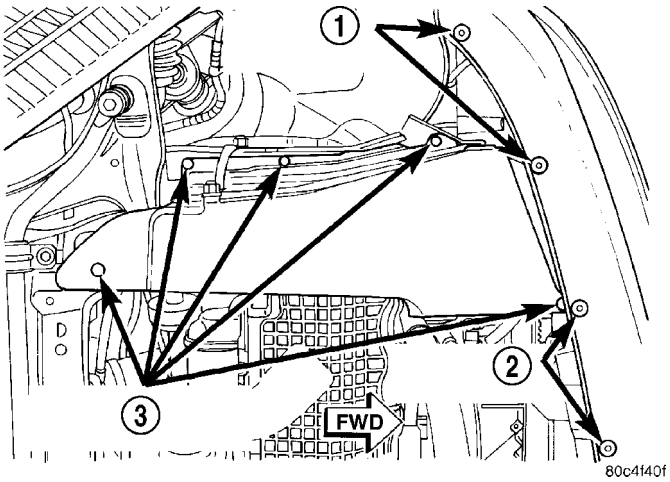

Fig. 23 Fascia And Splash Shield Fasteners

1 - FASCIA FASTENERS
2 - FASCIA FASTENERS
3 - SPLASH SHIELD FASTENERS

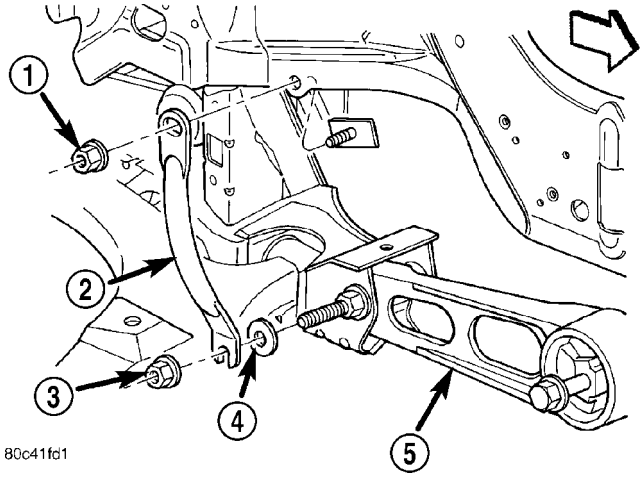

Fig. 24 Strut Mounting

1 - NUT
2 - PENCIL STRUT
3 - NUT
4 - FLAT WASHER
5 - LOWER TORQUE STRUT

LOWER CONTROL ARM (Continued)

(8) Remove the front pivot bolt attaching the lower control arm to the front suspension crossmember (Fig. 25). Remove the rear pivot bolt attaching the lower control arm to the front suspension crossmember and frame rail. Remove the lower control arm from the crossmember.

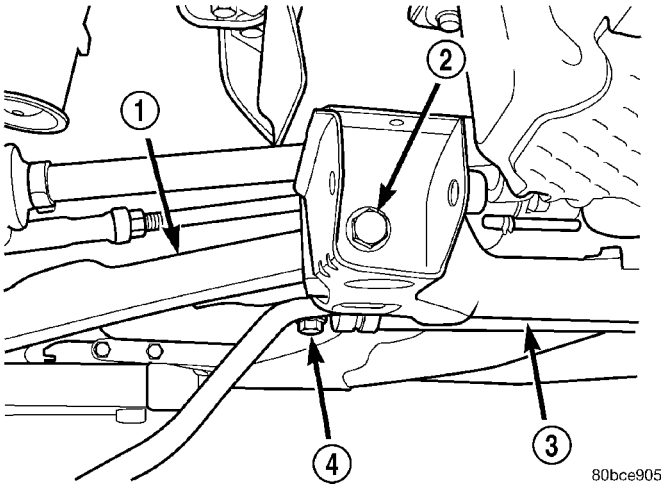

Fig. 25 Lower Control Arm Attaching Bolts

1 - LOWER CONTROL ARM
2 - FRONT BOLT
3 - CROSSMEMBER
4 - REAR BOLT

DISASSEMBLY

DISASSEMBLY - LOWER CONTROL ARM (BALL JOINT)

NOTE: The removal and installation of the lower ball joint from the lower control arm is to be done with the lower control arm removed from the vehicle. (Refer to 2 - SUSPENSION/FRONT/LOWER CONTROL ARM - REMOVAL).

(1) Using a screwdriver or other suitable tool, pry the seal boot off of the ball joint (Fig. 26).

(2) Position the Receiver, Special Tool 6908-2, on a hydraulic press to support the lower control arm (Fig. 27). Place the control arm on top of Tool 6908-2 so that the bottom of the ball joint sets into the Receiver cup.

(3) Place the larger end of the Adapter, Special Tool 6804, on top of the ball joint as shown (Fig. 27).

(4) Using the hydraulic press, press the ball joint completely out of the lower control arm, into the receiver.

(5) Remove the tools, ball joint and arm from the hydraulic press.

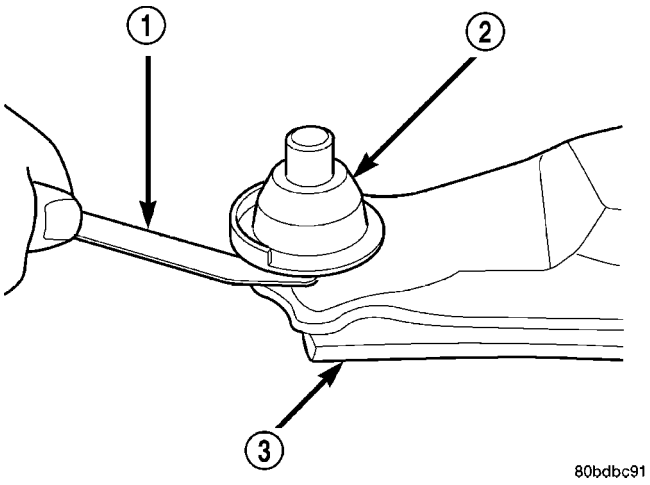

Fig. 26 Seal Boot Removal

1 - TOOL
2 - SEAL BOOT
3 - LOWER CONTROL ARM

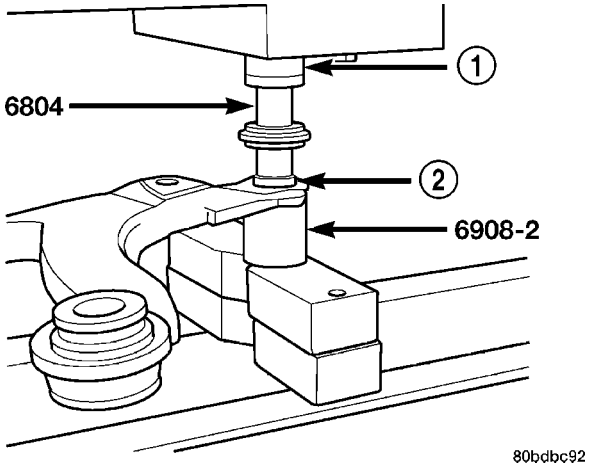

Fig. 27 Ball Joint Removal

1 - PRESS
2 - BALL JOINT

DISASSEMBLY - LOWER CONTROL ARM (REAR ISOLATOR BUSHING)

NOTE: The removal and installation of the rear isolator bushing from the lower control arm is only to be done with the lower control arm removed from the vehicle (Refer to 2 - SUSPENSION/FRONT/LOWER CONTROL ARM - REMOVAL). The front isolator bushing is not serviceable.

(1) Install the Remover Receiver, Special Tool 8373-1, into the cup of the Ball Joint Press, Special Tool C-4212F, and tighten the set screw. Install the Remover Driver, Special Tool 8373-2, on the tip of the Ball Joint Press screw-drive.

LOWER CONTROL ARM (Continued)

(2) Place the lower control arm outer flange against the Receiver as shown (Fig. 28). Tighten the screw-drive until the Driver contacts the outer circumference of the bushing evenly (Fig. 28). Continue to tighten the screw-drive until the bushing is pressed completely out of the lower control arm.

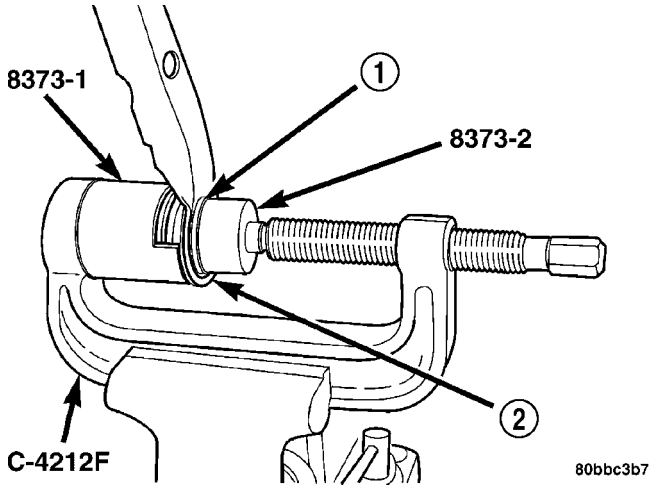

Fig. 28 Removing Bushing

1 - CONTROL ARM ISOLATOR BUSHING
2 - FLANGE

(3) Back off the screw-drive and remove the lower control arm and isolator bushing from the Receiver.

(4) Remove the driver 8373-2 and receiver 8373-1 from the ball joint press C-4212F.

ASSEMBLY

ASSEMBLY - LOWER CONTROL ARM (BALL JOINT)

CAUTION: When installing a ball joint in its mounting hole in the lower control arm, position the ball joint so the notch in the ball joint stud is facing the lower control arm front isolator bushing (Fig. 29). This will ease assembly of the ball joint to the steering knuckle when the installation of the pinch bolt is attempted.

(1) By hand, position ball joint into it's bore on the lower control arm (Fig. 29). To avoid binding upon installation, be sure the ball joint is not cocked in the bore.

(2) Position the Installer, Special Tool 6758, on a hydraulic press to support the lower control arm (Fig. 30). Place the control arm on top of Tool 6758 in the upside-down position, aligning the ball joint stud squarely with the Installer's cup.

(3) Place the larger end of the Adapter, Special Tool 6804, on top of the ball joint as shown (Fig. 30).

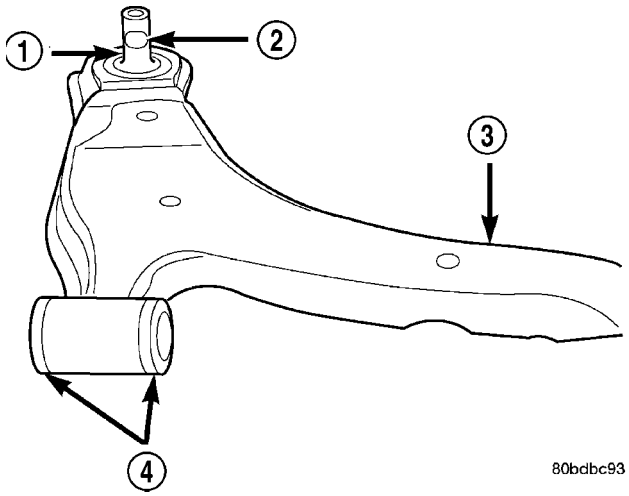

Fig. 29 Ball Joint Alignment

1 - BALL JOINT STUD
2 - NOTCH
3 - LOWER CONTROL ARM
4 - FRONT ISOLATOR BUSHING

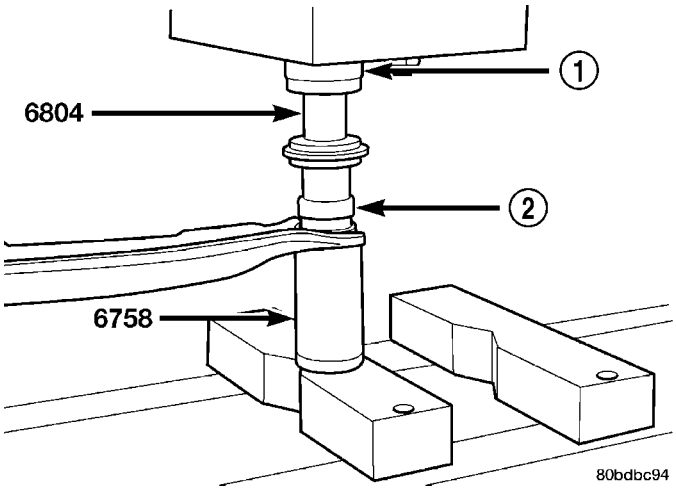

Fig. 30 Ball Joint Installation

1 - PRESS
2 - BALL JOINT

(4) Using the hydraulic press, press the ball joint into the lower control arm until the shoulder on the ball joint bottoms against the lower control arm ball joint bore. Do not apply excessive pressure against ball joint and lower control arm once the ball joint bottoms.

(5) Remove the tools and arm from the hydraulic press.

CAUTION: When installing the sealing boot on the ball joint, position the upward lip on the outside perimeter of the seal boot outward, away from the control arm once installed (Fig. 31). It is there to help shield heat from the sealing boot.

LOWER CONTROL ARM (Continued)

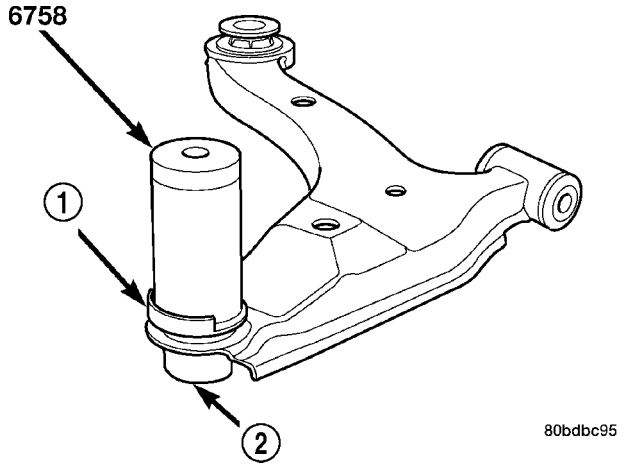

Fig. 31 Seal Boot Installation

1 - SEAL BOOT UPWARD LIP
2 - BALL JOINT

(6) Place a new ball joint seal boot over the ball joint stud. The upward lip located on the outside perimeter of the seal boot must point outward away from the control arm once installed (Fig. 31). Start the sealing boot over the sides of the ball joint by hand.

(7) Position the Installer, Special Tool 6758, over the sealing boot outer diameter as shown (Fig. 31). By hand, apply pressure to the top of the Installer until the seal boot is pressed squarely down against the top surface of lower control arm.

(8) Remove the tool.

(9) If not already installed, install standard zirc-type grease fitting in ball joint.

CAUTION: It is important to lubricate the ball joint before installation of steering knuckle to allow proper venting when the seal is filled. If the ball joint is lubricated after installation to knuckle, damage to the seal can occur.

(10) Using a hand-operated pump grease gun, fill the ball joint seal boot with Mopar® Multi-Mileage Lube or equivalent until grease pushes out past ball joint stem. Wipe off overfill.

(11) Remove standard zirc-type grease fitting and install headless grease fitting from original ball joint to prevent future lubricating. See above Caution. **Be sure to properly clean headless grease fitting prior to installation**.

(12) Install the lower control arm. (Refer to 2 - SUSPENSION/FRONT/LOWER CONTROL ARM - INSTALLATION).

ASSEMBLY - LOWER CONTROL ARM (REAR ISOLATOR BUSHING)

(1) Back the ball joint press C-4212F set screw outward so it does not extend out into the cup area (Fig. 32).

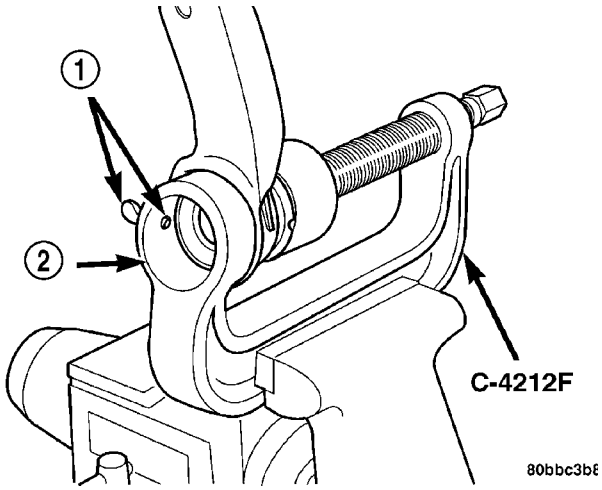

Fig. 32 Set Screw Backed Outward

1 - SET SCREW
2 - CUP AREA

(2) Start the bushing in the lower control arm bushing bore by hand. Position the bushing so the voids in the rubber are aligned in relationship to the ball joint as shown (Fig. 33). Place the larger void toward the ball joint.

(3) Install the Receiver, Special Tool 6760, on the tip of the Ball Joint Press screw drive.

(4) Place the lower control arm flange against the cup area of the ball joint press and tighten the screw-drive until the Receiver contacts the outer circumference of the bushing (Fig. 34). Slowly tighten the screw-drive until the bushing bottoms in the lower control arm bushing bore.

(5) Back off the Ball Joint Press screw-drive and remove the control arm from the press.

(6) Install the lower control arm on the vehicle. (Refer to 2 - SUSPENSION/FRONT/LOWER CONTROL ARM - INSTALLATION)

INSTALLATION - LOWER CONTROL ARM

(1) Position the lower control arm into the crossmember (Fig. 25). Install, but do not fully tighten, the rear pivot bolt attaching the lower control arm to the front suspension crossmember and frame rail. Install, but do not fully tighten, the front pivot bolt attaching the lower control arm to the front suspension crossmember.

LOWER CONTROL ARM (Continued)

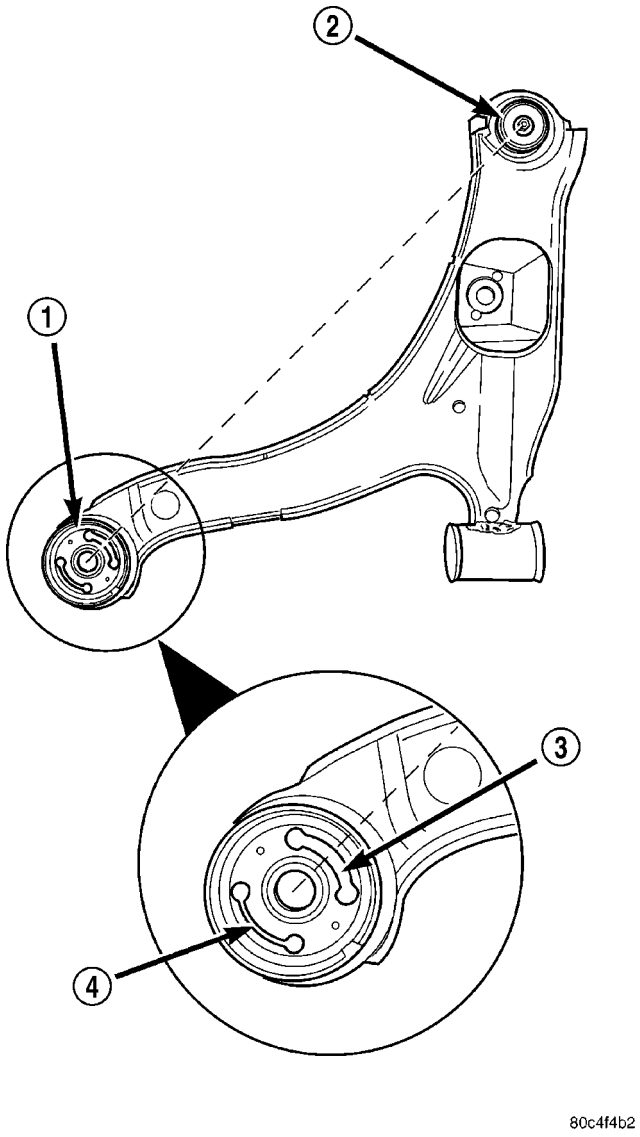

Fig. 33 Aligning Bushing With Ball Joint

1 - REAR ISOLATOR BUSHING
2 - BALL JOINT
3 - WIDE VOID
4 - NARROW VOID

(2) With no weight on the lower control arm, tighten the lower control arm rear pivot (and suspension crossmember) bolt to a torque of 250 N·m (185 ft. lbs.), then tighten the lower control arm front pivot bolt to a torque of 170 N·m (125 ft. lbs.).

(3) Install the ball joint stud into the steering knuckle aligning the bolt hole in the knuckle boss with the notch formed in the side of the ball joint stud.

(4) If the right lower control arm has been serviced, perform the following:

(a) Install the engine torque strut (Fig. 24). To properly align and tighten the torque strut, (Refer to 9 - ENGINE/ENGINE MOUNTING/TORQUE STRUT - ADJUSTMENTS).

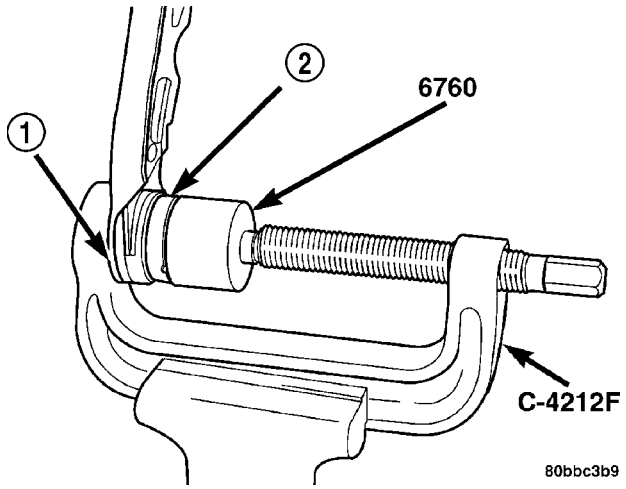

Fig. 34 Installing Bushing

1 - LOWER CONTROL ARM FLANGE
2 - ISOLATOR BUSHING

(b) Install the washer on the end of the stud extending from the torque strut bolt (Fig. 24).

(c) Install the pencil strut to the right front corner of the crossmember and body of the vehicle (Fig. 24). Tighten the pencil strut nuts to a torque of 58 N·m (43 ft. lbs.).

(d) Install the drive-belt splash shield and fasteners (Fig. 23).

(e) Install the screws fastening the front fascia to the reinforcement (Fig. 23).

(5) Install a new ball joint stud pinch bolt and nut (Fig. 22). Tighten the nut to a torque of 95 N·m (70 ft. lbs.).

(6) Rotate the forward ends of the stabilizer bar into mounting position.

(7) Clean the threads of the stabilizer bar link bolts, then apply Mopar® Lock And Seal or equivalent to the threads.

(8) Install both stabilizer bar links back on vehicle (Fig. 21). Start each stabilizer bar link bolt with bushing from the bottom, through the stabilizer bar, inner link bushings, lower control arm, and into the upper retainer/nut and bushing (Fig. 1). Do not fully tighten the link assemblies at this time.

(9) Lower the vehicle to ground level.

NOTE: It may be necessary to put the vehicle on a platform hoist or alignment rack to gain access to the stabilizer bar mounting bolts with the vehicle at curb height.

(10) Tighten each stabilizer bar link by holding the upper retainer/nut with a wrench and turning the link bolt. Tighten each link bolt to a torque of 28 N·m (250 in. lbs.).

LOWER CONTROL ARM (Continued)

(11) If previously loosened, tighten the stabilizer bar cushion retainer bolts to a torque of 28 N·m (250 in. lbs.).

STABILIZER BAR

DESCRIPTION

The stabilizer bar interconnects both front lower control arms of the vehicle and is attached to the front suspension crossmember (Fig. 1) .

Attachment of the stabilizer bar to the front suspension crossmember is through 2 rubber-isolator cushion and retainers (Fig. 1) . The stabilizer bar attachment to the lower control arm is done by utilizing an isolated stabilizer bar link at each arm. All components of the stabilizer bar are serviceable.

OPERATION

The stabilizer bar helps control vehicle body roll. Jounce and rebound movements affecting one wheel are partially transmitted to the opposite wheel of the vehicle through the stabilizer bar.

REMOVAL

NOTE: Before proceeding, (Refer to 2 - SUSPENSION/FRONT - WARNING).

(1) Raise the vehicle. (Refer to LUBRICATION & MAINTENANCE/HOISTING - STANDARD PROCEDURE)

(2) Remove both stabilizer bar links from the vehicle (Fig. 35). Remove each link by holding the upper retainer/nut with a wrench and turning the link bolt.

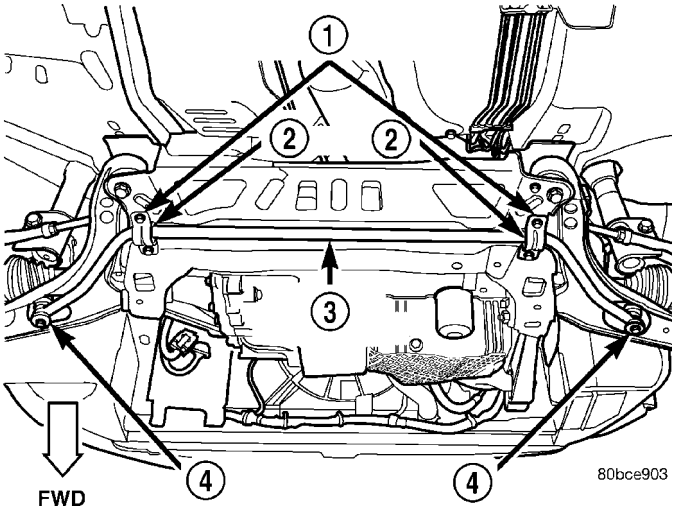

Fig. 35 Stabilizer Bar (Typical)

1 - STABILIZER BAR CUSHION RETAINERS
2 - CUSHIONS
3 - FRONT STABILIZER BAR
4 - STABILIZER BAR LINKS

(3) Remove the stabilizer bar cushion retainer bolts and retainers (Fig. 35), and remove the stabilizer bar with cushions attached from the vehicle.

(4) To remove the cushions from the stabilizer bar, peel back each cushion at the slit and roll it off the bar.

INSPECTION

Inspect for broken, cracked or distorted stabilizer bar cushions and retainers. Inspect for worn or damaged stabilizer bar links (Fig. 1).

INSTALLATION

NOTE: Before stabilizer bar installation, inspect the cushions and links for excessive wear, cracks, damage and distortion. Replace any pieces failing inspection.

(1) If removed, install the stabilizer bar cushions on the stabilizer bar utilizing the slit in each cushion. Position the cushions at each end of the bar's straight beam, just before it begins to curve.

NOTE: Before installing the stabilizer bar, make sure the bar is not upside-down. The stabilizer bar must be installed with the curve on the outboard ends of the bar facing downward to clear the control arms once fully installed (Fig. 36).

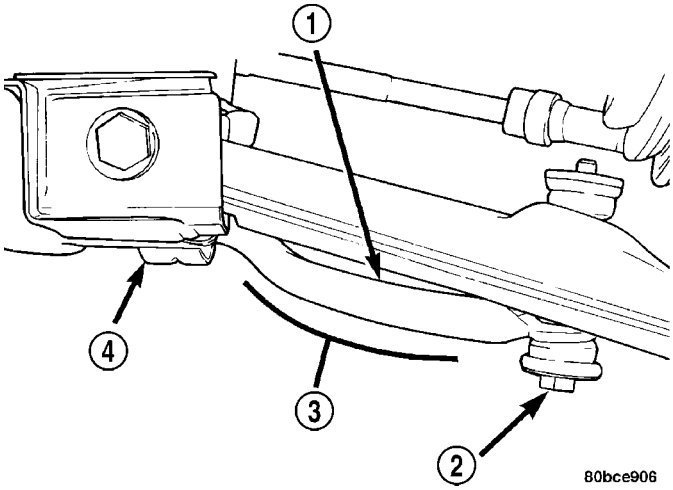

Fig. 36 Downward Curve

1 - STABILIZER BAR
2 - LINK
3 - DOWNWARD CURVE
4 - CUSHION RETAINER

(2) First, place the stabilizer bar in position on the front suspension crossmember. The slits in each cushion must point toward the front of the vehicle and sit directly on top of the raised beads formed into the stamping on the crossmember. Next, install the cushion retainers, matching the raised beads

STABILIZER BAR (Continued)

formed into the cushion retainers to the grooves formed into the cushions. Install the cushion retainer bolts, but do not completely tighten them at this time.

(3) Clean the threads of the stabilizer bar link bolts, then apply Mopar® Lock And Seal or equivalent to the threads.

(4) Install both stabilizer bar links back on vehicle (Fig. 35). Start each stabilizer bar link bolt with bushing from the bottom, through the stabilizer bar, inner link bushings, lower control arm, and into the upper retainer/nut and bushing (Fig. 1). Do not fully tighten the link assemblies at this time.

(5) Lower the vehicle.

NOTE: It may be necessary to put the vehicle on a platform hoist or alignment rack to gain access to the stabilizer bar mounting bolts with the vehicle at curb height.

(6) Tighten each stabilizer bar link by holding the upper retainer/nut with a wrench and turning the link bolt. Tighten each link bolt to a torque of 28 N·m (250 in. lbs.).

(7) Tighten the stabilizer bar cushion retainer bolts to a torque of 28 N·m (250 in. lbs.).

STRUT ASSEMBLY

DESCRIPTION

A Macpherson type design strut assembly is used in place of the front suspension upper control arm and upper ball joint (Fig. 1). The bottom of the strut mounts directly to the steering knuckle using 2 attaching bolts and nuts going through the strut clevis bracket and steering knuckle. The top of the strut mounts directly to the strut tower of the vehicle using the three threaded studs on the strut assemblies upper mount.

The strut assembly includes the following components (Fig. 1):

- Upper mount (rubber isolated)
- Upper spring seat and bearing
- Dust shield
- Jounce bumper
- Coil spring
- Lower spring isolator
- Strut (damper)

Each component is serviced by removing the strut assembly from the vehicle and disassembling it.

Coil springs are rated separately for each corner or side of the vehicle depending on optional equipment and type of vehicle service. If a coil spring requires replacement, be sure that it is replaced with a spring meeting the correct load rating for the vehicle and its specific options.

OPERATION

The strut assembly cushions the ride of the vehicle, controlling vibration, jounce and rebound of the suspension.

The coil spring controls ride quality and maintains proper ride height.

The spring isolators isolate the coil spring at the top and bottom from coming into metal-to-metal contact with the upper mounting seat and the strut.

The jounce bumper limits suspension travel and metal-to-metal contact under full jounce condition.

The strut dampens jounce and rebound motions of the coil spring and suspension.

DIAGNOSIS AND TESTING - STRUT ASSEMBLY (FRONT)

Inspect the strut assembly for the following conditions (Fig. 38):

- Inspect for a damaged or broken coil spring.
- Inspect for a torn or damaged strut assembly dust shield.
- Lift the dust shield and inspect the strut assembly for evidence of fluid running from the upper end of the strut fluid reservoir. (Actual leakage will be a stream of fluid running down the side and dripping off lower end of unit). A slight amount of seepage between the strut shaft and strut shaft seal is not unusual and does not affect performance of the strut assembly.
- Lift the dust shield and inspect the jounce bumper for signs of damage or deterioration.
- Inspect the clearance between the shock tower and the coil spring. Make sure no fasteners are protruding through the shock tower possibly contacting the coil spring and strut. Because of the minimum clearance in this area (Fig. 37), installation of metal fasteners could damage the coil spring coating and lead to a corrosion failure of the spring.

CAUTION: At no time when servicing a vehicle can a sheet metal screw, bolt or other metal fastener be installed into the shock tower to take the place of an original plastic clip. Also, do not drill holes into the front shock tower for the installation of any metal fasteners into the shock tower area indicated (Fig. 37).

REMOVAL

NOTE: Before proceeding, (Refer to 2 - SUSPENSION/FRONT - WARNING).

(1) Raise the vehicle. (Refer to LUBRICATION & MAINTENANCE/HOISTING - STANDARD PROCEDURE)

STRUT ASSEMBLY (Continued)

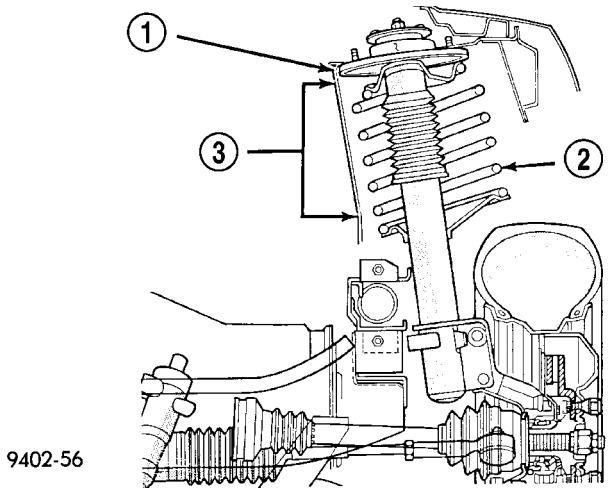

Fig. 37 Shock Tower Area (Typical)

1 - SHOCK TOWER
2 - COIL SPRING
3 - NO SHEET METAL SCREWS, BOLTS, OR ANY OTHER METAL FASTENERS ARE TO BE INSTALLED INTO SHOCK TOWER IN THIS AREA. ALSO, NO HOLES ARE TO BE DRILLED INTO SHOCK TOWER IN THIS SAME AREA.

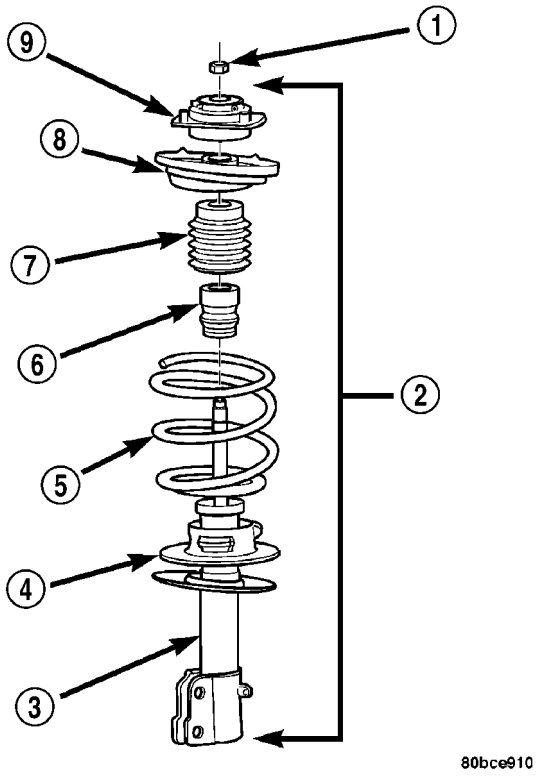

Fig. 38 Strut Assembly

1 - NUT
2 - STRUT ASSEMBLY
3 - STRUT
4 - LOWER SPRING ISOLATOR
5 - COIL SPRING
6 - JOUNCE BUMPER
7 - DUST SHIELD
8 - SPRING SEAT AND BEARING (WITH SPRING ISOLATOR)
9 - UPPER MOUNT

(2) Remove tire and wheel assembly.

(3) If both strut assemblies are to be removed, mark the strut assemblies right or left according to which side of the vehicle they were removed from.

(4) Remove the screw securing the ground strap to the rear of the strut (Fig. 39).

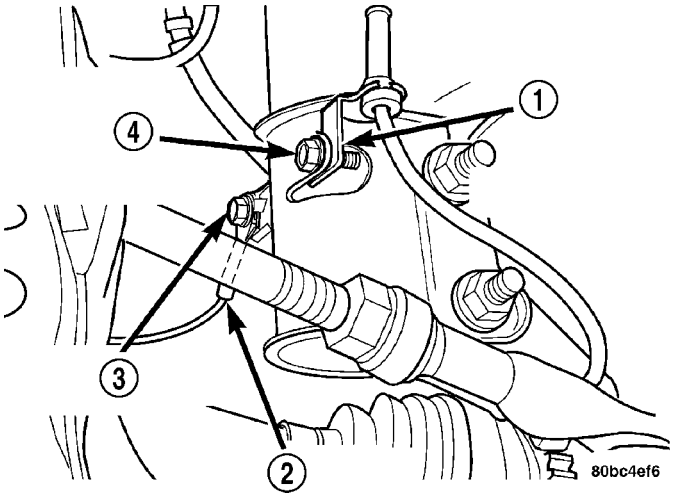

Fig. 39 Ground Strap And ABS Sensor Bracket

1 - ABS WHEEL SPEED SENSOR ROUTING BRACKET (IF EQUIPPED)
2 - GROUND STRAP
3 - GROUND STRAP SCREW
4 - ABS SENSOR BRACKET SCREW (IF EQUIPPED)

(5) If the vehicle is equipped with Antilock brakes (ABS), remove the screw securing the ABS wheel speed sensor to the rear of the strut (Fig. 39).

CAUTION: The strut assembly-to-steering knuckle attaching bolts are serrated and must not be turned during removal. Hold the bolts stationary in the steering knuckle while removing the nuts, then tap the bolts out using a pin punch.

(6) Remove the two bolts attaching the strut to the steering knuckle (Fig. 1).

(7) Lower the vehicle just enough to open the hood, but without letting the tires touch the floor.

(8) Remove the three nuts attaching the upper mount of the strut assembly to the vehicle's strut tower (Fig. 40).

(9) Remove the strut assembly from the vehicle.

(10) For disassembly, (Refer to 2 - SUSPENSION/FRONT/STRUT - DISASSEMBLY).

DISASSEMBLY

The Strut assembly must be removed from the vehicle for it to be disassembled and assembled. (Refer to 2 - SUSPENSION/FRONT/STRUT - REMOVAL)

STRUT ASSEMBLY (Continued)

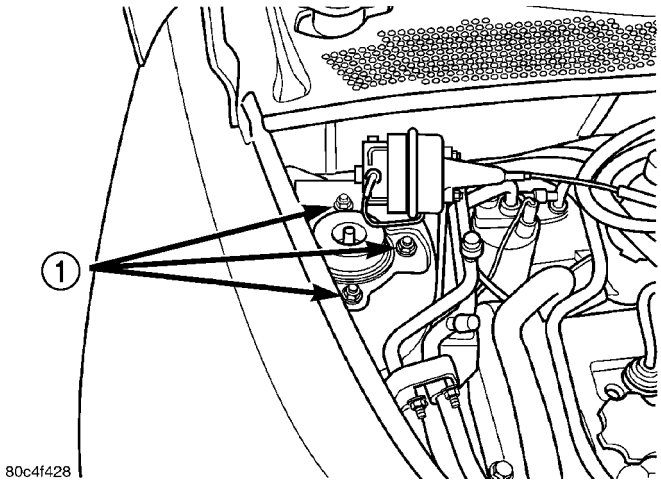

Fig. 40 Upper Mounting Nuts

1 - NUTS

For the disassembly and assembly of the strut assembly, use strut spring compressor, Pentastar Service Equipment (PSE) tool W-7200, or the equivalent, to compress the coil spring. Follow the manufacturer's instructions closely.

(1) If both struts are being serviced at the same time, mark the coil spring and strut assembly according to which side of the vehicle the strut was removed from, and which strut the coil spring was removed from.

(2) Position the strut assembly in the strut coil spring compressor following the manufacturers instructions. Set the lower hooks (Fig. 41), then set the upper hooks (Fig. 42). Position the strut clevis bracket straight outward away from the compressor. Place a clamp on the lower end of the coil spring, so the strut is held in place once the strut shaft nut is removed (Fig. 41).

WARNING: DO NOT REMOVE THE STRUT SHAFT NUT BEFORE THE COIL SPRING IS COMPRESSED. THE COIL SPRING IS HELD UNDER PRESSURE AND MUST BE COMPRESSED, REMOVING SPRING TENSION FROM THE UPPER MOUNT AND PIVOT BEARING, BEFORE THE SHAFT NUT IS REMOVED.

(3) Compress the coil spring until all coil spring tension is removed from the upper mount.

CAUTION: Never use impact or high speed tools to remove the strut shaft nut. Damage to the strut internal bearings may occur.

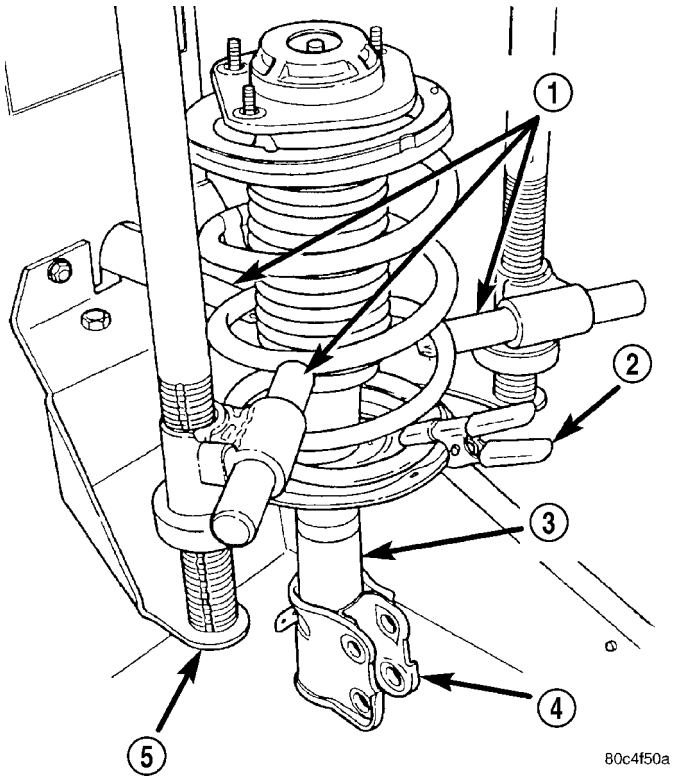

Fig. 41 Strut Assembly In Compressor (Lower)

1 - LOWER HOOKS
2 - CLAMP
3 - STRUT ASSEMBLY
4 - CLEVIS BRACKET
5 - SPRING COMPRESSOR

(4) Once the spring is sufficiently compressed, install Strut Nut Socket, Special Tool 6864, on the strut shaft retaining nut (Fig. 43). Next, install a socket on the hex on the end of the strut shaft. While holding the strut shaft from turning, remove the nut from the strut shaft.

(5) Remove the upper mount from the strut shaft (Fig. 44).

(6) Remove the upper spring seat and bearing, along with the upper spring isolator as an assembly from the top of the coil spring by pulling them straight up (Fig. 44). The upper spring isolator can be separated from the spring seat and bearing once removed from vehicle.

(7) Remove the dust shield, then the jounce bumper from the strut shaft by pulling each straight up (Fig. 44).

(8) Remove the clamp from the bottom of the coil spring and remove the strut out through the bottom of the coil spring.

STRUT ASSEMBLY (Continued)

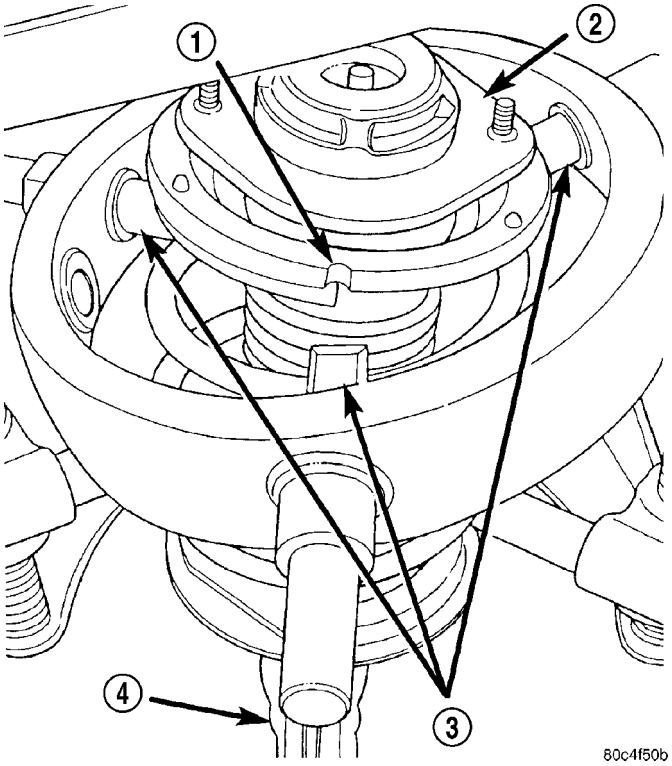

Fig. 42 Strut Assembly In Compressor (Upper)

1 - NOTCH IN UPPER SEAT
2 - UPPER MOUNT
3 - UPPER HOOKS
4 - CLEVIS BRACKET

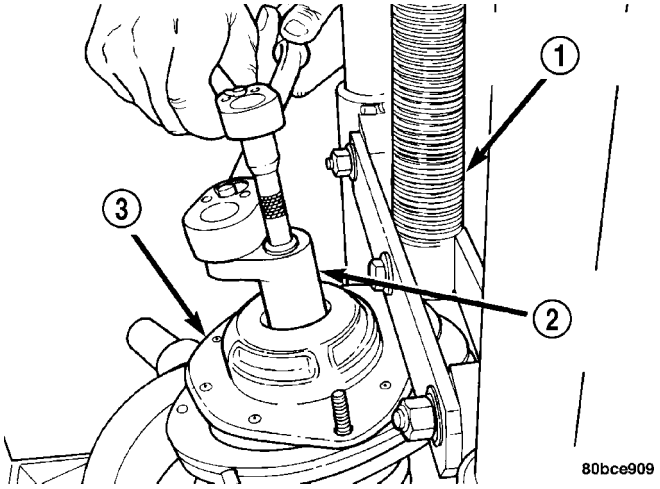

Fig. 43 Shaft Nut Removal/Installation

1 - SPRING COMPRESSOR
2 - SPECIAL TOOL 6864
3 - UPPER MOUNT

(9) Remove the lower spring isolator from the lower spring seat on the strut.

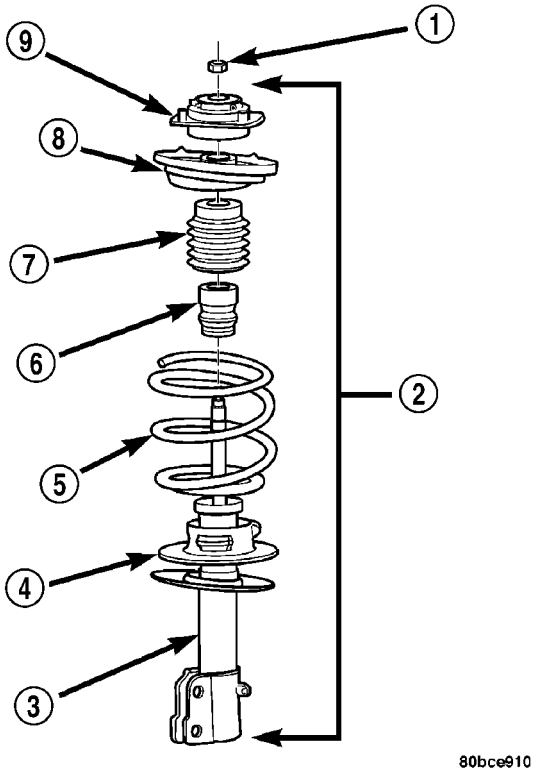

Fig. 44 Strut Assembly Components

1 - NUT
2 - STRUT ASSEMBLY
3 - STRUT
4 - LOWER SPRING ISOLATOR
5 - COIL SPRING
6 - JOUNCE BUMPER
7 - DUST SHIELD
8 - SPRING SEAT AND BEARING (WITH SPRING ISOLATOR)
9 - UPPER MOUNT

NOTE: If the coil spring needs to be serviced, proceed with the next step, otherwise, proceed with step Step 11.

(10) Release the tension from the coil spring by backing off the compressor drive completely. Push back the compressor hooks and remove the coil spring.

(11) Inspect the strut assembly components for the following and replace as necessary:

- Inspect the strut for any condition of shaft binding over the full stroke of the shaft.
- Inspect the jounce bumper for cracks and signs of deterioration.
- Check the upper mount for cracks and distortion and its retaining studs for any sign of damage.
- Check the upper spring seat and bearing for cracks and distortion.
- Check for binding of the upper spring seat and bearing pivot bearing.
- Inspect the dust shield for rips and deterioration.

STRUT ASSEMBLY (Continued)

- Inspect the upper and lower spring isolators for material deterioration and distortion.
- Inspect the coil spring for any sign of damage to the coating.

NOTE: For reassembly, (Refer to 2 - SUSPENSION/ FRONT/STRUT - ASSEMBLY).

ASSEMBLY

NOTE: If the coil spring has been removed from the spring compressor, proceed with the next step, otherwise, proceed with step Step 3.

(1) Place the coil spring in the compressor following the manufacturers instructions. Before compressing the spring, rotate the spring so the end of the top coil is directly in the front as shown (Fig. 45).

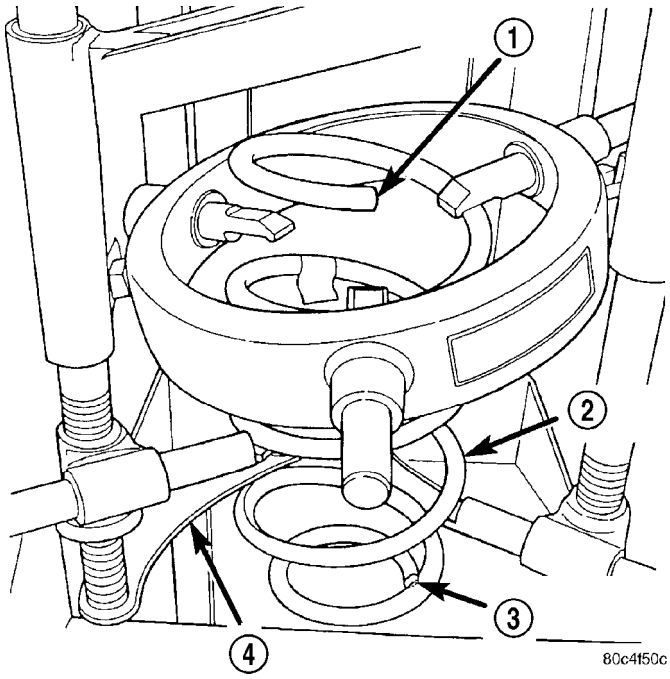

Fig. 45 Upper Coil Spring Positioning

1 - UPPER END OF COIL
2 - COIL SPRING
3 - LOWER END OF COIL
4 - SPRING COMPRESSOR

(2) Slowly compress the coil spring until enough room is available for strut assembly reassembly.

(3) Install the lower spring isolator on the lower spring seat of the strut.

(4) Install the strut through the bottom of the coil spring until the lower spring seat contacts the lower end of the coil spring. Rotate the strut as necessary until the clevis bracket is positioned straight outward away from the compressor (Fig. 41). Install the clamp on the lower end of the coil spring and strut, so the strut is held in place.

(5) Install the jounce bumper on the strut shaft. The jounce bumper is to be installed with the smaller end pointing downward toward the lower seat (Fig. 44).

(6) Install the dust shield on the strut shaft (Fig. 44). The bottom of the dust shield will snap to the retainer on top of the strut housing.

(7) If disassembled, reinstall the upper spring isolator on the upper spring seat and bearing.

(8) Install the upper spring seat and bearing on top of the coil spring. Position the notch formed into the edge of the upper seat straight out away from the compressor (Fig. 42). It should line up with the very end of the coil spring coil.

(9) Install the strut upper mount over the strut shaft and onto the top of the upper spring seat and bearing. Position the mount so that the third mounting stud on the mount top is inward toward the compressor, opposite the clevis bracket.

CAUTION: Never use impact or high speed tools to install the strut shaft nut. Damage to the strut internal bearings may occur.

(10) Loosely install the retaining nut on the strut shaft. Install Strut Nut Socket (on the end of a torque wrench), Special Tool 6864, on the strut shaft retaining nut (Fig. 43). Next, install a socket on the hex on the end of the strut shaft. While holding the strut shaft from turning, tighten the strut shaft retaining nut to a torque of 75 N·m (55 ft. lbs.).

(11) Slowly release the tension from the coil spring by backing off the compressor drive completely. As the tension is relieved, make sure the upper mount and seat and bearing align properly. Verify the upper mount does not bind.

(12) Remove the clamp from the lower end of the coil spring and strut. Push back the spring compressor upper and lower hooks, then remove the strut assembly from the spring compressor.

(13) Install the strut assembly on the vehicle. (Refer to 2 - SUSPENSION/FRONT/STRUT - INSTALLATION)

INSTALLATION

(1) Install the strut assembly into the strut tower, aligning the three studs on the strut upper mount with the holes in strut tower. Install the three mounting nuts on the studs (Fig. 40). Tighten the three nuts to a torque of 34 N·m (25 ft. lbs.).

(2) Close the hood of the vehicle.

STRUT ASSEMBLY (Continued)

CAUTION: The strut assembly-to-steering knuckle attaching bolts are serrated and must not be turned during installation. Install the nuts while holding the bolts stationary in the steering knuckle.

(3) Position the lower end of the strut assembly in line with the upper end of the steering knuckle and align the mounting holes (Fig. 1). Install the two attaching bolts. The bolts should be installed so that the nuts face towards the front of the vehicle once installed. Install the nuts. Holding the bolts in place tighten the nuts to a torque of 53 N·m (40 ft. lbs.) plus an additional 90° turn after the specified torque is met.

(4) If the vehicle is equipped with Antilock brakes (ABS), attach the ABS wheel speed sensor to the rear of the strut (rearward ear) using its mounting screw (Fig. 39). Tighten the mounting screw to a torque of 13 N·m (120 in. lbs.).

(5) Attach the ground strap to the rear of the strut (forward ear) using its mounting screw (Fig. 39). Tighten the mounting screw to a torque of 13 N·m (120 in. lbs.).

(6) Install the tire and wheel assembly. Install and tighten the wheel mounting nuts in proper sequence until all nuts are torqued to half specification. Next, repeat the tightening sequence to the full specified torque of 135 N·m (100 ft. lbs.).

(7) Lower the vehicle.

REAR SUSPENSION

TABLE OF CONTENTS

	page
REAR SUSPENSION	
DESCRIPTION - REAR SUSPENSION	26
OPERATION - REAR SUSPENSION	26
WARNING	
WARNINGS AND CAUTIONS	27
SPECIFICATIONS	
REAR SUSPENSION FASTENER TORQUE	28
SPECIAL TOOLS	
REAR SUSPENSION	28
AXLE - FRONT WHEEL DRIVE REAR	
DESCRIPTION	29
OPERATION	29
REMOVAL	29
INSPECTION	33
INSTALLATION	33
AXLE PIVOT BUSHING	
REMOVAL	37
INSTALLATION	38
HUB / BEARING	
DESCRIPTION	39
OPERATION	39
DIAGNOSIS AND TESTING - HUB AND BEARING (REAR)	39
REMOVAL	40
INSTALLATION	41
JOUNCE BUMPER	
REMOVAL	41
INSTALLATION	41
SHOCK ABSORBER	
DESCRIPTION	41
DIAGNOSIS AND TESTING - SHOCK ABSORBER	41
REMOVAL	41
INSTALLATION	41
SPINDLE	
REMOVAL	42
INSTALLATION	43
SPRING	
DESCRIPTION	44
REMOVAL	44
INSTALLATION	45
STABILIZER BAR	
DESCRIPTION	47
OPERATION	47
REMOVAL	47
INSTALLATION	47
STABILIZER BAR CUSHIONS	
REMOVAL	47
INSTALLATION	48
STABILIZER BAR LINK	
REMOVAL	48
INSTALLATION	48
WATTS LINK ASSEMBLY	
DESCRIPTION	48
OPERATION	49
DIAGNOSIS AND TESTING - WATTS LINK ASSEMBLY	49
WATTS BELL CRANK	
REMOVAL	49
INSTALLATION	49
WATTS LINK	
REMOVAL	51
INSTALLATION	51

REAR SUSPENSION

DESCRIPTION - REAR SUSPENSION

The rear suspension design on this vehicle uses coil springs mounted above a twist beam axle assembly (Fig. 1).

The rear suspension consists of these major components:

- Axle
- Coil spring (2)
- Hub and bearing (2)
- Jounce bumper (2)
- Shock absorber (2)
- Spindle (2)
- Stabilizer bar (Fig. 2)
- Watts link assembly

Refer to individual components for additional information.

OPERATION - REAR SUSPENSION

The rear suspension is designed to handle the various load requirements of the vehicle. As the vehicle moves along traversing bumps and dips, the suspension moves up and down to compensate, allowing for a comfortable, steady ride.

Refer to individual components for additional information.

REAR SUSPENSION (Continued)

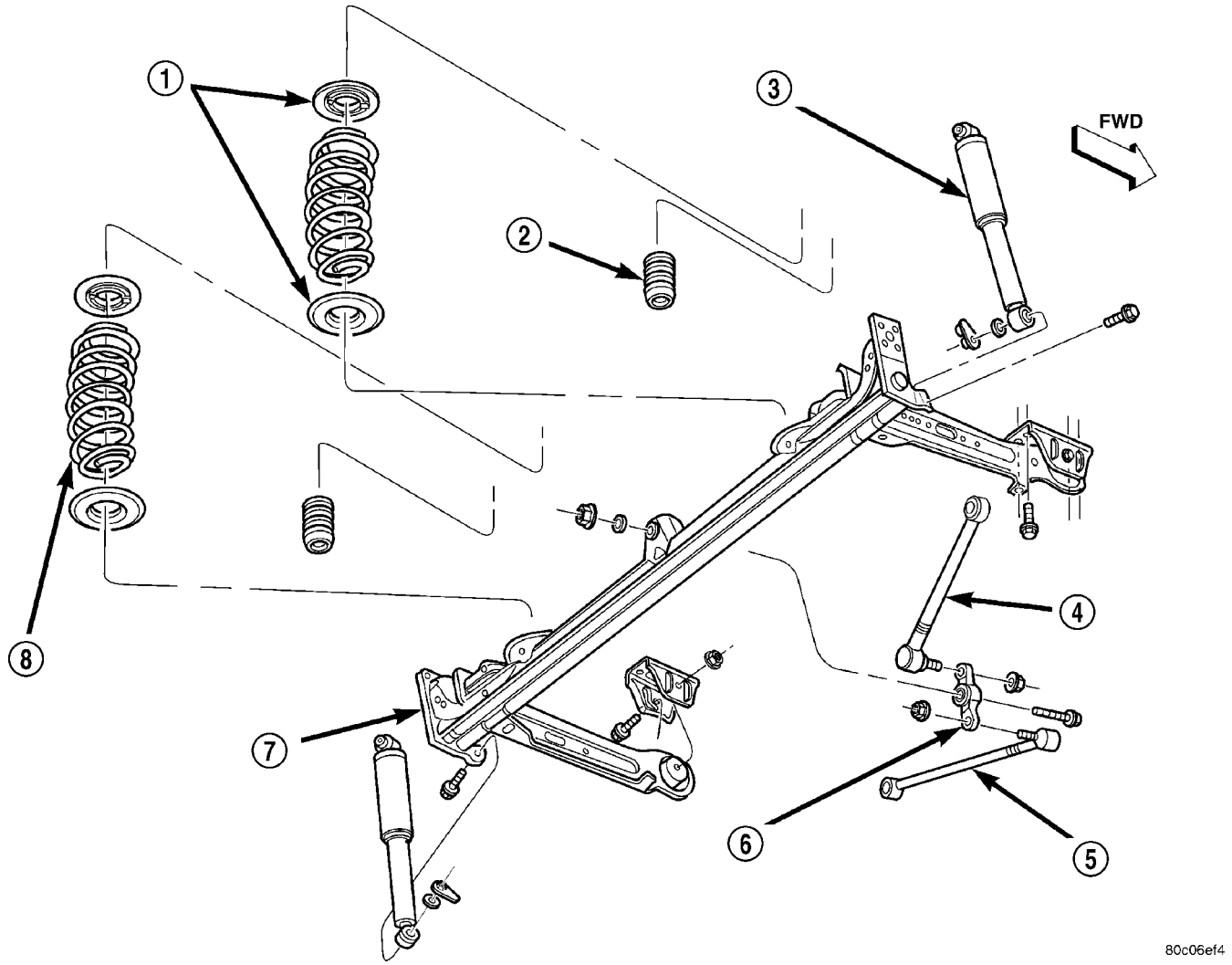

Fig. 1 Rear Suspension System

1 - ISOLATORS
2 - JOUNCE BUMPER
3 - SHOCK ABSORBER
4 - WATTS LINK (UPPER)
5 - WATTS LINK (LOWER)
6 - BELL CRANK
7 - AXLE
8 - COIL SPRING

WARNING

WARNINGS AND CAUTIONS

WARNING: DUST AND DIRT ACCUMULATING ON BRAKE PARTS DURING NORMAL USE MAY CONTAIN ASBESTOS FIBERS FROM PRODUCTION OR AFTERMARKET LININGS. BREATHING EXCESSIVE CONCENTRATIONS OF ASBESTOS FIBERS CAN CAUSE SERIOUS BODILY HARM. EXERCISE CARE WHEN SERVICING BRAKE PARTS. DO NOT SAND, OR GRIND BRAKE LINING UNLESS EQUIPMENT USED IS DESIGNED TO CONTAIN THE DUST RESIDUE. DO NOT CLEAN BRAKE PARTS WITH COMPRESSED AIR OR BY DRY BRUSHING. CLEANING SHOULD BE DONE BY DAMPENING THE BRAKE COMPONENTS WITH A FINE MIST OF WATER, THEN WIPING THE BRAKE COMPONENTS CLEAN WITH A DAMPENED CLOTH. DISPOSE OF CLOTH AND ALL RESIDUE CONTAINING ASBESTOS FIBERS IN AN IMPERMEABLE CONTAINER WITH THE APPROPRIATE LABEL. FOLLOW PRACTICES PRESCRIBED BY THE OCCUPATIONAL SAFETY AND HEALTH ADMINISTRATION (OSHA) AND THE ENVIRONMENTAL PROTECTION AGENCY (EPA) FOR THE HANDLING, PROCESSING, AND DISPOSITION OF DUST OR DEBRIS THAT MAY CONTAIN ASBESTOS FIBERS.

REAR SUSPENSION (Continued)

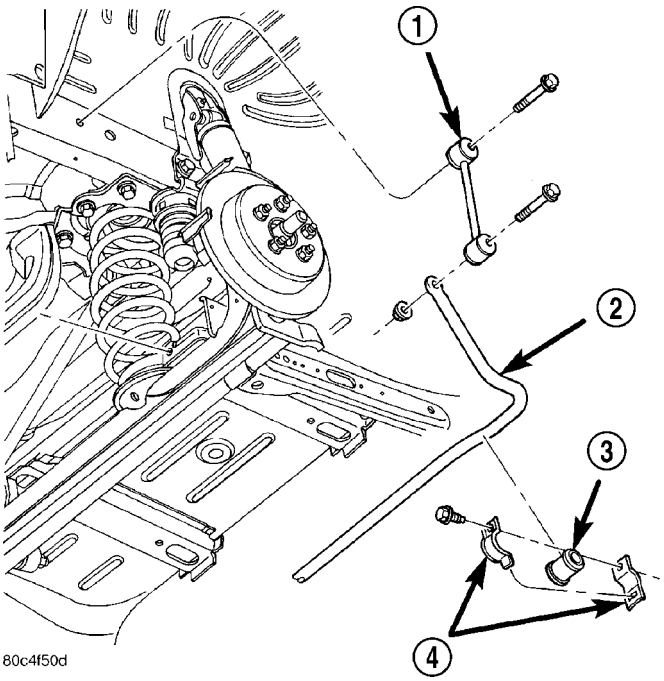

Fig. 2 Stabilizer Bar

1 - LINK
2 - STABILIZER BAR
3 - CUSHION
4 - RETAINER

CAUTION: Only frame contact or wheel lift hoisting equipment can be used on this vehicle. It cannot be hoisted using equipment designed to lift a vehicle by the rear axle. If this type of hoisting equipment is used, damage to rear suspension components will occur.

NOTE: If a rear suspension component becomes bent, damaged or fails, no attempt should be made to straighten or repair it. Always replace it with a new component.

SPECIFICATIONS

REAR SUSPENSION FASTENER TORQUE

DESCRIPTION	N·m	Ft. Lbs.	In. Lbs.
Axle Bracket-to-Body Bolts	54	40	—
Axle Brake/Spindle Bolts	95	70	—
Axle Parking Brake Cable Bracket Bolts	11	—	100
Axle Trailing Arm Pivot Bolt	122	90	—
Hub (To Spindle) Nut	217	160	—
Shock Absorber Lower Mounting Bolt	88	65	—
Shock Absorber Upper Mounting Bolt	99	73	—
Stabilizer Bar Cushion Retainer Bolt	61	45	—
Stabilizer Bar Link Bolts And Nuts	65	48	—
Watts Link Bell Crank Pivot Bolt	149	110	—
Watts Link Ball Joint Nut	14 + 180° Turn	10 + 180° Turn	—
Watts Link Body Bracket Bolt	92	68	—
Wheel Mounting (Lug) Nuts	135	100	—

SPECIAL TOOLS

REAR SUSPENSION

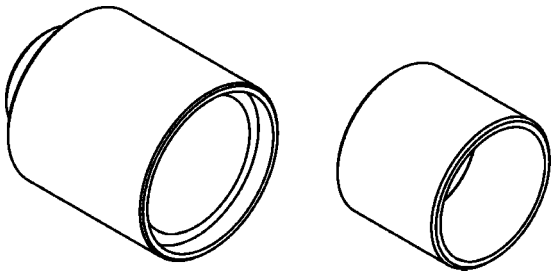

Remover/Installer 8405

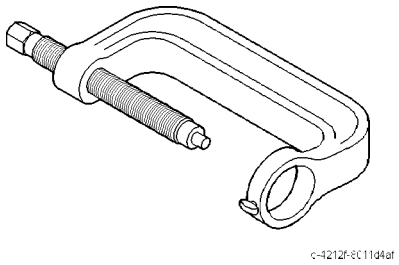

Press, Ball Joint C-4212F

AXLE - FRONT WHEEL DRIVE REAR

DESCRIPTION

The steel rear axle on this vehicle is a twist beam design (Fig. 1) . It has a tubular torsion tube running through the center of its width. It also has two trailing arms, one extending from each end of the axle forward. Each trailing arm has a rubber pivot bushing pressed into it. Two coil spring perches are mounted to its top surface in line with the rear wheel center.

OPERATION

The rear axle pivots at the forward end of the trailing arms through the bushings. Coil springs mounted on top of the axle support the trailing end. As the rear wheels attached to each end of the axle (through spindles) move over bumps and dips, the axle moves with the wheels, pivoting at the front while exerting varying force against the coil springs.

The torsion tube running through the center of the axle's width acts as an integral tubular stabilizer bar. Jounce and rebound movements affecting one rear wheel are partially transferred to the opposite wheel to help stabilize body roll.

REMOVAL

WARNING: THE AUTOMATIC ADJUSTING FEATURE OF THIS PARKING BRAKE LEVER CONTAINS A CLOCKSPRING LOADED TO APPROXIMATELY 19 POUNDS. DO NOT RELEASE THE AUTOMATIC ADJUSTER LOCKOUT DEVICE UNLESS THE REAR PARKING BRAKE CABLES AND EQUALIZER ARE CONNECTED TO THE LEVER OUTPUT CABLE. KEEP HANDS OUT OF AUTOMATIC ADJUSTER SECTOR AND PAWL AREA. FAILURE TO OBSERVE CAUTION IN HANDLING THIS MECHANISM COULD LEAD TO SERIOUS INJURY.

WARNING: WHEN REPAIRS TO THE PARKING BRAKE LEVER OR CABLES ARE REQUIRED, THE AUTOMATIC ADJUSTER MUST BE LOADED AND LOCKED OUT TO AVOID POSSIBLE INJURY. THE LEVER ADJUSTMENT MECHANISM CAN BE LOADED AND LOCKED OUT AS OUTLINED IN THIS PROCEDURE.

WARNING: THE AIRBAG SYSTEM IS A COMPLEX ELECTROMECHANICAL UNIT. BEFORE ATTEMPTING TO SERVICE ANY COMPONENT NEAR THE OCCUPANT RESTRAINT CONTROLLER (ORC), FIRST DISCONNECT AND ISOLATE THE BATTERY NEGATIVE CABLE. ALLOW THE SYSTEM CAPACITOR TO DISCHARGE FOR TWO (2) MINUTES. FAILURE TO DO THIS COULD RESULT IN ACCIDENTAL AIRBAG DEPLOYMENT AND POSSIBLE PERSONAL INJURY.

NOTE: Before proceeding, (Refer to 2 - SUSPENSION/REAR - WARNING).

(1) Unclip the air cleaner cover (two clips) and move the cover aside.

(2) Disconnect and isolate the battery negative cable from its post on the battery.

(3) Block the tire and wheels so the vehicle does not move once the vehicle parking brake lever is released.

(4) Remove the transmission shift knob as necessary.

(5) Remove the screws attaching the center console, then remove the center console.

(6) Grasp the parking brake lever output cable by hand and pull upward. Continue pulling on the cable until an appropriate sized pin punch (drill bit or locking pin) can be inserted sufficiently through the hole in the left side of the lever mounting bracket (Fig. 3). This will lock the parking brake automatic adjustment mechanism in place and take tension off the parking brake cables. Slowly release the output cable. There should now be slack in the cables.

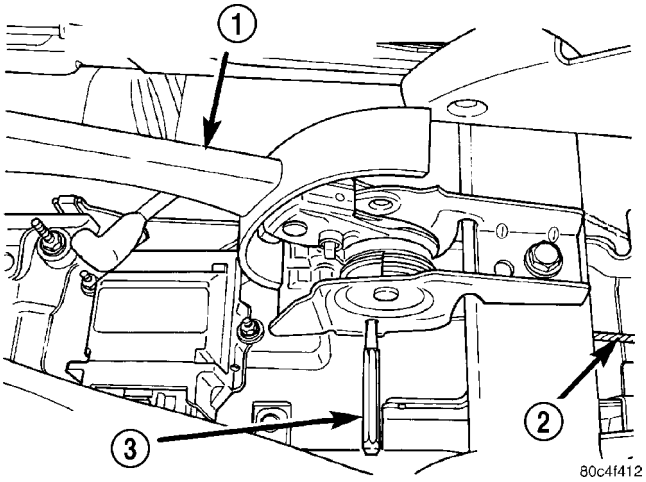

Fig. 3 Pin Punch Installed

1 - PARKING BRAKE LEVER
2 - OUTPUT CABLE
3 - PIN PUNCH

(7) Remove the rear parking brake cables from the parking brake cable equalizer (Fig. 4).

(8) Raise the vehicle. (Refer to LUBRICATION & MAINTENANCE/HOISTING - STANDARD PROCEDURE)

(9) Remove both rear tire and wheel assemblies from the vehicle.

AXLE - FRONT WHEEL DRIVE REAR (Continued)

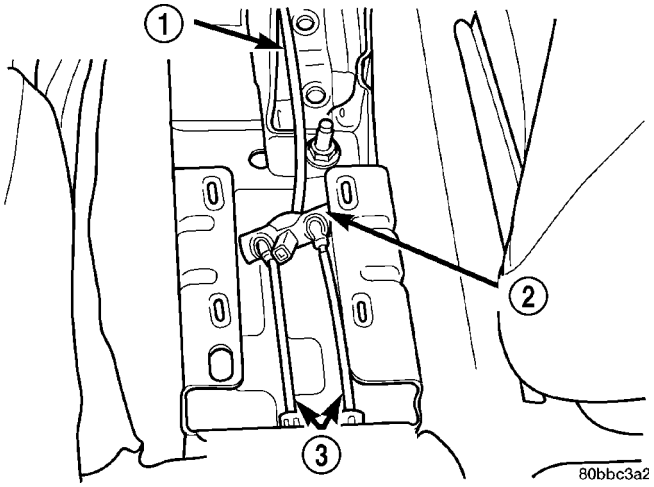

Fig. 4 Parking Brake Cables At Equalizer

1 - LEVER OUTPUT CABLE
2 - EQUALIZER
3 - REAR PARKING BRAKE CABLES

(10) On vehicles equipped with rear drum brakes:

(a) Remove the bolts securing the drum brake flex hoses to the axle trailing arms.

(b) Remove the brake drum retaining clips, then the drums (Fig. 5).

(11) On vehicles equipped with rear disc brakes:

(a) Remove the bolts securing the disc brake flex hoses to the axle trailing arms.

(b) Remove the disc brake caliper guide pin bolts, then the calipers from the disc brake adapters (Fig. 6).

(c) Hang the calipers out of the way using a wire hanger or bungee cord.

(d) Remove the brake rotor from the rear hub and bearing.

(12) Remove the dust cap from the rear hub and bearing (Fig. 5).

(13) Remove the hub and bearing retaining nut from the spindle, then remove the hub and bearing (Fig. 5).

(14) On vehicles equipped with rear disc brakes, remove the upper return spring, both shoe hold-down clips, then spread the rear parking brake shoes apart at the top enough to clear the shoe anchor and remove the parking brake shoes as an assembly from the disc brake adapter (Fig. 7).

(15) On vehicles equipped with rear drum brakes, to remove the parking brake cables from the brake support plates:

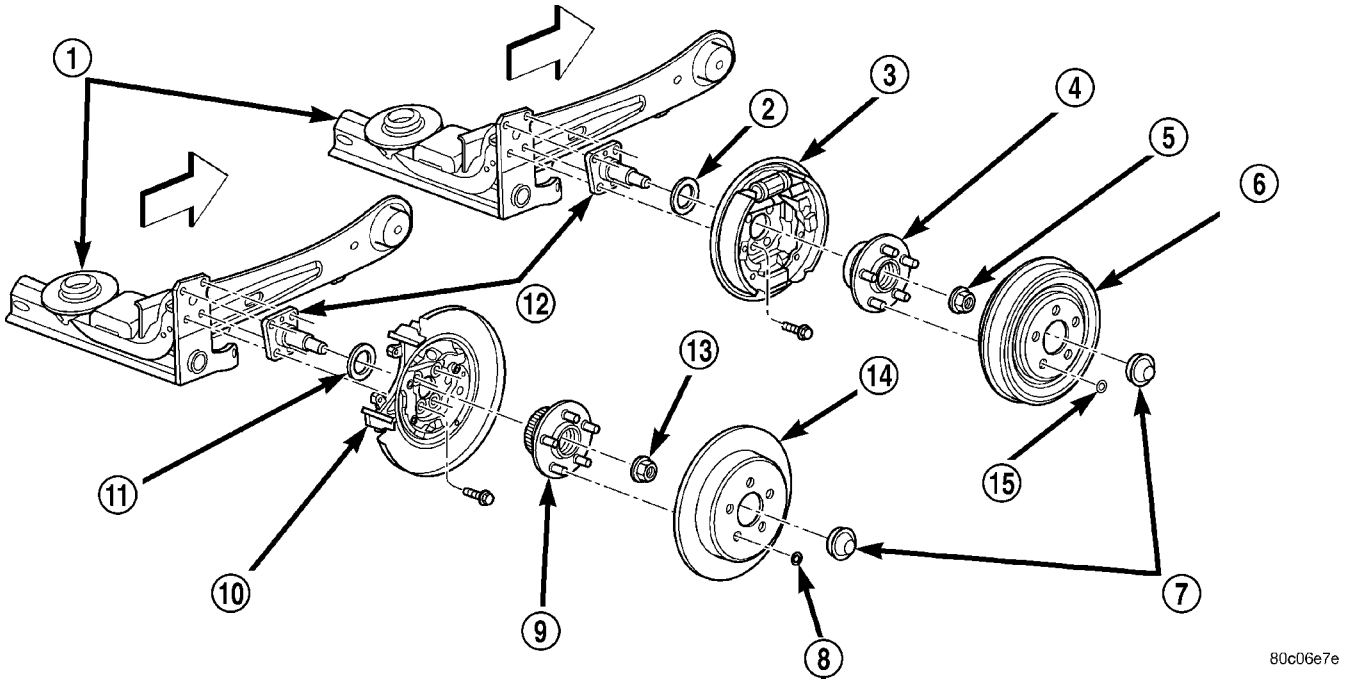

Fig. 5 Rear Brake Mounting To Axle

1 - AXLE
2 - SEAL
3 - DRUM BRAKE WITH SUPPORT PLATE
4 - HUB AND BEARING
5 - HUB NUT
6 - BRAKE DRUM
7 - DUST CAP
8 - RETAINER CLIP
9 - HUB AND BEARING
10 - DISC BRAKE ADAPTER
11 - SEAL
12 - SPINDLE
13 - HUB NUT
14 - BRAKE ROTOR
15 - RETAINER CLIP

AXLE - FRONT WHEEL DRIVE REAR (Continued)

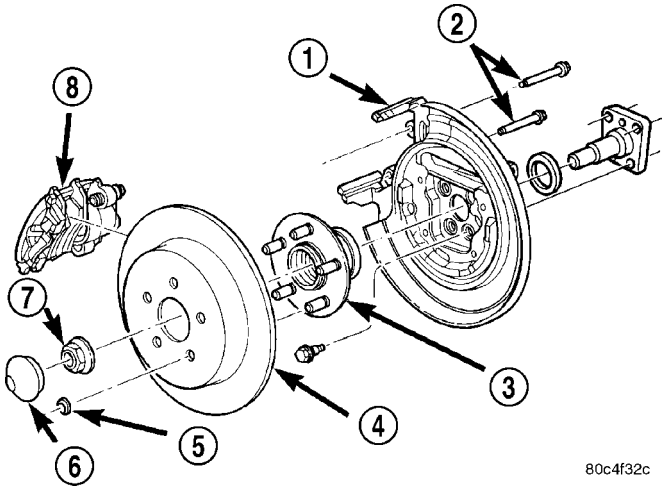

Fig. 6 Rear Disc Brakes

1 - DISC BRAKE ADAPTER
2 - GUIDE PIN BOLTS
3 - HUB AND BEARING
4 - BRAKE ROTOR
5 - RETAINER CLIP
6 - DUST CAP
7 - NUT
8 - DISC BRAKE CALIPER

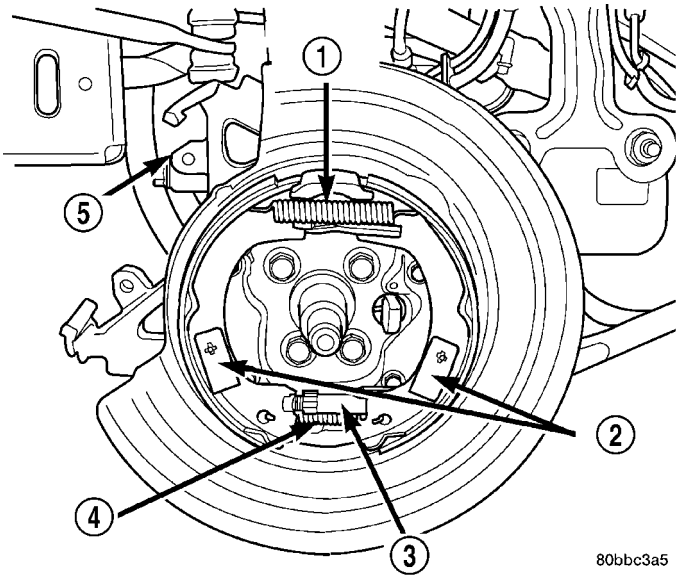

Fig. 7 Parking Brake Shoes

1 - UPPER RETURN SPRING
2 - SHOE HOLD DOWN CLIPS
3 - ADJUSTER
4 - LOWER REAR SPRING
5 - DISC BRAKE ADAPTER

(a) Remove the parking brake cable from the parking brake actuating lever (Fig. 8).

(b) Remove the actuating spring between the brake shoe adjustment lever and the brake shoe (Fig. 9).

(c) Remove the parking brake cable from the rear brake support plate. The parking brake cable can be removed from brake support plate using a ½ inch box wrench to compress the locking fingers on the parking brake cable retainer (Fig. 10).

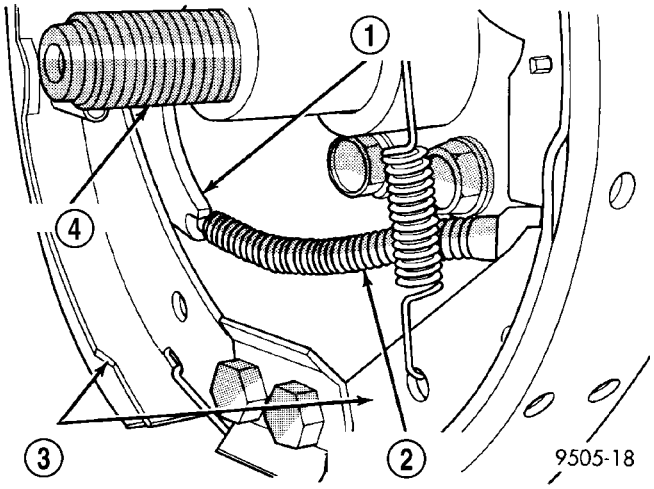

Fig. 8 Actuator Lever

1 - PARK BRAKE ACTUATING LEVER
2 - PARK BRAKE CABLE
3 - BRAKE SHOE ASSEMBLIES
4 - REAR SPINDLE

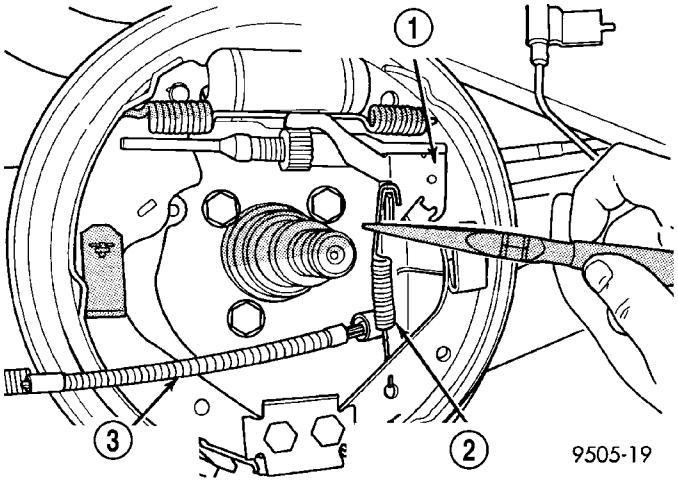

Fig. 9 Actuating Spring

1 - BRAKE SHOE ADJUSTMENT LEVER
2 - ADJUSTMENT LEVER ACTUATING SPRING
3 - PARK BRAKE CABLE

AXLE - FRONT WHEEL DRIVE REAR (Continued)

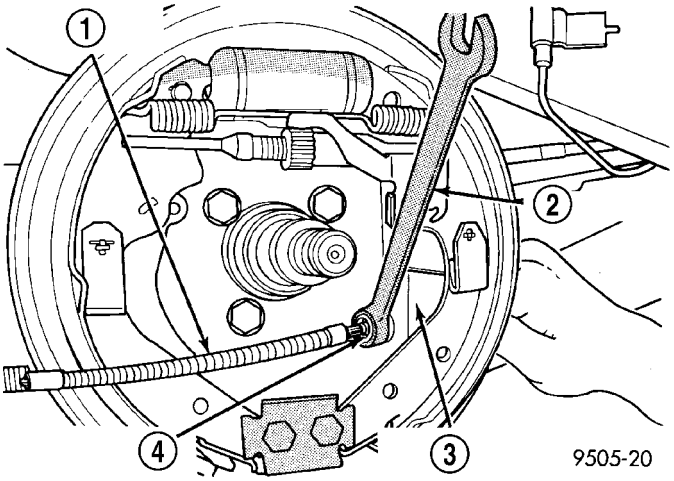

Fig. 10 Parking Brake Cable Removal

1 - PARK BRAKE CABLE
2 - 1/2'' WRENCH
3 - REAR BRAKE SUPPORT PLATE
4 - PARK BRAKE CABLE RETAINER

(16) To remove the parking brake cable from the disc brake adapter on vehicles equipped with rear disc brakes:

(a) Remove the parking brake actuating lever from the parking brake cable (Fig. 11).

(b) Remove the parking brake cable from the rear disc brake adapter. The parking brake cable can be removed from the disc brake adapter using a ½ inch offset box wrench to compress the locking fingers on the parking brake cable retainer (Fig. 12).

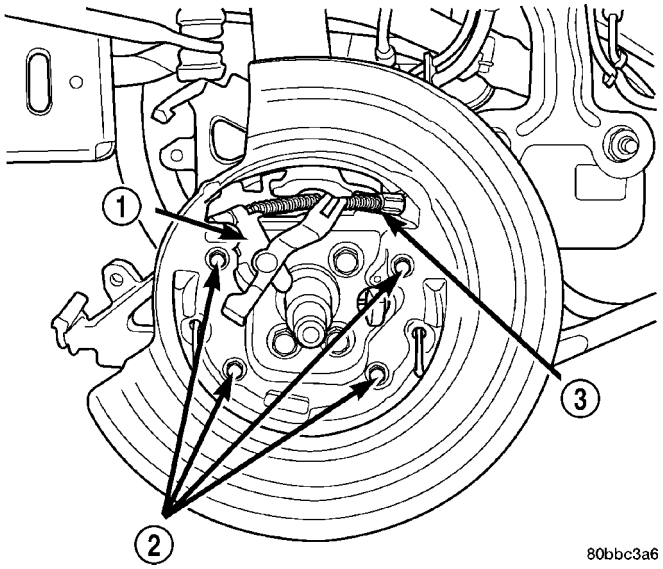

Fig. 11 Parking Brake Actuator Lever

1 - SHOE ACTUATOR LEVER
2 - SHIELD MOUNTING SCREWS
3 - REAR PARKING BRAKE CABLE

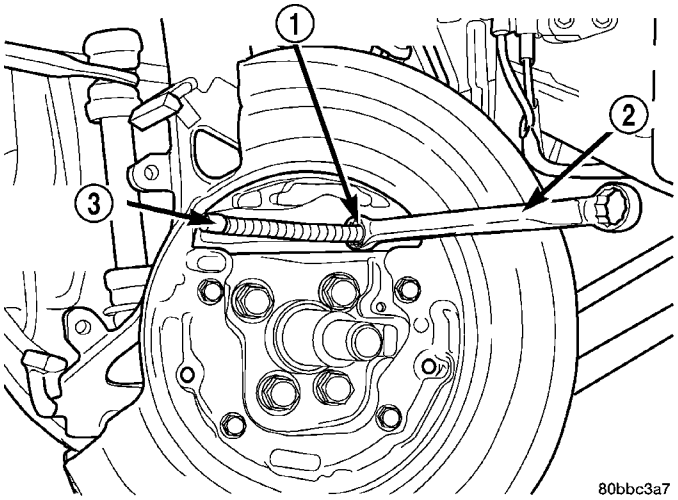

Fig. 12 Parking Brake Cable Removal

1 - CABLE RETAINER
2 - OFFSET BOX WRENCH
3 - PARKING BRAKE CABLE

(17) Remove the two bolts on each axle trailing arm securing the cable and routing brackets to the arm (Fig. 13).

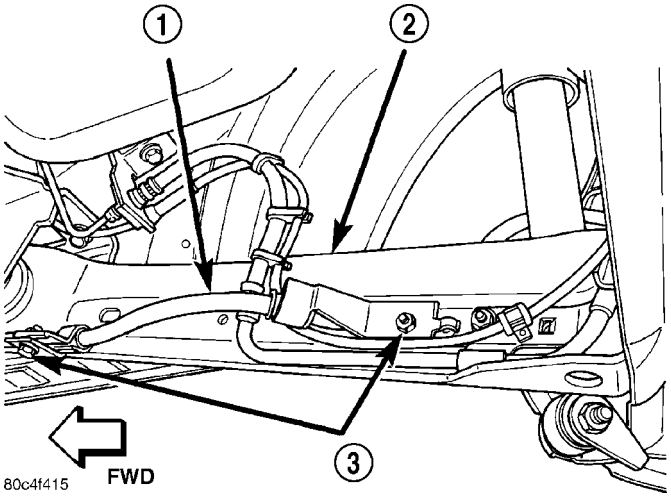

Fig. 13 Cable Routing Bracket Fasteners

1 - CABLE
2 - ARM
3 - FASTENERS

(18) Pull cable through hole in trailing arm.

(19) On vehicles equipped with antilock brakes, remove the bolts securing the wheel speed sensors to the disc brake adapters (Fig. 14). Remove the sensors from the adapters.

(20) Remove the four bolts securing each brake shoe support plate (drum brakes) or disc brake adapter, and spindle to the axle (Fig. 5).

AXLE - FRONT WHEEL DRIVE REAR (Continued)

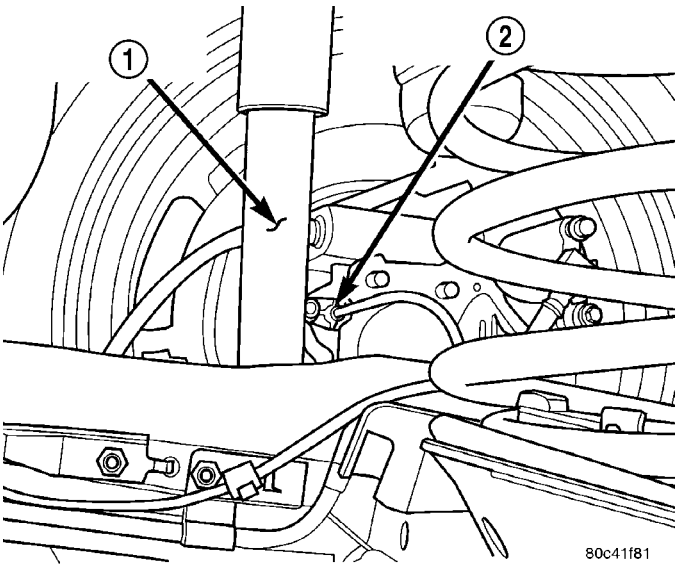

Fig. 14 Wheel Speed Sensor

1 - SHOCK ABSORBER
2 - RIGHT REAR WHEEL SPEED SENSOR

(21) On each side of the vehicle, remove the support plate or disc brake adapter, and the spindle from the axle. Hang the support plate out of the way using a wire hanger or bungee cord.

(22) Remove the bolt securing the watts link bell crank to the center of the axle (Fig. 15).

(23) If equipped with a rear stabilizer bar, remove the bolts securing the stabilizer bar cushion retainers to the rear axle (Fig. 16), then remove the stabilizer bar from the axle.

(24) Position a transmission jack or equivalent under the center of the axle raising it enough to support the axle.

(25) Remove the shock absorber lower mounting bolts and nuts at the axle (Fig. 15).

(26) Lower the transmission jack until the coil springs can be removed from the axle.

(27) Remove the coil springs and rubber isolators (Fig. 15).

(28) Using an awl, scribe a line marking the location of the axle trailing arm bracket, side-to-side and front-to-rear, on the body of the vehicle (Fig. 17).

(29) Remove the bolts securing the trailing arm forward brackets to the body of the vehicle.

(30) Remove the axle from the vehicle.

(31) To remove the trailing arm forward brackets from the axle, remove the thru-bolts.

INSPECTION

Verify proper torque of all axle fasteners.

Inspect the axle looking for damage or bending. If damage is evident, the axle must be replaced.

Inspect for broken or cracked welds at each end of the twist beam within the axle. Inspect for broken or cracked welds at each axle trailing arm bushing bore. If a problem is present, the axle must be replaced.

Inspect the bushings at the leading ends of the axle trailing arms. Look for damage or deterioration of the bushings. Make sure the bushings are centered side-to-side in their bore. If a problem exists, the bushings must be replaced. They can be replaced separately from the axle.

INSTALLATION

(1) If removed, install the trailing arm forward brackets on each side of the axle in the following way:

(a) From above the axle, place the bracket down over the axle trailing arm bushing aligning the hole in the bracket with the center hole in the bushing (Fig. 15).

(b) From the outboard side of the axle and bracket, push the thru-bolt through the bracket and bushing. **The trailing arm bracket thru-bolts must be installed from the outside, in toward the center of the axle assembly, otherwise the bolt threaded ends will come in contact with the body of the vehicle upon axle installation on vehicle.**

(c) Install the nut on the inboard end of the nut. Tighten the nut until the bracket has resistance when turned, but still moves independent of the axle bushing. It must be fully tightened later, once the vehicle is at curb height.

(2) Center the axle beam on the transmission jack standing at axle removal height.

(3) Swing the trailing arms up aligning the brackets with the scribed marks made upon removal (Fig. 17), then install all eight mounting bolts (four per side). Thread the bolts in, but do not fully tighten.

(4) Tap the axle trailing arm brackets as necessary to align the brackets to the scribed marks, then tighten the bolts to a torque of 54 N·m (40 ft. lbs.).

(5) Install a rubber isolator on each end of the coil springs wrapping the rubber fingers around the coil (Fig. 18). Turn the isolators until the rubber abutment butts up against the flat end of the spring coil.

AXLE - FRONT WHEEL DRIVE REAR (Continued)

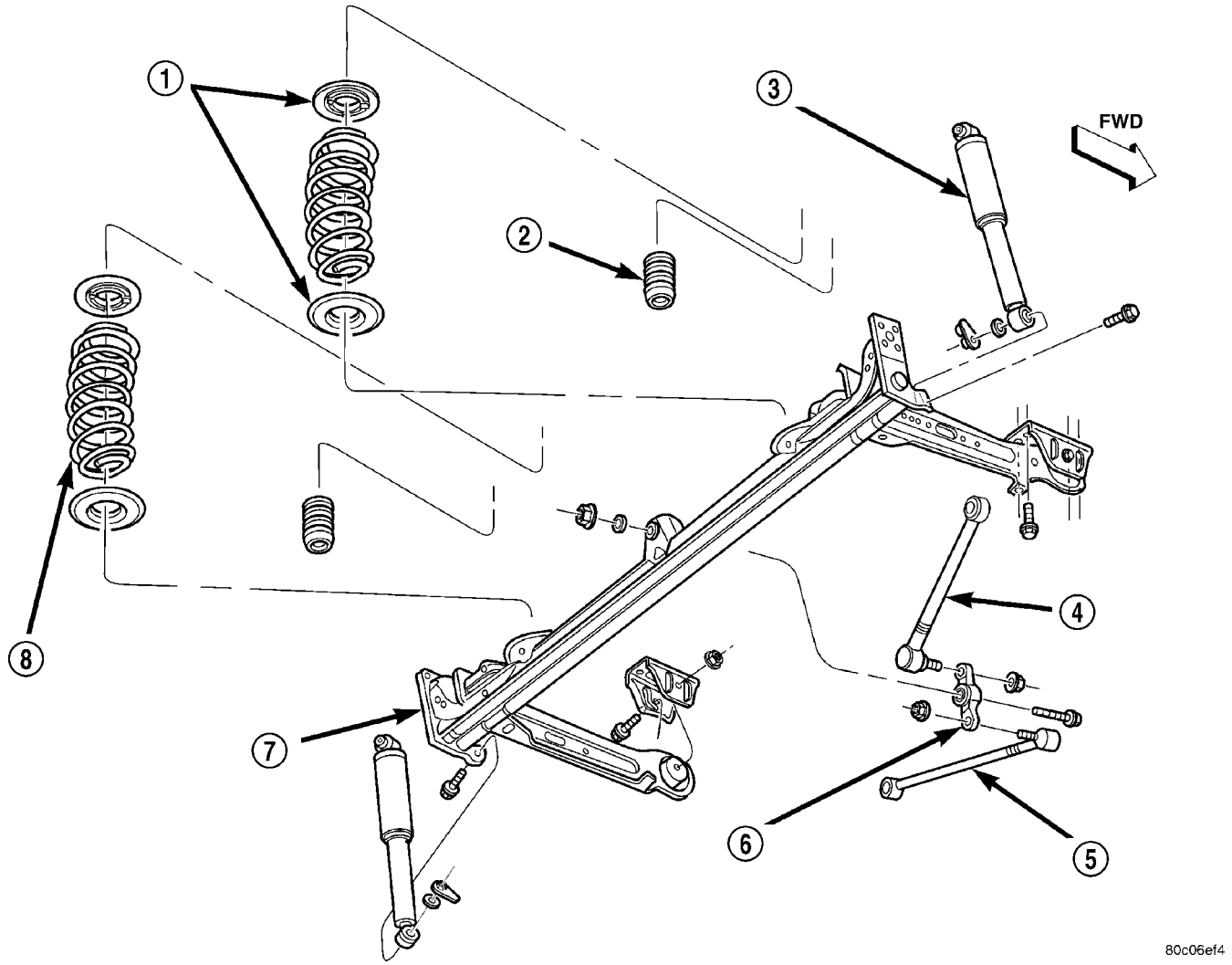

Fig. 15 Rear Suspension

1 - ISOLATORS
2 - JOUNCE BUMPER
3 - SHOCK ABSORBER
4 - WATTS LINK (UPPER)
5 - WATTS LINK (LOWER)
6 - BELL CRANK
7 - AXLE
8 - COIL SPRING

NOTE: Both ends of the coil spring are identical. Either end of the spring can be the top or bottom.

(6) Place the coil springs on top of the axle spring perches.

(7) The coil springs require proper orientation to the body when installed. To do this, turn the coil springs (along with the rubber isolators) until the flat end of each upper spring coil lines up with an imaginary line running parallel with the axle beam as shown (Fig. 19). Also, make sure that the upper coils end near the outboard sides of the vehicle and not 180 degrees of that location.

(8) Raise the transmission jack guiding the coil springs into the spring mounting brackets on the body of the vehicle. Raise the jack until the shock absorber lower mounting bolts can be installed though the axle brackets and shock absorber lower mounting eyes (Fig. 15).

(9) Install the washer and nut on the end of each shock absorber lower mounting bolt. Tighten the mounting bolts to a torque of 88 N·m (65 ft. lbs.).

(10) Remove the jack.

(11) If equipped with a rear stabilizer bar, hook the lower ends of the stabilizer bar cushion retainers into the slots in the back of the axle, then rotate the opposite end of the retainers upward so the mounting bolts can be installed. Install the mounting bolt though each cushion retainer into the threads in the rear axle (Fig. 16). Tighten the rear stabilizer bar cushion retainer bolts to a torque of 61 N·m (45 ft. lbs.).

AXLE - FRONT WHEEL DRIVE REAR (Continued)

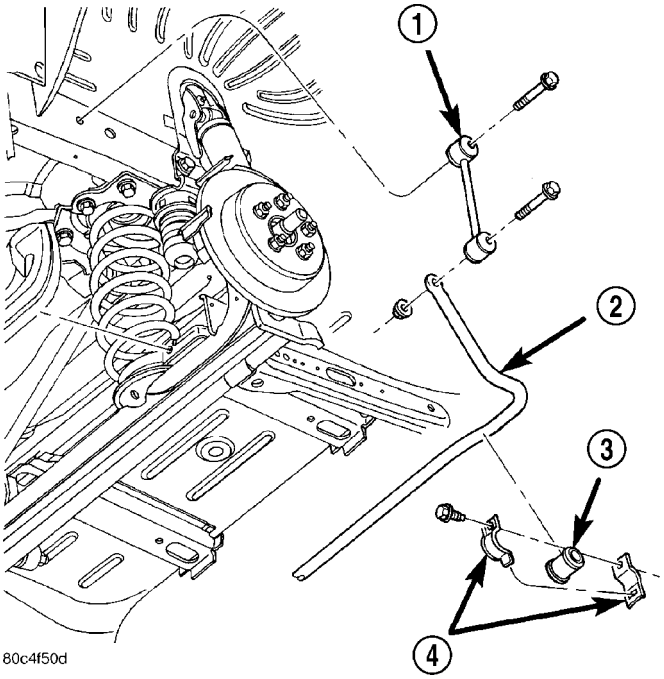

Fig. 16 Stabilizer Bar Mounting

1 - LINK
2 - STABILIZER BAR
3 - CUSHION
4 - RETAINER

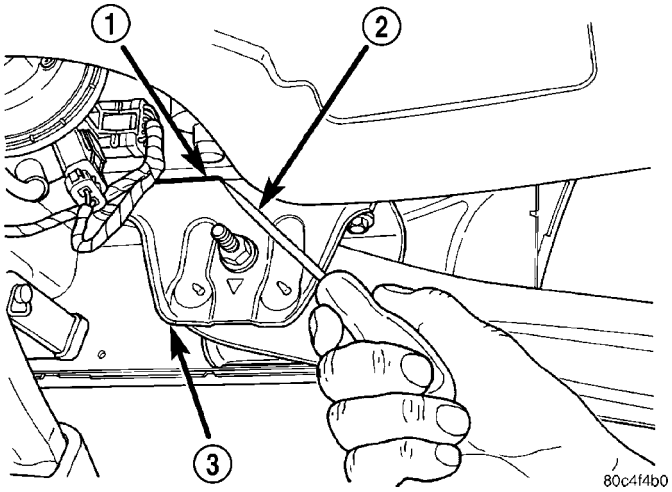

Fig. 17 Marking Bracket Location

1 - SCRIBED LINE
2 - AWL
3 - BRACKET

CAUTION: When installing the watts links and bell crank to the axle, make sure the bell crank is right-side-up. When mounted properly, the words "BACK UP" should be able to be read from the rear over the top of the axle (Fig. 20).

(12) Install the bolt from the front securing the watts link bell crank to the center of the axle (Fig. 15). Place the washer and nut on the end of the mounting bolt and tighten it to a torque of 149 N·m (110 ft. lbs.).

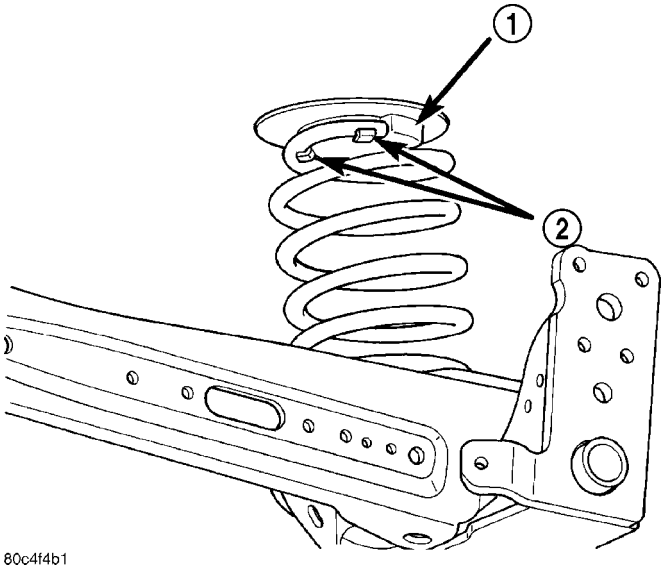

Fig. 18 Isolator Properly Installed

1 - ISOLATOR ABUTMENT
2 - FINGERS

(13) On each side of the vehicle, Install the spindle and the support plate (drum brakes) or disc brake adapter on the end of the axle (Fig. 5).

(14) Clean the threads of the bolts used to mount the brake shoe support plates or disc brake adapters, and the spindles to the axle, then apply Mopar® Stud & Bearing Mount Adhesive or equivalent to the bolt threads or replace with new mounting bolts.

(15) Install the four bolts securing each brake shoe support plate or disc brake adapter, and the spindle to the axle. Tighten the mounting bolts to a torque of 95 N·m (70 ft. lbs.).

(16) On vehicles equipped with antilock brakes, install the wheel speed sensors in the disc brake adapters and install the bolts securing them in place (Fig. 14). Tighten the wheel speed sensor mounting bolts to a torque of 12 N·m (105 in. lbs.).

(17) Guide the end of each parking brake cable through hole in the trailing arm towards the brake.

(18) Align the cable routing brackets with their mounts on the trailing arm. Install the two bolts securing the cable and routing brackets to the trailing arm (Fig. 13). Install and tighten the mounting bolts to a torque of 11 N·m (100 in. lbs.).

(19) On each side of the vehicle, install the parking brake cable into the brake support plate or the rear disc brake adapter. Be sure the locking fingers on the cable retainer are expanded once the cable is pushed all the way into the support plate or brake adapter hole to ensure the cable is securely held in place.

AXLE - FRONT WHEEL DRIVE REAR (Continued)

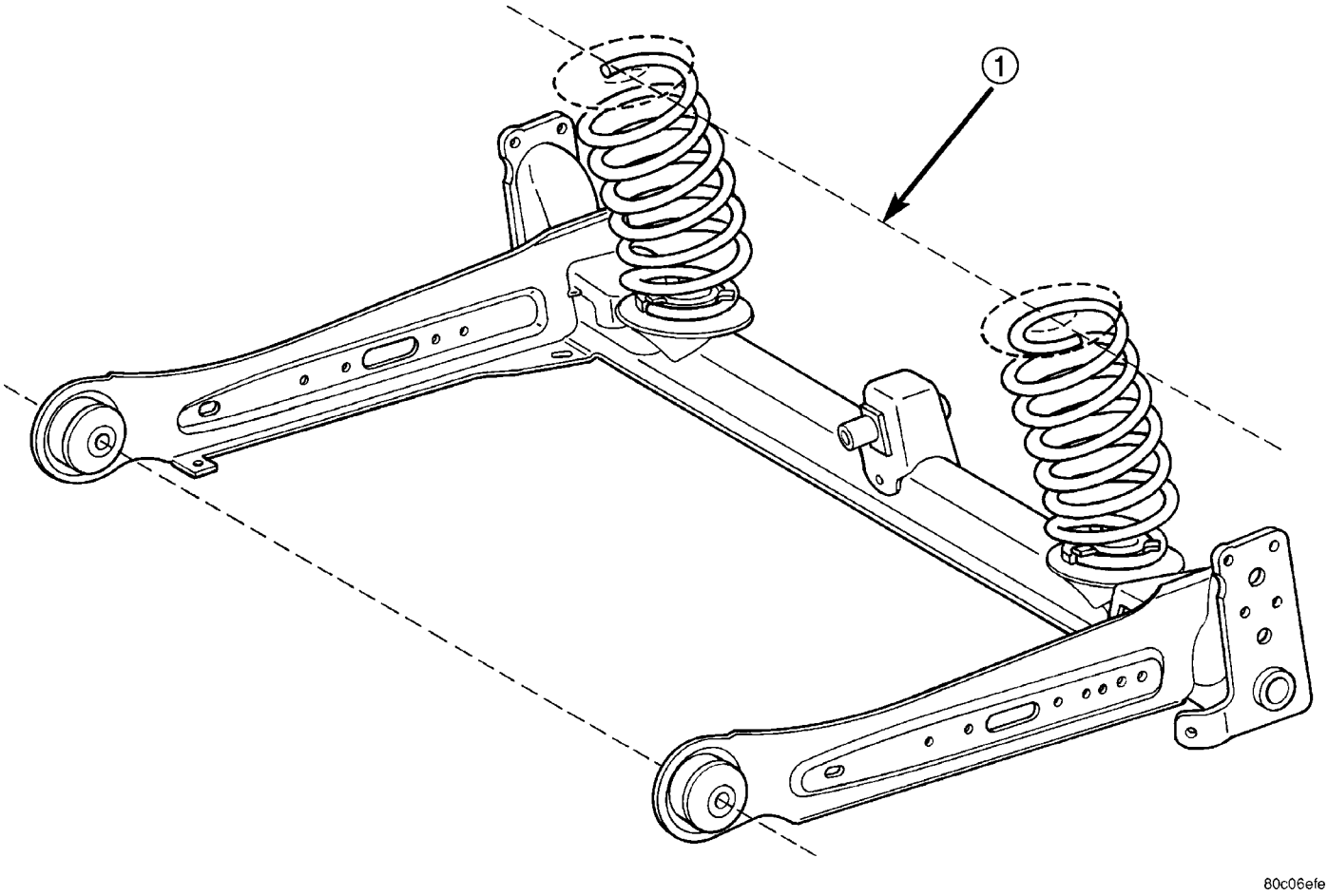

Fig. 19 Coil Spring Orientation

1 - IMAGINARY LINE

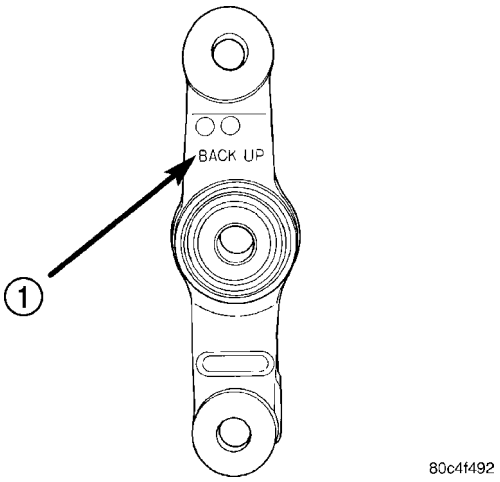

Fig. 20 Bell Crank

1 - INSTALLATION DIRECTION

(20) On vehicles equipped with rear drum brakes, on each side of the vehicle:

- Install the parking brake cable on the parking brake cable actuating lever (Fig. 8).
- Install the actuating spring to the brake shoe and the brake adjustment lever (Fig. 9).

(21) On vehicles equipped with rear disc brakes, on each side of the vehicle:

- Install the parking brake shoe actuator lever on the parking brake cable (Fig. 11).
- Install the parking brake shoe assemblies on the disc brake adapter (Fig. 7).

(22) Install a hub and bearing on each rear spindle. Install a NEW hub and bearing retaining nut. Tighten the retaining nuts to a torque of 217 N·m (160 ft. lbs.).

(23) Install the hub and bearing dust caps.

NOTE: On vehicles with rear drum brakes, before installing the drum, it may be necessary to adjust the rear brakes. (Refer to 5 - BRAKES/HYDRAULIC/MECHANICAL/BRAKE PADS/SHOES - ADJUSTMENTS)

(24) On drum brake equipped vehicles, install the brake drums.

AXLE - FRONT WHEEL DRIVE REAR (Continued)

(25) On vehicles equipped with rear disc brakes (Fig. 6):

(a) Install the brake rotors.

(b) Install the disc brake calipers.

(c) Install the caliper guide pin bolts, then tighten them to a torque of 22 N·m (192 in. lbs.).

(26) Install the bolts securing the disc brake flex hoses or drum brake flex hoses to the axle trailing arms.

(27) Install the rear tire and wheel assemblies. Tighten all wheel nuts to a torque of 135 N·m (100 ft. lbs.).

(28) Lower the vehicle.

(29) Install the rear parking brake cables into the equalizer on the parking brake lever output cable (Fig. 4).

(30) Ensure that the parking brake cables are correctly installed on the equalizer and aligned with the cable track on the parking brake lever.

WARNING: THE AUTOMATIC ADJUSTING FEATURE OF THIS PARKING BRAKE LEVER CONTAINS A CLOCKSPRING LOADED TO APPROXIMATELY 19 POUNDS. DO NOT RELEASE THE AUTOMATIC ADJUSTER LOCKOUT DEVICE UNLESS THE REAR PARKING BRAKE CABLES AND EQUALIZER ARE CONNECTED TO THE LEVER OUTPUT CABLE. KEEP HANDS OUT OF AUTOMATIC ADJUSTER SECTOR AND PAWL AREA. FAILURE TO OBSERVE CAUTION IN HANDLING THIS MECHANISM COULD LEAD TO SERIOUS INJURY.

NOTE: The parking brake lever can only be in the released position when releasing the automatic adjuster.

(31) Keeping your hands clear of the automatic adjuster sector and pawl area, firmly grasp the parking brake lever pin punch (drill bit or locking pin if a new mechanism has been installed) (Fig. 3), then quickly remove it from the parking brake lever mechanism. This will allow the parking brake lever mechanism to automatically adjust the parking brake cables.

(32) Cycle the parking brake lever once to position the parking brake cables, then return the parking brake lever its released position.

(33) Check the rear wheels of the vehicle. They should rotate freely without excessive dragging with the lever in its released position.

(34) Install the center console and its mounting screws.

(35) Install the shift knob if previously removed.

(36) Apply the parking brake.

(37) Remove the blocks from the tires and wheels.

(38) Reconnect the battery negative terminal.

(39) Reinstall the air cleaner cover.

(40) Place the vehicle on an alignment rack or drive-on hoist.

(41) With the vehicle at curb height, tighten both trailing arm to mounting bracket pivot thru-bolts to a torque of 122 N·m (90 ft. lbs.).

(42) Check the rear wheel alignment (Refer to 2 - SUSPENSION/WHEEL ALIGNMENT - STANDARD PROCEDURE). If necessary, thrust angle may be adjusted by loosening the axle training arm bracket bolts to the body and shifting the axle forward or rearward, then retightening the bolts to a torque of 54 N·m (40 ft. lbs.).

AXLE PIVOT BUSHING

REMOVAL

NOTE: Before proceeding, (Refer to 2 - SUSPENSION/REAR - WARNING).

(1) Raise the vehicle. (Refer to LUBRICATION & MAINTENANCE/HOISTING - STANDARD PROCEDURE)

(2) Remove both rear tire and wheel assemblies from the vehicle.

(3) Remove the bolts securing the rear brake flex hoses (and wheel speed sensor cable on ABS models) to the vehicle body immediately behind the axle trailing arm forward brackets.

(4) Remove the two bolts on each axle trailing arm securing the parking brake cables and routing brackets to the arm (Fig. 13).

(5) Move the parking brake cables from their mounting positions away from the bottom of the trailing arm pivot bushing and the forward bracket.

(6) Remove the bolt securing the watts link bell crank to the center of the axle (Fig. 15).

(7) Position a transmission jack or equivalent under the center of the axle raising it just enough to support the axle.

(8) Using an awl, scribe a line marking the location of the axle trailing arm bracket, side-to-side and front-to-rear, on the body of the vehicle (Fig. 17).

(9) Remove the bolts securing the trailing arm forward brackets to the body of the vehicle.

(10) Using the lower shock mounts as a pivot point, pry down on the forward end of the trailing arm and place a block of wood between the top of the arm and the body of the vehicle just to the rear of the forward mounting bracket. Be careful not to pinch any hoses or cables.

(11) Remove the pivot thru-bolt securing the forward bracket to the trailing arm.

AXLE PIVOT BUSHING (Continued)

(12) Place Receiver, Special Tool 8405-1, on Press, Special Tool C-4212F, and tighten the set screw (Fig. 21).

(13) Place the special tool assembly over the bushing to be replaced as shown (Fig. 21). When properly installed, the screw drive on the special tool will be toward the center of the vehicle. Note the curve on the axle trailing arm. This curve prevents the tool from being properly installed in the opposite direction.

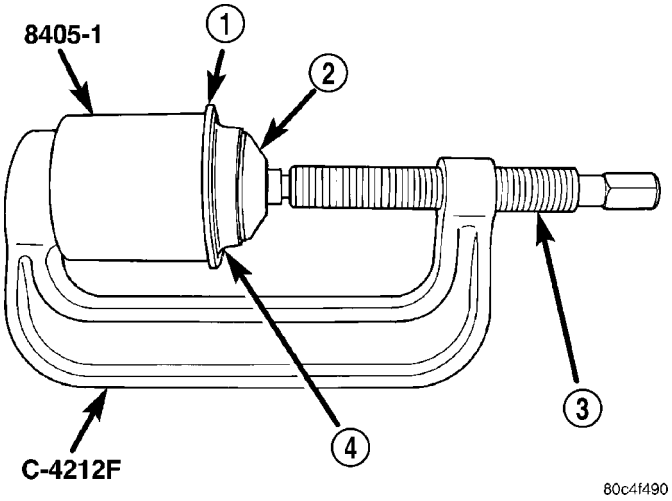

Fig. 21 Bushing Removal

1 - TRAILING ARM
2 - BUSHING
3 - SCREW DRIVE
4 - CURVE

(14) Tighten the screw drive, pressing the bushing out of the trailing arm into the receiver.

(15) Remove the tool and the bushing from the trailing arm. Discard the used bushing.

(16) If the opposite side bushing needs to be removed, repeat Step 11 through Step 15 on the opposite bushing.

INSTALLATION

NOTE: To ease and attain proper installation of the bushing using Special Tool 8405, use Mopar® Rubber Bushing Installation Lube as indicated in the following step.

(1) Apply Mopar® Rubber Bushing Installation Lube to the outside edges of the NEW bushing. Also, lubricate the inside of the Installer, Special Tool 8405-2 with the special lube.

(2) Place the stepped end of the Installer on the end of the trailing arm bushing sleeve that has the curved flange at the arm (Fig. 22).

(3) Place the lubricated bushing inside the large opening in the Installer.

(4) Place the Press, Special Tool C-4212F, with Receiver, Special Tool 8405-1, installed, over the arm, Installer and bushing as shown (Fig. 22). When properly installed, the screw drive on the special tool will be toward the center of the vehicle. Note the curve on the axle trailing arm. This curve prevents the tool from being properly installed in the opposite direction.

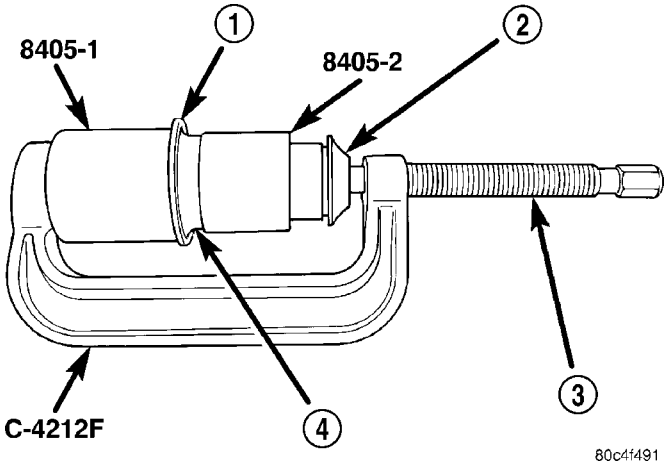

Fig. 22 Bushing Installation

1 - TRAILING ARM
2 - BUSHING
3 - SCREW DRIVE
4 - CURVE

(5) Tighten the screw drive, pressing the bushing into the trailing arm sleeve. Do not over-install the bushing; the bushing can be pushed out the other side, into the Receiver. Push the bushing in until freed from the installer and centered in the trailing arm sleeve. The outer lips of the bushing must hang out past the end of the sleeve on each side of the trailing arm.

(6) Remove the tools from the trailing arm.

(7) If the opposite side bushing needs to be installed, repeat Step 1 through Step 6 on the opposite side.

(8) Install the trailing arm forward bracket(s) on the axle using the following way:

(a) From above the axle, place the bracket down over the axle trailing arm bushing aligning the hole in the bracket with the center hole in the bushing (Fig. 15).

(b) From the outboard side of the axle and bracket, push the thru-bolt through the bracket and bushing. **The trailing arm bracket thru-bolts must be installed from the outside, in toward the center of the axle assembly, otherwise the bolt threaded ends will come in contact with the body of the vehicle upon axle installation on vehicle.**

AXLE PIVOT BUSHING (Continued)

(c) Install the nut on the inboard end of the nut. Tighten the nut until the bracket has resistance when turned, but still moves independent of the axle bushing. It must be fully tightened later, once the vehicle is at curb height.

(9) Remove the wood block between the arm and body of the vehicle.

(10) Swing the trailing arms up aligning the brackets with the scribed marks made upon removal (Fig. 17), then install all eight mounting bolts (four per side). Thread the bolts in, but do not fully tighten.

(11) Tap the axle trailing arm brackets as necessary to align the brackets to the scribed marks, then tighten the bolts to a torque of 54 N·m (40 ft. lbs.).

(12) Remove the jack.

CAUTION: When installing the watts links and bell crank to the axle, make sure the bell crank is right-side-up. When mounted properly, the words "BACK UP" should be able to be read from the rear over the top of the axle (Fig. 20).

(13) Install the bolt from the front securing the watts link bell crank to the center of the axle (Fig. 15). Place the washer and nut on the end of the mounting bolt and tighten it to a torque of 149 N·m (110 ft. lbs.).

(14) Move the parking brake cables to their original mounting position below the axle pivot bushing on the inboard side of the trailing arm.

(15) Align the cable routing brackets with their mounts on the trailing arm. Install the two bolts securing the cable and routing brackets to the trailing arm (Fig. 13). Install and tighten the mounting bolts to a torque of 11 N·m (100 in. lbs.).

(16) Make sure the parking brake cable and grommet is still in the proper position at the body access hole.

(17) Install the bolts securing the brake flex hoses (and wheel speed sensor cable on ABS models) to the vehicle body immediately behind the axle trailing arm forward brackets.

(18) Install the rear tire and wheel assemblies. Tighten all wheel nuts to a torque of 135 N·m (100 ft. lbs.).

(19) Lower the vehicle.

(20) Place the vehicle on an alignment rack or drive-on hoist.

(21) With the vehicle at curb height, tighten both trailing arm to mounting bracket pivot thru-bolts to a torque of 122 N·m (90 ft. lbs.).

HUB / BEARING

DESCRIPTION

The rear wheel bearing and wheel mounting hub used on this vehicle are a one-piece sealed unit or hub and bearing assembly. It is permanently lubricated when assembled and is sealed for life. There is no periodic lubrication or maintenance recommended for these units.

The hub and bearing is mounted on the spindle which is bolted to the axle (Fig. 23). The hub and bearing is secured to the spindle using a special nut.

Vehicles equipped with antilock brakes have rear hub and bearings with the tone wheel for the rear wheel speed sensors pressed onto the hub.

The only serviceable components of the hub and bearing are the wheel mounting studs pressed into the hub.

OPERATION

The hub and bearing adapts the tire and wheel assembly to the axle mounted spindle. It's bearing allows the tire and wheel assembly to rotate freely on the vehicle. The brake drum or brake rotor mounts to the hub's wheel mounting studs aiding in stopping the vehicle when required.

On vehicles equipped with antilock brakes, the tone wheel pressed onto the hub allows the brake system to sense wheel motion.

DIAGNOSIS AND TESTING - HUB AND BEARING (REAR)

The hub and bearing is designed for the life of the vehicle and requires no type of periodic maintenance. The following procedure may be used for diagnosing the condition of the hub and bearing.

With the wheel, disc brake rotor or brake drum removed, rotate the hub. Any roughness or resistance to rotation may indicate dirt intrusion or a failed hub bearing. If the bearing exhibits any of these conditions during diagnosis, the hub and bearing will require replacement. The bearing is not serviceable alone.

Damaged bearing seals and the resulting excessive grease loss may also require hub and bearing replacement. Moderate grease weapage from the bearing is considered normal and should not require replacement of the wheel bearing.

To diagnose a bent hub, refer to ROTOR in BRAKES for the procedure on measuring hub runout.

HUB / BEARING (Continued)

REMOVAL

NOTE: Before proceeding, (Refer to 2 - SUSPENSION/REAR - WARNING).

(1) Raise the vehicle. (Refer to LUBRICATION & MAINTENANCE/HOISTING - STANDARD PROCEDURE)

(2) Remove the rear tire and wheel assembly.

(3) On vehicles equipped with rear drum brakes, remove the brake drum retaining clips, then the drum (Fig. 23).

(4) On vehicles equipped with rear disc brakes:

(a) Remove the disc brake caliper guide pin bolts, then the caliper from the disc brake adapter (Fig. 24).

(b) Hang the caliper out of the way using a wire hanger or bungee cord.

(c) Remove the brake rotor retaining clips (Fig. 23).

(d) Remove the brake rotor from the rear hub and bearing.

(5) Remove the dust cap from the hub and bearing (Fig. 23).

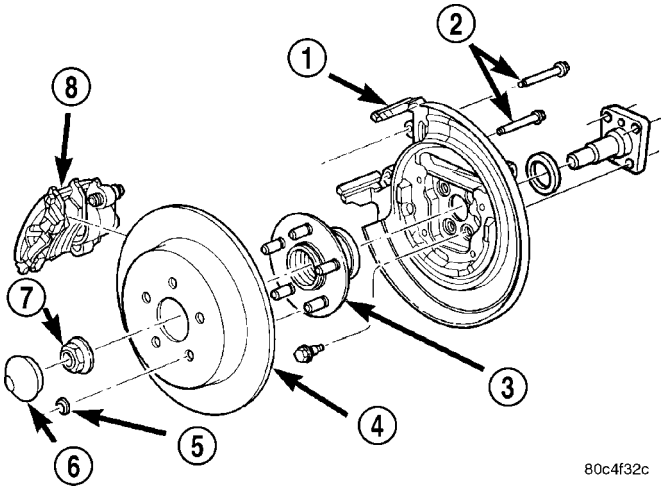

Fig. 24 Rear Disc Brakes

1 - DISC BRAKE ADAPTER
2 - GUIDE PIN BOLTS
3 - HUB AND BEARING
4 - BRAKE ROTOR
5 - RETAINER CLIP
6 - DUST CAP
7 - NUT
8 - DISC BRAKE CALIPER

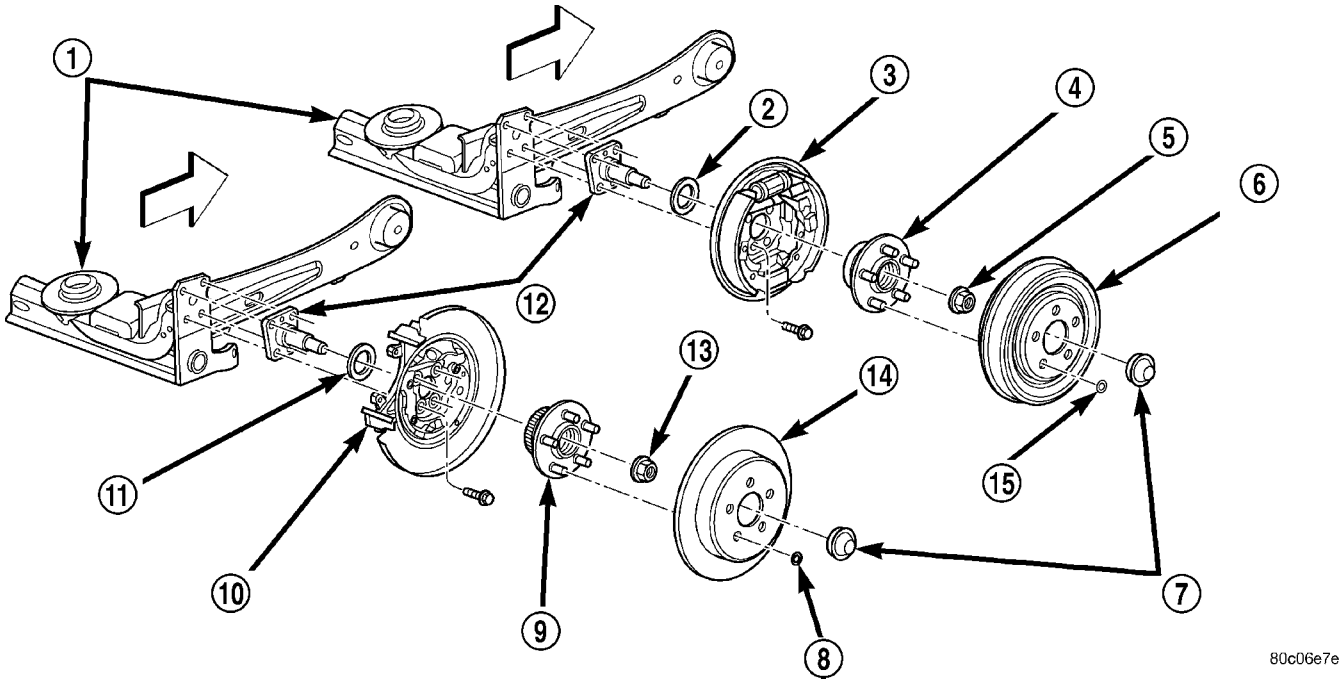

Fig. 23 Rear Brake Mounting To Axle

1 - AXLE
2 - SEAL
3 - DRUM BRAKE WITH SUPPORT PLATE
4 - HUB AND BEARING
5 - HUB NUT
6 - BRAKE DRUM
7 - DUST CAP
8 - RETAINER CLIP
9 - HUB AND BEARING
10 - DISC BRAKE ADAPTER
11 - SEAL
12 - SPINDLE
13 - HUB NUT
14 - BRAKE ROTOR
15 - RETAINER CLIP

HUB / BEARING (Continued)

(6) Remove the hub and bearing retaining nut from the spindle, then remove the hub and bearing (Fig. 23).

INSTALLATION

(1) Install the hub and bearing on the spindle (Fig. 23). Install a NEW hub and bearing retaining nut. Tighten the retaining nuts to a torque of 217 N·m (160 ft. lbs.).

(2) Install the hub and bearing dust caps.

(3) On drum brake equipped vehicles, install the brake drum.

(4) On vehicles equipped with rear disc brakes (Fig. 24):

(a) Install the brake rotor.

(b) Install the disc brake caliper.

(c) Install the caliper guide pin bolts, then tighten them to a torque of 22 N·m (192 in. lbs.).

(5) Install the rear tire and wheel assembly. Tighten all wheel nuts to a torque of 135 N·m (100 ft. lbs.).

(6) Lower the vehicle.

JOUNCE BUMPER

REMOVAL

(1) Raise the vehicle. (Refer to LUBRICATION & MAINTENANCE/HOISTING - STANDARD PROCEDURE)

(2) Grasp the jounce bumper and with a twisting motion, remove the jounce bumper from the bracket mounted to the body.

INSTALLATION

CAUTION: Do not use any type of lubricant to aid in jounce bumper installation. Premature jounce bumper failure issues could result.

(1) Carefully twist and push the jounce bumper into the bracket mounted to the body of the vehicle until it bottoms in the bracket.

(2) Lower the vehicle.

SHOCK ABSORBER

DESCRIPTION

There is one gas-charged shock absorber on each side of the rear suspension (Fig. 25). The top of each shock absorber is bolted to a bracket attached to the body of the vehicle. The bottom of each shock absorber is bolted to the rear axle.

DIAGNOSIS AND TESTING - SHOCK ABSORBER

Inspect the shock absorber for damage and evidence of fluid running from the upper end of the fluid reservoir. (Actual leakage will be a stream of fluid running down the side of the reservoir tube and dripping off lower end of unit). A slight amount of seepage between the shaft and shaft seal is not unusual and does not affect performance of the shock absorber.

REMOVAL

NOTE: Before proceeding, (Refer to 2 - SUSPENSION/REAR - WARNING).

(1) Raise the vehicle. (Refer to LUBRICATION & MAINTENANCE/HOISTING - STANDARD PROCEDURE)

(2) Remove the tire and wheel assembly.

(3) Position a transmission jack or equivalent under the center of the axle raising it enough to support the axle.

(4) Remove the shock absorber lower mounting bolt and nut at the axle (Fig. 25).

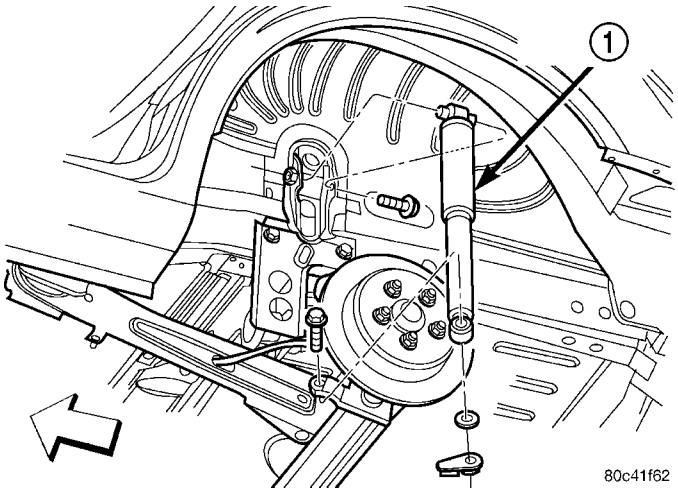

Fig. 25 Shock Absorber Mounting

1 - SHOCK ABSORBER

(5) Remove the upper mounting bolt (Fig. 25), then remove the shock absorber from the vehicle.

INSTALLATION

(1) Install the shock absorber to the vehicle by first attaching the top shock absorber eye to the body bracket using the upper mounting bolt (Fig. 25). Do not fully tighten the bolt at this time.

(2) Raise or lower the jack as necessary until the shock absorber lower mounting bolt can be installed though the axle flange and the shock absorber lower mounting eye (Fig. 25).

SHOCK ABSORBER (Continued)

(3) Install the washer and nut on the end of the shock absorber lower mounting bolt. Tighten the lower mounting bolt to a torque of 88 N·m (65 ft. lbs.).

(4) Tighten the upper shock absorber mounting bolt to a torque of 99 N·m (73 ft. lbs.).

(5) Remove the jack.

(6) Install the tire and wheel assembly. Tighten all wheel nuts to a torque of 135 N·m (100 ft. lbs.).

(7) Lower the vehicle.

SPINDLE

REMOVAL

NOTE: Before proceeding, (Refer to 2 - SUSPENSION/REAR - WARNING).

(1) Raise the vehicle. (Refer to 2 - SUSPENSION/REAR - WARNING)

(2) Remove the rear tire and wheel assembly.

(3) On vehicles equipped with rear drum brakes:

(a) Remove the bolts securing the drum brake flex hose to the axle trailing arm.

(b) Remove the brake drum retaining clips, then the drum (Fig. 26).

(4) On vehicles equipped with rear disc brakes:

(a) Remove the bolts securing the disc brake flex hose to the axle trailing arm.

(b) Remove the disc brake caliper guide pin bolts, then the caliper from the disc brake adapter (Fig. 27).

(c) Hang the caliper out of the way using a wire hanger or bungee cord.

(d) Remove the brake rotor from the rear hub and bearing.

(5) Remove the dust cap from the rear hub and bearing (Fig. 26).

(6) Remove the hub and bearing retaining nut from the spindle, then remove the hub and bearing (Fig. 26).

(7) Remove the two bolts on each axle trailing arm securing the parking brake cable and routing brackets to the axle trailing arm (Fig. 28).

(8) On vehicles equipped with antilock brakes, remove the bolt securing the wheel speed sensor to the disc brake adapter (Fig. 29). Remove the sensor from the adapter.

(9) Remove the four bolts securing the brake shoe support plate (drum brakes) or disc brake adapter, and spindle to the axle (Fig. 26).

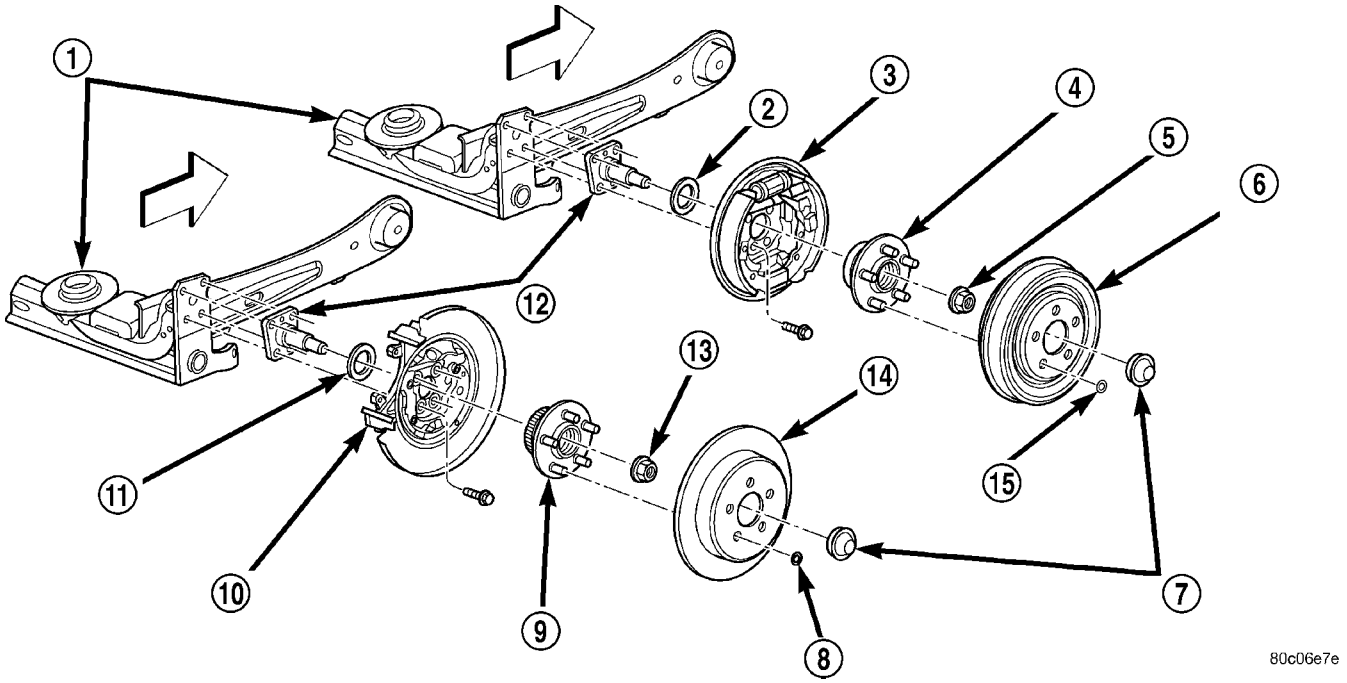

Fig. 26 Rear Brake Mounting To Axle

1 - AXLE
2 - SEAL
3 - DRUM BRAKE WITH SUPPORT PLATE
4 - HUB AND BEARING
5 - HUB NUT
6 - BRAKE DRUM
7 - DUST CAP
8 - RETAINER CLIP
9 - HUB AND BEARING
10 - DISC BRAKE ADAPTER
11 - SEAL
12 - SPINDLE
13 - HUB NUT
14 - BRAKE ROTOR
15 - RETAINER CLIP

SPINDLE (Continued)

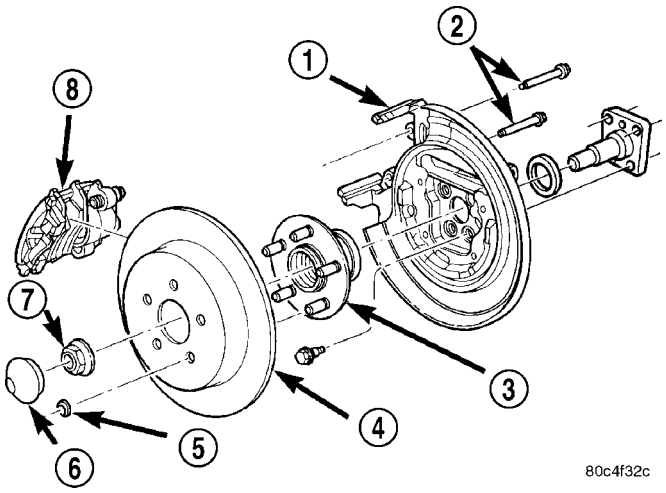

Fig. 27 Rear Disc Brakes

1 - DISC BRAKE ADAPTER
2 - GUIDE PIN BOLTS
3 - HUB AND BEARING
4 - BRAKE ROTOR
5 - RETAINER CLIP
6 - DUST CAP
7 - NUT
8 - DISC BRAKE CALIPER

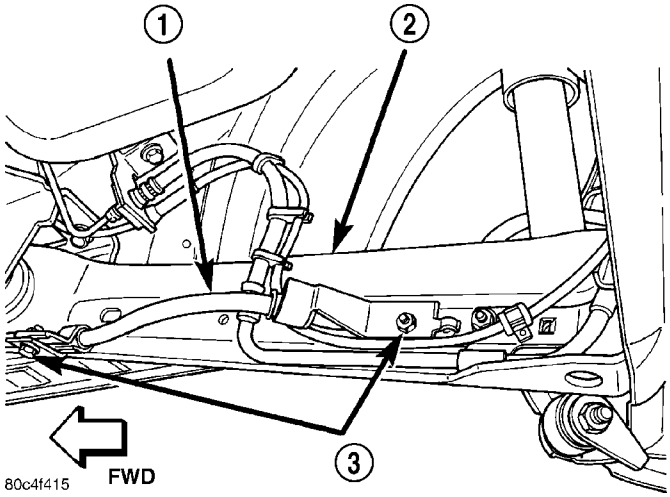

Fig. 28 Cable Routing Bracket Fasteners

1 - CABLE
2 - ARM
3 - FASTENERS

(10) Move the support plate or disc brake adapter away from the axle. At the same time, loosen the spindle from the axle and remove it from the back of the support plate or disc brake adapter.

INSTALLATION

(1) Place a new seal on the spindle (Fig. 26).

(2) Install the spindle from the back side into the support plate (drum brakes) or disc brake adapter, then place it into its mounting position on the end of the axle (Fig. 26).

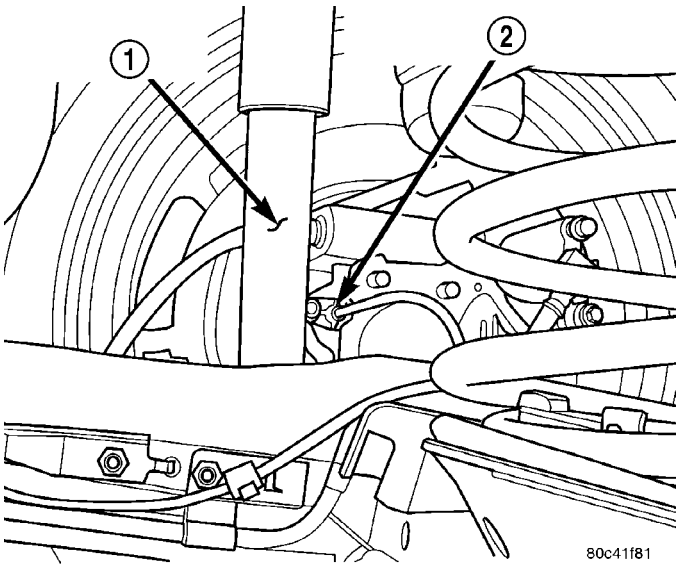

Fig. 29 Wheel Speed Sensor

1 - SHOCK ABSORBER
2 - RIGHT REAR WHEEL SPEED SENSOR

NOTE: When performing the following step, use new mounting bolts or clean and apply Mopar® Stud & Bearing Mount Adhesive or equivalent to the original mounting bolt threads before reuse.

(3) Place the support plate (drum brakes) or disc brake adapter up against the spindle, then install the four bolts securing the brake shoe support plate or disc brake adapter, and the spindle to the axle. Tighten the mounting bolts to a torque of 95 N·m (70 ft. lbs.).

(4) On vehicles equipped with antilock brakes, install the wheel speed sensor in the disc brake adapter and install the bolt securing it in place (Fig. 29). Tighten the wheel speed sensor mounting bolt to a torque of 12 N·m (105 in. lbs.).

(5) Align the parking brake cable routing brackets with their mounts on the trailing arm. Install the two bolts securing the cable and routing brackets to the trailing arm (Fig. 28). Install and tighten the mounting bolts to a torque of 11 N·m (100 in. lbs.).

(6) Install the hub and bearing on the spindle (Fig. 26). Install a NEW hub and bearing retaining nut. Tighten the retaining nut to a torque of 217 N·m (160 ft. lbs.).

(7) Install the hub and bearing dust cap.

NOTE: On vehicles with rear drum brakes, before installing the drum, it may be necessary to adjust the rear brakes. (Refer to 5 - BRAKES/HYDRAULIC/MECHANICAL/BRAKE PADS/SHOES - ADJUSTMENTS)

(8) On drum brake equipped vehicles, install the brake drum.

SPINDLE (Continued)

(9) On vehicles equipped with rear disc brakes (Fig. 27):

(a) Install the brake rotor.

(b) Install the disc brake caliper.

(c) Install the caliper guide pin bolts, then tighten them to a torque of 22 N·m (192 in. lbs.).

(10) Install the bolts securing the disc brake flex hose or drum brake flex hose to the axle trailing arm.

(11) Install the rear tire and wheel assembly. Tighten all wheel nuts to a torque of 135 N·m (100 ft. lbs.).

(12) Lower the vehicle.

SPRING

DESCRIPTION

The springs used on the rear suspension of this vehicle are the coil type (Fig. 30). They are mounted straight above the rear axle beam in line with the rear wheels. A spring isolator is attached to each end of the coil springs. Coil springs come in various heights, be sure the correct spring is in use.

REMOVAL

NOTE: Before proceeding, (Refer to 2 - SUSPENSION/REAR - WARNING).

(1) Raise the vehicle. (Refer to LUBRICATION & MAINTENANCE/HOISTING - STANDARD PROCEDURE)

(2) Remove both rear tire and wheel assemblies from the vehicle.

(3) Remove the bolt securing the watts link bell crank to the center of the axle (Fig. 30).

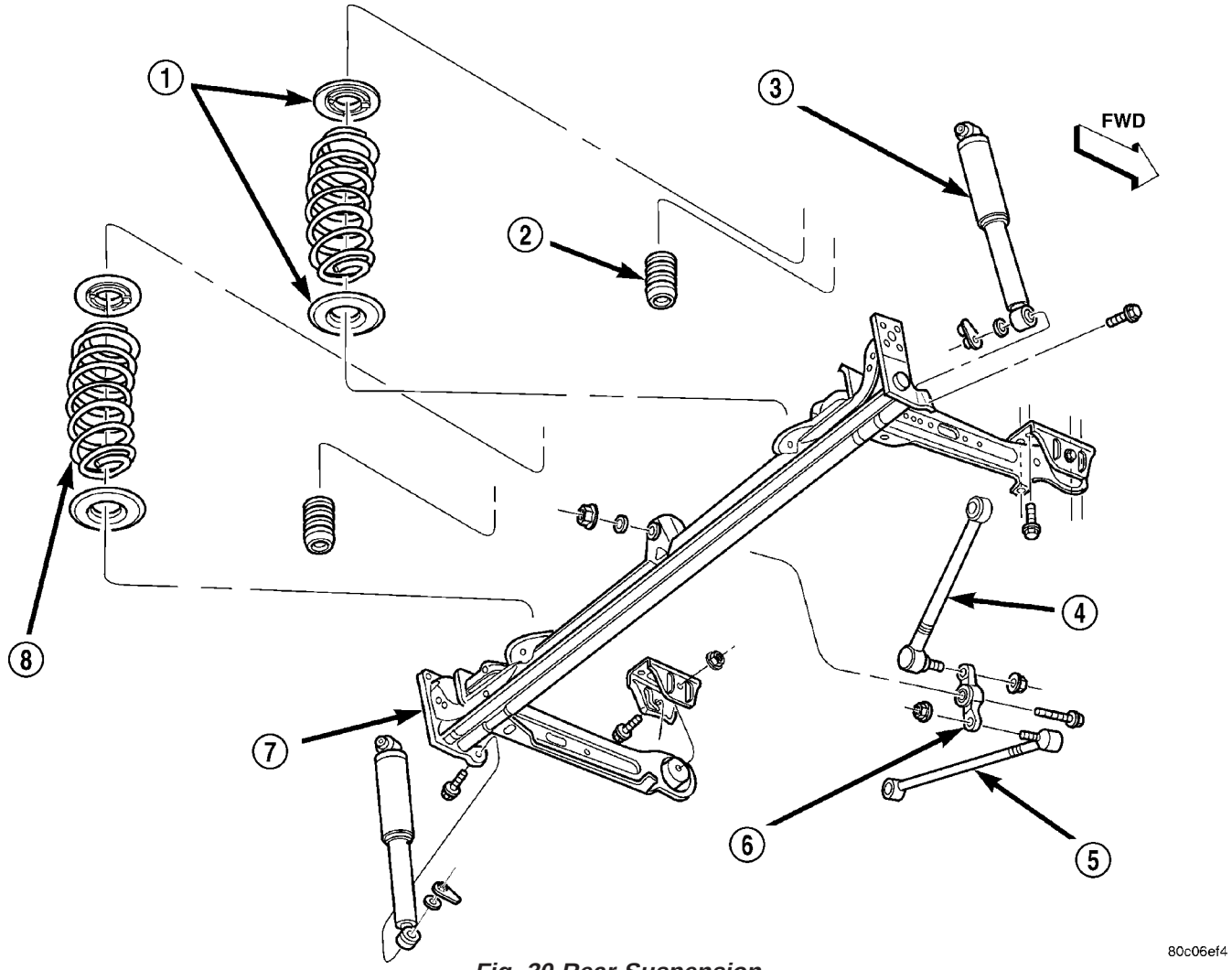

Fig. 30 Rear Suspension

1 - ISOLATORS
2 - JOUNCE BUMPER
3 - SHOCK ABSORBER
4 - WATTS LINK (UPPER)
5 - WATTS LINK (LOWER)
6 - BELL CRANK
7 - AXLE
8 - COIL SPRING

SPRING (Continued)

(4) If equipped with a rear stabilizer bar, remove the bolts securing the stabilizer bar cushion retainers to the rear axle (Fig. 31), then remove the stabilizer bar from the axle.

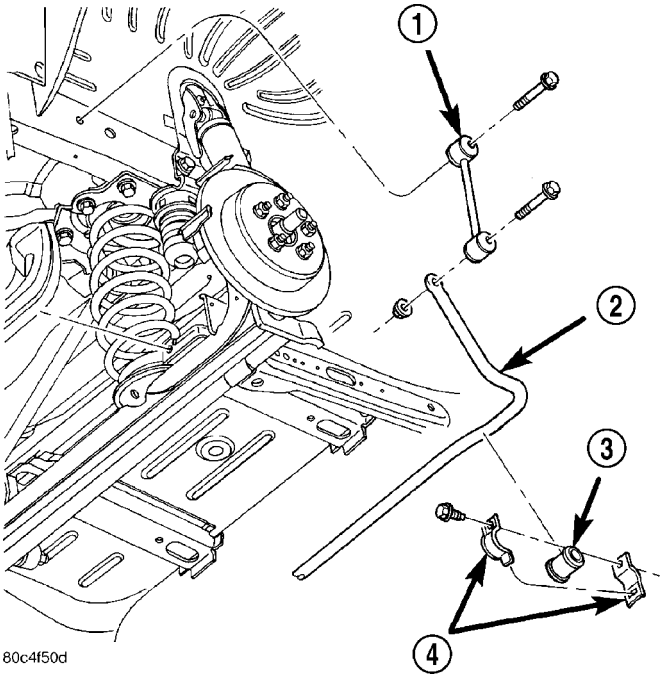

Fig. 31 Stabilizer Bar Mounting

1 - LINK
2 - STABILIZER BAR
3 - CUSHION
4 - RETAINER

(5) Position a transmission jack or equivalent under the center of the axle raising it enough to support the axle.

(6) Remove the shock absorber lower mounting bolts and nuts at the axle (Fig. 30).

(7) Lower the transmission jack until the coil springs can be removed from the axle.

(8) Remove the coil springs and rubber isolators (Fig. 30).

INSTALLATION

(1) Install a rubber isolator on each end of the coil springs wrapping the rubber fingers around the coil (Fig. 32). Turn the isolators until the rubber abutment butts up against the flat end of the spring coil.

NOTE: Both ends of the coil spring are identical. Either end of the spring can be the top or bottom.

(2) Place the coil springs on top of the axle spring perches.

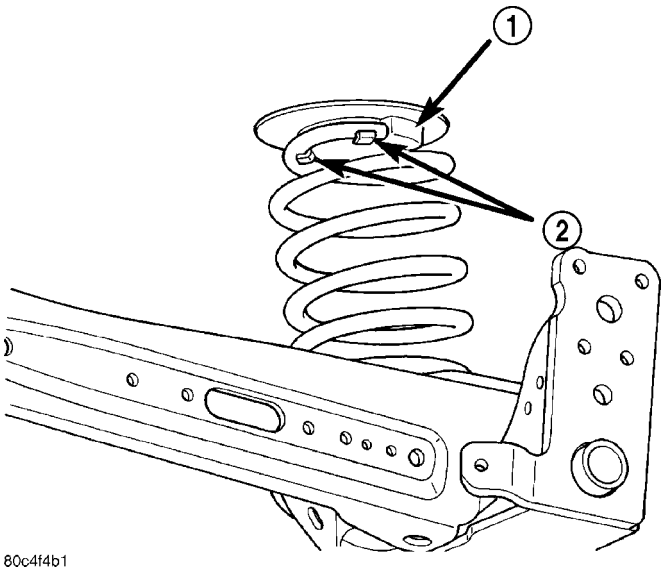

Fig. 32 Isolator Properly Installed

1 - ISOLATOR ABUTMENT
2 - FINGERS

(3) The coil springs require proper orientation to the body when installed. To do this, turn the coil springs (along with the rubber isolators) until the flat end of each upper spring coil lines up with an imaginary line running parallel with the axle beam as shown (Fig. 33). Also, make sure that the upper coils end near the outboard sides of the vehicle and not 180 degrees of that location.

(4) Raise the transmission jack guiding the coil springs into the spring mounting brackets on the body of the vehicle. Raise the jack until the shock absorber lower mounting bolts can be installed though the axle brackets and shock absorber lower mounting eyes (Fig. 30).

(5) Install the washer and nut on the end of each shock absorber lower mounting bolt. Tighten the mounting bolts to a torque of 88 N·m (65 ft. lbs.).

(6) Remove the jack.

(7) If equipped with a rear stabilizer bar, hook the lower ends of the stabilizer bar cushion retainers into the slots in the back of the axle, then rotate the opposite end of the retainers upward so the mounting bolts can be installed. Install the mounting bolt though each cushion retainer into the threads in the rear axle (Fig. 31). Tighten the rear stabilizer bar cushion retainer bolts to a torque of 61 N·m (45 ft. lbs.).

CAUTION: When installing the watts links and bell crank to the axle, make sure the bell crank is right-side-up. When mounted properly, the words “BACK UP” should be able to be read from the rear over the top of the axle (Fig. 34).

SPRING (Continued)

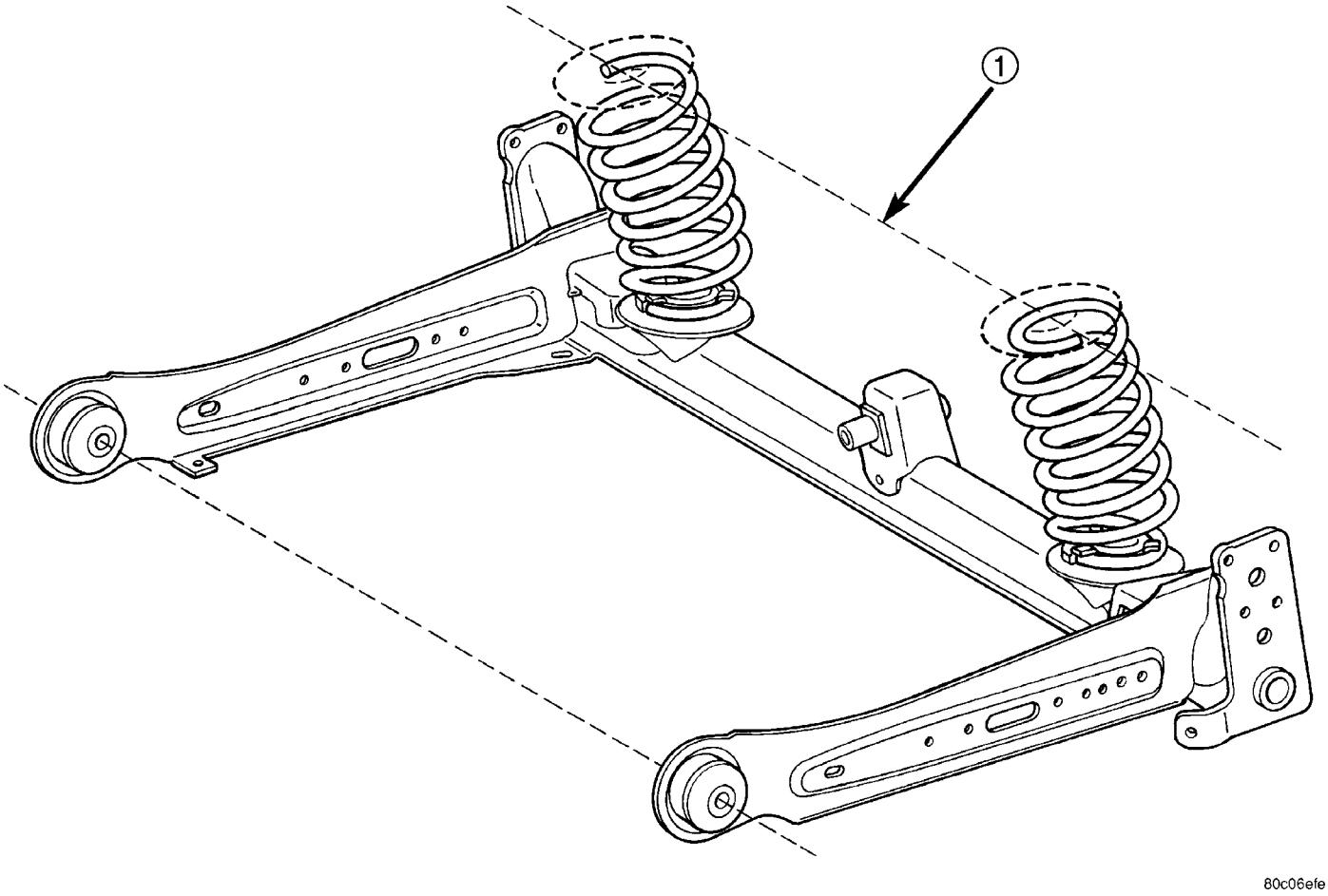

Fig. 33 Coil Spring Orientation

1 - IMAGINARY LINE

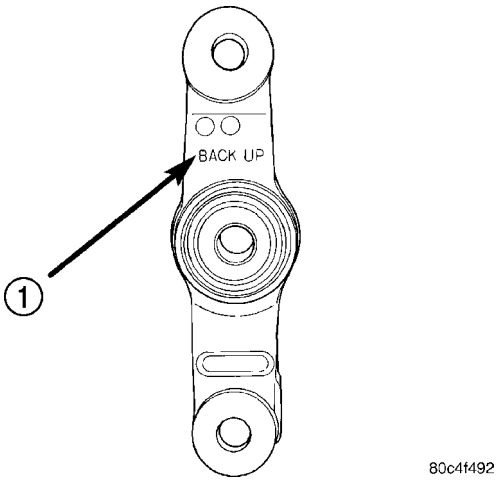

Fig. 34 Bell Crank

1 - INSTALLATION DIRECTION

(8) Install the bolt from the front securing the watts link bell crank to the center of the axle (Fig. 30). Place the washer and nut on the end of the mounting bolt and tighten it to a torque of 149 N·m (110 ft. lbs.).

(9) Install the rear tire and wheel assemblies. Tighten all wheel nuts to a torque of 135 N·m (100 ft. lbs.).

(10) Lower the vehicle.

(11) Verify proper vehicle curb height. (Refer to 2 - SUSPENSION/WHEEL ALIGNMENT - STANDARD PROCEDURE)

STABILIZER BAR

DESCRIPTION

Some versions of this vehicle are equipped with a rear stabilizer bar. The stabilizer bar interconnects the rear axle with the frame rails of the vehicle (Fig. 35).

Attachment of the stabilizer bar to the rear frame rails of the vehicle is through 2 rubber-isolator stabilizer bar links. The stabilizer bar attachment to the axle is done utilizing two rubber isolated cushions and retainers.

OPERATION

Jounce and rebound movements affecting one side of the rear suspension are partially transmitted to the opposite side of the rear suspension to stabilize body roll.

REMOVAL

NOTE: Before proceeding, (Refer to 2 - SUSPENSION/REAR - WARNING).

(1) Raise the vehicle. (Refer to LUBRICATION & MAINTENANCE/HOISTING - STANDARD PROCEDURE)

(2) Remove both rear wheel and tire assemblies from the vehicle.

(3) Remove the nut from the end of each rear stabilizer bar link bolt fastening the bar to the link (Fig. 35). Pull the bolt out far enough to free the stabilizer bar.

(4) While holding the rear stabilizer bar, remove the bolts securing the cushion retainers to the rear axle, then remove the cushion retainers, cushions and stabilizer bar from the vehicle as an assembly.

(5) To remove the cushions from the stabilizer bar, refer to stabilizer bar cushions found in this section.

INSTALLATION

(1) To install the cushions and retainers on the stabilizer bar, refer to stabilizer bar cushions found in this section.

(2) Install the stabilizer bar, cushions and retainers on the vehicle as an assembly.

(3) Hook the lower ends of the cushion retainers in the slot in the back of the axle, then rotate the opposite end of the retainers upward so the mounting bolts can be installed. Install the mounting bolt though each cushion retainer, into the threads in the rear axle (Fig. 35). Tighten the rear stabilizer bar cushion retainer bolts at the axle to a torque of 61 N·m (45 ft. lbs.).

(4) Install each stabilizer bar link bolt and nut attaching the ends of the stabilizer bar to the links (Fig. 35). Do not tighten the bolt and nut at this time.

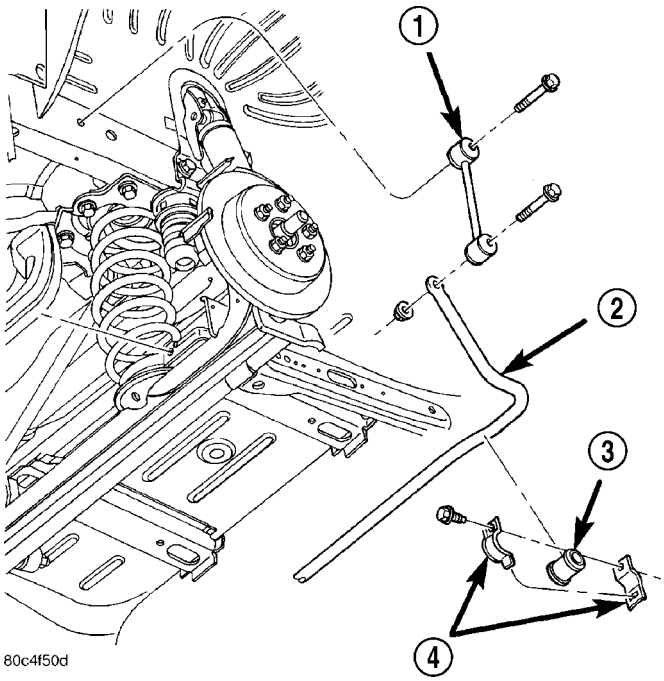

Fig. 35 Bar And Link Mounting (Right Side Shown)

1 - LINK
2 - STABILIZER BAR
3 - CUSHION
4 - RETAINER

(5) Install both tire and wheel assemblies on the vehicle. Tighten the wheel mounting stud nuts in proper sequence until all nuts are torqued to half specification. Repeat the tightening sequence, this time, to full specified torque of 135 N·m (100 ft. lbs.).

(6) Lower the vehicle to ground level (curb height).

(7) Tighten the stabilizer bar link bolts and nuts to a torque of 65 N·m (48 ft. lbs.).

STABILIZER BAR CUSHIONS

REMOVAL

NOTE: Before proceeding, (Refer to 2 - SUSPENSION/REAR - WARNING).

(1) Remove the rear stabilizer bar from the axle (Refer to 2 - SUSPENSION/REAR/STABILIZER BAR - REMOVAL).

(2) Bend back the crimp tab at the top of the retainer which secures the two halves of each cushion retainer together. Remove the retainer halves (Fig. 35).

(3) The cushions can be removed from the bar utilizing the preformed slit in each cushion and peeling them off the bar.

STABILIZER BAR CUSHIONS (Continued)

INSTALLATION

(1) Install the cushions on the stabilizer bar by opening the slit in each cushion and wrapping it around the bar. When installed properly, the slit in the cushion should face toward the front of the car once the bar is installed.

(2) Perform the following on each stabilizer bar retainer:

(a) Hook the lower end of each retainer halve to the other (Fig. 35).

(b) Install the two halves of the retainer over the cushions, matching the contour of each retainer with its cushion. The slit in the cushion should face straight toward the forward halve of the retainer.

(c) Fold the crimp tab on the forward retainer halve over the rear halve crimping the two halves together.

(3) Install the stabilizer bar on the rear axle. (Refer to 2 - SUSPENSION/REAR/STABILIZER BAR - INSTALLATION)

STABILIZER BAR LINK

REMOVAL

NOTE: Before proceeding, (Refer to 2 - SUSPENSION/REAR - WARNING).

(1) Raise the vehicle. (Refer to LUBRICATION & MAINTENANCE/HOISTING - STANDARD PROCEDURE)

(2) Remove the appropriate rear wheel and tire assembly from the vehicle.

(3) Remove the nut and bolt from the lower end of the stabilizer bar link attaching it to the stabilizer bar (Fig. 35).

(4) Remove the bolt retaining the link to the rear frame rail (Fig. 35), then remove the stabilizer bar link from the vehicle.

INSTALLATION

(1) Reinstall stabilizer bar link, starting the bolt retaining the link to frame rail (Fig. 35). Do not tighten the bolt at this time.

(2) Install the lower bolt and nut attaching the stabilizer bar link to the stabilizer bar (Fig. 35). Do not tighten the bolt and nut at this time.

(3) Install tire and wheel assembly on the vehicle. Tighten the wheel mounting stud nuts in proper sequence until all nuts are torqued to half specification. Repeat the tightening sequence, this time, to full specified torque of 135 N·m (100 ft. lbs.).

(4) Lower the vehicle to ground level (curb height).

(5) Tighten the stabilizer bar link upper bolt and lower nut to a torque of 65 N·m (48 ft. lbs.).

WATTS LINK ASSEMBLY

DESCRIPTION

The watts link assembly consists of a bell crank mounted to the rear axle and two links extending from the bell crank to brackets mounted to the body of the vehicle (Fig. 37).

The cast iron bell crank has a non—serviceable sealed—for—life bearing mounted in the center of it through which it is fastened to the axle. It also has the words “BACK UP” cast into one side of it indicating the installation direction when mounted to the axle (Fig. 36). Although the pivot may look identical end to end, it is not and must be installed with the words “BACK UP” toward the back of the vehicle facing upright in order to avoid premature bearing failure.

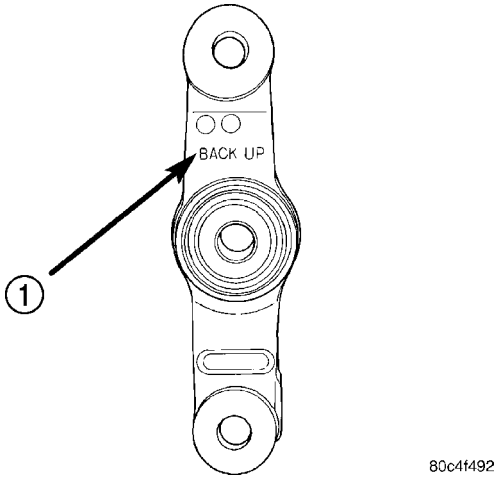

Fig. 36 Bell Crank

1 - INSTALLATION DIRECTION

The upper and lower links both have ball joints on one end and bushings on the other. The ball joint ends connect to the bell crank and the bushing ends connect to a bracket on the body. The upper link extends from the upper hole machined into the bell crank to the bracket on the right side of the vehicle. The lower link extends from the lower hole machined into the bell crank to the bracket on the left side of the vehicle. Although the links look like outer tie rods, no attempt should be made to adjust them. They are fixed to a set length at the factory and require no maintenance. The bushings on the links are not serviceable.

WATTS LINK ASSEMBLY (Continued)

OPERATION

The watts link assembly serves the same purpose as a track bar. That is, it is used to control rear axle lateral movement and provides cross-car location of the axle. Unlike a track bar, the watts link assembly offers more consistent handling and stability at varying suspension heights, either lightly loaded or fully laden. As the suspension lowers or raises, the watts link assembly compensates by rotating the bell crank in the desired direction. This rotation simulates shortening or lengthening of the links. Since there is one link on each side, the change affects each side of the suspension evenly.

DIAGNOSIS AND TESTING - WATTS LINK ASSEMBLY

Inspect each link looking for signs of contact with an object that has caused damage to the link. If a link is bent or damaged, replace it. Do not attempt to repair or straighten a watts link.

Verify there is not excessive play in the ball joint end of each link. Check to make sure the ball joint boots are not torn. Verify the stakes are tightly securing the ball joint forging to the link. Replace the links as necessary. Do not attempt to remove the ball joint from a link or re-stake it. Although it may appear so, the ball joints cannot be serviced separately from the watts links.

Inspect the link bushings for signs of damage or deterioration. If damage or deterioration is present, replace the link. The isolator bushings cannot be serviced separately.

Verify the bell crank is installed properly. From the rear of the vehicle, the words “BACK UP” should be able to be read on the upper half of the bell crank extending above the axle. If not, remove the bell crank and remount it correctly. If the bell crank is not correctly mounted, the watts link assembly will not operate properly.

Inspect the bell crank for signs of damage. Inspect for excessive play in the bearing. With the links disconnected, rotate the bell crank. Any roughness or resistance to rotate may indicate dirt intrusion or a failed bearing. If the bell crank exhibits any of these conditions, replace the bell crank.

WATTS BELL CRANK

REMOVAL

NOTE: Before proceeding, (Refer to 2 - SUSPENSION/REAR - WARNING).

(1) Raise the vehicle. (Refer to LUBRICATION & MAINTENANCE/HOISTING - STANDARD PROCEDURE)

(2) Remove the nut securing the bell crank pivot bolt in the center of the axle (Fig. 37).

(3) With the bolt still installed, slide the bell crank away from the axle just enough to remove the nuts securing both links to the bell crank (Fig. 37). Remove the nuts.

(4) Install the Remover, Special Tool MB991113, on each link ball joint at the bell crank and release ball joint from the bell crank.

(5) Remove the pivot bolt and bell crank from the vehicle.

INSTALLATION

(1) Install the pivot bolt through the front of the watts link bell crank (Fig. 37). Make sure the words “BACK UP” are towards the rear (Fig. 38).

(2) Start the pivot bolt with the bell crank attached into the front of the axle center mounting hole (Fig. 37).

CAUTION: Although both ends of the bell crank appear to be the same, they are not. When installing the watts links and bell crank, make sure the bell crank is properly positioned. When mounted properly, the words “BACK UP” should be able to be read from the rear over the top of the axle (Fig. 38).

NOTE: The upper link extends from the right side of the vehicle to the upper end of the bell crank while the lower link extends from the left side of the vehicle to the lower end of the bell crank.

(3) Install the upper and lower links to the bell crank (Fig. 37). Install the nuts on the ball joint studs and tighten them to a torque of 14 N·m (10 ft. lbs.) plus an additional 180° turn after torque is met.

WATTS BELL CRANK (Continued)

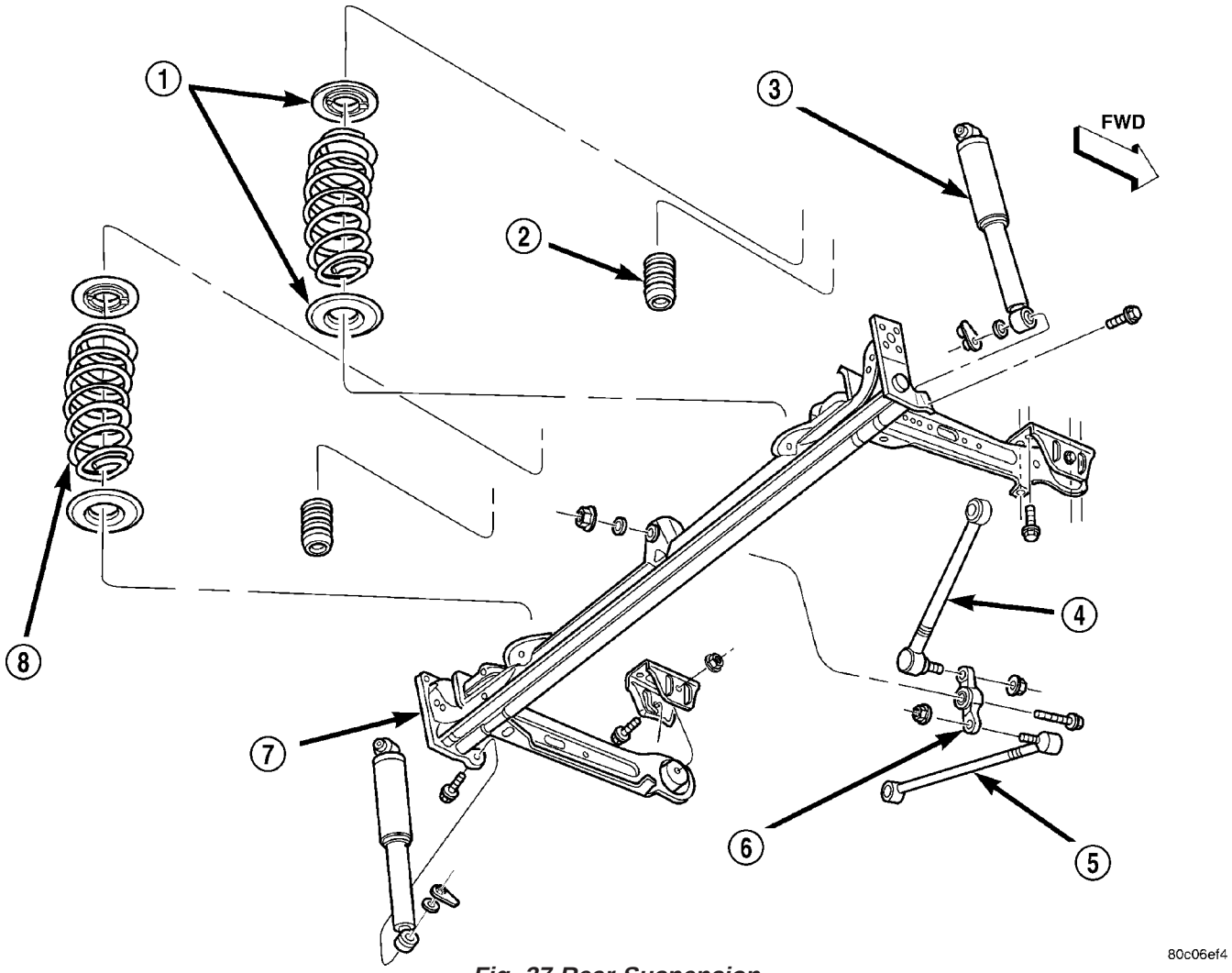

Fig. 37 Rear Suspension

1 - ISOLATORS
2 - JOUNCE BUMPER
3 - SHOCK ABSORBER
4 - WATTS LINK (UPPER)
5 - WATTS LINK (LOWER)
6 - BELL CRANK
7 - AXLE
8 - COIL SPRING

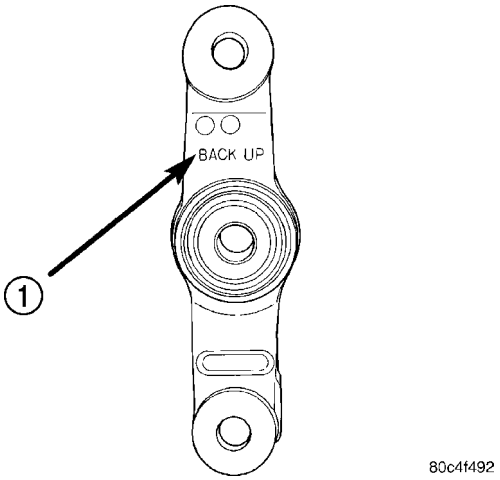

Fig. 38 Bell Crank

1 - INSTALLATION DIRECTION

(4) Slide the bell crank pivot bolt all the way through the axle.

(5) Place the washer and nut on the end of the pivot bolt and tighten it to a torque of 149·m (110 ft. lbs.).

(6) Verify the words “BACK UP” can be read on the bell crank from the rear over the top of the axle.

(7) Lower the vehicle to the ground.

WATTS LINK

REMOVAL

NOTE: Before proceeding, (Refer to 2 - SUSPENSION/REAR - WARNING).

(1) Raise the vehicle. (Refer to LUBRICATION & MAINTENANCE/HOISTING - STANDARD PROCEDURE)

(2) If the lower watts link is being removed, perform the following first, otherwise proceed to the next step.

(a) Remove the nut securing the bell crank pivot bolt in the center of the axle (Fig. 37).

(b) With the bolt still installed, slide the bell crank away from the axle just enough to remove the nut securing the lower link to the bell crank (Fig. 37).

(3) Remove the nut securing the ball joint to the bell crank (Fig. 37).

(4) Install the Remover, Special Tool MB991113, on the link ball joint at the bell crank and release ball joint from the bell crank.

(5) Remove the bolt securing the link to the bracket on the body of the vehicle. Remove the link.

INSTALLATION

CAUTION: When installing the link, DO NOT attempt to turn the ball joint end of the link independently.

(1) Making sure the ball joint end is positioned properly for mounting to the bell crank (Fig. 37), install the link into the bracket on the body of the vehicle.

(2) Install the bolt (and flag nut for upper link) securing the link to the bracket, but do not fully tighten it at this time. It must be tightened when the vehicle is at curb height.

NOTE: The upper link extends from the right side of the vehicle to the upper end of the bell crank while the lower link extends from the left side of the vehicle to the lower end of the bell crank.

(3) Install the upper or lower link to the bell crank (Fig. 37). Install the nut on the ball joint stud and tighten it to a torque of 14 N·m (10 ft. lbs.) plus an additional 180° turn after torque is met.

(4) If the lower link is the link being installed, perform the following, otherwise proceed to the next step.

(a) Slide the bell crank pivot bolt all the way through the axle.

(b) Place the washer and nut on the end of the pivot bolt and tighten it to a torque of 149 N·m (110 ft. lbs.).

CAUTION: Although both ends of the bell crank appear to be the same, they are not. When installing the watts links or bell crank, make sure the bell crank is properly positioned. When mounted properly, the words “BACK UP” should be able to be read from the rear over the top of the axle (Fig. 38).

(5) Verify the words “BACK UP” can be read on the bell crank from the rear over the top of the axle (Fig. 38). If they cannot be read at this position, the link or bell crank is not installed properly and must be removed and reinstalled so that the words “BACK UP” can be read on the upper rear of the bell crank once installed.

(6) Lower the vehicle to the ground.

(7) Place the vehicle on an alignment rack or drive-on hoist.

(8) With the suspension at curb height, tighten the link mounting bolt at the body bracket to a torque of 92 N·m (68 ft. lbs.).

WHEEL ALIGNMENT

TABLE OF CONTENTS

page

WHEEL ALIGNMENT
DESCRIPTION - WHEEL ALIGNMENT 52
DIAGNOSIS AND TESTING - SUSPENSION AND STEERING 55
STANDARD PROCEDURE
STANDARD PROCEDURE - CURB HEIGHT MEASUREMENT 57
STANDARD PROCEDURE - WHEEL ALIGNMENT 58
SPECIFICATIONS
WHEEL ALIGNMENT 60

WHEEL ALIGNMENT

DESCRIPTION - WHEEL ALIGNMENT

Vehicle wheel alignment is the positioning of all interrelated front and rear suspension angles. These angles affect the handling and steering of the vehicle when it is in motion. Proper wheel alignment is essential for efficient steering, good directional stability, and proper tire wear.

The method of checking a vehicle's front and rear wheel alignment varies depending on the manufacturer and type of equipment used. The manufacturer's instructions should always be followed to ensure accuracy of the alignment, except when DaimlerChrysler Corporation's wheel alignment specifications differ.

On this vehicle, the suspension angles that can be adjusted are as follows:

Front
- Camber
- Toe

Rear
- Camber
- Toe

Check the wheel alignment and make all wheel alignment adjustments with the vehicle standing at its proper curb height specification. Curb height is the normal riding height of the vehicle. It is measured from a certain point on the vehicle to the ground or a designated area while the vehicle is sitting on a flat, level surface. Refer to Curb Height Measurement in this section for additional information.

Typical wheel alignment angles and measurements are described in the following paragraphs.

CAMBER

Camber is the inward or outward tilt of the top of the tire and wheel assembly (Fig. 1). Camber is measured in degrees of angle relative to a true vertical line. Camber is a tire wearing angle.

- Excessive negative camber will cause tread wear at the inside of the tire.
- Excessive positive camber will cause tread wear on the outside of the tire.

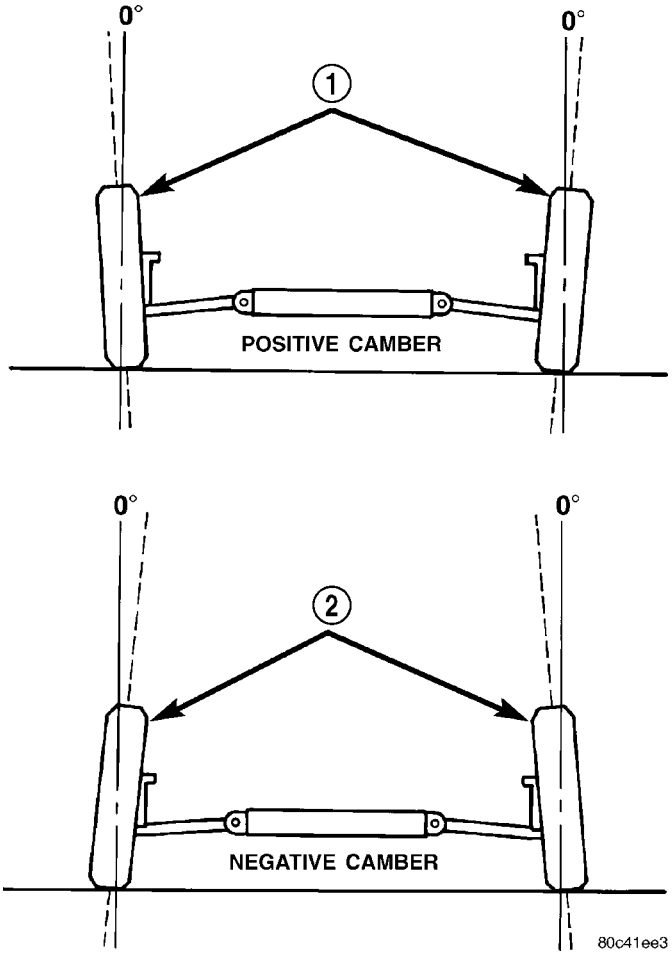

Fig. 1 Camber

1 - WHEELS TILTED OUT AT TOP
2 - WHEELS TILTED IN AT TOP

WHEEL ALIGNMENT (Continued)

CROSS CAMBER

Cross camber is the difference between left and right camber. To achieve the cross camber reading, subtract the right side camber reading from the left. For example, if the left camber is +0.3° and the right camber is 0.0°, the cross camber would be +0.3°.

CASTER

Caster is the forward or rearward tilt of the steering knuckle in reference to the position of the upper and lower ball joints. Caster is measured in degrees of angle relative to a true vertical center line. This line is viewed from the side of the tire and wheel assembly (Fig. 2).

- Forward tilt (upper ball joint ahead of lower) results in a negative caster angle.
- Rearward tilt (upper ball joint trailing lower) results in a positive caster angle.

Although caster does not affect tire wear, a caster imbalance between the two front wheels may cause the vehicle to lead to the side with the least positive caster.

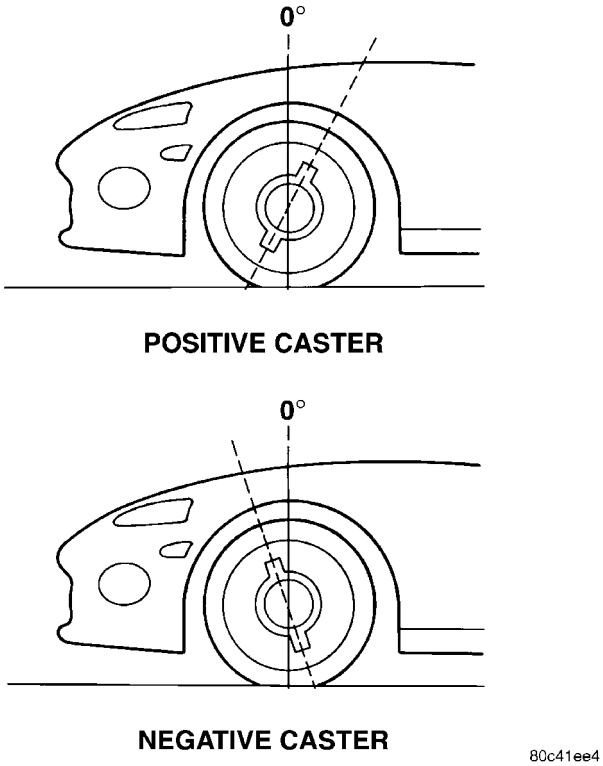

Fig. 2 Caster

CROSS CASTER

Cross caster is the difference between left and right caster.

TOE

Toe is the inward or outward angle of the wheels as viewed from above the vehicle (Fig. 3).

- Toe-in is produced when the front edges of the wheels on the same axle are closer together than the rear edges.
- Toe-out is produced when the front edges of the wheels on the same axle are farther apart than the rear edges.

Toe-in and toe-out can occur at the front wheels and the rear wheels.

Toe is measured in degrees or inches. The measurement identifies the amount that the front of the wheels point inward (toe-in) or outward (toe-out). Toe is measured at the spindle height. Zero toe means the front and rear edges of the wheels on the same axle are equally distant.

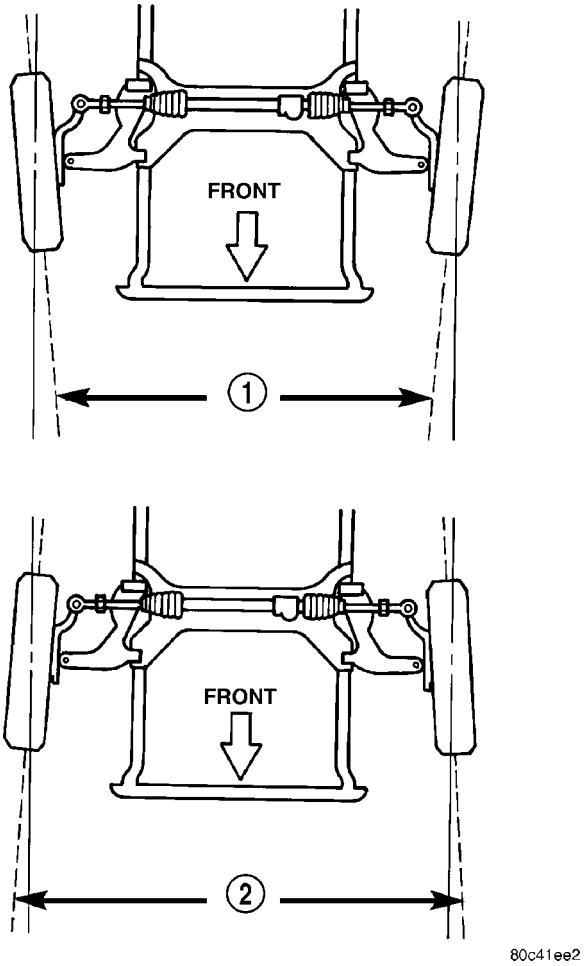

Fig. 3 Toe

1 - TOE-IN
2 - TOE-OUT

WHEEL ALIGNMENT (Continued)

TOE-OUT ON TURNS

Toe-out on turns is the relative positioning of the front wheels while steering through a turn (Fig. 4). This compensates for each front wheel's turning radius. As the vehicle encounters a turn, the outboard wheel must travel in a larger radius circle than the inboard wheel. The steering system is designed to make each wheel follow its particular radius circle. To accomplish this, the front wheels must progressively toe outward as the steering is turned from center. This eliminates tire scrubbing and undue tire wear when steering a vehicle through a turn.

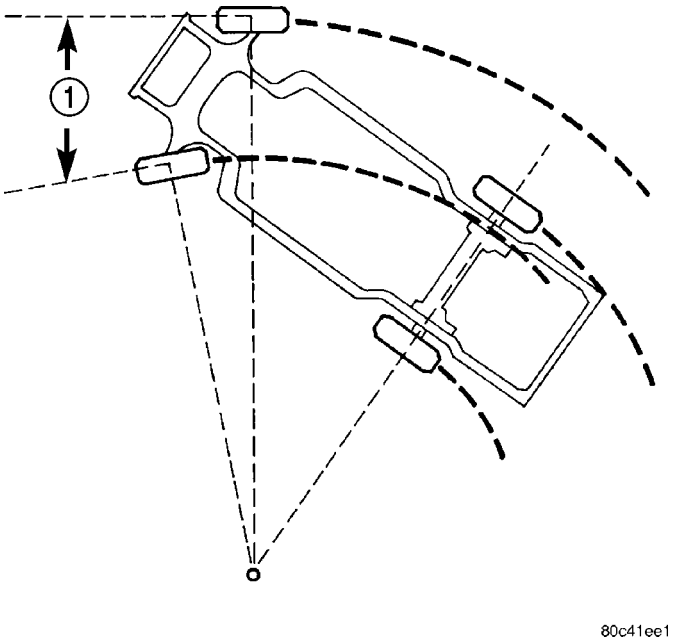

Fig. 4 Toe-Out On Turns

1 - TOE-OUT ON TURNS

DYNAMIC TOE PATTERN

Dynamic toe pattern is the inward and outward toe movement of the front and rear tires through the suspension's jounce and rebound travel. As the vehicle's suspension moves up and down, the toe pattern varies. Toe pattern is critical in controlling the directional stability of the vehicle while in motion. Front and rear dynamic toe pattern is preset by the factory at the time the vehicle is assembled.

It is not necessary to check or adjust front or rear dynamic toe pattern when doing a normal wheel alignment. The only time dynamic toe pattern needs to be checked or adjusted is if the frame of the vehicle has been damaged.

STEERING AXIS INCLINATION (S.A.I.)

Steering axis inclination is the angle between a true vertical line starting at the center of the tire at the road contact point and a line drawn through the center of the upper ball joint (or strut) and the lower ball joint (Fig. 5). S.A.I. is built into the vehicle and is not an adjustable angle. If S.A.I. is not within specifications, a bent or damaged suspension component may be the cause.

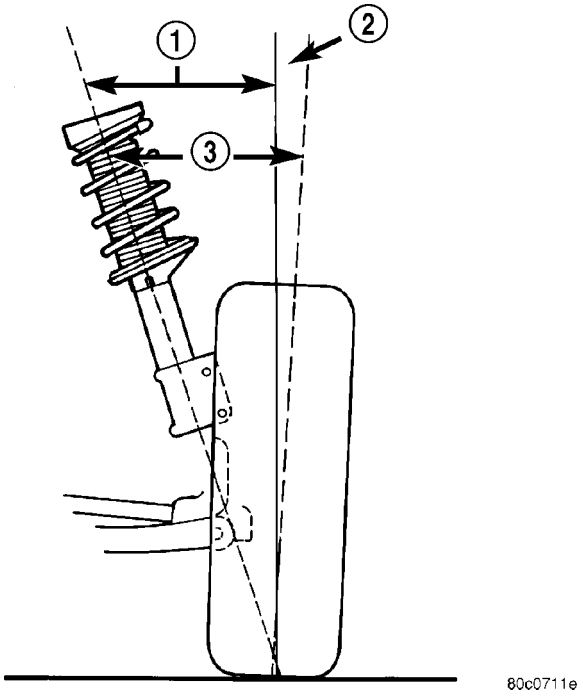

Fig. 5 S.A.I. and I.A.

1 - S.A.I.
2 - CAMBER
3 - I.A.

INCLUDED ANGLE (I.A.)

Included angle is the sum of the S.A.I. angle plus or minus the camber angle, depending on whether or not the wheel has positive or negative camber (Fig. 5). If camber is positive, add the camber angle to the S.A.I angle. If camber is negative, subtract the camber angle from the S.A.I. angle. Included angle is not adjustable, but can be used to diagnose a frame misalignment or bent suspension component (spindle, strut).

WHEEL ALIGNMENT (Continued)

THRUST ANGLE

Thrust angle is the averaged direction the rear wheels are pointing in relation to the vehicle's center line (Fig. 6). The presence of negative or positive thrust angle causes the rear tires to track improperly to the left or right of the front tires (dog tracking).

- Negative thrust angle means the rear tires are tracking to the left of the front tires.
- Positive thrust angle means the rear tires are tracking to the right of the front tires.

Improper tracking can cause undue tire wear, a lead or pull and a crooked steering wheel. Excessive thrust angle can usually be corrected by adjusting the rear wheel toe so that each wheel has one-half of the total toe measurement.

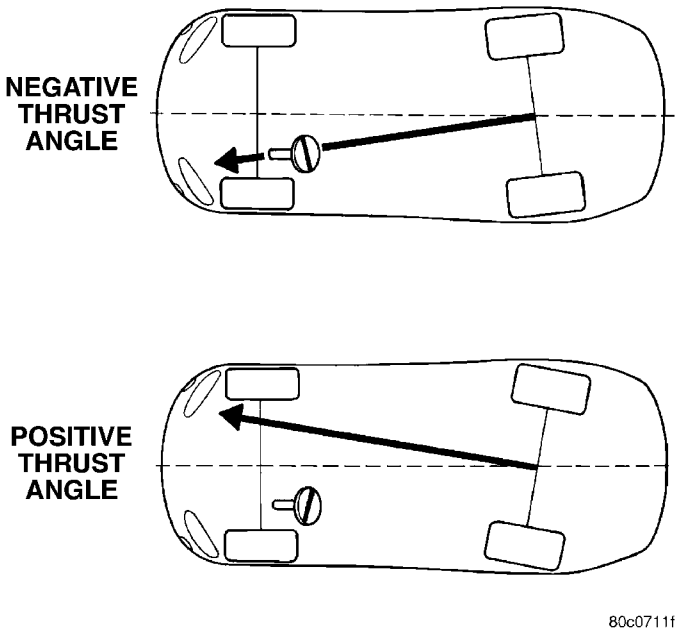

Fig. 6 Thrust Angle

DIAGNOSIS AND TESTING - SUSPENSION AND STEERING

CONDITION	POSSIBLE CAUSES	POTENTIAL CORRECTIONS
Front End Whine On Turns	1. Defective Wheel Bearing	1. Replace Wheel Bearing
	2. Incorrect Wheel Alignment	2. Check And Reset Wheel Alignment
	3. Worn Tires	3. Replace Tires
Front End Growl Or Grinding On Turns	1. Defective Wheel Bearing	1. Replace Wheel Bearing
	2. Engine Mount Grounding Against Frame Or Body Of Vehicle.	2. Check For Motor Mount Hitting Frame Rail And Reposition Engine As Required
	3. Worn Or Broken C/V Joint	3. Replace C/V Joint
	4. Loose Wheel Lug Nuts	4. Verify Wheel Lug Nut Torque
	5. Incorrect Wheel Alignment	5. Check And Reset Wheel Alignment
	6. Worn Tires	6. Replace Tires
Front End Clunk Or Snap On Turns	1. Loose Wheel Lug Nuts	1. Verify Wheel Lug Nut Torque
	2. Worn Or Broken C/V Joint	2. Replace C/V Joint
	3. Worn Or Loose Tie Rod Or Ball Joint	3. Tighten Or Replace Tie Rod End Or Ball Joint
	4. Worn Control Arm Bushing	4. Replace Control Arm Bushing
	5. Loose Sway Bar Or Upper Strut Attachment	5. Tighten Sway Bar Or Upper Strut Attachment To Specified Torque

WHEEL ALIGNMENT (Continued)

CONDITION	POSSIBLE CAUSES	POTENTIAL CORRECTIONS
Front End Whine With Vehicle Going Straight At A Constant Speed	1. Defective Wheel Bearing	1. Replace Wheel Bearing
	2. Incorrect Wheel Alignment	2. Check And Reset Wheel Alignment
	3. Worn Tires	3. Replace Tires
Front End Growl Or Grinding With Vehicle Going Straight At A Constant Speed	1. Engine Mount Grounding	1. Reposition Engine As Required
	2. Worn Or Broken C/V Joint	2. Replace C/V Joint
Front End Whine When Accelerating Or Decelerating	1. Worn Or Defective Transaxle Gears Or Bearings	1. Replace Transaxle Gears Or Bearings
Front End Clunk When Accelerating Or Decelerating	1. Worn Or Broken Engine Mount	1. Replace Engine Mount
	2. Worn Or Defective Transaxle Gears Or Bearings	2. Replace Transaxle Gears Or Bearings
	3. Loose Wheel Lug Nuts	3. Verify Wheel Lug Nut Torque
	4. Worn Or Broken C/V Joint	4. Replace C/V Joint
	5. Worn Or Loose Ball Joint	5. Tighten Or Replace Ball Joint
	6. Worn Or Loose Control Arm Bushing	6. Tighten To Specified Torque Or Replace Control Arm Bushing
	7. Loose Crossmember Bolts	7. Tighten Crossmember Bolts To Specified Torque
Road Wander	1. Incorrect Tire Pressure	1. Inflate Tires To Rcommended Pressure
	2. Incorrect Front Or Rear Wheel Toe	2. Check And Reset Front Wheel Toe
	3. Worn Wheel Bearings	3. Replace Wheel Bearing
	4. Worn Control Arm Bushings	4. Replace Control Arm Bushing
	5. Excessive Friction In Steering Gear	5. Replace Steering Gear
	6. Excessive Friction In Steering Shaft Coupling	6. Replace Steering Coupler
	7. Excessive Friction In Strut Upper Bearing	7. Replace Strut Bearing
Lateral Pull	1. Unequal Tire Pressure	1. Inflate All Tires To Recommended Pressure
	2. Radial Tire Lead	2. Perform Vehicle Lead Diagnosis And Correction Procedure - Refer To Tires And Wheels
	3. Incorrect Front Wheel Camber	3. Check And Reset Front Wheel Camber
	4. Power Steering Gear Imbalance	4. Replace Power Steering Gear
	5. Wheel Braking	5. Correct Braking Condition Causing Lateral Pull

WHEEL ALIGNMENT (Continued)

CONDITION	POSSIBLE CAUSES	POTENTIAL CORRECTIONS
Excessive Steering Free Play	1. Incorrect Steering Gear Adjustment	1. Adjust Or Replace Steering Gear
	2. Worn Or Loose Tie Rod Ends	2. Replace Or Tighten Tie Rod Ends
	3. Loose Steering Gear Mounting Bolts	3. Tighten Steering Gear Bolts To The Specified Torque
	4. Loose Or Worn Steering Shaft Coupler	4. Replace Steering Shaft Coupler
Excessive Steering Effort	1. Low Tire Pressure	1. Inflate All Tires To Recommended Pressure
	2. Lack Of Lubricant In Steering Gear	2. Replace Steering Gear
	3. Low Power Steering Fluid Level	3. Fill Power Steering Fluid Reservoir To Correct Level
	4. Loose Power Steering Pump Belt	4. Check and replace automatic belt tensioner as necessary. If drive belt is worn or glazed, replace belt.
	5. Lack Of Lubricant In Steering Ball Joints	5. Lubricate Or Replace Steering Ball Joints
	6. Steering Gear Malfunction	6. Replace Steering Gear
	7. Lack Of Lubricant In Steering Coupler	7. Replace Steering Coupler

STANDARD PROCEDURE

STANDARD PROCEDURE - CURB HEIGHT MEASUREMENT

The wheel alignment is to be checked and all alignment adjustments made with the vehicle at its required curb height specification.

Vehicle height is to be checked with the vehicle on a flat, level surface, preferably a vehicle alignment rack. The tires are to be inflated to the recommended pressure. All tires are to be the same size as standard equipment. Vehicle height is checked with the fuel tank full of fuel, and no passenger or luggage compartment load.

Vehicle height is not adjustable. If the measurement is not within specifications, inspect the vehicle for bent or weak suspension components. Compare the parts tag on the suspect coil spring(s) to the parts book and the vehicle sales code, checking for a match. Once removed from the vehicle, compare the coil spring height to a correct new or known good coil spring. The heights should vary if the suspect spring is weak.

NOTE: Prior to reading the curb height measurement, the front an rear of the vehicle should be jounced. Induce jounce by grasping the center of the rear, then front bumper (or fascia) and jouncing the vehicle an equal number of times. Release the bumper at the bottom of the jounce cycle.

(1) Measure from the edge of the wheel opening fender lip directly above the wheel center (spindle) down to the floor or alignment rack surface.

(2) When measuring, maximum left-to-right differential is not to exceed 10 mm (0.39 in.).

(3) Compare the measurements to specifications listed in the following CURB HEIGHT SPECIFICATIONS chart.

CURB HEIGHT SPECIFICATIONS

VEHICLE	FRONT	REAR
ALL	695 mm ± 8 mm 27.37 in. ± 0.32 in.	716 mm ± 8 mm 28.27 in. ± 0.32 in.

WHEEL ALIGNMENT (Continued)

STANDARD PROCEDURE - WHEEL ALIGNMENT

PRE-WHEEL ALIGNMENT INSPECTION

CAUTION: If during the inspection the front suspension crossmember shows any sign of impact damage, the steering column lower coupling must be inspected. (Refer to 19 - STEERING/COLUMN/ STEERING COUPLING - DIAGNOSIS AND TESTING)

Before any attempt is made to change or correct the wheel alignment, the following inspection and necessary corrections must be made to the vehicle to ensure proper alignment.

(1) Be sure the fuel tank is full of fuel. If the fuel tank is not full, the reduction in weight will affect the curb height of the vehicle and the alignment specifications.

(2) The passenger and luggage compartments of the vehicle should be free of any load that is not factory equipment.

(3) Check the tires on the vehicle. The tires are to be inflated to the recommended air pressure. All tires must be the same size and in good condition with approximately the same tread wear.

(4) Check the front tire and wheel assemblies for excessive radial runout.

(5) Inspect all suspension component fasteners for looseness and proper torque.

(6) Inspect the lower front ball joints and all steering linkage for looseness and any sign of wear or damage.

(7) Inspect the rubber bushings on all the suspension components for signs of wear or deterioration. If any bushings show signs of wear or deterioration, they should be replaced prior to aligning the vehicle.

(8) Check vehicle curb height to verify it is within specifications. (Refer to 2 - SUSPENSION/WHEEL ALIGNMENT - STANDARD PROCEDURE)

WHEEL ALIGNMENT SETUP

(1) Position the vehicle on an alignment rack.

(2) Install all required alignment equipment on the vehicle, per the alignment equipment manufacturer's instructions. On this vehicle, a four-wheel alignment is recommended.

NOTE: Prior to reading the vehicle's alignment readouts, the front and rear of vehicle should be jounced. Induce jounce (rear first, then front) by grasping the center of the bumper and jouncing each end of vehicle an equal number of times. The bumper should always be released when vehicle is at the bottom of the jounce cycle.

(3) Read the vehicle's current front and rear alignment settings. Compare the vehicle's current alignment settings to the vehicle specifications for camber, caster and toe-in. (Refer to 2 - SUSPENSION/ WHEEL ALIGNMENT - SPECIFICATIONS)

REAR CAMBER AND TOE

Rear camber and rear toe settings on this vehicle are determined at the time the vehicle is designed, by the location of the vehicle's suspension components. This is referred to as Net Build. The result is no required adjustment of camber and toe after the vehicle is built or when servicing the suspension components. Thus, when performing a wheel alignment, rear camber and toe are not normally considered adjustable angles. Although not normally considered adjustable, rear camber and toe can be changed when necessary through the use of specially designed shims. To install shims, use the following procedure.

(1) Raise the vehicle until its tires are off the floor or alignment rack.

(2) Remove the tire and wheel assembly.

(3) Access the spindle mounting bolts following the Spindle Removal procedure found in Rear Suspension. (Refer to 2 - SUSPENSION/REAR/SPINDLE - REMOVAL)

(4) Loosen the four spindle mounting bolts just enough to slide the adjustment shim in between the spindle and the axle mounting flange.

NOTE: Each shim is 0.010 in. (0.254 mm) thick. Do not place more than two shims at any one spindle.

(5) Hook the shim on the mounting bolts utilizing the slots cut into the shim. Refer to the following list for shim placement:

- To achieve more positive camber, place the shim across the two upper mounting bolts.
- To achieve more negative camber, place the shim across the two lower mounting bolts.
- To achieve more positive toe, place the shim across the two rearward mounting bolts.
- To achieve more negative toe, place the shim across the two forward mounting bolts.

(6) Tighten the four mounting bolts to a torque of 95 N·m (70 ft. lbs.).

(7) Reassemble the rear brake following the Spindle Installation procedure found in Rear Suspension. (Refer to 2 - SUSPENSION/REAR/SPINDLE - INSTALLATION)

(8) Reinstall the tire and wheel assembly. Tighten the wheel mounting nuts to a torque of 135 N·m (100 ft. lbs.).

(9) Lower the vehicle.

(10) Once rear camber and toe have been set to specifications, check and adjust the front wheel alignment as necessary. Refer to FRONT CAMBER AND CASTER and FRONT TOE within this wheel alignment service procedure.

WHEEL ALIGNMENT (Continued)

FRONT CAMBER AND CASTER

Front camber and caster settings on this vehicle are determined at the time the vehicle is designed, by the location of the vehicle's suspension components. This is referred to as Net Build. The result is no required adjustment of camber and caster after the vehicle is built or when servicing the suspension components. Thus, when performing a wheel alignment, caster and camber are not normally considered adjustable angles. Camber and caster should be checked to ensure they meet vehicle specifications. (Refer to 2 - SUSPENSION/WHEEL ALIGNMENT - SPECIFICATIONS)

If front camber is found not to meet alignment specifications, it can be adjusted using an available camber adjustment bolt package. Before installing a camber adjustment bolt package on a vehicle found to be outside the specifications, inspect the suspension components for any signs of damage or bending.

No adjustment can be made to the caster setting on this vehicle. If the vehicle's caster is not within alignment specifications, check for damaged suspension components or body parts.

CAUTION: Do not attempt to adjust the vehicles wheel alignment by heating or bending any of the suspension components.

CAMBER ADJUSTMENT BOLT PACKAGE INSTALLATION

The camber adjustment bolt package contains new bolts and nuts for attaching the strut clevis bracket to the steering knuckle. The bolts contained in the package are slightly undersize allowing for movement between the strut clevis bracket and the steering knuckle. The movement allowed by the undersize bolts provide approximately two degrees of camber adjustment per side of the vehicle. To install and adjust the camber adjustment bolt package, follow the procedure below.

(1) Raise the vehicle until its tires are not supporting the weight of the vehicle.

CAUTION: The knuckle to strut assembly attaching bolt shanks are serrated and must not be turned during removal. Remove the nuts while holding the bolts stationary.

(2) Remove the original upper bolt attaching the strut clevis bracket to the knuckle (Fig. 7).

(3) Install a bolt from the adjustment package into the hole where the original bolt was removed. Install the bolt from the rear.

(4) Install a nut provided in adjustment package on the replacement bolt. Tighten the nut until it's snug, but still allowing the knuckle to slide in the clevis bracket.

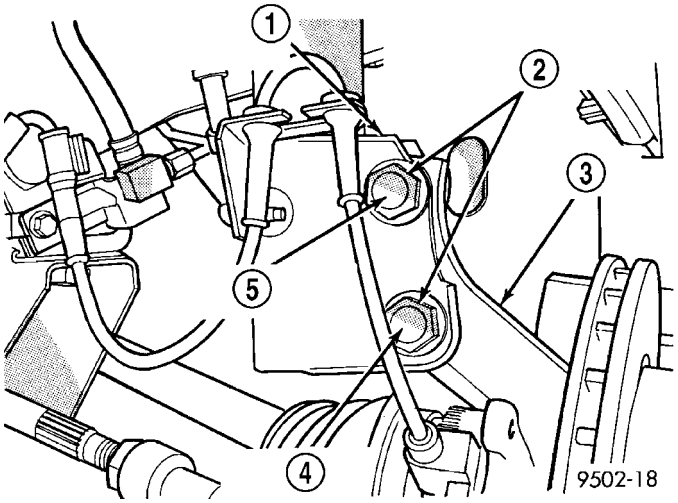

Fig. 7 Front Strut Clevis Bracket Attaching Bolts

1 - STRUT CLEVIS BRACKET
2 - STRUT CLEVIS BRACKET TO STEERING KNUCKLE ATTACHING BOLTS
3 - STEERING KNUCKLE
4 - LOOSEN THIS BOLT
5 - REMOVE AND REPLACE THIS BOLT

(5) Remove the original lower bolt.

(6) Install a bolt from the adjustment package into the bottom hole of the strut clevis bracket. Install the bolt from the rear.

(7) Install a nut provided in adjustment package on the replacement bolt. Tighten the nut until it's snug.

(8) Reinstall the tire and wheel assembly. Tighten the wheel mounting nuts to a torque of 135 N·m (100 ft. lbs.)

(9) Perform the above procedure to opposite strut as required.

(10) Lower the vehicle and jounce the front and rear of the vehicle.

(11) Adjust the front camber to the preferred setting by pushing or pulling on the top of the tire. When camber is set to specifications, tighten the upper and lower strut clevis bracket bolts. Again jounce the front and rear of the vehicle, then verify the camber settings.

(12) Torque front strut clevis bracket-to-steering knuckle attaching bolts to 53 N·m (40 ft. lbs.), plus an additional 1/4 turn after the torque is met.

(13) Once camber is within specifications, adjust toe to meet the preferred specification setting. Refer to FRONT TOE within this wheel alignment service procedure.

WHEEL ALIGNMENT (Continued)

FRONT TOE

(1) Center the steering wheel and lock it in place using a steering wheel clamp.

CAUTION: Do not twist the inner tie rod-to-steering gear rubber boots while turning the inner tie rod during the front toe adjustment.

(2) Loosen the tie rod adjusting jam nuts (Fig. 8). Grasp each inner tie rod at its splines and rotate it one way or the other until the front wheel toe is set to the preferred specification. (Refer to 2 - SUSPENSION/WHEEL ALIGNMENT - SPECIFICATIONS)

(3) Tighten tie rod adjusting jam nuts to a torque of 75 N·m (55 ft. lbs.).

(4) Make sure the inner tie rod-to-steering gear rubber boots are not twisted. If twisted, loosen the boot clamp at the inner tie rod and move the boot as necessary.

(5) Remove steering wheel clamp.

(6) Remove the alignment equipment.

(7) Road test the vehicle to verify the steering wheel is straight and the vehicle does not pull or wander.

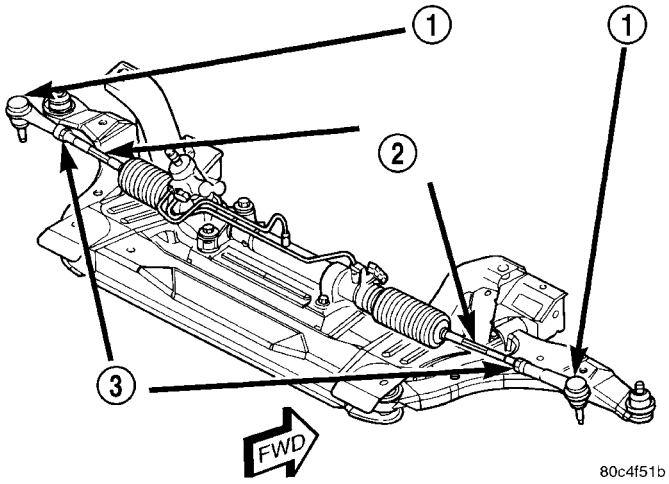

Fig. 8 Jam Nut Locations (Typical)

1 - OUTER TIE ROD
2 - INNER TIE ROD SPLINES
3 - JAM NUT

NOTE: All wheel alignments are to be set with the vehicle at curb height. (Refer to 2 - SUSPENSION/ WHEEL ALIGNMENT - STANDARD PROCEDURE)

SPECIFICATIONS

WHEEL ALIGNMENT

NOTE: All specifications are given in degrees.

FRONT WHEEL ALIGNMENT	PREFERRED SETTING	ACCEPTABLE RANGE
CAMBER	0.00°	-0.40° to +0.40°
Cross Camber (Maximum Side-To-Side Difference)	0.00°	0.50
CASTER	+2.45°	+1.45° to +3.45°
Cross Caster (Maximum Side-To-Side Difference)	0.00°	1.00°
TOTAL TOE*	+0.10°	0.00° to +0.20°
REAR WHEEL ALIGNMENT	**PREFERRED SETTING**	**ACCEPTABLE RANGE**
CAMBER	0.00°	-0.25° to +0.25°
TOTAL TOE*	+0.20°	+0.00° to +0.40°
THRUST ANGLE	0.00°	-0.30° to +0.30°

Note:

* TOTAL TOE is the sum of both the left and right wheel toe settings. TOTAL TOE must be equally split between each front wheel to ensure the steering wheel is centered after setting toe. Positive toe (+) is toe-in and negative toe (−) is Toe-out.

DIFFERENTIAL & DRIVELINE

TABLE OF CONTENTS

page

HALF SHAFT 1

HALF SHAFT

TABLE OF CONTENTS

page

HALF SHAFT
DESCRIPTION 1
OPERATION 2
DIAGNOSIS AND TESTING - HALFSHAFT DIAGNOSIS 3
REMOVAL
REMOVAL—EXCEPT DIESEL AND TURBO MODELS 4
REMOVAL—DIESEL AND TURBO MODELS . . 6
INSTALLATION
INSTALLATION—EXCEPT DIESEL AND TURBO MODELS 8
INSTALLATION—DIESEL AND TURBO MODELS 10
SPECIFICATIONS - TORQUE 12
SPECIAL TOOLS
HALFSHAFT 12
CV BOOT - INNER
REMOVAL 13
INSTALLATION 14
CV BOOT - OUTER
REMOVAL 18
INSTALLATION 19

HALF SHAFT

DESCRIPTION

All Models Except Diesel and Turbo

1.6L, 2.0L and 2.4L naturally aspirated models equipped with either an automatic or manual transmission use an unequal-length halfshaft system. The system incorporates two halfshaft assemblies (left and right) that consist of an inner and outer constant velocity (CV) joint and a solid interconnecting shaft (Fig. 1). The right halfshaft is longer than the left due to transaxle packaging and powertrain design.

Halfshafts used on both the right and left sides of the vehicle use a tuned rubber damper weight mounted to the interconnecting shaft (Fig. 1). The damper weight applications vary by which side of the vehicle the halfshaft is located on and the transmission application of the vehicle. When replacing a halfshaft, be sure the replacement halfshaft has the same damper weight as the original.

HALF SHAFT (Continued)

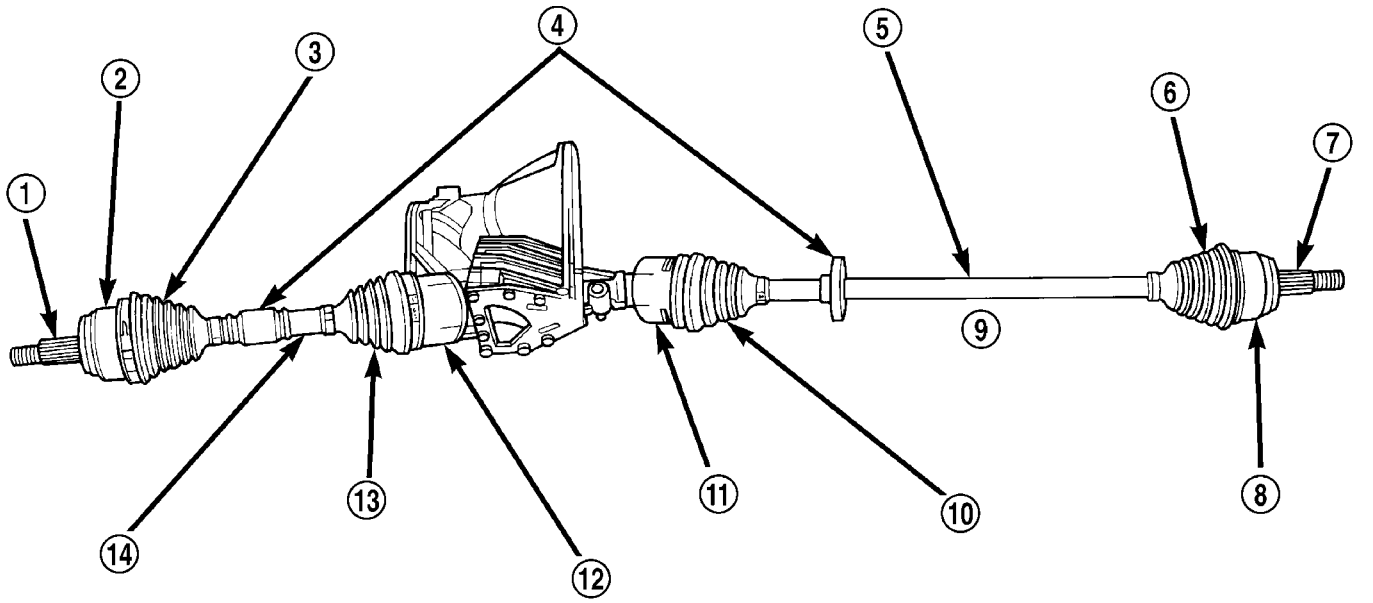

Fig. 1 Unequal Length Halfshaft System

1 - STUB AXLE
2 - OUTER C/V JOINT
3 - OUTER C/V JOINT BOOT
4 - TUNED RUBBER DAMPER WEIGHT
5 - INTERCONNECTING SHAFT - RH
6 - OUTER C/V JOINT BOOT
7 - STUB AXLE
8 - OUTER C/V JOINT
9 - RIGHT HALFSHAFT
10 - INNER TRIPOD JOINT BOOT
11 - INNER TRIPOD JOINT
12 - INNER TRIPOD JOINT
13 - INNER TRIPOD JOINT BOOT
14 - INTERCONNECTING SHAFT - LH

Diesel and Turbo Models

Vehicles equipped with the 2.2L Turbo Diesel and the 2.4L Turbo Gasoline utilize an equal-length halfshaft system. The system incorporates two halfshaft assemblies (left and right) that consist of an inner and outer constant velocity (CV) joint and a solid interconnecting shaft, and an intermediate shaft/bearing assembly as shown in (Fig. 2)

The left halfshaft uses a tuned-rubber damper weight mounted to the interconnecting shaft (Fig. 2). When replacing a halfshaft, be sure the replacement halfshaft has the same damper weight as the original.

Both halfshaft assemblies use the same type of inner and outer joints. The inner joint of both halfshaft assemblies is a tripod joint, and the outer joint of both halfshaft assemblies is a Rzeppa joint. Both tripod joints and Rzeppa joints are true constant velocity (C/V) joint assemblies. The inner tripod joint allows for the changes in halfshaft length through the jounce and rebound travel of the front suspension.

On vehicles equipped with ABS brakes, the outer C/V joint is equipped with a tone wheel used to determine vehicle speed for ABS brake operation.

The left halfshaft inner tripod joint and the intermediate shaft are both splined into the transaxle side gears. The inner tripod joints are retained using a snap ring located in the stub shaft of the tripod joint. The outer C/V joint has a stub shaft that is splined into the wheel hub and retained by a hub nut, nut lock, wave washer and cotter pin (Fig. 3).

NOTE: This vehicle does not use a rubber–lip bearing seal as on previous front–wheel–drive cars to prevent contamination of the front wheel bearing. On these vehicles, the face of the outer C/V joint fits deeply into the steering knuckle, using a close outer C/V joint–to–steering knuckle fit. This design deters direct water splash on bearing seal while allowing any water that gets in, to run out the bottom of the steering knuckle bearing bore. It is important to thoroughly clean the outer C/V joint and the wheel bearing area in the steering knuckle before it is assembled after servicing.

OPERATION

Halfshaft assemblies are designed to transmit power from the transaxle to the front wheels, while allowing for powertrain and suspension flex.

HALF SHAFT (Continued)

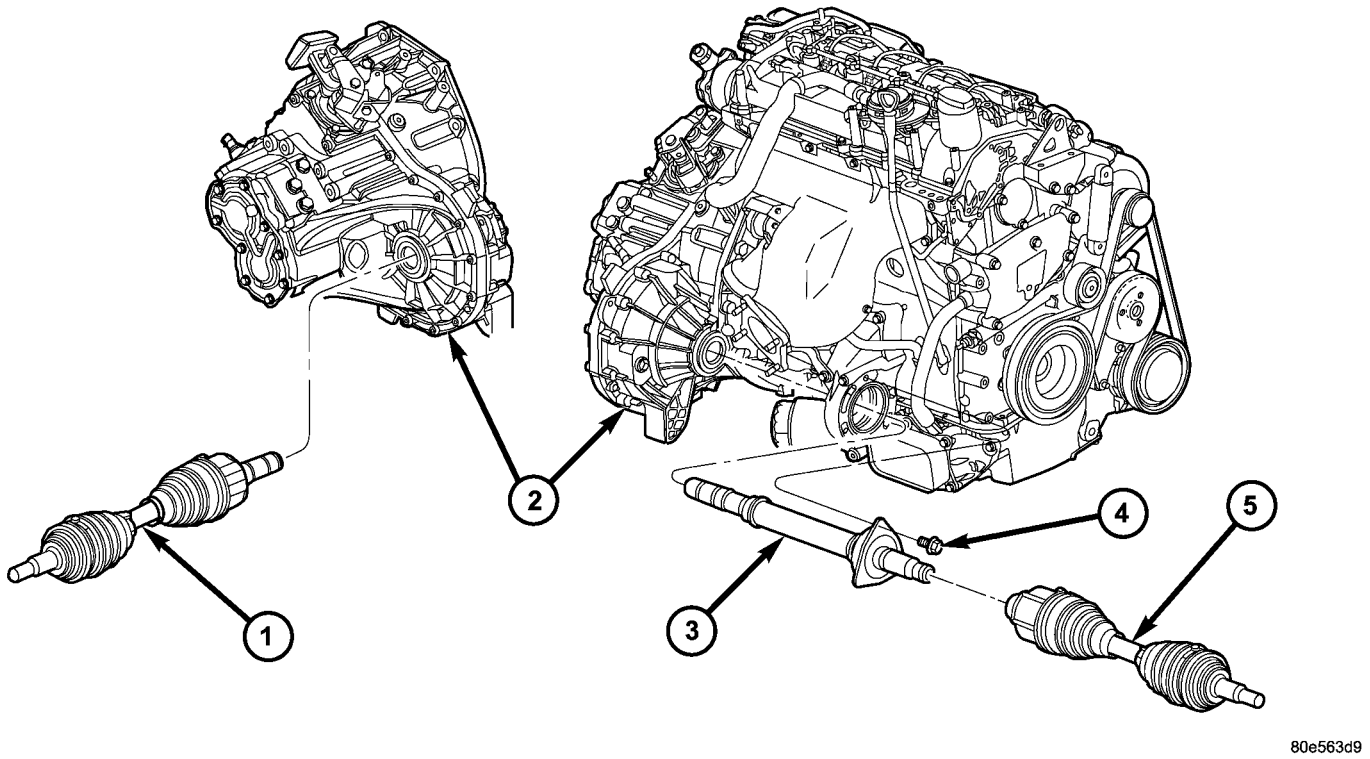

Fig. 2 Halfshaft and Intermediate Shaft (2.2L TD Shown—2.4L Turbo Similar)

1 - HALFSHAFT (LH)
2 - TRANSAXLE
3 - INTERMEDIATE SHAFT
4 - BOLT (3)
5 - HALFSHAFT (RH)

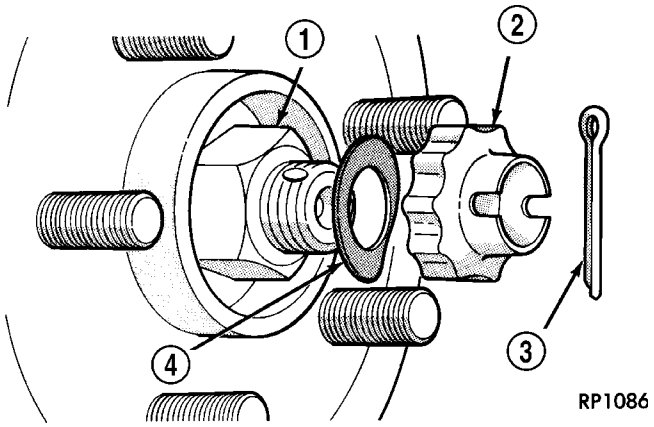

Fig. 3 Driveshaft Retaining Hardware

1 - HUB NUT
2 - NUT LOCK
3 - COTTER PIN
4 - SPRING WASHER

DIAGNOSIS AND TESTING - HALFSHAFT DIAGNOSIS

VEHICLE INSPECTION

(1) Check for grease in the vicinity of the inboard tripod joint and outboard C/V joint; this is a sign of inner or outer joint seal boot or seal boot clamp damage.

NOISE AND/OR VIBRATION IN TURNS

A clicking noise and/or a vibration in turns could be caused by one of the following conditions:

(1) Loose hub nut. Using a click-style torque wrench, torque hub nut to 244 N·m (180 ft. lbs.).

(2) Damaged outer C/V or inner tripod joint seal boot or seal boot clamps, which is evident by the presence of grease slung outward from the joint. This will result in the loss and/or contamination of the joint grease, resulting in inadequate lubrication of the joint.

(3) Noise may also be caused by another component of the vehicle coming in contact with the halfshafts.

CLUNKING NOISE DURING ACCELERATION

This noise may be a result of one of the following conditions:

(1) A torn seal boot on the inner or outer joint of the halfshaft assembly, which is evident by the presence of grease slung outward from the joint. This will result in the loss and/or contamination of the joint grease, resulting in inadequate lubrication of the joint.

HALF SHAFT (Continued)

(2) A loose or missing clamp on the inner or outer joint of the halfshaft assembly. This may be accompanied by the visible loss of grease.

(3) A damaged or worn halfshaft C/V joint. Isolate the noise to one side of the vehicle. Replace only the affected side. Replacing both halfshafts is not necessary.

SHUDDER OR VIBRATION DURING ACCELERATION

(1) A worn or damaged halfshaft inner tripod joint. Isolate the condition to one side of the vehicle. Replace only the affected side. Replacing both halfshafts is not necessary.

(2) A sticking tripod joint spider assembly (inner tripod joint only). Isolate the condition to one side of the vehicle. Replace only the affected side. Replacing both halfshafts is not necessary.

(3) Improper wheel balance.

VIBRATION AT HIGHWAY SPEEDS

(1) Foreign material (mud, etc.) packed on the backside of the wheel(s).

(2) Out of balance front tires or wheels.

(3) Improper tire and/or wheel runout.

REMOVAL

REMOVAL—EXCEPT DIESEL AND TURBO MODELS

CAUTION: Boot sealing is vital to retain special lubricants and to prevent foreign contaminants from entering the C/V joint. Mishandling, such as allowing the assemblies to dangle unsupported, or pulling or pushing the ends can cut boots or damage C/V joints. During removal and installation procedures, always support both ends of the halfshaft to prevent damage.

CAUTION: The halfshaft, when installed, acts as a bolt and secures the front hub/bearing assembly. If vehicle is to be supported or moved on its wheels with a halfshaft removed, install a PROPER–SIZED BOLT AND NUT through front hub. Tighten bolt and nut to 244 N·m (180 ft. lbs.). This will ensure that the hub bearing cannot loosen.

(1) Disconnect battery negative cable.

(2) Place transaxle in gated park.

(3) Raise vehicle on hoist.

(4) Remove wheel and tire assembly (Fig. 4).

(5) Remove the cotter pin, nut lock, and spring washer, and hub nut from the end of the outer C/V joint stub axle (Fig. 5).

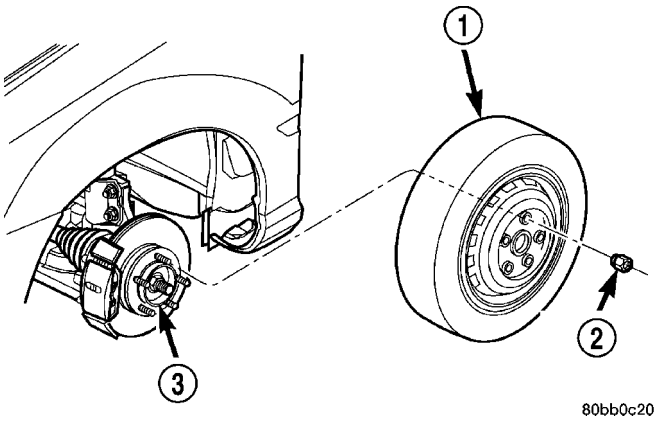

Fig. 4 Wheel and Tire Removal

1 - WHEEL/TIRE ASSY.
2 - LUG NUT (5)
3 - HUB

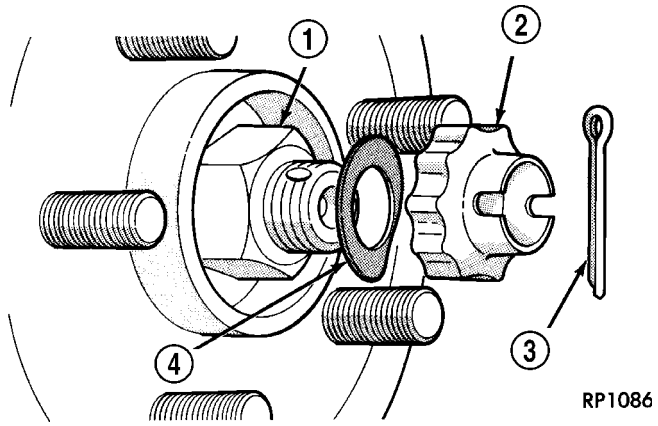

Fig. 5 Halfshaft Hub Nut & Retaining Hardware

1 - HUB NUT
2 - NUT LOCK
3 - COTTER PIN
4 - SPRING WASHER

(6) If equipped with ABS, disconnect the front wheel speed sensor and secure harness out of the way.

(7) Remove nut and bolt (Fig. 6) retaining ball joint stud into steering knuckle.

NOTE: Use caution when separating ball joint stud from steering knuckle, so ball joint seal does not get damaged.

(8) Separate ball joint stud from steering knuckle by prying down on lower control arm (Fig. 7).

NOTE: Care must be taken not to separate the inner C/V joint during this operation. Do not allow halfshaft to hang by inner C/V joint, halfshaft must be supported.

HALF SHAFT (Continued)

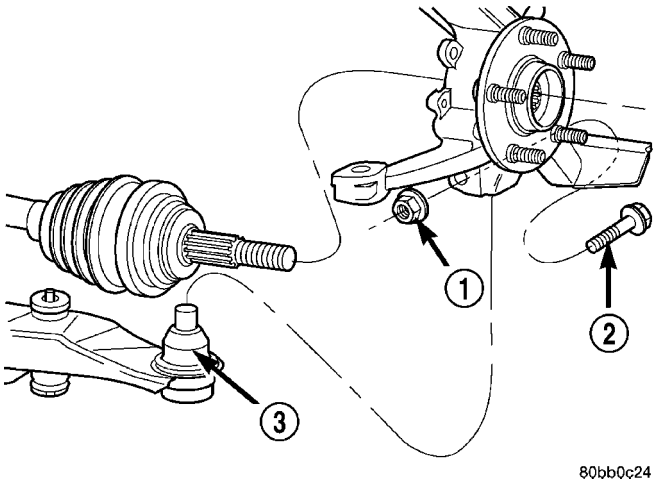

Fig. 6 Steering Knuckle at Lower Control Arm Ball Joint

1 - NUT
2 - BOLT
3 - BALL JOINT

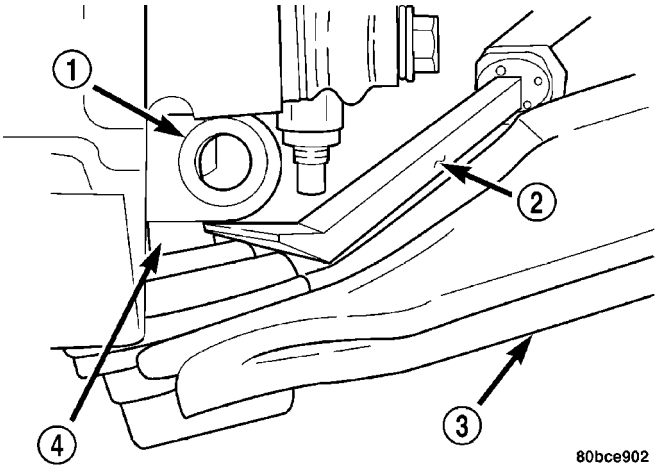

Fig. 7 Separating Lower Control Arm from Steering Knuckle

1 - STEERING KNUCKLE
2 - PRY BAR
3 - LOWER CONTROL ARM
4 - BALL JOINT STUD

(9) Remove halfshaft from steering knuckle by pulling outward on knuckle while pressing in on halfshaft. Support outer end of halfshaft assembly. If difficulty in separating halfshaft from hub is encountered, **do not strike shaft with hammer,** instead use puller 1026 to separate (Fig. 8).

(10) Support outer end of the halfshaft assembly.

(11) Remove the inner tripod joints from the side gears of the transaxle using a punch to dislodge the inner tripod joint retaining ring from the transaxle side gear. If removing the right side inner tripod joint, position the punch to the inner tripod joint extraction groove (if equipped). Strike the punch

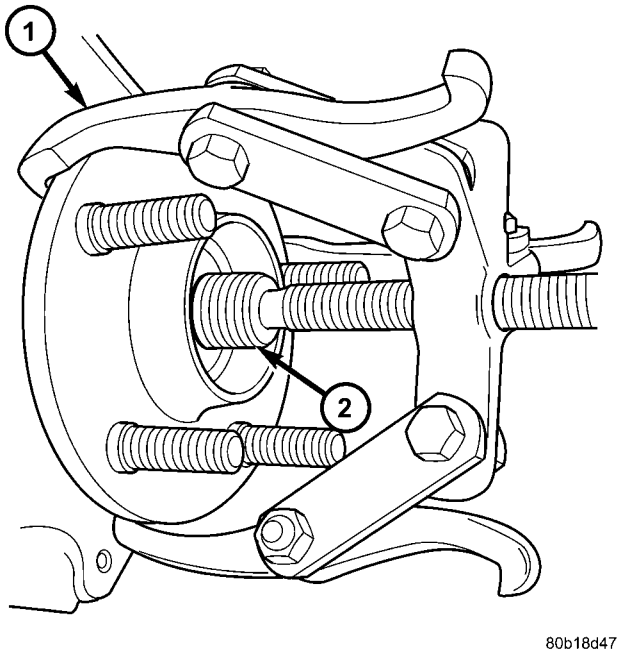

Fig. 8 Separating Halfshaft from Hub/Bearing

1 - PULLER 1026
2 - HALFSHAFT

sharply with a hammer to dislodge the right inner joint from the side gear. If removing the left side inner tripod joint, position the punch to the inner tripod joint extraction groove (Fig. 9). Strike the punch sharply with a hammer to dislodge the left inner tripod joint from the side gear.

NOTE: Removal of the inner tripod joints is made easier if you apply outward pressure on the joint as you strike the punch with a hammer. DO NOT PULL ON INTERCONNECTING SHAFT TO REMOVE, AS THE INNER JOINT WILL BECOME SEPARATED.

(12) Hold inner tripod joint and interconnecting shaft of halfshaft assembly (Fig. 10). Remove inner tripod joint from transaxle by pulling it straight out of transaxle side gear and transaxle oil seal. **When removing tripod joint, do not let spline or snap ring drag across sealing lip of the transaxle to tripod joint oil seal. When tripod joint is removed from transaxle, some fluid will leak out.**

CAUTION: The halfshaft, when installed, acts as a bolt and secures the front hub/bearing assembly. If vehicle is to be supported or moved on its wheels with a halfshaft removed, install a PROPER–SIZED BOLT AND NUT through front hub. Tighten bolt and nut to 244 N·m (180 ft. lbs.). This will ensure that the hub bearing cannot loosen.

HALF SHAFT (Continued)

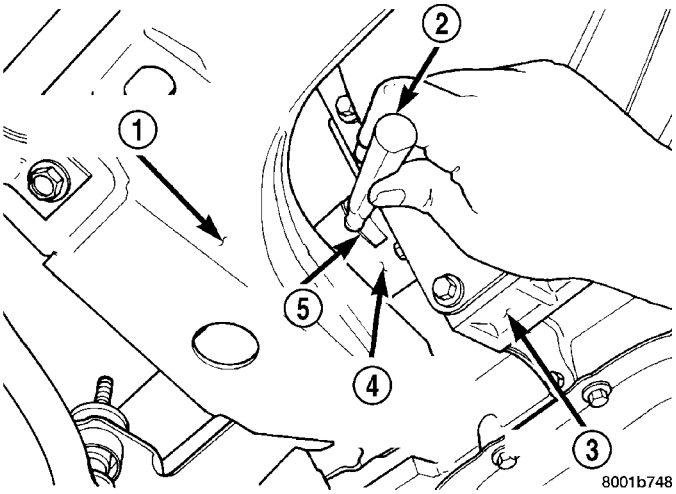

Fig. 9 Disengaging Left Inner Tripod Joint from Transaxle

1 - FRONT SUSPENSION CROSSMEMBER
2 - PUNCH
3 - TRANSAXLE
4 - HALFSHAFT INNER TRIPOD JOINT
5 - NOTCH

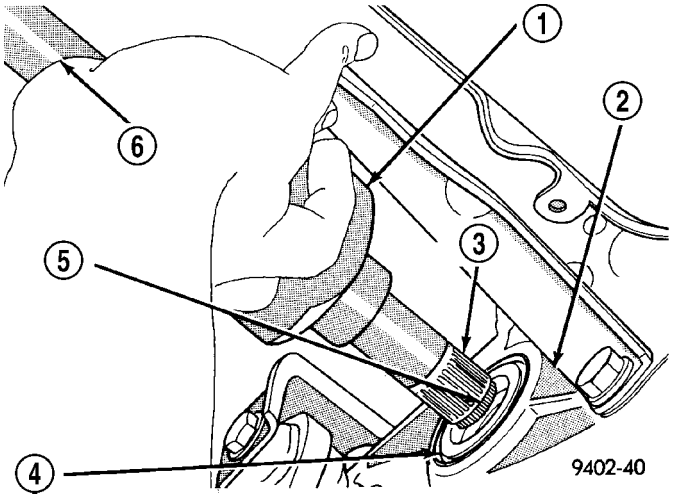

Fig. 10 Tripod Joint Removal from Transaxle

1 - INNER TRIPOD JOINT
2 - TRANSAXLE
3 - SPLINE
4 - OIL SEAL
5 - SNAP RING
6 - INTERCONNECTING SHAFT

REMOVAL—DIESEL AND TURBO MODELS

CAUTION: Boot sealing is vital to retain special lubricants and to prevent foreign contaminants from entering the C/V joint. Mishandling, such as allowing the assemblies to dangle unsupported, or pulling or pushing the ends can cut boots or damage C/V joints. During removal and installation procedures, always support both ends of the halfshaft to prevent damage.

CAUTION: The halfshaft, when installed, acts as a bolt and secures the front hub/bearing assembly. If vehicle is to be supported or moved on its wheels with a halfshaft removed, install a PROPER–SIZED BOLT AND NUT through front hub. Tighten bolt and nut to 244 N·m (180 ft. lbs.). This will ensure that the hub bearing cannot loosen.

(1) Disconnect battery negative cable.
(2) Place transaxle in gated park.
(3) Raise vehicle on hoist.
(4) Remove wheel and tire assembly (Fig. 11).

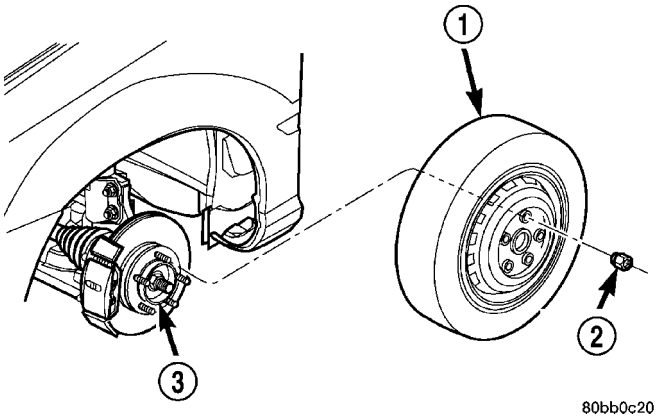

Fig. 11 Wheel and Tire Removal

1 - WHEEL/TIRE ASSY.
2 - LUG NUT (5)
3 - HUB

(5) Remove the cotter pin, nut lock, and spring washer, and hub nut from the end of the outer C/V joint stub axle (Fig. 12).

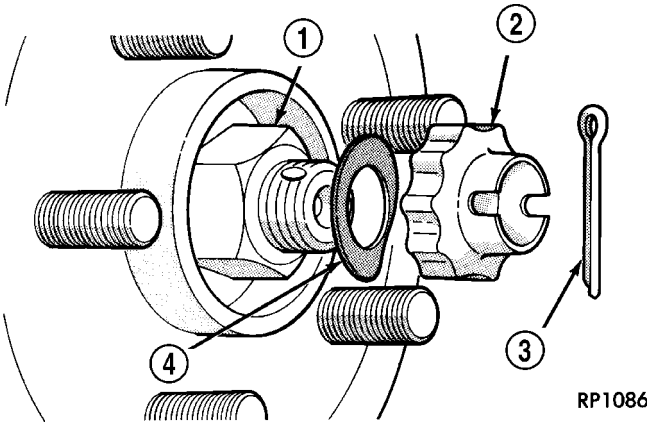

Fig. 12 Halfshaft Hub Nut & Retaining Hardware

1 - HUB NUT
2 - NUT LOCK
3 - COTTER PIN
4 - SPRING WASHER

(6) If equipped with ABS, disconnect the front wheel speed sensor and secure harness out of the way.

HALF SHAFT (Continued)

(7) Remove nut and bolt (Fig. 13) retaining ball joint stud into steering knuckle.

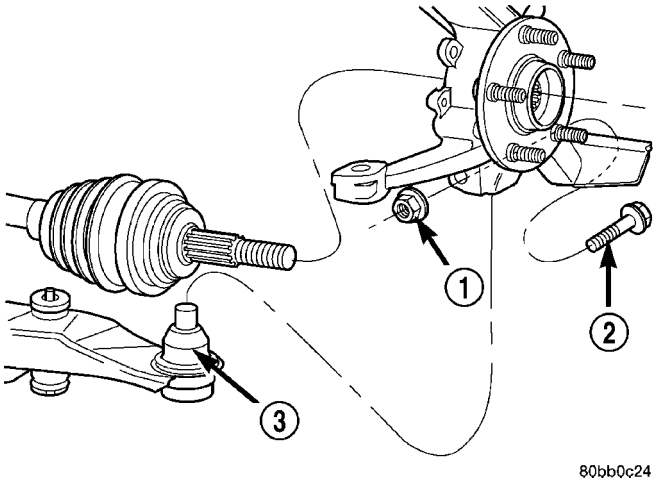

Fig. 13 Steering Knuckle at Lower Control Arm Ball Joint

1 - NUT
2 - BOLT
3 - BALL JOINT

NOTE: Use caution when separating ball joint stud from steering knuckle, so ball joint seal does not get damaged.

(8) Separate ball joint stud from steering knuckle by prying down on lower control arm (Fig. 14).

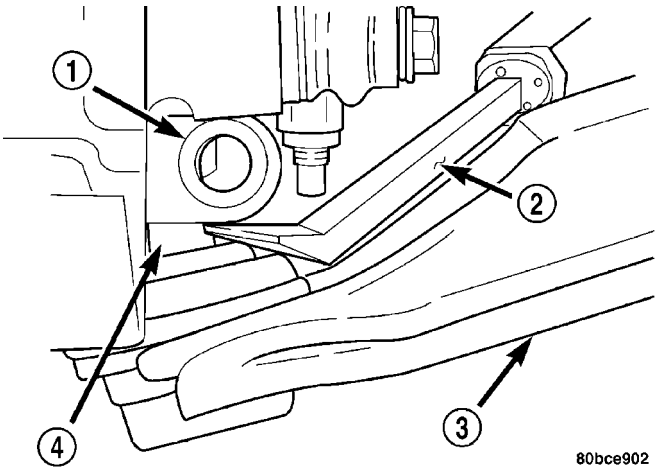

Fig. 14 Separating Lower Control Arm from Steering Knuckle

1 - STEERING KNUCKLE
2 - PRY BAR
3 - LOWER CONTROL ARM
4 - BALL JOINT STUD

NOTE: Care must be taken not to separate the inner C/V joint during this operation. Do not allow half-shaft to hang by inner C/V joint, halfshaft must be supported.

(9) Remove halfshaft from steering knuckle by pulling outward on knuckle while pressing in on half-shaft. Support outer end of halfshaft assembly. If difficulty in separating halfshaft from hub is encountered, **do not strike shaft with hammer,** instead use puller 1026 to separate (Fig. 15).

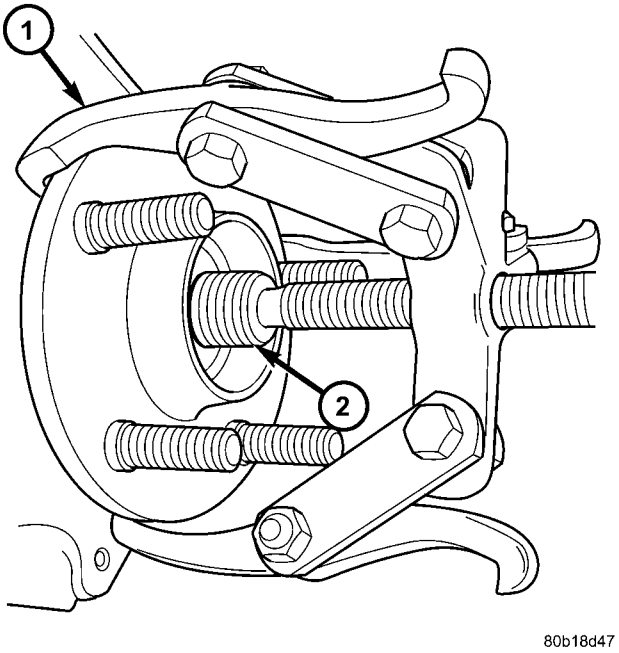

Fig. 15 Separating Halfshaft from Hub/Bearing

1 - PULLER 1026
2 - HALFSHAFT

(10) Support outer end of the halfshaft assembly.

NOTE: When left halfshaft is removed from transaxle, some fluid may leak out.

NOTE: Removal of the inner tripod joints is made easier if you apply outward pressure on the joint as you strike the punch with a hammer. DO NOT PULL ON INTERCONNECTING SHAFT TO REMOVE, AS THE INNER JOINT WILL BECOME SEPARATED.

(11) Remove halfshaft(s) (Fig. 16) (Fig. 17). **Left halfshaft:** While applying outward pressure on joint by hand, dislodge inner tripod joint from differential side gear by striking outward with a punch at extraction groove. When removing tripod joint and half-shaft, do not let spline or snap ring drag across sealing lip of the transaxle to tripod joint oil seal. **Right halfshaft:** Slide inner tripod joint off of intermediate shaft. If difficulty is encountered, dislodge joint from intermediate shaft using punch.

(12) If intermediate shaft is to be removed, remove three (3) intermediate shaft bearing-to-bracket bolts (Fig. 16). 2.4L turbo models utilize two (2) interme-

HALF SHAFT (Continued)

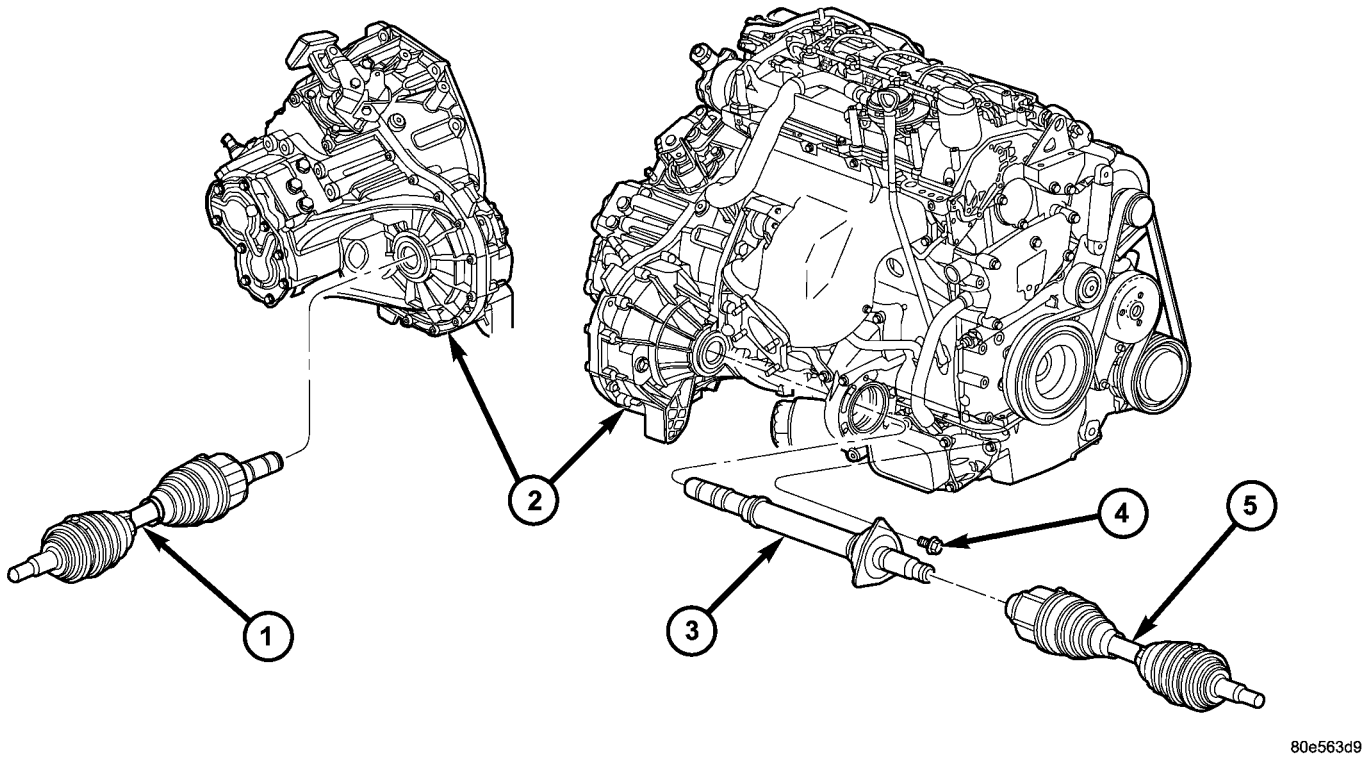

Fig. 16 Halfshaft and Intermediate Shaft—2.2L Turbo Diesel

1 - HALFSHAFT (LH)
2 - TRANSAXLE
3 - INTERMEDIATE SHAFT
4 - BOLT (3)
5 - HALFSHAFT (RH)

diate shaft bearing-to-bracket bolts. Remove intermediate shaft bearing/shaft assembly from transaxle.

CAUTION: The halfshaft, when installed, acts as a bolt and secures the front hub/bearing assembly. If vehicle is to be supported or moved on its wheels with a halfshaft removed, install a PROPER–SIZED BOLT AND NUT through front hub. Tighten bolt and nut to 244 N·m (180 ft. lbs.). This will ensure that the hub bearing cannot loosen.

INSTALLATION

INSTALLATION—EXCEPT DIESEL AND TURBO MODELS

CAUTION: Boot sealing is vital to retain special lubricants and to prevent foreign contaminants from entering the C/V joint. Mishandling, such as allowing the assemblies to dangle unsupported, or pulling or pushing the ends can cut boots or damage C/V joints. During removal and installation procedures, always support both ends of the halfshaft to prevent damage.

(1) Thoroughly clean spline and oil seal sealing surface, on tripod joint. Lightly lubricate oil seal sealing surface on tripod joint with fresh clean transmission lubricant.

(2) Holding halfshaft assembly by tripod joint and interconnecting shaft, install tripod joint into transaxle side gear as far as possible by hand.

(3) Carefully align tripod joint with transaxle side gears. Then grasp halfshaft interconnecting shaft and push tripod joint into transaxle side gear until fully seated. **Test that snap ring is fully engaged with side gear by attempting to remove tripod joint from transaxle by hand. If snap ring is fully engaged with side gear, tripod joint will not be removable by hand.**

(4) Clean all debris and moisture out of steering knuckle (Fig. 18).

(5) Ensure that front of outer C/V joint, which fits into steering knuckle (Fig. 19), is free of debris and moisture before assembling into steering knuckle.

(6) Slide halfshaft back into front hub. Install steering knuckle onto the ball joint stud (Fig. 20).

HALF SHAFT (Continued)

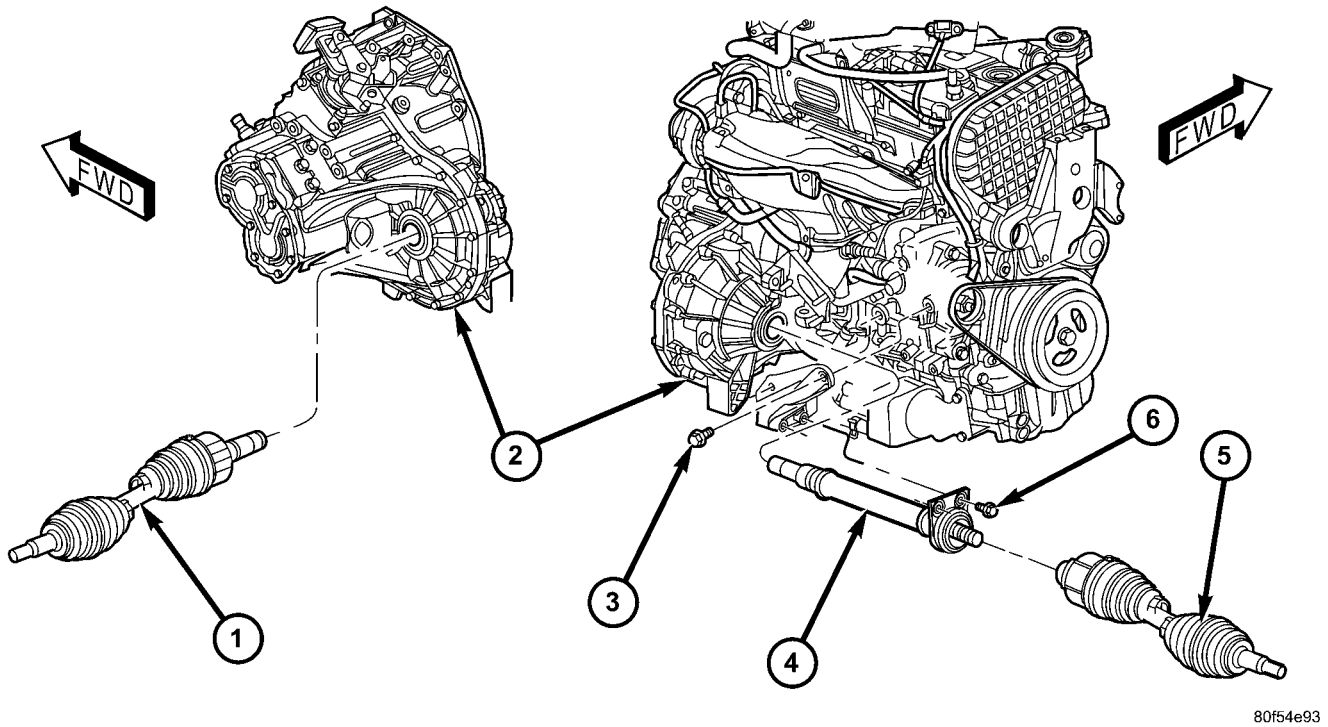

Fig. 17 Halfshaft and Intermediate Shaft—2.4L Turbo Models

1 - HALFSHAFT (LH)
2 - TRANSAXLE
3 - BOLT
4 - INTERMEDIATE SHAFT
5 - HALFSHAFT (RH)
6 - BOLT (2)

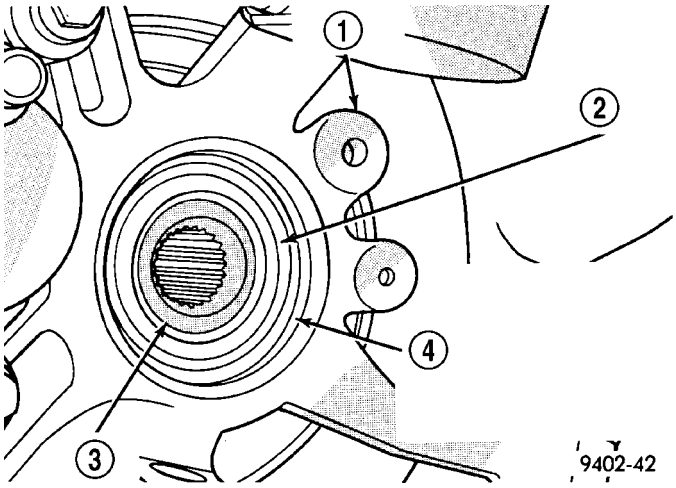

Fig. 18 Steering Knuckle to C/V Joint Sealing Area

1 - STEERING KNUCKLE
2 - WHEEL BEARING
3 - FRONT HUB
4 - THIS AREA OF THE STEERING KNUCKLE IS TO BE FREE OF ALL DEBRIS AND MOISTURE BEFORE INSTALLING HALFSHAFT IN STEERING KNUCKLE

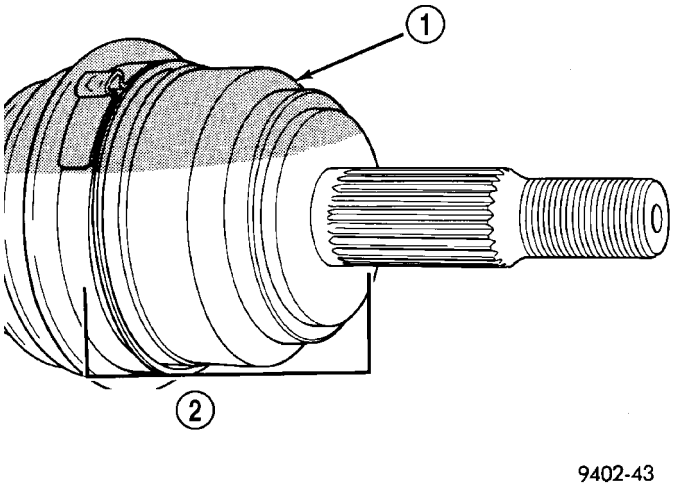

Fig. 19 Outer C/V Joint Inspection

1 - OUTER C/V JOINT
2 - THIS AREA OF OUTER C/V JOINT MUST BE FREE OF ALL DEBRIS AND MOISTURE, BEFORE INSTALLATION INTO STEERING KNUCKLE.

NOTE: At this point, the outer joint will not seat completely into the front hub. The outer joint will be pulled into hub and seated when the hub nut is installed and torqued.

(7) Install a **NEW** steering knuckle to ball joint stud bolt and nut (Fig. 20). Tighten the nut and bolt to 95 N·m (70 ft. lbs.).

HALF SHAFT (Continued)

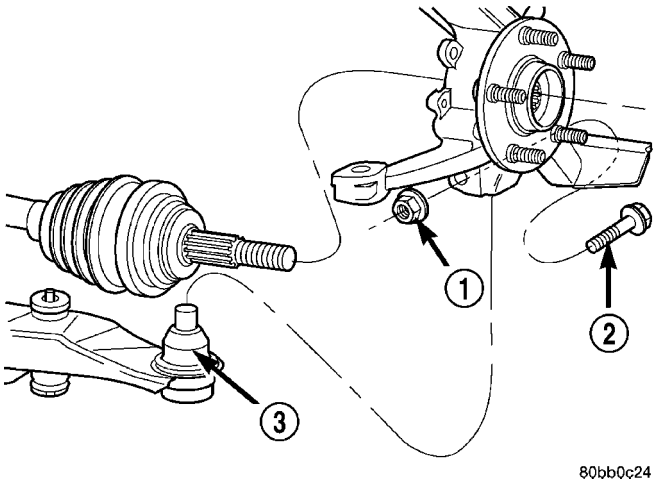

Fig. 20 Halfshaft Installation Into Hub And Knuckle

1 - NUT
2 - BOLT
3 - BALL JOINT

(8) Clean all foreign matter from threads of halfshaft outer stub axle. Install washer and hub nut onto the threads of the stub axle and tighten nut to 244 N·m (180 ft. lbs.) (Fig. 21) .

(9) Install spring washer, nut lock, and cotter pin (Fig. 21).

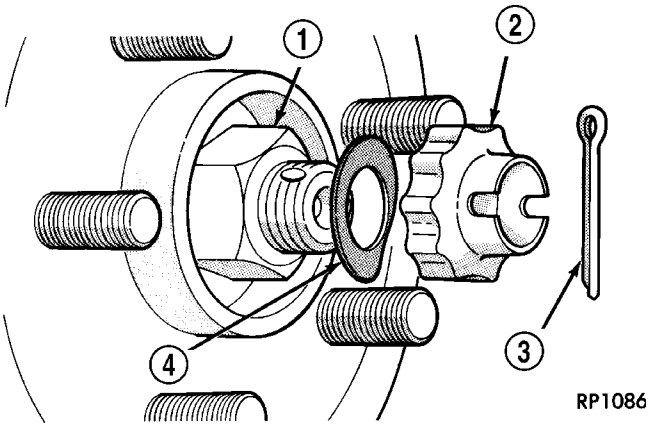

Fig. 21 Halfshaft Retaining Hardware

1 - HUB NUT
2 - NUT LOCK
3 - COTTER PIN
4 - SPRING WASHER

(10) Install front wheel and tire assembly. Install front wheel lug nuts (Fig. 22) and tighten to 128 N·m (100 ft. lbs.).

(11) Check for correct fluid level in transaxle assembly.

(12) Lower vehicle.

(13) Connect battery negative cable.

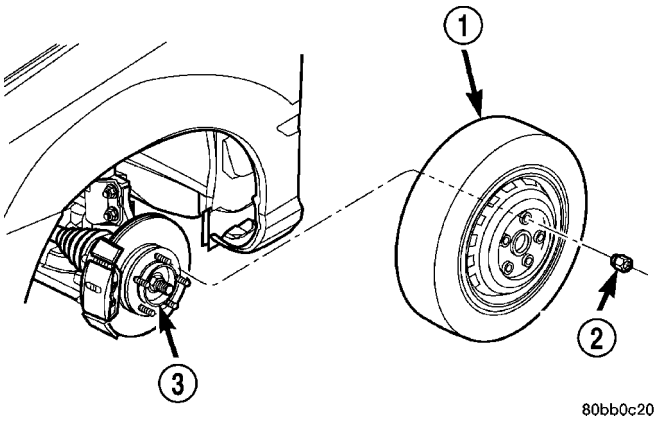

Fig. 22 Wheel and Tire Installation

1 - WHEEL/TIRE ASSY.
2 - LUG NUT (5)
3 - HUB

INSTALLATION—DIESEL AND TURBO MODELS

CAUTION: Boot sealing is vital to retain special lubricants and to prevent foreign contaminants from entering the C/V joint. Mishandling, such as allowing the assemblies to dangle unsupported, or pulling or pushing the ends can cut boots or damage C/V joints. During removal and installation procedures, always support both ends of the halfshaft to prevent damage.

(1) If removed, install intermediate shaft/bearing assembly (Fig. 16) (Fig. 17). Install and torque bearing-to-bracket bolts to 28 N·m (21 ft. lbs.).

(2) Install halfshaft(s). **Left halfshaft:** Thoroughly clean spline and oil seal sealing surface on left tripod joint. Lightly lubricate oil seal sealing surface on tripod joint with fresh clean transmission lubricant. While holding halfshaft assembly by tripod joint and interconnecting shaft, install tripod joint into transaxle as far as possible by hand. Carefully align tripod joint with transaxle side gears. Then grasp halfshaft interconnecting shaft and push tripod joint into transaxle side gear until fully seated. Test that snap ring is fully engaged with side gear by attempting to remove tripod joint from transaxle by hand. If snap ring is fully engaged with side gear, tripod joint will not be removable by hand. **Right halfshaft:** Thoroughly clean right halfshaft tripod joint spline, as well as intermediate shaft spline. While holding halfshaft assembly by tripod joint and interconnecting shaft, install tripod joint onto intermediate shaft as far as possible by hand.

(3) Clean all debris and moisture out of steering knuckle (Fig. 23).

(4) Ensure that front of outer C/V joint, which fits into steering knuckle (Fig. 24), is free of debris and moisture before assembling into steering knuckle.

HALF SHAFT (Continued)

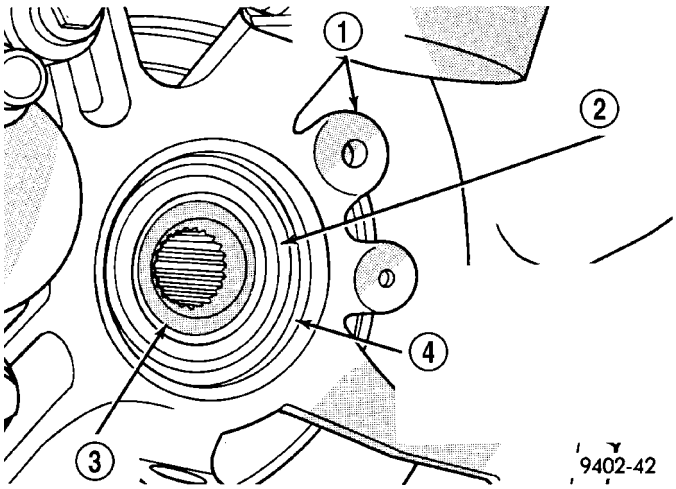

Fig. 23 Steering Knuckle to C/V Joint Sealing Area

1 - STEERING KNUCKLE
2 - WHEEL BEARING
3 - FRONT HUB
4 - THIS AREA OF THE STEERING KNUCKLE IS TO BE FREE OF ALL DEBRIS AND MOISTURE BEFORE INSTALLING HALFSHAFT IN STEERING KNUCKLE

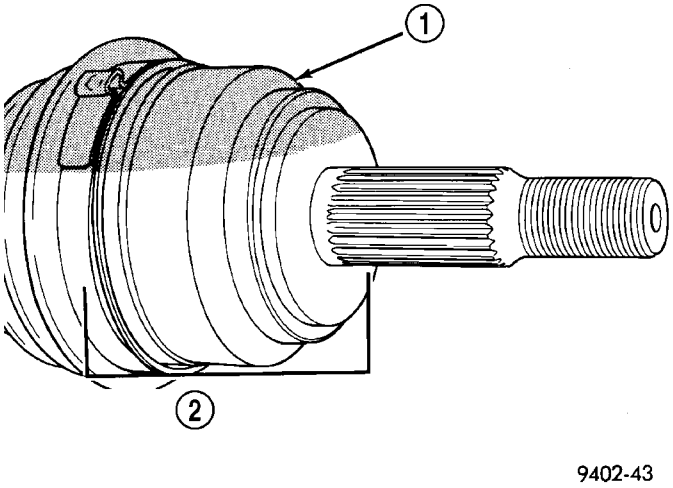

Fig. 24 Outer C/V Joint Inspection

1 - OUTER C/V JOINT
2 - THIS AREA OF OUTER C/V JOINT MUST BE FREE OF ALL DEBRIS AND MOISTURE, BEFORE INSTALLATION INTO STEERING KNUCKLE.

(5) Slide halfshaft back into front hub. Install steering knuckle onto the ball joint stud (Fig. 25).

NOTE: At this point, the outer joint will not seat completely into the front hub. The outer joint will be pulled into hub and seated when the hub nut is installed and torqued.

(6) Install a **NEW** steering knuckle to ball joint stud bolt and nut (Fig. 25). Tighten the nut and bolt to 95 N·m (70 ft. lbs.).

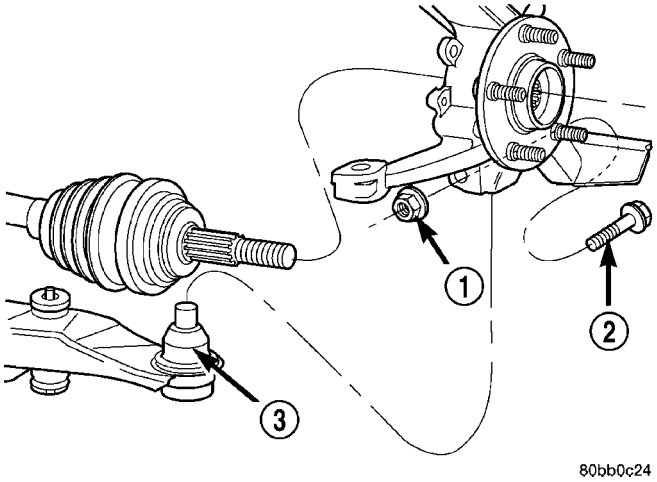

Fig. 25 Halfshaft Installation Into Hub And Knuckle

1 - NUT
2 - BOLT
3 - BALL JOINT

(7) Clean all foreign matter from threads of half-shaft outer stub axle. Install washer and hub nut onto the threads of the stub axle and tighten nut to 244 N·m (180 ft. lbs.) (Fig. 26) .

(8) Install spring washer, nut lock, and cotter pin (Fig. 26).

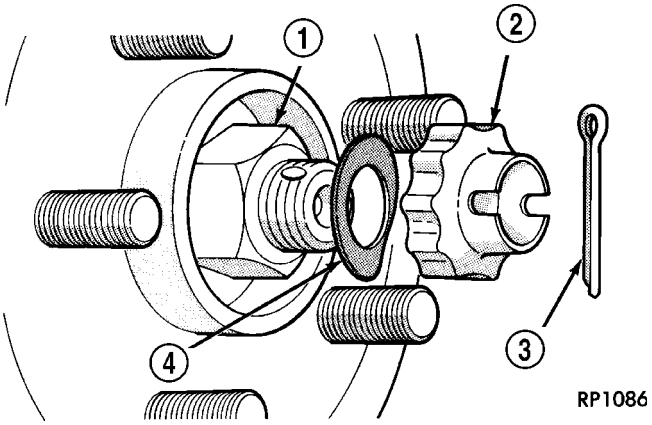

Fig. 26 Halfshaft Retaining Hardware

1 - HUB NUT
2 - NUT LOCK
3 - COTTER PIN
4 - SPRING WASHER

(9) Install front wheel and tire assembly. Install front wheel lug nuts (Fig. 27) and tighten to 128 N·m (100 ft. lbs.).

HALF SHAFT (Continued)

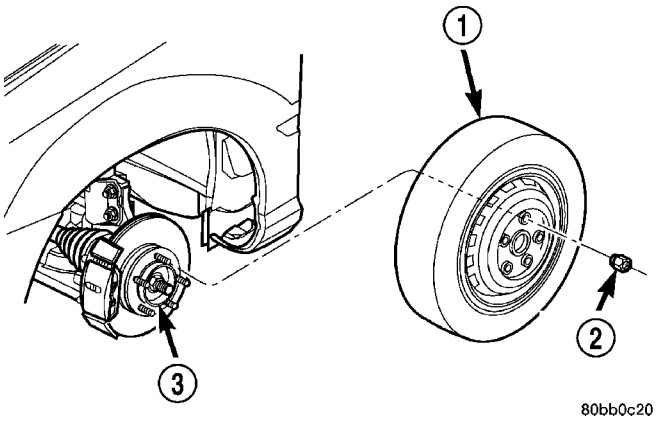

Fig. 27 Wheel and Tire Installation

1 - WHEEL/TIRE ASSY.
2 - LUG NUT (5)
3 - HUB

(10) Check for correct fluid level in transaxle assembly.

(11) Lower vehicle.
(12) Connect battery negative cable.

SPECIFICATIONS - TORQUE

TORQUE SPECIFICATIONS

DESCRIPTION	N·m	Ft. Lbs.	In. Lbs.
Bolt, Intermediate Shaft Bearing-to-Bracket	28	21	—
Nut, Driveshaft-to-Hub/ Bearing	244	180	—
Nut, Knuckle-to-Ball Joint Bolt	95	70	—
Nut, Wheel to Hub	128	95	—

SPECIAL TOOLS

HALFSHAFT

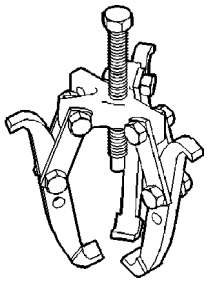

Puller 1026

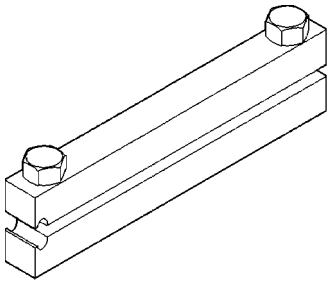

Boot Clamp Installer C-4975A

CV BOOT - INNER

REMOVAL

To remove sealing boot from halfshaft for replacement, the halfshaft assembly must be removed from the vehicle. (Refer to 3 - DIFFERENTIAL & DRIVELINE/HALF SHAFT - REMOVAL)

The inner tripod joints use no internal retention in the tripod housing to keep the spider assembly in the housing. Therefore, do not pull on the interconnecting shaft to disengage tripod housing from transmission stub shaft. Removal in this manner will cause damage to the inboard joint sealing boots.

(1) Remove the halfshaft requiring boot replacement from the vehicle. (Refer to 3 - DIFFERENTIAL & DRIVELINE/HALF SHAFT - REMOVAL)

(2) Remove large boot clamp that retains inner tripod joint sealing boot to tripod joint housing (Fig. 28) and discard. Then remove small clamp that retains inner tripod joint sealing boot to interconnecting shaft and discard. Remove the sealing boot from the tripod housing and slide it down the interconnecting shaft.

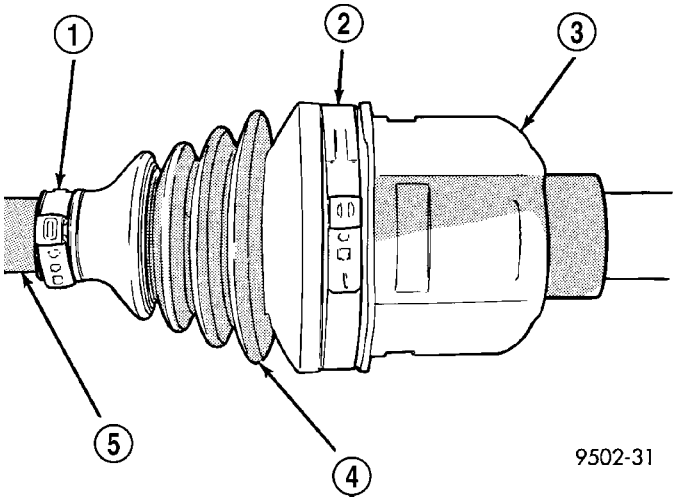

Fig. 28 Inner Tripod Joint Sealing Boot Clamps

1 - SMALL CLAMP
2 - LARGE CLAMP
3 - INNER TRIPOD JOINT
4 - SEALING BOOT
5 - INTERCONNECTING SHAFT

CAUTION: When removing the spider joint from the tripod joint housing, hold the rollers in place on the spider trunions to prevent the rollers and needle bearings from falling away.

(3) Slide the interconnecting shaft and spider assembly out of the tripod joint housing (Fig. 29).

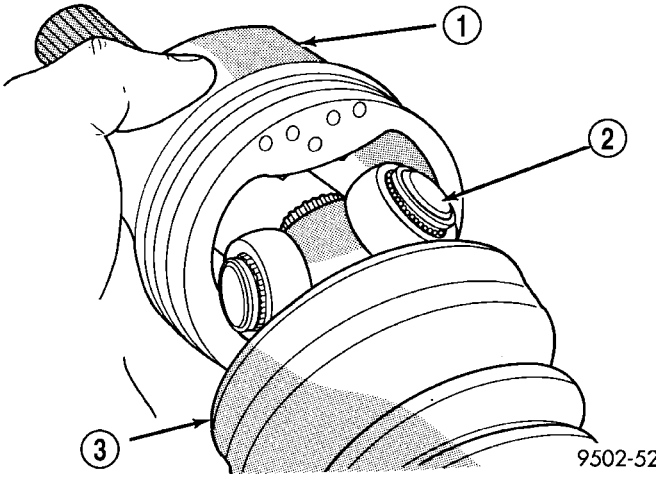

Fig. 29 Spider Assembly Joint Removal from Housing

1 - TRIPOD JOINT HOUSING
2 - SPIDER ASSEMBLY
3 - SEALING BOOT

(4) Remove snap ring that retains spider assembly to interconnecting shaft (Fig. 30). Remove the spider assembly from interconnecting shaft. If spider assembly will not come off interconnecting shaft by hand, it can be removed by tapping spider assembly with a brass drift (Fig. 31). **Do not hit the outer tripod bearings in an attempt to remove spider assembly from interconnecting shaft.**

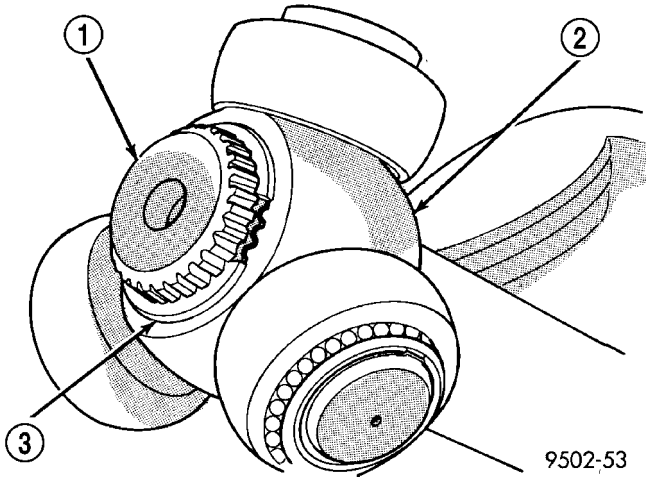

Fig. 30 Spider Assembly Retaining Snap Ring

1 - INTERCONNECTING SHAFT
2 - SPIDER ASSEMBLY
3 - RETAINING SNAP RING

CV BOOT - INNER (Continued)

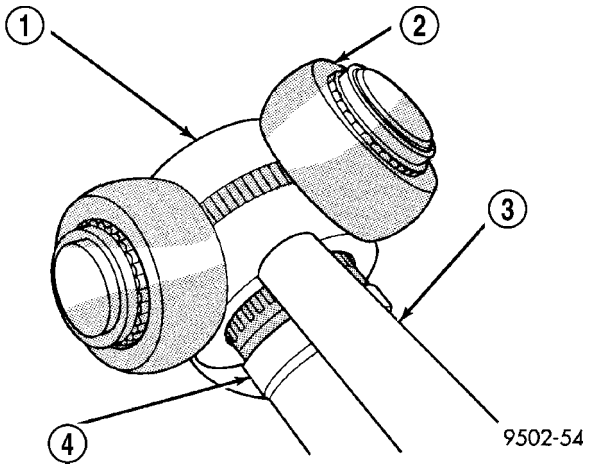

Fig. 31 Spider Assembly Removal from Interconnecting Shaft

1 - SPIDER ASSEMBLY
2 - DO NOT HIT SPIDER ASSEMBLY BEARINGS WHEN REMOVING SPIDER ASSEMBLY
3 - BRASS DRIFT
4 - INTERCONNECTING SHAFT

(5) Slide sealing boot off interconnecting shaft.

(6) Thoroughly clean and inspect spider assembly, tripod joint housing, and interconnecting shaft for any signs of excessive wear. **If any parts show signs of excessive wear, the halfshaft assembly will require replacement. Component parts of these halfshaft assemblies are not serviceable.**

INSTALLATION

NOTE: The inner tripod joint sealing boots are made from two different types of material. High–temperature applications use silicone rubber whereas standard temperature applications use Hytrel plastic. The silicone sealing boots are soft and pliable. The Hytrel sealing boots are stiff and rigid. The replacement sealing boot MUST BE the same type of material as the sealing boot that was removed.

(1) Slide inner tripod joint seal boot retaining clamp, onto interconnecting shaft. Then slide the replacement inner tripod joint sealing boot onto interconnecting shaft. **Inner tripod joint seal boot MUST be positioned on interconnecting shaft, so the raised bead on the inside of the seal boot is in groove on interconnecting shaft (Fig. 32).**

(2) Install spider assembly onto interconnecting shaft with chamfer on spider assembly toward interconnecting shaft (Fig. 33). Spider assembly must be installed on interconnecting shaft far enough to fully install spider retaining snap ring. If spider assembly will not fully install on interconnecting shaft by hand, it can be installed by tapping the spider body

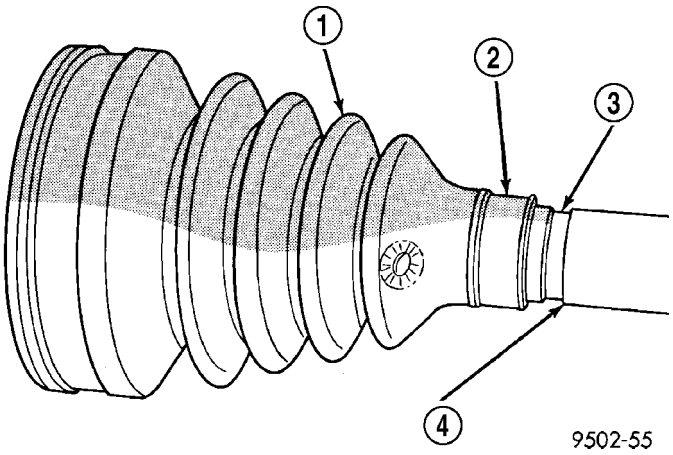

Fig. 32 Sealing Boot Installation on Interconnecting Shaft

1 - SEALING BOOT
2 - RAISED BEAD IN THIS AREA OF SEALING BOOT
3 - GROOVE
4 - INTERCONNECTING SHAFT

with a brass drift (Fig. 34). **Do not hit the outer tripod bearings in an attempt to install spider assembly on interconnecting shaft.**

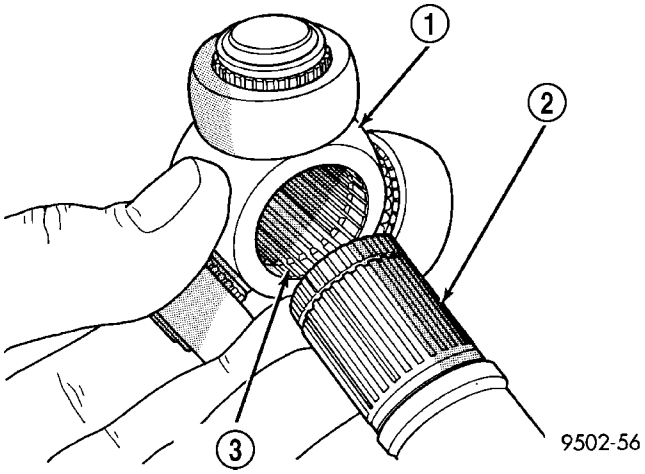

Fig. 33 Spider Assembly Installation on Interconnecting Shaft

1 - SPIDER ASSEMBLY
2 - INTERCONNECTING SHAFT
3 - CHAMFER

(3) Install the spider assembly to interconnecting shaft retaining snap ring into groove on end of interconnecting shaft (Fig. 35). Be sure the snap ring is fully seated into groove on interconnecting shaft.

(4) Distribute 1/2 the amount of grease provided in the seal boot service package (DO NOT USE ANY OTHER TYPE OF GREASE) into tripod housing. Put the remaining amount into the sealing boot.

(5) Align tripod housing with spider assembly and then slide tripod housing over spider assembly and interconnecting shaft (Fig. 36).

CV BOOT - INNER (Continued)

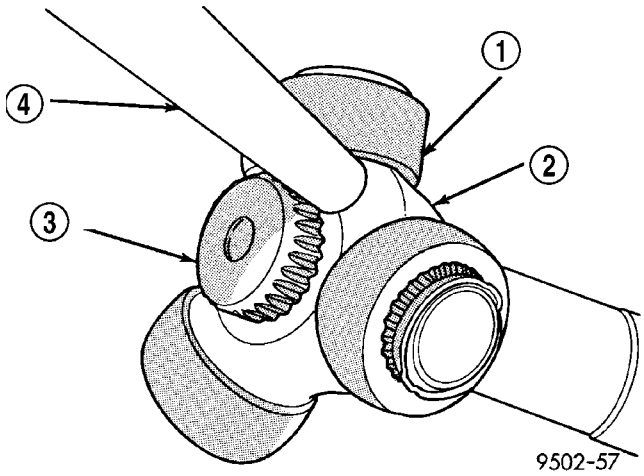

Fig. 34 Installing Spider Assembly On Interconnecting Shaft

1 - DO NOT HIT BEARINGS WHEN INSTALLING THE SPIDER ASSEMBLY
2 - SPIDER ASSEMBLY
3 - INTERCONNECTING SHAFT
4 - BRASS DRIFT

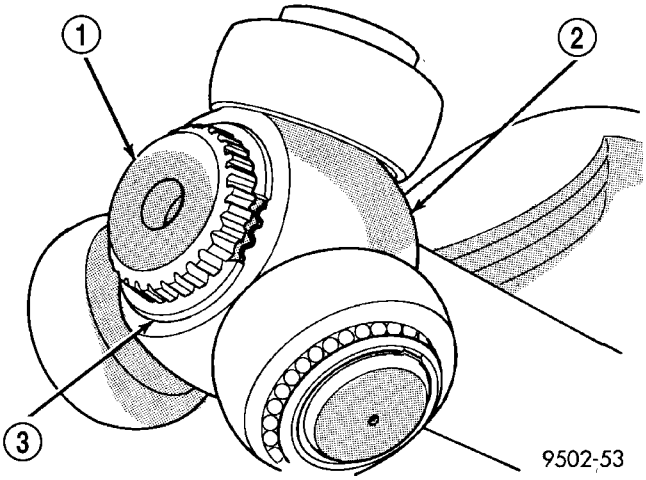

Fig. 35 Spider Assembly Retaining Snap Ring Installed

1 - INTERCONNECTING SHAFT
2 - SPIDER ASSEMBLY
3 - RETAINING SNAP RING

(6) Install inner tripod joint seal boot to interconnecting shaft clamp evenly on sealing boot.

(7) Clamp sealing boot onto interconnecting shaft using crimper, Special Tool C-4975-A and the following procedure. Place crimping tool C-4975-A over bridge of clamp (Fig. 37). Tighten nut on crimping tool C-4975-A until jaws on tool are closed completely together, face to face (Fig. 38).

CAUTION: Seal must not be dimpled, stretched, or out–of–shape in any way. If seal is NOT shaped correctly, equalize pressure in seal and shape it by hand.

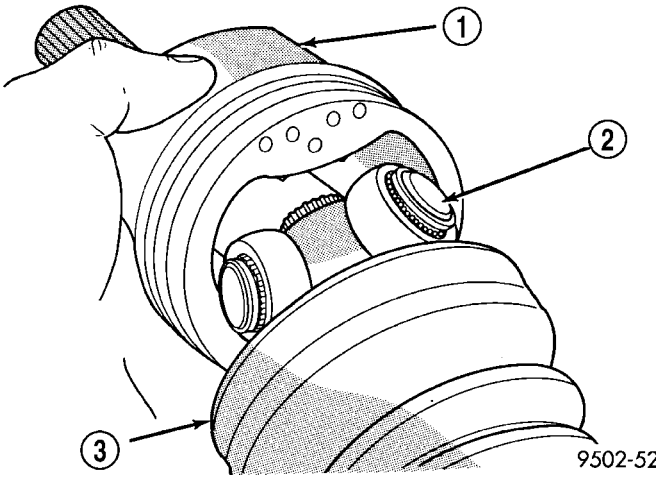

Fig. 36 Installing Tripod Housing on Spider Assembly

1 - TRIPOD JOINT HOUSING
2 - SPIDER ASSEMBLY
3 - SEALING BOOT

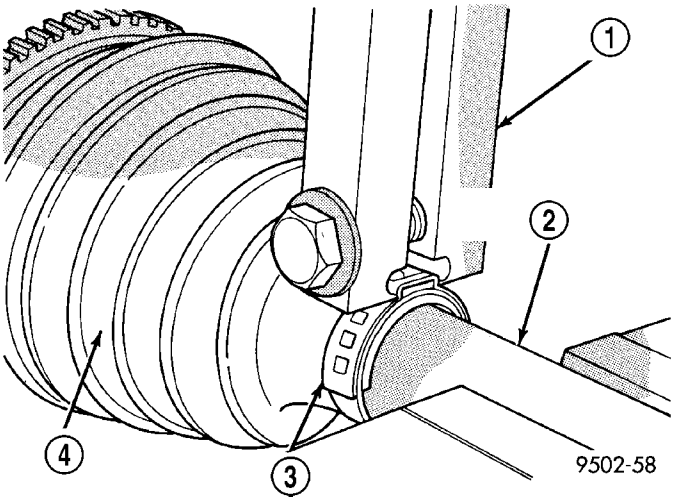

Fig. 37 Crimping Tool Installed on Sealing Boot Clamp

1 - SPECIAL TOOL C-4975A
2 - INTERCONNECTING SHAFT
3 - CLAMP
4 - SEALING BOOT

(8) Position sealing boot into the tripod housing retaining groove. Install seal boot retaining clamp evenly on sealing boot.

CAUTION: The following positioning procedure determines the correct air pressure inside the inner tripod joint assembly prior to clamping the sealing boot to inner tripod joint housing. If this procedure is not done prior to clamping sealing boot to tripod joint housing, boot durability can be adversely affected.

CV BOOT - INNER (Continued)

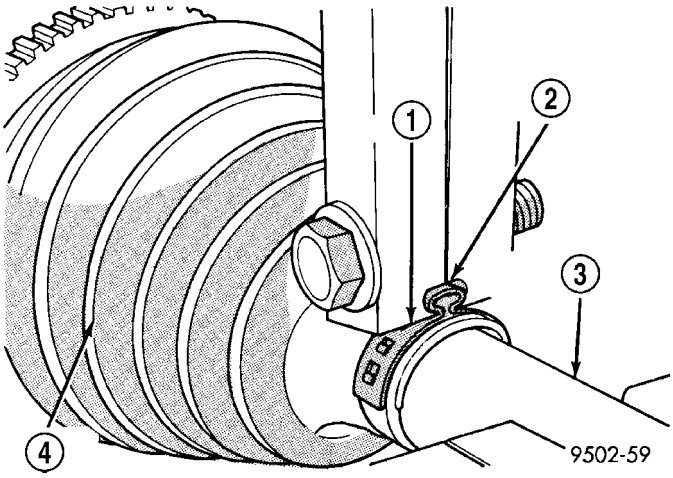

Fig. 38 Sealing Boot Retaining Clamp Installed

1 - CLAMP
2 - JAWS OF SPECIAL TOOL C-4975A MUST BE CLOSED COMPLETELY TOGETHER HERE
3 - INTERCONNECTING SHAFT
4 - SEALING BOOT

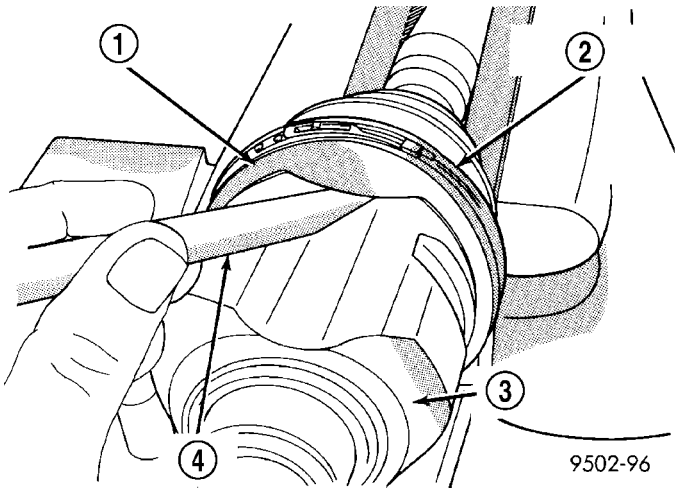

Fig. 39 Trim Stick Inserted for Venting Tripod Joint

1 - INNER TRIPOD JOINT SEALING BOOT
2 - SEALING BOOT CLAMP
3 - INNER TRIPOD JOINT HOUSING
4 - TRIM STICK

CAUTION: When venting the inner tripod joint assembly, use care so inner tripod sealing boot does not get punctured or, in any other way, damaged. If sealing boot is punctured or damaged while being vented, the sealing boot can not be used.

(9) Insert a trim stick between the tripod joint and the sealing boot to vent inner tripod joint assembly (Fig. 39). **When inserting trim stick between tripod housing and sealing boot, ensure trim stick is held flat and firmly against the tripod housing. If this is not done, damage to the sealing boot can occur.** If inner tripod joint has a Hytrel (hard plastic) sealing boot, be sure trim stick is inserted between soft rubber insert and tripod housing, and not the hard plastic sealing boot and soft rubber insert.

(10) With trim stick inserted between sealing boot and tripod joint housing, position inner tripod joint on halfshaft until correct sealing boot edge to edge length is obtained for type of sealing boot material being used (Fig. 40) (Fig. 41). Then remove the trim stick.

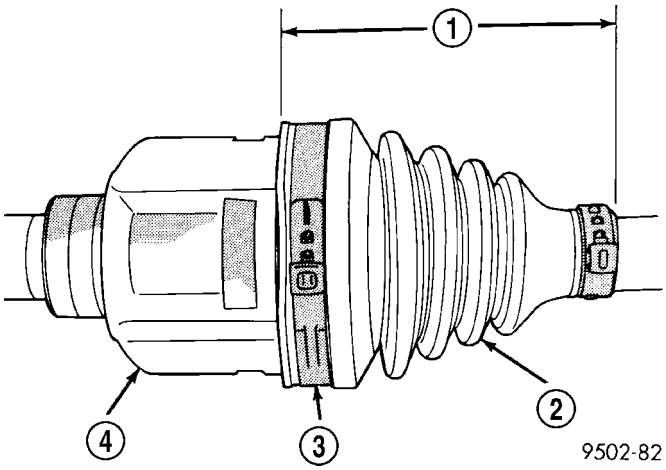

Fig. 40 Sealing Boot End to End Length with Hytrel Boot

1 - 107 MILLIMETERS
2 - HYTREL SEALING BOOT
3 - SEALING BOOT CLAMP
4 - INNER TRIPOD JOINT

CV BOOT - INNER (Continued)

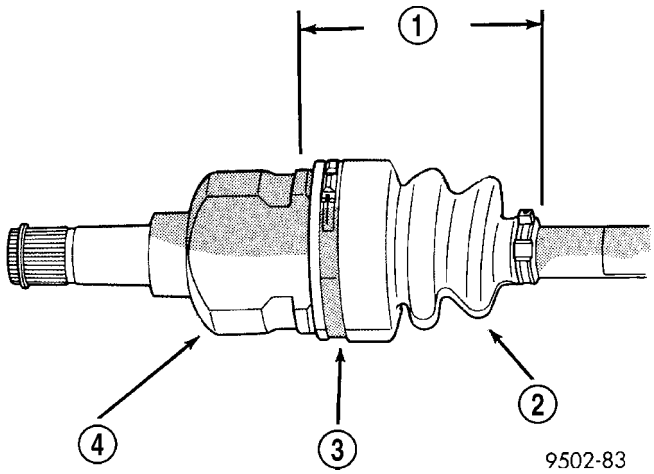

Fig. 41 Sealing Boot End to End Length with Silicone Boot

1 - 105 MILLIMETERS
2 - SILICONE SEALING BOOT
3 - CLAMP
4 - INNER TRIPOD JOINT

(11) Clamp tripod joint sealing boot to tripod joint using required procedure for type of boot clamp application. If seal boot uses crimp type boot clamp, clamp sealing boot onto tripod housing using crimper, Special Tool C-4975-A. Place crimping tool C-4975-A over bridge of clamp (Fig. 42). Tighten nut on crimping tool C-4975-A until jaws on tool are closed completely together, face–to–face (Fig. 43).

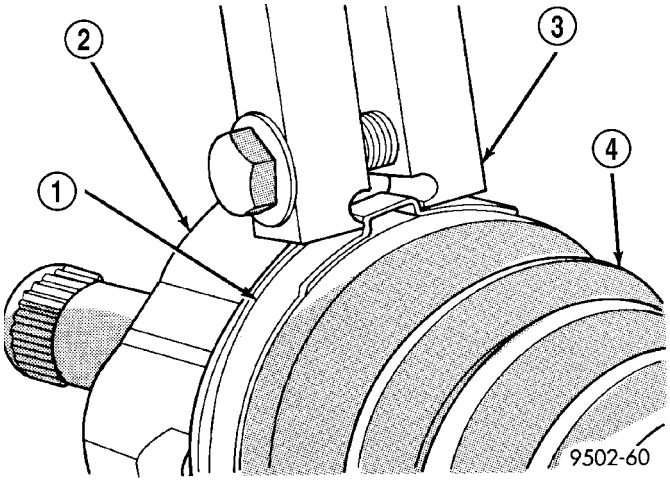

Fig. 42 Crimping Tool Installed on Sealing Boot Clamp

1 - CLAMP
2 - TRIPOD JOINT HOUSING
3 - SPECIAL TOOL C-4975A
4 - SEALING BOOT

(12) If seal boot uses low profile latching type boot clamp, clamp sealing boot onto tripod housing using clamp locking tool, Snap-On® YA3050 (or an equivalent). Place prongs of clamp locking tool in the holes

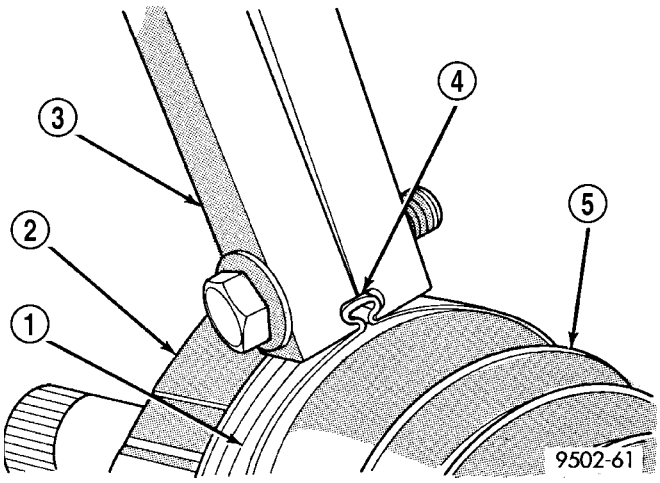

Fig. 43 Sealing Boot Retaining Clamp Installed

1 - CLAMP
2 - TRIPOD HOUSING
3 - SPECIAL TOOL C-4975A
4 - JAWS OF SPECIAL TOOL C-4975A MUST BE CLOSED COMPLETELY TOGETHER HERE
5 - SEALING BOOT

of the clamp (Fig. 44). Squeeze tool together until top band of clamp is latched behind the two tabs on lower band of clamp (Fig. 45).

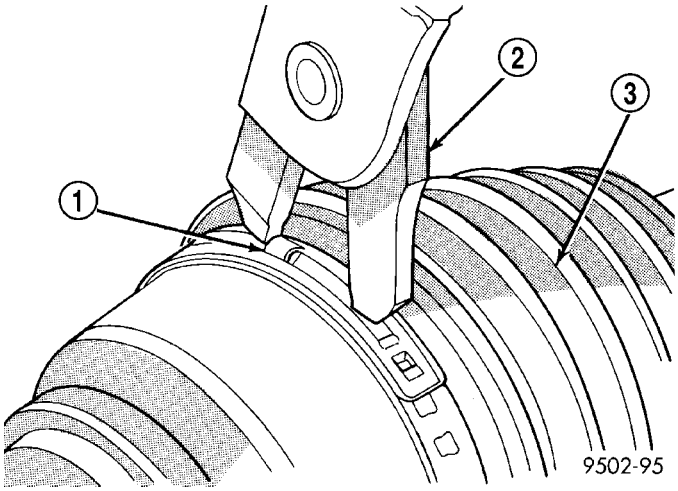

Fig. 44 Clamping Tool Installed on Sealing Boot Clamp

1 - CLAMP
2 - SPECIAL TOOL YA3050
3 - SEALING BOOT

(13) Install the halfshaft requiring boot replacement back on the vehicle. (Refer to 3 - DIFFERENTIAL & DRIVELINE/HALF SHAFT - INSTALLATION)

CV BOOT - INNER (Continued)

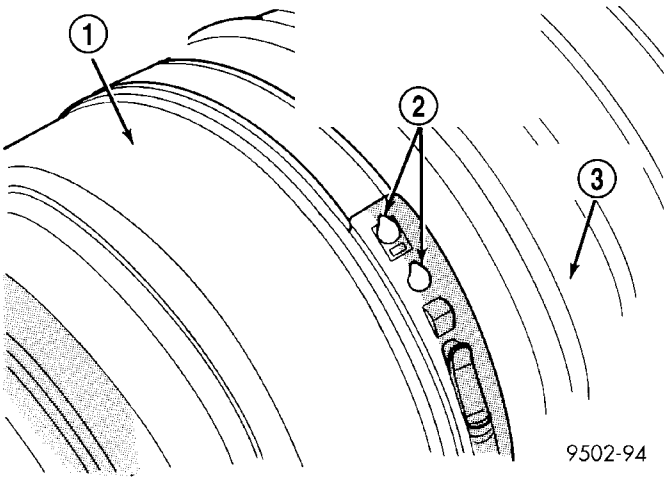

Fig. 45 Sealing Boot Clamp Correctly Installed

1 - INNER TRIPOD JOINT HOUSING
2 - TOP BAND OF CLAMP MUST BE RETAINED BY TABS AS SHOWN HERE TO CORRECTLY LATCH BOOT CLAMP
3 - SEALING BOOT

CV BOOT - OUTER

REMOVAL

(1) Remove halfshaft assembly requiring boot replacement from vehicle. (Refer to 3 - DIFFERENTIAL & DRIVELINE/HALF SHAFT - REMOVAL)

(2) Remove large boot clamp retaining C/V joint sealing boot to C/V joint housing (Fig. 46) and discard. Remove small clamp that retains outer C/V joint sealing boot to interconnecting shaft and discard. Remove sealing boot from outer C/V joint housing and slide it down interconnecting shaft.

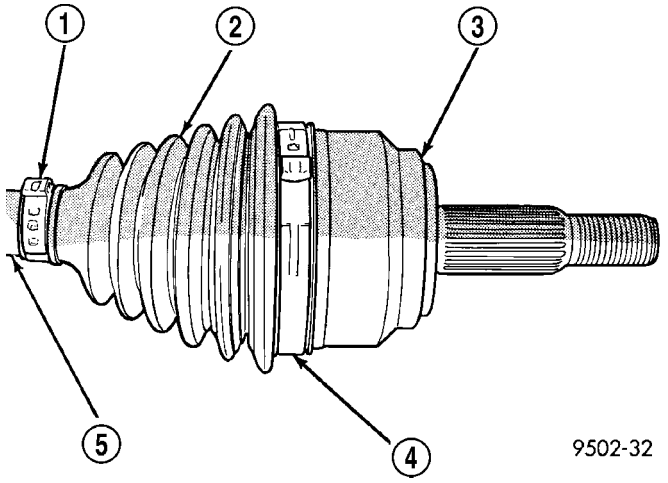

Fig. 46 Outer C/V Joint Seal Boot Clamps

1 - SMALL CLAMP
2 - SEALING BOOT
3 - OUTER C/V JOINT HOUSING
4 - LARGE CLAMP
5 - INTERCONNECTING SHAFT

(3) Wipe away grease to expose outer C/V joint and interconnecting shaft.

(4) Remove outer C/V joint from interconnecting shaft using the following procedure: Support interconnecting shaft in a vise equipped with protective caps on jaws of vise to prevent damage to interconnecting shaft. Then, using a soft–faced hammer, sharply hit the end of the C/V joint housing to dislodge housing from internal circlip on interconnecting shaft (Fig. 47). Then slide outer C/V joint off end of interconnecting shaft, joint may have to be tapped off shaft using a **soft–faced** hammer.

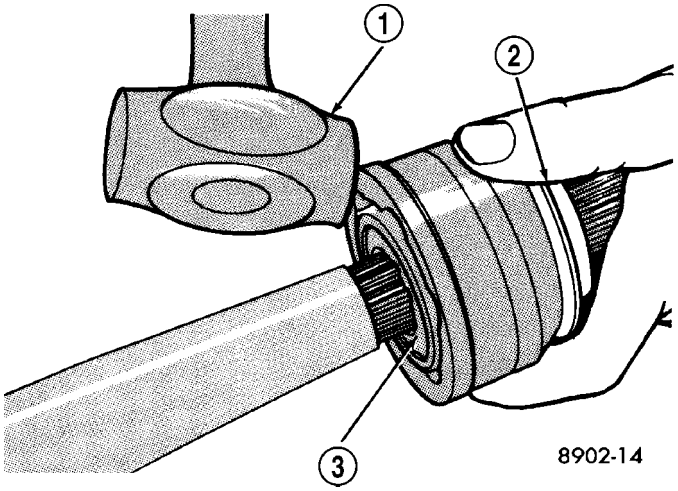

Fig. 47 Outer C/V Joint Removal from Interconnecting Shaft

1 - SOFT HAMMER (TAP INNER RACE ONLY)
2 - WEAR SLEEVE
3 - CIRCLIP (OUTER END OF SHAFT)

(5) Remove large circlip (Fig. 48) from the interconnecting shaft before attempting to remove outer C/V joint sealing boot.

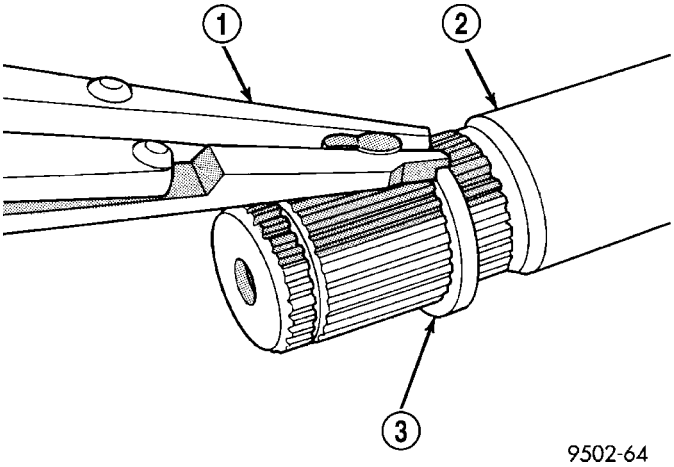

Fig. 48 Circlip Removal from Interconnecting Shaft

1 - SNAP RING PLIERS
2 - INTERCONNECTING SHAFT
3 - CIRCLIP

CV BOOT - OUTER (Continued)

(6) Slide sealing boot off interconnecting shaft.

(7) Thoroughly clean and inspect outer C/V joint assembly and interconnecting joint for any signs of excessive wear. **If any parts show signs of excessive wear, the halfshaft assembly will require replacement. Component parts of these halfshaft assemblies are not serviceable.**

INSTALLATION

(1) Slide new sealing boot to interconnecting shaft retaining clamp onto interconnecting shaft. Slide the outer C/V joint assembly sealing boot onto the interconnecting shaft (Fig. 49). **Seal boot MUST be positioned on interconnecting shaft so the raised bead on the inside of the seal boot is in groove on interconnecting shaft.**

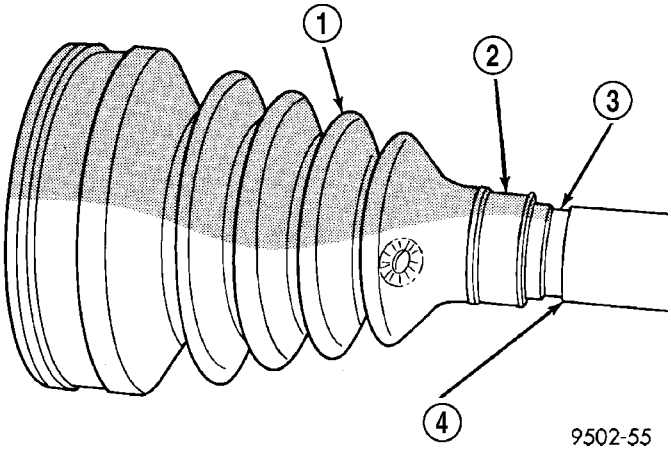

Fig. 49 Sealing Boot Installation on Interconnecting Shaft

1 - SEALING BOOT
2 - RAISED BEAD IN THIS AREA OF SEALING BOOT
3 - GROOVE
4 - INTERCONNECTING SHAFT

(2) Align splines on interconnecting shaft with splines on cross of outer C/V joint assembly and start outer C/V joint onto interconnecting shaft.

(3) Install outer C/V joint assembly onto interconnecting shaft by using a **soft–faced** hammer and tapping end of stub axle (with hub nut installed) until outer C/V joint is fully seated on interconnecting shaft (Fig. 50).

(4) Outer C/V joint assembly must be installed on interconnecting shaft until cross of outer C/V joint assembly is seated against circlip on interconnecting shaft (Fig. 51).

(5) Distribute 1/2 the amount of grease provided in seal boot service package (DO NOT USE ANY OTHER TYPE OF GREASE) into outer C/V joint assembly housing. Put the remaining amount into the sealing boot.

(6) Install outer C/V joint sealing boot to interconnecting shaft clamp evenly on sealing boot.

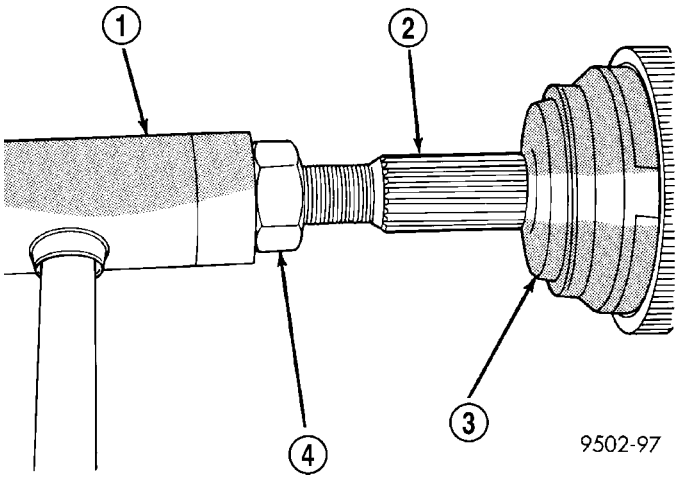

Fig. 50 Outer C/V Joint Installation on Interconnecting

1 - SOFT FACED HAMMER
2 - STUB AXLE
3 - OUTER C/V JOINT
4 - HUB NUT

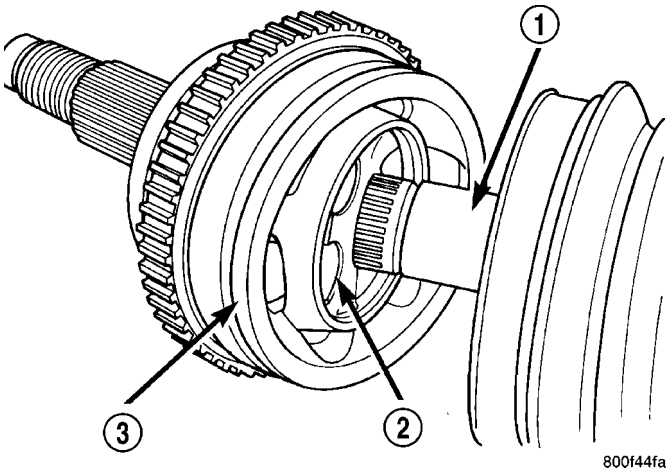

Fig. 51 Outer C/V Joint Correctly Installed on Interconnecting Shaft

1 - INTERCONNECTING SHAFT
2 - CROSS
3 - OUTER C/V JOINT ASSEMBLY

(7) Clamp sealing boot onto interconnecting shaft using crimper, Special Tool C-4975-A and the following procedure. Place crimping tool C-4975-A over bridge of clamp (Fig. 52). Tighten nut on crimping tool C-4975-A until jaws on tool are closed completely together, face to face (Fig. 53).

CAUTION: Seal must not be dimpled, stretched, or out–of–shape in any way. If seal is NOT shaped correctly, equalize pressure in seal and shape it by hand.

(8) Position outer C/V joint sealing boot into its retaining groove on outer C/V joint housing. Install

CV BOOT - OUTER (Continued)

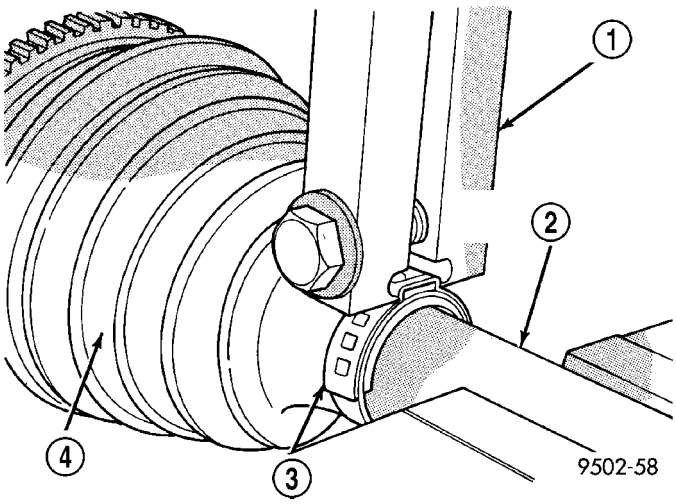

Fig. 52 Crimping Tool Installed on Sealing Boot Clamp

1 - SPECIAL TOOL C-4975A
2 - INTERCONNECTING SHAFT
3 - CLAMP
4 - SEALING BOOT

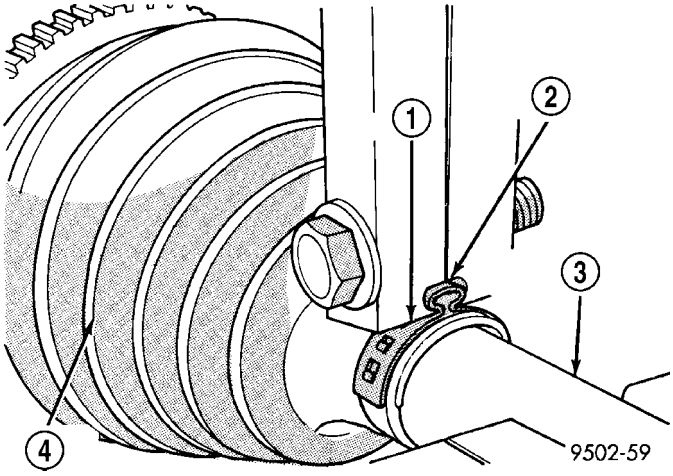

Fig. 53 Sealing Boot Retaining Clamp Installed

1 - CLAMP
2 - JAWS OF SPECIAL TOOL C-4975A MUST BE CLOSED COMPLETELY TOGETHER HERE
3 - INTERCONNECTING SHAFT
4 - SEALING BOOT

sealing boot to outer C/V joint retaining clamp evenly on sealing boot.

(9) Clamp sealing boot onto outer C/V joint housing using Crimper, Special Tool C-4975-A and the following procedure. Place crimping tool C-4975-A over bridge of clamp (Fig. 54). Tighten nut on crimping tool C-4975-A until jaws on tool are closed completely together, face to face (Fig. 55).

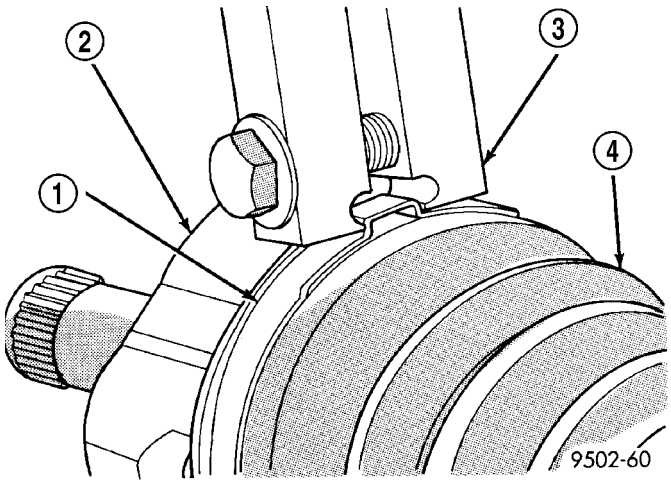

Fig. 54 Crimping Tool Installed on Sealing Boot Clamp

1 - CLAMP
2 - TRIPOD JOINT HOUSING
3 - SPECIAL TOOL C-4975A
4 - SEALING BOOT

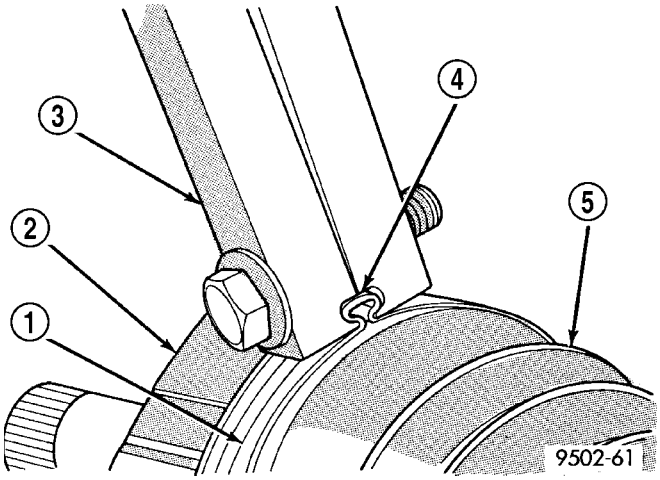

Fig. 55 Sealing Boot Retaining Clamp Installed

1 - CLAMP
2 - TRIPOD HOUSING
3 - SPECIAL TOOL C-4975A
4 - JAWS OF SPECIAL TOOL C-4975A MUST BE CLOSED COMPLETELY TOGETHER HERE
5 - SEALING BOOT

(10) Install the halfshaft requiring boot replacement back on the vehicle. (Refer to 3 - DIFFERENTIAL & DRIVELINE/HALF SHAFT - INSTALLATION)

BRAKES

TABLE OF CONTENTS

page

BRAKES - BASE 1

BRAKES - ABS 73

BRAKES - BASE

TABLE OF CONTENTS

page

BRAKES - BASE
DESCRIPTION - BASE BRAKE SYSTEM 2
OPERATION - BASE BRAKE SYSTEM 3
WARNING 3
CAUTION
CAUTIONS 3
DIAGNOSIS AND TESTING - BASE BRAKE SYSTEM DIAGNOSIS CHARTS 3
STANDARD PROCEDURE - BASE BRAKE BLEEDING 6
SPECIFICATIONS
BRAKE ACTUATION SYSTEM 8
BRAKE FASTENER TORQUE 8
SPECIAL TOOLS
BASE BRAKE SYSTEM 9
BRAKE FLUID LEVEL SWITCH
REMOVAL 10
INSTALLATION 10
HYDRAULIC/MECHANICAL
DESCRIPTION
DESCRIPTION - DISC BRAKES (FRONT) . . . 10
DESCRIPTION - DISC BRAKES (REAR) 13
DESCRIPTION - DRUM BRAKES (REAR) . . . 13
DIAGNOSIS AND TESTING - DRUM BRAKE AUTOMATIC ADJUSTER 14
BRAKE LINES
DESCRIPTION - BRAKE TUBES AND HOSES . 15
OPERATION - BRAKE TUBES AND HOSES . . . 15
INSPECTION - BRAKE TUBES AND HOSES . . . 15
BRAKE PADS/SHOES - FRONT
REMOVAL 15
CLEANING - DISC BRAKE SHOES 16
INSPECTION - DISC BRAKE SHOES 16
INSTALLATION 16
BRAKE PADS/SHOES - REAR DISC
REMOVAL 17
CLEANING - DISC BRAKE SHOES 18
INSPECTION - DISC BRAKE SHOES 19
INSTALLATION 19
BRAKE PADS/SHOES - REAR DRUM
REMOVAL 19
CLEANING - DRUM BRAKE SHOES 21
INSPECTION - DRUM BRAKE SHOES 21
INSTALLATION 22
ADJUSTMENTS
ADJUSTMENT - DRUM BRAKE SHOES 23
DISC BRAKE CALIPER - FRONT
REMOVAL 24
DISASSEMBLY 24
CLEANING - DISC BRAKE CALIPER 25
INSPECTION - DISC BRAKE CALIPER 25
ASSEMBLY 25
INSTALLATION 26
DISC BRAKE CALIPER - REAR
REMOVAL 27
DISASSEMBLY
DISASSEMBLY - DISC BRAKE CALIPER (GUIDE PIN BUSHINGS) 28
DISASSEMBLY - DISC BRAKE CALIPER (PISTON AND SEAL) 28
CLEANING - DISC BRAKE CALIPER 30
INSPECTION - DISC BRAKE CALIPER 30
ASSEMBLY
ASSEMBLY - DISC BRAKE CALIPER (GUIDE PIN BUSHINGS) 30
ASSEMBLY - DISC BRAKE CALIPER (PISTON AND SEAL) 32
INSTALLATION 33
DISC BRAKE CALIPER ADAPTER - FRONT
REMOVAL 33
INSTALLATION 34
DISC BRAKE CALIPER GUIDE PINS
REMOVAL 34
INSTALLATION 35

DRUM
DIAGNOSIS AND TESTING - BRAKE DRUM . . . 35
STANDARD PROCEDURE - BRAKE DRUM MACHINING . . . 35
REMOVAL . . . 36
INSTALLATION . . . 36
FLUID
DIAGNOSIS AND TESTING - BRAKE FLUID CONTAMINATION . . . 37
STANDARD PROCEDURE - BRAKE FLUID LEVEL CHECKING . . . 37
SPECIFICATIONS
BRAKE FLUID . . . 37
FLUID RESERVOIR
REMOVAL . . . 37
INSTALLATION . . . 38
MASTER CYLINDER
DESCRIPTION . . . 38
OPERATION . . . 38
STANDARD PROCEDURE - MASTER CYLINDER BLEEDING . . . 38
REMOVAL
REMOVAL - LHD WITH ABS . . . 39
REMOVAL - LHD WITHOUT ABS . . . 40
REMOVAL - RHD . . . 41
INSTALLATION
INSTALLATION - LHD WITH ABS . . . 41
INSTALLATION - LHD WITHOUT ABS . . . 41
INSTALLATION - RHD . . . 42
PEDAL - WITH AUTOMATIC TRANSAXLE
REMOVAL . . . 42
INSTALLATION . . . 43
PEDAL - WITH MANUAL TRANSAXLE
REMOVAL . . . 44
INSTALLATION . . . 44
POWER BRAKE BOOSTER
DESCRIPTION . . . 45
OPERATION . . . 46
DIAGNOSIS AND TESTING - POWER BRAKE BOOSTER . . . 46
REMOVAL
REMOVAL - LHD . . . 47
REMOVAL - RHD . . . 48
INSTALLATION
INSTALLATION - LHD . . . 48
INSTALLATION - RHD . . . 49
PROPORTIONING VALVE
DESCRIPTION . . . 49
OPERATION . . . 50
DIAGNOSIS AND TESTING - PROPORTIONING VALVE . . . 50
REMOVAL . . . 52
INSTALLATION . . . 52
ROTOR
DESCRIPTION . . . 52
DIAGNOSIS AND TESTING - BRAKE ROTOR . . 52
STANDARD PROCEDURE - BRAKE ROTOR MACHINING . . . 55
REMOVAL
REMOVAL - FRONT BRAKE ROTOR . . . 56
REMOVAL - REAR BRAKE ROTOR . . . 56
INSTALLATION
INSTALLATION - FRONT BRAKE ROTOR . . . 57
INSTALLATION - REAR BRAKE ROTOR . . . 57
SPECIFICATIONS
BRAKE ROTOR LIMITS/SPECIFICATIONS . . . 57
SUPPORT PLATE - DRUM BRAKES
REMOVAL . . . 58
INSTALLATION . . . 59
WHEEL CYLINDER - DRUM BRAKE
REMOVAL . . . 60
INSPECTION . . . 61
INSTALLATION . . . 61
PARKING BRAKE
DESCRIPTION . . . 61
OPERATION . . . 62
STANDARD PROCEDURE - PARKING BRAKE AUTOMATIC ADJUSTER LOCKOUT . . . 62
CABLE - PARKING BRAKE
REMOVAL . . . 63
INSTALLATION . . . 67
LEVER - PARKING BRAKE
REMOVAL . . . 68
INSTALLATION . . . 69
SHOES - PARKING BRAKE
REMOVAL . . . 69
INSTALLATION . . . 70
ADJUSTMENTS
ADJUSTMENT . . . 71

BRAKES - BASE

DESCRIPTION - BASE BRAKE SYSTEM

The base brake system consists of the following components:

- Brake pedal
- Brake lamp switch
- Power brake booster
- Master cylinder
- Proportioning valves (2) (on non-ABS vehicles only)
- Brake tubes and hoses
- Disc brakes (front)
- Disc brakes (rear) (optional)
- Drum brakes (rear)
- Parking brake

The hydraulic brake system is diagonally split on both the non-antilock and antilock braking systems. This means the left front and right rear brakes are

BRAKES - BASE (Continued)

on one hydraulic circuit and the right front and left rear are on the other.

Front disc brakes control the braking of the front wheels; rear braking is controlled by rear drum brakes as standard equipment. Rear disc brakes and antilock brakes with or without traction control are optional.

Vehicles equipped with the optional antilock brake system (ABS) use a system designated Mark 20e. This system shares most base brake hardware used on vehicles without ABS. For more information on ABS (Refer to 5 - BRAKES - ABS - DESCRIPTION).

The parking brake system consists of a hand-operated lever mounted between the front seats, two parking brake cables and parking brake shoes at each rear wheel. Only vehicles with rear disc brakes receive separate parking brake shoes. Vehicles with rear drum brakes utilize the service brakes as the parking brake shoes.

OPERATION - BASE BRAKE SYSTEM

When a vehicle needs to be stopped, the driver applies the brake pedal. The brake pedal pushes the input rod of the power brake booster into the booster. The booster uses vacuum to ease pedal effort as force is transferred through the booster to the master cylinder. The booster's output rod pushes in the master cylinder's primary and secondary pistons applying hydraulic pressure through the proportioning valves (non-ABS - rear only) and chassis brake tubes to the brakes at each tire and wheel assembly.

The parking brakes are hand-operated. When applied, the parking brake lever pulls on cables that actuate brake shoes at each rear wheel. The parking brake lever has an automatic-adjusting feature that takes up any excessive slack in the parking brake cable system.

WARNING

WARNING: DUST AND DIRT ACCUMULATING ON BRAKE PARTS DURING NORMAL USE MAY CONTAIN ASBESTOS FIBERS FROM PRODUCTION OR AFTERMARKET BRAKE LININGS. BREATHING EXCESSIVE CONCENTRATIONS OF ASBESTOS FIBERS CAN CAUSE SERIOUS BODILY HARM. EXERCISE CARE WHEN SERVICING BRAKE PARTS. DO NOT SAND OR GRIND BRAKE LINING UNLESS EQUIPMENT USED IS DESIGNED TO CONTAIN THE DUST RESIDUE. DO NOT CLEAN BRAKE PARTS WITH COMPRESSED AIR OR BY DRY BRUSHING. CLEANING SHOULD BE DONE BY DAMPENING THE BRAKE COMPONENTS WITH A FINE MIST OF WATER, THEN WIPING THE BRAKE COMPONENTS CLEAN WITH A DAMPENED CLOTH. DISPOSE OF CLOTH AND ALL RESIDUE CONTAINING ASBESTOS FIBERS IN AN IMPERMEABLE CONTAINER WITH THE APPROPRIATE LABEL. FOLLOW PRACTICES PRESCRIBED BY THE OCCUPATIONAL SAFETY AND HEALTH ADMINISTRATION (OSHA) AND THE ENVIRONMENTAL PROTECTION AGENCY (EPA) FOR THE HANDLING, PROCESSING, AND DISPOSING OF DUST OR DEBRIS THAT MAY CONTAIN ASBESTOS FIBERS.

CAUTION

CAUTIONS

CAUTION: Use only Mopar® brake fluid or an equivalent from a tightly sealed container. Brake fluid must conform to DOT 3 specifications. Do not use petroleum-based fluid because seal damage in the brake system will result.

CAUTION: Brake fluid will damage painted surfaces. If brake fluid is spilled on any painted surfaces, wash it off immediately with water.

CAUTION: Never use gasoline, kerosene, alcohol, motor oil, transmission fluid, or any fluid containing mineral oil to clean system components. These fluids damage rubber cups and seals.

CAUTION: During service procedures, grease or any other foreign material must be kept off the caliper assembly, brake linings, brake rotor and external surfaces of the hub.

CAUTION: When handling the brake rotor and caliper, be careful to avoid damaging the brake rotor and caliper, and scratching or nicking the brake shoe lining.

DIAGNOSIS AND TESTING - BASE BRAKE SYSTEM DIAGNOSIS CHARTS

NOTE: There are three diagnosis charts following that cover the RED BRAKE WARNING INDICATOR, BRAKE NOISE and OTHER BRAKE CONDITIONS.

BRAKES - BASE (Continued)

RED BRAKE WARNING INDICATOR

CONDITION	POSSIBLE CAUSES	CORRECTION
RED BRAKE WARNING INDICATOR ON	1. Parking brake lever not fully released.	1. Release parking brake lever.
	2. Parking brake warning switch on parking brake lever.	2. Inspect and replace switch as necessary.
	3. Brake fluid level low in reservoir.	3. Fill reservoir. Check entire system for leaks. Repair or replace as required.
	4. Brake fluid level switch.	4. Disconnect switch wiring connector. If lamp goes out, replace switch.
	5. Mechanical instrument cluster (MIC) problem.	5. Refer to Appropriate Diagnostic Information.
	6. ABS EVBP malfunction.	6. Refer to ABS section and Appropriate Diagnostic Information.

BRAKE NOISE

CONDITION	POSSIBLE CAUSES	CORRECTION
DISC BRAKE CHIRP	1. Excessive brake rotor runout.	1. Refer to brake rotor - diagnosis and testing. Correct as necessary.
DISC BRAKE RATTLE OR CLUNK	1. Broken or missing spring clips.	1. Replace brake shoes.
	2. Caliper guide pin bolts loose.	2. Tighten guide pin bolts.
	3. Missing abutment shims.	3. Replace missing abutment shims.
DISC BRAKE SQUEAK AT LOW SPEED (WHILE APPLYING LIGHT BRAKE PEDAL EFFORT)	1. Brake shoe linings.	1. Replace brake shoes.
DRUM BRAKE CHIRP	1. Lack of lubricant on brake shoe support plate where shoes ride.	1. Lubricate shoe contact areas on brake shoe support plates.
	2. Wheel cylinder out of alignment.	2. Loosen wheel cylinder mounting bolts, realign wheel cylinder with brake shoes and tighten mounting bolts.
DRUM BRAKE CLUNK	1. Drum(s) have threaded machined braking surface.	1. Reface or replace drake drums as necessary.
DRUM BRAKE HOWL OR MOAN	1. Lack of lubricant on brake shoe support plate where shoes ride and at the anchor.	1. Lubricate shoe contact areas on brake shoe support plates and at the anchor.
	2. Rear brake shoes.	2. Replace rear brake shoes.
SCRAPING (METAL-TO-METAL).	1. Foreign object interference with brakes.	1. Inspect brakes and remove foreign object.
	2. Brake shoes worn out.	2. Replace brake shoes. Inspect rotors and drums. Reface or replace as necessary.
SCRAPING OR WHIRRING	1. ABS wheel speed sensor hitting tone wheel.	1. Inspect, correct or replace faulty component(s).

BRAKES - BASE (Continued)

OTHER BRAKE CONDITIONS

CONDITION	POSSIBLE CAUSES	CORRECTION
BRAKES CHATTER	1. Rear brake drum out of round or disc brake rotor has excessive thickness variation.	1. Isolate condition as rear or front. Reface or replace brake drums or rotors as necessary.
BRAKES DRAG (FRONT OR ALL)	1. Contaminated brake fluid.	1. Check for swollen seals. Replace all system components containing rubber.
	2. Binding caliper pins or bushings.	2. Replace pins and bushings
	3. Misadjusted brake lamp switch.	3. Replace brake lamp switch. (Refer to 8 - ELECTRICAL/LAMPS/LIGHTING - EXTERIOR/BRAKE LAMP SWITCH - REMOVAL)
	4. Master cylinder not fully returning.	4. Inspect master cylinder and replace as necessary.
	5. Binding brake pedal.	5. Replace brake pedal/bushings.
BRAKES DRAG (REAR ONLY)	1. Parking brake cables binding or froze up.	1. Check cable routing. Replace cables as necessary.
	2. Parking brake cable return spring not returning shoes.	2. Replace cables as necessary.
	3. Service brakes not adjusted properly (rear drum brakes only).	3. Adjust rear brake shoes. Refer to Brake Pads/Shoes - Drum Brake.
	4. Obstruction inside the center console preventing full return of the parking brake cables.	4. Remove console and remove obstruction.
BRAKES GRAB	1. Contaminated brake shoe linings.	1. Inspect and clean, or replace shoes. Repair source of contamination.
	2. Improper power brake booster assist.	2. Refer to Power Brake Booster in this section.
EXCESSIVE PEDAL EFFORT	1. Obstruction of brake pedal.	1. Inspect, remove or move obstruction.
	2. Low power brake booster assist.	2. Refer to Power Brake Booster in this section.
	3. Glazed brake linings.	3. Reface or replace brake rotors as necessary. Replace brake shoes.
	4. Brake shoe lining transfer to brake rotor.	4. Reface or replace brake rotors as necessary. Replace brake shoes.
EXCESSIVE PEDAL EFFORT (HARD PEDAL - CAN'T SKID WHEELS)	1. Power brake booster runout (vacuum assist).	1. Check booster vacuum hose and engine tune for adequate vacuum supply. Refer to Power Brake Booster.
EXCESSIVE PEDAL TRAVEL (VEHICLE STOPS OK)	1. Air in brake lines.	1. Bleed brakes.
	2. Rear drum brake auto-adjuster malfunctioning.	2. Inspect and replace drum brake components as necessary. Adjust rear brakes.

BRAKES - BASE (Continued)

CONDITION	POSSIBLE CAUSES	CORRECTION
EXCESSIVE PEDAL TRAVEL (ONE FRONT WHEEL LOCKS UP DURING HARD BRAKING)	1. One of the two hydraulic circuits is malfunctioning.	1. Inspect system for leaks. Check master cylinder for internal malfunction.
PEDAL PULSATES/ SURGES DURING BRAKING	1. Rear brake drum out of round or disc brake rotor has excessive thickness variation.	1. Isolate condition as rear or front. Reface or replace brake drums or rotors as necessary.
PEDAL IS SPONGY	1. Air in brake lines.	1. Bleed brakes.
PREMATURE REAR WHEEL LOCKUP	1. Contaminated brake shoe linings.	1. Inspect and clean, or replace shoes. Repair source of contamination.
	2. Inoperative proportioning valve (non-ABS vehicles only).	2. Test proportioning valves following diagnosis and testing procedure. Refer to Proportioning Valve. Replace valves as necessary.
	3. ABS EVBP not functioning.	3. Refer to the ABS section and Appropriate Diagnostic Information.
STOP LAMPS STAY ON	1. Brake lamp switch out of adjustment.	1. Replace brake lamp switch. (Refer to 8 - ELECTRICAL/LAMPS/LIGHTING - EXTERIOR/BRAKE LAMP SWITCH - REMOVAL)
	2. Brake pedal binding.	2. Inspect and replace as necessary.
	3. Power brake booster not allowing pedal to return completely.	3. Replace power brake booster.
VEHICLE PULLS TO RIGHT OR LEFT ON BRAKING	1. Frozen brake caliper piston.	1. Replace frozen piston or caliper. Bleed brakes.
	2. Contaminated brake shoe lining (most likely front lining).	2. Inspect and clean, or replace shoes. Repair source of contamination.
	3. Pinched brake lines.	3. Replace pinched line.
	4. Leaking piston seal.	4. Replace piston seal or brake caliper.
	5. Suspension problem.	5. Refer to the Suspension section.
PARKING BRAKE - EXCESSIVE HANDLE TRAVEL	1. Rear brakes out of adjustment.	1. Adjust rear drum brake shoes, or rear parking brake shoes on vehicles with rear disc brakes.

STANDARD PROCEDURE - BASE BRAKE BLEEDING

NOTE: For bleeding the ABS hydraulic system, refer to Antilock Brake System Bleeding in the Antilock Brake System section.

CAUTION: Before removing the master cylinder cap, wipe it clean to prevent dirt and other foreign matter from dropping into the master cylinder reservoir.

CAUTION: Use only Mopar® brake fluid or an equivalent from a fresh, tightly sealed container. Brake fluid must conform to DOT 3 specifications.

Do not pump the brake pedal at any time while having a bleeder screw open during the bleeding process. This will only increase the amount of air in the system and make additional bleeding necessary.

BRAKES - BASE (Continued)

Do not allow the master cylinder reservoir to run out of brake fluid while bleeding the system. An empty reservoir will allow additional air into the brake system. Check the fluid level frequently and add fluid as needed.

The following wheel circuit sequence for bleeding the brake hydraulic system should be used to ensure adequate removal of all trapped air from the hydraulic system.

- Left rear wheel
- Right front wheel
- Right rear wheel
- Left front wheel

MANUAL BLEEDING

NOTE: To bleed the brakes manually, the aid of a helper will be required.

(1) Attach a clear plastic hose to the bleeder screw and feed the hose into a clear jar containing enough fresh brake fluid to submerge the end of the hose (Fig. 1).

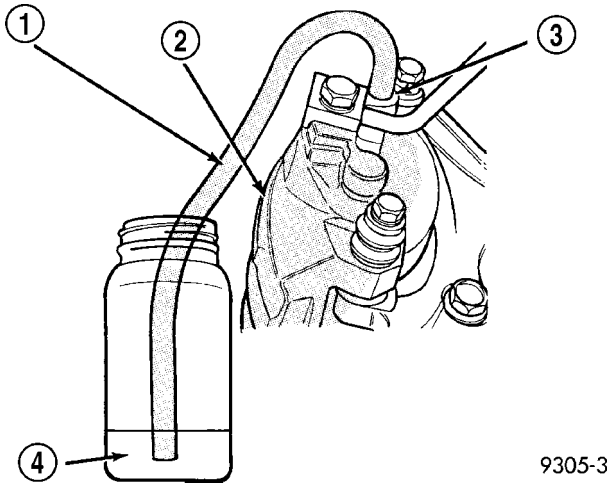

Fig. 1 Proper Method for Purging Air From Brake System (Typical)

1 - CLEAR HOSE
2 - BRAKE CALIPER
3 - BLEEDER SCREW
4 - CLEAN BRAKE FLUID

(2) Have a helper pump the brake pedal three or four times and hold it in the down position.

(3) With the pedal in the down position, open the bleeder screw at least 1 full turn.

(4) Once the brake pedal has dropped, close the bleeder screw. After the bleeder screw is closed, release the brake pedal.

(5) Repeat the above steps until all trapped air is removed from that wheel circuit (usually four or five times).

(6) Bleed the remaining wheel circuits in the same manner until all air is removed from the brake system. Monitor the fluid level in the master cylinder reservoir to make sure it does not go dry.

(7) Check the brake pedal travel. If pedal travel is excessive or has not been improved, some air may still be trapped in the system. Rebleed the brakes as necessary.

(8) Test drive the vehicle to verify the brakes are operating properly and pedal feel is correct.

PRESSURE BLEEDING

NOTE: Follow pressure bleeder manufacturer's instructions for use of pressure bleeding equipment.

Following the same wheel circuit sequence as prescribed for manual bleeding.

(1) Attach Adapter, Special Tool 6921, to the master cylinder reservoir (Fig. 2).

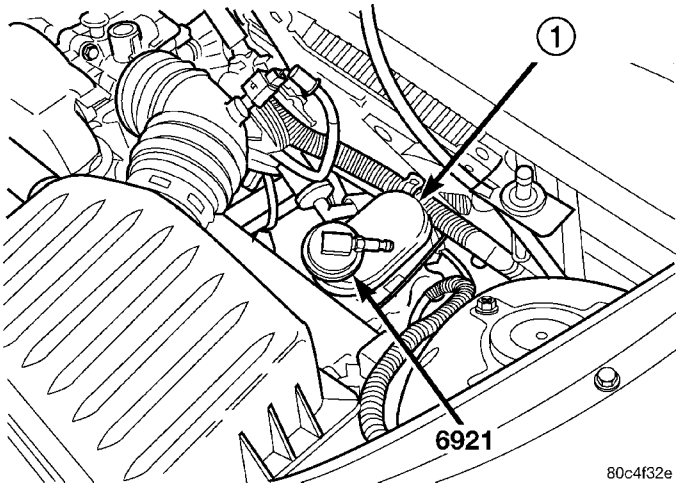

Fig. 2 Special Tool 6921

1 - MASTER CYLINDER FLUID RESERVOIR

(2) Attach Bleeder Tank, Special Tool C-3496-B, or an equivalent, to the adapter on the master cylinder.

(3) Attach a clear plastic hose to the bleeder screw and feed the hose into a clear jar containing enough fresh brake fluid to submerge the end of the hose (Fig. 1).

(4) Open the bleeder screw at least one full turn or more to obtain a steady stream of brake fluid.

(5) After approximately 4–8 ounces of fluid have been bled through the brake circuit and an air-free flow is maintained in the clear plastic hose and jar, close the bleeder screw.

(6) Repeat this procedure at all the remaining bleeder screws.

BRAKES - BASE (Continued)

(7) Check the brake pedal travel. If pedal travel is excessive or has not been improved, some air may still be trapped in the system. Rebleed the brakes as necessary.

(8) Test drive the vehicle to verify the brakes are operating properly and pedal feel is correct.

SPECIFICATIONS

BRAKE ACTUATION SYSTEM

ACTUATION:	
Vacuum Operated Power Brakes	Standard
Hydraulic System	Dual-Diagonally Split
BRAKE PEDAL:	
Pedal Ratio	3.75
POWER BRAKE BOOSTER:	
Make/Type	Bosch/Vacuum
Mounting Studs	M8 x 1.25
Diaphragm Size/Type	205 mm / Tandem
MASTER CYLINDER ASSEMBLY:	
Type	Compact Series
Body Material	Anodized Aluminum
Reservoir Material	Polypropelene
MASTER CYLINDER BORE, STROKE AND SPLIT:	
All	23.82 mm x 34.0 mm (0.937 in. x 1.34 in.)
Displacement Split	50 / 50
MASTER CYLINDER FLUID OUTLET PORTS:	
Tube Fitting Type	SAE 45° Inverted Flare
W/ABS - Primary Tube Nut Thread	7/16 in.–24
W/ABS - Secondary Tube Nut Thread	3/8 in.–24
W/O ABS - All Tube Nut Threads	7/16 in.–24
ABS HYDRAULIC CONTROL UNIT:	
Hydraulic Tube Fitting Type	SAE 45° Inverted Flare
Inlet Port Threads (Both)	7/16 in.–24
Outlet Port Threads- Left Front and Left Rear	3/8 in.–24
ACTUATION:	
Outlet Port Threads- Right Front and Right Rear	7/16 in.–24
PROPORTIONING VALVE (non-ABS vehicles):	
Material	Aluminum
Function	Fixed Pressure Proportioning

BRAKE FASTENER TORQUE

DESCRIPTION	N·m	Ft. Lbs.	In. Lbs.
ABS ICU Mounting Bolts (To Bracket)	11	—	97
ABS ICU Mounting Bracket Bolts (To Frame)	23	17	200
ABS CAB Mounting Screws (To HCU)	2	—	17
ABS Wheel Speed Sensor Mounting Screw	12	—	105
Brake Hose Banjo Bolt (To Caliper)	24	18	210
Brake Tube Nuts	17	—	145
Disc Brake Caliper Adapter (To Knuckle) - Front	104	77	—
Disc Brake Caliper Adapter (To Knuckle) - Rear	95	70	—
Disc Brake Caliper Guide Pin Bolts - Front	35	26	—
Disc Brake Caliper Guide Pin Bolts - Rear	22	16	192
Disc Brake Caliper Bleeder Screw	13	—	115
Drum Brake Shoe Support Plate Mounting Bolts	95	70	—
Drum Brake Wheel Cylinder Mounting Bolts	13	—	115
Drum Brake Wheel Cylinder Bleeder Screw	10	—	89
Master Cylinder Mounting Nuts	18	—	160
Parking Brake Lever Mounting Nut And Screw	28	21	250
Power Brake Booster Mounting Nuts	34	25	300
Wheel Mounting (Lug) Nuts	135	100	—

BRAKES - BASE (Continued)

SPECIAL TOOLS

BASE BRAKE SYSTEM

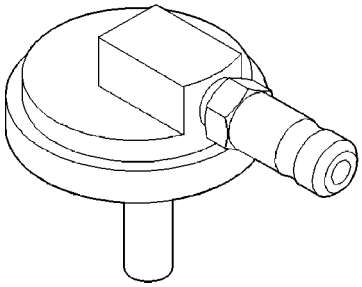

Cap Adapter, Brake Pressure Bleeder 6921

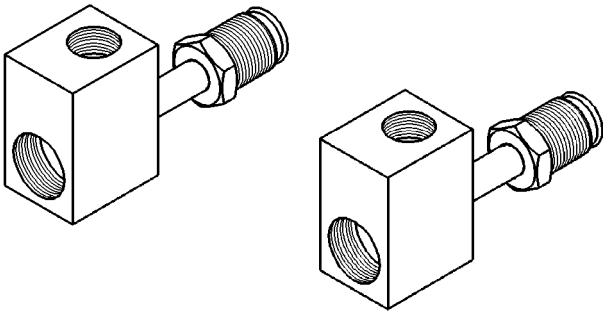

Adapters, Brake Pressure 8187

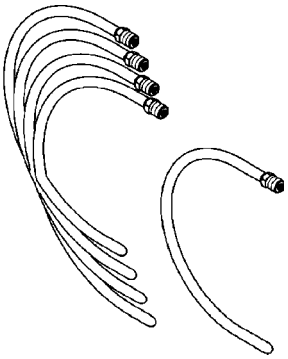

Tubes, Master Cylinder Bleed 8358

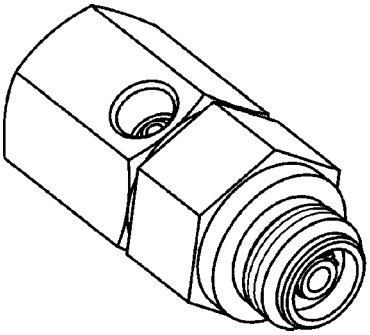

Adapter, Brake Pressure 8644

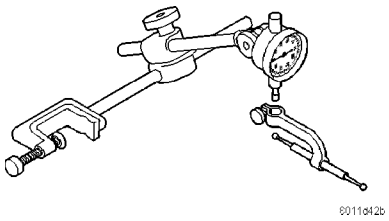

Dial Indicator C-3339

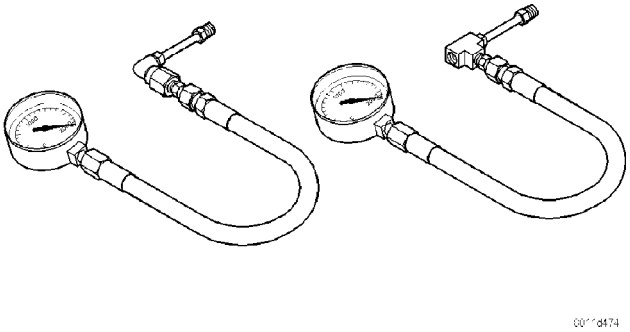

Gauge Set C-4007-A

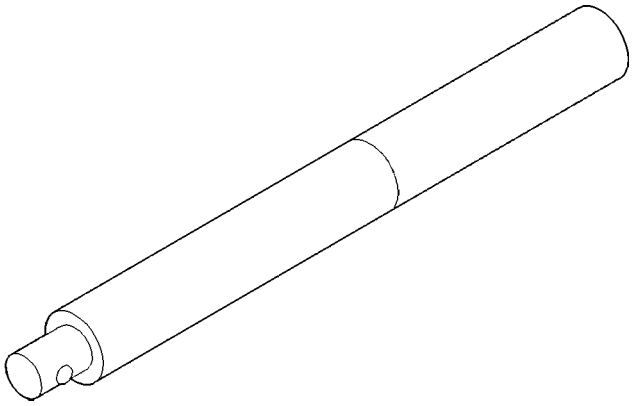

Handle, Universal C-4171

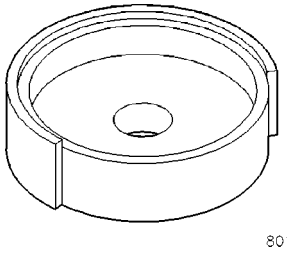

Installer, Dust Boot C-4689

BRAKE FLUID LEVEL SWITCH

REMOVAL

NOTE: Before proceeding, (Refer to 5 - BRAKES - WARNING)(Refer to 5 - BRAKES - CAUTION).

(1) Remove the vehicle wiring harness connector from brake fluid level switch in master cylinder brake fluid reservoir (Fig. 3).

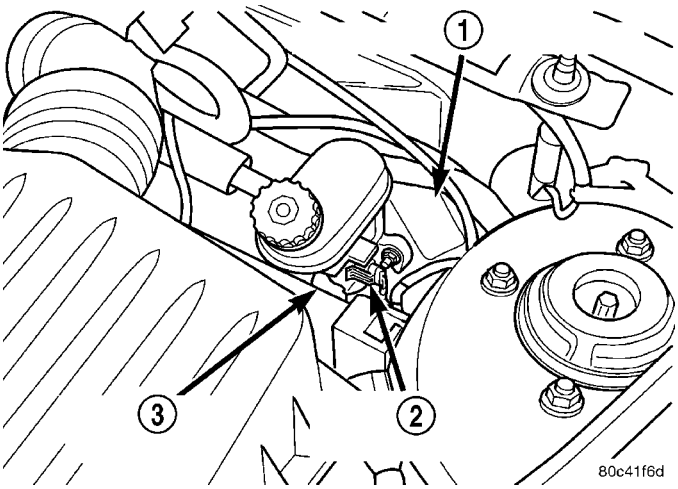

Fig. 3 Master Cylinder

1 - POWER BRAKE BOOSTER
2 - BRAKE FLUID LEVEL SWITCH
3 - MASTER CYLINDER

(2) Push together the retaining tabs holding the brake fluid level switch in place in the brake fluid reservoir (Fig. 4).

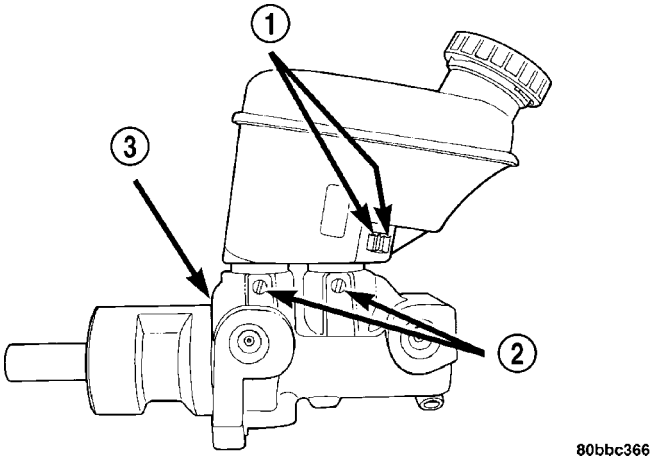

Fig. 4 Master Cylinder Reservoir

1 - BRAKE FLUID LEVEL SWITCH RETAINING TABS
2 - RESERVOIR RETAINING PINS
3 - SEAL

(3) Pull the brake fluid level switch out the other side of the reservoir.

INSTALLATION

(1) Align the brake fluid level switch with its mounting hole on the left side of the master cylinder brake fluid reservoir. Push the switch into the fluid reservoir until the switch retaining tabs are expanded on the other side of the reservoir, locking it in place (Fig. 4).

(2) Connect the brake fluid level switch wiring connector (Fig. 3).

HYDRAULIC/MECHANICAL

DESCRIPTION

DESCRIPTION - DISC BRAKES (FRONT)

Each front disc brake assembly consists of the following components (Fig. 5):

- Caliper - single-piston, floating type
- Caliper adapter
- Shoe and lining assemblies
- Rotor

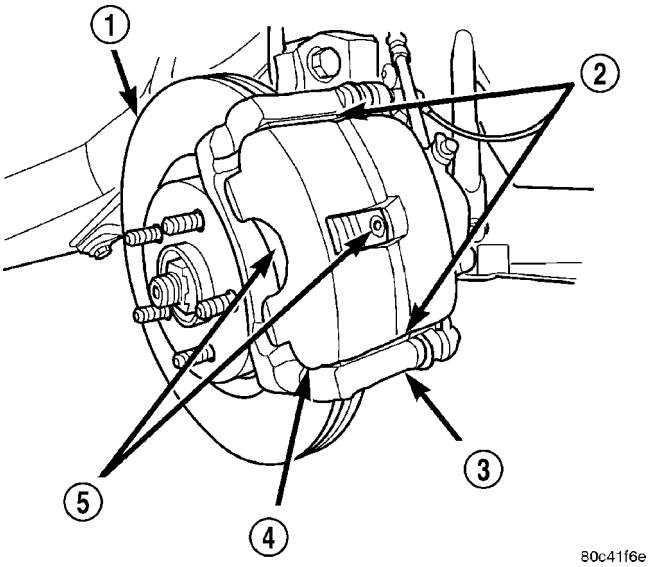

Fig. 5 Front Disc Brakes

1 - BRAKE ROTOR
2 - ABUTMENT SHIMS
3 - DISC BRAKE ADAPTER
4 - CALIPER
5 - BRAKE SHOES (PADS)

The caliper is a one-piece casting with the inboard side containing a single piston cylinder bore. The front disc brake caliper piston, is manufactured from a phenolic compound. The outside diameter of the caliper piston is 57 mm.

HYDRAULIC/MECHANICAL (Continued)

A square-cut rubber piston seal is located in a machined groove in the caliper cylinder bore. This seal provides a hydraulic seal between the piston and the cylinder wall (Fig. 6).

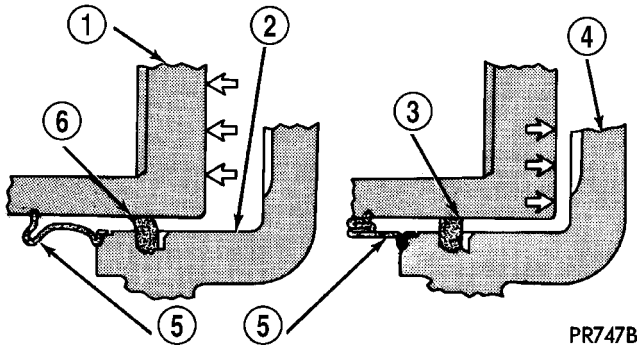

Fig. 6 Piston Seal Function

1 - PISTON
2 - CYLINDER BORE
3 - PISTON SEAL BRAKE PRESSURE OFF
4 - CALIPER HOUSING
5 - DUST BOOT
6 - PISTON SEAL BRAKE PRESSURE ON

A rubber dust boot is installed in a groove in cylinder bore opening and in a groove in the piston (Fig. 7). The boot prevents contamination in the bore area.

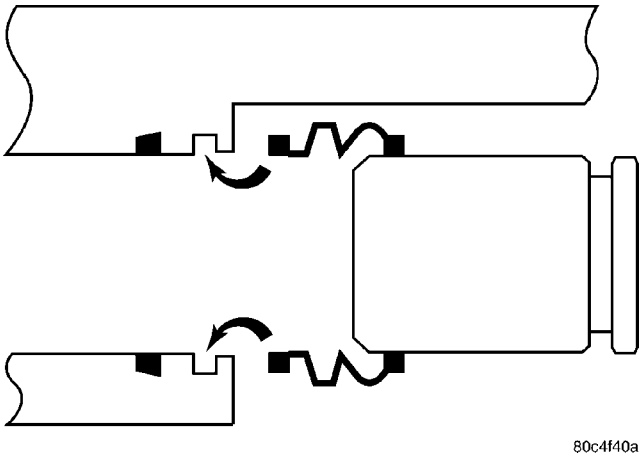

Fig. 7 Piston Boot Installation

The caliper is mounted to the caliper adapter using two guide pin bolts. These bolts thread into two guide pins, slid into the adapter (Fig. 8). The pins are lubricated and have boots to seal them in place in the adapter.

The disc brake caliper adapter is fastened to the steering knuckle using two bolts (Fig. 9).

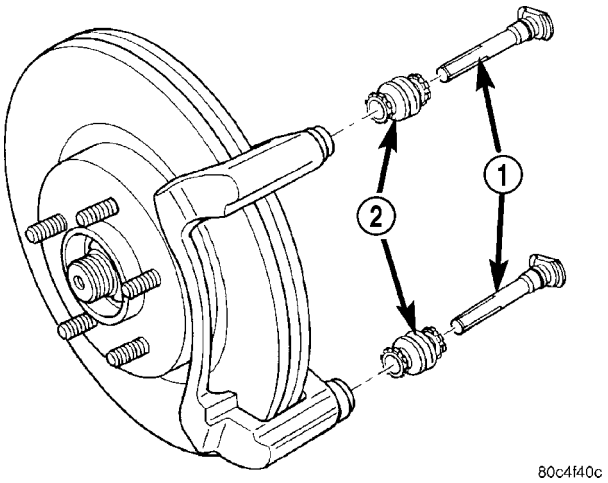

Fig. 8 Adapter, Boots And Pins

1 - PINS
2 - BOOTS

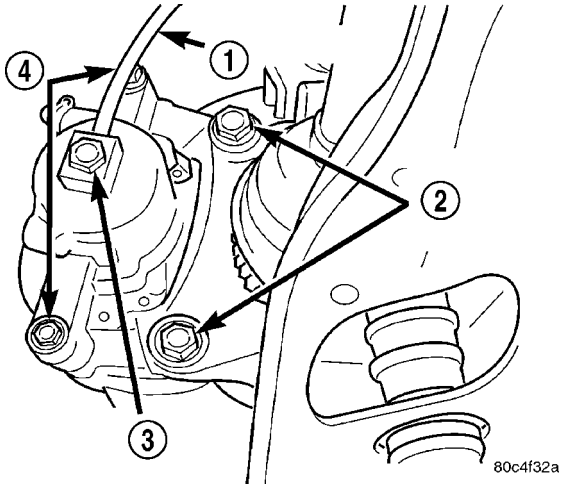

Fig. 9 Adapter Mounting

1 - BRAKE HOSE
2 - ADAPTER MOUNTING BOLTS
3 - BANJO BOLT
4 - CALIPER GUIDE PIN BOLTS

The machined abutments on the adapter position the brake shoes and caliper. There are two brake shoes, sometimes referred to as pads, per disc brake. One shoe is placed on each side of the brake rotor (Fig. 10). Two abutment shims (upper and lower) ride between the shoes and adapter. The shoes have springs permanently attached to them to help maintain a distance between the shoes and the caliper. When brake shoes are replaced, only brake shoes meeting the original equipment manufacturer (OEM) formulation (such as Mopar® replacement parts) should be used.

HYDRAULIC/MECHANICAL (Continued)

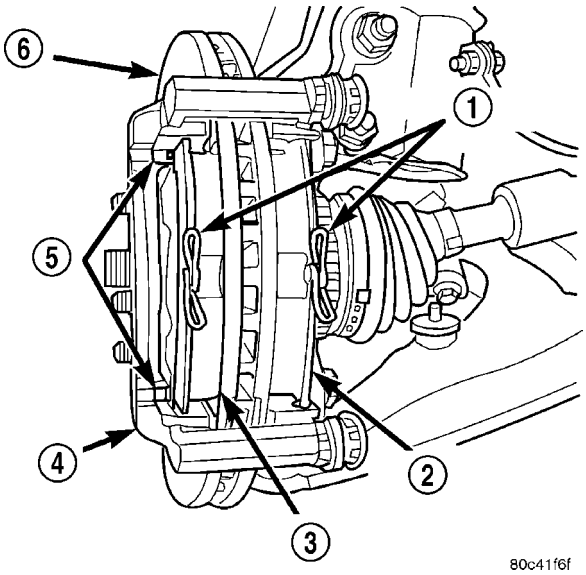

Fig. 10 Brake Shoes Mounted In Adapter

1 - SPRINGS
2 - INBOARD SHOE
3 - OUTBOARD SHOE
4 - DISC BRAKE ADAPTER
5 - ABUTMENT SHIMS
6 - BRAKE ROTOR

Front disc brakes are equipped with audible wear indicators on the inboard brake shoes.

Each front brake rotor is vented to help cool it during and after brake applications. It is mounted on the studs of the front wheel bearing hub.

This vehicle has an optional performance brake system. The sales code for this system is BR4. Although similar in appearance to the other disc brake systems available (BRB (Disc/Drum combination) and BRT (Disc/Disc combination)), this system features heavy duty wheel brake components. BR4 front disc brakes utilize brake rotors that have a pad contact surface approximately 5 mm thicker and brake calipers (and adapters) to accommodate that additional width. The BR4 calipers and rotors can be easily identified. Each BR4 brake caliper is marked “Turbo” while each rotor has a recessed machined area near the hub center (Fig. 11) (Fig. 12).

NOTE: Special care should be taken to assure that the correct caliper is used only with the correct rotor.

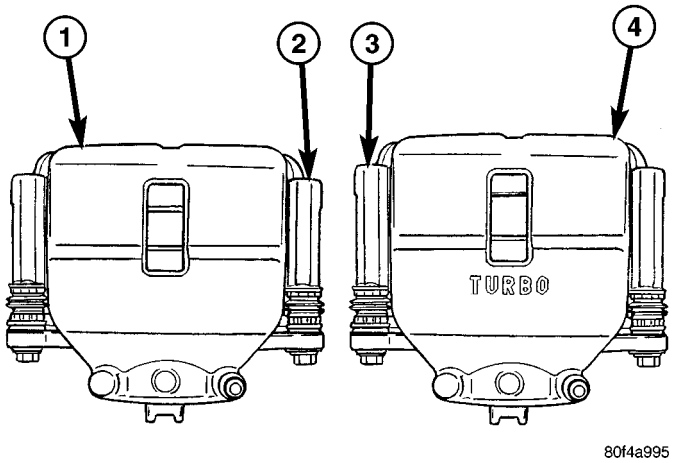

Fig. 11 Standard And BR4 Brake Calipers

1 - BRB/BRT FRONT BRAKE CALIPER
2 - ADAPTER
3 - ADAPTER
4 - BR4 FRONT BRAKE CALIPER

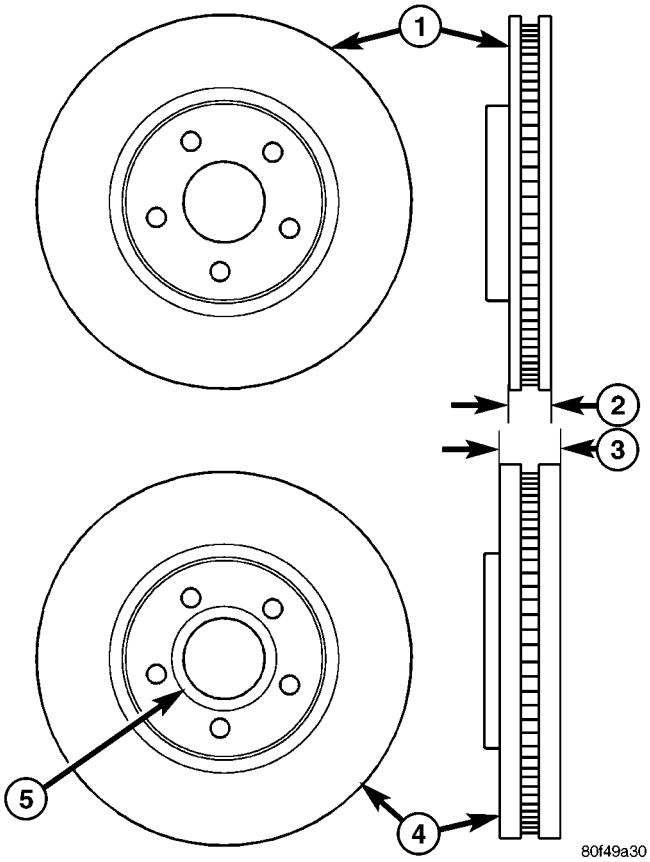

Fig. 12 Front Brake Rotor Comparison

1 - BRB/BRT BRAKE ROTOR
2 - STANDARD ROTOR THICKNESS 22.91-23.10 MM
3 - PERFORMANCE ROTOR THICKNESS 27.91-28.10 MM
4 - BR4 PERFORMANCE BRAKE ROTOR
5 - INDENTIFYING MACHINED AREA

HYDRAULIC/MECHANICAL (Continued)

DESCRIPTION - DISC BRAKES (REAR)

Rear disc brakes are optional equipment on some models of this vehicle (Fig. 13). The rear disc brakes are similar to the front disc brakes; however, there are several distinctive features that require different service procedures. Each rear disc brake consists of the following components:

- Caliper - single-piston, floating type
- Caliper adapter
- Shoe and lining assemblies
- Rotor - drum-in-hat type

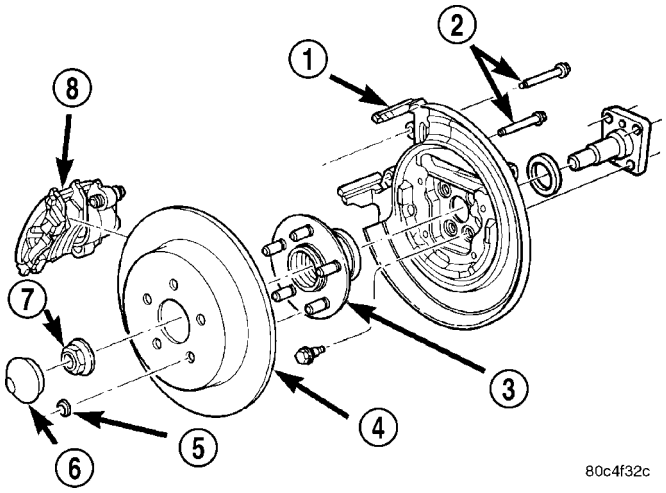

Fig. 13 Rear Disc Brakes

1 - DISC BRAKE ADAPTER
2 - GUIDE PIN BOLTS
3 - HUB AND BEARING
4 - BRAKE ROTOR
5 - RETAINER CLIP
6 - DUST CAP
7 - NUT
8 - DISC BRAKE CALIPER

Vehicles are equipped with a one piece caliper assembly that has a 36 mm (1.42 in.) piston and uses a solid non-vented 270 mm (10.63 in.) brake rotor.

The caliper assembly for all applications floats on rubber bushings using internal metal sleeves that are attached to the adapter using threaded guide pin bolts.

The brake caliper adapter is mounted to the rear suspension spindle. The adapter is used to mount the disc brake caliper to the vehicle (Fig. 13). The adapter has two machined abutments which are used to position and align the caliper and brake shoes for movement inboard and outboard.

When brake shoes, sometimes referred to as pads, are replaced, only brake shoes meeting the original equipment manufacturer (OEM) formulation (such as Mopar® replacement parts) should be used.

The adapter also mounts the parking brake shoes and actuating cables to the vehicle. All vehicles equipped with rear disc brakes have a small duo-servo drum brake mounted to the caliper adapter. This is part of the parking brake system. (Refer to 5 - BRAKES/PARKING BRAKE - DESCRIPTION)

This vehicle has an optional performance brake system. The sales code for this system is BR4. Although similar in appearance to the BRT (Disc/Disc combination), this system features heavy duty wheel brake components. BR4 rear disc brakes utilize brake rotors that have a pad contact surface approximately 3 mm thicker. To accommodate that additional width, instead of using wider calipers as the front brakes do, each rear brake shoe metal backing plate is 1.5 mm thinner than that of the standard BRT rear disc brakes (Fig. 14). BR4 brake rotors can be easily identified by the recessed machined area near the hub center (Fig. 15).

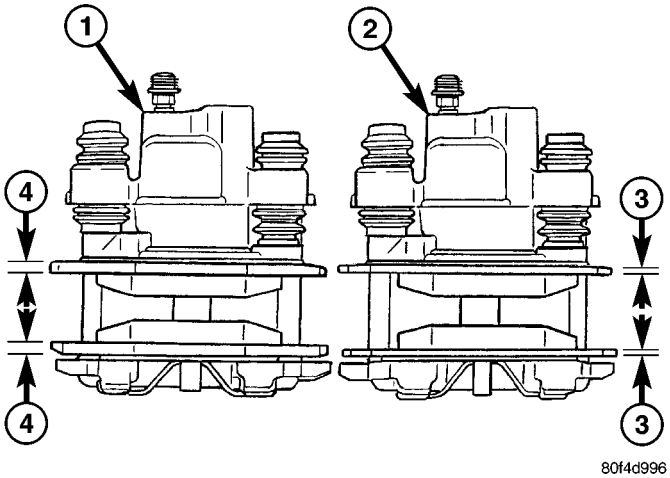

Fig. 14 Standard And BR4 Brake Shoes

1 - BRAKE CALIPER WITH BRT SHOES
2 - BRAKE CALIPER WITH BR4 SHOES
3 - 4.5 MM
4 - 6.0 MM

NOTE: Special care should be taken to assure that the correct brake shoes are used only with the correct rotor.

DESCRIPTION - DRUM BRAKES (REAR)

Rear drum brakes are standard equipment on this vehicle. The rear drum brakes consist of the major components listed in the figure (Fig. 16). Other components related to the brake shoes themselves can be seen in the next figure (Fig. 17).

HYDRAULIC/MECHANICAL (Continued)

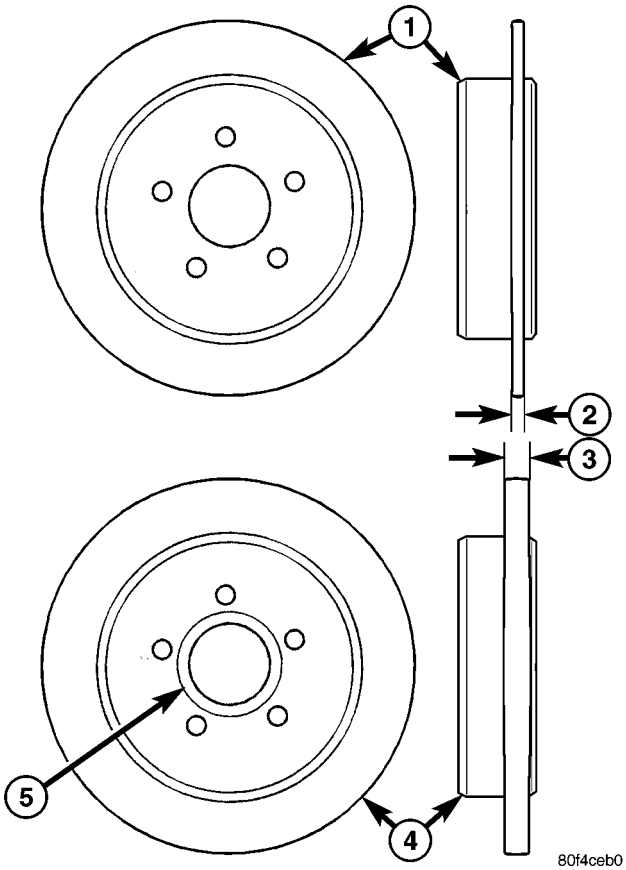

Fig. 15 Rear Brake Rotor Comparison

1 - BRT BRAKE ROTOR
2 - STANDARD ROTOR THICKNESS 8.75-9.25 MM
3 - PERFORMANCE ROTOR THICKNESS 11.75-12.25 MM
4 - BR4 PERFORMANCE BRAKE ROTOR
5 - INDENTIFYING MACHINED AREA

The rear wheel drum brakes are a two-shoe, internal-expanding type with an automatic adjuster screw (Fig. 17). The automatic adjuster screw is actuated each time the brakes are applied. The automatic adjuster screw is located directly below the wheel cylinder.

DIAGNOSIS AND TESTING - DRUM BRAKE AUTOMATIC ADJUSTER

To properly test the drum brake automatic adjuster, the aide of a helper inside the vehicle to apply the brakes will be necessary.

(1) Raise the vehicle. (Refer to LUBRICATION & MAINTENANCE/HOISTING - STANDARD PROCEDURE).

(2) Remove the access plug from the rear adjustment slot in each brake support plate.

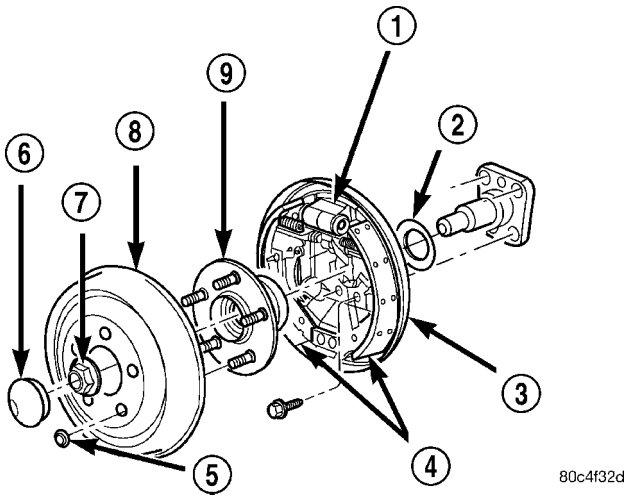

Fig. 16 Rear Drum Brakes

1 - WHEEL CYLINDER
2 - SEAL
3 - SUPPORT PLATE
4 - BRAKE SHOES
5 - RETAINER CLIP
6 - DUST CAP
7 - NUT
8 - DRUM
9 - HUB AND BEARING

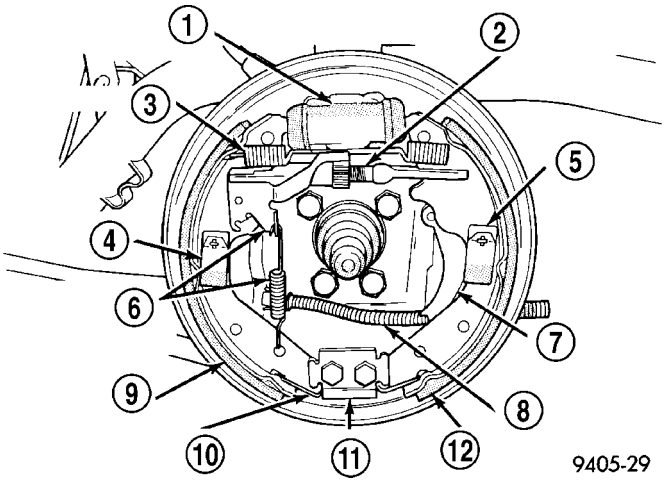

Fig. 17 Drum Brake Shoes (Left Side Shown)

1 - WHEEL CYLINDER
2 - AUTOMATIC ADJUSTER SCREW ASSEMBLY
3 - RETURN SPRING
4 - HOLD DOWN CLIP
5 - HOLD DOWN CLIP
6 - AUTOMATIC ADJUSTER LEVER AND SPRING
7 - PARK BRAKE LEVER
8 - PARK BRAKE CABLE
9 - FRONT BRAKE SHOE
10 - BRAKESHOE TO ANCHOR SPRING
11 - BRAKE ANCHOR PLATE
12 - REAR BRAKE SHOE

HYDRAULIC/MECHANICAL (Continued)

(3) Insert a thin screwdriver in the adjustment slot and push back the adjustment lever. With the lever in this position, back the star wheel adjustment off approximately 10 notches. This will eliminate the possibility that the brake is at full adjustment, and can be adjusted no further.

(4) Remove the screwdriver from the adjustment slot.

(5) Watch the star wheel through the adjustment slot, while a helper applies the brake pedal. As the brake shoes apply, the adjustment lever should move downward, turning the star wheel. A definite rotation of the adjuster star wheel can be observed if the automatic adjuster is working properly.

If the star wheel does not move as indicated, the brake drum needs to be removed and further inspection of the rear brakes is necessary.

(6) If the star wheel is operating properly, readjust the brakes. (Refer to 5 - BRAKES/HYDRAULIC/MECHANICAL/BRAKE PADS/SHOES - ADJUSTMENTS).

(7) Reinstall the adjustment slot access plug.

(8) Lower the vehicle.

BRAKE LINES

DESCRIPTION - BRAKE TUBES AND HOSES

The brake tubes are steel with a corrosion-resistant nylon coating applied to the external surfaces. The flex hoses are made of reinforced rubber with fittings at each end.

OPERATION - BRAKE TUBES AND HOSES

The purpose of the brake tubes and flex hoses is to transfer brake fluid pressure, developed by the master cylinder to the brakes at each wheel of the vehicle. The flex hoses connect the chassis brake tubes which are mounted to the vehicle's underbody to the brake at each wheel, allowing for movement of the vehicle's suspension.

INSPECTION - BRAKE TUBES AND HOSES

Flexible rubber hose is used at both front and rear brakes. Inspection of brake hoses should be performed whenever the brake system is serviced and every 7,500 miles or 12 months, whichever comes first (every engine oil change). Inspect hydraulic brake hoses for severe surface cracking, scuffing, worn spots or physical damage. If the fabric casing of the rubber hose becomes exposed due to cracks or abrasions in the rubber hose cover, the hose should be replaced immediately. Eventual deterioration of the hose can take place with possible burst failure. Faulty installation can cause twisting, resulting in wheel, tire, or chassis interference.

The steel brake tubing should be inspected periodically for evidence of corrosion, physical damage or contact with moving or hot components of the vehicle.

BRAKE PADS/SHOES - FRONT

REMOVAL

NOTE: Before proceeding, (Refer to 5 - BRAKES - WARNING)(Refer to 5 - BRAKES - CAUTION).

(1) Raise the vehicle. (Refer to LUBRICATION & MAINTENANCE/HOISTING - STANDARD PROCEDURE)

NOTE: Perform Step 2 through Step 5 on each side of the vehicle to complete shoe set removal.

(2) Remove the front tire and wheel assembly.

(3) Remove the two brake caliper guide pin bolts (Fig. 18).

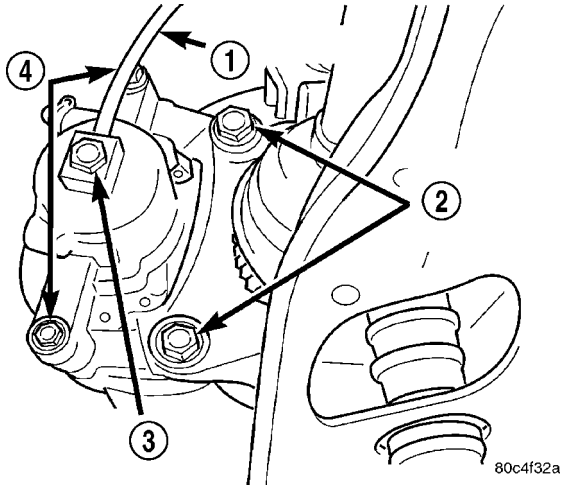

Fig. 18 Brake Caliper Mounting (Typical)

1 - BRAKE HOSE
2 - ADAPTER MOUNTING BOLTS
3 - BANJO BOLT
4 - CALIPER GUIDE PIN BOLTS

(4) Remove the disc brake caliper from the disc brake adapter and hang out of the way using wire or a bungee cord. Use care not to overextend the brake hose when doing this.

BRAKE PADS/SHOES - FRONT (Continued)

(5) Remove the brake shoes from the disc brake caliper adapter (Fig. 19).

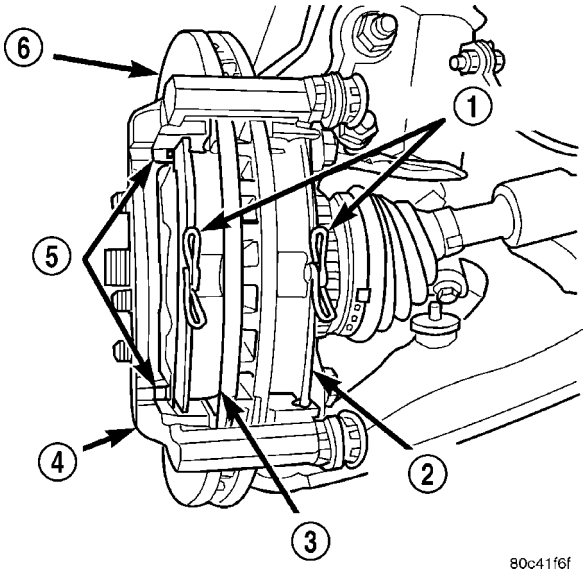

Fig. 19 Brake Shoes Mounted In Adapter

1 - SPRINGS
2 - INBOARD SHOE
3 - OUTBOARD SHOE
4 - DISC BRAKE ADAPTER
5 - ABUTMENT SHIMS
6 - BRAKE ROTOR

CLEANING - DISC BRAKE SHOES

WARNING: DUST AND DIRT ACCUMULATING ON BRAKE PARTS DURING NORMAL USE MAY CONTAIN ASBESTOS FIBERS FROM PRODUCTION OR AFTERMARKET BRAKE LININGS. BREATHING EXCESSIVE CONCENTRATIONS OF ASBESTOS FIBERS CAN CAUSE SERIOUS BODILY HARM. EXERCISE CARE WHEN SERVICING BRAKE PARTS. DO NOT SAND OR GRIND BRAKE LINING UNLESS EQUIPMENT USED IS DESIGNED TO CONTAIN THE DUST RESIDUE. DO NOT CLEAN BRAKE PARTS WITH COMPRESSED AIR OR BY DRY BRUSHING. CLEANING SHOULD BE DONE BY DAMPENING THE BRAKE COMPONENTS WITH A FINE MIST OF WATER, THEN WIPING THE BRAKE COMPONENTS CLEAN WITH A DAMPENED CLOTH. DISPOSE OF CLOTH AND ALL RESIDUE CONTAINING ASBESTOS FIBERS IN AN IMPERMEABLE CONTAINER WITH THE APPROPRIATE LABEL. FOLLOW PRACTICES PRESCRIBED BY THE OCCUPATIONAL SAFETY AND HEALTH ADMINISTRATION (OSHA) AND THE ENVIRONMENTAL PROTECTION AGENCY (EPA) FOR THE HANDLING, PROCESSING, AND DISPOSING OF DUST OR DEBRIS THAT MAY CONTAIN ASBESTOS FIBERS.

INSPECTION - DISC BRAKE SHOES

Visually inspect brake shoes (pads) for uneven lining wear. Also inspect for excessive lining deterioration. Check the clearance between the tips of the wear indicators on the shoes (if equipped) and the brake rotors.

If a visual inspection does not adequately determine the condition of the lining, a physical check will be necessary. To check the amount of lining wear, remove the disc brake shoes from the calipers.

Measure each brake shoe. The combined brake shoe and its lining material thickness should be measured at its thinnest point.

- For front disc brake shoes, when a set of brake shoes are worn to a thickness of approximately 7.95 mm (5/16 inch), they should be replaced.
- For rear disc brake shoes, when a set of brake shoes are worn to a thickness of approximately 9.0 mm (3/8 inch), they should be replaced.
- Typically, if front shoes are worn out, both fronts and rears need to be replaced. Make sure to check rears.

Replace **both** disc brake shoes (inboard and outboard) on each caliper. It is necessary to replace the shoes on the opposite side of the vehicle as well as the shoes failing inspection.

If the brake shoe assemblies do not require replacement, be sure to reinstall the brake shoes in the original position they were remove from.

INSTALLATION

NOTE: Perform Step 1 through Step 5 on each side of the vehicle to complete shoe set installation, then proceed to Step 6.

NOTE: Inboard brake shoes are not identical side-to-side. This is due to placement of the audible wear indicator on the end of each inboard shoe. Make sure that the audible wear indicators are placed toward the top when the inboard shoes are installed on each side of the vehicle.

(1) Place the brake shoes in the abutment shims clipped into the disc brake caliper adapter as shown (Fig. 19). Place the shoe with the wear indicator attached on the inboard side.

(2) Completely retract the caliper piston back into the bore of the caliper.

CAUTION: Use care when installing the caliper onto the disc brake adapter to avoid damaging the boots on the caliper guide pins.

BRAKE PADS/SHOES - FRONT (Continued)

(3) Install the disc brake caliper over the brake shoes on the brake caliper adapter. Make sure the springs on the shoes do not get caught in the hole formed into the center of the caliper housing.

(4) Align the caliper guide pin bolt holes with the guide pins. Install the caliper guide pin bolts and tighten them to a torque of 35 N·m (26 ft. lbs.) (Fig. 18).

(5) Install the tire and wheel assembly. Tighten the wheel mounting nuts to a torque of 135 N·m (100 ft. lbs.).

(6) Lower the vehicle.

(7) Pump the brake pedal several times before moving the vehicle to set the shoes to the brake rotor.

(8) Check and adjust the brake fluid level as necessary.

(9) Road test the vehicle and make several stops to wear off any foreign material on the brakes and to seat the brake shoes.

BRAKE PADS/SHOES - REAR DISC

REMOVAL

NOTE: Before proceeding, (Refer to 5 - BRAKES - WARNING)(Refer to 5 - BRAKES - CAUTION).

(1) Raise the vehicle. (Refer to LUBRICATION & MAINTENANCE/HOISTING - STANDARD PROCEDURE)

(2) Remove both rear tire and wheel assemblies from vehicle.

NOTE: Perform Step 3 through Step 7 on each side of the vehicle to complete shoe set removal.

NOTE: In some cases, it may be necessary to retract the caliper piston in its bore a small amount in order to provide sufficient clearance between the shoes and the rotor to easily remove the caliper from the knuckle. This can usually be accomplished before the guide pin bolts are removed, by grasping the rear of the caliper and pulling outward working with the guide pins, thus retracting the piston. Never push on the piston directly as it may get damaged.

(3) Remove the two caliper guide pin bolts (Fig. 20).

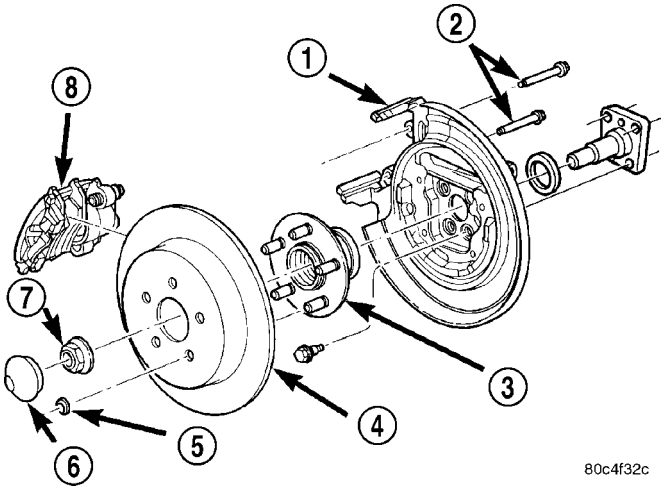

Fig. 20 Caliper And Rotor Mounting

1 - DISC BRAKE ADAPTER
2 - GUIDE PIN BOLTS
3 - HUB AND BEARING
4 - BRAKE ROTOR
5 - RETAINER CLIP
6 - DUST CAP
7 - NUT
8 - DISC BRAKE CALIPER

(4) Remove the caliper assembly from the brake adapter by first rotating the top of the caliper away from the rotor, and then lifting the caliper assembly off the machined abutment on the adapter (Fig. 21).

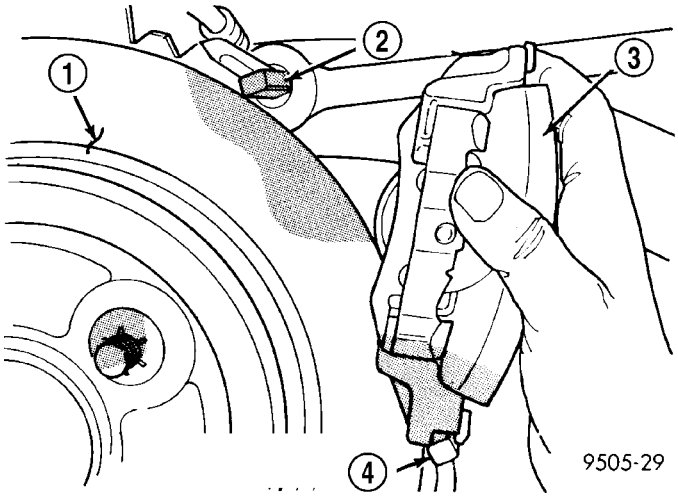

Fig. 21 Caliper Removal/Installation

1 - BRAKING DISC
2 - CALIPER ADAPTER
3 - CALIPER
4 - LOWER MACHINED ADAPTER ABUTMENT

BRAKE PADS/SHOES - REAR DISC (Continued)

(5) Hang the brake caliper from rear strut using wire or cord to prevent the weight of the caliper from damaging the brake hose (Fig. 22).

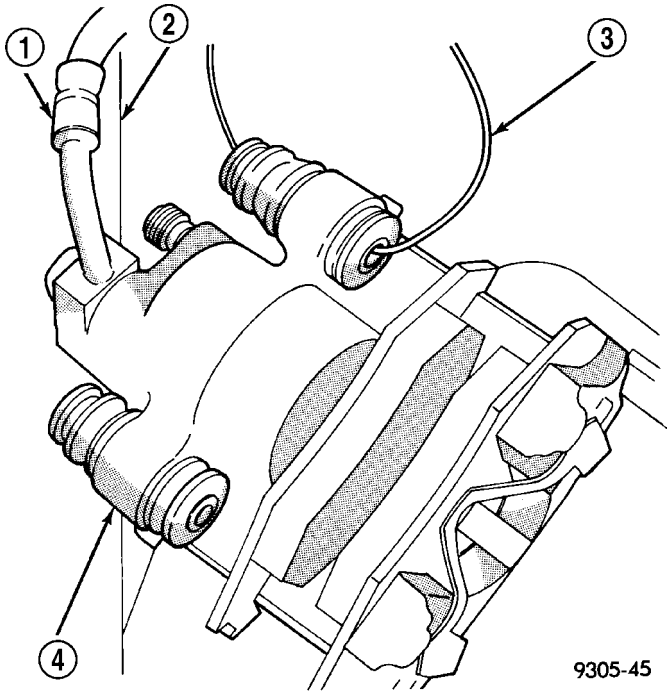

Fig. 22 Supporting Caliper

1 - FLEX HOSE
2 - STRUT
3 - WIRE HANGER
4 - CALIPER ASSEMBLY

(6) Remove the outboard brake shoe from the caliper by prying the brake shoe retaining clip over the raised area on the caliper. Then slide the brake shoe down and off of the brake caliper (Fig. 23).

(7) Pull the inboard brake shoe away from caliper piston until the retaining clip is free from the cavity in the piston (Fig. 24).

CLEANING - DISC BRAKE SHOES

WARNING: DUST AND DIRT ACCUMULATING ON BRAKE PARTS DURING NORMAL USE MAY CONTAIN ASBESTOS FIBERS FROM PRODUCTION OR AFTERMARKET BRAKE LININGS. BREATHING EXCESSIVE CONCENTRATIONS OF ASBESTOS FIBERS CAN CAUSE SERIOUS BODILY HARM. EXERCISE CARE WHEN SERVICING BRAKE PARTS. DO NOT SAND OR GRIND BRAKE LINING UNLESS EQUIPMENT USED IS DESIGNED TO CONTAIN THE DUST RESIDUE. DO NOT CLEAN BRAKE PARTS WITH COMPRESSED AIR OR BY DRY BRUSHING. CLEANING SHOULD BE DONE BY DAMPENING THE BRAKE COMPONENTS WITH A FINE MIST OF WATER, THEN WIPING THE BRAKE COMPONENTS CLEAN WITH A DAMPENED CLOTH.

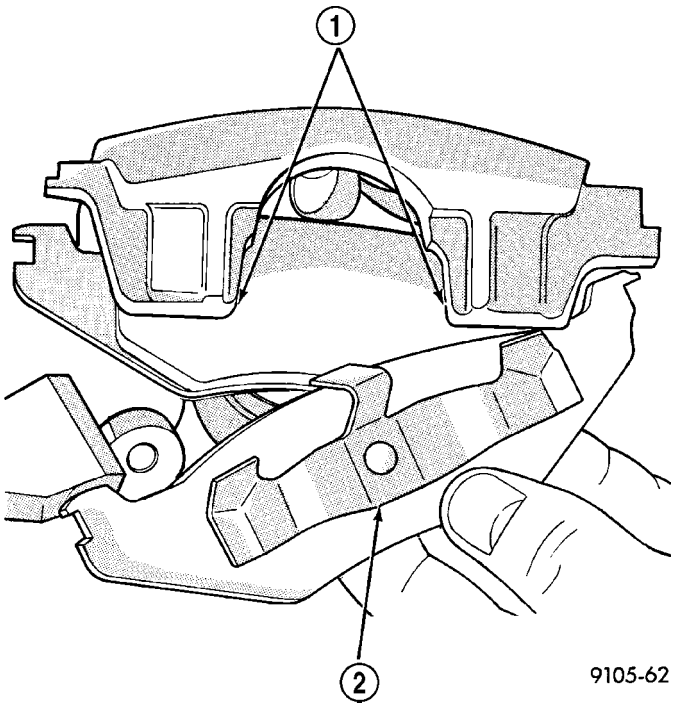

Fig. 23 Outboard Brake Shoe

1 - CALIPER FINGERS
2 - RETAINING CLIP

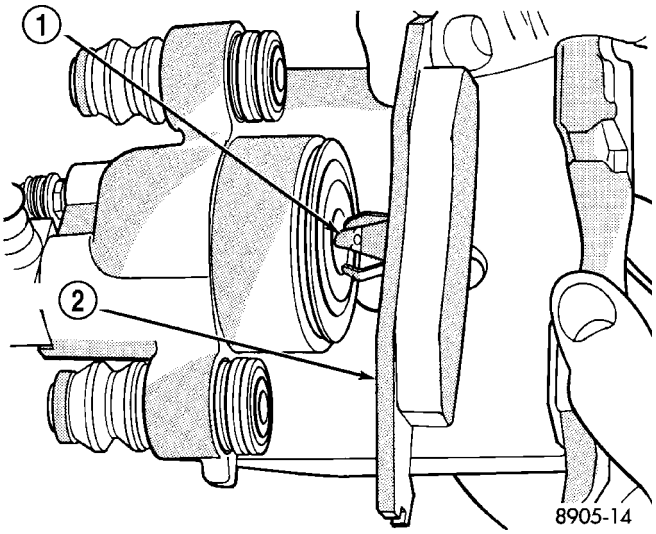

Fig. 24 Inboard Brake Shoe

1 - RETAINING CLIP
2 - INBOARD SHOE

DISPOSE OF CLOTH AND ALL RESIDUE CONTAINING ASBESTOS FIBERS IN AN IMPERMEABLE CONTAINER WITH THE APPROPRIATE LABEL. FOLLOW PRACTICES PRESCRIBED BY THE OCCUPATIONAL SAFETY AND HEALTH ADMINISTRATION (OSHA) AND THE ENVIRONMENTAL PROTECTION AGENCY (EPA) FOR THE HANDLING, PROCESSING, AND DISPOSING OF DUST OR DEBRIS THAT MAY CONTAIN ASBESTOS FIBERS.

BRAKE PADS/SHOES - REAR DISC (Continued)

INSPECTION - DISC BRAKE SHOES

Visually inspect brake shoes (pads) for uneven lining wear. Also inspect for excessive lining deterioration. Check the clearance between the tips of the wear indicators on the shoes (if equipped) and the brake rotors.

If a visual inspection does not adequately determine the condition of the lining, a physical check will be necessary. To check the amount of lining wear, remove the disc brake shoes from the calipers.

Measure each brake shoe. The combined brake shoe and its lining material thickness should be measured at its thinnest point.

- For front disc brake shoes, when a set of brake shoes are worn to a thickness of approximately 7.95 mm (5/16 inch), they should be replaced.
- For rear disc brake shoes, when a set of brake shoes are worn to a thickness of approximately 9.0 mm (3/8 inch), they should be replaced.
- Typically, if front shoes are worn out, both fronts and rears need to be replaced. Make sure to check rears.

Replace **both** disc brake shoes (inboard and outboard) on each caliper. It is necessary to replace the shoes on the opposite side of the vehicle as well as the shoes failing inspection.

If the brake shoe assemblies do not require replacement, be sure to reinstall the brake shoes in the original position they were remove from.

INSTALLATION

CAUTION: When installing new brake components, be sure to use correct parts. Parts designed for BR4 Performance Brake System must not be mixed with other brake systems. These parts, similar in appearance, can be easily identified (Fig. 14) (Fig. 15).(Refer to 5 - BRAKES/HYDRAULIC/MECHANICAL - DESCRIPTION - DISC BRAKES (REAR))

NOTE: Perform Step 1 through Step 7 on each side of the vehicle to complete shoe set installation, then proceed to Step 8.

(1) Completely retract the caliper piston back into piston bore of the caliper. This is required to gain the necessary shoe-to-rotor clearance for the caliper installation onto the steering knuckle.

(2) Install the inboard brake shoe into the caliper piston by firmly pressing the shoe in with the thumbs (Fig. 24). Be sure the inboard brake shoe is positioned squarely against the face of the caliper piston.

(3) Slide the outboard brake shoe onto the caliper assembly (Fig. 23). Be sure the retaining clip is squarely seated in the depressed areas on the caliper.

(4) Lubricate both adapter caliper slide abutments with a liberal amount of Mopar® Multipurpose Lubricant, or an equivalent.

CAUTION: Use care when installing the caliper assembly onto adapter so the guide pin bushings and sleeves do not get damaged by the mounting bosses on adapter.

(5) Starting with the lower end, carefully lower the caliper and brake shoes over the brake rotor and catch the caliper's bottom edge behind the caliper slide abutment (Fig. 21). Rotate the top of the caliper into mounting position on the adapter.

CAUTION: Extreme caution should be taken not to cross thread the caliper guide pin bolts when they are installed.

(6) Carefully install the caliper guide pin bolts (Fig. 20), then tighten them to a torque of 22 N·m (192 in. lbs.).

(7) Install the tire and wheel assembly. Tighten the wheel mounting nuts to a torque of 135 N·m (100 ft. lbs.).

(8) Lower the vehicle.

(9) Pump the brake pedal several times to ensure the vehicle has a firm brake pedal before moving the vehicle.

(10) Road test the vehicle and make several stops to wear off any foreign material on the brakes and to seat the brake shoes.

BRAKE PADS/SHOES - REAR DRUM

REMOVAL

NOTE: Before proceeding, (Refer to 5 - BRAKES - WARNING)(Refer to 5 - BRAKES - CAUTION).

(1) Raise the vehicle. (Refer to LUBRICATION & MAINTENANCE/HOISTING - STANDARD PROCEDURE)

(2) Remove both rear tire and wheel assemblies from vehicle.

NOTE: Perform Step 3 through Step 11 on each side of the vehicle to complete shoe set removal. It may be easier to install the new components on the first side of the vehicle before disassembling the opposite side, so it may be used as a reference guide for proper installation. (Refer to 5 - BRAKES/HYDRAULIC/MECHANICAL/BRAKE PADS/SHOES - REAR DRUM - INSTALLATION)

BRAKE PADS/SHOES - REAR DRUM (Continued)

(3) Remove the brake drum retaining clips (if equipped) (Fig. 25).

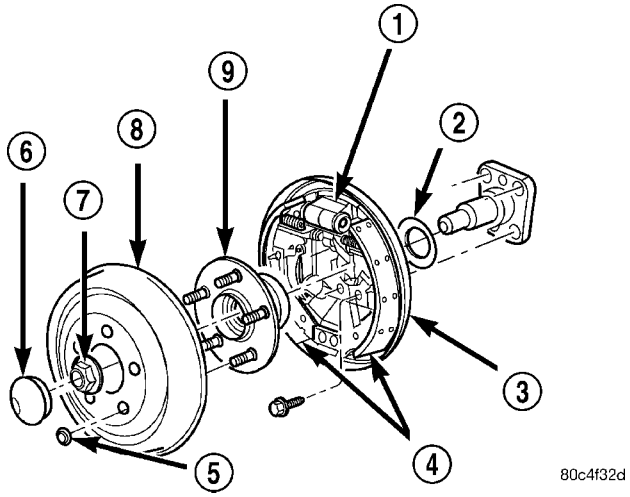

Fig. 25 Drum Brakes

1 - WHEEL CYLINDER
2 - SEAL
3 - SUPPORT PLATE
4 - BRAKE SHOES
5 - RETAINER CLIP
6 - DUST CAP
7 - NUT
8 - DRUM
9 - HUB AND BEARING

(4) Remove the brake drum (Fig. 25).

(5) Remove the automatic adjustment lever-to-brake shoe spring (Fig. 26).

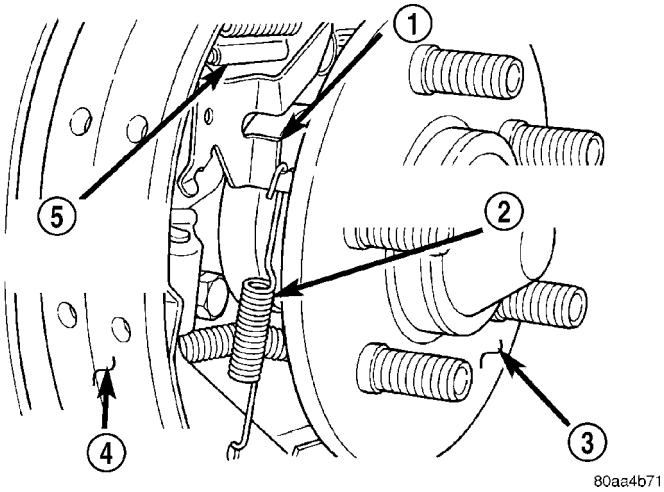

Fig. 26 Automatic Adjustment Lever Spring

1 - ADJUSTMENT LEVER
2 - ADJUSTMENT LEVER TO BRAKE SHOE SPRING
3 - HUB/BEARING
4 - LEADING BRAKE SHOE
5 - AUTOMATIC ADJUSTER SCREW

(6) Remove the automatic adjustment lever (Fig. 27)from the brake shoe.

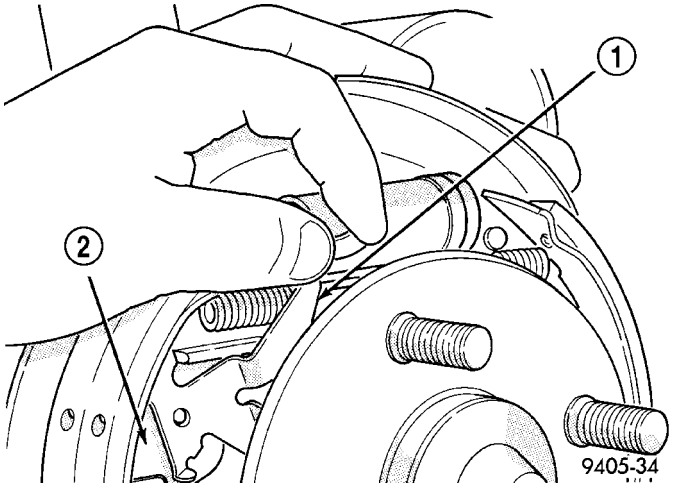

Fig. 27 Automatic Adjustment Lever

1 - AUTOMATIC ADJUSTMENT LEVER
2 - FRONT BRAKE SHOE ASSEMBLY

(7) Remove the hold down clips and pins attaching the leading and trailing brake shoes to the brake support plate (Fig. 28).

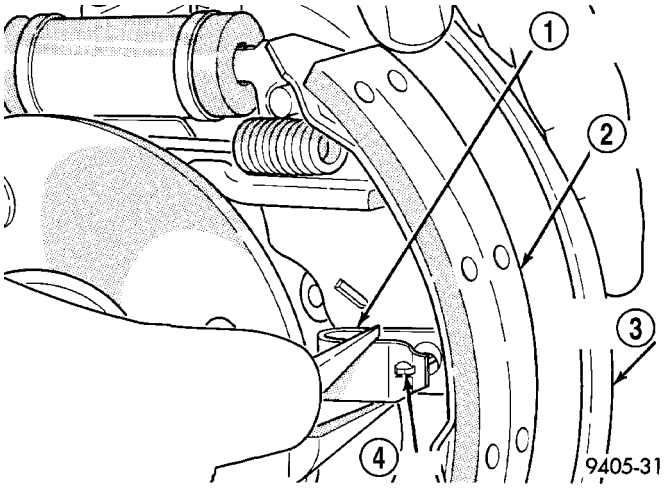

Fig. 28 Hold Down Clips And Pins

1 - HOLD DOWN CLIP
2 - BRAKE SHOE
3 - SUPPORT PLATE
4 - PIN

BRAKE PADS/SHOES - REAR DRUM (Continued)

(8) Remove the lower brake shoe-to-shoe return spring (Fig. 29).

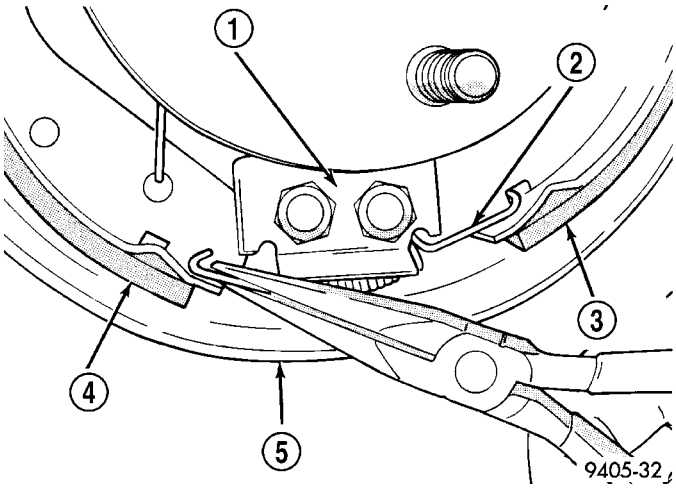

Fig. 29 Shoe-To-Shoe Return Spring

1 - ANCHOR PLATE
2 - LOWER BRAKE SHOE RETURN SPRING
3 - REAR BRAKE SHOE
4 - FRONT BRAKE SHOE
5 - BRAKE SUPPORT PLATE

(9) Remove the parking brake lever pin-to-brake shoe retaining clip (Fig. 30).

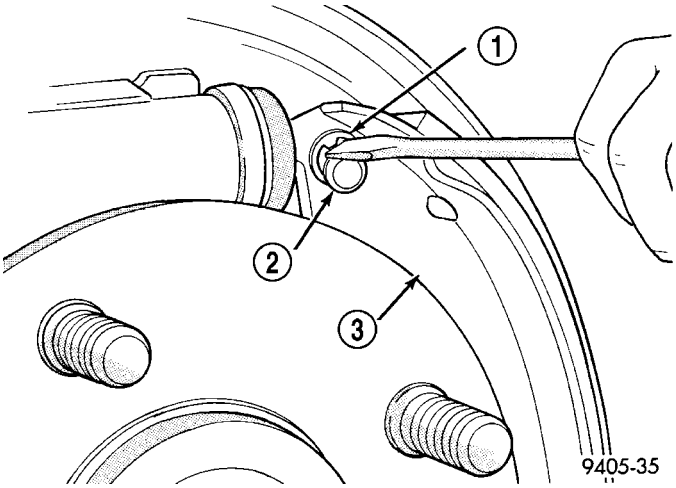

Fig. 30 Parking Brake Lever Pin To Brake Shoe Retaining Clip

1 - RETAINING CLIP
2 - PARK BRAKE LEVER PIN
3 - PARK BRAKE LEVER

(10) Remove the leading and trailing brake shoes, upper return spring and automatic adjuster screw from the brake support plate as an assembly (Fig. 31).

(11) Disassemble the shoes completely once on the bench.

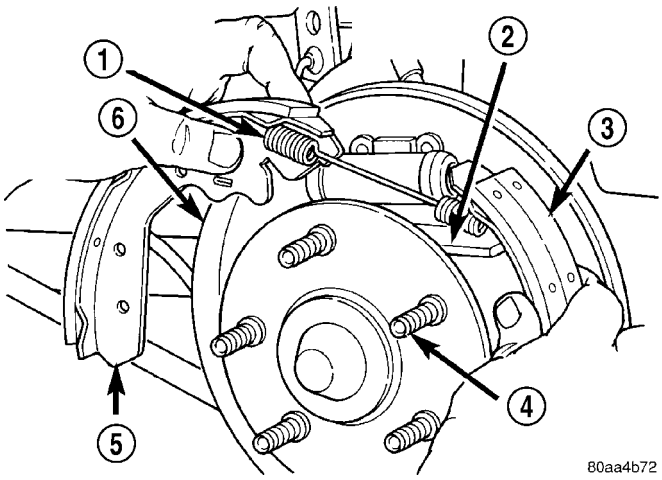

Fig. 31 Brake Shoe Removal/Installation

1 - UPPER RETURN SPRING
2 - AUTOMATIC ADJUSTER SCREW
3 - TRAILING BRAKE SHOE
4 - WHEEL MOUNTING STUDS
5 - LEADING BRAKE SHOE
6 - BRAKE SUPPORT PLATE

CLEANING - DRUM BRAKE SHOES

WARNING: DUST AND DIRT ACCUMULATING ON BRAKE PARTS DURING NORMAL USE MAY CONTAIN ASBESTOS FIBERS FROM PRODUCTION OR AFTERMARKET BRAKE LININGS. BREATHING EXCESSIVE CONCENTRATIONS OF ASBESTOS FIBERS CAN CAUSE SERIOUS BODILY HARM. EXERCISE CARE WHEN SERVICING BRAKE PARTS. DO NOT SAND OR GRIND BRAKE LINING UNLESS EQUIPMENT USED IS DESIGNED TO CONTAIN THE DUST RESIDUE. DO NOT CLEAN BRAKE PARTS WITH COMPRESSED AIR OR BY DRY BRUSHING. CLEANING SHOULD BE DONE BY DAMPENING THE BRAKE COMPONENTS WITH A FINE MIST OF WATER, THEN WIPING THE BRAKE COMPONENTS CLEAN WITH A DAMPENED CLOTH. DISPOSE OF CLOTH AND ALL RESIDUE CONTAINING ASBESTOS FIBERS IN AN IMPERMEABLE CONTAINER WITH THE APPROPRIATE LABEL. FOLLOW PRACTICES PRESCRIBED BY THE OCCUPATIONAL SAFETY AND HEALTH ADMINISTRATION (OSHA) AND THE ENVIRONMENTAL PROTECTION AGENCY (EPA) FOR THE HANDLING, PROCESSING, AND DISPOSING OF DUST OR DEBRIS THAT MAY CONTAIN ASBESTOS FIBERS.

INSPECTION - DRUM BRAKE SHOES

Rear brake shoe lining should show contact across the entire width of the lining and also from the heel to the toe of the lining. Replace the shoes if noted otherwise.

BRAKE PADS/SHOES - REAR DRUM (Continued)

Brake shoes with lack of contact at the toe or heel of the brake shoe lining may be improperly ground.

Clean and inspect the brake support plate and shoe adjuster screw. Apply a thin coat of Mopar Multi-Purpose Lubricant or equivalent to the threads of the self-adjuster (Fig. 32). Replace the adjuster screw if it is corroded.

NOTE: Adjuster screws are different side-to-side. Left side adjuster screws have left-hand threads and right side adjuster screws have right-handed threads.

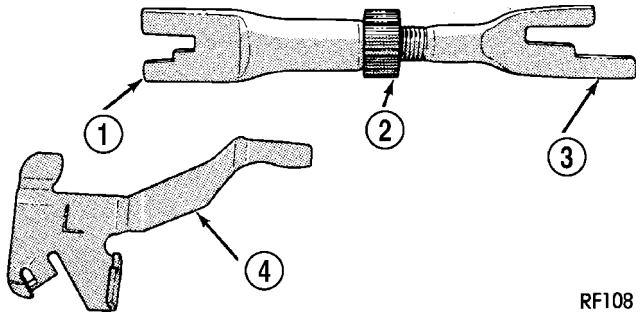

Fig. 32 Adjuster Screw And Lever (Typical)

1 - OUTBOARD FORWARD
2 - SELF ADJUSTER
3 - OUTBOARD REAR
4 - SELF ADJUSTER LEVER

If the old brake shoe return or hold down springs have overheated or are damaged, replace them. Overheating indications are paint discoloration or distorted end coils.

INSTALLATION

NOTE: Perform Step 1 through Step 11 on each side of the vehicle to complete shoe set installation, then proceed to Step 12.

(1) Lubricate the eight shoe contact areas on the support plate and anchor using Mopar Multi-Purpose Lubricant or equivalent (Fig. 33).

(2) Assemble the front and rear brake shoe assembly, automatic adjuster screw, and upper return spring before installation on the vehicle.

(3) Install the pre-assembled brake shoes, automatic adjuster screw and upper return spring on the brake support plate (Fig. 31).

(4) Install the wave washer on the pin of park brake lever.

(5) Install the pin on the parking brake lever into hole in rear brake shoe assembly (Fig. 34).

(6) Install both brake shoe-to-brake support plate hold down pins and clips (Fig. 28).

(7) Install the lower shoe-to-shoe plate return spring (Fig. 29). Do not overstretch the spring when installing.

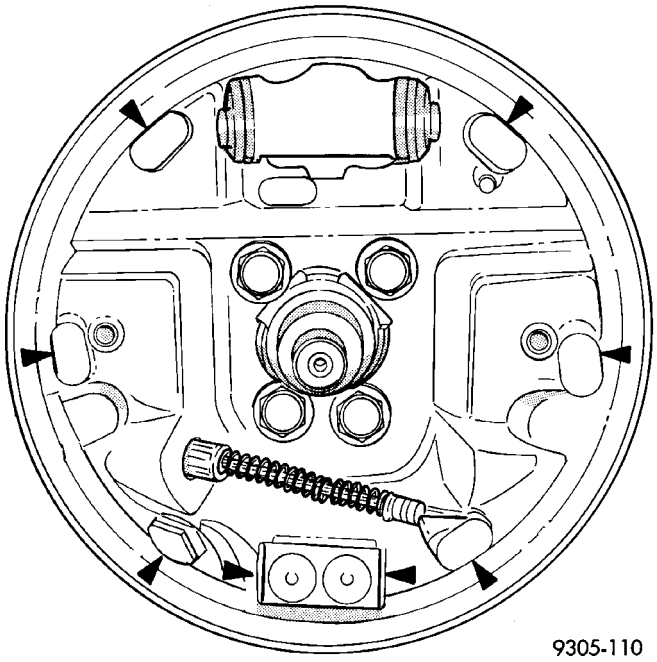

Fig. 33 Shoe Contact Areas on Support Plate

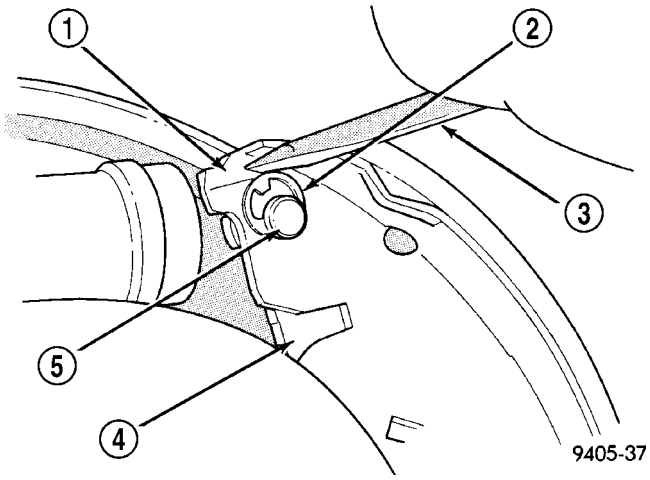

Fig. 34 Parking Brake Lever Pin Retaining Clip Installation

1 - BRAKE SHOE ASSEMBLY
2 - RETAINING CLIP
3 - SCREWDRIVER
4 - PARK BRAKE LEVER
5 - PARK BRAKE LEVER PIN

(8) Install the automatic adjustment lever on the leading brake shoe (Fig. 27).

(9) Install the automatic adjustment lever-to-brake shoe spring (Fig. 26). Do not overstretch the spring when installing.

(10) Adjust the brake shoes to the drum diameter using a brake shoe gauge. (Refer to 5 - BRAKES/HYDRAULIC/MECHANICAL/BRAKE PADS/SHOES - ADJUSTMENTS)

(11) Install the brake drum (Fig. 25).

BRAKE PADS/SHOES - REAR DRUM (Continued)

(12) Install the tire and wheel assemblies. Tighten the wheel mounting nuts to a torque of 135 N·m (100 ft. lbs.).

(13) Verify that the brake drum lightly drags on the shoes.

(14) Lower the vehicle.

(15) Road test vehicle stopping in both the forward and reverse directions. The automatic-adjuster will continue to adjust the brakes during the road test of the vehicle.

ADJUSTMENTS

ADJUSTMENT - DRUM BRAKE SHOES

NOTE: Before proceeding, (Refer to 5 - BRAKES - WARNING)(Refer to 5 - BRAKES - CAUTION).

(1) Verify the parking brake lever is in the fully released position.

(2) Raise the vehicle. (Refer to LUBRICATION & MAINTENANCE/HOISTING - STANDARD PROCEDURE)

NOTE: Perform the following steps on each rear drum brake assembly.

(3) Remove the tire and wheel assembly from the vehicle.

(4) Remove the brake drum retaining clips (if equipped) (Fig. 35).

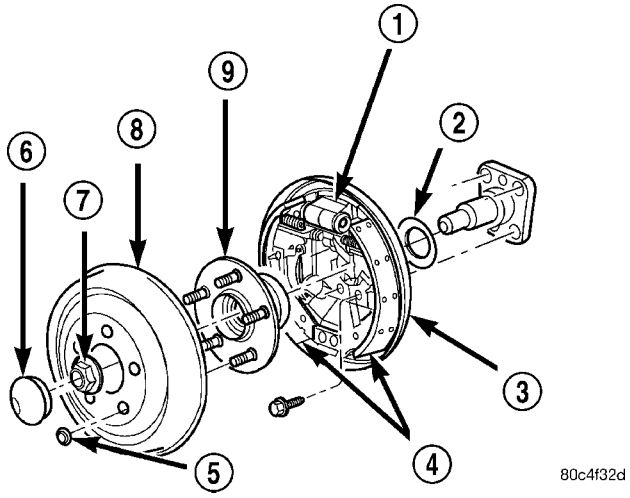

Fig. 35 Drum Brakes

1 - WHEEL CYLINDER
2 - SEAL
3 - SUPPORT PLATE
4 - BRAKE SHOES
5 - RETAINER CLIP
6 - DUST CAP
7 - NUT
8 - DRUM
9 - HUB AND BEARING

(5) Remove the brake drum (Fig. 35).

(6) Using a brake shoe gauge, Special Tool C-3919 or equivalent, measure the inside diameter of the brake drum (Fig. 36). Tighten the gauge set-screw at this measurement.

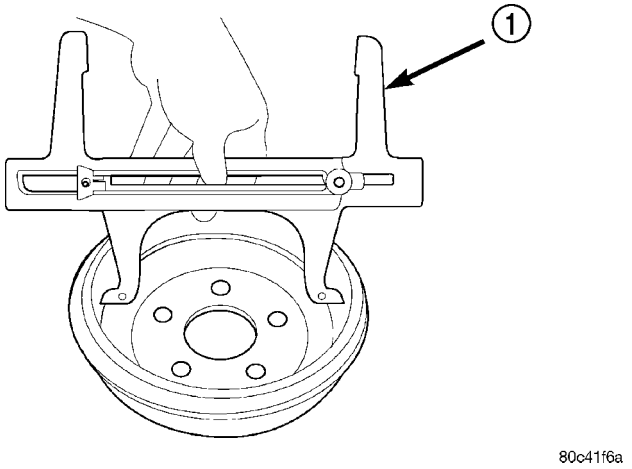

Fig. 36 Brake Drum Measurement

1 - BRAKE SHOE GAUGE

(7) Place the other side of the brake shoe gauge on the brake shoes as shown (Fig. 37).

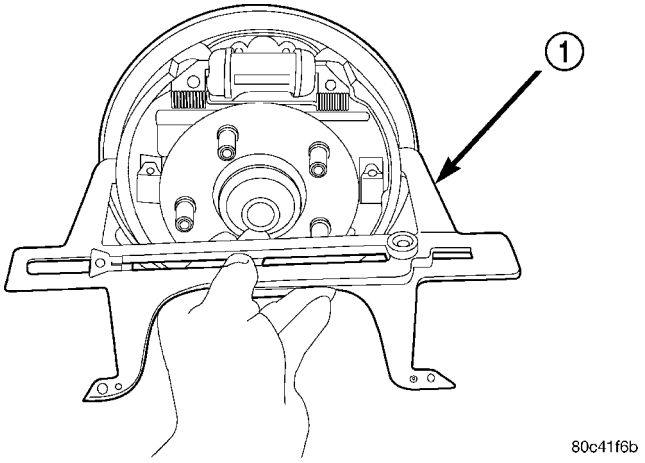

Fig. 37 Brake Shoe Measurement

1 - BRAKE SHOE GAUGE

NOTE: If a new brake drum is being installed, the gauge diameter should read approximately 219.21 mm - 219.67 mm (8.63 in. - 8.65 in.).

(8) Adjust the shoe diameter to the setting on the gauge. To adjust the shoe diameter, turn the adjuster-screw star-wheel using a screwdriver inserted through the adjusting hole in the rear of the shoe support plate. Once the tip of the screwdriver contacts the star-wheel teeth, move the handle of tool downward using the support plate as a pivot to adjust the shoes outward.

BRAKE PADS/SHOES - REAR DRUM (Continued)

(9) Once the shoe diameter is set, reinstall the brake drum.

(10) Turn the drum. A slight drag should be felt while rotating the drum.

(11) Install the tire and wheel assembly. Tighten the wheel mounting nuts to a torque of 135 N·m (100 ft. lbs.).

(12) After adjusting both rear drum brakes, lower the vehicle.

(13) Apply and release the parking brake lever one time after the adjustment process is completed so the parking brakes can readjust themselves to the new brake shoe adjustment.

DISC BRAKE CALIPER - FRONT

REMOVAL

NOTE: Before proceeding, (Refer to 5 - BRAKES - WARNING)(Refer to 5 - BRAKES - CAUTION).

(1) Using a brake pedal holding tool as shown (Fig. 38), depress the brake pedal past its first one inch of travel and hold it in this position. This will isolate the master cylinder from the brake hydraulic system and will not allow the brake fluid to drain out of the master cylinder reservoir when the lines are opened.

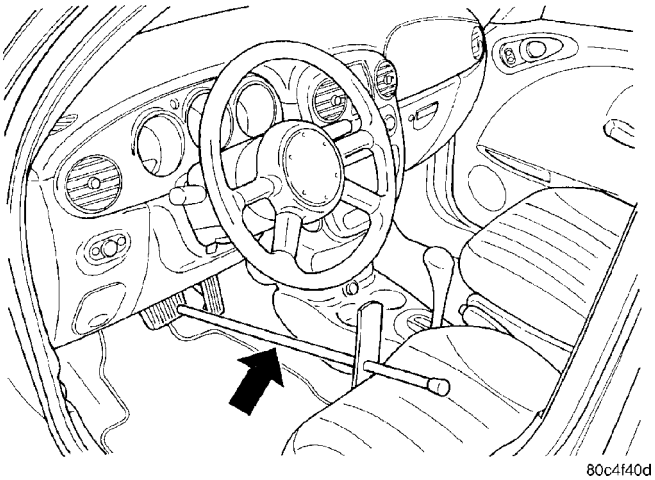

Fig. 38 Brake Pedal Holding Tool

(2) Raise the vehicle. (Refer to LUBRICATION & MAINTENANCE/HOISTING - STANDARD PROCEDURE)

(3) Remove the front tire and wheel assembly.

(4) Remove the banjo bolt connecting the brake hose to the brake caliper (Fig. 39). There are two washers (one on each side of the flex hose fitting) that will come off with the banjo bolt. Discard the washers.

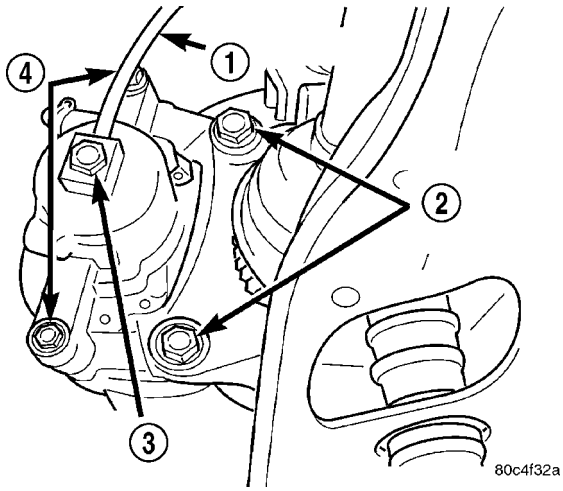

Fig. 39 Brake Caliper Mounting (Typical)

1 - BRAKE HOSE
2 - ADAPTER MOUNTING BOLTS
3 - BANJO BOLT
4 - CALIPER GUIDE PIN BOLTS

(5) Remove the two brake caliper guide pin bolts (Fig. 39).

(6) Remove the disc brake caliper from the disc brake adapter.

DISASSEMBLY

NOTE: Before disassembling the brake caliper, remove it from the vehicle. (Refer to 5 - BRAKES/HYDRAULIC/MECHANICAL/DISC BRAKE CALIPER - REMOVAL)

NOTE: Before disassembling the brake caliper, clean and inspect it. (Refer to 5 - BRAKES/HYDRAULIC/MECHANICAL/DISC BRAKE CALIPER - CLEANING)(Refer to 5 - BRAKES/HYDRAULIC/MECHANICAL/DISC BRAKE CALIPER - INSPECTION)

WARNING: UNDER NO CONDITION SHOULD HIGH PRESSURE AIR EVER BE USED TO REMOVE A PISTON FROM A CALIPER BORE. PERSONAL INJURY COULD RESULT FROM SUCH A PRACTICE.

CAUTION: Do not use excessive force when clamping caliper in vise. Excessive vise pressure will cause bore distortion.

(1) Mount the caliper in a vise equipped with protective jaws.

(2) Place a wooden block in the caliper as shown (Fig. 40).

DISC BRAKE CALIPER - FRONT (Continued)

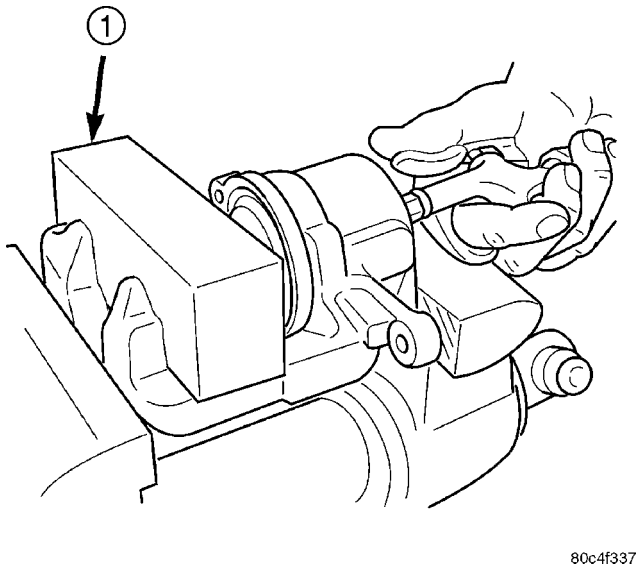

Fig. 40 Piston Removal

1 - WOOD BLOCK

WARNING: DO NOT PLACE FACE OR HANDS NEAR CALIPER AND PISTON IF USING COMPRESSED AIR PRESSURE TO REMOVE PISTON. DO NOT USE HIGH PRESSURE.

(3) If necessary, apply low pressure compressed air to the caliper fluid inlet in short spurts to force the piston out.

(4) Remove the piston from the caliper.

(5) Remove the dust boot from the piston and discard it.

CAUTION: Do not use a screw driver or other metal tool for seal removal. Using such tools can scratch the bore or leave burrs on the seal groove edges.

(6) Using a soft tool such as a plastic trim stick, work the piston seal out of its groove in caliper piston bore (Fig. 41). Discard the old seal.

(7) Clean the piston bore and drilled passage ways with alcohol or a suitable solvent. Wipe it dry using only a lint-free cloth.

(8) Inspect both the piston and bore for scoring or pitting. Bores that show light scratches or corrosion can usually be cleared of the light scratches or corrosion using crocus cloth.

CLEANING - DISC BRAKE CALIPER

WARNING: DUST AND DIRT ACCUMULATING ON BRAKE PARTS DURING NORMAL USE MAY CONTAIN ASBESTOS FIBERS FROM PRODUCTION OR AFTERMARKET BRAKE LININGS. BREATHING EXCESSIVE CONCENTRATIONS OF ASBESTOS FIBERS CAN CAUSE SERIOUS BODILY HARM. EXERCISE CARE WHEN SERVICING BRAKE PARTS. DO NOT SAND OR GRIND BRAKE LINING UNLESS EQUIPMENT USED IS DESIGNED TO CONTAIN THE DUST RESIDUE. DO NOT CLEAN BRAKE PARTS WITH COMPRESSED AIR OR BY DRY BRUSHING. CLEANING SHOULD BE DONE BY DAMPENING THE BRAKE COMPONENTS WITH A FINE MIST OF WATER, THEN WIPING THE BRAKE COMPONENTS CLEAN WITH A DAMPENED CLOTH. DISPOSE OF CLOTH AND ALL RESIDUE CONTAINING ASBESTOS FIBERS IN AN IMPERMEABLE CONTAINER WITH THE APPROPRIATE LABEL. FOLLOW PRACTICES PRESCRIBED BY THE OCCUPATIONAL SAFETY AND HEALTH ADMINISTRATION (OSHA) AND THE ENVIRONMENTAL PROTECTION AGENCY (EPA) FOR THE HANDLING, PROCESSING, AND DISPOSING OF DUST OR DEBRIS THAT MAY CONTAIN ASBESTOS FIBERS.

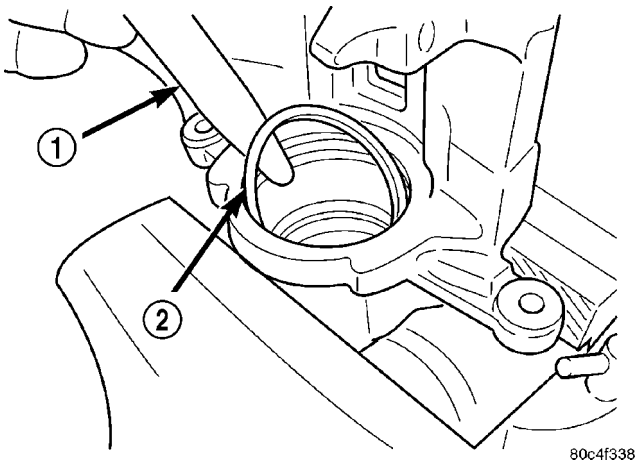

Fig. 41 Piston Seal Removal

1 - TRIM STICK
2 - SEAL

To clean or flush the internal passages of the brake caliper, use fresh brake fluid or Mopar® Non-Chlorinated Brake Parts Cleaner. Never use gasoline, kerosene, alcohol, oil, transmission fluid or any fluid containing mineral oil to clean the caliper. These fluids will damage rubber cups and seals.

INSPECTION - DISC BRAKE CALIPER

Inspect the disc brake caliper for the following:

- Brake fluid leaks in and around piston boot area
- Ruptures, brittleness or damage to the piston dust boot

If caliper fails inspection, disassemble and recondition caliper, replacing the seals and dust boots.

ASSEMBLY

NOTE: Always use new, clean Mopar® DOT 3 brake fluid when assembling the brake caliper.

DISC BRAKE CALIPER - FRONT (Continued)

NOTE: Never use an old piston seal.

(1) Dip the new piston seal in clean brake fluid and install it in the groove of the caliper bore (Fig. 42). The seal should be started at one area of the groove and gently worked around into the groove using only your clean fingers to seat it.

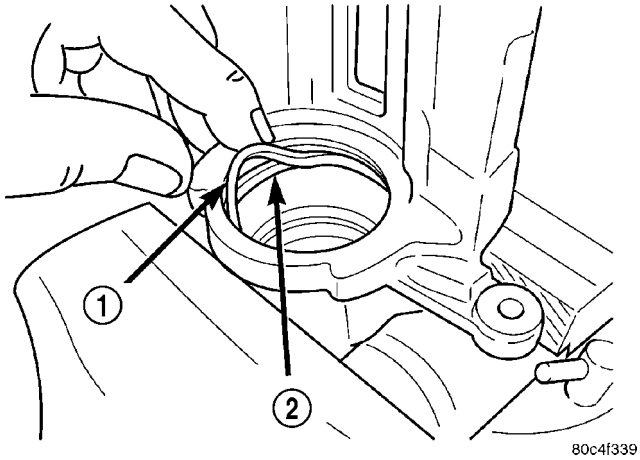

Fig. 42 New Piston Seal Installation

1 - SEAL
2 - GROOVE

(2) Coat the new piston with clean brake fluid.

(3) Coat the new piston boot with clean brake fluid leaving a generous amount inside the boot.

(4) Position the dust boot over the lower section of the piston (Fig. 43).

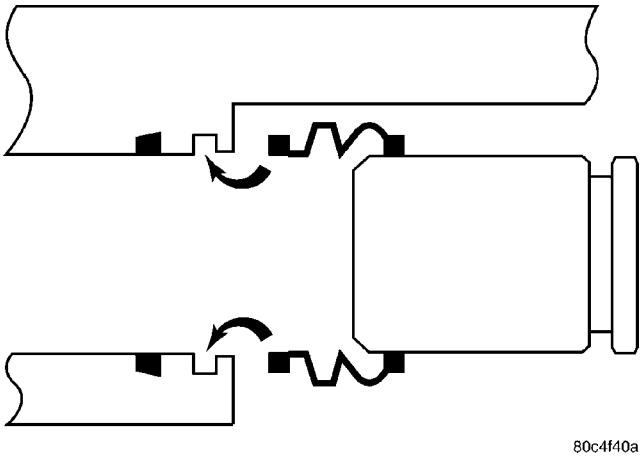

Fig. 43 Boot Installation

(5) Extend the dust boot below the bottom of the piston and guide the lip seal into the groove in the caliper piston bore.

CAUTION: Force applied to the piston to seat it in the bore must be applied uniformly to avoid cocking and binding of the piston.

(6) Install the piston into the bore carefully pushing it past the piston seal using hand pressure (Fig. 44). Push the piston in until it bottoms in the caliper bore and the dust boot lip seal falls into the groove near the top of the piston.

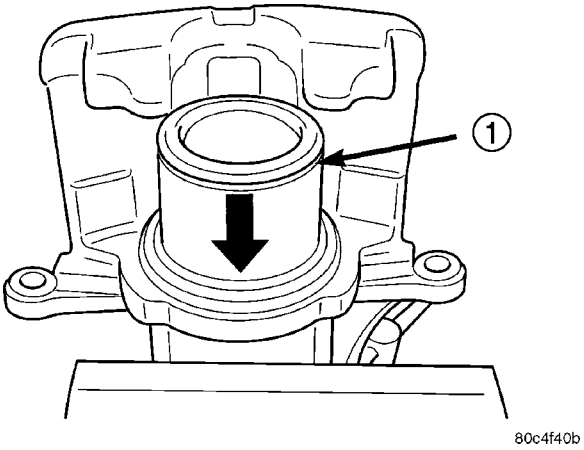

Fig. 44 Piston Installation

1 - PISTON GROOVE

(7) Reinstall the caliper on the vehicle and bleed the brakes as necessary. (Refer to 5 - BRAKES/HYDRAULIC/MECHANICAL/DISC BRAKE CALIPER - INSTALLATION)

INSTALLATION

CAUTION: When installing new brake components, be sure to use correct parts. Parts designed for BR4 Performance Brake System must not be mixed with other brake systems. These parts, similar in appearance, can be easily identified (Fig. 11) (Fig. 12).(Refer to 5 - BRAKES/HYDRAULIC/MECHANICAL - DESCRIPTION - DISC BRAKES (FRONT))

(1) Completely retract the caliper piston back into the bore of the caliper. Use a C-clamp to retract the piston. Place a wood block over the piston before installing the C-clamp to avoid damaging the piston.

CAUTION: Use care when installing the caliper onto the disc brake adapter to avoid damaging the boots on the caliper guide pins.

(2) Install the disc brake caliper over the brake shoes on the brake caliper adapter. Make sure the springs on the shoes do not get caught in the hole formed into the center of the caliper housing.

(3) Align the caliper guide pin bolt holes with the guide pins. Install the caliper guide pin bolts and tighten them to a torque of 35 N·m (26 ft. lbs.) (Fig. 39).

DISC BRAKE CALIPER - FRONT (Continued)

(4) Install the banjo bolt connecting the brake hose to the brake caliper (Fig. 39). Install NEW washers on each side of the hose fitting as the banjo bolt is guided through the fitting. Thread the banjo bolt into the caliper and tighten it to a torque of 24 N·m (210 in. lbs.).

(5) Install the tire and wheel assembly. Tighten the wheel mounting nuts to a torque of 135 N·m (100 ft. lbs.).

(6) Lower the vehicle.

(7) Remove the brake pedal holding tool.

(8) Bleed the caliper as necessary. (Refer to 5 - BRAKES - STANDARD PROCEDURE)

(9) Road test the vehicle and make several stops to wear off any foreign material on the brakes and to seat the brake shoes.

DISC BRAKE CALIPER - REAR

REMOVAL

NOTE: Before proceeding, (Refer to 5 - BRAKES - WARNING)(Refer to 5 - BRAKES - CAUTION).

(1) Using a brake pedal holding tool as shown (Fig. 45), depress the brake pedal past its first one inch of travel and hold it in this position. This will isolate the master cylinder from the brake hydraulic system and will not allow the brake fluid to drain out of the master cylinder reservoir while the lines are disconnected.

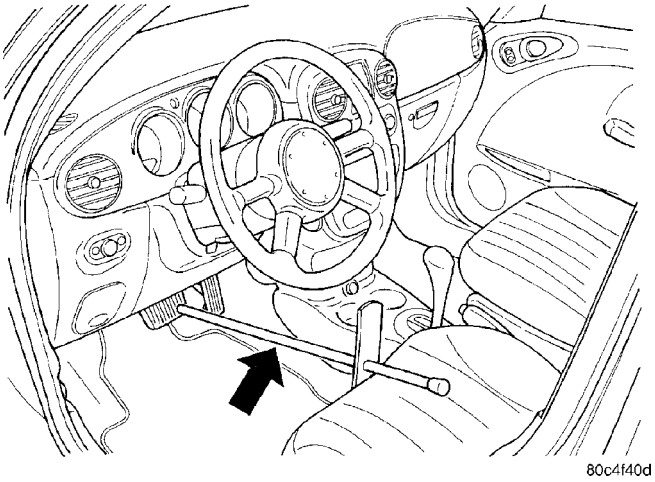

Fig. 45 Brake Pedal Holding Tool

(2) Raise the vehicle. (Refer to LUBRICATION & MAINTENANCE/HOISTING - STANDARD PROCEDURE)

(3) Remove the rear tire and wheel assembly.

(4) Remove the banjo bolt connecting the brake hose to the brake caliper (Fig. 46). There are two washers (one on each side of the flex hose fitting) that will come off with the banjo bolt. Discard the washers.

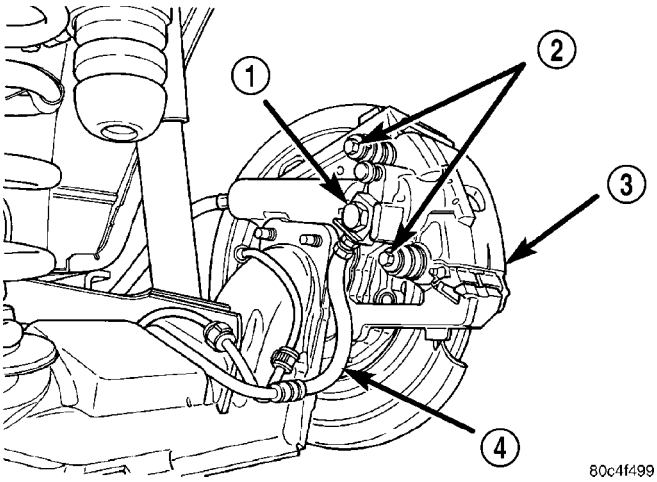

Fig. 46 Brake Hose Mounting

1 - BANJO BOLT
2 - GUIDE PIN BOLTS
3 - CALIPER
4 - BRAKE HOSE

NOTE: In some cases, it may be necessary to retract the caliper piston in its bore a small amount in order to provide sufficient clearance between the shoes and the rotor to easily remove the caliper from the knuckle. This can usually be accomplished before the guide pin bolts are removed, by grasping the rear of the caliper and pulling outward working with the guide pins, thus retracting the piston. Never push on the piston directly as it may get damaged.

(5) Remove the two caliper guide pin bolts (Fig. 47).

(6) Remove the caliper assembly from the brake adapter by first rotating the top of the caliper away from the rotor, and then lifting the caliper assembly off the machined abutment on the adapter (Fig. 48).

DISC BRAKE CALIPER - REAR (Continued)

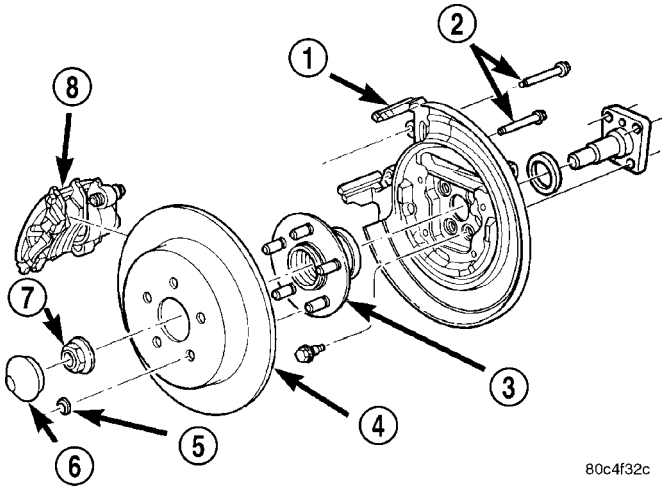

Fig. 47 Caliper Mounting

1 - DISC BRAKE ADAPTER
2 - GUIDE PIN BOLTS
3 - HUB AND BEARING
4 - BRAKE ROTOR
5 - RETAINER CLIP
6 - DUST CAP
7 - NUT
8 - DISC BRAKE CALIPER

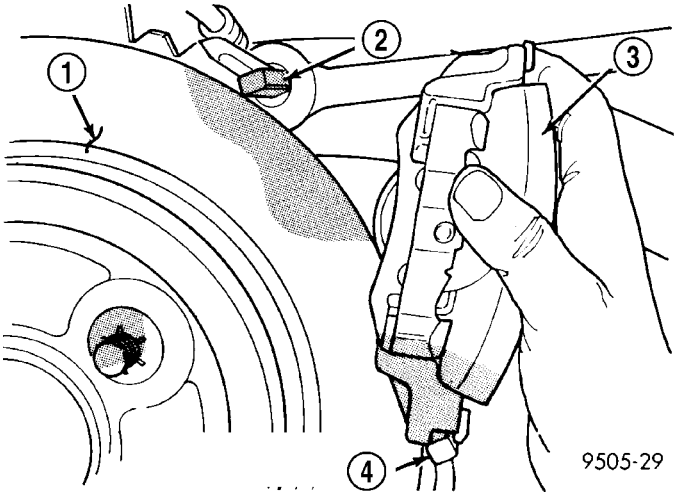

Fig. 48 Removing Caliper From Adapter

1 - BRAKING DISC
2 - CALIPER ADAPTER
3 - CALIPER
4 - LOWER MACHINED ADAPTER ABUTMENT

DISASSEMBLY

DISASSEMBLY - DISC BRAKE CALIPER (GUIDE PIN BUSHINGS)

Before disassembling the brake caliper, clean and inspect it. (Refer to 5 - BRAKES/HYDRAULIC/MECHANICAL/DISC BRAKE CALIPERS - INSPECTION).

(1) With one hand, push the guide pin bushing sleeve towards the back of the caliper, and at the same time, pull the sleeve out the back of the caliper and bushing (Fig. 49).

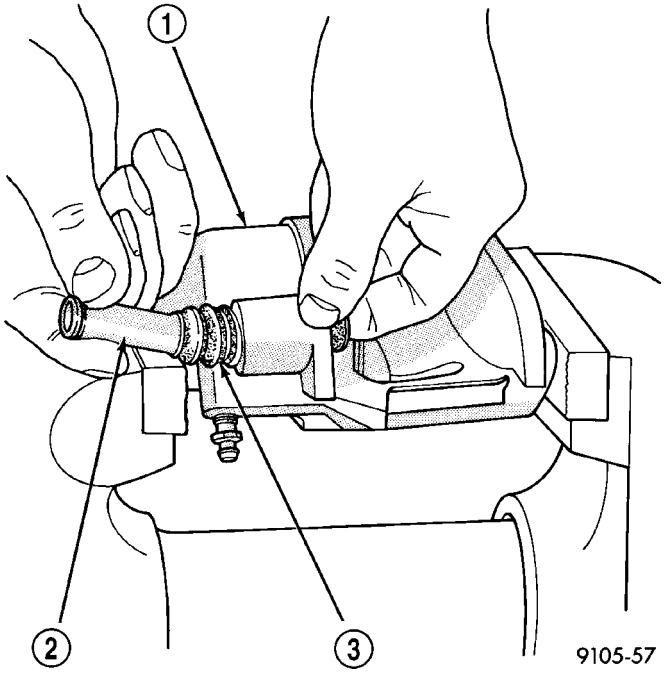

Fig. 49 Removing Sleeve From Bushing

1 - CALIPER
2 - SLEEVE
3 - BUSHING

(2) Using your fingers, collapse one side of the rubber guide pin bushing. Pull the guide pin bushing out the other side of the brake caliper mounting boss (Fig. 50).

DISASSEMBLY - DISC BRAKE CALIPER (PISTON AND SEAL)

Before disassembling the brake caliper, clean and inspect it. (Refer to 5 - BRAKES/HYDRAULIC/MECHANICAL/DISC BRAKE CALIPERS - INSPECTION).

CALIPER PISTON REMOVAL

WARNING: UNDER NO CONDITION SHOULD HIGH PRESSURE AIR EVER BE USED TO REMOVE A PISTON FROM A CALIPER BORE. PERSONAL INJURY COULD RESULT FROM SUCH A PRACTICE.

NOTE: The safest way to remove the piston from the caliper bore is to use the hydraulic pressure of the vehicle's brake system.

DISC BRAKE CALIPER - REAR (Continued)

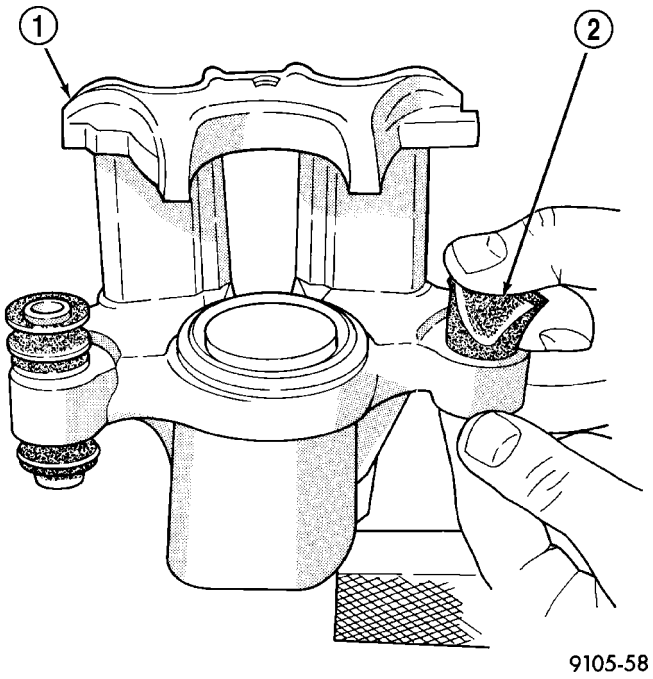

Fig. 50 Removing Bushing From Caliper

1 - CALIPER
2 - BUSHING

(1) Following the removal procedure in DISC BRAKE SHOES (Refer to 5 - BRAKES/HYDRAULIC/MECHANICAL/BRAKE PADS/SHOES - REMOVAL), remove the caliper from the brake rotor and hang the assembly on a wire hook away from rotor and body of the vehicle so brake fluid cannot get on these components. Remove the brake shoes, and place a small piece of wood between the piston and caliper fingers.

(2) Carefully depress the brake pedal to hydraulically push piston out of its bore. Once completed, apply and hold down the brake pedal to any position beyond the first inch of pedal travel using a brake pedal holding tool. This will prevent the fluid in the master cylinder reservoir from completely draining out.

(3) Disconnect the brake fluid flex hose from the caliper assembly and remove it from the vehicle.

CALIPER SEAL REMOVAL

CAUTION: Do not use excessive force when clamping caliper in vise. Excessive vise pressure will cause bore distortion.

(1) To disassemble the caliper, mount it in a vise equipped with protective jaws.

(2) Remove the piston dust boot from the caliper and discard (Fig. 51).

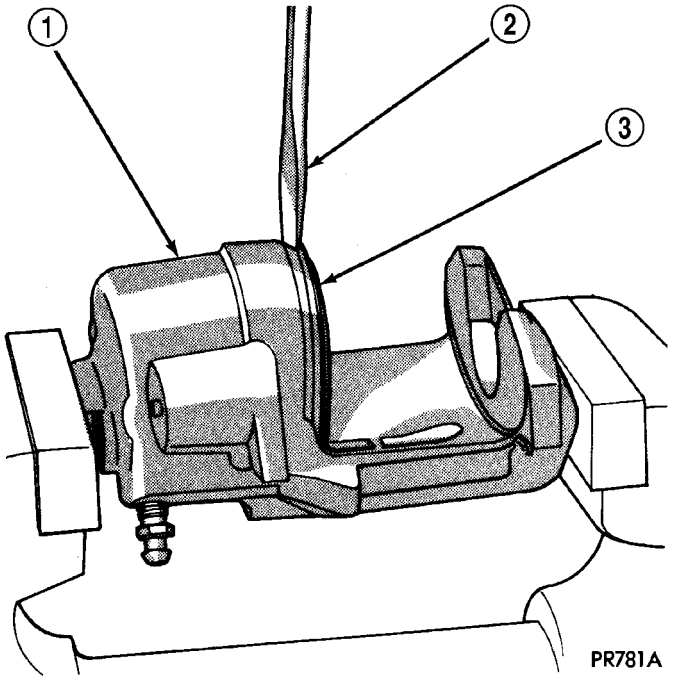

Fig. 51 Removing Caliper/Piston Dust Boot

1 - CALIPER
2 - SCREWDRIVER
3 - BOOT

NOTE: Do not use a screw driver or other metal tool for seal removal. Using such tools can scratch the bore or leave burrs on the seal groove edges.

(3) Using a soft tool such as a plastic trim stick, work the piston seal out of its groove in caliper piston bore (Fig. 52). Discard the old seal.

(4) Clean the piston bore and drilled passage ways using alcohol or a suitable solvent. Wipe it dry using only a lint-free cloth.

(5) Inspect the piston bore for scoring or pitting. Bores that show light scratches or corrosion can usually be cleared of the light scratches or corrosion using crocus cloth. Bores that have deep scratches or scoring should be honed. Use Caliper Hone, Special Tool C-4095, or the equivalent to hone the bore. Do not over-hone the bore. Don not increase the diameter of the bore more than 0.0254 mm (0.001 inch) (Fig. 53). If the bore does not clean up within this specification, a new caliper housing should be installed.

NOTE: During the honing procedure, coat the stones and bore with brake fluid. After honing the bore, carefully clean the seal and boot grooves with a stiff non-metallic rotary brush. Use extreme care in cleaning the caliper after honing. Remove all dirt and grit by flushing the caliper bore with fresh clean brake fluid; wipe it dry with a clean, lint free cloth and then clean it a second time.

DISC BRAKE CALIPER - REAR (Continued)

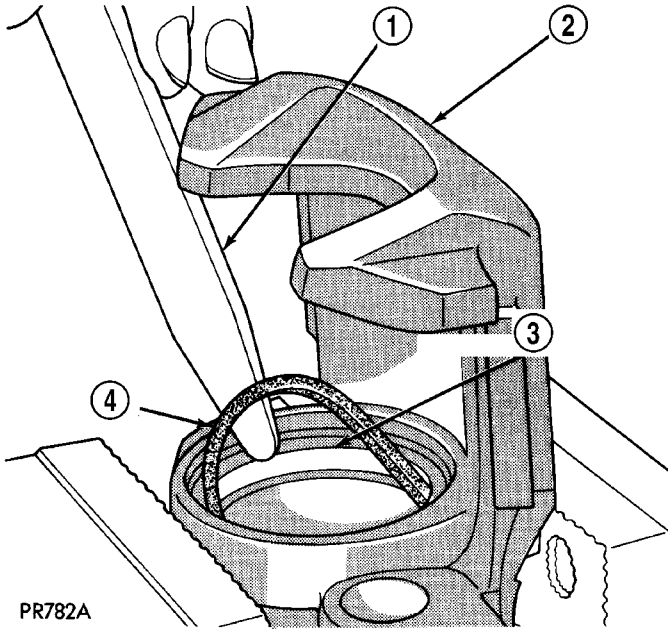

Fig. 52 Removing Piston Seal

1 - PLASTIC TRIM STICK
2 - CALIPER
3 - PISTON SEAL GROOVE
4 - PISTON SEAL

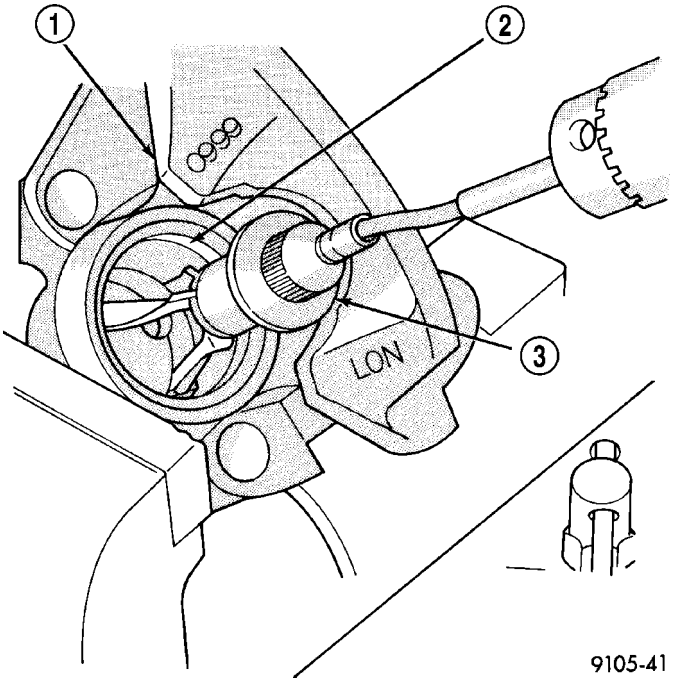

Fig. 53 Honing Brake Caliper Piston Bore

1 - CALIPER
2 - CALIPER BORE
3 - SPECIAL TOOL C-4095

(6) Inspect the caliper piston for pitting, scratches, or any physical damage. Replace the piston if there is evidence of scratches, pitting or physical damage.

CLEANING - DISC BRAKE CALIPER

WARNING: DUST AND DIRT ACCUMULATING ON BRAKE PARTS DURING NORMAL USE MAY CONTAIN ASBESTOS FIBERS FROM PRODUCTION OR AFTERMARKET BRAKE LININGS. BREATHING EXCESSIVE CONCENTRATIONS OF ASBESTOS FIBERS CAN CAUSE SERIOUS BODILY HARM. EXERCISE CARE WHEN SERVICING BRAKE PARTS. DO NOT SAND OR GRIND BRAKE LINING UNLESS EQUIPMENT USED IS DESIGNED TO CONTAIN THE DUST RESIDUE. DO NOT CLEAN BRAKE PARTS WITH COMPRESSED AIR OR BY DRY BRUSHING. CLEANING SHOULD BE DONE BY DAMPENING THE BRAKE COMPONENTS WITH A FINE MIST OF WATER, THEN WIPING THE BRAKE COMPONENTS CLEAN WITH A DAMPENED CLOTH. DISPOSE OF CLOTH AND ALL RESIDUE CONTAINING ASBESTOS FIBERS IN AN IMPERMEABLE CONTAINER WITH THE APPROPRIATE LABEL. FOLLOW PRACTICES PRESCRIBED BY THE OCCUPATIONAL SAFETY AND HEALTH ADMINISTRATION (OSHA) AND THE ENVIRONMENTAL PROTECTION AGENCY (EPA) FOR THE HANDLING, PROCESSING, AND DISPOSING OF DUST OR DEBRIS THAT MAY CONTAIN ASBESTOS FIBERS.

To clean or flush the internal passages of the brake caliper, use fresh brake fluid or Mopar® Non-Chlorinated Brake Parts Cleaner. Never use gasoline, kerosene, alcohol, oil, transmission fluid or any fluid containing mineral oil to clean the caliper. These fluids will damage rubber cups and seals.

INSPECTION - DISC BRAKE CALIPER

Inspect the disc brake caliper for the following:

- Brake fluid leaks in and around boot area and inboard lining
- Ruptures, brittleness or damage to the piston dust boot
- Damaged, dry or brittle guide pin dust boots

If caliper fails inspection, disassemble and recondition caliper, replacing the seals and dust boots.

ASSEMBLY

ASSEMBLY - DISC BRAKE CALIPER (GUIDE PIN BUSHINGS)

(1) Fold the guide pin bushing in half lengthwise at the solid middle section (Fig. 54).

NOTE: To avoid damage to the bushing, do not use a sharp object to install the guide pin bushing.

(2) Insert the folded bushing into the caliper mounting boss using your fingers (Fig. 55).

DISC BRAKE CALIPER - REAR (Continued)

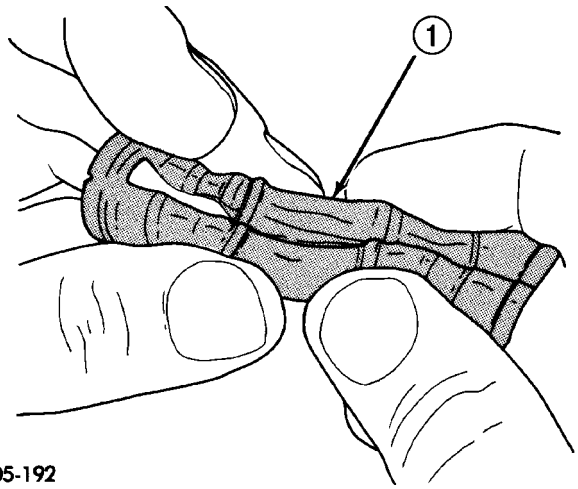

Fig. 54 Folded Caliper Guide Pin Bushing

1 - CALIPER GUIDE PIN BUSHING

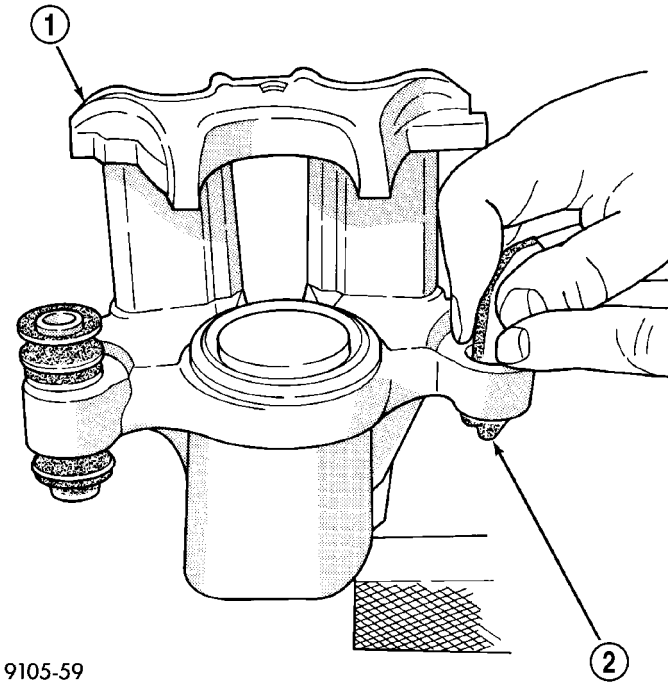

Fig. 55 Installing Caliper Guide Pin Bushing

1 - CALIPER
2 - BUSHING

(3) Unfold the bushing using your fingers or a wooden dowel until the bushing is fully seated into the caliper housing. The bushing flanges should be seated evenly on both sides of the bushing hole (Fig. 56).

(4) Lubricate the inside surfaces of the bushing using Mopar Dielectric Grease or an equivalent.

(5) Install the guide pin sleeve into one end of bushing until the seal area of bushing is past the seal groove in the sleeve (Fig. 57).

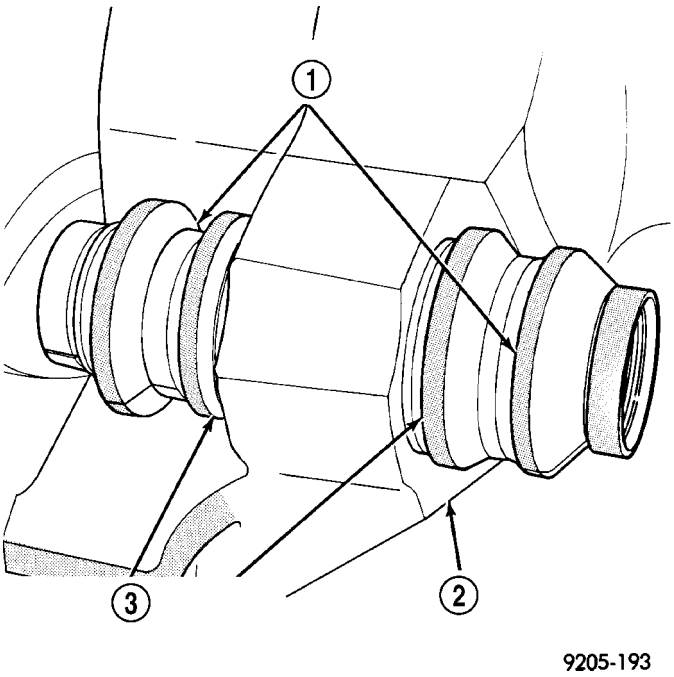

Fig. 56 Bushing Correctly Installed In Caliper

1 - BUSHING
2 - CALIPER
3 - BE SURE BOTH BUSHING FLANGES ARE FULLY SEATED AROUND CALIPER BUSHING BORES.

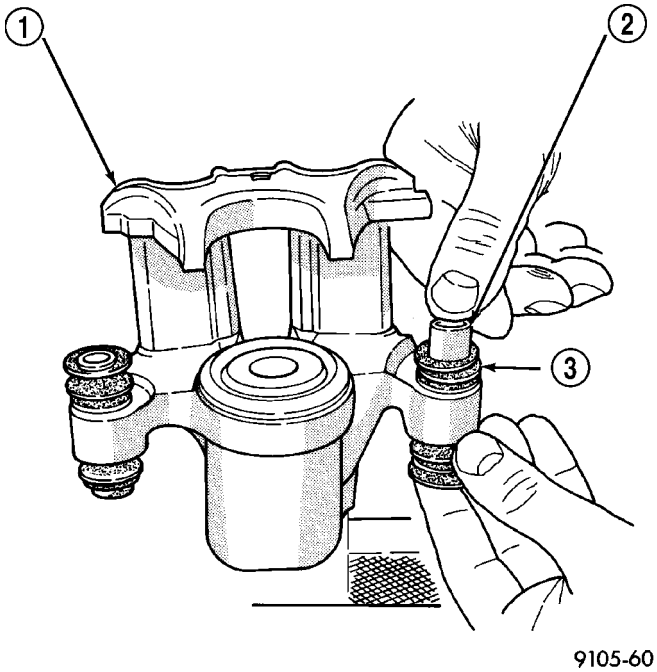

Fig. 57 Installing Sleeve In Bushing

1 - CALIPER
2 - SLEEVE
3 - BUSHING

DISC BRAKE CALIPER - REAR (Continued)

(6) Holding the convoluted boot on the opposite end of the bushing, push the steel sleeve through the bushing until the bushing boot is fully seated into the seal groove on that end of sleeve (Fig. 57). Install the other end bushing boot into the groove on that end of the bushing sleeve.

(7) Verify both ends of the bushing are seated in the sleeve groves (Fig. 58). When the sleeve is seated properly into the bushing, the sleeve/bushing can be held between your fingers and easily slid back and forth without the bushing unseating from the sleeve groove.

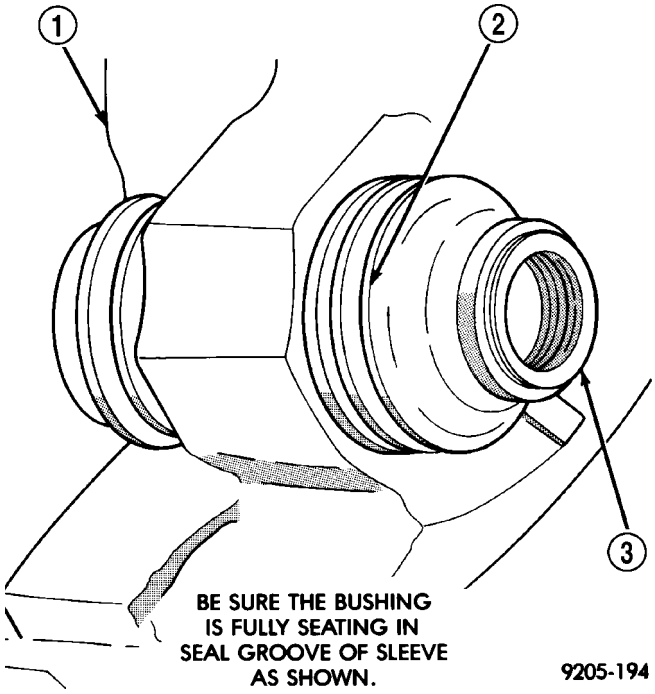

Fig. 58 Correctly Installed Guide Pin Sleeve And Bushing

1 - CALIPER
2 - BUSHING
3 - SLEEVE

ASSEMBLY - DISC BRAKE CALIPER (PISTON AND SEAL)

NOTE: Never use an old piston seal.

(1) Dip the new piston seal in clean brake fluid and install it in the groove of the caliper bore. The seal should be started at one area of the groove and gently worked around and into the groove (Fig. 59) using only your clean fingers to seat it.

(2) Coat the new piston boot with clean brake fluid leaving a generous amount inside the boot.

(3) Position the dust boot over the piston after coating it with brake fluid.

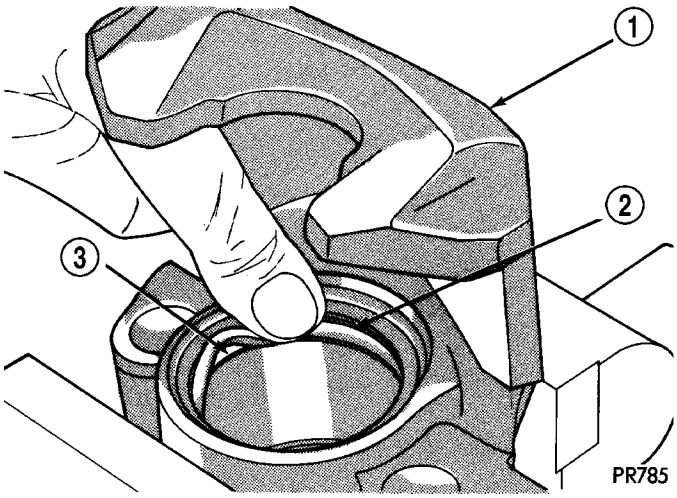

Fig. 59 Installing New Piston Seal

1 - CALIPER
2 - PISTON SEAL
3 - SEAL GROOVE

CAUTION: Force applied to the piston to seat it in the bore must be applied uniformly to avoid cocking and binding of the piston.

(4) Install piston into caliper bore pushing it past the piston seal until it bottoms in the caliper bore (Fig. 60).

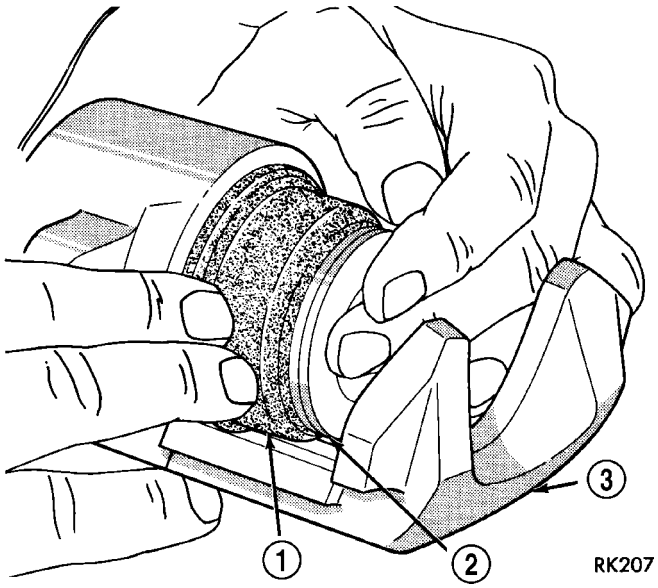

Fig. 60 Installing Piston Into Caliper Bore

1 - BOOT
2 - PISTON
3 - CALIPER

(5) Position the dust boot into the counterbore of the caliper assembly piston bore.

DISC BRAKE CALIPER - REAR (Continued)

(6) Using a hammer and Installer, Special Tool C-4689, and Handle, Special Tool C-4171, drive the boot into the counterbore of the caliper (Fig. 61).

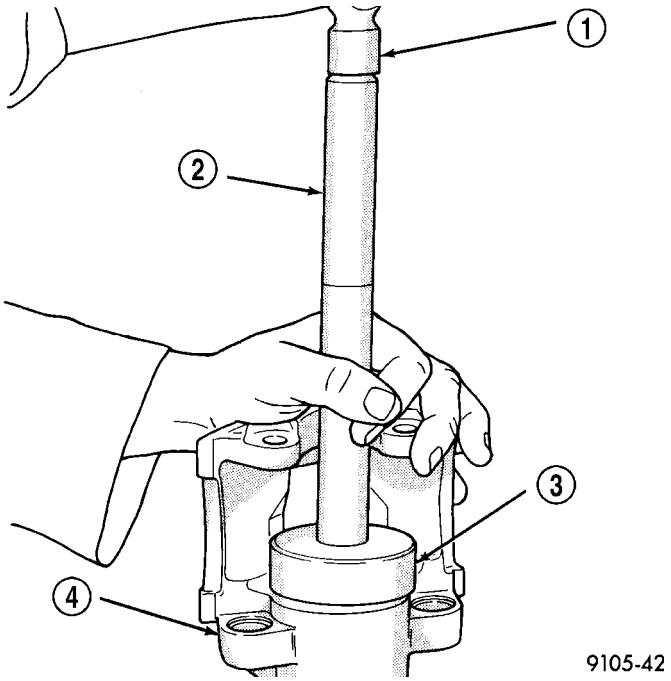

Fig. 61 Installing Dust Boot In Caliper Counterbore

1 - HAMMER
2 - SPECIAL TOOL C-4171
3 - SPECIAL TOOL C-4689
4 - CALIPER

(7) Install the brake shoes (Refer to 5 - BRAKES/HYDRAULIC/MECHANICAL/BRAKE PADS/SHOES - INSTALLATION).

(8) Reinstall the caliper on the vehicle and bleed the brakes as necessary. (Refer to 5 - BRAKES/HYDRAULIC/MECHANICAL/DISC BRAKE CALIPERS - INSTALLATION).

INSTALLATION

CAUTION: When installing new brake components, be sure to use correct parts. Parts designed for BR4 Performance Brake System must not be mixed with other brake systems. These parts, similar in appearance, can be easily identified (Fig. 14) (Fig. 15).(Refer to 5 - BRAKES/HYDRAULIC/MECHANICAL - DESCRIPTION - DISC BRAKES (REAR))

NOTE: Step (1) below is only required when installing the disc brake caliper after new brake shoes have been installed.

(1) Completely retract the caliper piston back into piston bore of the caliper.

(2) Lubricate both adapter caliper slide abutments with a liberal amount of Mopar® Multipurpose Lubricant, or an equivalent.

CAUTION: Use care when installing the caliper assembly onto adapter so the guide pin bushings and sleeves do not get damaged by the mounting bosses on adapter.

(3) Starting with the lower end, carefully lower the caliper and brake shoes over the brake rotor and catch the caliper's bottom edge behind the caliper slide abutment (Fig. 48). Rotate the top of the caliper into mounting position on the adapter.

CAUTION: Extreme caution should be taken not to cross thread the caliper guide pin bolts when they are installed.

(4) Carefully install the caliper guide pin bolts (Fig. 47), then tighten them to a torque of 22 N·m (192 in. lbs.).

(5) Install the banjo bolt connecting the brake hose to the brake caliper (Fig. 46). Install NEW washers. Place one fitting washer on each side of the hose fitting as the banjo bolt is guided through the fitting. Thread the banjo bolt into the caliper and tighten it to a torque of 24 N·m (210 in. lbs.).

(6) Install the tire and wheel assembly. Tighten the wheel mounting nuts to a torque of 135 N·m (100 ft. lbs.).

(7) Lower the vehicle.

(8) Remove the brake pedal holding tool.

(9) Bleed the caliper as necessary. (Refer to 5 - BRAKES - STANDARD PROCEDURE)

(10) Road test the vehicle and make several stops to wear off any foreign material on the brakes and to seat the brake shoes.

DISC BRAKE CALIPER ADAPTER - FRONT

REMOVAL

NOTE: Before proceeding, (Refer to 5 - BRAKES - WARNING)(Refer to 5 - BRAKES - CAUTION).

(1) Raise the vehicle. (Refer to LUBRICATION & MAINTENANCE/HOISTING - STANDARD PROCEDURE)

DISC BRAKE CALIPER ADAPTER - FRONT (Continued)

(2) Remove the front tire and wheel assembly.

(3) Remove the two brake caliper guide pin bolts (Fig. 62).

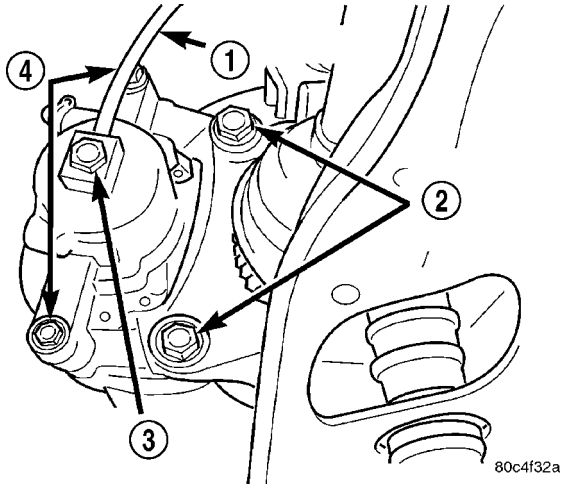

Fig. 62 Brake Caliper Mounting

1 - BRAKE HOSE
2 - ADAPTER MOUNTING BOLTS
3 - BANJO BOLT
4 - CALIPER GUIDE PIN BOLTS

(4) Remove the disc brake caliper from the adapter. Hang the caliper out of the way using wire or a bungee cord. Use care not to overextend the brake hose when doing this.

(5) Remove the brake shoes from the disc brake caliper adapter (Fig. 63).

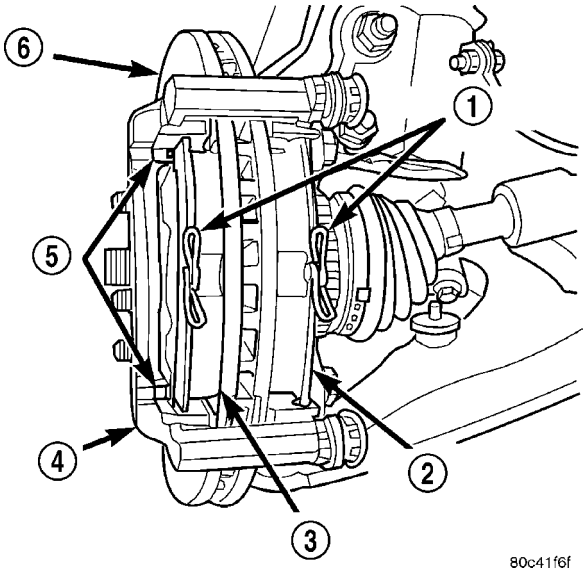

Fig. 63 Brake Shoes Mounted In Adapter

1 - SPRINGS
2 - INBOARD SHOE
3 - OUTBOARD SHOE
4 - DISC BRAKE ADAPTER
5 - ABUTMENT SHIMS
6 - BRAKE ROTOR

(6) Remove the abutment shims from the adapter (Fig. 63).

(7) Remove the two bolts securing the disc brake caliper adapter to the steering knuckle (Fig. 62).

(8) Remove the disc brake caliper adapter.

INSTALLATION

CAUTION: When installing new brake components, be sure to use correct parts. Parts designed for BR4 Performance Brake System must not be mixed with other brake systems. These parts, similar in appearance, can be easily identified (Fig. 11) (Fig. 12).(Refer to 5 - BRAKES/HYDRAULIC/MECHANICAL - DESCRIPTION - DISC BRAKES (FRONT))

(1) Install the disc brake caliper adapter on the steering knuckle.

(2) Install the two bolts securing the disc brake caliper adapter to the steering knuckle (Fig. 62). Tighten the bolts to a torque of 104 N·m (77 ft. lbs.).

(3) Attach the two abutment shims to the adapter fitting the contour of each shim to the adapter's contour (Fig. 63).

(4) Place the brake shoes in the abutment shims clipped into the disc brake caliper adapter as shown (Fig. 63). Place the shoe with the wear indicator attached on the inboard side.

CAUTION: Use care when installing the caliper onto the disc brake adapter to avoid damaging the boots on the caliper guide pins.

(5) Install the disc brake caliper over the brake shoes on the brake caliper adapter. Make sure the springs on the shoes do not get caught in the hole formed into the center of the caliper housing.

(6) Align the caliper guide pin bolt holes with the guide pins. Install the caliper guide pin bolts and tighten them to a torque of 35 N·m (26 ft. lbs.) (Fig. 62).

(7) Install the tire and wheel assembly. Tighten the wheel mounting nuts to a torque of 135 N·m (100 ft. lbs.).

(8) Lower the vehicle.

(9) Road test the vehicle and make several stops to wear off any foreign material on the brakes and to seat the brake shoes.

DISC BRAKE CALIPER GUIDE PINS

REMOVAL

NOTE: Before proceeding, (Refer to 5 - BRAKES - WARNING)(Refer to 5 - BRAKES - CAUTION).

DISC BRAKE CALIPER GUIDE PINS (Continued)

(1) Raise the vehicle. (Refer to LUBRICATION & MAINTENANCE/HOISTING - STANDARD PROCEDURE)

(2) Remove the front tire and wheel assembly.

(3) Remove the two brake caliper guide pin bolts (Fig. 64).

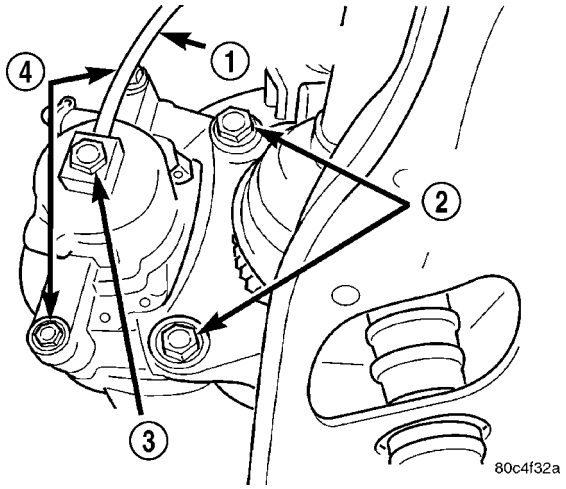

Fig. 64 Brake Caliper Mounting

1 - BRAKE HOSE
2 - ADAPTER MOUNTING BOLTS
3 - BANJO BOLT
4 - CALIPER GUIDE PIN BOLTS

(4) Remove the disc brake caliper from the disc brake caliper adapter and hang it out of the way using wire or a bungee cord. Use care not to overextend the brake hose when doing this.

(5) Remove the guide pins and boots from the adapter as shown (Fig. 65).

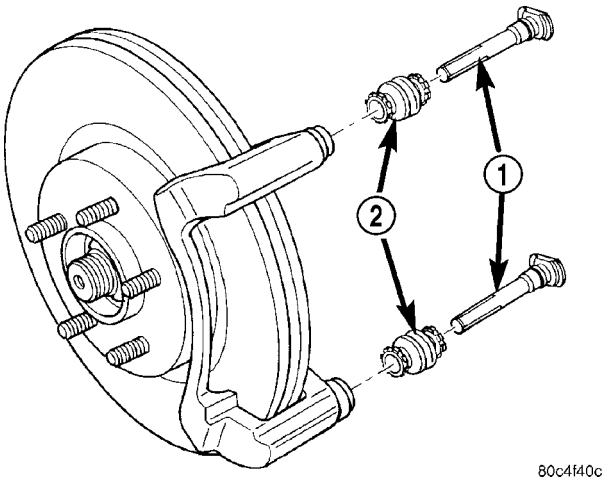

Fig. 65 Guide Pins And Boots

1 - PINS
2 - BOOTS

INSTALLATION

(1) Lubricate the guide pins and inside the boots with the packet supplied with the service kit, Sythesco GLK-1 lubricant or equivalent.

(2) Install the guide pins and boots in the adapter as shown (Fig. 65). The boots have grooves built into their inner lips to fit onto the pins and adapter.

CAUTION: Use care when installing the caliper onto the disc brake adapter to avoid damaging the boots on the caliper guide pins.

(3) Install the disc brake caliper over the brake shoes on the brake caliper adapter. Make sure the springs on the shoes do not get caught in the hole formed into the center of the caliper housing.

(4) Align the caliper guide pin bolt holes with the guide pins. Install the caliper guide pin bolts and tighten them to a torque of 35 N·m (26 ft. lbs.) (Fig. 64).

(5) Install the tire and wheel assembly. Tighten the wheel mounting nuts to a torque of 135 N·m (100 ft. lbs.).

(6) Lower the vehicle.

(7) Pump the brake pedal several times before moving the vehicle to set the shoes to the brake rotor.

DRUM

DIAGNOSIS AND TESTING - BRAKE DRUM

With the drum off the vehicle, measure the drum for diameter variation (oval shape). The diameter variation of the drum braking surface must not exceed either 0.0635 mm (0.0025 inch) in 30° or 0.0889 mm (0.0035 inch) in 360°.

Measure brake drum runout. Brake drum runout should be checked with the drum mounted on a brake lathe. Brake drum runout should not exceed 0.1524 mm (0.006 inch).

If either of these measurements are not within specification, reface or replace the drum. (Refer to 5 - BRAKES/HYDRAULIC/MECHANICAL/DRUM - STANDARD PROCEDURE).

Always replace the drum if machining will cause the diameter to exceed drum maximum diameter. All brake drums are marked with the maximum allowable brake drum diameter (Fig. 66).

STANDARD PROCEDURE - BRAKE DRUM MACHINING

If a brake drum is deeply scored or warped, it can be machined on a brake lathe equipped to machine brake drums. Follow the manufacturers instructions on the machining procedure.

DRUM (Continued)

Measure the brake drum diameter before machining. If machining the drum will cause the drum to exceed maximum allowable diameter, do not machine the brake drum. It needs to be replaced.

CAUTION: Do not machine the brake drum if it will cause the drum to exceed maximum allowable diameter.

All brake drums are marked with the maximum allowable brake drum diameter (Fig. 66).

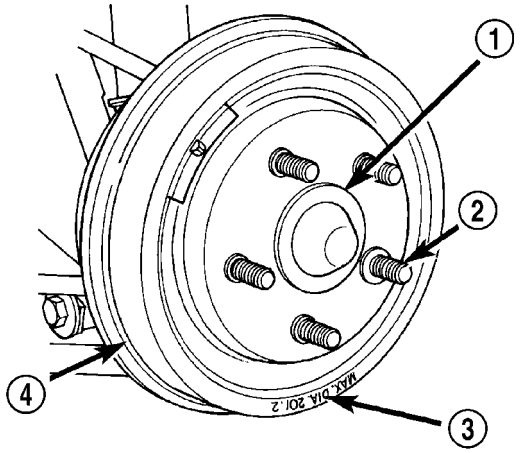

80aa4b6b

Fig. 66 Brake Drum Maximum Diameter Identification

1 - HUB/BEARING ASSEMBLY
2 - WHEEL MOUNTING STUDS
3 - BRAKE DRUM MAXIMUM DIAMETER MARKING
4 - REAR BRAKE DRUM

When machining, make sure the final finish feed cut is fine in order to avoid a screw effect on the brake shoes when the brakes are applied. This final feed cut specification varies from lathe manufacturer to lathe manufacturer.

REMOVAL

NOTE: Before proceeding, (Refer to 5 - BRAKES - WARNING)(Refer to 5 - BRAKES - CAUTION).

(1) Raise the vehicle. (Refer to LUBRICATION & MAINTENANCE/HOISTING - STANDARD PROCEDURE)

(2) Remove the rear tire and wheel assembly from the vehicle.

(3) Remove the brake drum retaining clips (if equipped) (Fig. 67).

(4) Remove the brake drum (Fig. 67).

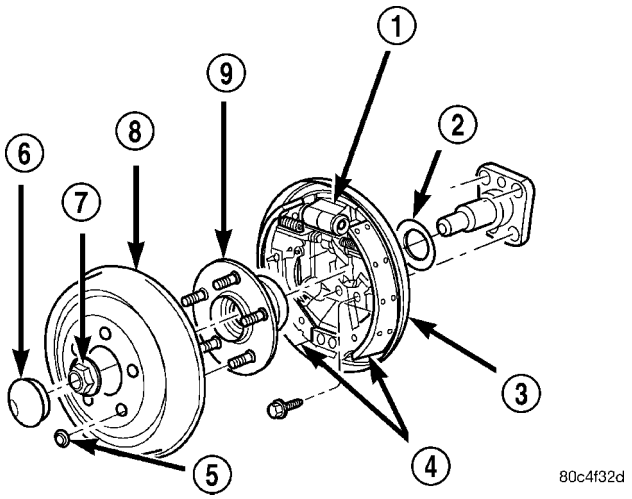

80c4f32d

Fig. 67 Drum Brakes

1 - WHEEL CYLINDER
2 - SEAL
3 - SUPPORT PLATE
4 - BRAKE SHOES
5 - RETAINER CLIP
6 - DUST CAP
7 - NUT
8 - DRUM
9 - HUB AND BEARING

NOTE: If the drum does not come off, further brake clearance can be obtained by backing off the brake automatic adjuster screw. Remove the rubber plug from the top of brake support plate. Rotate the automatic adjuster screw in an upward motion, using a screwdriver.

INSTALLATION

NOTE: Before installing the drum, inspect the brake shoe linings for wear, shoe alignment, and contamination.

(1) Adjust the brake shoes to the drum diameter using a brake shoe gauge. Refer to ADJUSTMENTS in this section.(Refer to 5 - BRAKES/HYDRAULIC/MECHANICAL/BRAKE PADS/SHOES - ADJUSTMENTS)

(2) Install the rear brake drum on rear hub and bearing (Fig. 67).

(3) Install the tire and wheel assembly. Tighten the wheel mounting nuts to a torque of 135 N·m (100 ft. lbs.).

(4) Lower the vehicle.

FLUID

DIAGNOSIS AND TESTING - BRAKE FLUID CONTAMINATION

Indications of fluid contamination are swollen or deteriorated rubber parts. Swelling indicates the presence of petroleum in the brake fluid.

To test for contamination, put a small amount of drained brake fluid in clear glass jar. If the fluid separates into layers, there is mineral oil or other fluid contamination of the brake fluid.

If the brake fluid is contaminated, drain and thoroughly flush the brake system. Replace all the rubber parts or components containing rubber coming into contact with the brake fluid including: the master cylinder and reservoir; proportioning valves (non-ABS); caliper seals; wheel cylinder seals; ABS hydraulic control unit; and all hydraulic fluid hoses.

STANDARD PROCEDURE - BRAKE FLUID LEVEL CHECKING

Brake fluid level should be checked a minimum of twice a year.

Master cylinder reservoirs are marked, FULL and MIN, indicating the allowable brake fluid level range in the master cylinder brake fluid reservoir.

CAUTION: Use only Mopar® brake fluid or an equivalent from a tightly sealed container. Brake fluid must conform to DOT 3 specifications. Do not use petroleum-based fluid because seal damage in the brake system will result.

Although there is a range, the preferred level is FULL. If necessary, adjust the brake fluid level to the FULL mark listed on the side of the master cylinder brake fluid reservoir.

SPECIFICATIONS

BRAKE FLUID

The brake fluid used in this vehicle must conform to DOT 3 specifications and SAE J1703 standards. No other type of brake fluid is recommended or approved for usage in the vehicle brake system. Use only Mopar® Brake Fluid or an equivalent from a tightly sealed container.

CAUTION: Never use reclaimed brake fluid or fluid from an container which has been left open. An open container will absorb moisture from the air and contaminate the fluid.

CAUTION: Never use any type of a petroleum-based fluid in the brake hydraulic system. Use of such type fluids will result in seal damage of the vehicle brake hydraulic system causing a failure of the vehicle brake system. Petroleum based fluids would be items such as engine oil, transmission fluid, power steering fluid, etc.

FLUID RESERVOIR

REMOVAL

NOTE: Before proceeding, (Refer to 5 - BRAKES - WARNING)(Refer to 5 - BRAKES - CAUTION).

NOTE: The master cylinder does not need to be removed from the power brake booster for removal and installation of the brake fluid reservoir.

(1) Clean the master cylinder housing and brake fluid reservoir exterior surfaces.

(2) Remove the brake fluid reservoir cap. Using a clean syringe or siphoning tool, empty as much brake fluid as possible from the reservoir.

(3) Remove the vehicle wiring harness connector from brake fluid level switch in master cylinder brake fluid reservoir (Fig. 74).

(4) Remove the two plastic pins holding the reservoir to the master cylinder (Fig. 68).

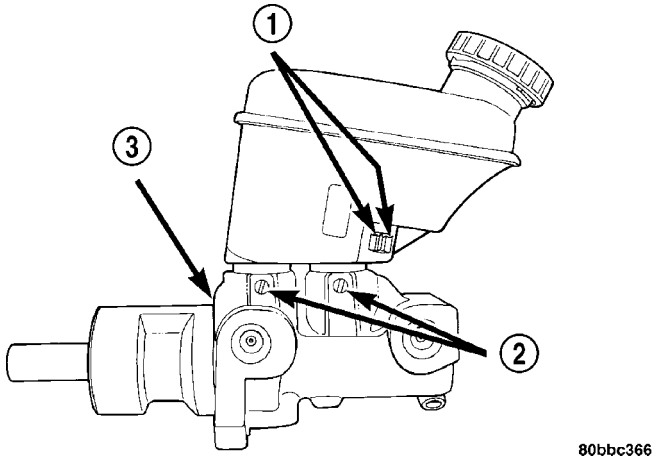

Fig. 68 Master Cylinder Reservoir

1 - BRAKE FLUID LEVEL SWITCH RETAINING TABS
2 - RESERVOIR RETAINING PINS
3 - SEAL

FLUID RESERVOIR (Continued)

(5) Lift the reservoir from the master cylinder casting.

(6) Remove the grommets (O-rings) sealing the reservoir to the master cylinder housing (Fig. 69).

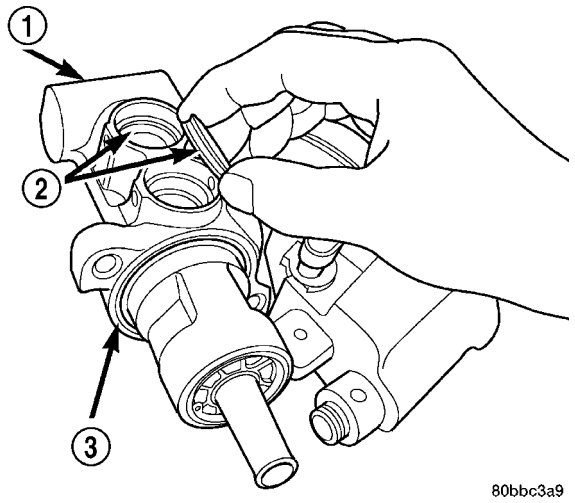

Fig. 69 Sealing Grommets

1 - MASTER CYLINDER
2 - GROMMETS (O-RINGS)
3 - SEAL

INSTALLATION

(1) Install NEW sealing grommets (O-rings) in the master cylinder housing (Fig. 69).

(2) Lubricate the sealing grommets with fresh clean DOT 3 brake fluid. Place the reservoir in position over the grommets making sure the filler hole is towards the front of the vehicle. Seat the reservoir into the grommets. While holding the reservoir firmly against the grommets, install new plastic pins through their mounting holes until they protrude out the other side of the master cylinder reservoir (Fig. 68).

(3) Connect the brake fluid level switch wiring connector (Fig. 74).

(4) Fill the reservoir with fresh clean DOT 3 brake fluid. (Refer to 5 - BRAKES/HYDRAULIC/MECHANICAL/FLUID - STANDARD PROCEDURE).

MASTER CYLINDER

DESCRIPTION

Two different master cylinders are offered on this vehicle. Vehicles without antilock brakes (ABS) use a standard compensating-port master cylinder, while vehicles equipped with ABS use a center-valve design master cylinder. All applications use a 23.82 mm (0.937 in.) bore diameter master cylinder.

The non-ABS master cylinder is a four-outlet design (one for each wheel brake) with two screw-in proportioning valves. One is attached directly to the right side of the master cylinder housing while the other is attached to the bottom (Fig. 75).

The ABS master cylinder is a two-outlet design and the brake tubes from these primary and secondary outlet ports lead directly to the integrated control unit (ICU) before going to each wheel brake (Fig. 73).

Both type master cylinders mount to the power brake booster in the same manner.

The master cylinder body is an anodized aluminum casting. It has a machined bore to accept the master cylinder pistons and also has threaded ports with seats for hydraulic brake tube connections.

The master cylinder has the brake fluid reservoir mounted on top of it which gravity feeds brake fluid to the master cylinder when it is required. The reservoir is made of see-through plastic and it houses the brake fluid level switch. A removable brake fluid level switch is mounted in the left side.

OPERATION

When the brake pedal is pressed, the master cylinder primary and secondary pistons apply brake pressure through the proportioning valves (on non-ABS vehicles) and chassis brake tubes to each brake assembly. The brake fluid reservoir supplies the brake hydraulic system with the necessary fluid to operate properly.

The non-ABS master cylinder's primary outlet ports supply hydraulic pressure to the right front and left rear brakes while the secondary outlet ports supply hydraulic pressure to the left front and right rear brakes. ABS equipped master cylinder outlet ports supply hydraulic pressure to the ABS Integrated Control Unit (ICU) where it is distributed to the individual wheel brakes.

The master cylinder reservoir cap diaphragm is slit to allow atmospheric pressure to equalize on both sides of the diaphragm.

STANDARD PROCEDURE - MASTER CYLINDER BLEEDING

(1) Clamp the master cylinder in a vise.

(2) Refer to one of the following depending on whether the master cylinder is a non-ABS unit Step a or an ABS unit Step b:

(a) Attach four Master Cylinder Bleed Tubes, Special Tool 8358-1, to the four ports of the master cylinder and tighten each in place (Fig. 70). The bleed tubes for the ports pertaining to the rear brakes are made to attach to the proportioning valves screwed into the master cylinder. Position the other end of the tubes into the master cylinder reservoir so their outlets are below the surface of the brake fluid in the reservoir when filled.

(b) Attach Master Cylinder Bleed Tube, Special Tool 8358-1, to the primary port of the master cyl-

MASTER CYLINDER (Continued)

inder and tighten in place (Fig. 71). Attach Master Cylinder Bleed Tube, Special Tool 8358-2, to the secondary port of the master cylinder and tighten in place. Position the other end of the tubes into the master cylinder reservoir so their outlets are below the surface of the brake fluid in the reservoir when filled.

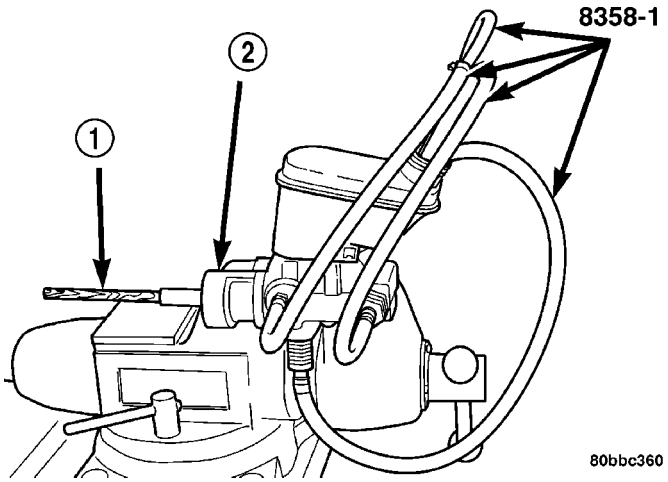

Fig. 70 Bleeding Master Cylinder - W/O ABS

1 - WOODEN DOWEL
2 - MASTER CYLINDER

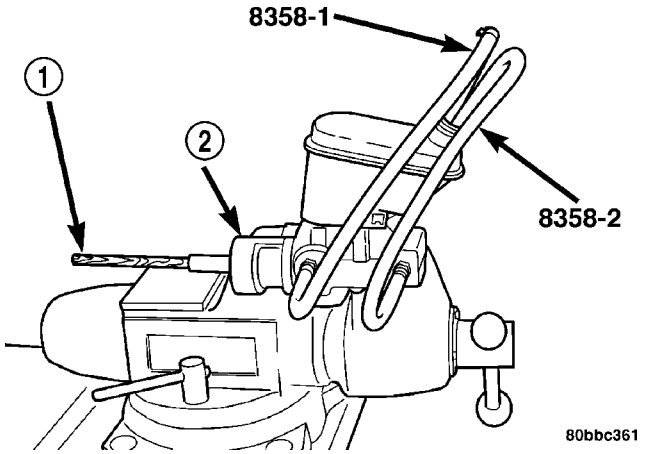

Fig. 71 Bleeding Master Cylinder - W/ABS

1 - WOODEN DOWEL
2 - MASTER CYLINDER

(3) Fill the brake fluid reservoir with fresh Mopar® brake fluid, or equivalent conforming to DOT 3 specifications.

(4) Using a wooden dowel as a pushrod (Fig. 70) (Fig. 71), press the pistons inward slowly applying brake pressure, then release the pressure, allowing the pistons to return to the released position. Repeat this several times until all air bubbles are expelled out of the tubes and master cylinder bore.

(5) Remove the bleed tubes from the master cylinder and plug the outlet ports.

(6) Install the fill cap on the reservoir.

(7) Remove the master cylinder from the vise.

REMOVAL

REMOVAL - LHD WITH ABS

NOTE: Before proceeding, (Refer to 5 - BRAKES - WARNING)(Refer to 5 - BRAKES - CAUTION).

CAUTION: The vacuum in the power brake booster must be pumped down before removing the master cylinder to prevent the booster from sucking in any contamination. This can be done by pumping the brake pedal while the engine is not running until a firm brake pedal is achieved.

(1) With the engine not running, pump the brake pedal 4-5 strokes until the pedal feel is firm.

(2) Unclip the air cleaner cover (two clips) and move the cover aside.

(3) Remove the air cleaner housing by pulling straight up.

(4) Disconnect the negative (ground) cable from the battery and isolate the cable.

(5) Unlatch the power distribution center, lift it up, and move it to the side.

(6) Remove the vehicle wiring harness connector from brake fluid level switch in master cylinder brake fluid reservoir (Fig. 72).

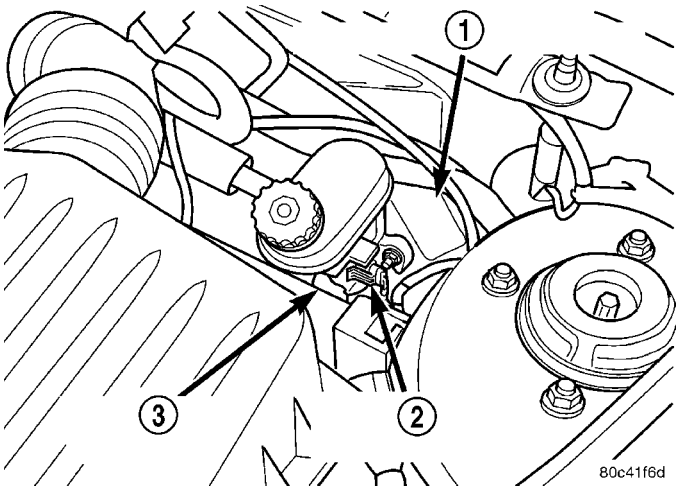

Fig. 72 Master Cylinder

1 - POWER BRAKE BOOSTER
2 - BRAKE FLUID LEVEL SWITCH
3 - MASTER CYLINDER

MASTER CYLINDER (Continued)

(7) Disconnect the two brake tubes from the master cylinder primary and secondary ports (Fig. 73). Install plugs at all of the open brake tube outlets on the master cylinder.

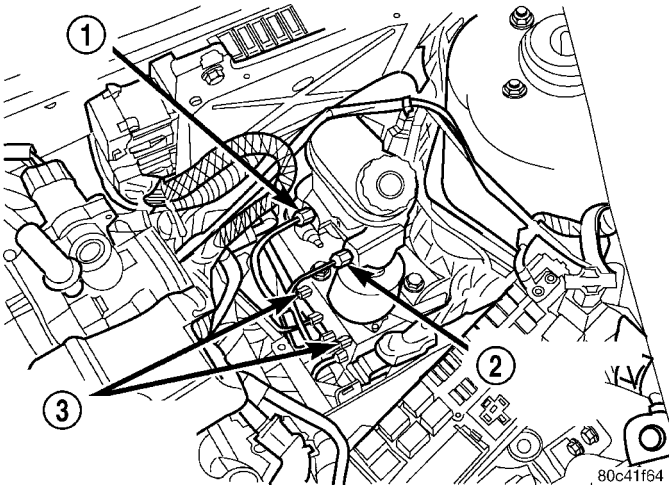

Fig. 73 Brake Tubes At Master Cylinder - W/ABS

1 - PRIMARY BRAKE TUBE
2 - SECONDARY BRAKE TUBE
3 - BRAKE TUBES FROM MASTER CYLINDER

(8) Clean the area around where the master cylinder attaches to the power brake booster using a suitable brake cleaner such as Mopar® Brake Parts Cleaner or an equivalent.

(9) Remove the two nuts attaching the master cylinder to the power brake booster.

(10) Slide the master cylinder straight out of the power brake booster.

REMOVAL - LHD WITHOUT ABS

NOTE: Before proceeding, (Refer to 5 - BRAKES - WARNING)(Refer to 5 - BRAKES - CAUTION).

CAUTION: The vacuum in the power brake booster must be pumped down before removing the master cylinder to prevent the booster from sucking in any contamination. This can be done by pumping the brake pedal while the engine is not running until a firm brake pedal is achieved.

(1) With the engine not running, pump the brake pedal 4-5 strokes until the pedal feel is firm.

(2) Unclip the air cleaner cover (two clips) and move the cover aside.

(3) Remove the air cleaner housing by pulling straight up.

(4) Disconnect the negative (ground) cable from the battery and isolate the cable.

(5) Unlatch the power distribution center, lift it up, and move it to the side.

(6) Remove the vehicle wiring harness connector from brake fluid level switch in master cylinder brake fluid reservoir (Fig. 74).

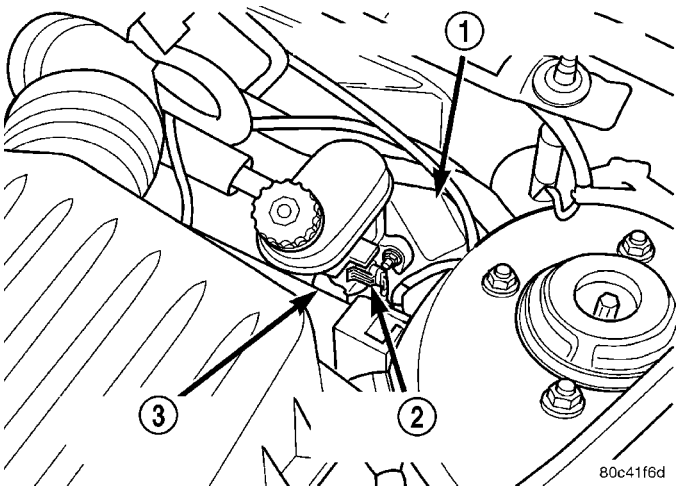

Fig. 74 Master Cylinder

1 - POWER BRAKE BOOSTER
2 - BRAKE FLUID LEVEL SWITCH
3 - MASTER CYLINDER

(7) Disconnect the two brake tubes from the master cylinder, and two brake tubes from the proportioning valves (Fig. 75). Install plugs at all of the open brake tube outlets on the master cylinder.

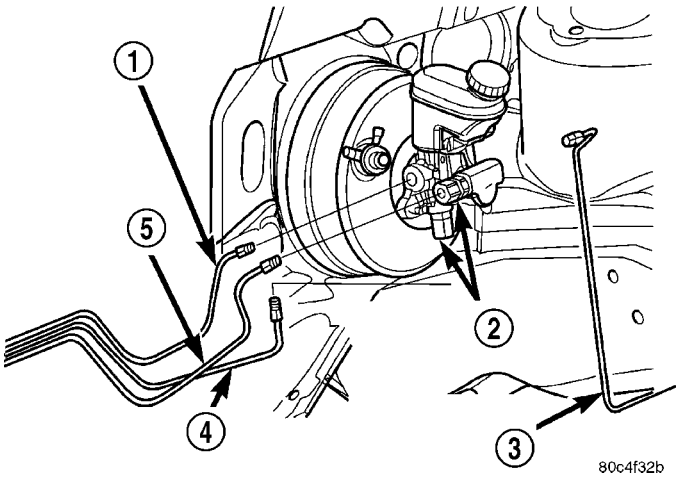

Fig. 75 Brake Tubes At Master Cylinder - W/O ABS

1 - RIGHT FRONT BRAKE TUBE
2 - PROPORTIONING VALVES
3 - LEFT FRONT BRAKE TUBE
4 - LEFT REAR BRAKE TUBE
5 - RIGHT REAR BRAKE TUBE

(8) Clean the area around where the master cylinder attaches to the power brake booster using a suitable brake cleaner such as Mopar® Brake Parts Cleaner or equivalent.

(9) Remove the two nuts attaching the master cylinder to the power brake booster.

MASTER CYLINDER (Continued)

(10) Slide the master cylinder straight out of the power brake booster.

(11) To remove the proportioning valves, unthread each from the master cylinder.

REMOVAL - RHD

NOTE: Before proceeding, (Refer to 5 - BRAKES - WARNING)(Refer to 5 - BRAKES - CAUTION).

CAUTION: The vacuum in the power brake booster must be pumped down before removing the master cylinder to prevent the booster from sucking in any contamination. This can be done by pumping the brake pedal while the engine is not running until a firm brake pedal is achieved.

(1) With the engine not running, pump the brake pedal 4-5 strokes until the pedal feel is firm.

(2) Unclip the air cleaner cover (two clips) and move the cover aside.

(3) Remove the air cleaner housing by pulling straight up.

(4) Disconnect the negative (ground) cable from the battery and isolate the cable.

(5) Remove the brake booster vacuum supply hose from the booster and position it out of the way.

(6) Disconnect wiring harness connector from brake fluid level switch in the brake fluid reservoir.

(7) Clean the area around where the master cylinder attaches to the power brake booster using a suitable brake cleaner such as Mopar® Brake Parts Cleaner or equivalent.

(8) Remove the two nuts attaching the master cylinder to the power brake booster.

(9) Slide the master cylinder straight out of the power brake booster.

INSTALLATION

INSTALLATION - LHD WITH ABS

NOTE: The master cylinder must be bled before installing it on the vehicle.

(1) Bleed the master cylinder before installing it on the vehicle. (Refer to 5 - BRAKES/HYDRAULIC/MECHANICAL/MASTER CYLINDER - STANDARD PROCEDURE)

(2) Wipe the face of the power brake booster clean where the master cylinder seal comes in contact when it's installed. Do not get any cleaner or debris inside the booster.

(3) Position the master cylinder on the studs of the power brake booster, aligning the push rod of the power brake booster with master cylinder piston push rod. Carefully push the master cylinder onto the studs until it contacts the face of the booster.

(4) Install the two master cylinder mounting nuts and tighten each to a torque of 18 N·m (160 in. lbs.).

(5) Connect the two brake tubes to the master cylinder primary and secondary ports (Fig. 73). Tighten all tube nuts to a torque of 17 N·m (145 in. lbs.).

(6) Connect the brake fluid level switch wiring connector.

(7) Install the power distribution center.

(8) Connect the negative (ground) cable on the battery.

(9) Install the air cleaner housing.

(10) Reinstall the air cleaner cover.

(11) Fill the master cylinder reservoir to the proper level. (Refer to 5 - BRAKES/HYDRAULIC/MECHANICAL/FLUID - STANDARD PROCEDURE)

WARNING: Be certain a firm brake pedal is achieved prior to attempting to operate the vehicle. If a firm brake pedal cannot be achieved, bleed the brake hydraulic system and check for leaks. (Refer to 5 - BRAKES - STANDARD PROCEDURE)

(12) Road test the vehicle to ensure proper operation of the brakes.

INSTALLATION - LHD WITHOUT ABS

(1) If removed, install the proportioning valves in their master cylinder ports. The valves are identical, so they can be installed in either master cylinder port going to the rear brakes. Make sure the O-rings on the proportioning valves are new.

NOTE: The master cylinder must be bled before installing it on the vehicle.

(2) Bleed the master cylinder. (Refer to 5 - BRAKES/HYDRAULIC/MECHANICAL/MASTER CYLINDER - STANDARD PROCEDURE)

(3) Wipe the face of the power brake booster clean where the master cylinder seal comes in contact when it's installed. Do not get any cleaner or debris inside the booster.

(4) Position the master cylinder on the studs of the power brake booster, aligning the push rod of the power brake booster with master cylinder piston push rod. Carefully push the master cylinder onto the studs until it contacts the face of the booster.

(5) Install the two master cylinder mounting nuts and tighten each to a torque of 18 N·m (160 in. lbs.).

(6) Connect the four brake tubes to the master cylinder and proportioning valve ports (Fig. 75). Tighten all tube nuts to a torque of 17 N·m (145 in. lbs.).

(7) Connect the brake fluid level switch wiring connector.

MASTER CYLINDER (Continued)

(8) Install the power distribution center.
(9) Connect the negative (ground) cable on the battery.
(10) Install the air cleaner housing.
(11) Reinstall the air cleaner cover (two clips).
(12) Fill the master cylinder to the proper level. (Refer to 5 - BRAKES/HYDRAULIC/MECHANICAL/FLUID - STANDARD PROCEDURE)

WARNING: Be certain a firm brake pedal is achieved prior to attempting to operate the vehicle. If a firm brake pedal cannot be achieved, bleed the brake hydraulic system and check for leaks. (Refer to 5 - BRAKES - STANDARD PROCEDURE)

(13) Road test the vehicle to ensure proper operation of the brakes.

INSTALLATION - RHD

NOTE: The master cylinder must be bled before installing it on the vehicle.

(1) Bleed the master cylinder. (Refer to 5 - BRAKES/HYDRAULIC/MECHANICAL/MASTER CYLINDER - STANDARD PROCEDURE)
(2) Wipe the face of the power brake booster clean where the master cylinder seal comes in contact when it's installed. Do not get any cleaner or debris inside the booster.
(3) Position the master cylinder on the studs of the power brake booster, aligning the push rod of the power brake booster with master cylinder piston push rod. Carefully push the master cylinder onto the studs until it contacts the face of the booster.
(4) Install the two master cylinder mounting nuts and tighten each to a torque of 18 N·m (160 in. lbs.).
(5) Connect brake tubes to the master cylinder. Tighten all tube nuts to a torque of 17 N·m (145 in. lbs.).
(6) Connect the brake fluid level switch wiring connector.
(7) Install the brake booster vacuum supply hose.
(8) Install the air cleaner housing.
(9) Reinstall the air cleaner cover (two clips).
(10) Fill the master cylinder to the proper level. (Refer to 5 - BRAKES/HYDRAULIC/MECHANICAL/FLUID - STANDARD PROCEDURE)

WARNING: Be certain a firm brake pedal is achieved prior to attempting to operate the vehicle. If a firm brake pedal cannot be achieved, bleed the brake hydraulic system and check for leaks. (Refer to 5 - BRAKES - STANDARD PROCEDURE)

(11) Road test the vehicle to ensure proper operation of the brakes.

PEDAL - WITH AUTOMATIC TRANSAXLE

REMOVAL

NOTE: Before proceeding, (Refer to 5 - BRAKES - WARNING).

(1) Unclip the air cleaner cover (two clips) and move the cover aside.
(2) Disconnect and isolate the battery negative cable from its post on the battery.
(3) Remove the silencer pad below the knee blocker.
(4) Fold down and remove the knee blocker.
(5) Remove the brake lamp switch by rotating the switch in a counterclockwise direction approximately 30 degrees (Fig. 76).

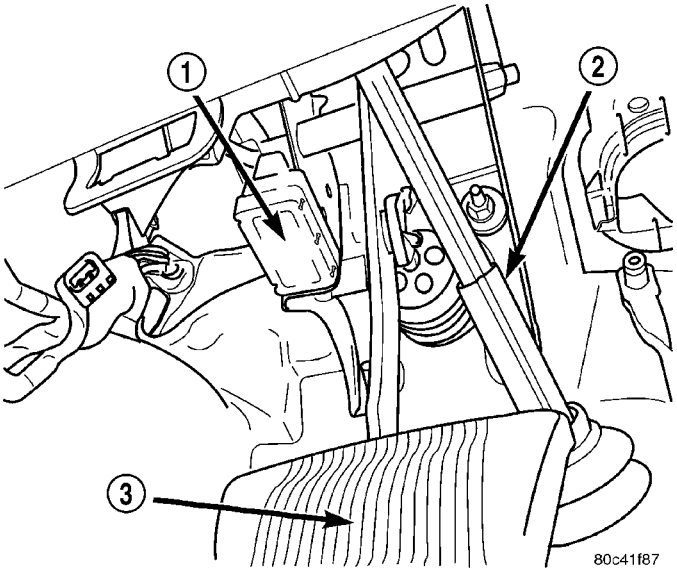

Fig. 76 Brake Lamp Switch

1 - BRAKE LAMP SWITCH
2 - STEERING COLUMN COUPLER
3 - BRAKE PEDAL

(6) Pull the switch rearward and remove it from its mounting bracket. Discard the brake lamp switch.
(7) Remove the clip securing the power brake booster input rod to the brake pedal (Fig. 77). Remove the input rod from the brake pedal.
(8) Remove the four nuts securing the power brake booster to the brake pedal bracket (Fig. 77).
(9) Remove the two remaining upper nuts securing the brake pedal bracket to the instrument panel support.
(10) Carefully remove the brake pedal and bracket assembly from the vehicle.
(11) Remove the pivot shaft nut.

PEDAL - WITH AUTOMATIC TRANSAXLE (Continued)

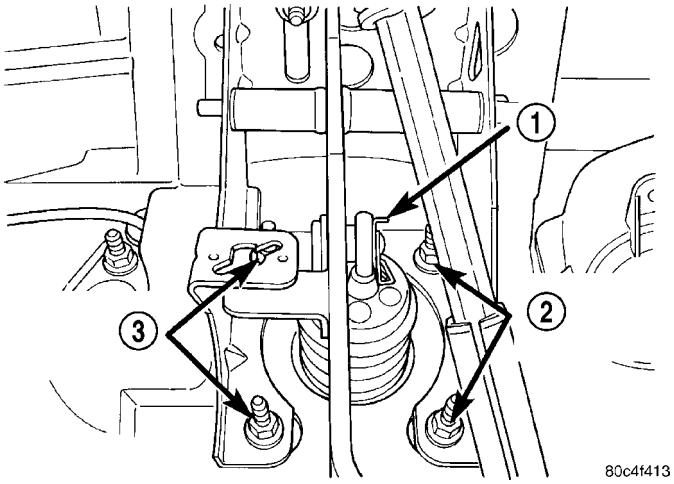

Fig. 77 Booster Mounting

1 - CLIP
2 - BOOSTER MOUNTING NUTS
3 - BOOSTER MOUNTING NUTS

(12) Remove the pivot shaft out the right side of the bracket.

(13) Slide the pedal out of its bracket.

(14) The bushings can be removed from the pedal by sliding them out each side of the pivot.

INSTALLATION

(1) Lubricate the brake pedal bushings with Mopar® Lubriplate or an equivalent.

(2) If removed, slide a bushing in each side of the pedal until the bushing shoulder contacts the pedal pivot.

(3) Install the brake pedal and bushings into the pedal mounting bracket by sliding the pedal between the sides of the bracket behind the brake lamp switch mounting flange.

(4) Once the pedal bushings line up with the mounting holes in the bracket, install the pivot shaft through the pedal from the right side.

(5) Install the pivot shaft nut. Tighten the nut to a torque of 34 N·m (25 ft. lbs.).

(6) Carefully install the brake pedal and bracket assembly in the vehicle lining up the bracket with the power brake booster mounting studs and the studs on the instrument panel support.

(7) Install the two upper nuts securing the brake pedal bracket to the instrument panel support. Install the two nuts all the way, but do not tighten them at this time.

(8) Install the four nuts securing the power brake booster to the brake pedal bracket (Fig. 77). Tighten the four nuts to a torque of 34 N·m (300 in. lbs.).

(9) Tighten the two upper nuts securing the brake pedal bracket to the instrument panel support to a torque of 34 N·m (300 in. lbs.).

(10) Install the power brake booster input rod on the pin mounted on the side of the brake pedal. Install a new retaining clip on the end of the pin (Fig. 77). Do not reuse the old clip.

CAUTION: Do not reuse the original brake lamp switch. The switch can only be adjusted once. That is during initial installation of the switch. If the switch is not adjusted properly or has been removed for some service, a new switch must be installed and adjusted.

(11) Mount and adjust the NEW brake lamp switch using the following procedure:

- Install the switch in its bracket by aligning the index tab on the switch with the slot in the mounting bracket.
- When the switch is fully seated in its bracket, rotate the switch clockwise approximately 30° to lock the switch into place (Fig. 76).
- With the brake pedal in the fully released position, move the lever on the back of the brake lamp switch from the non-adjusted angle position to the full vertical position (Fig. 78). This will adjust the brake lamp switch to the vehicle.

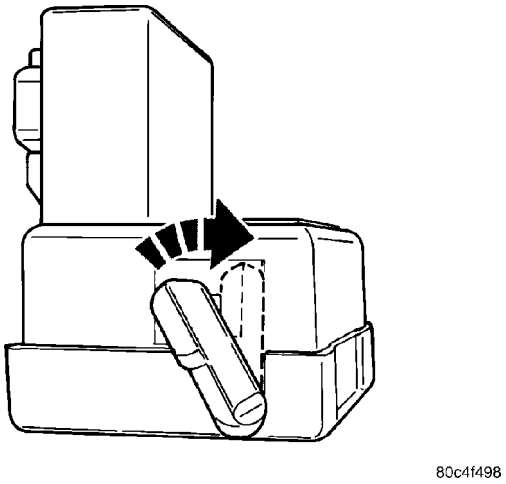

Fig. 78 Switch Adjustment Lever

(12) Install the knee blocker.

(13) Install the silencer pad below the knee blocker.

(14) Reconnect the battery negative terminal.

(15) Reinstall the air cleaner cover (two clips).

(16) Check the stop lamps to verify they are operating properly and not staying on when the pedal is in the released position.

(17) Road test the vehicle to ensure proper operation of the brakes and speed control (if equipped).

PEDAL - WITH MANUAL TRANSAXLE

REMOVAL

NOTE: Before proceeding, (Refer to 5 - BRAKES - WARNING).

(1) Unclip the air cleaner cover (two clips) and move the cover aside.

(2) Disconnect and isolate the battery negative cable from its post on the battery.

(3) Remove the silencer pad below the knee blocker.

(4) Fold down and remove the knee blocker.

(5) Remove the brake lamp switch by rotating the switch in a counterclockwise direction approximately 30 degrees (Fig. 79).

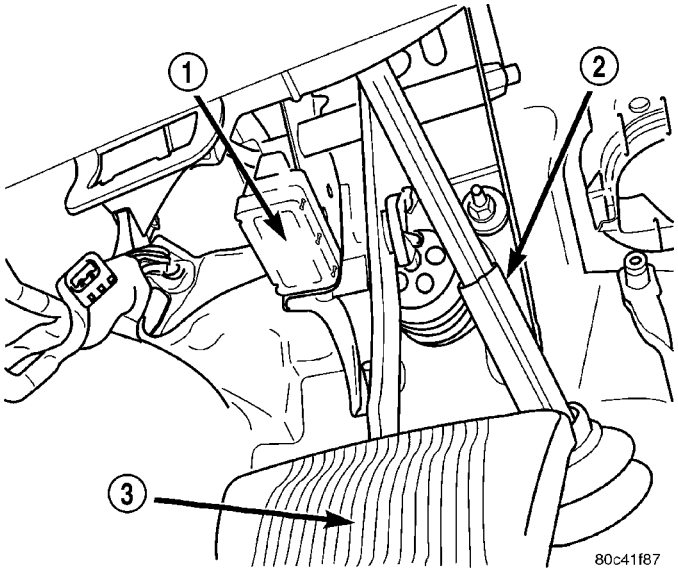

Fig. 79 Brake Lamp Switch

1 - BRAKE LAMP SWITCH
2 - STEERING COLUMN COUPLER
3 - BRAKE PEDAL

(6) Pull the switch rearward and remove it from its mounting bracket. Discard the brake lamp switch.

(7) Remove the clip securing the power brake booster input rod to the brake pedal (Fig. 80). Remove the input rod from the brake pedal.

(8) Remove the pivot shaft nut (Fig. 81).

(9) Start to remove the pivot shaft out the left side of the bracket (Fig. 81). Pull the shaft to the left until the brake pedal can be removed, stopping short of removing the shaft from the clutch pedal.

(10) Slide the brake pedal out of its bracket and remove it from the vehicle.

(11) The bushings can be removed from the pedal by sliding them out each side (Fig. 81).

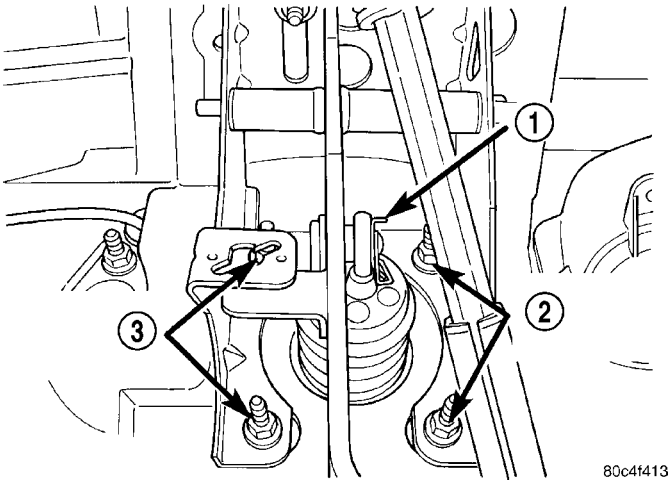

Fig. 80 Booster Push Rod Clip

1 - CLIP
2 - BOOSTER MOUNTING NUTS
3 - BOOSTER MOUNTING NUTS

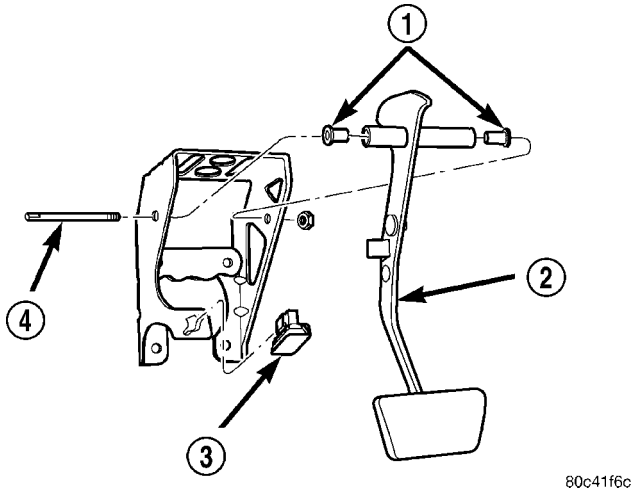

Fig. 81 Brake Pedal Mounting (Typical)

1 - BUSHINGS
2 - BRAKE PEDAL
3 - BRAKE LAMP SWITCH
4 - PIVOT SHAFT

INSTALLATION

(1) Lubricate the brake pedal bushings with Mopar® Lubriplate or an equivalent.

(2) If removed, slide a bushing in each side of the pedal pivot until the bushing shoulder contacts the pedal pivot.

(3) Install the brake pedal and bushings into the pedal mounting bracket by sliding the pedal between the sides of the bracket behind the brake lamp switch mounting flange (Fig. 81).

(4) Once the pedal bushings line up with the mounting holes in the bracket, install the pivot shaft through the pedal from the left side (Fig. 81).

PEDAL - WITH MANUAL TRANSAXLE (Continued)

(5) Install the pivot shaft nut (Fig. 81). Tighten the nut to a torque of 34 N·m (25 ft. lbs.).

(6) Install the power brake booster input rod on the pin mounted on the side of the brake pedal. Install a new retaining clip on the end of the pin (Fig. 80). Do not reuse the old clip.

CAUTION: Do not reuse the original brake lamp switch. The switch can only be adjusted once. That is during initial installation of the switch. If the switch is not adjusted properly or has been removed for some service, a new switch must be installed and adjusted.

(7) Mount and adjust the NEW brake lamp switch using the following procedure:

- Install the switch in its bracket by aligning the index tab on the switch with the slot in the mounting bracket.
- When the switch is fully seated in its bracket, rotate the switch clockwise approximately 30° to lock the switch into place (Fig. 79).
- With the brake pedal in the fully released position, move the lever on the back of the brake lamp switch from the non-adjusted angle position to the full vertical position (Fig. 82). This will adjust the brake lamp switch to the vehicle.

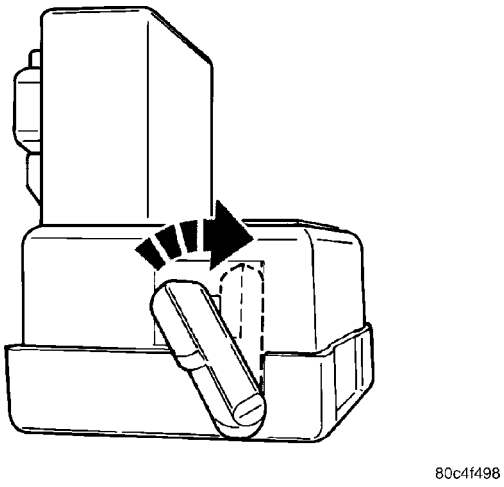

Fig. 82 Switch Adjustment Lever

(8) Install the knee blocker.

(9) Install the silencer pad below the knee blocker.

(10) Reconnect the battery negative terminal.

(11) Reinstall the air cleaner cover (two clips).

(12) Check the stop lamps to verify they are operating properly and not staying on when the pedal is in the released position.

(13) Road test the vehicle to ensure proper operation of the brakes and speed control (if equipped).

POWER BRAKE BOOSTER

DESCRIPTION

The power brake booster is mounted to the engine side of the dash panel. The master cylinder is bolted to the front of the booster (Fig. 83). A vacuum check valve is also mounted on the front of the booster. A vacuum line connects the check valve to engine source vacuum. The booster input rod extends through the dash panel and connects to the brake pedal.

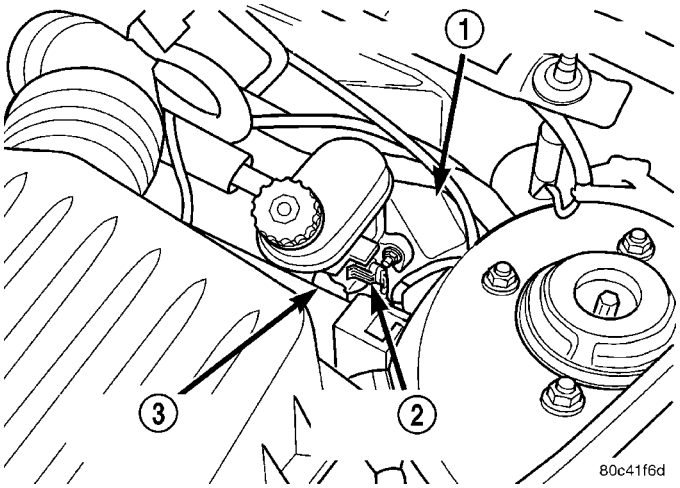

Fig. 83 Power Brake Booster Location

1 - POWER BRAKE BOOSTER
2 - BRAKE FLUID LEVEL SWITCH
3 - MASTER CYLINDER

There are two different power brake booster designs, although externally they appear the same. All vehicles use a 205 mm tandem diaphragm power brake booster. The two boosters are internally tuned differently depending on whether the vehicle is equipped with the standard front disc/rear drum brake combination or the optional front disc/rear disc (four-wheel-disc) brake combination. If the power brake booster requires replacement, be sure it is replaced with the correct part.

The power brake booster can be identified by the tag attached to the body of the booster assembly (Fig. 84). This tag contains the following information:

- The production part number
- The date it was built, and
- The booster manufacturer.

POWER BRAKE BOOSTER (Continued)

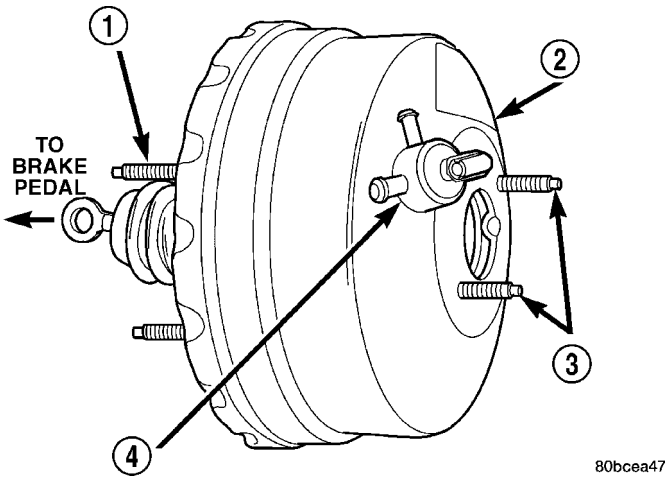

Fig. 84 Power Brake Booster

1 - MOUNTING STUD
2 - PARTS IDENTIFICATION TAG
3 - MASTER CYLINDER MOUNTING STUDS
4 - VACUUM CHECK VALVE

OPERATION

The purpose of the power brake booster is to reduce the amount of force required by the driver (foot-pedal pressure) to obtain the required hydraulic pressure in the brake system to stop the vehicle.

The power brake booster is vacuum operated. The vacuum is supplied from the intake manifold on the engine through the vacuum hose and power brake booster vacuum check valve.

As the brake pedal is depressed, the power booster input rod moves forward. This opens and closes valves in the power brake booster, allowing atmospheric pressure to enter on one side of a diaphragm. Engine vacuum is always present on the other side. This difference in pressure forces the output rod of the power booster out against the primary piston of the master cylinder. As the pistons in the master cylinder move forward, hydraulic pressure is created in the brake system.

DIAGNOSIS AND TESTING - POWER BRAKE BOOSTER

BASIC TEST

(1) With engine off, depress and release the brake pedal several times to purge all vacuum from the power brake booster.

(2) Depress and hold the pedal with light effort (15 to 25 lbs. pressure), then start the engine.

The pedal should fall slightly, then hold. Less effort should be needed to apply the pedal at this time. If the pedal fell as indicated, perform the VACUUM LEAK TEST listed after the BASIC TEST. If the pedal did not fall, continue on with this BASIC TEST.

(3) Disconnect the vacuum hose on the side of the vacuum check valve that leads to the speed control, then connect a vacuum gauge to the open vacuum port on the valve.

(4) Start the engine.

(5) When the engine is at warm operating temperature, allow it to idle and check the vacuum at the gauge.

If the vacuum supply is 12 inches Hg (40.5 kPa) or more, the power brake booster is defective and must be replaced. If the vacuum supply is below 12 inches, continue on with this BASIC TEST.

(6) Shut off the engine.

(7) Connect the vacuum gauge to the vacuum reference port on the engine intake manifold.

(8) Start the engine and observe the vacuum gauge.

If the vacuum is still low, check the engine tune and repair as necessary. If the vacuum is above 12 inches, the hose or check to the booster has a restriction or leak.

Once an adequate vacuum supply is obtained, repeat the BASIC TEST.

VACUUM LEAK TEST

(1) Disconnect the vacuum hose on the side of the power brake booster vacuum check valve that leads to the speed control, then connect a vacuum gauge to the open vacuum port on the valve.

(2) Remove the remaining hose on the vacuum check valve that is not the vacuum supply hose coming from the intake manifold. Cap off the open port on the check valve.

(3) Start the engine.

(4) Allow the engine to warm up to normal operating temperature and engine idle.

(5) Using vacuum line pliers, close off the vacuum supply hose near the booster and observe the vacuum gauge.

If the vacuum drop exceeds 1.0 inch Hg (3.3 kPa) in one minute, repeat the above steps to confirm the reading. The vacuum loss should be less than 1.0 inch Hg in one minute time span. If the loss is more than 1.0 inch Hg, replace the power brake booster. If it is not, continue on with this test.

(6) Remove the pliers from the hose temporarily.

(7) Apply light effort (approximately 15 lbs. of force) to the brake pedal and hold the pedal steady. Do not move the pedal once the pressure is applied or the test results may vary.

(8) Have an assistant reattach the pliers to the vacuum supply hose.

(9) Allow 5 seconds for stabilization, then observe the vacuum gauge.

If the vacuum drop exceeds 3.0 inches Hg (10 kPa) in 15 seconds, repeat the above steps to confirm the

POWER BRAKE BOOSTER (Continued)

reading. The vacuum loss should be less than 3.0 inches Hg in 15 seconds time span. If the loss is more than 3.0 inches Hg, replace the power brake booster. If it is not, the booster is not defective.

REMOVAL

REMOVAL - LHD

NOTE: Before proceeding, (Refer to 5 - BRAKES - WARNING)(Refer to 5 - BRAKES - CAUTION).

(1) Remove the air cleaner cover and hose to the throttle body.

(2) Remove the air cleaner housing by pulling straight up.

(3) Disconnect negative (ground) cable from the battery and isolate the cable.

(4) Unlatch the power distribution center, lift it up, and move it to the side.

(5) Remove the master cylinder. (Refer to 5 - BRAKES/HYDRAULIC/MECHANICAL/MASTER CYLINDER - REMOVAL)

(6) If the vehicle is equipped with ABS, remove the integrated control unit (ICU). (Refer to 5 - BRAKES/ HYDRAULIC/MECHANICAL/ICU (INTEGRATED CONTROL UNIT) - REMOVAL)

(7) If the vehicle is equipped with ABS, remove the three bolts securing the ICU mounting bracket to the frame rail (Fig. 85).

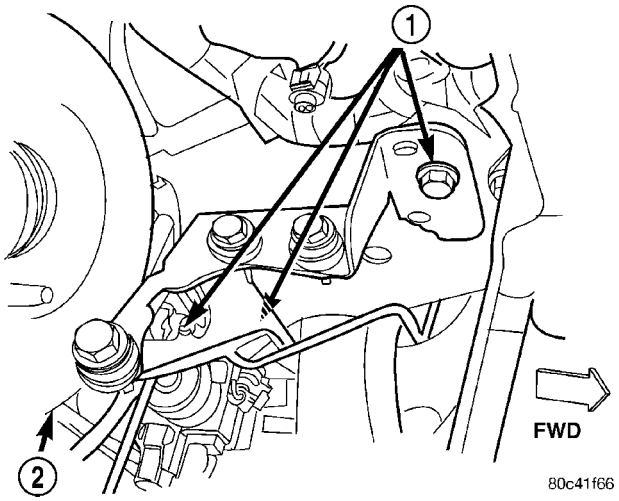

Fig. 85 ICU Mounting Bracket

1 - BOLTS
2 - BOOSTER

(8) Disconnect the vacuum hoses from the check valve on the power brake booster (Fig. 86), but do not remove the check valve from power brake booster.

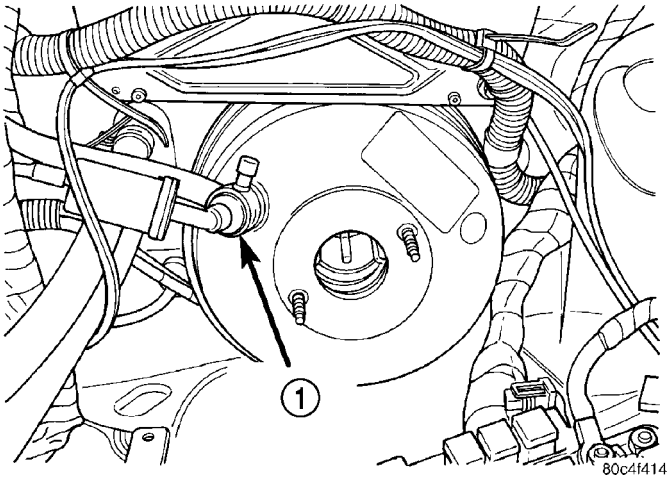

Fig. 86 Vacuum Check Valve

1 - VACUUM CHECK VALVE

(9) Inside the vehicle, remove the silencer pad below the knee blocker.

(10) Fold down and remove the knee blocker.

(11) Locate the brake pedal-to-power brake booster input rod attachment under the instrument panel. Position a small screwdriver under the center tang of the retaining clip (Fig. 87). Rotate the screwdriver enough to allow the retaining clip tang to pass over the end of the brake pedal pin. Remove the clip.

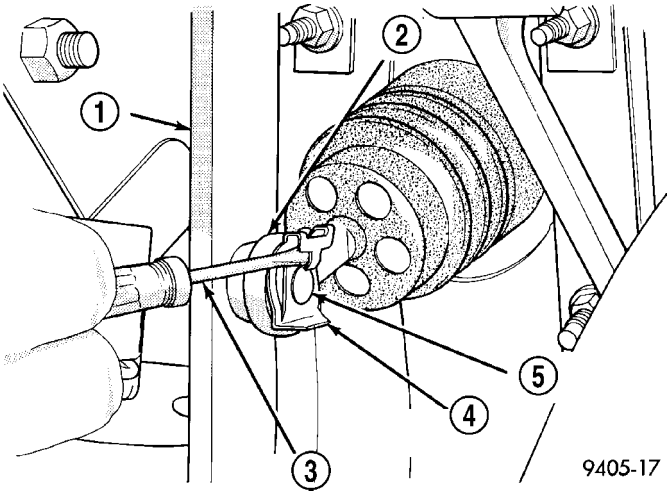

Fig. 87 Retaining Clip

1 - BRAKE PEDAL
2 - INPUT ROD
3 - SCREWDRIVER
4 - RETAINING CLIP
5 - BRAKE PEDAL PIN

CAUTION: Discard the used retaining clip, it is not to be reused. Replace the clip with a new one on reassembly.

POWER BRAKE BOOSTER (Continued)

(12) Remove the four nuts attaching the power brake booster to the instrument panel (Fig. 88). The nuts are accessible from under the instrument panel in the area of the brake pedal bracket.

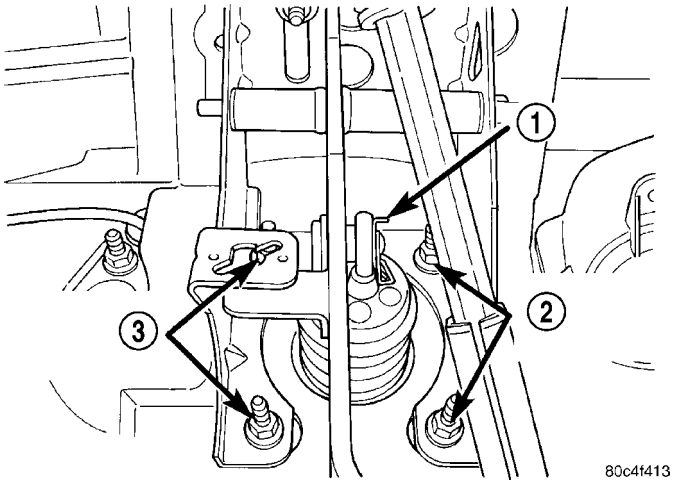

Fig. 88 Power Brake Booster Mounting

1 - CLIP
2 - BOOSTER MOUNTING NUTS
3 - BOOSTER MOUNTING NUTS

(13) Slide the power brake booster forward until mounting studs clear the instrument panel, then remove it from the vehicle.

REMOVAL - RHD

NOTE: Before proceeding, (Refer to 5 - BRAKES - WARNING)(Refer to 5 - BRAKES - CAUTION).

(1) Remove the air cleaner cover and hose to the throttle body.

(2) Remove the air cleaner housing by pulling straight up.

(3) Disconnect negative (ground) cable from the battery and isolate the cable.

(4) Unlatch the power distribution center, lift it up, and move it to the side.

(5) Using a R-134a refrigerant recovery machine, remove the refrigerant from the A/C system. (Refer to 24 - HEATING & AIR CONDITIONING - STANDARD PROCEDURE)

(6) Disconnect the refrigerant lines at their mid-line connection block just above the upper engine torque strut. Position the refrigerant lines out of the way and cap all openings to prevent contamination.

(7) Remove the master cylinder. (Refer to 5 - BRAKES/HYDRAULIC/MECHANICAL/MASTER CYLINDER - REMOVAL)

(8) Inside the vehicle, remove the silencer pad below the knee blocker.

(9) Fold down and remove the knee blocker.

(10) Locate the brake pedal-to-power brake booster input rod attachment under the instrument panel. Position a small screwdriver under the center tang of the retaining clip (Fig. 87), then rotate the screwdriver enough to allow the retaining clip tang to pass over the end of the brake pedal pin. Remove the clip.

CAUTION: Discard the used retaining clip, it is not to be reused. Replace the clip with a new one on reassembly.

(11) Remove the four nuts attaching the power brake booster to the instrument panel. The nuts are accessible from under the instrument panel in the area of the brake pedal bracket.

(12) Slide the power brake booster forward until mounting studs clear the dash panel, then remove it from engine compartment by carefully positioning booster lip past edge of engine cover. Use care to prevent breaking valve cover.

INSTALLATION

INSTALLATION - LHD

NOTE: Before power brake booster installation, be certain dash seal is installed on booster mounting studs.

(1) Install the power brake booster by sliding the input rod and studs through the dash panel and into mounting position.

(2) Under the instrument panel, install the four power brake booster mounting nuts (Fig. 88). Tighten the nuts to a torque of 34 N·m (25 ft. lbs.).

(3) Using Mopar® Lubriplate, or an equivalent, coat the surface of the brake pedal pin where it contacts the brake booster input rod.

CAUTION: Use only a new brake booster input rod-to-brake pedal retaining clip to ensure proper retainment.

(4) Connect the power brake booster input rod-to-brake pedal pin. Install a new retaining clip. Do not use the old clip.

CAUTION: Do not reuse the original brake lamp switch. The switch can only be adjusted once. That is during initial installation of the switch. If the switch is not adjusted properly or has been removed for some service, a new switch must be installed and adjusted.

POWER BRAKE BOOSTER (Continued)

(5) Remove and replace the brake lamp switch with a NEW switch. Discard the original brake lamp switch. (Refer to 8 - ELECTRICAL/LAMPS/LIGHTING - EXTERIOR/BRAKE LAMP SWITCH - REMOVAL) (Refer to 8 - ELECTRICAL/LAMPS/LIGHTING - EXTERIOR/BRAKE LAMP SWITCH - INSTALLATION)

(6) Install the knee blocker.

(7) Install the silencer pad below the knee blocker.

(8) Connect all previously removed vacuum hoses to the vacuum check valve (Fig. 86).

(9) If the vehicle is equipped with ABS, install the ICU mounting bracket on the frame rail using its three bolts (Fig. 85). Tighten the nuts to a torque of 23 N·m (200 in. lbs.).

(10) If the vehicle is equipped with ABS, reinstall the ICU. (Refer to 5 - BRAKES/HYDRAULIC/MECHANICAL/ICU (INTEGRATED CONTROL UNIT) - INSTALLATION)

(11) Install the master cylinder. (Refer to 5 - BRAKES/HYDRAULIC/MECHANICAL/MASTER CYLINDER - INSTALLATION)

(12) Install the power distribution center.

(13) Connect the negative (ground) cable on the battery.

(14) Install the air cleaner housing.

(15) Reinstall the air cleaner cover and hose to throttle body.

(16) Bleed the base brake system. (Refer to 5 - BRAKES - STANDARD PROCEDURE)

(17) Road test the vehicle to ensure proper operation of the brakes.

INSTALLATION - RHD

(1) Install the brake booster on the dash panel using the reverse of how it was removed. Be certain dash seal is installed on booster studs prior to installation.

(2) Under the instrument panel, install the four power brake booster mounting nuts. Tighten the nuts to a torque of 34 N·m (25 ft. lbs.).

(3) Using Mopar® Lubriplate, or an equivalent, coat the surface of the brake pedal pin where it contacts the brake booster input rod.

CAUTION: Use only a new brake booster input rod-to-brake pedal retaining clip to ensure proper retainment.

(4) Connect the power brake booster input rod-to-brake pedal pin. Install a new retaining clip. Do not use the old clip.

CAUTION: Do not reuse the original brake lamp switch. The switch can only be adjusted once. That is during initial installation of the switch. If the switch is not adjusted properly or has been removed for some service, a new switch must be installed and adjusted.

(5) Remove and replace the brake lamp switch with a NEW switch. Discard the original brake lamp switch. (Refer to 8 - ELECTRICAL/LAMPS/LIGHTING - EXTERIOR/BRAKE LAMP SWITCH - REMOVAL) (Refer to 8 - ELECTRICAL/LAMPS/LIGHTING - EXTERIOR/BRAKE LAMP SWITCH - INSTALLATION)

(6) Install the knee blocker.

(7) Install the silencer pad below the knee blocker.

(8) Install the master cylinder on the vehicle. (Refer to 5 - BRAKES/HYDRAULIC/MECHANICAL/MASTER CYLINDER - INSTALLATION)

(9) Remove the caps and connect refrigerant lines. Be certain the sealing O-rings are well lubricated with PAG oil and free of tears. Torque the retaining fastener to 40 in. lbs.

(10) Using a R-134a refrigerant recovery machine, evacuate and charge the refrigerant system. (Refer to 24 - HEATING & AIR CONDITIONING - STANDARD PROCEDURE)

(11) Connect the negative (ground) cable on the battery.

(12) Install the air cleaner housing.

(13) Reinstall the air cleaner cover and hose to throttle body.

WARNING: Be certain a firm brake pedal is achieved prior to attempting to operate the vehicle.

(14) Road test the vehicle to ensure proper operation of the brakes.

PROPORTIONING VALVE

DESCRIPTION

NOTE: Only vehicles without antilock brakes have proportioning valves. Vehicles with antilock brakes have Electronic Variable Brake Proportioning (EVBP) that is built into the integrated control unit.

On the non-antilock master cylinder, two screw-in proportioning valves are screwed directly into the rear brake outlet ports (Fig. 94). The chassis brake tubes leading to the rear brakes attach to the outlets of the proportioning valves. One proportioning valve controls each rear brake.

PROPORTIONING VALVE (Continued)

OPERATION

Proportioning valves balance front to rear braking by controlling the brake fluid hydraulic pressure to the rear brakes above a preset level (split point). Under light pedal application, the proportioning valve allows normal fluid flow to the rear brakes. Under higher pedal effort, the valve reduces fluid pressure to the rear brakes. This helps prevent rear wheel skid tendencies.

DIAGNOSIS AND TESTING - PROPORTIONING VALVE

NOTE: Only vehicles without antilock brakes have proportioning valves. Vehicles with antilock brakes have Electronic Variable Brake Proportioning (EVBP) which is built into the integrated control unit.

If premature rear wheel skid occurs on a hard brake application, it could be an indication that a malfunction has occurred with one of the proportioning valves.

One proportioning valve controls the right rear brake and the other proportioning valve controls the left rear brake (Fig. 89). Therefore, a road test to determine which rear brake skids first is essential.

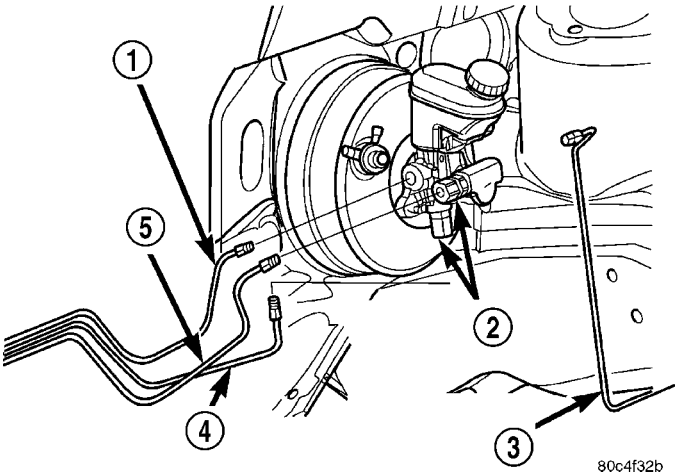

Fig. 89 Proportioning Valve Location

1 - RIGHT FRONT BRAKE TUBE
2 - PROPORTIONING VALVES
3 - LEFT FRONT BRAKE TUBE
4 - LEFT REAR BRAKE TUBE
5 - RIGHT REAR BRAKE TUBE

Before testing the proportioning valve in question, inspect the rear brake linings for contamination or for replacement shoes not meeting the OEM brake lining material specifications.

The proportioning valve should always be tested prior to being replaced.

The in-line proportioning valves used on this vehicle require special pressure fittings to test the proportioning valves for proper proportioning valve function. The pressure fittings are installed before and after the proportioning valve being tested to verify proportioning valve is maintaining the required hydraulic pressure to the rear wheel brake which it controls.

PROPORTIONING VALVE TEST

The test procedure is the same for either rear proportioning valve. After road testing the vehicle to determine which wheel skids first, follow the procedure below for testing the suspect proportioning valve.

(1) Using a brake pedal holding tool as shown (Fig. 90), depress the brake pedal past its first one inch of travel and hold it in this position. This will isolate the master cylinder from the brake hydraulic system and will not allow the brake fluid to drain out of the master cylinder reservoir.

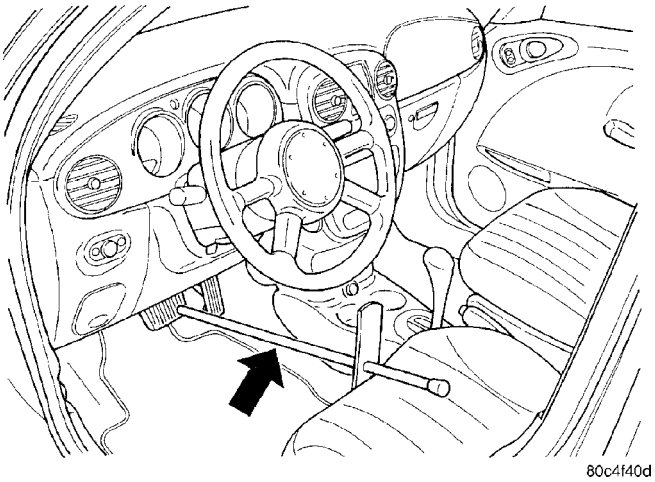

Fig. 90 Brake Pedal Holding Tool

(2) Use the figure shown to determine which proportioning valve needs to be tested (Fig. 89).

(3) Remove the hydraulic brake tube from the proportioning valve controlling the rear wheel of the vehicle that has premature wheel skid.

(4) Remove the proportioning valve from its outlet port on the master cylinder.

PROPORTIONING VALVE (Continued)

CAUTION: Be sure the pressure test fittings being installed into master cylinder and proportioning valve, have the correct thread sizes needed.

(5) Install the Brake Pressure Adapters, Special Tool 8644 and 8187-2 onto the proportioning valve (Fig. 91).

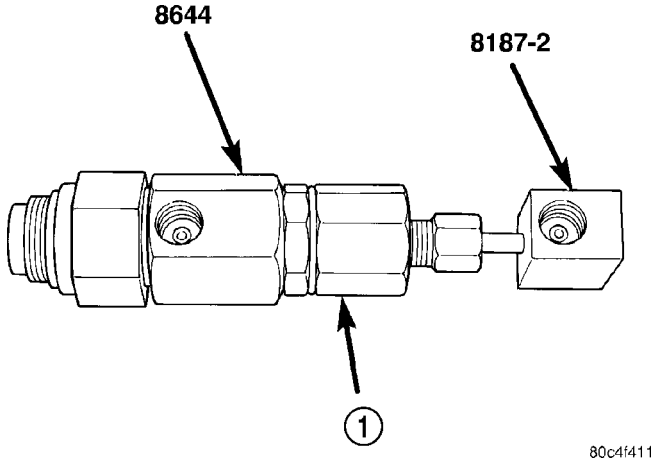

Fig. 91 Tools On Valve

1 - PROPORTIONING VALVE

(6) Install the proportioning valve (with tools) back into the outlet port on the master cylinder.

(7) Attach a Pressure Gauge, Special Tool C-4007-A, to each pressure adapter (Fig. 92).

(8) Remove the brake pedal holding tool. Bleed any air out of the pressure gauge hoses at the pressure gauge.

(9) With the aid of a helper, apply pressure to the brake pedal until the reading on proportioning valve inlet gauge is at the target inlet pressure shown in the Brake Proportioning Valve Applications And Pressure Specifications table following this procedure. If the inlet gauge pressure overshoots its target pressure when the pedal is depressed, release the brake pedal, relieving the pressure in the system, before reapplying the pedal to reach the target pressure at the inlet gauge. This is necessary to get an accurate reading of the outlet pressure.

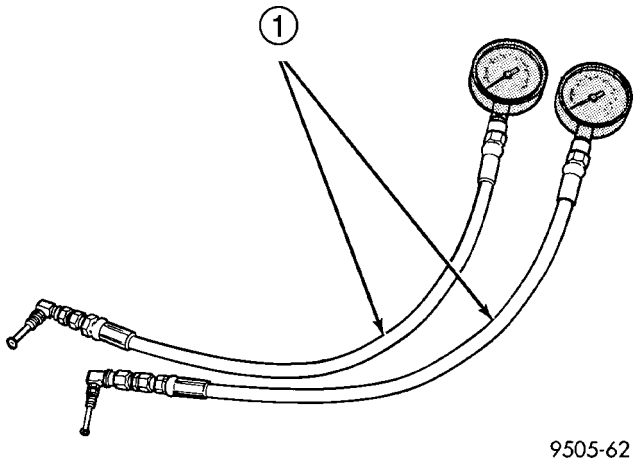

Fig. 92 Pressure Gauge Set

1 - SPECIAL TOOL C-4007–A

(10) Once inlet pressure has been achieved, check the pressure reading on the proportioning valve outlet gauge. If the proportioning valve outlet pressure does not agree with value shown in the table, replace the proportioning valve. If proportioning valve is within pressure specifications, the valve is good and does not require replacement.

(11) Reinstall the brake holding tool on the brake pedal and remove the test equipment from the vehicle.

(12) Remove the tools from the proportioning valve.

(13) Install the proportioning valve in the master cylinder and hand tighten until the proportioning valve is fully installed and its O-ring seal is seated into the master cylinder. Tighten the proportioning valve to a torque of 40 N·m (30 ft. lbs.).

(14) Install the brake tube on the proportioning valve. Tighten the tube nut to a torque of 17 N·m (145 in. lbs.).

(15) Bleed the affected brake line. (Refer to 5 - BRAKES - STANDARD PROCEDURE)

BRAKE PROPORTIONING VALVE APPLICATIONS AND PRESSURE SPECIFICATIONS

Sales Code	Brake System Type	Split Point	Slope	Identification	Inlet Pressure	Outlet Pressure
BRB	15″ Disc/Drum	400 psi	0.34	Black Band	1000 psi	600-700 psi

PROPORTIONING VALVE (Continued)

REMOVAL

NOTE: Before proceeding, (Refer to 5 - BRAKES - WARNING)(Refer to 5 - BRAKES - CAUTION).

(1) Using a brake pedal holder, depress the brake pedal past its first one inch of travel and hold it in this position (Fig. 93). This will isolate the master cylinder from the brake hydraulic system and will not allow the brake fluid to drain out of the master cylinder reservoir.

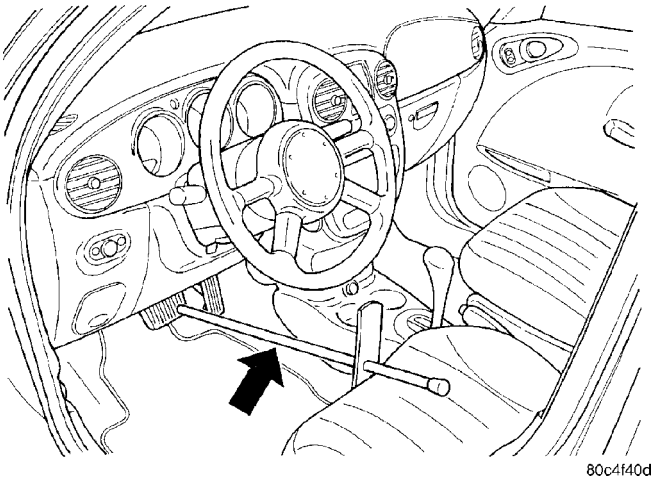

Fig. 93 Brake Pedal Holder

NOTE: To access the lower (left rear) proportioning valve, it may help to remove the air cleaner cover and hose to the throttle body.

(2) Disconnect the brake tube from the proportioning valve requiring removal (Fig. 94).

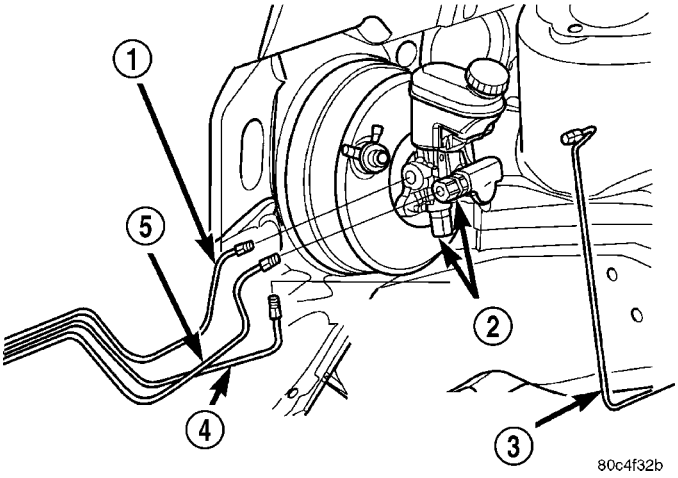

Fig. 94 Proportioning Valves On Master Cylinder

1 - RIGHT FRONT BRAKE TUBE
2 - PROPORTIONING VALVES
3 - LEFT FRONT BRAKE TUBE
4 - LEFT REAR BRAKE TUBE
5 - RIGHT REAR BRAKE TUBE

(3) Unscrew the Proportioning valve from the master cylinder.

INSTALLATION

(1) Lubricate the O-ring on the proportioning valve. Make sure the O-ring on the proportioning valve is new.

(2) Install the proportioning valve in its master cylinder port. Tighten the proportioning valve to a torque of 40 N·m (30 ft. lbs.).

(3) Connect the brake tube to the proportioning valve (Fig. 94). Tighten the tube nut to a torque of 17 N·m (145 in. lbs.).

NOTE: Reinstall the air cleaner cover and hose if earlier removed to gain more access to the lower (left rear) proportioning valve.

(4) Remove the brake pedal holder (Fig. 93).

(5) Bleed the affected brake line. (Refer to 5 - BRAKES - STANDARD PROCEDURE)

(6) Road test the vehicle to ensure proper operation of the brakes.

ROTOR

DESCRIPTION

There are two different size rotors available depending on brake application. Vehicles with the brake sales code BRB (Disc/Drum combination) and BRT (Disc/Disc combination) use standard size brake rotors. Vehicles equipped with the brake sales code BR4 (Performance Disc/Disc combination) use heavier brake rotors. The BR4 front brake rotor is approximately 5 mm thicker than the standard front brake rotor. The BR4 rear brake rotor is approximately 3 mm thicker than the standard rear brake rotor. The BR4 brake rotors can be easily identified by the recessed machined area near the hub center (Fig. 95) (Fig. 96).

DIAGNOSIS AND TESTING - BRAKE ROTOR

Any servicing of the rotor requires extreme care to maintain the rotor within service tolerances to ensure proper brake action.

Excessive runout or wobble in a rotor can increase pedal travel due to piston knock-back. This increases guide pin sleeve wear due to the tendency of the caliper to follow the rotor wobble.

When diagnosing a brake noise or pulsation, the machined disc braking surface should be checked and inspected.

ROTOR (Continued)

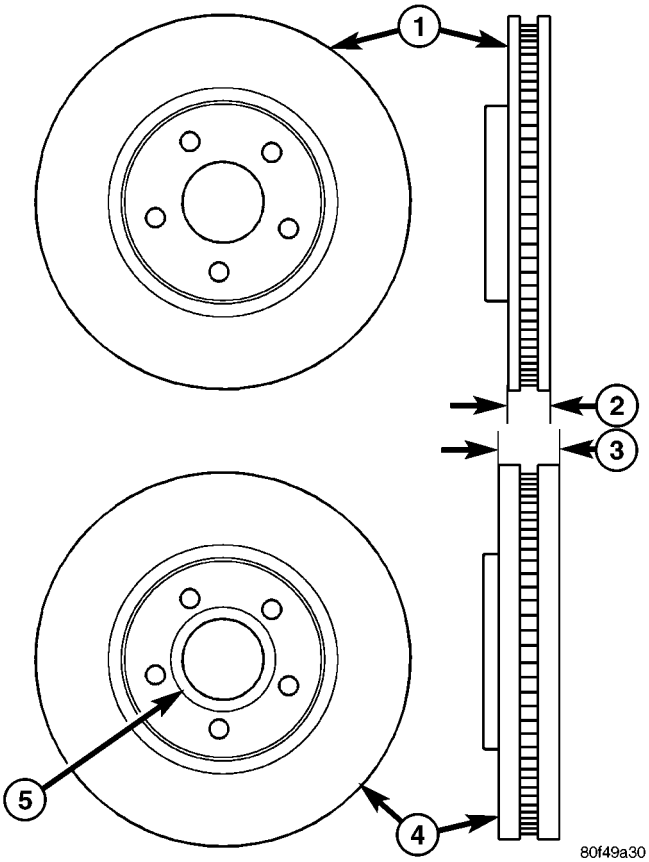

Fig. 95 Front Brake Rotor Comparison

1 - BRB/BRT BRAKE ROTOR
2 - STANDARD ROTOR THICKNESS
22.91-23.10 MM
3 - PERFORMANCE ROTOR THICKNESS
27.91-28.10 MM
4 - BR4 PERFORMANCE BRAKE ROTOR
5 - INDENTIFYING MACHINED AREA

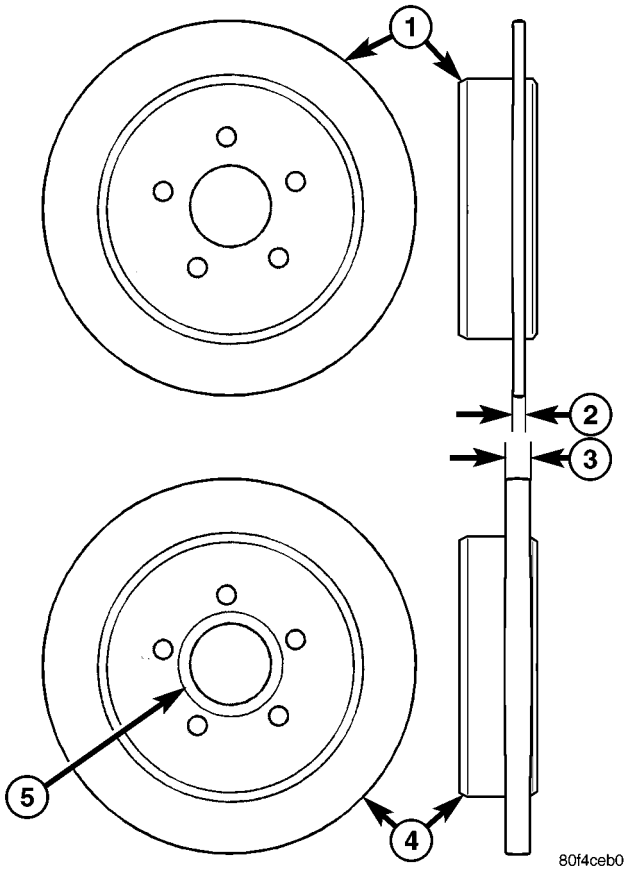

Fig. 96 Rear Brake Rotor Comparison

1 - BRT BRAKE ROTOR
2 - STANDARD ROTOR THICKNESS
8.75-9.25 MM
3 - PERFORMANCE ROTOR THICKNESS
11.75-12.25 MM
4 - BR4 PERFORMANCE BRAKE ROTOR
5 - INDENTIFYING MACHINED AREA

BRAKING SURFACE INSPECTION

Light braking surface scoring and wear is acceptable. If heavy scoring or warping is evident, the rotor must be refaced or replaced. (Refer to 5 - BRAKES/HYDRAULIC/MECHANICAL/ROTOR - STANDARD PROCEDURE)

Excessive wear and scoring of the rotor can cause improper lining contact on the rotor's braking surface. If the ridges on the rotor are not removed before new brake shoes are installed, improper wear of the shoes will result.

If a vehicle has not been driven for a period of time, the rotor's braking surface will rust in the areas not covered by the brake shoes at that time. Once the vehicle is driven, noise and chatter from the disc brakes can result when the brakes are applied until the rust wears away.

Some discoloration or wear of the rotor surface is normal and does not require resurfacing when linings are replaced. If cracks or burned spots are evident, the rotor must be replaced.

ROTOR MINIMUM THICKNESS

Measure rotor thickness at the center of the brake shoe contact surface. Replace the rotor if it is worn below minimum thickness or if machining the rotor will cause its thickness to fall below specifications.

CAUTION: Do not machine (turn) the rotor if it will cause the rotor to fall below minimum thickness.

Minimum thickness specifications are cast on the rotor's unmachined surface (Fig. 97) (or stamped into the hat section). Limits can also be found in this section's specification table. (Refer to 5 - BRAKES/HYDRAULIC/MECHANICAL/ROTOR - SPECIFICATIONS)

ROTOR THICKNESS VARIATION

Thickness variation in a rotor's braking surface can result in pedal pulsation, chatter and surge. This can also be caused by excessive runout in the rotor or the hub.

ROTOR (Continued)

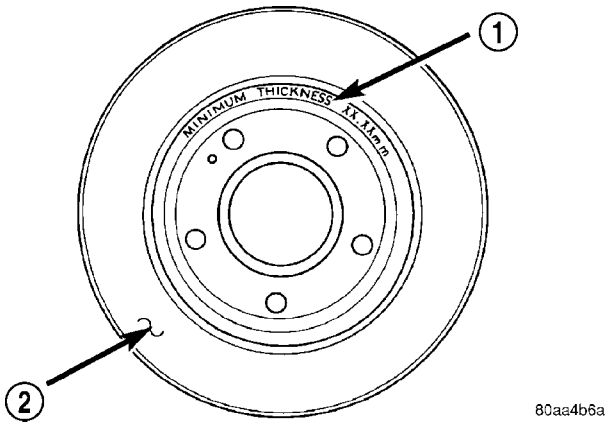

Fig. 97 Minimum Brake Rotor Thickness Markings (Typical)

1 - ROTOR MINIMUM THICKNESS MARKING
2 - ROTOR

Rotor thickness variation measurements should be made in conjunction with measuring runout. Measure thickness of the brake rotor at 12 equal points around the rotor braking surface with a micrometer at a radius approximately 25 mm (1 inch) from edge of rotor (Fig. 98). If thickness measurements vary beyond the specification listed in the specifaction table (Refer to 5 - BRAKES/HYDRAULIC/MECHANICAL/ROTOR - SPECIFICATIONS), the rotor should be refaced or replaced. (Refer to 5 - BRAKES/HYDRAULIC/MECHANICAL/ROTOR - STANDARD PROCEDURE)

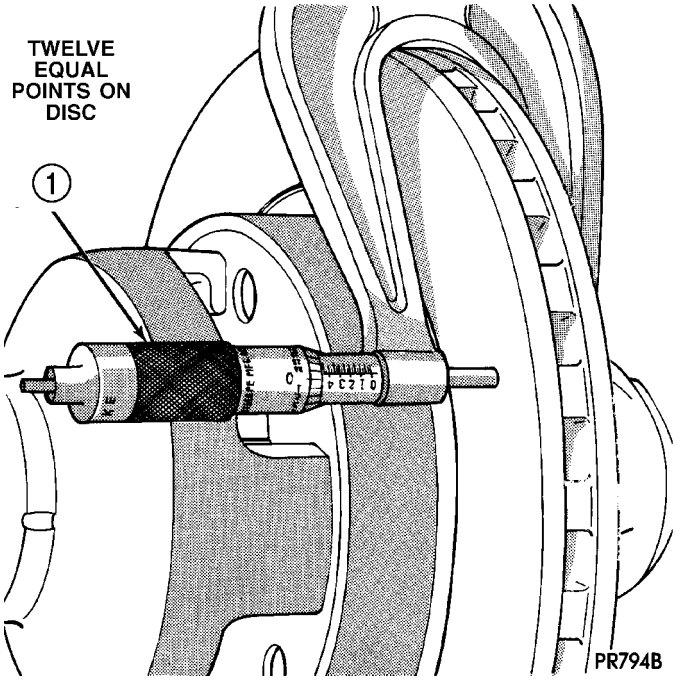

Fig. 98 Checking Rotor Thickness

1 - MICROMETER

ROTOR RUNOUT

On-vehicle rotor runout is the combination of the individual runout of the hub face and the runout of the rotor. (The hub and rotor runouts are separable). To measure rotor runout on the vehicle, first remove the tire and wheel assembly. Reinstall the wheel mounting nuts on the studs, tightening the rotor to the hub. Mount the Dial Indicator, Special Tool C-3339, with Mounting Adaptor, Special Tool SP-1910 on steering arm. The dial indicator plunger should contact braking surface of rotor approximately 25 mm (1 inch) from edge of rotor (Fig. 99). Check lateral runout on both sides of the rotor, marking the low and high spots on both. Runout limits can be found in the specification table in this section. (Refer to 5 - BRAKES/HYDRAULIC/MECHANICAL/ROTOR - SPECIFICATIONS)

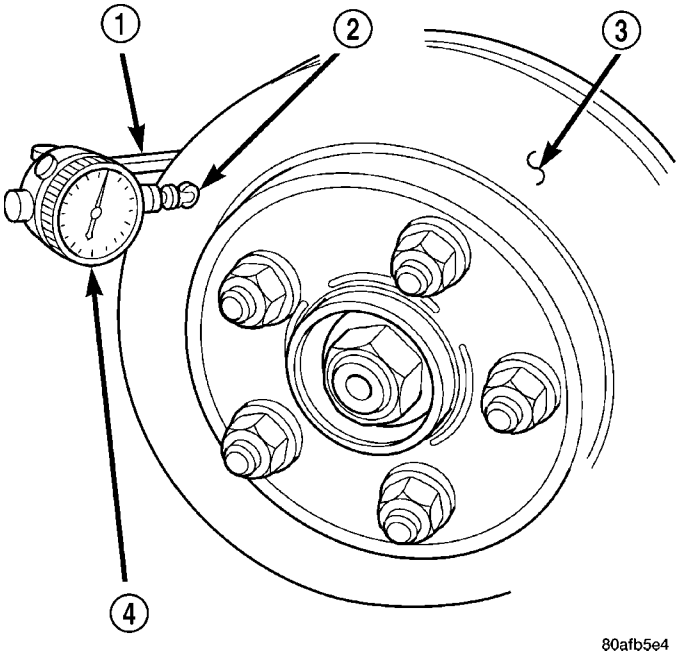

Fig. 99 Checking Rotor Runout

1 - SPECIAL TOOL SP-1910
2 - 25mm FROM EDGE
3 - DISC SURFACE
4 - SPECIAL TOOL C-3339

If runout is in excess of the specification, check the lateral runout of the hub face. Before removing the rotor from the hub, place a chalk mark across both the rotor and the one wheel stud closest to where the high runout measurement was taken. This way, the original mounting spot of the rotor on the hub is indexed (Fig. 100).

Remove the rotor from the hub.

NOTE: Clean the hub face surface before checking runout. This provides a clean surface to get an accurate indicator reading.

ROTOR (Continued)

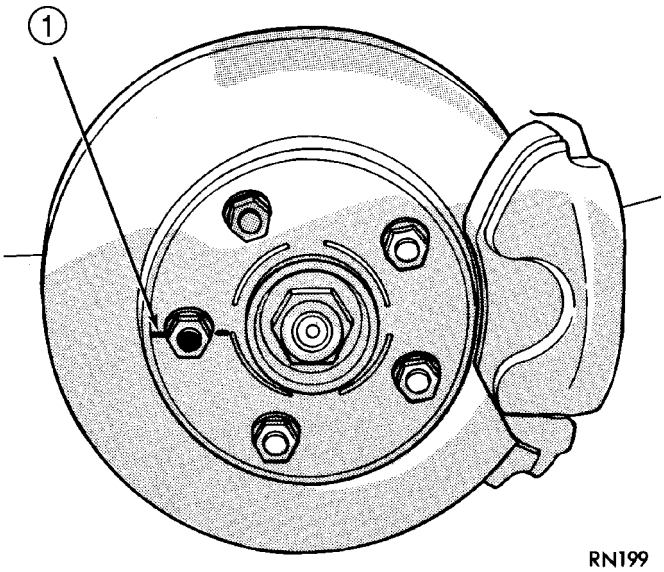

Fig. 100 Marking Rotor and Wheel Stud

1 - CHALK MARK

Mount Dial Indicator, Special Tool C-3339, and Mounting Adaptor, Special Tool SP-1910, to the steering knuckle. Position the indicator stem so it contacts the hub face near the outer diameter. Care must be taken to position stem outside of the stud circle, but inside of the chamfer on the hub rim (Fig. 101).

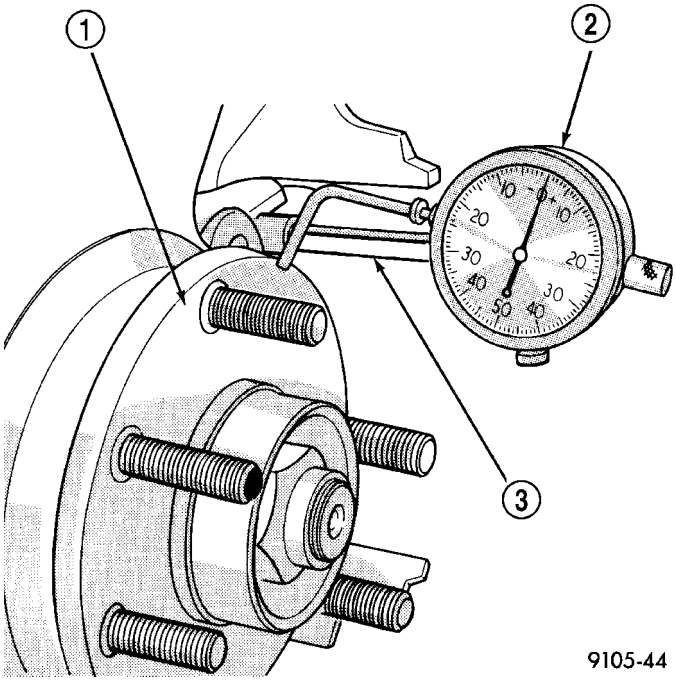

Fig. 101 Checking Hub Runout

1 - HUB SURFACE
2 - SPECIAL TOOL C-3339
3 - SPECIAL TOOL SP-1910

Hub runout should not exceed 0.08 mm (0.003 inch). If runout exceeds this specification, the hub must be replaced. For front hub removal, (Refer to 2 - SUSPENSION/FRONT/KNUCKLE - REMOVAL). For rear hub removal, (Refer to 2 - SUSPENSION/REAR/HUB / BEARING - REMOVAL).

If the hub runout does not exceed this specification, install the rotor back on the hub, aligning the chalk marks on the rotor with a wheel mounting stud, two studs apart from the original stud (Fig. 102). Tighten nuts in the proper sequence and torque to specifications.

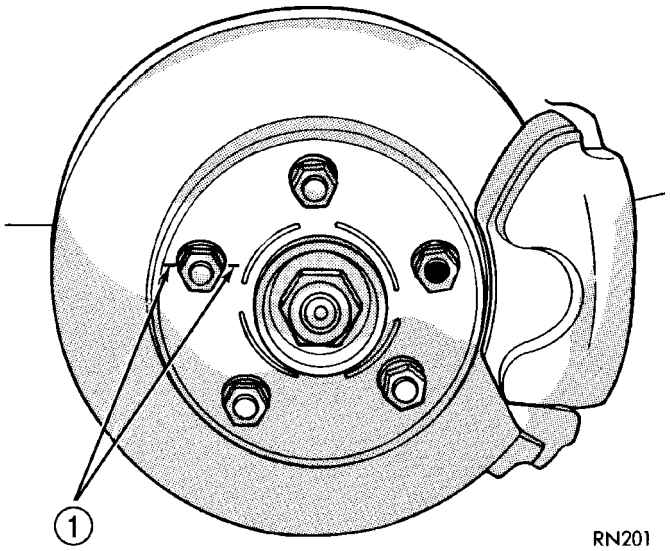

Fig. 102 Index Rotor And Wheel Stud

1 - CHALK MARK

Recheck brake rotor runout to see if the runout is now within specifications. (Refer to 5 - BRAKES/HYDRAULIC/MECHANICAL/ROTOR - SPECIFICATIONS)

If runout is not within specifications, reface or replace the brake rotor. (Refer to 5 - BRAKES/HYDRAULIC/MECHANICAL/ROTOR - STANDARD PROCEDURE)

STANDARD PROCEDURE - BRAKE ROTOR MACHINING

NOTE: Refacing the rotor is not required each time the brake pads are replaced, only when the need is foreseen.

Any servicing of the rotor requires extreme care to maintain the rotor within service tolerances to ensure proper brake action.

ROTOR (Continued)

If the rotor surface is deeply scored or warped, or there is a complaint of brake roughness or brake pedal pulsation, the rotor should be refaced using a hub-mounted on-car brake lathe (Fig. 103), or replaced.

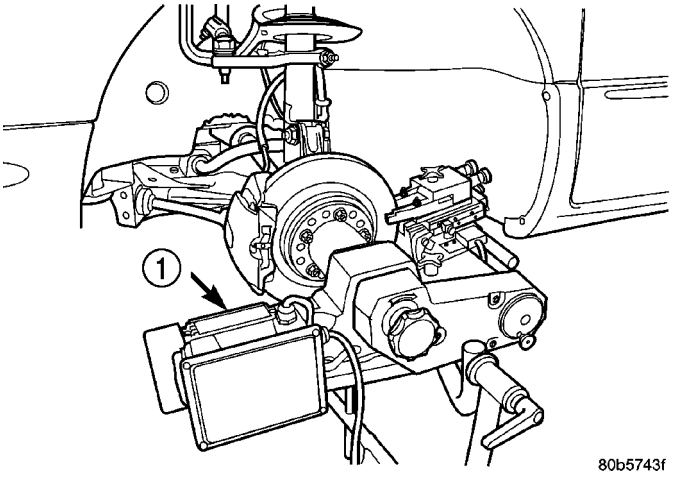

Fig. 103 On-Car Brake Lathe

1 - ON-CAR BRAKE LATHE

The use of a hub-mounted on-car brake lathe is highly recommended to eliminate the possibility of excessive runout. It trues the brake rotor to the vehicle's hub and bearing.

NOTE: All rotors have markings for minimum allowable thickness cast on an un-machined surface of the rotor (Fig. 104) or stamped into the hat section. Minimum thickness specifications can also be found in the specification table in this section. (Refer to 5 - BRAKES/HYDRAULIC/MECHANICAL/ ROTOR - SPECIFICATIONS)

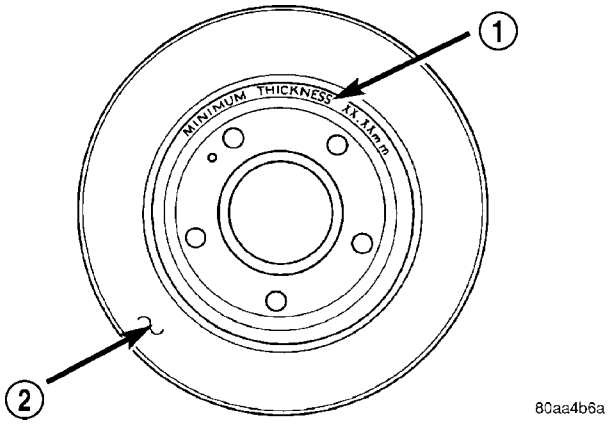

Fig. 104 Minimum Brake Rotor Thickness (Typical)

1 - ROTOR MINIMUM THICKNESS MARKING
2 - ROTOR

Minimum allowable thickness is the minimum thickness which the brake rotor machined surface may be cut to.

CAUTION: Do not machine the rotor if it will cause the rotor to fall below minimum thickness.

Before lathe installation, verify the brake rotor face and the hub adapters are free of any chips, rust, or contamination.

When mounting and using the brake lathe, strict attention to the brake lathe manufacturer's operating instructions is required.

Machine both sides of the brake rotor at the same time. Cutting both sides at the same time minimizes the possibility of a tapered or uneven cut.

When refacing a rotor, the required TIR (Total Indicator Reading) and thickness variation limits MUST BE MAINTAINED. Extreme care in the operation of rotor turning equipment is required. Specifications for brake rotor machining can be found in this sections specification table. (Refer to 5 - BRAKES/HYDRAULIC/MECHANICAL/ROTOR - SPECIFICATIONS)

REMOVAL

REMOVAL - FRONT BRAKE ROTOR

NOTE: Before proceeding, (Refer to 5 - BRAKES - WARNING)(Refer to 5 - BRAKES - CAUTION).

(1) Raise the vehicle. (Refer to LUBRICATION & MAINTENANCE/HOISTING - STANDARD PROCEDURE)

(2) Remove the front tire and wheel assembly.

(3) Slide the caliper outward in an effort to retract the caliper piston into its bore.

(4) Remove the two bolts securing disc brake caliper adapter to the steering knuckle (Fig. 105).

(5) Remove the disc brake caliper and adapter from the knuckle as an assembly. Hang the assembly out of the way using wire or a bungee cord. Use care not to overextend the brake hose when doing this.

(6) Remove the clips retaining the brake rotor to the wheel studs.

(7) Remove the brake rotor.

REMOVAL - REAR BRAKE ROTOR

NOTE: Before proceeding, (Refer to 5 - BRAKES - WARNING)(Refer to 5 - BRAKES - CAUTION).

(1) Raise the vehicle. (Refer to LUBRICATION & MAINTENANCE/HOISTING - STANDARD PROCEDURE)

ROTOR (Continued)

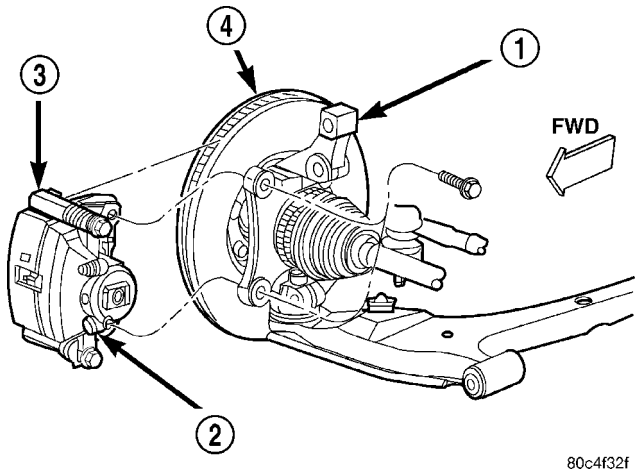

Fig. 105 Caliper/Adapter Mounting

1 - STEERING KNUCKLE
2 - DISC BRAKE CALIPER
3 - DISC BRAKE CALIPER ADAPTER
4 - BRAKE ROTOR

(2) Remove the rear tire and wheel assembly.

(3) Remove the rear disc brake caliper and shoes from the brake rotor and store out of the way. (Refer to 5 - BRAKES/HYDRAULIC/MECHANICAL/ BRAKE PADS/SHOES - REMOVAL)

(4) Remove any clips retaining the brake rotor (Fig. 20).

(5) Remove the brake rotor by pulling it straight off the wheel mounting studs.

INSTALLATION

INSTALLATION - FRONT BRAKE ROTOR

CAUTION: When installing new brake components, be sure to use correct parts. Parts designed for BR4 Performance Brake System must not be mixed with other brake systems. These parts, similar in appearance, can be easily identified (Fig. 95).(Refer to 5 - BRAKES/HYDRAULIC/MECHANICAL/ROTOR - DESCRIPTION)

NOTE: Inspect disc brake shoes before installation. (Refer to 5 - BRAKES/HYDRAULIC/MECHANICAL/ BRAKE PADS/SHOES - INSPECTION)

(1) Install the brake rotor over the studs on the hub.

(2) Install the disc brake caliper and adapter assembly over the brake rotor.

(3) Install the mounting bolts securing the caliper adapter to the steering knuckle (Fig. 105). Tighten the bolts to a torque of 104 N·m (77 ft. lbs.).

(4) Install the tire and wheel assembly. Tighten the wheel mounting nuts to a torque of 135 N·m (100 ft. lbs.).

(5) Lower the vehicle.

(6) Pump the brake pedal several times before moving the vehicle to set the shoes to the brake rotor.

(7) Road test the vehicle and make several stops to seat the brake shoes to the rotor.

INSTALLATION - REAR BRAKE ROTOR

CAUTION: When installing new brake components, be sure to use correct parts. Parts designed for BR4 Performance Brake System must not be mixed with other brake systems. These parts, similar in appearance, can be easily identified (Fig. 96).(Refer to 5 - BRAKES/HYDRAULIC/MECHANICAL/ROTOR - DESCRIPTION)

NOTE: Inspect disc brake shoes and parking brake shoes before installation. (Refer to 5 - BRAKES/HY-DRAULIC/MECHANICAL/BRAKE PADS/SHOES - INSPECTION)

(1) Install the rear brake rotor over the wheel mounting studs and onto the hub (Fig. 20).

(2) Install rear disc brake caliper and shoes. (Refer to 5 - BRAKES/HYDRAULIC/MECHANICAL/ BRAKE PADS/SHOES - INSTALLATION)

(3) Install the tire and wheel assembly. Tighten the wheel mounting nuts to a torque of 135 N·m (100 ft. lbs.).

(4) Adjust the parking brake shoes as necessary. (Refer to 5 - BRAKES/PARKING BRAKE/SHOES - ADJUSTMENTS)

(5) Lower the vehicle.

(6) Pump the brake pedal before moving the vehicle to set the brake shoes to the brake rotor.

SPECIFICATIONS

BRAKE ROTOR LIMITS/SPECIFICATIONS

NOTE: When refacing a rotor, the required TIR (Total Indicator Reading) and thickness variation limits MUST BE MAINTAINED.

ROTOR (Continued)

BRB/BRT SALES CODE

Braking Rotor	Rotor Thickness	Minimum Rotor Thickness	Rotor Thickness Variation	Rotor Runout*
Front Rotor	22.91–23.10 mm 0.902–0.909 in.	21.40 mm 0.843 in.	0.010 mm 0.0004 in.	0.13 mm 0.005 in.
Rear Rotor	8.75–9.25 mm 0.344–0.364 in.	7.25 mm 0.285 in.	0.013 mm 0.0005 in.	0.13 mm 0.005 in.
* TIR Total Indicator Reading (Measured On Vehicle)				

BR4 SALES CODE

Braking Rotor	Rotor Thickness	Minimum Rotor Thickness	Rotor Thickness Variation	Rotor Runout*
Front Rotor	27.91–28.10 mm 1.099–1.106 in.	26.40 mm 1.039 in.	0.010 mm 0.0004 in.	0.13 mm 0.005 in.
Rear Rotor	11.75–12.25 mm 0.463–0.482 in.	10.25 mm 0.404 in.	0.013 mm 0.0005 in.	0.13 mm 0.005 in.
* TIR Total Indicator Reading (Measured On Vehicle)				

SUPPORT PLATE - DRUM BRAKES

REMOVAL

NOTE: Before proceeding, (Refer to 5 - BRAKES - WARNING)(Refer to 5 - BRAKES - CAUTION).

(1) Using a brake pedal holding tool as shown (Fig. 106), depress the brake pedal past its first one inch of travel and hold it in this position. This will isolate the master cylinder from the brake hydraulic system and will not allow the brake fluid to drain out of the master cylinder reservoir.

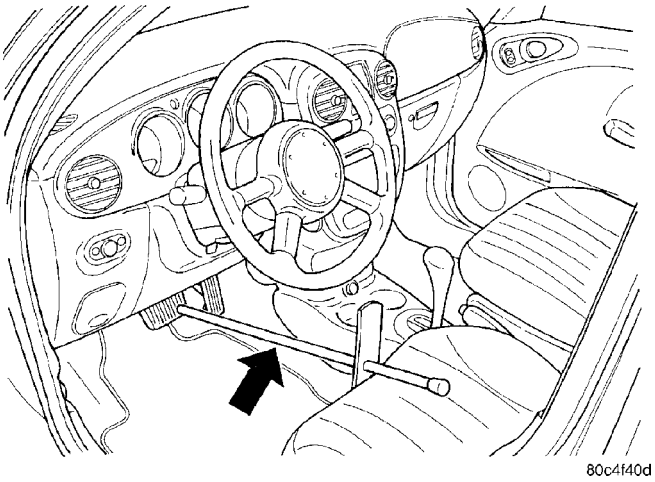

Fig. 106 Brake Pedal Holding Tool

(2) Raise the vehicle. (Refer to LUBRICATION & MAINTENANCE/HOISTING - STANDARD PROCEDURE)

(3) Remove the rear tire and wheel assembly.

(4) Disconnect the rear brake flex hose from the wheel cylinder (Fig. 107).

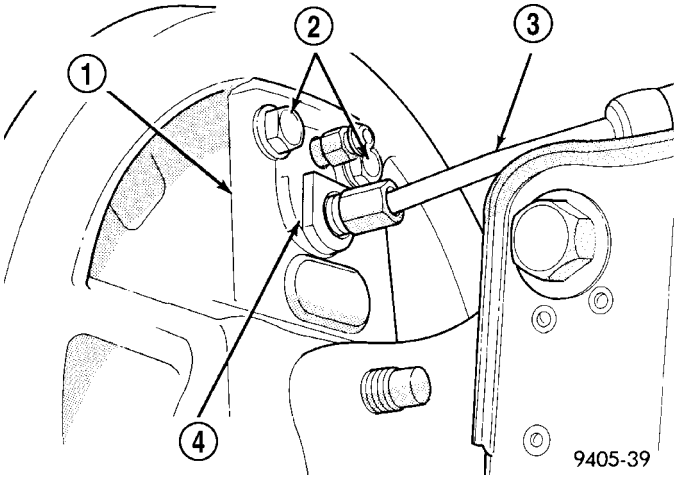

Fig. 107 Brake Flex Hose At Wheel Cylinder

1 - BRAKE SUPPORT PLATE
2 - WHEEL CYLINDER ATTACHING BOLTS
3 - REAR BRAKE FLEX HOSE TUBE
4 - WHEEL CYLINDER ASSEMBLY

(5) Remove the rear brake drum (Fig. 108).

(6) Remove the dust cap from the rear hub and bearing (Fig. 108).

SUPPORT PLATE - DRUM BRAKES (Continued)

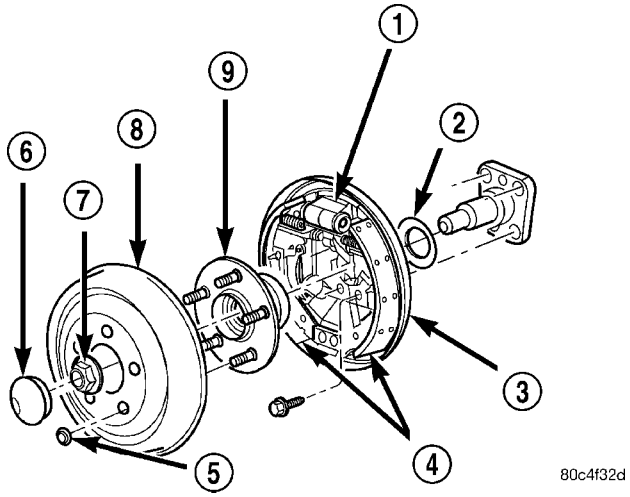

Fig. 108 Hub And Bearing/Rear Brakes

1 - WHEEL CYLINDER
2 - SEAL
3 - SUPPORT PLATE
4 - BRAKE SHOES
5 - RETAINER CLIP
6 - DUST CAP
7 - NUT
8 - DRUM
9 - HUB AND BEARING

(7) Remove the nut holding the rear hub and bearing to the spindle (Fig. 108). Remove the hub and bearing from the spindle.

(8) Remove the rear brake shoes from the brake support plate. (Refer to 5 - BRAKES/HYDRAULIC/MECHANICAL/BRAKE PADS/SHOES - REMOVAL)

(9) Remove the parking brake actuator lever from the parking brake cable.

(10) Position a ½ inch wrench over the retainer fingers on the end of the parking brake cable (Fig. 109). Compress the cable housing retaining fingers with the wrench, then pull the cable housing out of the support plate. Remove the wrench as the parking brake cable retainer is freed from the mounting hole in the brake support plate.

(11) Remove the 4 brake support plate mounting bolts and washers. Separate brake support plate from spindle.

(12) Remove the brake wheel cylinder attaching bolts.

(13) Remove the brake wheel cylinder from the brake support plate.

(14) Remove old sealer from wheel cylinder mounting surfaces.

INSTALLATION

(1) Apply a bead of fresh Mopar® RTV sealer or equivalent around the mating surface of the wheel cylinder and brake support plate.

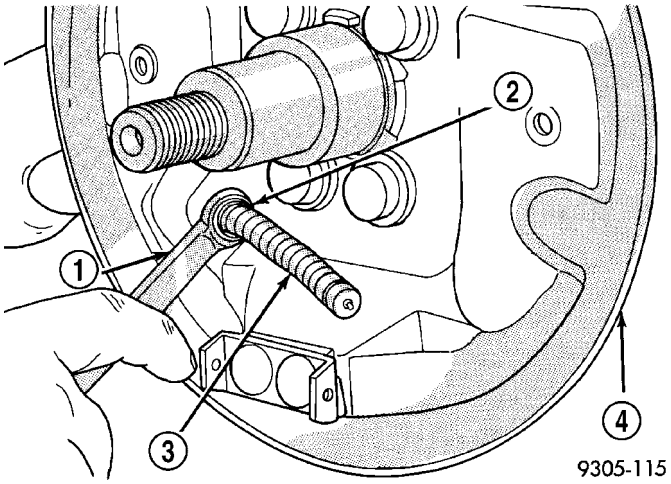

Fig. 109 Removing Park Brake Cable From Support Plate

1 - WRENCH
2 - CABLE HOUSING RETAINER
3 - PARK BRAKE CABLE
4 - SUPPORT PLATE

NOTE: Once sealer is applied, install the wheel cylinder within several minutes to avoid excessive hardening of the sealer before installation.

NOTE: When installing wheel cylinder on brake support plate, be sure it is positioned squarely (horizontal) to the brake support plate.

(2) Install the wheel cylinder onto brake support plate. Tighten the attaching bolts to a torque of 13 N·m (115 in. lbs.).

NOTE: When performing the following step, use new mounting bolts or clean and apply Mopar® Stud & Bearing Mount Adhesive or equivalent to the original mounting bolt threads before reuse.

(3) Install the brake support plate and seal on spindle. Tighten the support plate mounting bolts to a torque of 95 N·m (70 ft. lbs.).

(4) Insert the parking brake cable into its mounting hole in the brake support plate. Push the cable housing in until the retainer's fingers lock into place.

(5) Hand start the brake flex hose tube fitting to the wheel cylinder. Tighten the tube nut to a torque of 17 N·m (145 in. lbs.).

(6) Attach the parking brake cable to the parking brake actuator.

(7) Install the rear brake shoe assemblies on the brake support plate. (Refer to 5 - BRAKES/HYDRAULIC/MECHANICAL/BRAKE PADS/SHOES - INSTALLATION)

SUPPORT PLATE - DRUM BRAKES (Continued)

(8) Install the rear hub and bearing assembly on the spindle. Install a new hub and bearing retaining nut (Fig. 108). Tighten the retaining nut to a torque of 217 N·m (160 ft. lbs.). Install dust cap.

(9) Adjust the brake shoes to the drum diameter using a brake shoe gauge. (Refer to 5 - BRAKES/HYDRAULIC/MECHANICAL/BRAKE PADS/SHOES - ADJUSTMENT)

(10) Install the brake drum (Fig. 108).

(11) Install the wheel and tire assembly. Tighten the wheel mounting nuts to a torque of 135 N·m (100 ft. lbs.).

(12) Lower the vehicle.

(13) Remove the brake pedal holding tool.

(14) Bleed the affected wheel cylinder as necessary. (Refer to 5 - BRAKES - STANDARD PROCEDURE)

(15) Road test the vehicle to ensure proper brake operation.

WHEEL CYLINDER - DRUM BRAKE

REMOVAL

NOTE: Before proceeding, (Refer to 5 - BRAKES - WARNING)(Refer to 5 - BRAKES - CAUTION).

(1) Using a brake pedal holder, depress the brake pedal past its first one inch of travel and hold it in this position (Fig. 110). This will isolate the master cylinder from the brake hydraulic system and will not allow the brake fluid to drain out of the master cylinder reservoir.

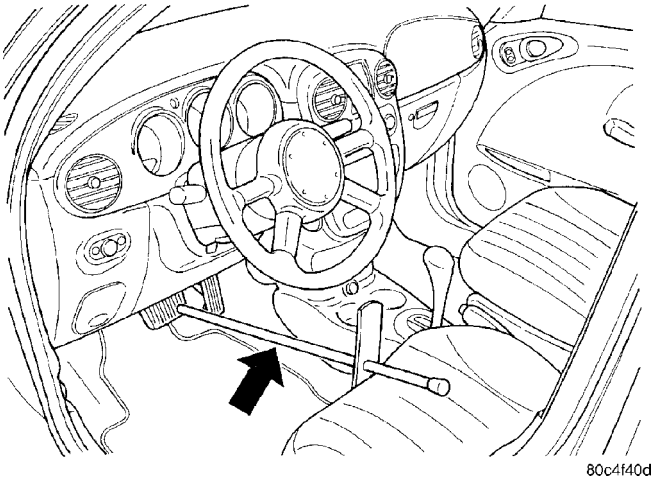

Fig. 110 Brake Pedal Holder

(2) Raise the vehicle. (Refer to LUBRICATION & MAINTENANCE/HOISTING - STANDARD PROCEDURE)

(3) Remove the rear tire and wheel assembly.

(4) Disconnect the rear brake flex hose from the wheel cylinder (Fig. 111).

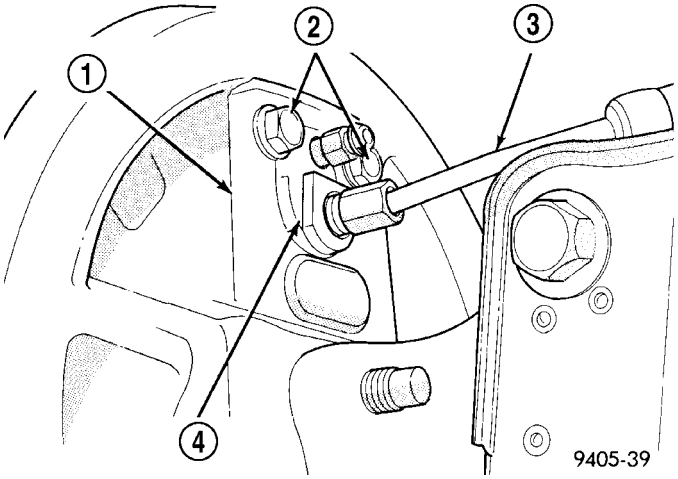

Fig. 111 Brake Hose And Wheel Cylinder Mounting

1 - BRAKE SUPPORT PLATE
2 - WHEEL CYLINDER ATTACHING BOLTS
3 - REAR BRAKE FLEX HOSE TUBE
4 - WHEEL CYLINDER ASSEMBLY

(5) Remove the rear brake drum (Fig. 112).

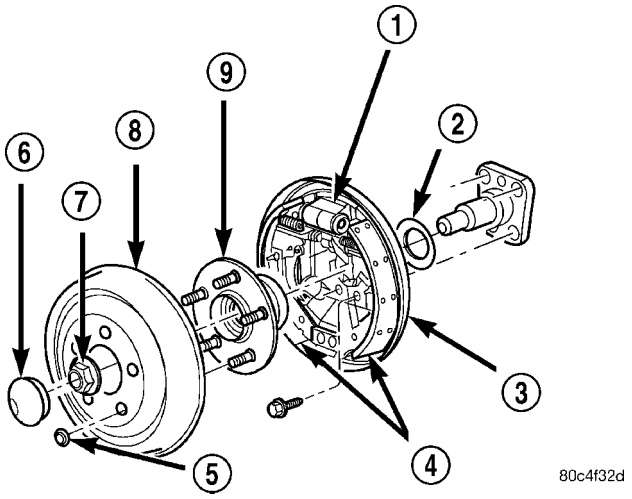

Fig. 112 Drum Brakes

1 - WHEEL CYLINDER
2 - SEAL
3 - SUPPORT PLATE
4 - BRAKE SHOES
5 - RETAINER CLIP
6 - DUST CAP
7 - NUT
8 - DRUM
9 - HUB AND BEARING

(6) Remove the rear brake shoes from the brake support plate. (Refer to 5 - BRAKES/HYDRAULIC/MECHANICAL/BRAKE PADS/SHOES - REMOVAL)

NOTE: If the brake shoes are wet with grease or brake fluid, replace them.

WHEEL CYLINDER - DRUM BRAKE (Continued)

(7) Remove the brake wheel cylinder attaching bolts (Fig. 111).

(8) Remove the brake wheel cylinder from the brake support plate.

(9) Remove old sealer from mounting surfaces.

INSPECTION

With the brake drums removed, inspect the wheel cylinder boots for evidence of a brake fluid leak. Visually check the boots for cuts, tears, or heat cracks. If any of these conditions exist, the wheel cylinders should be completely cleaned, inspected and new parts installed.

If a wheel cylinder is leaking and the brake lining material is saturated with brake fluid, the brake shoes must be replaced.

INSTALLATION

(1) Apply a bead of fresh Mopar® RTV sealer or equivalent around the mating surface of the wheel cylinder and brake support plate.

NOTE: Once sealer is applied, install the wheel cylinder within several minutes to avoid excessive hardening of the sealer before installation.

NOTE: When installing wheel cylinder on brake support plate, be sure it is positioned squarely (horizontal) to the brake assembly.

(2) Install the wheel cylinder onto brake support plate (Fig. 111). Tighten the attaching bolts to a torque of 13 N·m (115 in. lbs.).

(3) Hand start the rear brake flex hose tube fitting to wheel cylinder. Tighten the tube nut to a torque of 17 N·m (145 in. lbs.).

(4) Install the rear brake shoes on the brake support plate. (Refer to 5 - BRAKES/HYDRAULIC/MECHANICAL/BRAKE PADS/SHOES - INSTALLATION)

(5) Adjust the rear brakes. (Refer to 5 - BRAKES/HYDRAULIC/MECHANICAL/BRAKE PADS/SHOES - ADJUSTMENTS)

(6) Install the brake drum onto the rear hub (Fig. 112).

(7) Install the tire and wheel assembly. Progressively tighten the wheel mounting nuts to a torque of 135 N·m (100 ft. lbs.).

(8) Lower the vehicle.

(9) Remove the brake pedal holder.

(10) Bleed the wheel cylinder as necessary. (Refer to 5 - BRAKES - STANDARD PROCEDURE)

(11) Road test the vehicle to make sure the brakes operate correctly.

PARKING BRAKE

DESCRIPTION

The parking brakes consist of the following components:

- Hand-operated park brake lever - automatic-adjusting
- Parking brake cables (2)
- Actuation levers and struts
- Duo-servo parking brake assembly (rear disc only)

All vehicles are equipped with a center-mounted, hand-operated parking brake lever mounted between the front seats (Fig. 113). This lever is an automatic-adjusting type that continuously applies minimal tension to the parking brake cables to keep them in adjustment at all times.

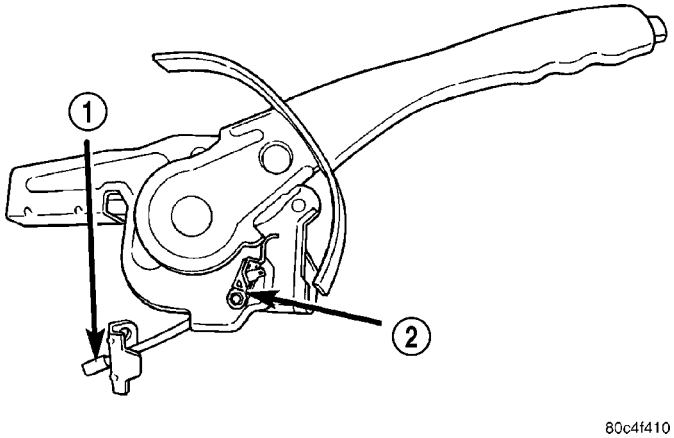

Fig. 113 Parking Brake Lever

1 - OUTPUT CABLE
2 - SWITCH

The parking brake lever has a short output cable with an equalizer bracket attached to it that connects to the parking brake cables (Fig. 113). The output cable can only be serviced as part of the parking brake lever.

There is an individual parking brake cable for each rear wheel that joins a parking brake cable equalizer, attached to the parking brake lever, to the rear parking brakes. The parking brake cables are made of flexible steel cable. Both drum rear brakes and disc rear brakes use the same parking brake cable configuration, but the cables are different.

On vehicles equipped with rear drum brakes, the rear wheel service brakes also act as the vehicle's parking brakes. The rear drum brake shoes, when acting as parking brakes, are mechanically operated using an internal actuating lever and strut connected to the flexible steel parking brake cable.

PARKING BRAKE (Continued)

The parking brakes on vehicles equipped with rear disc brakes consist of a small duo-servo brake assembly mounted to the disc brake caliper adapter (Fig. 114). The hat (center) section of the rear brake rotor serves as the braking surface (drum) for the parking brakes (Fig. 115). This parking brake application uses the same operating cable configuration as the drum brake equipped vehicles, but different cables.

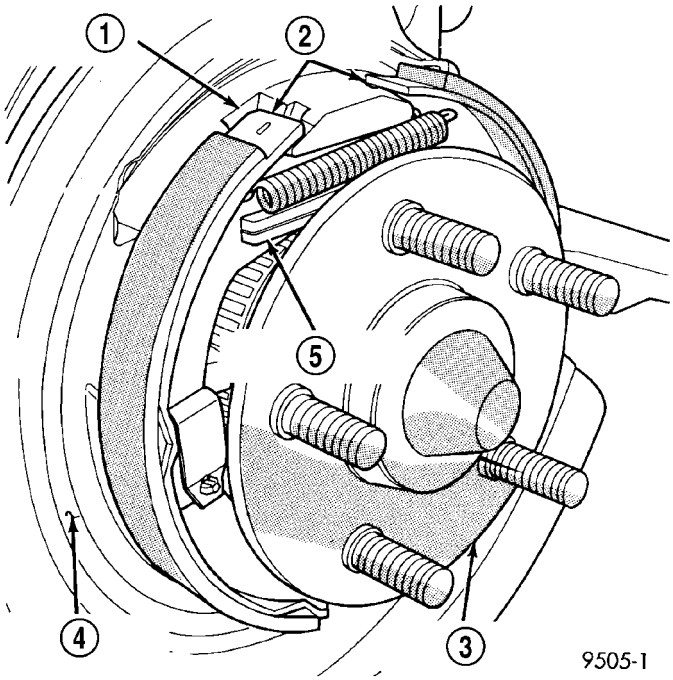

Fig. 114 Parking Brake Assembly With Rear Disc Brakes

1 - DISC BRAKE ADAPTER
2 - PARKING BRAKE BRAKE SHOES
3 - HUB/BEARING ASSEMBLY
4 - BRAKING DISC STONE SHIELD
5 - PARKING BRAKE ACTUATING STRUT

OPERATION

When the parking brake is applied, the equalizer bracket on the lever output cable pulls on both parking brake cables, thus applying the brake shoes (rear drum brakes) or parking brake shoes (rear disc brakes).

The brake shoes are mechanically operated by an internal lever and strut connected to the parking brake cables.

The parking brake lever automatic-adjusting feature continuously applies minimal tension to the parking brake cables to keep them in adjustment at all times. Therefore, the parking brake cable system does not require adjustment. Proper parking brake system adjustment is obtained by proper drum brake or drum-in-hat brake shoe adjustment. When service is needed, the lever auto-adjust mechanism must be reloaded and locked out before service can be performed.

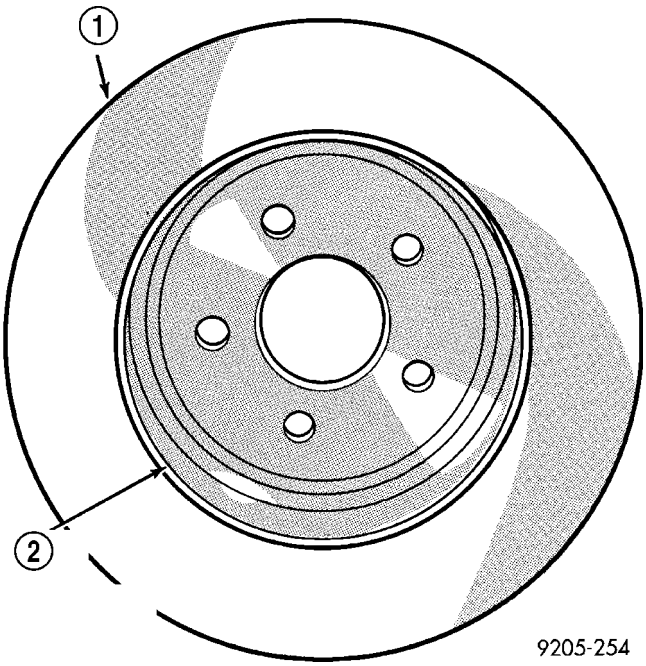

Fig. 115 Drum-In-Hat Brake Rotor

1 - REAR BRAKE ROTOR
2 - HAT SECTION OF ROTOR (PARKING BRAKE BRAKING SURFACE)

STANDARD PROCEDURE - PARKING BRAKE AUTOMATIC ADJUSTER LOCKOUT

WARNING: THE AUTOMATIC ADJUSTING FEATURE OF THIS PARKING BRAKE LEVER CONTAINS A CLOCKSPRING LOADED TO APPROXIMATELY 19 POUNDS. DO NOT RELEASE THE AUTOMATIC ADJUSTER LOCKOUT DEVICE UNLESS THE REAR PARKING BRAKE CABLES AND EQUALIZER ARE CONNECTED TO THE LEVER OUTPUT CABLE. KEEP HANDS OUT OF AUTOMATIC ADJUSTER SECTOR AND PAWL AREA. FAILURE TO OBSERVE CAUTION IN HANDLING THIS MECHANISM COULD LEAD TO SERIOUS INJURY.

WARNING: WHEN REPAIRS TO THE PARKING BRAKE LEVER OR CABLES ARE REQUIRED, THE AUTOMATIC ADJUSTER MUST BE LOADED AND LOCKED OUT TO AVOID POSSIBLE INJURY.

LOCKING AUTOMATIC ADJUSTER OUT

(1) Block the tire and wheels so the vehicle does not move once the vehicle parking brake lever is released.

(2) Remove the transmission shift knob as necessary.

(3) Place parking brake lever in released (full OFF) position.

PARKING BRAKE (Continued)

(4) Remove the screws attaching the center console.

(5) Remove rear window switch panel from the console.

(6) Working through switch opening, grasp a parking brake cable or equalizer and pull back approximately 25.4 mm (1 in.)

(7) While holding the cable or equalizer, pull the parking brake handle to it's full upright position.

(8) Remove center console.

(9) Grasp the parking brake lever output cable by hand and pull upward. Continue pulling cable until an appropriate pin punch (drill bit or locking pin) can be inserted sufficiently through hole in left side of the lever mounting bracket (Fig. 116). This will lock the parking brake automatic adjustment mechanism in place and take tension off the parking brake cables. Slowly release the output cable. There should now be slack in the cables.

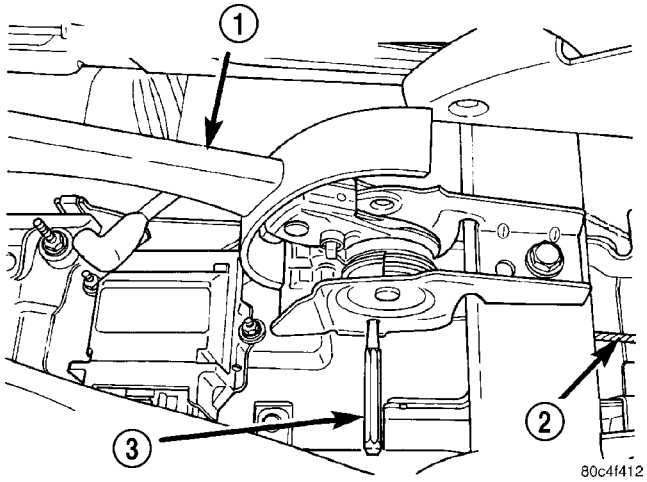

Fig. 116 Pin Punch Installed

1 - PARKING BRAKE LEVER
2 - OUTPUT CABLE
3 - PIN PUNCH

UNLOCKING AUTOMATIC ADJUSTER (UNLOADING)

(1) Be sure the rear parking brake cables are both properly installed in the equalizer.

(2) Raise parking brake handle to the full upright position.

(3) Keeping your hands clear of the automatic adjuster sector and pawl area, firmly grasp the parking brake lever pin punch (drill bit or locking pin if a new mechanism has been installed) (Fig. 116), then quickly remove it from the parking brake lever mechanism. This will allow the park brake lever mechanism to automatically adjust the parking brake cables.

(4) Install the center console and its mounting screws.

(5) Cycle the parking brake lever once to position the parking brake cables, then return the parking brake lever to its released (full OFF) position.

(6) Check the rear wheels of the vehicle. They should rotate freely without dragging with the lever in its released (full OFF) position.

(7) Install rear window switch panel.

(8) Remove the blocks from the tire and wheels.

CABLE - PARKING BRAKE

REMOVAL

WARNING: THE AUTOMATIC ADJUSTING FEATURE OF THIS PARKING BRAKE LEVER CONTAINS A CLOCK SPRING LOADED TO APPROXIMATELY 19 POUNDS. DO NOT RELEASE THE AUTOMATIC ADJUSTER LOCKOUT DEVICE UNLESS THE REAR PARKING BRAKE CABLES AND EQUALIZER ARE CONNECTED TO THE LEVER OUTPUT CABLE. KEEP HANDS OUT OF AUTOMATIC ADJUSTER SECTOR AND PAWL AREA. FAILURE TO OBSERVE CAUTION IN HANDLING THIS MECHANISM COULD LEAD TO SERIOUS INJURY.

WARNING: WHEN REPAIRS TO THE PARKING BRAKE LEVER OR CABLES ARE REQUIRED, THE AUTOMATIC ADJUSTER MUST BE LOADED AND LOCKED OUT TO AVOID POSSIBLE INJURY. THE LEVER ADJUSTMENT MECHANISM CAN BE LOADED AND LOCKED OUT AS OUTLINED IN THIS PROCEDURE.

WARNING: THE AIRBAG SYSTEM IS A COMPLEX ELECTROMECHANICAL UNIT. BEFORE ATTEMPTING TO SERVICE ANY COMPONENT NEAR THE OCCUPANT RESTRAINT CONTROLLER (ORC), FIRST DISCONNECT AND ISOLATE THE BATTERY NEGATIVE CABLE. ALLOW THE SYSTEM CAPACITOR TO DISCHARGE FOR TWO (2) MINUTES. FAILURE TO DO THIS COULD RESULT IN ACCIDENTAL AIRBAG DEPLOYMENT AND POSSIBLE PERSONAL INJURY.

NOTE: Before proceeding, (Refer to 5 - BRAKES - WARNING)(Refer to 5 - BRAKES - CAUTION).

NOTE: The procedure below applies to either of the two rear parking brake cables.

(1) Unclip the air cleaner cover (two clips) and move the cover aside.

CABLE - PARKING BRAKE (Continued)

(2) Disconnect and isolate the battery negative cable from its post on the battery.

(3) Block the tire and wheels so the vehicle does not move once the vehicle parking brake lever is released.

(4) Remove the transmission shift knob as necessary.

(5) Place parking brake lever in released (full OFF) position.

(6) Remove screws attaching center console.

(7) Remove rear window switch panel from console.

(8) Working through switch opening, grasp a parking brake cable or equalizer and pull back approximately 25.4 mm (1 in.)

(9) While holding the cable or equalizer, pull the parking brake handle to it's full upright position.

(10) Remove center console.

(11) Grasp the parking brake lever output cable by hand and pull upward. Continue pulling on the cable until an appropriate sized pin punch (drill bit or locking pin) can be inserted sufficiently through the hole in the left side of the lever mounting bracket (Fig. 117). This will lock the parking brake automatic adjustment mechanism in place and take tension off the parking brake cables. Slowly release the output cable. There should now be slack in the cables.

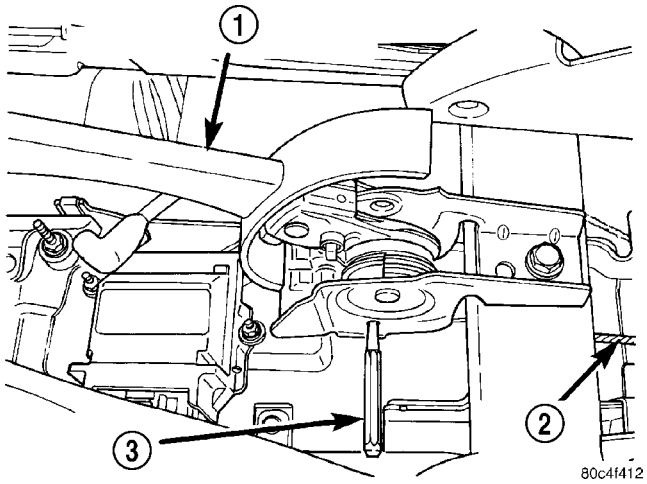

Fig. 117 Pin Punch Installed

1 - PARKING BRAKE LEVER
2 - OUTPUT CABLE
3 - PIN PUNCH

(12) Remove the rear parking brake cables from the parking brake cable equalizer (Fig. 118).

(13) Remove the rear seat cushion from the vehicle.

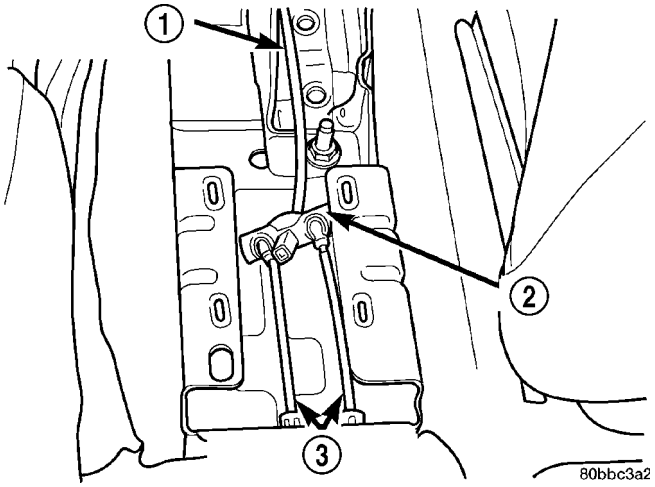

Fig. 118 Parking Brake Cables At Equalizer

1 - LEVER OUTPUT CABLE
2 - EQUALIZER
3 - REAR PARKING BRAKE CABLES

(14) Fold the rear carpeting forward to expose the parking brake cables at the end of the rear floor.

(15) Install the box end of a ½ inch wrench over the parking brake cable retainer (Fig. 119). Push the wrench onto the retainer until the retainer fingers are collapsed. From under the carpeting, grasp the parking brake cable housing and pull cable straight out of the bracket attached to the floor.

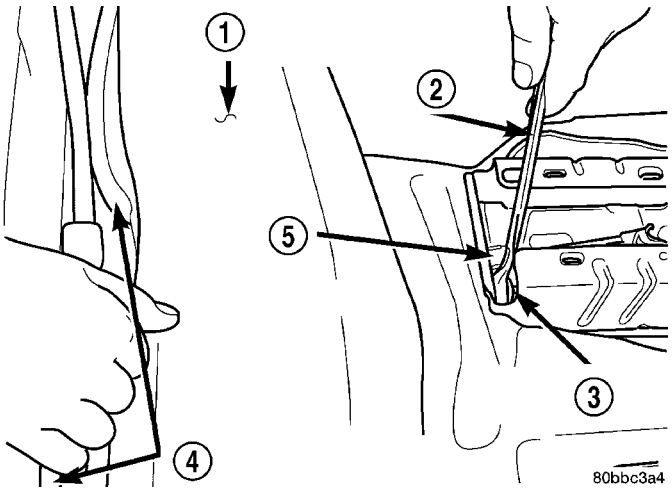

Fig. 119 Compressing Cable Retainer

1 - CARPET ROLLED FORWARD
2 - WRENCH
3 - RIGHT REAR CABLE
4 - REAR PARKING BRAKE CABLES
5 - LEFT REAR CABLE

CABLE - PARKING BRAKE (Continued)

(16) Raise the vehicle. (Refer to LUBRICATION & MAINTENANCE/HOISTING - STANDARD PROCEDURE)

(17) Remove the rear tire and wheel assembly from the vehicle.

(18) On vehicles equipped with rear drum brakes, remove the brake drum. (Refer to 5 - BRAKES/HYDRAULIC/MECHANICAL/DRUM - REMOVAL)

(19) On vehicles equipped with rear disc brakes:

- Remove the disc brake caliper guide pin bolts, then the caliper from the disc brake adapter (Fig. 120).
- Hang the caliper out of the way using a wire hanger or cord.
- Remove the brake rotor from the rear hub and bearing.

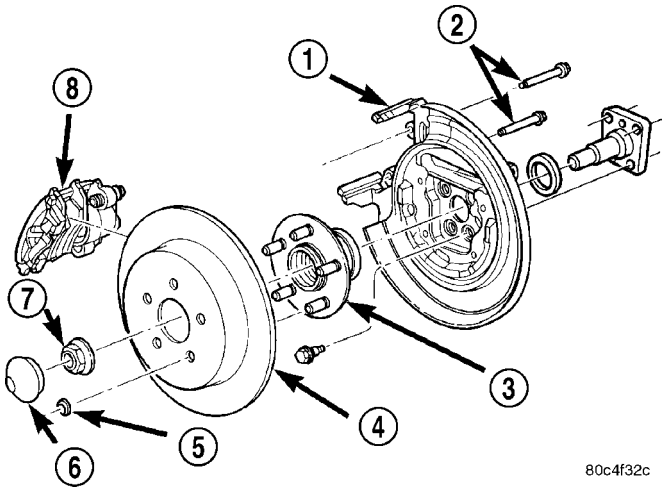

Fig. 120 Rear Disc Brakes

1 - DISC BRAKE ADAPTER
2 - GUIDE PIN BOLTS
3 - HUB AND BEARING
4 - BRAKE ROTOR
5 - RETAINER CLIP
6 - DUST CAP
7 - NUT
8 - DISC BRAKE CALIPER

(20) Remove the dust cap from the rear hub and bearing.

(21) Remove the hub and bearing retaining nut from the knuckle spindle, then remove the hub and bearing (Fig. 120).

(22) On vehicles equipped with rear disc brakes, remove the upper return spring, both shoe hold-down clips, then spread the rear parking brake shoes apart at the top enough to clear the shoe anchor and remove the parking brake shoes as an assembly from the disc brake adapter (Fig. 121).

(23) To remove the rear parking brake cable from the brake support plate on vehicles equipped with rear drum brakes:

- Remove the parking brake cable from the parking brake actuating lever (Fig. 122).

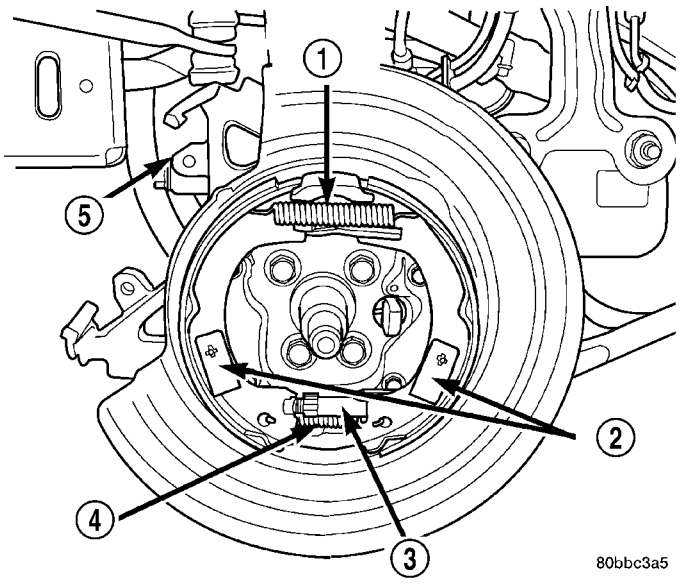

Fig. 121 Parking Brake Shoes

1 - UPPER RETURN SPRING
2 - SHOE HOLD DOWN CLIPS
3 - ADJUSTER
4 - LOWER REAR SPRING
5 - DISC BRAKE ADAPTER

- Remove the actuating spring between the brake shoe adjustment lever and the brake shoe (Fig. 123).
- Remove the parking brake cable from the rear brake support plate. The parking brake cable can be removed from brake support plate using a ½ inch box wrench to compress the locking fingers on the parking brake cable retainer (Fig. 124).

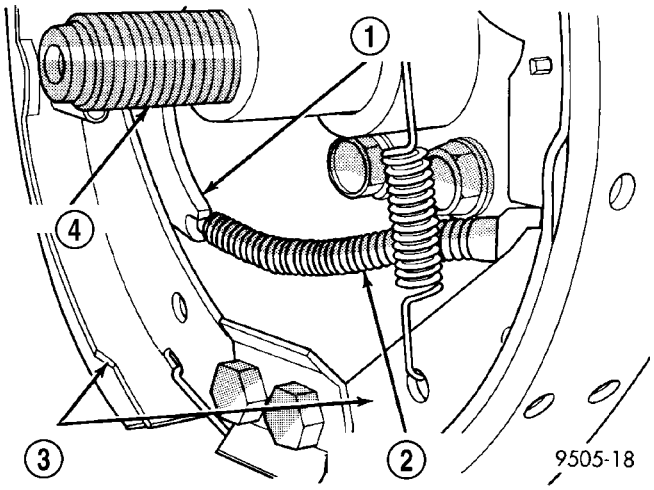

Fig. 122 Actuator Lever

1 - PARK BRAKE ACTUATING LEVER
2 - PARK BRAKE CABLE
3 - BRAKE SHOE ASSEMBLIES
4 - REAR SPINDLE

(24) To remove the rear parking brake cable from the disc brake adapter on vehicles equipped with rear disc brakes:

CABLE - PARKING BRAKE (Continued)

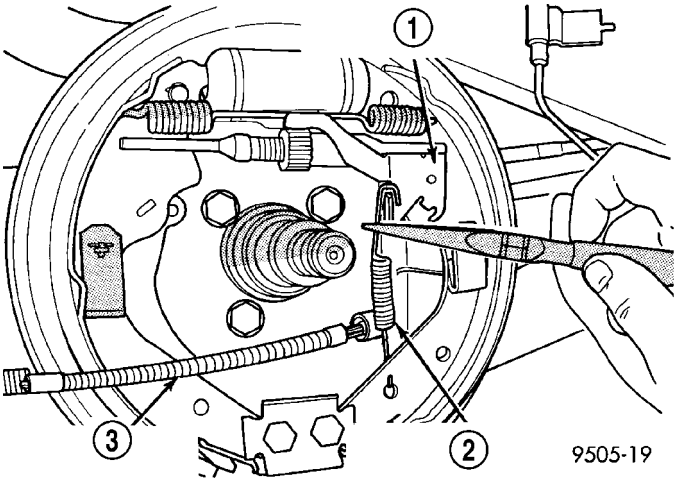

Fig. 123 Actuating Spring

1 - BRAKE SHOE ADJUSTMENT LEVER
2 - ADJUSTMENT LEVER ACTUATING SPRING
3 - PARK BRAKE CABLE

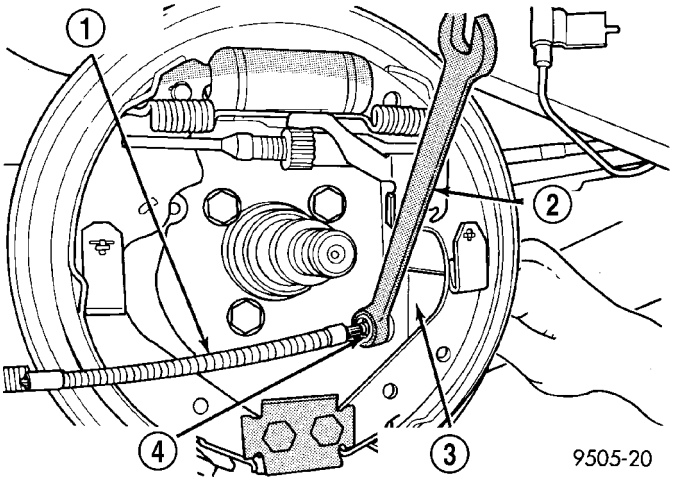

Fig. 124 Parking Brake Cable Removal

1 - PARK BRAKE CABLE
2 - 1/2'' WRENCH
3 - REAR BRAKE SUPPORT PLATE
4 - PARK BRAKE CABLE RETAINER

- Remove the parking brake actuating lever from the parking brake cable (Fig. 125).
- Remove the parking brake cable from the rear disc brake adapter. The parking brake cable can be removed from the disc brake adapter using a ½ inch offset box wrench to compress the locking fingers on the parking brake cable retainer (Fig. 126).

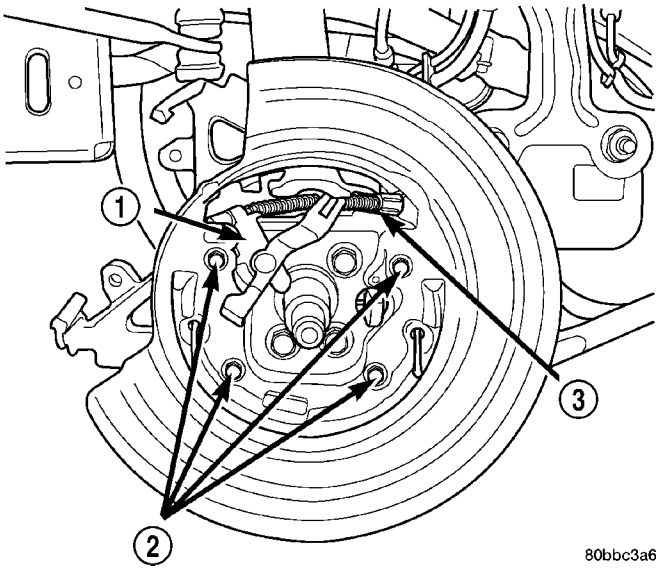

Fig. 125 Parking Brake Actuator Lever

1 - SHOE ACTUATOR LEVER
2 - SHIELD MOUNTING SCREWS
3 - REAR PARKING BRAKE CABLE

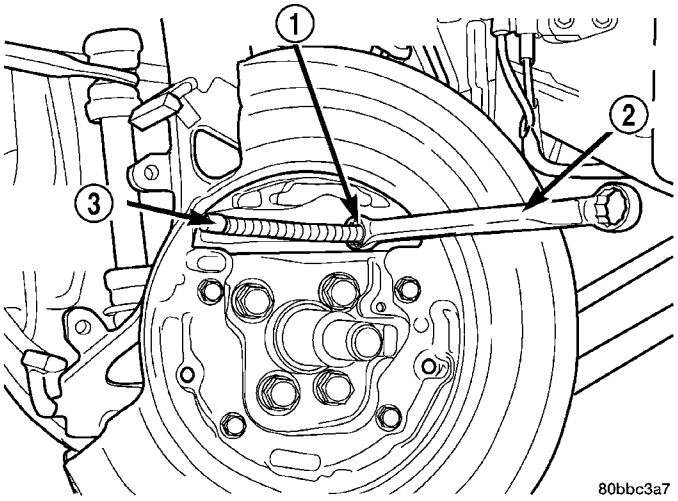

Fig. 126 Parking Brake Cable Removal

1 - CABLE RETAINER
2 - OFFSET BOX WRENCH
3 - PARKING BRAKE CABLE

CABLE - PARKING BRAKE (Continued)

(25) Remove the two fasteners securing the cable and routing brackets to the axle trailing arm (Fig. 127).

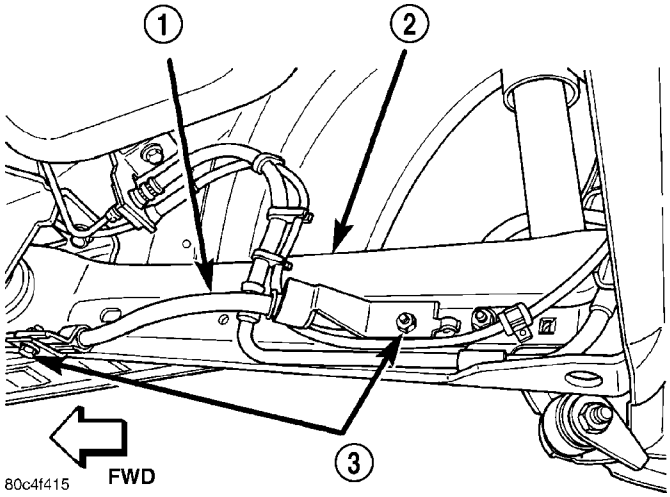

Fig. 127 Cable Routing Bracket Fasteners

1 - CABLE
2 - ARM
3 - FASTENERS

(26) Pull cable through hole in trailing arm.

(27) Remove the parking brake cable and sealing grommet from floor pan of the vehicle.

INSTALLATION

WARNING: THE AUTOMATIC ADJUSTING FEATURE OF THIS PARKING BRAKE LEVER CONTAINS A CLOCK SPRING LOADED TO APPROXIMATELY 19 POUNDS. DO NOT RELEASE THE AUTOMATIC ADJUSTER LOCKOUT DEVICE UNLESS THE REAR PARKING BRAKE CABLES AND EQUALIZER ARE CONNECTED TO THE LEVER OUTPUT CABLE. KEEP HANDS OUT OF AUTOMATIC ADJUSTER SECTOR AND PAWL AREA. FAILURE TO OBSERVE CAUTION IN HANDLING THIS MECHANISM COULD LEAD TO SERIOUS INJURY.

NOTE: The procedure below applies to either of the two rear parking brake cables.

(1) From underneath, push the parking brake cable through the hole in the floor pan of the vehicle making sure the cable sealing grommet is installed in the floor pan as far as possible to ensure a good seal.

(2) Guide the other end of the cable through the hole in the axle trailing arm.

(3) Align the cable routing brackets with their mounts on the trailing arm. Install the two fasteners securing the cable and routing brackets to the trailing arm (Fig. 127). Install and tighten the mounting bolts to a torque of 11 N·m (100 in. lbs.).

(4) Install the parking brake cable into the brake support plate or the rear disc brake adapter. Be sure the locking fingers on the cable retainer are expanded once the cable is pushed all the way into the support plate or brake adapter hole to ensure the cable is securely held in place.

(5) On vehicles equipped with rear drum brakes:

- Install the parking brake cable on the parking brake cable actuating lever (Fig. 122).
- Install the actuating spring to the brake shoe and the brake adjustment lever (Fig. 123).

(6) On vehicles equipped with rear disc brakes:

- Install the parking brake shoes actuator lever on the parking brake cable (Fig. 125).
- Install the parking brake shoe assemblies on the disc brake adapter (Fig. 121).

(7) Install the hub and bearing on the rear spindle. Install a new hub and bearing retaining nut. Tighten the retaining nut to a torque of 217 N·m (160 ft. lbs.).

(8) Install the hub and bearing dust cap.

(9) On drum brake equipped vehicles, install the rear brake drum.

(10) On vehicles equipped with rear disc brakes, install the brake rotor, then the disc brake caliper (Fig. 120). Install the two caliper guide pin bolts, then tighten them to a torque of 22 N·m (192 in. lbs.).

(11) Install the rear tire and wheel assembly. Tighten all wheel nuts to a torque of 135 N·m (100 ft. lbs.).

(12) Lower the vehicle.

(13) Ensure that the seal grommet on the cable that was installed from underneath is fully seated into the floor pan.

(14) Route the parking brake cable under the carpeting, up to parking brake cable retaining bracket on floor pan. Install the parking brake cable through the retaining bracket. Push the cable in until the locking fingers on the cable retainer lock the cable into place.

(15) Install the rear parking brake cables into the equalizer on the parking brake lever output cable (Fig. 118).

(16) Ensure that the parking brake cables are correctly installed on the equalizer and aligned with the cable track on the parking brake lever.

CABLE - PARKING BRAKE (Continued)

(17) Raise parking brake handle to full upright (applied) position.

(18) Keeping your hands clear of the automatic adjuster sector and pawl area, firmly grasp the parking brake lever pin punch (drill bit or locking pin if a new mechanism has been installed) (Fig. 117), then quickly remove it from the parking brake lever mechanism. This will allow the park brake lever mechanism to automatically adjust the parking brake cables.

(19) Install center console and mounting screws.

(20) Install rear window switch panel.

(21) Cycle the parking brake lever once to position the parking brake cables, then return the parking brake lever its released position.

(22) Check the rear wheels of the vehicle. They should rotate freely without dragging with the lever in its released position.

(23) Apply the parking brake.

(24) Remove the blocks from the tires and wheels.

(25) Reconnect the battery negative terminal.

(26) Reinstall the air cleaner cover (two clips).

LEVER - PARKING BRAKE

REMOVAL

WARNING: THE AUTOMATIC ADJUSTING FEATURE OF THIS PARKING BRAKE LEVER CONTAINS A CLOCK SPRING LOADED TO APPROXIMATELY 19 POUNDS. DO NOT RELEASE THE AUTOMATIC ADJUSTER LOCKOUT DEVICE UNLESS THE REAR PARKING BRAKE CABLES AND EQUALIZER ARE CONNECTED TO THE LEVER OUTPUT CABLE. KEEP HANDS OUT OF AUTOMATIC ADJUSTER SECTOR AND PAWL AREA. FAILURE TO OBSERVE CAUTION IN HANDLING THIS MECHANISM COULD LEAD TO SERIOUS INJURY.

WARNING: WHEN REPAIRS TO THE PARKING BRAKE LEVER OR CABLES ARE REQUIRED, THE AUTOMATIC ADJUSTER MUST BE LOADED AND LOCKED OUT TO AVOID POSSIBLE INJURY. THE LEVER ADJUSTMENT MECHANISM CAN BE LOADED AND LOCKED OUT AS OUTLINED IN THIS PROCEDURE.

WARNING: THE AIRBAG SYSTEM IS A COMPLEX ELECTROMECHANICAL UNIT. BEFORE ATTEMPTING TO SERVICE ANY COMPONENT NEAR THE OCCUPANT RESTRAINT CONTROLLER (ORC), FIRST DISCONNECT AND ISOLATE THE BATTERY NEGATIVE CABLE. ALLOW THE SYSTEM CAPACITOR TO DISCHARGE FOR TWO (2) MINUTES. FAILURE TO DO THIS COULD RESULT IN ACCIDENTAL AIRBAG DEPLOYMENT AND POSSIBLE PERSONAL INJURY.

(1) Unclip the air cleaner cover (two clips) and move the cover aside.

(2) Disconnect and isolate the battery negative cable from its post on the battery.

(3) Block the tire and wheels so the vehicle does not move once the vehicle parking brake lever is released.

(4) Remove the transmission shift knob as necessary.

(5) Place parking brake lever in released (full OFF) position.

(6) Remove screws attaching center console.

(7) Remove rear switch panel from center console.

(8) Working through switch opening, grasp a parking brake cable or equalizer and pull back approximately 25.4 mm (1 in.)

(9) While holding the cable or equalizer, pull the parking brake handle to it's full upright position.

(10) Remove center console.

(11) Grasp the parking brake lever outout cable by hand and pull upward. Continue pulling cable until an appropriate pin punch (drill bit or locking pin) can be inserted sufficiently through hole in left side of the lever mounting bracket (Fig. 128). This will lock the barking brake automatic adjustment mechanism in place and take tension off the parking brake cables. Slowly release the output cable. There should now be slack in the cables.

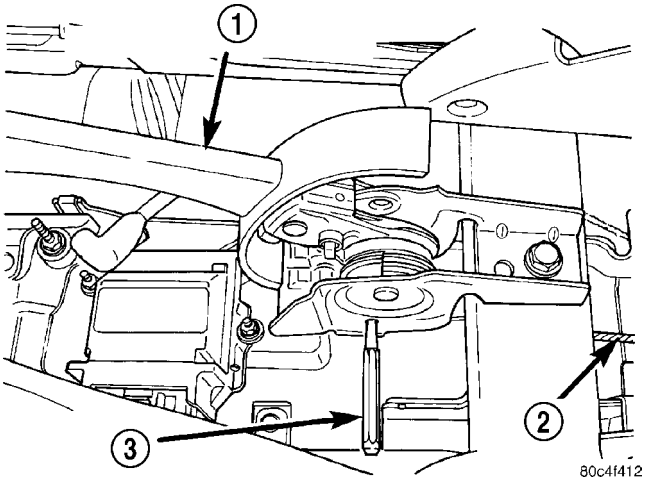

Fig. 128 Pin Punch Installed

1 - PARKING BRAKE LEVER
2 - OUTPUT CABLE
3 - PIN PUNCH

(12) Remove both rear parking brake cables from the parking brake cable equalizer (Fig. 129).

(13) Remove the wiring harness electrical connector from the parking brake warning switch on the right side of the parking brake lever.

LEVER - PARKING BRAKE (Continued)

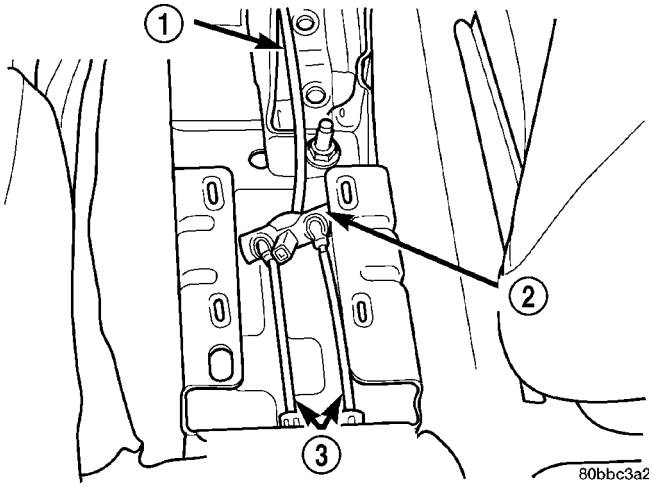

Fig. 129 Parking Brake Cables At Equalizer

1 - LEVER OUTPUT CABLE
2 - EQUALIZER
3 - REAR PARKING BRAKE CABLES

(14) Remove the screw and the nut attaching the parking brake lever to the vehicle (Fig. 130).

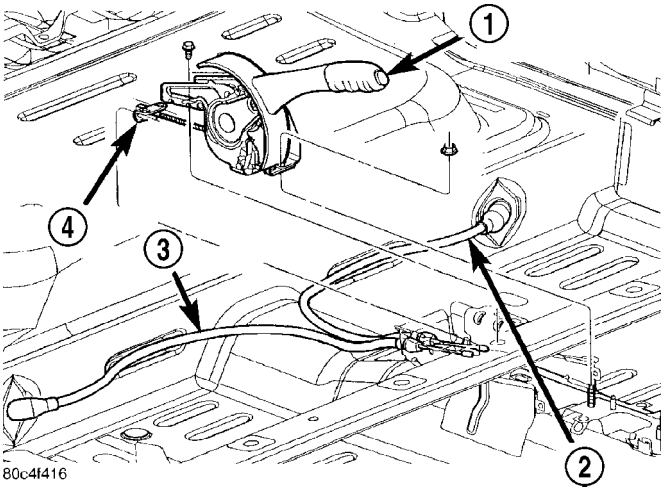

Fig. 130 Parking Brake Lever

1 - PARKING BRAKE LEVER
2 - LEFT CABLE
3 - RIGHT CABLE
4 - EQUALIZER

(15) Remove the parking brake lever from the vehicle.

INSTALLATION

WARNING: THE AUTOMATIC ADJUSTING FEATURE OF THIS PARKING BRAKE LEVER CONTAINS A CLOCK SPRING LOADED TO APPROXIMATELY 19 POUNDS. DO NOT RELEASE THE AUTOMATIC ADJUSTER LOCKOUT DEVICE UNLESS THE REAR PARKING BRAKE CABLES AND EQUALIZER ARE CONNECTED TO THE LEVER OUTPUT CABLE. KEEP HANDS OUT OF AUTOMATIC ADJUSTER SECTOR AND PAWL AREA. FAILURE TO OBSERVE CAUTION IN HANDLING THIS MECHANISM COULD LEAD TO SERIOUS INJURY.

(1) Place the parking brake lever on the mounting studs on the vehicle floor. Install and tighten the screw and the nut to a torque of 28 N·m (250 in. lbs.) (Fig. 130).

(2) Connect the wiring harness electrical connector on the parking brake warning switch.

(3) Install both rear park brake cables into the equalizer on the parking brake lever output cable (Fig. 129).

(4) Ensure that the parking brake cables are correctly installed on the equalizer and aligned with the cable track on the parking brake lever.

(5) Raise parking brake handle to full upright (applied) position.

(6) Keeping your hands clear of the automatic adjuster sector and pawl area, firmly grasp the parking brake lever pin punch (drill bit or locking pin if a new mechanism has been installed) (Fig. 128), then quickly remove it from the parking brake lever mechanism. This will allow the park brake lever mechanism to automatically adjust the parking brake cables.

(7) Install center console and mounting screws.

(8) Install rear window switch panel.

(9) Cycle the parking brake lever once to position the parking brake cables, then return the parking brake lever its released (full OFF) position.

(10) Check the rear wheels of the vehicle. They should rotate freely without dragging with the lever in its released (full OFF) position.

(11) Apply the parking brake.

(12) Remove the blocks from the tires and wheels.

(13) Reconnect the battery negative terminal.

(14) Reinstall the air cleaner cover (two clips).

SHOES - PARKING BRAKE

REMOVAL

NOTE: Before proceeding, (Refer to 5 - BRAKES - WARNING)(Refer to 5 - BRAKES - CAUTION).

(1) Raise the vehicle. (Refer to LUBRICATION & MAINTENANCE/HOISTING - STANDARD PROCEDURE)

(2) Remove the rear tire and wheel assembly.

(3) Remove the rear disc brake caliper assembly from the brake rotor and store it out of the way. (Refer to 5 - BRAKES/HYDRAULIC/MECHANICAL/DISC BRAKE CALIPER - REMOVAL)

SHOES - PARKING BRAKE (Continued)

(4) Remove rear brake rotor. (Refer to 5 - BRAKES/HYDRAULIC/MECHANICAL/ROTOR - REMOVAL)

(5) Remove the dust cap from the rear hub and bearing.

(6) Remove the rear hub and bearing assembly retaining nut and washer.

(7) Remove the rear hub and bearing assembly from the rear spindle.

(8) Remove the rear brake shoe assembly hold-down clip (Fig. 131).

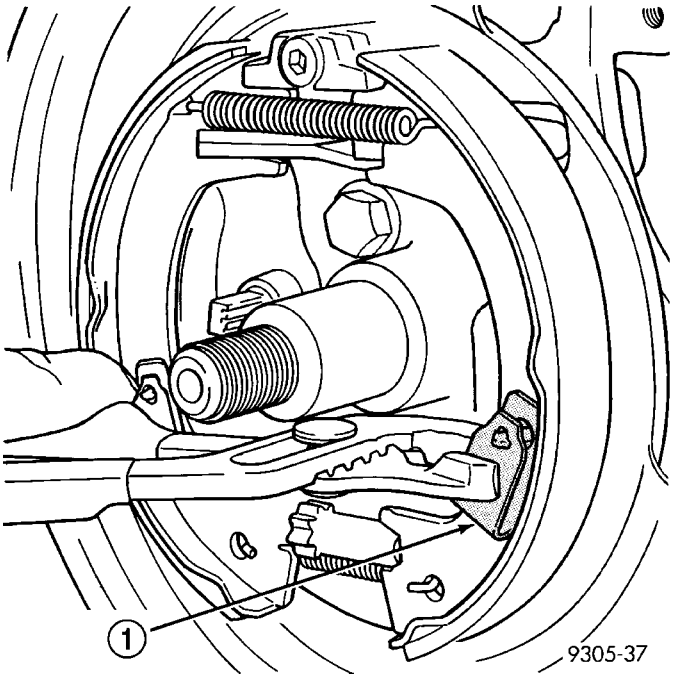

Fig. 131 Rear Brake Shoe Hold-Down Clip

1 - HOLD DOWN CLIP

(9) Turn the brake shoe adjuster wheel until the adjuster is at shortest length.

(10) Remove the adjuster assembly from the parking brake shoe assemblies (Fig. 132).

(11) Remove the lower shoe-to-shoe spring (Fig. 133).

(12) Pull the rear brake shoe away from anchor. Remove the rear brake shoe and upper return spring (Fig. 134).

(13) Remove the front brake shoe hold-down clip (Fig. 135). Remove the front brake shoe assembly.

INSTALLATION

NOTE: Perform Step 1 through Step 12 on each side of the vehicle to complete shoe set installation, then proceed to Step 13.

(1) Install the front brake shoe and secure it in place with a hold-down clip (Fig. 135).

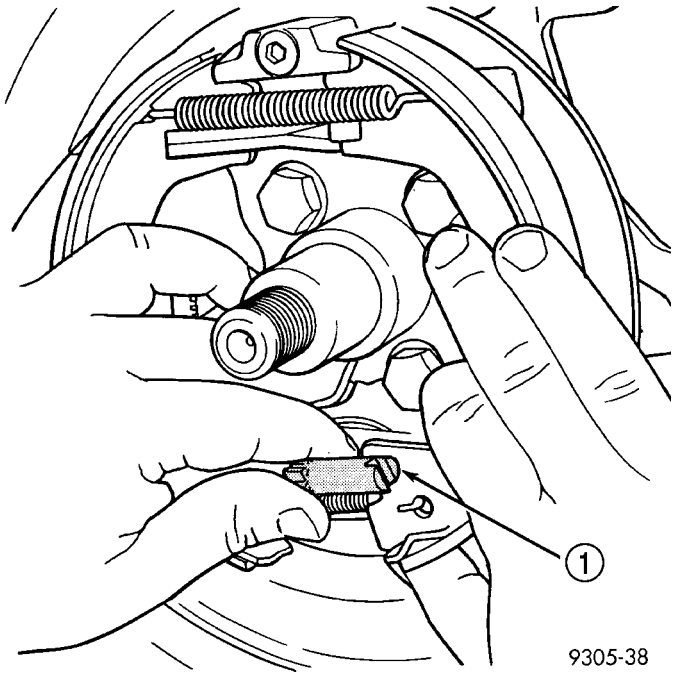

Fig. 132 Parking Brake Shoe Adjuster Assembly

1 - ADJUSTER

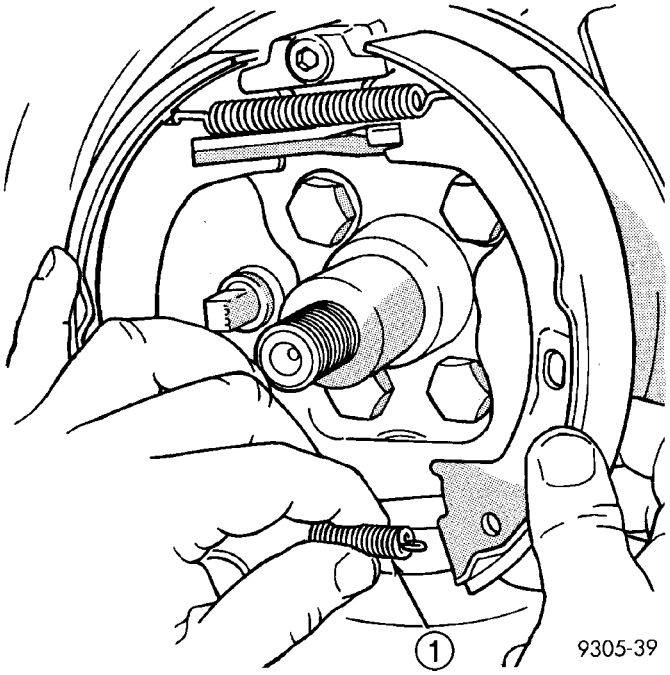

Fig. 133 Brake Shoe Lower Return Spring

1 - LOWER SPRING

(2) Install the rear brake shoe and the upper shoe return spring (Fig. 134). Pull the rear brake shoe over the anchor block until it is properly located on the adapter.

(3) Install the lower shoe-to-shoe return spring (Fig. 133).

SHOES - PARKING BRAKE (Continued)

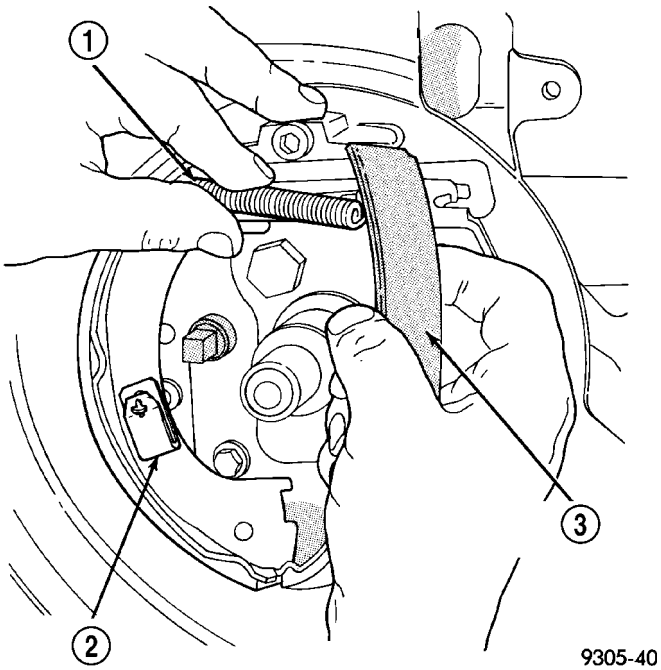

Fig. 134 Brake Shoe and Upper Spring

1 - UPPER SPRING
2 - HOLD DOWN CLIP
3 - REAR PARKING BRAKE SHOE

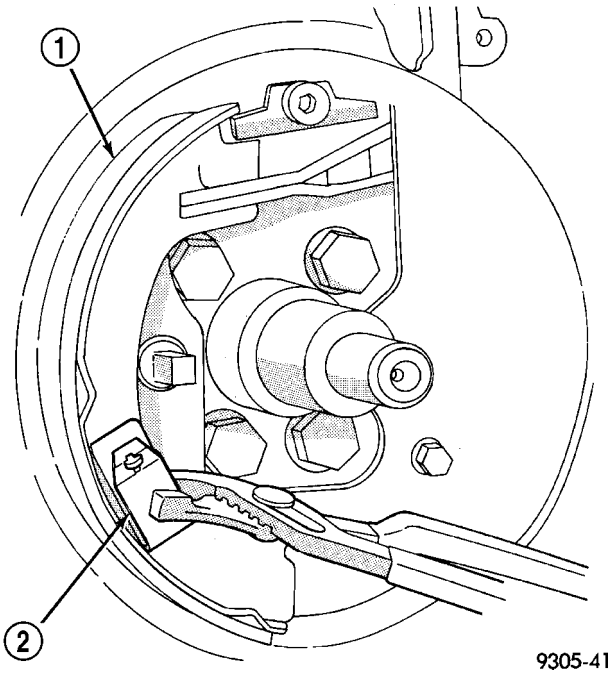

Fig. 135 Front Hold Down Clip And Brake Shoe

1 - FRONT BRAKE SHOE ASSEMBLY
2 - HOLD DOWN CLIP

(4) Install the brake shoe adjuster assembly with the star wheel towards the rear (Fig. 132).

(5) Install the rear brake shoe hold down clip (Fig. 131).

(6) Adjust the parking brake shoes to a diameter of 171 mm (6.75 inch) (Fig. 136).

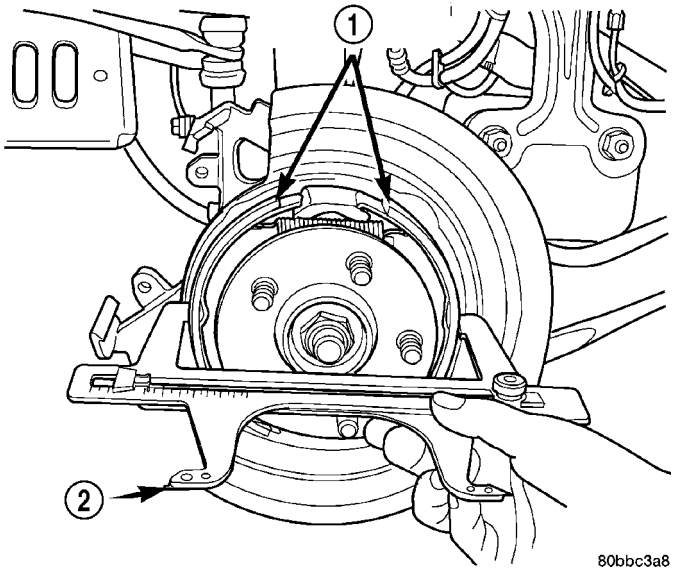

Fig. 136 Measuring Brake Shoes

1 - REAR PARKING BRAKE SHOES
2 - BRAKE SHOE GAUGE

(7) Install the rear hub and bearing assembly on spindle.

(8) Install a new hub and bearing assembly retaining nut. Tighten the retaining nut to a torque of 217 N·m (160 ft. lbs.).

(9) Install the hub and bearing dust cap.

(10) Install the rear brake rotor. (Refer to 5 - BRAKES/HYDRAULIC/MECHANICAL/ROTOR - INSTALLATION)

(11) Install rear disc brake caliper. (Refer to 5 - BRAKES/HYDRAULIC/MECHANICAL/DISC BRAKE CALIPER - INSTALLATION)

(12) Install the tire and wheel assembly. Tighten the wheel mounting nuts to a torque of 135 N·m (100 ft. lbs.).

(13) Adjust the parking brake shoes as necessary. (Refer to 5 - BRAKES/PARKING BRAKE/SHOES - ADJUSTMENTS)

(14) Lower the vehicle.

ADJUSTMENTS

ADJUSTMENT

NOTE: The parking brake shoes used in the drum-in-hat park brake system do not automatically adjust to compensate for brake shoe lining wear. Therefore, it is necessary to manually adjust the parking brake shoes.

SHOES - PARKING BRAKE (Continued)

NOTE: Before proceeding, (Refer to 5 - BRAKES - WARNING)(Refer to 5 - BRAKES - CAUTION).

(1) Verify the parking brake lever is in the released position.

(2) Raise the vehicle. (Refer to LUBRICATION & MAINTENANCE/HOISTING - STANDARD PROCEDURE)

(3) Remove the rubber plug from the adjusting hole in the disc brake caliper adapter.

(4) Adjust the parking brakes. Use the first bullet point for the adjustment of the left side parking brake shoes. Use the second bullet point for the adjustment of the right side parking brake shoes.

- Insert a medium size screwdriver through adjustment hole in the left backing plate. Position the screwdriver against the star wheel on the parking brake shoe adjuster. Using the screwdriver, rotate the star wheel downward until a slight drag is noticed when turning the rear tire and wheel assembly. Then, using the screwdriver, slowly rotate the star wheel upward, backing off the adjuster, just enough to allow the rear tire and wheel assembly to rotate without the parking brake shoes dragging. Do not back off the adjuster star wheel more than two clicks past the point of no drag. The parking brake shoe-to-drum clearance is now properly set.
- Insert a medium size screwdriver through adjustment hole in the right backing plate. Position the screwdriver against the star wheel on the parking brake shoe adjuster. Using the screwdriver, rotate the star wheel upward until a slight drag is noticed when turning the rear tire and wheel assembly. Then, using the screwdriver, slowly rotate the star wheel downward, backing off the adjuster, just enough to allow the rear tire and wheel assembly to rotate without the parking brake shoes dragging. Do not back off the adjuster star wheel more that two clicks past the point of no drag. The parking brake shoe-to-drum clearance is now properly set.

(5) Install the rubber plug in the adjusting holes of the disc brake caliper adapter.

(6) Lower the vehicle until the rear tires are just clearing the floor.

(7) Reach inside the vehicle and fully apply and release the park brakes two times after adjusting the parking brake shoes.

(8) With the parking brake lever in the fully applied position, attempt to hand rotate each rear tire and wheel assembly to ensure that the parking brake shoes are working.

(9) With the parking brake lever in the released position, hand rotate each rear tire and wheel assembly to ensure that the parking brake shoes are not dragging.

BRAKES - ABS

TABLE OF CONTENTS

page

BRAKES - ABS
DESCRIPTION
DESCRIPTION - ANTILOCK BRAKE SYSTEM . . . 73
DESCRIPTION - ELECTRONIC VARIABLE BRAKE PROPORTIONING . . . 74
DESCRIPTION - TRACTION CONTROL SYSTEM . . . 74
OPERATION
OPERATION - ANTILOCK BRAKE SYSTEM . . . 74
OPERATION - ELECTRONIC VARIABLE BRAKE PROPORTIONING . . . 75
OPERATION - TRACTION CONTROL SYSTEM . . . 75
CAUTION
CAUTIONS . . . 76
DIAGNOSIS AND TESTING - INSPECTION AND ROAD TEST . . . 76
STANDARD PROCEDURE - ANTILOCK BRAKE SYSTEM BLEEDING . . . 77
SPECIFICATIONS
SPECIFICATIONS - ABS FASTENER TORQUE . . . 78
TONE WHEEL RUNOUT . . . 78
WHEEL SPEED SENSOR AIR GAP . . . 78
FRONT WHEEL SPEED SENSOR
DESCRIPTION . . . 78
OPERATION . . . 78
REMOVAL . . . 79
INSTALLATION . . . 80
REAR WHEEL SPEED SENSOR
DESCRIPTION . . . 80
OPERATION . . . 81
REMOVAL . . . 81
INSTALLATION . . . 82
TONE WHEEL
DESCRIPTION . . . 82
OPERATION . . . 82
INSPECTION . . . 82
TRACTION CONTROL SWITCH
REMOVAL . . . 83
INSTALLATION . . . 83
HCU - HYDRAULIC CONTROL UNIT
DESCRIPTION - HYDRAULIC CONTROL UNIT (HCU) . . . 83
OPERATION - HYDRAULIC CIRCUITS AND VALVES . . . 84
ICU - INTEGRATED CONTROL UNIT
DESCRIPTION . . . 90
OPERATION . . . 90
REMOVAL . . . 90
DISASSEMBLY - ICU . . . 92
ASSEMBLY - ICU . . . 92
INSTALLATION . . . 92

BRAKES - ABS

DESCRIPTION

DESCRIPTION - ANTILOCK BRAKE SYSTEM

This section covers the physical and operational descriptions, and the on-car service procedures for the Mark 20e Antilock Brake System (ABS) and Mark 20e Antilock Brake System with traction control.

All vehicles equipped with ABS use electronic variable brake proportioning (EVBP) to balance front-to-rear braking when the brakes are applied in the partial braking range. For more information on electronic brake distribution, (Refer to 5 - BRAKES - ABS - DESCRIPTION).

The traction control system reduces wheel slip and maintains traction at the driving speeds below 64 km/h (40 mph) when road conditions call for traction assistance. For more information on traction control, (Refer to 5 - BRAKES - ABS - DESCRIPTION).

This system shares most base brake hardware used on vehicles without ABS. A vehicle equipped with ABS, however, uses a different master cylinder and brake tubes. Also included in the ABS system is an integrated control unit (ICU) and four wheel speed sensors. These components are described in detail in this section. All vehicles with ABS come standard with four-wheel-disc brakes.

The antilock brake system prevents wheel lockup under braking conditions on virtually any type of road surface. Antilock braking is desirable because a vehicle that is stopped without locking the wheels retains directional stability and some steering capability. This allows the driver to retain greater control of the vehicle during braking.

BRAKES - ABS (Continued)

DESCRIPTION - ELECTRONIC VARIABLE BRAKE PROPORTIONING

Vehicles equipped with ABS use electronic variable brake proportioning (EVBP) to balance front-to-rear braking. The EVBP is used in place of a rear proportioning valve. The EVBP system uses the ABS system to control the slip of the rear wheels in partial braking range. The braking force of the rear wheels is controlled electronically by using the inlet and outlet valves located in the integrated control unit (ICU).

EVBP activation is invisible to the customer since there is no pump motor noise or brake pedal feedback.

DESCRIPTION - TRACTION CONTROL SYSTEM

Traction control reduces wheel slip and maintains traction at the driving wheels at speeds below 64 km/h (40 mph) when road surfaces are slippery. The traction control system reduces wheel slip by braking the wheel that is losing traction.

The traction control system may be turned off or on by depressing the traction control switch button located on the instrument panel (Fig. 1).

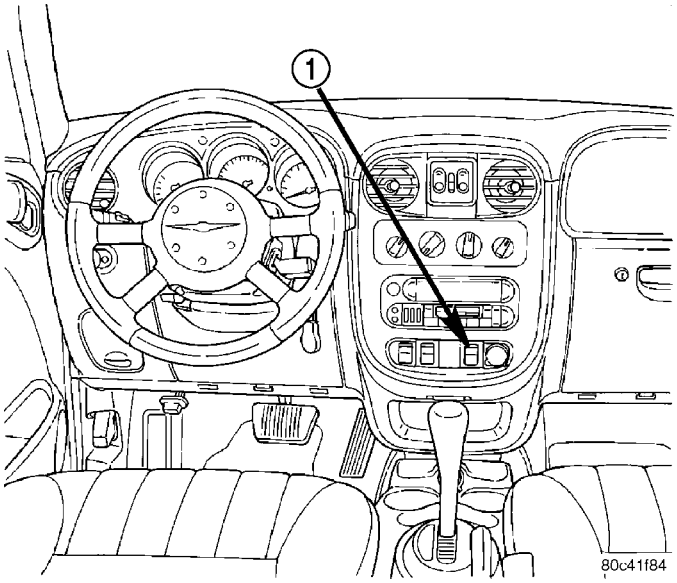

Fig. 1 Traction Control Switch Location

1 - TRACTION CONTROL SWITCH

OPERATION

OPERATION - ANTILOCK BRAKE SYSTEM

There are a few performance characteristics of the Mark 20e Antilock Brake System that may at first seem abnormal, but in fact are normal. These characteristics are described below.

NORMAL BRAKING

Under normal braking conditions, the ABS functions the same as a standard base brake system with a diagonally split master cylinder and conventional vacuum assist.

ABS BRAKING

ABS operation is available at all vehicle speeds above 5–8 km/h (3–5 mph). If a wheel locking tendency is detected during a brake application, the brake system enters the ABS mode. During ABS braking, hydraulic pressure in the four wheel circuits is modulated to prevent any wheel from locking. Each wheel circuit is designed with a set of electric solenoids to allow modulation, although for vehicle stability, both rear wheel solenoids receive the same electrical signal. Wheel lockup may be perceived at the very end of an ABS stop and is considered normal.

During an ABS stop, the brakes hydraulic system is still diagonally split. However, the brake system pressure is further split into four control channels. During antilock operation of the vehicle's brake system, the wheels are controlled independently and are on separate control channels.

The system can build, hold and release pressure at each wheel, depending on signals generated by the wheel speed sensors (WSS) at each wheel and received at the controller antilock brake (CAB).

NOISE AND BRAKE PEDAL FEEL

During ABS braking, some brake pedal movement may be felt. In addition, ABS braking will create ticking, popping, or groaning noises heard by the driver. This is normal and is due to pressurized fluid being transferred between the master cylinder and the brakes. If ABS operation occurs during hard braking, some pulsation may be felt in the vehicle body due to fore-and-aft movement of the suspension as brake pressures are modulated.

At the end of an ABS stop, ABS is turned off when the vehicle is slowed to a speed of 5–6 km/h (3–4 mph). There may be a slight brake pedal drop anytime that the ABS is deactivated, such as at the end of the stop when the vehicle speed is less than 5 km/h (3 mph) or during an ABS stop where ABS is no longer required. These conditions exist when a vehicle is being stopped on a road surface with patches of ice, loose gravel, or sand on it. Also, stopping a vehicle on a bumpy road surface activates ABS because of the wheel hop caused by the bumps.

BRAKES - ABS (Continued)

TIRE NOISE AND MARKS

Although the ABS system prevents complete wheel lockup, some wheel slip is desired in order to achieve optimum braking performance. Wheel slip is defined as follows: 0 percent slip means the wheel is rolling freely and 100 percent slip means the wheel is fully locked. During brake pressure modulation, wheel slip is allowed to reach up to 25–30 percent. This means that the wheel rolling velocity is 25–30 percent less than that of a free rolling wheel at a given vehicle speed. This slip may result in some tire chirping, depending on the road surface. This sound should not be interpreted as total wheel lockup.

Complete wheel lockup normally leaves black tire marks on dry pavement. The ABS will not leave dark black tire marks since the wheel never reaches a fully locked condition. However, tire marks may be noticeable as light patched marks.

START-UP CYCLE

When the ignition is turned on, a popping sound and a slight brake pedal movement may be noticed. The ABS warning indicator lamp will also be on for up to 5 seconds after the ignition is turned on. These conditions occur as part of an ABS self-diagnosis test performed by the antilock brake system. The popping noise is the result of brief activation of the solenoids inside the integrated control unit (ICU).

DRIVE-OFF CYCLE

When the vehicle is first driven off, a humming may be heard or felt by the driver at approximately 25–40 km/h (15–25 mph). This is caused by brief activation of the ABS pump motor on the ICU and is a normal function of ABS as the system is performing a diagnosis check.

PREMATURE ABS CYCLING

Symptoms of premature ABS cycling include: clicking sounds from the solenoid valves; pump/motor running; and pulsations in the brake pedal. Premature ABS cycling can occur at any braking rate of the vehicle and on any type of road surface.

Premature ABS cycling is a condition that needs to be correctly assessed when diagnosing problems with the antilock brake system. It may be necessary to use a DRBIII® scan tool to detect and verify premature ABS cycling.

Check the following common causes when diagnosing premature ABS cycling: damaged tone wheels; incorrect tone wheels; damaged steering knuckle wheel speed sensor mounting bosses; loose wheel speed sensor mounting bolts; excessive tone wheel runout; excessively large tone wheel-to-wheel speed sensor air gap, or a damaged speed sensor head face. Give special attention to these components when diagnosing a vehicle exhibiting premature ABS cycling.

After diagnosing the defective component, repair or replace it as required. When the component repair or replacement is completed, test drive the vehicle to verify that premature ABS cycling has been corrected.

OPERATION - ELECTRONIC VARIABLE BRAKE PROPORTIONING

Upon entry into EVBP the inlet valve for the rear brake circuit is switched on so that the fluid supply from the master cylinder is shut off. In order to decrease the rear brake pressure, the outlet valve for the rear brake circuit is pulsed. This allows fluid to enter the low pressure accumulator (LPA) in the hydraulic control unit (HCU) resulting in a drop in fluid pressure to the rear brakes. In order to increase the rear brake pressure, the outlet valve is switched off and the inlet valve is pulsed. This increases the pressure to the rear brakes. This back-and-forth process will continue until the required slip difference is obtained. At the end of EVBP braking (brakes released) the fluid in the LPA drains back to the master cylinder by switching on the outlet valve and draining through the inlet valve check valve. At the same time the inlet valve is switched on in case of another brake application.

The EVBP will remain functional during many ABS fault modes. If both the red BRAKE and amber ABS warning indicators are illuminated, the EVBP may not be functioning.

OPERATION - TRACTION CONTROL SYSTEM

The CAB monitors wheel speed. During acceleration, if the CAB detects front (drive) wheel slip and the brakes are not applied, the CAB enters traction control mode. Traction control operation proceeds in the following order:

(1) Close the normally open traction control (TC) valves.

(2) Start the pump/motor and supply volume and pressure to the front (drive) hydraulic circuit. (The pump/motor runs continuously during traction control operation.)

(3) Open and close the build and decay solenoid valves to maintain minimum wheel slip and maximum traction.

The cycling of the build and decay valves during traction control is similar to that during antilock braking, except the valves work to control wheel spin by applying the brakes, whereas the ABS function is to control wheel skid by releasing the brakes.

Two pressure relief shuttle valves allow pressure and volume to return to the master cylinder reservoir when not consumed by the build and decay valves.

BRAKES - ABS (Continued)

These valves are necessary because the pump/motor supplies more volume than the system requires.

If the brakes are applied at anytime during a traction control cycle, the brake lamp switch triggers the control module to switch off traction control.

The traction control function indicator illuminates during a traction control cycle, displaying TRAC on the instrument panel.

The traction control system is enabled at each ignition cycle. It may be turned off by depressing the traction control switch button. The traction control function indicator (TRAC OFF) illuminates immediately upon depressing the button. Pressing this button again or turning off and restarting the vehicle will enable the traction control system.

If the CAB calculates that the brake temperatures are high, the traction control system becomes inoperative until a time-out period has elapsed. During this "thermo-protection mode," the traction control function indicator illuminates TRAC OFF; note that no trouble code is registered.

CAUTION

CAUTIONS

The ABS uses an electronic control module, the CAB. This module is designed to withstand normal current draws associated with vehicle operation. Care must be taken to avoid overloading the CAB circuits.

CAUTION: In testing for open or short circuits, do not ground or apply voltage to any of the circuits unless instructed to do so for a diagnostic procedure.

CAUTION: These circuits should only be tested using a high impedance multi-meter or the DRBIII® scan tool as described in this section. Power should never be removed or applied to any control module with the ignition in the ON position. Before removing or connecting battery cables, fuses, or connectors, always turn the ignition to the OFF position.

CAUTION: The CAB 24-way connector should never be connected or disconnected with the ignition switch in the ON position.

CAUTION: This vehicle utilizes active wheel speed sensors. Do not apply voltage to wheel speed sensors at any time.

CAUTION: Use only factory wiring harnesses. Do not cut or splice wiring to the brake circuits. The addition of aftermarket electrical equipment (car phone, radar detector, citizen band radio, trailer lighting, trailer brakes, etc.) on a vehicle equipped with antilock brakes may affect the function of the antilock brake system.

CAUTION: When performing any service procedure on a vehicle equipped with ABS, do not apply a 12-volt power source to the ground circuit of the pump motor in the HCU. Doing this will damage the pump motor and will require replacement of the entire HCU.

CAUTION: An attempt to remove or disconnect certain system components may result in improper system operation. Only those components with approved removal and installation procedures in this manual should be serviced.

CAUTION: If welding work is to be performed on the vehicle, using an electric arc welder, the CAB connector should be disconnected during the welding operation.

CAUTION: Many components of the ABS System are not serviceable and must be replaced as an assembly. Do not disassemble any component which is not designed to be serviced.

CAUTION: Only the recommended jacking or hoisting positions for this vehicle are to be used whenever it is necessary to lift a vehicle. Failure to raise a vehicle from the recommended locations could result in lifting a vehicle by the hydraulic control unit mounting bracket. Lifting a vehicle by the hydraulic control unit mounting bracket will result in damage to the mounting bracket and the hydraulic control unit.

CAUTION: Brake fluid will damage painted surfaces. If brake fluid is spilled on any painted surface, wash off with water immediately.

DIAGNOSIS AND TESTING - INSPECTION AND ROAD TEST

(1) Visually inspect the ABS for damaged or disconnected components and connectors.

(2) Verify the brake lamps are operational. If they are not, repair them prior to continuing.

BRAKES - ABS (Continued)

(3) Connect the DRBIII® scan tool to the Data Link Connector located under the instrument panel to the left of the steering column (Fig. 2). If the DRBIII® does not power-up, check the power and ground supplies to the connector.

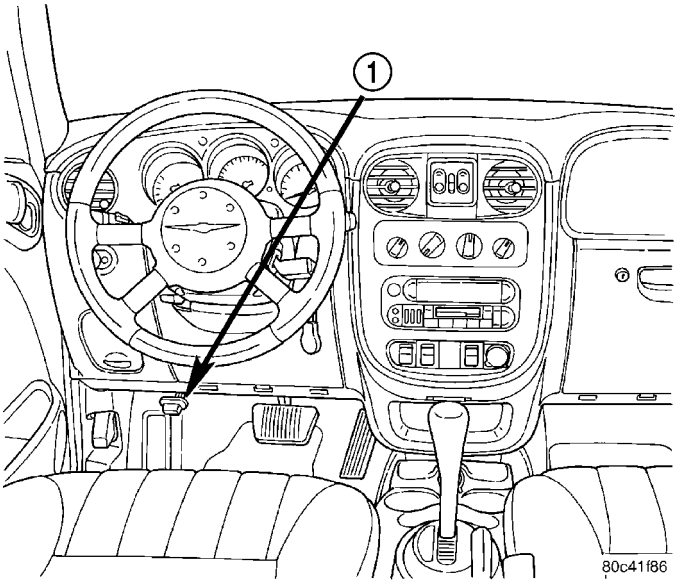

Fig. 2 Data Link Connector Location

1 - DATA LINK CONNECTOR (DLC)

(4) Turn the ignition key to the ON position. Select ANTILOCK BRAKES.

(5) Read and record any Diagnostic Trouble Codes (DTCs). If any DTCs are present, refer to the appropriate chassis diagnostic information.

NOTE: Diagnostic trouble codes (DTCs) are kept in the controller's memory until either erased by the technician using the DRBIII®, or erased automatically after 3500 miles or 255 ignition key cycles, whichever occurs first. DTCs are retained by the controller even if the ignition is turned off or the battery is disconnected. More than one DTC can be stored at a time. When accessed, the number of occurrences and the DTC that is stored are displayed.

If no problems are observed, it will be necessary to road test the vehicle.

Many ABS conditions judged to be a problem by the driver may be normal operating conditions. To become familiarized with the normal operating characteristics of this antilock brake system, (Refer to 5 - BRAKES - ABS OPERATION).

WARNING: CONDITIONS THAT RESULT IN TURNING ON THE RED BRAKE WARNING INDICATOR LAMP MAY INDICATE REDUCED BRAKING ABILITY.

Before road testing a brake complaint vehicle, note whether the red BRAKE warning indicator lamp, amber ABS warning indicator lamp, or both are turned on. If it is the red BRAKE warning indicator, there is a brake hydraulic problem that must be corrected before driving the vehicle (Refer to 5 - BRAKES - BASE - DIAGNOSIS AND TESTING). If the red BRAKE warning indicator is illuminated, there is also a possibility that there is an ABS problem and the amber ABS warning indicator is not able to illuminate, so the MIC turns on the red BRAKE warning indicator by default.

If the amber ABS warning indicator is on, road test the vehicle as described below. While only the amber ABS warning indicator is on, the ABS is not functional. The ability to stop the car using the base brake system should not be affected.

(6) Turn the key to the OFF position and then back to the ON position. Note whether the amber ABS warning indicator lamp continues to stay on.

(7) If the amber ABS warning indicator lamp stays on, shift into gear and drive the car to a speed of approximately 25 km/h (15 mph) to complete the ABS Start-Up and Drive-Off Cycles (see Antilock Brake System - Operation). If at this time the amber ABS warning indicator lamp stays on, refer to the Appropriate Diagnostic Information.

(8) If the amber ABS warning indicator lamp goes out at any time, drive the vehicle a short distance. Accelerate the vehicle to a speed of at least 64 km/h (40 mph). Bring the vehicle to a complete stop, braking hard enough to cause the ABS to cycle. Repeat this action several times. Using the DRBIII®, read and record any Diagnostic Trouble Codes (DTCs). If any DTCs are present, refer to the Appropriate Diagnostic Information.

STANDARD PROCEDURE - ANTILOCK BRAKE SYSTEM BLEEDING

The base brake's hydraulic system must be bled anytime air enters the hydraulic system. The ABS though, particularly the ICU (HCU), should only need to be bled when the HCU is replaced or removed from the vehicle. The ABS must always be bled anytime it is suspected that the HCU has ingested air. Under most circumstances that require the bleeding of the brakes hydraulic system, only the base brake hydraulic system needs to be bled.

When bleeding the ABS system, the following bleeding sequence must be followed to insure complete and adequate bleeding.

(1) Make sure all hydraulic fluid lines are installed and properly torqued.

BRAKES - ABS (Continued)

(2) Connect the DRBIII® scan tool to the Data Link Connector. The connector is located under the lower steering column cover to the left of the steering column.

(3) Using the DRBIII®, check to make sure the CAB does not have any fault codes stored. If it does, clear them using the DRBIII®.

WARNING: WHEN BLEEDING THE BRAKE SYSTEM WEAR SAFETY GLASSES. A CLEAR BLEED TUBE MUST BE ATTACHED TO THE BLEEDER SCREWS AND SUBMERGED IN A CLEAR CONTAINER FILLED PART WAY WITH CLEAN BRAKE FLUID. DIRECT THE FLOW OF BRAKE FLUID AWAY FROM YOURSELF AND THE PAINTED SURFACES OF THE VEHICLE. BRAKE FLUID AT HIGH PRESSURE MAY COME OUT OF THE BLEEDER SCREWS WHEN OPENED.

(4) Bleed the base brake system using the standard pressure or manual bleeding procedure. (Refer to 5 - BRAKES - BASE - STANDARD PROCEDURE)

(5) Using the DRBIII®, select ANTILOCK BRAKES, followed by MISCELLANEOUS, then BLEED BRAKES. Follow the instructions displayed. When the scan tool displays TEST COMPLETED, disconnect the scan tool and proceed.

(6) Bleed the base brake system a second time. Check brake fluid level in the reservoir periodically to prevent emptying, causing air to enter the hydraulic system.

(7) Fill the master cylinder reservoir to the full level.

(8) Test drive the vehicle to be sure the brakes are operating correctly and that the brake pedal does not feel spongy.

SPECIFICATIONS

SPECIFICATIONS - ABS FASTENER TORQUE

(Refer to 5 - BRAKES - BASE - SPECIFICATIONS - BRAKE FASTENER TORQUE)

TONE WHEEL RUNOUT

FRONT TONE WHEEL:	
Maximum Runout	0.25 mm (0.009 in.)
REAR TONE WHEEL:	
Maximum Runout	0.25 mm (0.009 in.)

WHEEL SPEED SENSOR AIR GAP

DESCRIPTION	SPECIFICATION
FRONT SENSOR	0.30 – 1.50 mm 0.012 –0.059 in.
REAR SENSOR	0.50 – 1.25 mm 0.019 – 0.049 in.

FRONT WHEEL SPEED SENSOR

DESCRIPTION

The Mark 20e system uses two-wire wheel speed sensors, known as active wheel speed sensors. The sensors use an electronic principle known as magnetoresistive to help increase performance and durability. The sensors convert wheel speed into a small digital signal. A wheel speed sensor is used at each wheel. The gear (tooth) type tone wheel serves as the trigger mechanism for each sensor. At each wheel of the vehicle there is one wheel speed sensor and one tone wheel.

The front wheel speed sensors are attached to bosses in the steering knuckles (Fig. 3) (Fig. 4). There is a heat shield mounted between each sensor and the knuckle. The tone wheel is an integral part of the outboard constant velocity joint located in the front axle shaft.

WSS air gaps are not adjustable. The initial factory WSS air gap specification can be found in SPECIFICATIONS. Each WSS is serviced individually. The tone wheels are serviced as part of the drive shaft.

OPERATION

The CAB sends 12 volts to power an Integrated Circuit (IC) in the sensor. The IC supplies a constant 7 mA power supply to the CAB. The relationship of the tooth on the tone wheel to the permanent magnet in the sensor, signals the IC to enable a second 7 mA power supply. The output of the sensor, sent to the CAB, is a DC voltage signal with changing voltage and current levels. The ground for the IC and the current sense circuit is provided by the CAB.

When a valley of the tone wheel is aligned with the sensor, the voltage signal is approximately 0.8 volts and a constant 7 mA current is sent to the CAB. As the tone wheel rotates, the tooth shifts the magnetic field and the IC enables a second 7 mA current source. The CAB senses a voltage signal of approximately 1.6 volts and 14 mA. The CAB measures the amperage of the digital signal for each wheel. The resulting signal is interpreted by the ABS CAB as the wheel speed.

FRONT WHEEL SPEED SENSOR (Continued)

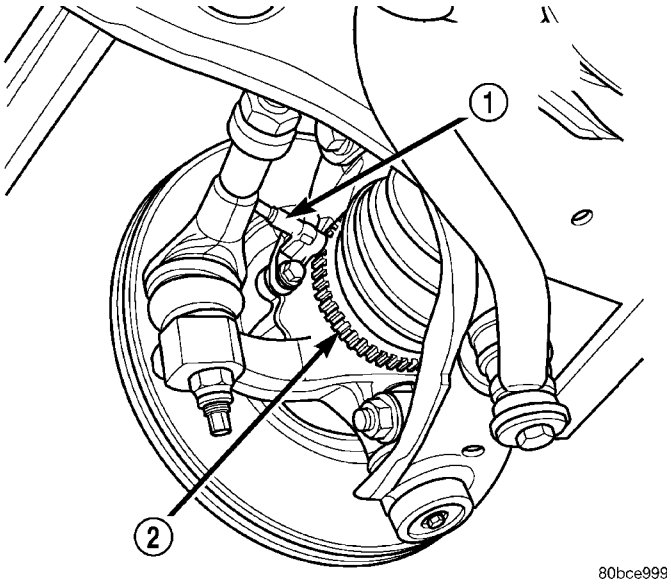

Fig. 3 Left Front Wheel Speed Sensor (Heat Shield Not Shown)

1 - LEFT FRONT WHEEL SPEED SENSOR
2 - TONE WHEEL

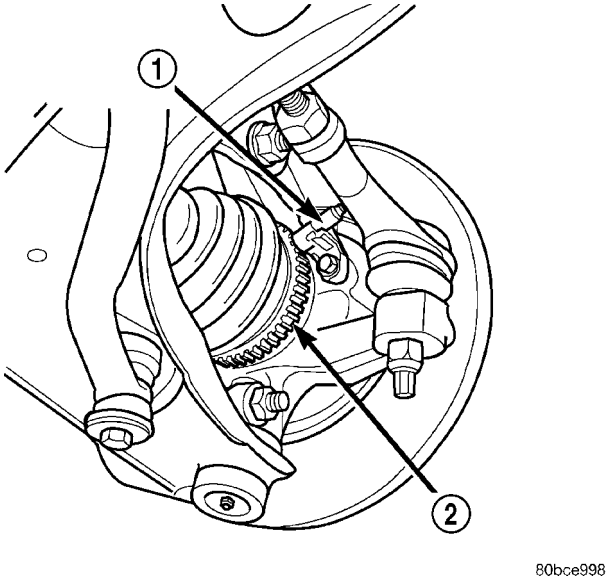

Fig. 4 Right Front Wheel Speed Sensor (Heat Shield Not Shown)

1 - RIGHT FRONT WHEEL SPEED SENSOR
2 - TONE WHEEL

REMOVAL

NOTE: Before proceeding, (Refer to 5 - BRAKES - WARNING)(Refer to 5 - BRAKES - CAUTION).

(1) Raise the vehicle. (Refer to LUBRICATION & MAINTENANCE/HOISTING - STANDARD PROCEDURE).

(2) Disconnect the wheel speed sensor cable connector from the wiring harness on the inside of the frame rail above the front suspension crossmember (Fig. 5). The connector has a locking tab which that must be pulled back before the connector release tang can be depressed, releasing the connection.

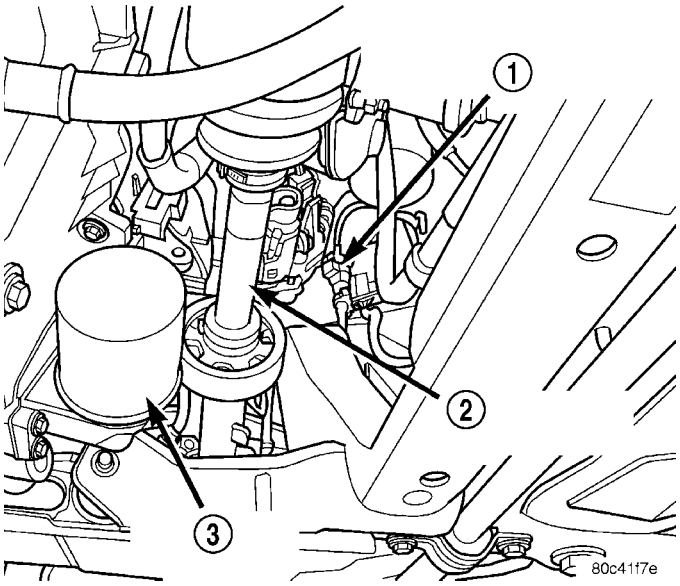

Fig. 5 Wiring Harness Connector

1 - RIGHT FRONT WHEEL SPEED SENSOR CONNECTOR
2 - RIGHT FRONT DRIVESHAFT
3 - ENGINE OIL FILTER

(3) If the sensor being removed is a left front, unclip the speed sensor cable from the brake tube on the inside of and under the frame rail (Fig. 6).

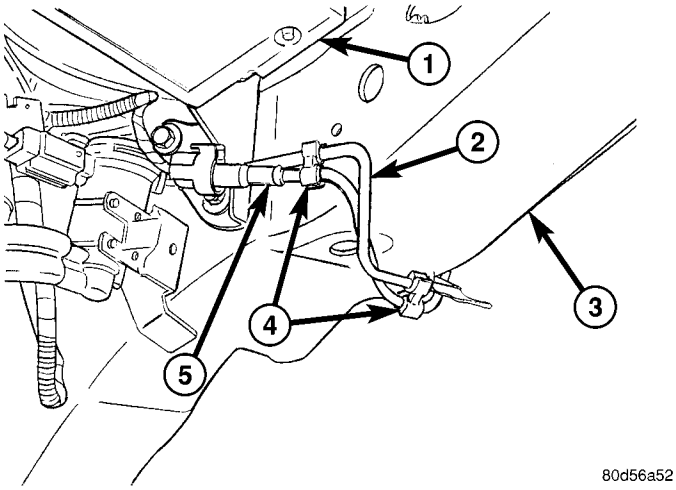

Fig. 6 Left Sensor Routing Along Brake Tube

1 - ABS ICU
2 - BRAKE TUBE
3 - FRAME RAIL
4 - ROUTING CLIPS
5 - WHEEL SPEED SENSOR CABLE

FRONT WHEEL SPEED SENSOR (Continued)

(4) Remove the speed sensor cable grommet from the retaining bracket attached to the brake hose on the outside of the frame rail.

(5) Remove the bolt mounting the wheel speed sensor head to the steering knuckle (Fig. 7).

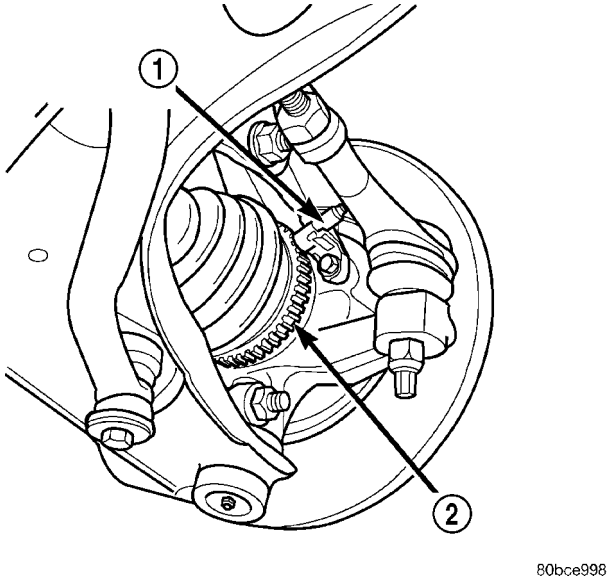

Fig. 7 Wheel Speed Sensor (Heat Shield Not Shown)

1 - RIGHT FRONT WHEEL SPEED SENSOR
2 - TONE WHEEL

CAUTION: When removing a wheel speed sensor from the knuckle, do not use pliers on the sensor head. This may damage the sensor head. If the sensor has seized, use a hammer and a punch to tap the edge of the sensor head ear, rocking the sensor side-to-side until free.

(6) Carefully, remove the sensor head and heat shield from the steering knuckle.

(7) Remove the screw securing the wheel speed sensor to the rear of the strut (Fig. 8). Remove the wheel speed sensor.

INSTALLATION

CAUTION: Failure to install speed sensor cables properly may result in contact with moving parts or an over extension of cables causing an open circuit. Be sure that cables are installed, routed, and clipped properly.

(1) Attach the wheel speed sensor to the strut using the its mounting screw (Fig. 8).

(2) Install the wheel speed sensor head in the steering knuckle (Fig. 7). Install the mounting bolt. Tighten the mounting bolt to a torque of 12 N·m (105 in. lbs.).

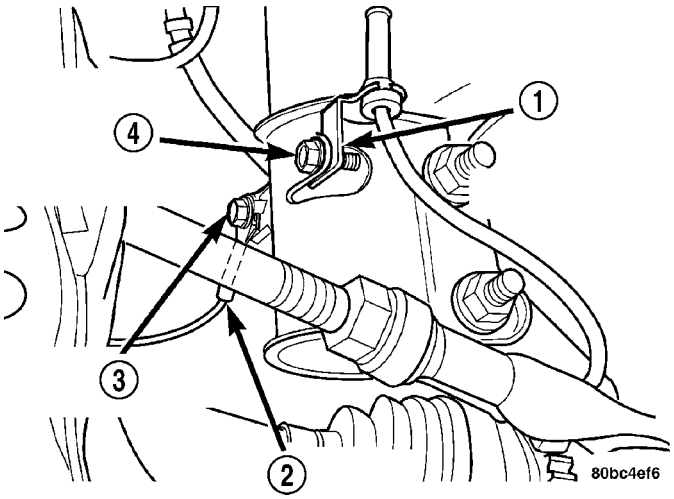

Fig. 8 Wheel Speed Sensor At Strut

1 - ABS WHEEL SPEED SENSOR ROUTING BRACKET (IF EQUIPPED)
2 - GROUND STRAP
3 - GROUND STRAP SCREW
4 - ABS SENSOR BRACKET SCREW (IF EQUIPPED)

(3) From the sensor bracket on the strut, loop the sensor cable upward, then downward at the outside of the frame rail. Install the speed sensor cable grommet onto the retaining bracket attached to the brake hose on the outside of the frame rail.

(4) Loop the wheel speed sensor cable around the bottom of the frame rail and connect it to the wiring harness connector on the inside of the frame rail (Fig. 5). Remember to push in the locking tab on the connector.

(5) If the sensor being installed is the left front, clip the speed sensor cable to the brake tube on the inside of and under the frame rail (Fig. 6).

(6) Install the tire and wheel assembly. Progressively tighten wheel mounting nuts to 135 N·m (100 ft. lbs.).

(7) Lower the vehicle.

(8) Road test vehicle to ensure proper operation of the base brakes and ABS.

REAR WHEEL SPEED SENSOR

DESCRIPTION

The Mark 20e system uses two-wire wheel speed sensors, known as active wheel speed sensors. The sensors use an electronic principle known as magnetoresistive to help increase performance and durability. The sensors convert wheel speed into a small digital signal. A wheel speed sensor is used at each wheel. The gear (tooth) type tone wheel serves as the trigger mechanism for each sensor. At each wheel of the vehicle there is one wheel speed sensor and one tone wheel.

REAR WHEEL SPEED SENSOR (Continued)

The rear wheel speed sensors are mounted through the disc brake adapter (Fig. 9) (Fig. 10). The rear tone wheels are mounted to and rotate with the hub and bearing assemblies.

The WSS air gaps are not adjustable. The initial factory WSS air gap specification can be found in SPECIFICATIONS. Each WSS is serviced individually. The tone wheels are serviced as an assembly with the hub and bearing assemblies.

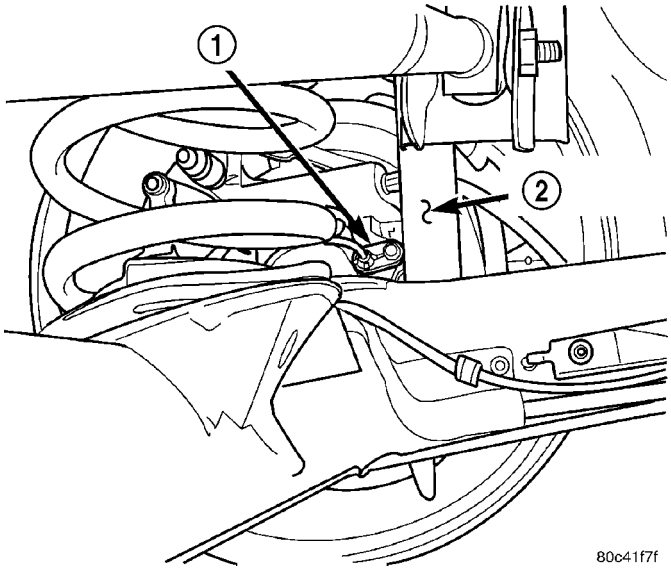

Fig. 9 Left Rear Wheel Speed Sensor

1 - LEFT REAR WHEEL SPEED SENSOR
2 - SHOCK ABSORBER

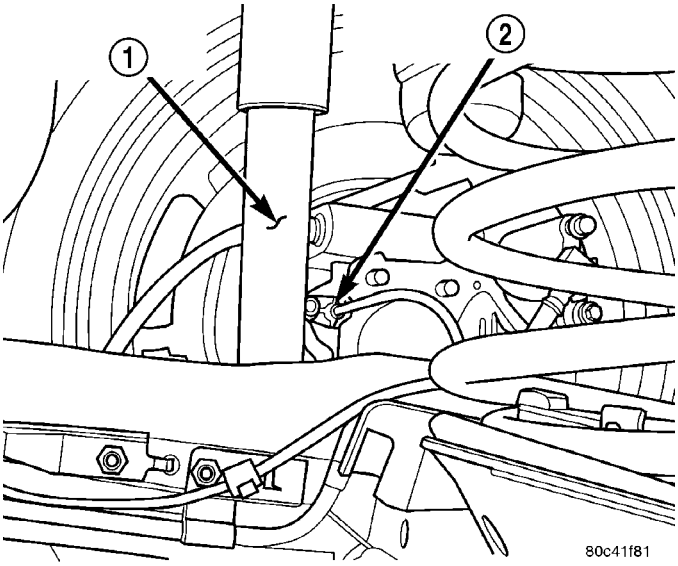

Fig. 10 Right Rear Wheel Speed Sensor

1 - SHOCK ABSORBER
2 - RIGHT REAR WHEEL SPEED SENSOR

OPERATION

The CAB sends 12 volts to power an Integrated Circuit (IC) in the sensor. The IC supplies a constant 7 mA power supply to the CAB. The relationship of the tooth on the tone wheel to the permanent magnet in the sensor, signals the IC to enable a second 7 mA power supply. The output of the sensor, sent to the CAB, is a DC voltage signal with changing voltage and current levels. The ground for the IC and the current sense circuit is provided by the CAB.

When a valley of the tone wheel is aligned with the sensor, the voltage signal is approximately 0.8 volts and a constant 7 mA current is sent to the CAB. As the tone wheel rotates, the tooth shifts the magnetic field and the IC enables a second 7 mA current source. The CAB senses a voltage signal of approximately 1.6 volts and 14 mA. The CAB measures the amperage of the digital signal for each wheel. The resulting signal is interpreted by the ABS CAB as the wheel speed.

REMOVAL

NOTE: Before proceeding, (Refer to 5 - BRAKES - WARNING)(Refer to 5 - BRAKES - CAUTION).

(1) Raise the vehicle. (Refer to LUBRICATION & MAINTENANCE/HOISTING - STANDARD PROCEDURE).

(2) Remove the tire and wheel assembly from the vehicle.

(3) Disconnect the wheel speed sensor cable connector from the vehicle wiring harness (Fig. 11). Remove the clip attaching wheel speed sensor cable connector to the vehicle's body.

(4) Disconnect the wheel speed sensor cable routing clips running along the brake tube, brake hose and axle trailing arm.

CAUTION: When removing a wheel speed sensor from the rear disc brake adapter, do not use pliers on the sensor head. This may damage the sensor head. If the sensor has seized, use a hammer and a punch to tap the edge of the sensor head ear, rocking the sensor side-to-side until free.

(5) Remove the bolt attaching the wheel speed sensor to the rear disc brake adapter (Fig. 12), then carefully remove the sensor head from the rear disc brake adapter and vehicle.

REAR WHEEL SPEED SENSOR (Continued)

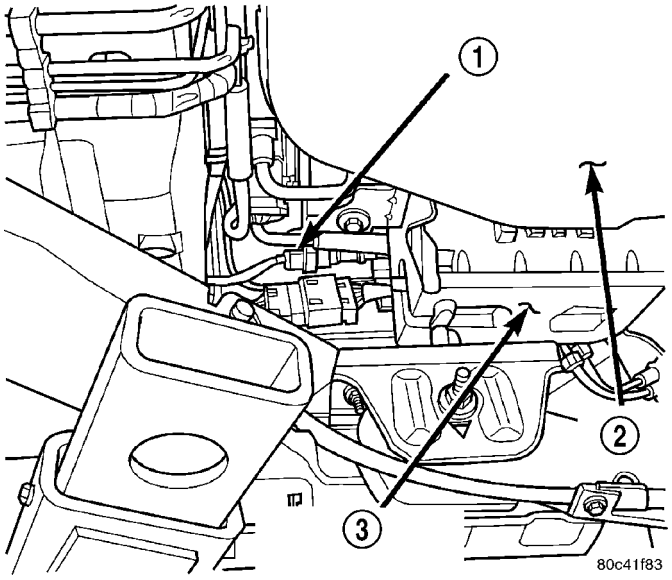

Fig. 11 Wheel Speed Sensor Connector

1 - RIGHT REAR WHEEL SPEED SENSOR CONNECTOR
2 - FUEL TANK
3 - EVAPORATIVE CANISTER

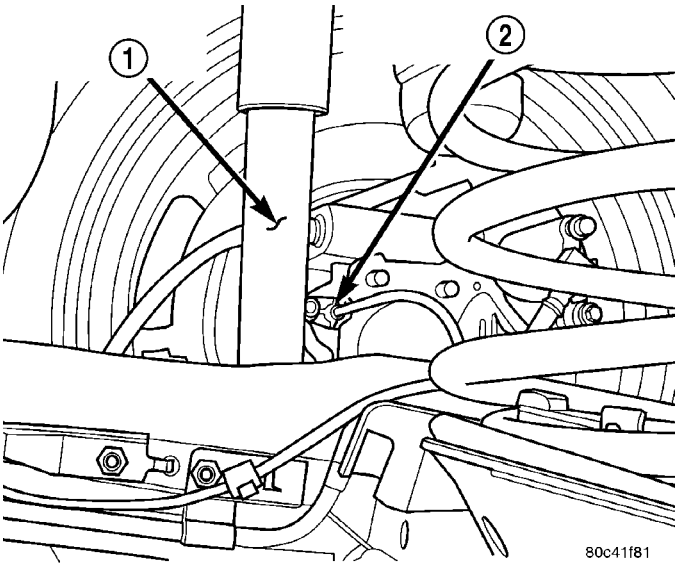

Fig. 12 Wheel Speed Sensor

1 - SHOCK ABSORBER
2 - RIGHT REAR WHEEL SPEED SENSOR

INSTALLATION

CAUTION: Failure to install speed sensor cables properly may result in contact with moving parts or an over extension of cables causing an open circuit. Be sure that cables are installed, routed, and clipped properly.

(1) Install the wheel speed sensor head into the disc brake adapter (Fig. 12).

(2) Install the wheel speed sensor mounting bolt. Tighten the mounting bolt to a torque of 12 N·m (105 in. lbs.).

(3) Install wheel speed sensor cable into the routing clips on the brake tube, brake hose and axle trailing arm.

(4) Connect the wheel speed sensor cable connector into vehicle wiring harness (Fig. 11). Install the clip attaching the wheel speed sensor cable connector to vehicle's body.

(5) Install the tire and wheel assembly on vehicle. Progressively tighten wheel mounting nuts to 135 N·m (100 ft. lbs.).

(6) Lower the vehicle.

(7) Road test the vehicle to ensure proper operation of the base brakes and ABS.

TONE WHEEL

DESCRIPTION

The tone wheel is used in conjunction with the wheel speed sensors. (Refer to 5 - BRAKES - ABS/ELECTRICAL/FRONT WHEEL SPEED SENSOR - DESCRIPTION) or (Refer to 5 - BRAKES - ABS/ELECTRICAL/REAR WHEEL SPEED SENSOR - DESCRIPTION)

OPERATION

The tone wheel is used in conjunction with the wheel speed sensors. (Refer to 5 - BRAKES - ABS/ELECTRICAL/FRONT WHEEL SPEED SENSOR - OPERATION) or (Refer to 5 - BRAKES - ABS/ELECTRICAL/REAR WHEEL SPEED SENSOR - OPERATION)

INSPECTION

Tone wheels can cause erratic wheel speed sensor signals. Inspect tone wheels for the following possible causes:

- missing, chipped, or broken teeth
- contact with the wheel speed sensor
- wheel speed sensor to tone wheel alignment
- wheel speed sensor to tone wheel clearance
- excessive tone wheel runout
- tone wheel loose on its mounting surface

If a front tone wheel is found to need replacement, the drive shaft must be replaced. No attempt should be made to replace just the tone wheel. (Refer to 3 - DIFFERENTIAL & DRIVELINE/HALF SHAFT - REMOVAL).

If a rear tone wheel is found to need replacement, the rear hub and bearing must be replaced. No attempt should be made to replace just the tone wheel. (Refer to 2 - SUSPENSION/REAR/HUB / BEARING - REMOVAL).

TONE WHEEL (Continued)

If wheel speed sensor to tone wheel contact is evident, determine the cause and correct it before replacing the wheel speed sensor or tone wheel.

Check the gap between the speed sensor head and the tone wheel to ensure it is within specifications. For wheel speed sensor air gap specifications, (Refer to 5 - BRAKES - ABS - SPECIFICATIONS).

Excessive tone wheel runout can cause erratic wheel speed sensor signals. For tone wheel runout specifications, (Refer to 5 - BRAKES - ABS - SPECIFICATIONS). If tone wheel runout is excessive, determine if it is caused by a defect in the driveshaft assembly or hub and bearing. Replace as necessary.

Tone wheels are pressed onto their mounting surfaces and should not rotate independently from the mounting surface. Replace the front driveshaft or rear hub and bearing as necessary.

TRACTION CONTROL SWITCH

REMOVAL

NOTE: The Traction Control Switch (Fig. 13) is located within the accessory switch bezel on the instrument panel.

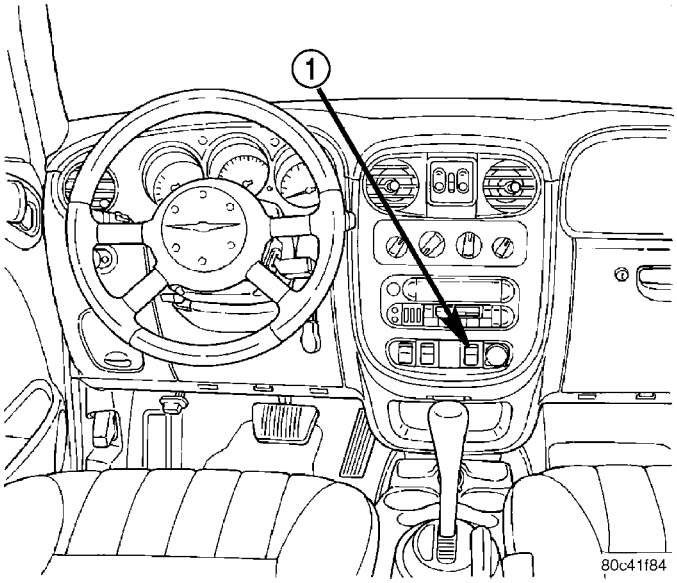

Fig. 13 Traction Control Switch Location

1 - TRACTION CONTROL SWITCH

(1) Remove the accessory switch bezel and then remove the traction control switch from it. (Refer to 23 - BODY/INSTRUMENT PANEL/ACCESSORY SWITCH BEZEL - REMOVAL)

INSTALLATION

(1) Install the traction control switch in the accessory switch bezel, then install the bezel on the instrument panel. (Refer to 23 - BODY/INSTRUMENT PANEL/ACCESSORY SWITCH BEZEL - INSTALLATION)

(2) Road test the vehicle to ensure proper operation of the switch and ABS.

HCU - HYDRAULIC CONTROL UNIT

DESCRIPTION - HYDRAULIC CONTROL UNIT (HCU)

The hydraulic control unit (HCU) is mounted to the CAB as part of the ICU (Fig. 19). The HCU controls the flow of brake fluid to the brakes using a series of valves and accumulators. A pump/motor is mounted on the HCU to supply build pressure to the brakes during an ABS stop.

VALVES AND SOLENOIDS

The valve block contains four inlet valves and four outlet solenoid valves. The inlet valves are spring-loaded in the open position and the outlet valves are spring-loaded in the closed position during normal braking. The fluid is allowed to flow from the master cylinder to the wheel brakes.

During an ABS stop, these valves cycle to maintain the proper slip ratio for each wheel. The inlet valve closes preventing further pressure increase and the outlet valve opens to provide a path from the wheel brake to the HCU accumulators and pump/motor. This releases (decays) pressure from the wheel brake, thus releasing the wheel from excessive slippage. Once the wheel is no longer slipping, the outlet valve is closed and the inlet valve is opened to reapply (build) pressure.

If the ABS includes the traction control feature, there are four other valves in the HCU. Two traction control (TC) valves, mounted in the HCU valve block, are normally in the open position and close only when the traction control is applied. There are also two shuttle valves which control pressure return to the master cylinder under ABS and traction control conditions.

HCU - HYDRAULIC CONTROL UNIT (Continued)

These TC valves are used to isolate the rear (non-driving) wheels of the vehicle from the hydraulic pressure that the HCU pump/motor is sending to the front (driving) wheels when traction control is being applied. The rear brakes need to be isolated from the master cylinder when traction control is being applied so the rear wheels do not drag.

BRAKE FLUID ACCUMULATORS

There are two fluid accumulators in the HCU: one for the primary hydraulic circuit, and one for the secondary hydraulic circuit. Each hydraulic circuit uses a 3 cc accumulator.

The fluid accumulators temporarily store brake fluid that is removed from the wheel brakes during an ABS cycle. This stored fluid is used by the pump/motor to provide build pressure for the brake hydraulic system. When the antilock stop is complete, the accumulators are drained by the pump/motor.

There are two noise dampening chambers in the HCU on this vehicle equipped with traction control.

PUMP/MOTOR

There are two pump assemblies in the HCU: one for the primary hydraulic circuit, and one for the secondary hydraulic circuit. Both pumps are driven by a common electric motor (Fig. 19). This DC-type motor is integral to the HCU and is controlled by the CAB.

The pump/motor provides the extra amount of brake fluid needed during antilock braking. Brake fluid is released to the accumulators when the outlet valve is opened during an antilock stop. The pump mechanism consists of two opposing pistons operated by an eccentric camshaft. In operation, these pistons are used to purge fluid from the accumulators back into the master cylinder circuits. When the antilock stop is complete, the pump/motor drains the accumulators.

The pump motor is also used to build pressure when the system goes into traction control mode.

The CAB may turn on the pump/motor when an antilock stop is detected. The pump/motor continues to run during the antilock stop and is turned off after the stop is complete. Under some conditions, the pump/motor runs to drain the accumulators during the next drive-off.

The pump/motor is not a serviceable item; if it requires replacement, the HCU must be replaced.

For more information, (Refer to 5 - BRAKES/HYDRAULIC/MECHANICAL/HCU (HYDRAULIC CONTROL UNIT) - OPERATION - HYDRAULIC CIRCUITS AND VALVES).

OPERATION - HYDRAULIC CIRCUITS AND VALVES

The hydraulic fluid control valves within the HCU control the flow of pressurized brake fluid to the wheel brakes during the different modes of ABS braking. The following paragraphs explain how this works. For purposes of explanation only, it is assumed that only the right front wheel is experiencing antilock braking; the following diagrams show only the right front wheel in an antilock braking operation.

NORMAL BRAKING HYDRAULIC CIRCUIT AND SOLENOID VALVE FUNCTION (ABS WITHOUT TRACTION CONTROL)

The hydraulic diagram (Fig. 14) shows the vehicle in the normal braking mode of the base brake hydraulic system. The diagram shows no wheel spin or slip occurring relative to the speed of the vehicle. The driver is applying the brake pedal which builds pressure in the brake hydraulic system to engage the brakes and stop the vehicle.

HCU - HYDRAULIC CONTROL UNIT (Continued)

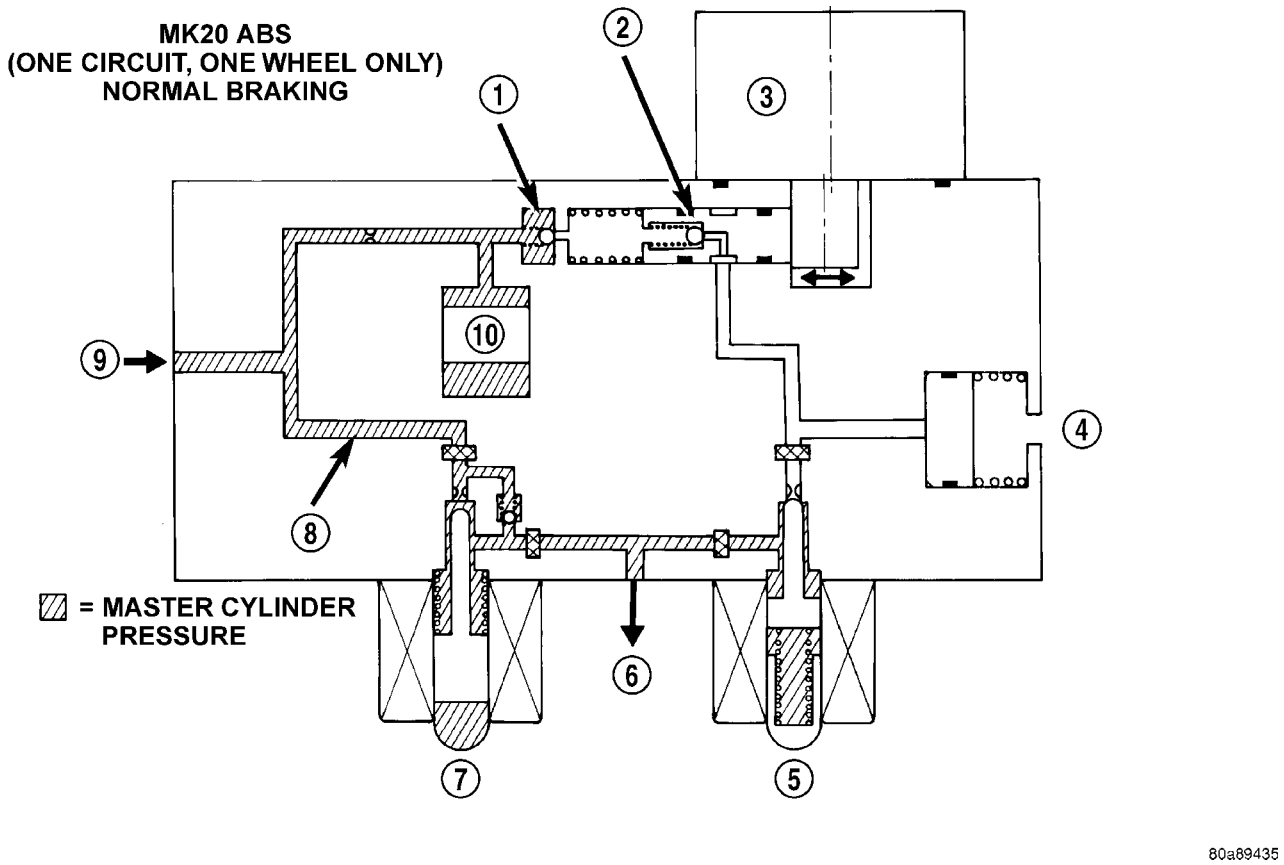

Fig. 14 Normal Braking Hydraulic Circuit (W/O Traction Control)

1 - OUTLET VALVE
2 - PUMP PISTON
3 - PUMP MOTOR (OFF)
4 - LOW PRESSURE ACCUMULATOR
5 - NORMALLY CLOSED VALVE (OFF)
6 - TO RIGHT FRONT WHEEL
7 - NORMALLY OPEN VALVE (OFF)
8 - MASTER CYLINDER PRESSURE
9 - FROM MASTER CYLINDER
10 - NOISE DAMPER CHAMBER

HCU - HYDRAULIC CONTROL UNIT (Continued)

ABS HYDRAULIC CIRCUIT AND SOLENOID VALVE FUNCTION (ABS WITHOUT TRACTION CONTROL)

The hydraulic diagram (Fig. 15) shows the vehicle in the ABS braking mode. The diagram shows one wheel is slipping because the driver is attempting to stop the vehicle at a faster rate than is allowed by the surface on which the tires are riding.

- The normally open and normally closed valves modulate (build/decay) the brake hydraulic pressure as required.
- The pump/motor is switched on so that the brake fluid from the low pressure accumulators is returned to the master cylinder circuits.
- The brake fluid is routed to either the master cylinder or the wheel brake depending on the position of the normally open valve.

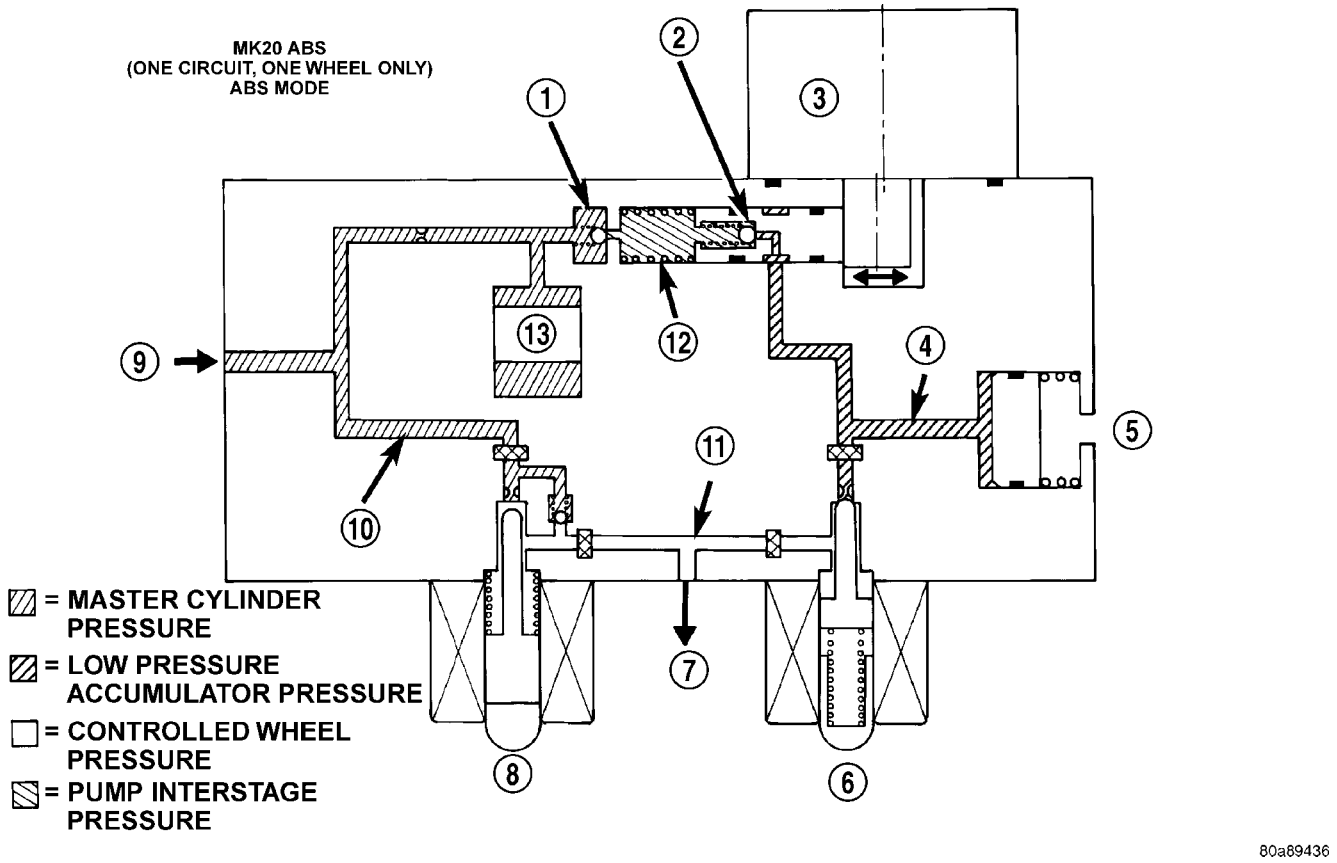

Fig. 15 ABS Mode Hydraulic Circuit (W/O Traction Control)

1 - OUTLET VALVE
2 - PUMP PISTON
3 - PUMP MOTOR (ON)
4 - LOW PRESSURE ACCUMULATOR PRESSURE
5 - LOW PRESSURE ACCUMULATOR
6 - NORMALLY CLOSED VALVE (MODULATING)
7 - TO RIGHT FRONT WHEEL
8 - NORMALLY OPEN VALVE (MODULATING)
9 - FROM MASTER CYLINDER
10 - MASTER CYLINDER PRESSURE
11 - CONTROLLED WHEEL PRESSURE
12 - PUMP INTERSTAGE PRESSURE
13 - NOISE DAMPER CHAMBER

HCU - HYDRAULIC CONTROL UNIT (Continued)

NORMAL BRAKING HYDRAULIC CIRCUIT, SOLENOID VALVE, AND SHUTTLE VALVE FUNCTION (ABS WITH TRACTION CONTROL)

The hydraulic diagram (Fig. 16) shows a vehicle with traction control in the normal braking mode. The diagram shows no wheel spin or slip occurring relative to the speed of the vehicle. The driver is applying the brake pedal which builds pressure in the brake hydraulic system to engage the brakes and stop the vehicle. The hydraulic shuttle valve closes with every brake pedal application so pressure is not created at the inlet to the pump/motor.

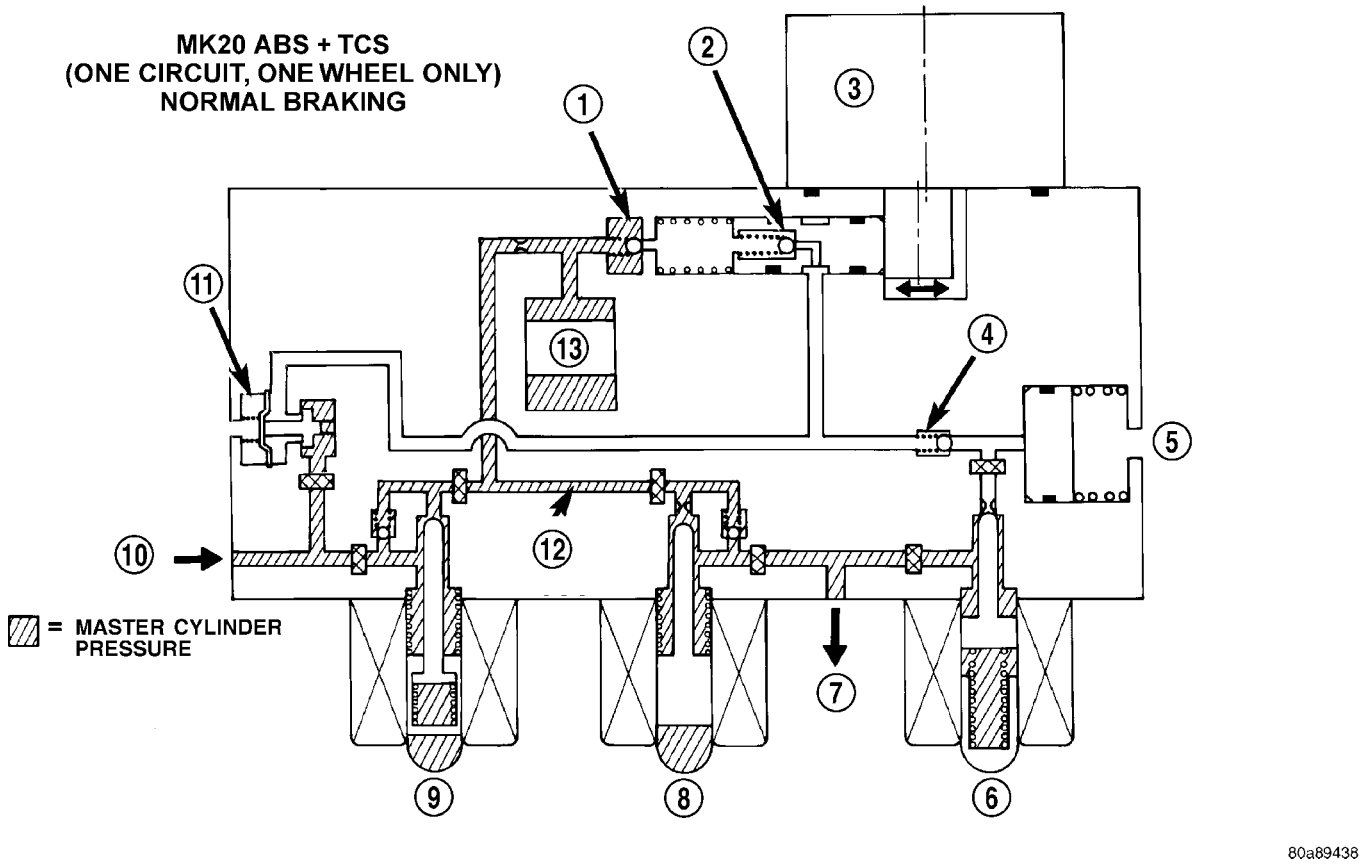

Fig. 16 ABS With Traction Control - Normal Braking Hydraulic Circuit

1 - OUTLET VALVE
2 - PUMP PISTON
3 - PUMP MOTOR (OFF)
4 - SUCTION VALVE
5 - LOW PRESSURE ACCUMULATOR
6 - NORMALLY CLOSED VALVE (OFF)
7 - TO RIGHT FRONT WHEEL
8 - NORMALLY OPEN VALVE (OFF)
9 - NORMALLY OPEN TC (ASR) VALVE (OFF)
10 - FROM MASTER CYLINDER
11 - HYDRAULIC SHUTTLE VALVE
12 - MASTER CYLINDER PRESSURE
13 - NOISE DAMPER CHAMBER

HCU - HYDRAULIC CONTROL UNIT (Continued)

ABS BRAKING HYDRAULIC CIRCUIT, SOLENOID VALVE, AND SHUTTLE VALVE FUNCTION (ABS WITH TRACTION CONTROL)

The hydraulic diagram (Fig. 17) shows the vehicle in the ABS braking mode. The diagram shows one wheel is slipping because the driver is attempting to stop the vehicle at a faster rate than is allowed by the surface on which the tires are riding.

- The hydraulic shuttle valve closes upon brake application so that the pump/motor cannot siphon brake fluid from the master cylinder.
- The normally open and normally closed valves modulate (build/decay) the brake hydraulic pressure as required.
- The pump/motor is switched on so that the brake fluid from the low pressure accumulators is returned to the master cylinder circuits.
- The brake fluid is routed to either the master cylinder or the wheel brake depending on the position of the normally open valve.

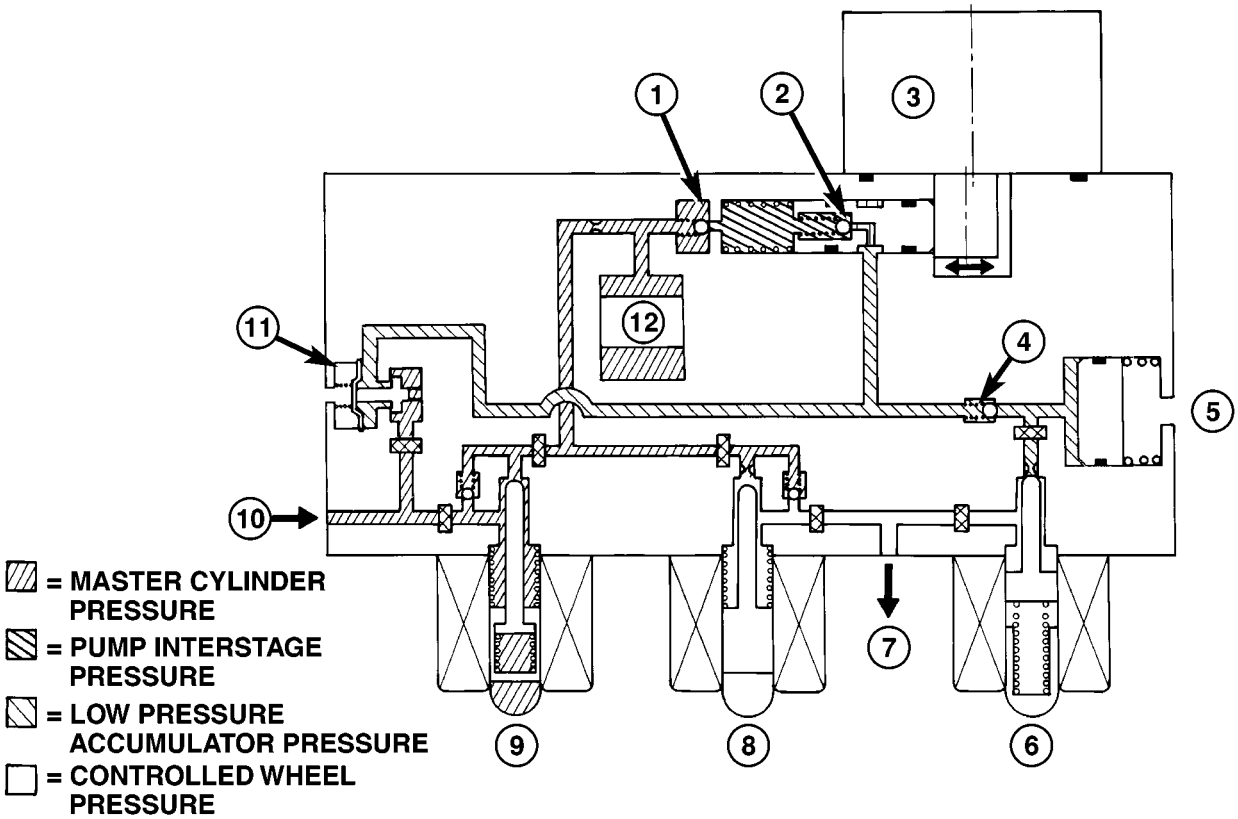

Fig. 17 ABS With Traction Control - ABS Braking Hydraulic Circuit

1 - OUTLET VALVE
2 - PUMP PISTON
3 - PUMP MOTOR
4 - SUCTION VALVE
5 - LOW PRESSRUE ACCUMULATOR
6 - NORMALLY CLOSED VALVE (MODULATING)
7 - TO RIGHT FRONT WHEEL
8 - NORMALLY OPEN VALVE (MODULATING)
9 - NORMALLY OPEN ASR VALVE (OFF)
10 - FROM MASTER CYLINDER
11 - HYDRAULIC SHUTTLE VALVE
12 - NOISE DAMPER CHAMBER

HCU - HYDRAULIC CONTROL UNIT (Continued)

ABS TRACTION CONTROL HYDRAULIC CIRCUIT, SOLENOID VALVE, AND SHUTTLE VALVE FUNCTION (ABS WITH TRACTION CONTROL)

The hydraulic diagram (Fig. 18) shows the vehicle in the traction control (TC) mode. The diagram shows a drive wheel is spinning and brake pressure is required to reduce its speed.

- The normally open TC (ASR) valve is energized to isolate the brake fluid being pumped from the master cylinder and to isolate the driven wheel.
- The normally open TC (ASR) valve bypasses the pump output back to the master cylinder at a fixed pressure setting.
- The normally open and normally closed valves modulate (build/decay) the brake pressure as required to the spinning wheel.

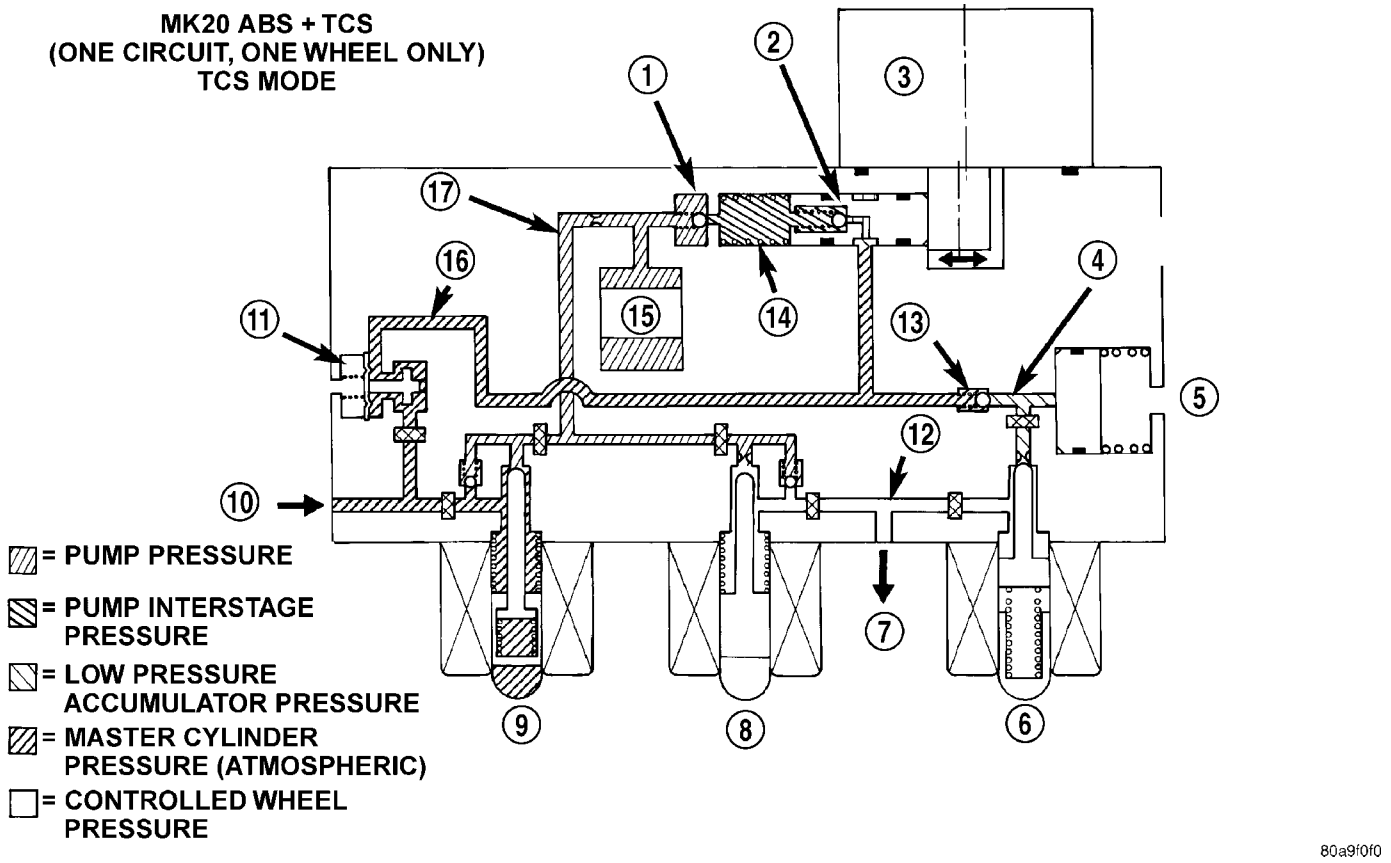

Fig. 18 Traction Control Hydraulic Circuit

1 - OUTLET VALVE
2 - PUMP PISTON
3 - PUMP MOTOR (ON)
4 - LOW PRESSURE ACCUMULATOR PRESSURE
5 - LOW PRESSURE ACCUMULATOR
6 - NORMALLY CLOSED VALVE (MODULATING)
7 - TO RIGHT FRONT WHEEL (SPINNING)
8 - NORMALLY OPEN VALVE (MODULATING)
9 - NORMALLY OPEN TC (ASR) VALVE ON (REGULATING)
10 - FROM MASTER CYLINDER
11 - HYDRAULIC SHUTTLE VALVE
12 - CONTROLLED WHEEL PRESSURE
13 - SUCTION VALVE
14 - PUMP INTERSTAGE PRESSURE
15 - NOISE DAMPER CHAMBER
16 - MASTER CYLINDER PRESSURE
17 - PUMP PRESSURE

ICU - INTEGRATED CONTROL UNIT

DESCRIPTION

The hydraulic control unit (HCU) and the controller antilock brake (CAB) used with this antilock brake system are combined (integrated) into one unit, which is called the integrated control unit (ICU) (Fig. 19). The ICU is located on the driver's side of the vehicle, below the master cylinder (Fig. 20).

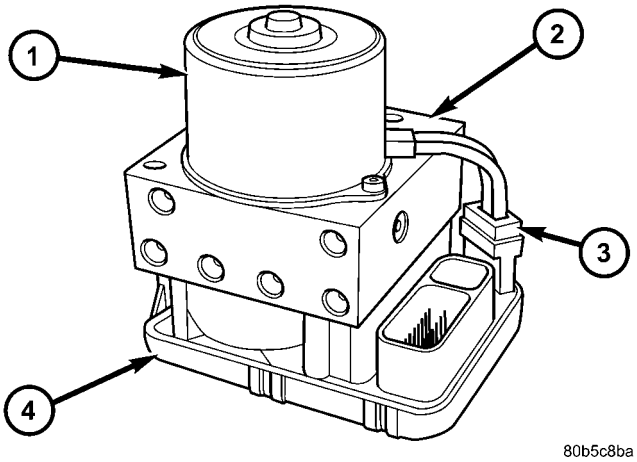

Fig. 19 Integrated Control Unit (ICU)

1 - PUMP/MOTOR
2 - HCU
3 - PUMP/MOTOR WIRING CONNECTOR
4 - CAB

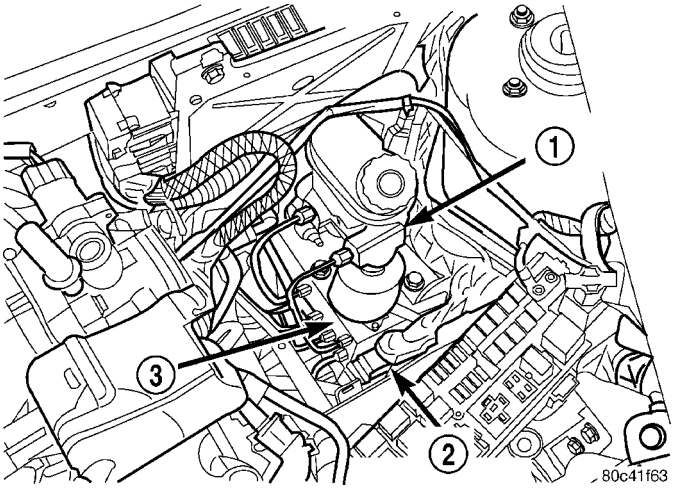

Fig. 20 Master Cylinder And ICU

1 - MASTER CYLINDER
2 - CAB CONNECTOR
3 - ICU

Two different ICU's (HCU and CAB) are used on this vehicle depending on whether or not the vehicle is equipped with traction control. The HCU on a vehicle equipped with traction control has a valve block that is approximately one inch longer than a HCU on a vehicle that is equipped with ABS only.

The ABS-only ICU consists of the following components: the CAB, eight (build/decay) solenoid valves (four inlet valves and four outlet valves), valve block, fluid accumulators, a pump, and an electric motor.

The ABS with traction control ICU consists of the following components: the CAB, eight (build/decay) solenoid valves (four inlet valves and four outlet valves), two traction control solenoid valves, two hydraulic shuttle valves, valve block, fluid accumulators, a pump, and an electric pump/motor.

The replaceable components of the ICU are the HCU and the CAB. No attempt should be made to service any components of the HCU or CAB.

For additional information on the CAB, (Refer to 8 - ELECTRICAL/ELECTRONIC CONTROL MODULES/CONTROLLER ANTILOCK BRAKE - DESCRIPTION). For additional information on the HCU, (Refer to 5 - BRAKES - ABS/HYDRAULIC/MECHANICAL/HCU (HYDRAULIC CONTROL UNIT) - DESCRIPTION).

OPERATION

For information of the ICU, refer to these individual components of the ICU:

- CONTROLLER ANTILOCK BRAKE (CAB) (Refer to 8 - ELECTRICAL/ELECTRONIC CONTROL MODULES/CONTROLLER ANTILOCK BRAKE - OPERATION)
- HYDRAULIC CONTROL UNIT (HCU) (Refer to 5 - BRAKES - ABS/HYDRAULIC/MECHANICAL/HCU (HYDRAULIC CONTROL UNIT) - OPERATION)

REMOVAL

NOTE: If servicing the controller antilock brake (CAB) only, the CAB can be serviced with the ICU mounted in the vehicle. (Refer to 8 - ELECTRICAL/ELECTRONIC CONTROL MODULES/CONTROLLER ANTILOCK BRAKE - REMOVAL)

NOTE: Before proceeding, (Refer to 5 - BRAKES - WARNING)(Refer to 5 - BRAKES - CAUTION).

ICU - INTEGRATED CONTROL UNIT (Continued)

CAUTION: The vacuum in the power brake booster must be pumped down before removing the master cylinder to prevent the booster from sucking in any contamination. This can be done by pumping the brake pedal while the engine is not running until a firm brake pedal is achieved.

(1) With the engine not running, pump the brake pedal 4-5 strokes until the pedal feel is firm.

(2) Unclip the air cleaner cover (two clips) and move the cover aside.

(3) Remove the air cleaner housing by pulling straight up.

(4) Disconnect the negative (ground) cable from the battery and isolate the cable.

(5) Unlatch the power distribution center, lift it up, and move it to the side.

(6) Remove the vehicle wiring harness connector from brake fluid level switch in master cylinder brake fluid reservoir (Fig. 21).

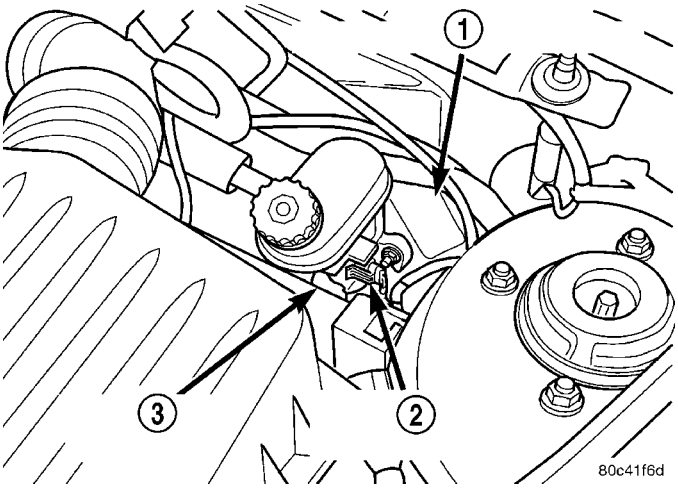

Fig. 21 Master Cylinder

1 - POWER BRAKE BOOSTER
2 - BRAKE FLUID LEVEL SWITCH
3 - MASTER CYLINDER

(7) Tag the brake tubes coming from the master cylinder as primary and secondary (Fig. 22). This is done to avoid mix-up once the tubes are removed from the vehicle.

(8) Disconnect the two brake tubes from the master cylinder primary and secondary ports (Fig. 22). Install plugs at all of the open brake tube outlets on the master cylinder.

(9) Disconnect and remove the primary and secondary brake tubes coming from the master cylinder at the ICU hydraulic control unit (HCU) (Fig. 22).

(10) Clean the area around where the master cylinder attaches to the power brake booster using a suitable brake cleaner such as Mopar® Brake Parts Cleaner or equivalent.

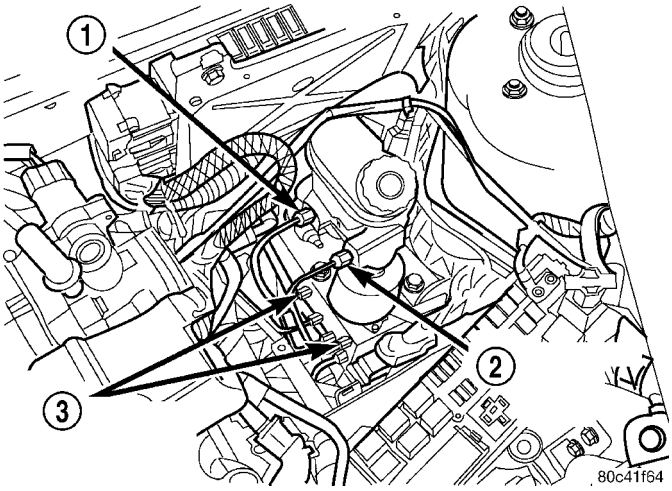

Fig. 22 Primary and Secondary Brake Tubes

1 - PRIMARY BRAKE TUBE
2 - SECONDARY BRAKE TUBE
3 - BRAKE TUBES FROM MASTER CYLINDER

(11) Remove the two nuts attaching the master cylinder to the power brake booster.

(12) Slide the master cylinder straight out of the power brake booster.

(13) Disconnect the brake tubes going to each individual brake at the HCU (Fig. 23).

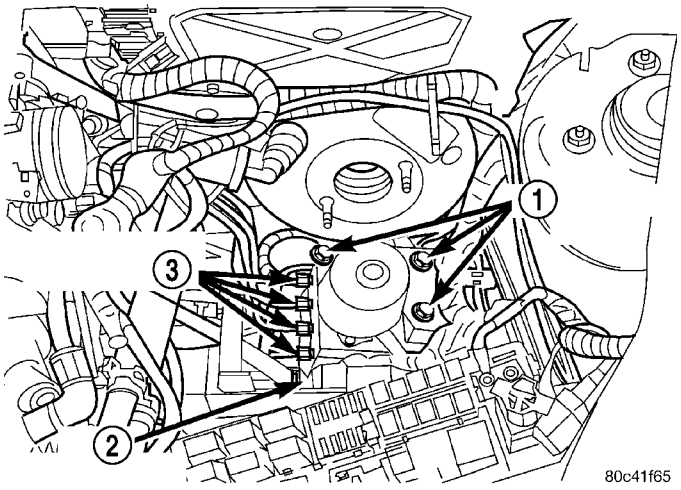

Fig. 23 ICU Connections

1 - ICU MOUNTING BOLTS
2 - CAB CONNECTOR
3 - BRAKE TUBES TO BRAKES

(14) Disconnect the 24-way connector from the controller antilock brake (CAB) mounted on the integrated control unit (ICU) and move it out of the way (Fig. 23). The connector is disconnected by pulling outward on the connector lock. This will unlock and raise the 24-way connector out of the socket on the CAB.

(15) Remove the 3 bolts attaching the ICU to its mounting bracket (Fig. 23).

ICU - INTEGRATED CONTROL UNIT (Continued)

(16) Remove the ICU from the vehicle.

(17) To separate the CAB from the HCU, (Refer to 5 - BRAKES/HYDRAULIC/MECHANICAL/ICU (INTEGRATED CONTROL UNIT) - DISASSEMBLY).

DISASSEMBLY - ICU

(1) Disconnect the pump/motor wiring harness from the CAB (Fig. 24).

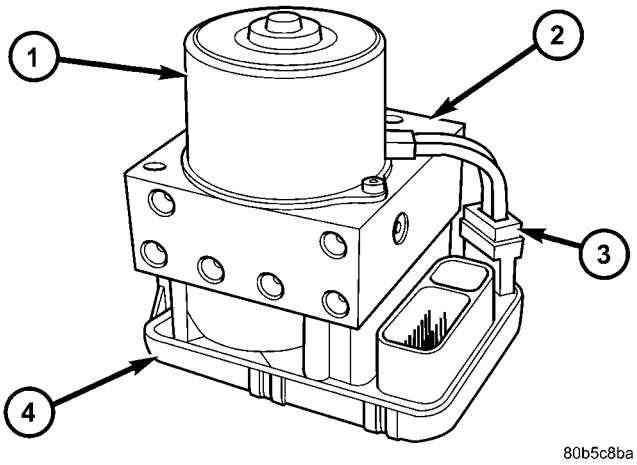

Fig. 24 Integrated Control Unit (ICU)

1 - PUMP/MOTOR
2 - HCU
3 - PUMP/MOTOR WIRING CONNECTOR
4 - CAB

(2) Remove the 4 bolts attaching the CAB to the HCU (Fig. 25).

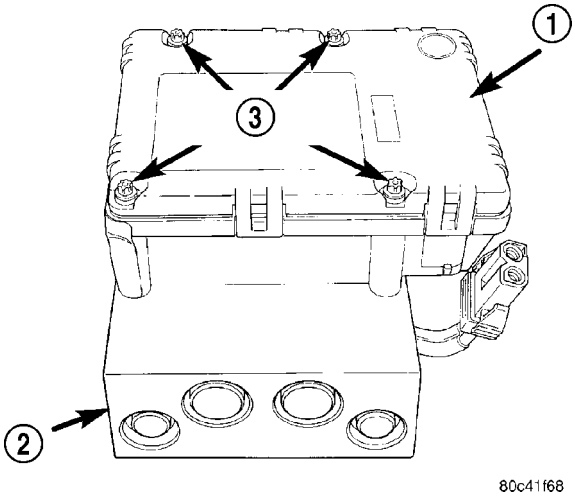

Fig. 25 CAB Attaching Bolts

1 - CAB
2 - HCU VALVE BLOCK
3 - MOUNTING BOLTS

(3) Remove the CAB from the HCU (Fig. 26).

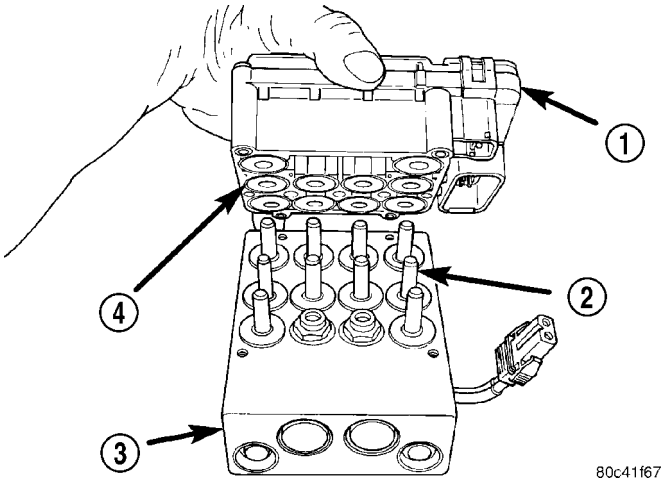

Fig. 26 Remove/Install CAB

1 - CAB
2 - VALVES
3 - HCU VALVE BLOCK
4 - SOLENOIDS

ASSEMBLY - ICU

(1) Install the CAB on the HCU (Fig. 26).

(2) Install the 4 bolts mounting the CAB to the HCU (Fig. 25). Tighten the CAB mounting bolts to a torque of 2 N·m (17 in. lbs.).

(3) Plug the pump/motor wiring harness into the CAB (Fig. 24).

(4) Install the ICU in the vehicle. (Refer to 5 - BRAKES/HYDRAULIC/MECHANICAL/ICU (INTEGRATED CONTROL UNIT) - INSTALLATION)

INSTALLATION

(1) Install the ICU onto its mounting bracket.

(2) Install the 3 bolts attaching the ICU to the mounting bracket (Fig. 23). Tighten the 3 mounting bolts to a torque of 11 N·m (97 in. lbs.)

CAUTION: Before installing the 24-way connector in the CAB, be sure the seal is properly installed in the connector.

(3) Install the 24-way connector into the socket of the CAB as follows:

- Position the 24-way connector in the socket of the CAB and carefully push it down as far as possible (Fig. 23).
- When the connector is fully seated into the CAB socket, push the connector lock inward. This pulls the connector into the socket of the CAB and locks it in the installed position.

ICU - INTEGRATED CONTROL UNIT (Continued)

(4) Install the four brake tubes going to the brakes into their respective outlet ports on the ICU HCU (Fig. 23). Using a crow foot on a torque wrench, tighten the four brake tube nuts to a torque of 17 N·m (145 in. lbs.).

(5) Wipe the face of the power brake booster clean where the master cylinder seal comes in contact when it's installed. Do not get any cleaner or debris inside the booster.

(6) Position the master cylinder on the studs of the power brake booster, aligning the push rod of the power brake booster with master cylinder piston push rod. Carefully push the master cylinder onto the studs until it contacts the face of the booster.

(7) Install the two master cylinder mounting nuts and tighten each to a torque of 18 N·m (160 in. lbs.).

NOTE: When installing the brake tubes from the master cylinder on the HCU, the brake tube with the small tube nut is to be installed in the forward-most port on the HCU with the small end going toward the master cylinder secondary port.

(8) Install the primary and secondary brake tubes from the master cylinder onto the HCU (Fig. 22). Do not completely tighten the primary and secondary tubes at this time.

(9) Connect the two brake tubes to the master cylinder primary and secondary ports (Fig. 22).

(10) Using a crow foot on a torque wrench, tighten the primary and secondary brake tube nuts at both the master cylinder and HCU to a torque of 17 N·m (145 in. lbs.).

(11) Connect the brake fluid level switch wiring connector.

(12) Install the power distribution center.

(13) Connect the negative (ground) cable on the battery.

(14) Install the air cleaner housing.

(15) Install the air cleaner cover.

(16) Hook up the DRBIII® to initialize the new CAB.

(17) Fill the master cylinder to the proper fill level and bleed the base and ABS hydraulic systems. (Refer to 5 - BRAKES - ABS - STANDARD PROCEDURE)

(18) Road test the vehicle to ensure proper operation of the base and antilock brake systems.

CLUTCH

TABLE OF CONTENTS

page

CLUTCH
DESCRIPTION 2
OPERATION 2
DIAGNOSIS AND TESTING
DIAGNOSIS AND TESTING—CLUTCH SYSTEM DIAGNOSIS 3
DIAGNOSIS AND TESTING - CLUTCH CHATTER COMPLAINTS 6
DIAGNOSIS AND TESTING - DRIVE PLATE MISALIGNMENT 6
DIAGNOSIS AND TESTING - CLASH-INTO-REVERSE COMPLAINTS 6
STANDARD PROCEDURE—BLEEDING CLUTCH HYDRAULIC CIRCUIT 6
SPECIFICATIONS
CLUTCH/HYDRAULICS/PEDALS 9
CLUTCH DISC AND PRESSURE PLATE
REMOVAL
REMOVAL—1.6L 10
REMOVAL—2.2L TD 11
INSTALLATION
INSTALLATION—1.6L 11
INSTALLATION—2.2L TD 12
CLUTCH INTERLOCK/UPSTOP SWITCH
DESCRIPTION 12
OPERATION 13
DIAGNOSIS AND TESTING—CLUTCH INTERLOCK/UPSTOP SWITCH 13
REMOVAL
REMOVAL - LHD 16
REMOVAL - RHD 17
INSTALLATION
INSTALLATION - LHD 17
INSTALLATION - RHD 18
CLUTCH RELEASE BEARING
DESCRIPTION 18
OPERATION 19
REMOVAL 19
INSTALLATION 19
FLYWHEEL
DESCRIPTION 20
OPERATION 21
REMOVAL 21
INSTALLATION 21
MASTER CYLINDER - LHD
DESCRIPTION 22
OPERATION 22
REMOVAL 22
INSTALLATION 25
MASTER CYLINDER - RHD
DESCRIPTION 26
OPERATION 26
REMOVAL 26
INSTALLATION 29
MODULAR CLUTCH
DESCRIPTION 30
OPERATION 30
REMOVAL 31
INSPECTION 31
INSTALLATION 32
SLAVE CYLINDER
DESCRIPTION 32
REMOVAL
REMOVAL—1.6/2.0/2.4L (Except Diesel and Turbo) 33
REMOVAL—DIESEL AND TURBO MODELS 34
INSTALLATION
INSTALLATION—1.6/2.0/2.4L MODELS (Except Diesel and Turbo) 34
INSTALLATION—DIESEL AND TURBO MODELS 34

CLUTCH

DESCRIPTION

The typical clutch hydraulic system (Fig. 1) (Fig. 2) consists of a clutch master cylinder and integral reservoir, a clutch slave cylinder, and an interconnecting fluid line. LHD models have an adjustable pedal pushrod.

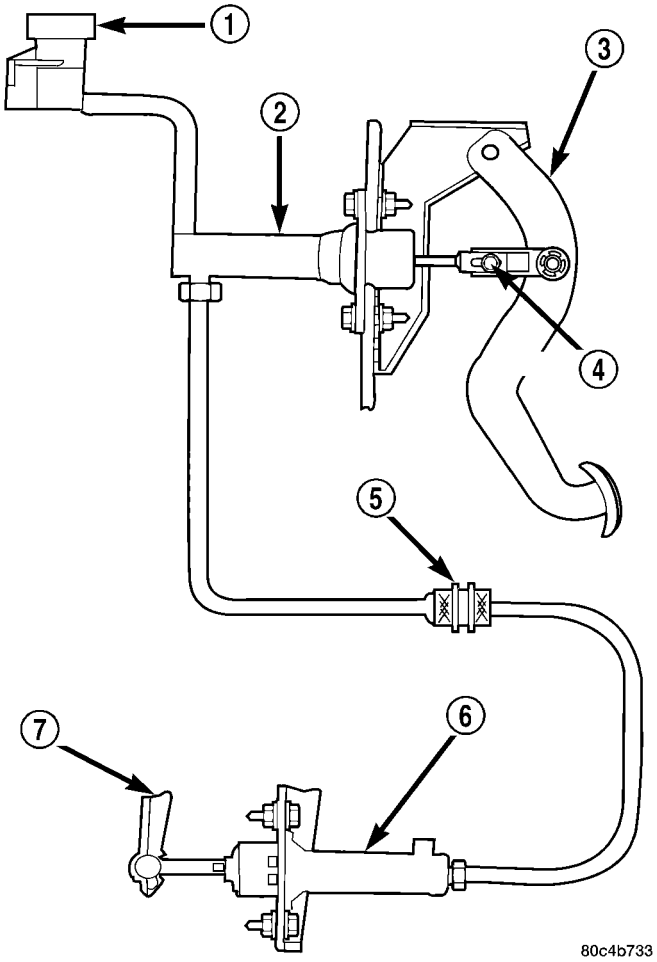

Fig. 1 LHD Clutch Hydraulic System—Typical

1 - RESERVOIR
2 - MASTER CYLINDER
3 - CLUTCH PEDAL
4 - ADJUSTMENT SCREW
5 - QUICK CONNECT - GETRAG MTX ONLY
6 - SLAVE CYLINDER
7 - RELEASE LEVER

FLUID

CAUTION: Never use any type of petroleum-based fluid (engine oil, transmission oil, power steering fluid, etc.) in the clutch hydraulic system. Use of such fluids will result in master/slave cylinder seal damage, and cause a failure of the hydraulic clutch release system.

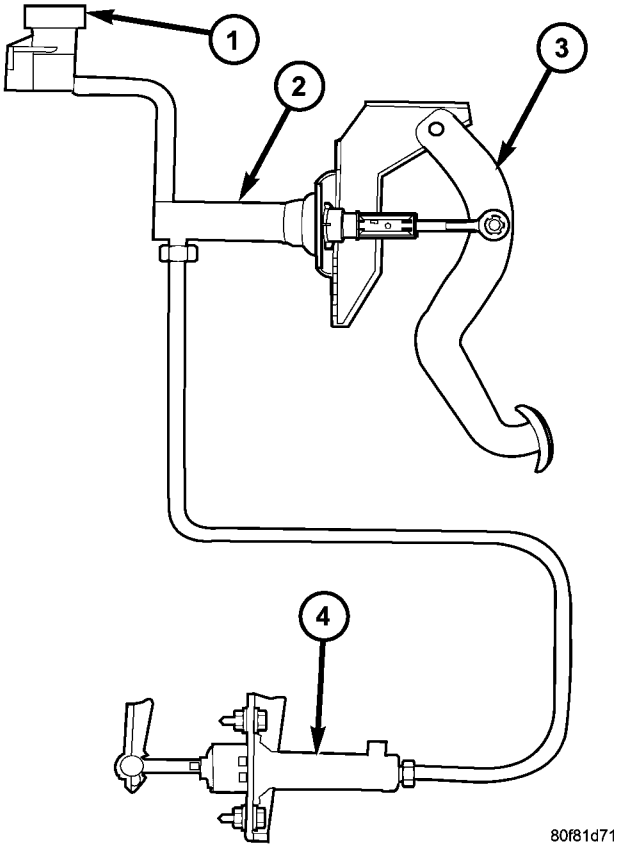

Fig. 2 RHD Clutch Hydraulic System—Typical

1 - RESERVOIR
2 - MASTER CYLINDER
3 - PEDAL ASSEMBLY
4 - SLAVE CYLINDER

NOTE: The clutch hydraulic system and replacement components are pre-filled, and under normal operating conditions, additional fluid is not required for the life of the vehicle.

The fluid required for use in the clutch hydraulic system is brake fluid conforming to DOT 3 specifications and J1703 standards. No other type of fluid is recommended or approved for use in the clutch hydraulic system. use only Mopar® brake fluid or equivalent from a tightly sealed container.

OPERATION

T350-Equipped Models

The clutch hydraulic system is responsible for engaging and disengaging the clutch. Depressing the clutch pedal develops fluid pressure in the clutch master cylinder. This pressure is transmitted to the slave cylinder through a connecting line. In turn, the slave cylinder operates the clutch release lever (Fig. 1) (Fig. 2).

CLUTCH (Continued)

Slave cylinder spring force causes the release lever to hold the release bearing in contact with the diaphragm spring, also known as bearing preload. During a clutch pedal actuation, the hydraulic fluid pressure applies additional force to the release lever. As additional force is applied, the bearing presses the diaphragm spring fingers inward on the fulcrums. This action moves the pressure plate rearward, relieving clamp force on the disc.

G288-Equipped Models

The clutch hydraulic system is responsible for engaging and disengaging the clutch. Depressing the clutch pedal develops fluid pressure in the clutch master cylinder. This pressure is transmitted to the slave cylinder through a connecting line.

Slave cylinder force transmits through the integral release bearing, which is in contact with the pressure plate diaphragm spring. As additional force is applied, the bearing depresses the diaphragm spring fingers inward on the fulcrums. The action moves the pressure plate rearward, relieving clamping force on the clutch disc.

DIAGNOSIS AND TESTING

DIAGNOSIS AND TESTING—CLUTCH SYSTEM DIAGNOSIS

Clutch problem diagnosis will generally require a road test to determine the type of fault. Component inspection will then determine the problem after road testing.

Drive the vehicle at normal speeds during road test. Shift the transaxle through all gear ranges and observe clutch action. If chatter, grab, slip, or improper release is experienced, remove and inspect the clutch components. If the problem is noise or hard shifting, further diagnosis may be needed. The transaxle or other driveline components may actually be at fault.

SERVICE DIAGNOSIS - CLUTCH GRAB/CHATTER

CONDITION	POSSIBLE CAUSES	CORRECTION
CLUTCH DISC FACING COVERED WITH OIL OR GREASE	Oil leak at engine rear main or transaxle input shaft seal.	2.0/2.4L - Correct leak and replace modular clutch assembly. 1.6L/Diesel/Turbo - Clean pressure plate, flywheel, and replace clutch disc.
	Too much grease applied to splines of disc and input shaft.	Apply lighter coating of grease to splines.
NO FAULT FOUND WITH CLUTCH COMPONENTS	Problem actually related to suspension or driveline component.	Further diagnosis required. Check engine/transmission mounts, suspension attaching parts and other driveline components as needed.
	Engine related problems.	Check EFI and ignition systems.
PARTIAL ENGAGEMENT OF CLUTCH DISC	Clutch cover, spring, or release fingers bent, distorted (rough handling, improper assembly).	Replace clutch assembly.
	Clutch disc damaged or distorted.	Replace clutch assembly.
	Clutch misalignment.	2.0/2.4L and Turbo - Verify modular clutch pilot plate alignment to crankshaft. Replace the modular clutch assembly if the pilot plate is loose or bent. 1.6L and Diesel - Check alignment and runout of flywheel, disc, or cover. Check clutch housing to engine dowels and dowel holes for damage. Correct as necessary.

CLUTCH (Continued)

SERVICE DIAGNOSIS - CLUTCH SLIPS

CONDITION	POSSIBLE CAUSES	CORRECTION
DISC FACING WORN OUT	Normal wear.	Replace clutch assembly.
	Driver frequently rides (slips) clutch, results in rapid wear, overheating.	Replace clutch assembly.
	Insufficient clutch cover diaphragm spring tension	Replace clutch assembly.
CLUTCH DISC FACING CONTAMINATED WITH OIL OR GREASE	Leak at rear main oil seal or transaxle input shaft seal	2.0/2.4L - Replace leaking seals. Replace clutch assembly. 1.6L/Diesel/Turbo - Replace leaking seals. Clean the pressure plate and flywheel surface and replace clutch disc.
	Excessive amount of grease applied to input shaft splines	2.0/2.4L - Apply less grease to input shaft. Replace clutch assembly. 1.6L/Diesel/Turbo - Apply less grease to input shaft. Clean the pressure plate and flywheel surface and replace clutch disc.
	Road splash, water entering housing	Seal housing. Inspect clutch assembly.
	Concentric Slave Cylinder leaking hydraulic fluid	Replace Concentric Slave Cylinder (CSC)
CLUTCH IS RUNNING PARTIALLY DISENGAGED	Release bearing sticking or binding, does not return to normal running position.	Verify that bearing is actually binding. Then, replace bearing and transmission front bearing retainer if sleeve surface is damaged.
	Clutch master cylinder pushrod not adjusted properly (LHD Models), causing high preload.	Verify that pushrod adjustment is correct (LHD Models).
	Slave cylinder binding	Replace slave cylinder
CLUTCH DISC FACINGS HAVE FRACTURED INTO SMALL PIECES	Driver performs a 5-1 downshift at vehicle speed in excess of 60 miles per hour	Alert driver to problem cause. Replace clutch assembly. Inspect slave cylinder, fork, and bearing for damage.
	Leak at rear main or transaxle input shaft seal	2.0/2.4L - Replace seal. Replace clutch assembly. 1.6L/Diesel/Turbo - Replace seal. Clean the pressure plate and flywheel surface and replace clutch disc.
	Excessive heat from slippage	Replace Clutch Assembly

CLUTCH (Continued)

SERVICE DIAGNOSIS - IMPROPER CLUTCH RELEASE

CONDITION	POSSIBLE CAUSES	CORRECTION
CLUTCH DISC BINDS ON INPUT SHAFT SPLINES	Clutch disc hub splines damaged during installation	Clean, smooth, and lubricate disc and shaft splines. Replace modular clutch assembly, or clutch disc, and/or input shaft if splines are severely damaged.
	Input shaft splines rough, damaged.	Clean input shaft splines. Then lube.
	Corrosion or rust formations on splines of input shaft and disc	Clean input shaft splines and disc splines, then lube
CLUTCH DISC RUSTED TO FLYWHEEL AND/OR PRESSURE PLATE	Occurs in vehicles stored or not driven for extended period of time. Also occurs after steam cleaning if vehicle is not used for extended period.	Replace clutch assembly.
CLUTCH WILL NOT DISENGAGE PROPERLY	Disc bent, distorted during transaxle installation	Replace clutch assembly.
	Clutch cover diaphragm spring damaged during transaxle installation	Replace clutch assembly.
	Release lever bent, loose, or damaged	Replace release lever if worn or damaged
	Air in clutch hydraulic system.	Bleed clutch hydraulic system to purge air.
	Clutch master cylinder or slave cylinder leaking	Check and replace master and/or slave cylinder
	Master cylinder adjustable pushrod loose or damaged	Inspect. Tighten adjustment fastener or replace master cylinder.
	Pushrod not retained to clutch pedal pin.	Inspect pushrod & busing. Replace as necessary.

SERVICE DIAGNOSIS - CLUTCH PEDAL NOISE

CONDITION	POSSIBLE CAUSES	CORRECTION
CLUTCH PEDAL SQUEAKS WHEN DEPRESSED TO FLOOR	Pedal bushings worn out or inadequate lubrication	Replace or lubricate bushings
	Clutch pedal return spring worn out	Lubricate or replace return spring

CLUTCH (Continued)

DIAGNOSIS AND TESTING - CLUTCH CHATTER COMPLAINTS

For all clutch chatter complaints, perform the following:

(1) Check for loose, misaligned, or broken engine and transmission mounts. If present, they should be corrected at this time. Test vehicle for chatter. If chatter is gone, there is no need to go any further.

(2) If chatter persists, check hydraulic clutch release system is functioning properly.

(3) Check for loose connections in drivetrain. Correct any problems and determine if clutch chatter complaints have been satisfied. If not:

(a) Remove transaxle.

(b) Check to see if the release bearing is sticky or binding. Replace bearing, if needed.

(c) Check linkage for excessive wear on the pivot stud and fork fingers. Replace all worn parts.

(d) Check clutch assembly for contamination (dirt, oil). Replace clutch assembly, if required.

(e) Check to see if the clutch disc hub splines are damaged. Replace with new clutch assembly, if necessary.

(f) Check input shaft splines for damage. Replace, if necessary.

(g) Check for uneven wear on clutch fingers.

(h) Check for broken clutch cover diaphragm spring fingers. Replace with new clutch assembly, if necessary.

DIAGNOSIS AND TESTING - DRIVE PLATE MISALIGNMENT

Common causes of misalignment are:

- Heat warping
- Mounting drive plate on a dirty crankshaft flange
- Incorrect bolt tightening
- Improper seating on the crankshaft shoulder
- Loose crankshaft bolts

Clean the crankshaft flange before mounting the drive plate. Dirt and grease on the flange surface may misalign the flywheel, causing excessive runout. Use new bolts when mounting drive plate to crankshaft. Tighten drive plate bolts to specified torque only. Over-tightening can distort the drive plate hub causing excessive runout.

DIAGNOSIS AND TESTING - CLASH-INTO-REVERSE COMPLAINTS

All T350 manual transaxles are equipped with a reverse brake. It prevents clash when shifting into reverse, but only if the vehicle is not moving.

(1) Depress clutch pedal to floor and hold. After three seconds, shift to reverse. If clash is present, clutch has excessive spin time, and the reverse brake may not be functioning.

(2) Remove transaxle.

(3) Check the input shaft spline, clutch disc splines, and release bearing for dry rust. If present, clean rust off and apply a light coat of bearing grease to the input shaft splines. Apply grease on the input shaft splines only where the clutch disc slides. Verify that the clutch disc slides freely along the input shaft spline.

(4) Check to see if the clutch disc hub splines are damaged, and replace with new clutch assembly if required.

(5) Check the input shaft for damaged splines. Replace as necessary.

(6) Check for broken clutch cover diaphragm spring fingers.

(7) Install clutch assembly and transaxle.

STANDARD PROCEDURE—BLEEDING CLUTCH HYDRAULIC CIRCUIT

NOTE: It is necessary to bleed the clutch hydraulic release system if the system has lost an excessive amount of fluid and has ingressed air into the circuit. Air in the system typically results in a spongy pedal feel, and/or improper clutch release. If air cannot be removed from the system using this procedure, it is necessary to replace BOTH the clutch master cylinder and slave cylinder assemblies.

CLUTCH (Continued)

1.6/2.0/2.4L MODELS (Except Turbo)

From driver's seat, actuate clutch pedal 60–100 times. Verify clutch operation/pedal feel. If pedal still feels spongy, or clutch does not fully disengage, excessive air is still trapped within the system. Perform the following procedure:

(1) Verify fluid level in clutch master cylinder reservoir. Top off with DOT 3 brake fluid as necessary.

(2) Raise vehicle on hoist.

(3) Remove clutch slave cylinder assembly from the transaxle case (Fig. 3) (Fig. 4), **but do not disconnect from the system**. Allow the slave cylinder hang, making it the lowest part of the system.

CAUTION: While slave cylinder is detached from the transaxle, DO NOT actuate the clutch master cylinder. Damage to the slave cylinder will result.

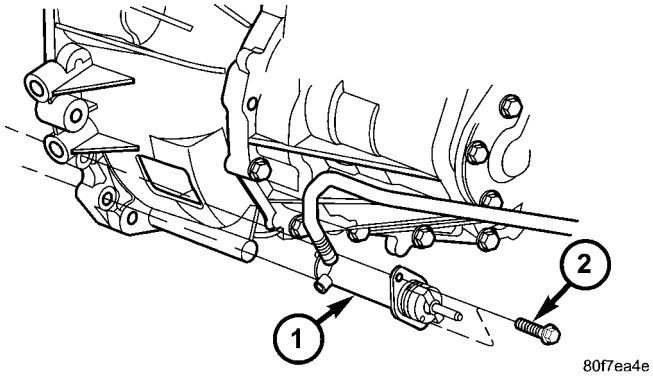

Fig. 3 Clutch Slave Cylinder at Transaxle- 1.6L Models

1 - SLAVE CYLINDER
2 - BOLT

(4) Depress slave cylinder pushrod until it bottoms and then release. Repeat this at least ten (10) times, forcing trapped air upwards and out of the system.

(5) Re-install slave cylinder into position. **1.6L equipped models:** Torque slave cylinder to case bolt to 12 N·m (105 in. lbs.). **2.0/2.4L equipped models:** Torque slave cylinder to case bolt to 19 N·m (168 in. lbs.).

(6) Lower vehicle.

(7) Check and adjust clutch master cylinder fluid level. Actuate clutch pedal thirty (30) times. Verify clutch operation/pedal feel. If pedal still feels spongy, or clutch does not fully disengage, air is still trapped within the system. Repeat Step 3 - Step 7 until air is purged. If several attempts at purging air from the system are unsuccessful, replace both the clutch master cylinder and slave cylinder assemblies.

(8) Raise vehicle.

(9) Lower vehicle.

(10) Top off clutch master cylinder fluid level with DOT 3 brake fluid as necessary.

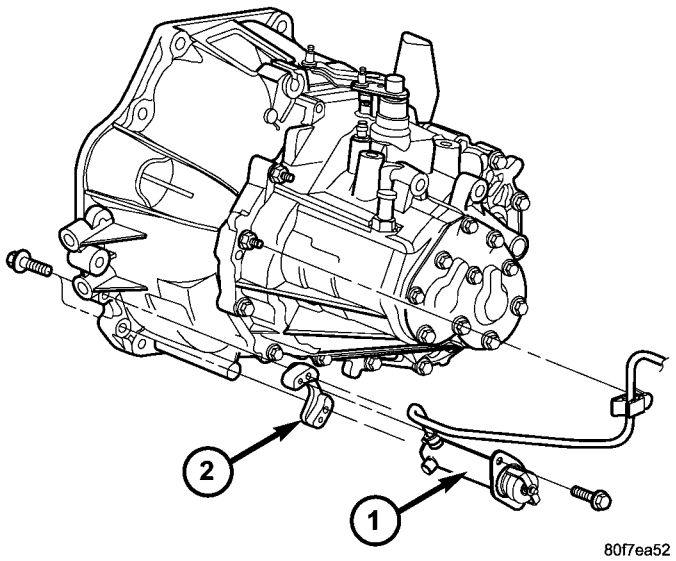

Fig. 4 Clutch Slave Cylinder at Transaxle- 2.0/2.4L

1 - SLAVE CYLINDER
2 - BRACKET

DIESEL AND TURBO MODELS

NOTE: Due to the angle and design of the Diesel and Turbo hydraulic system components, gravity and pedal bleeding are less effective and less efficient than the reverse fluid injection method (reverse bleeding). Reverse bleeding is recommended for this system, and requires the use of commercially available injection bleeding equipment.

RECOMMENDED PROCEDURE (REVERSE BLEEDING)

(1) Remove reservoir cap and inspect fluid level. Top off with DOT 3 Brake Fluid. Actuate clutch pedal briskly at least 50 times. Verify release system function. Repeat. If release system is still inoperative, continue with procedure.

(2) Remove reservoir from bracket and empty into collection container.

(3) Raise vehicle on hoist.

(4) Remove clutch bellhousing access cap to expose system bleed screw (Fig. 5).

CAUTION: Use care not to allow fluid to drain into clutch bellhousing. Excessive fluid will be agitated and sprayed around inside the clutch bellhousing by the rotating flywheel, contaminating the flywheel, disc, and pressure plate, resulting in poor clutch engagement.

(5) Using suitable socket/wrench, loosen bleed screw (Fig. 6).

CLUTCH (Continued)

(6) Quickly attach hand operated bleed apparatus to bleed screw. Use care not to over-fill reservoir and spill fluid into engine compartment.

(7) Operate bleed gun sufficiently to expel air upward through circuit and out of master cylinder reservoir. Fill and empty reservoir three (3) times.

(8) Remove bleed apparatus and tighten bleed screw to 7 N·m (62 in. lbs.). **Do not over-tighten.**

(9) Lower vehicle.

(10) Top of reservoir and return cap.

(11) Verify system operation. Actuate clutch pedal 50 times. If necessary, repeat procedure until road test confirms that shift issues no longer exist.

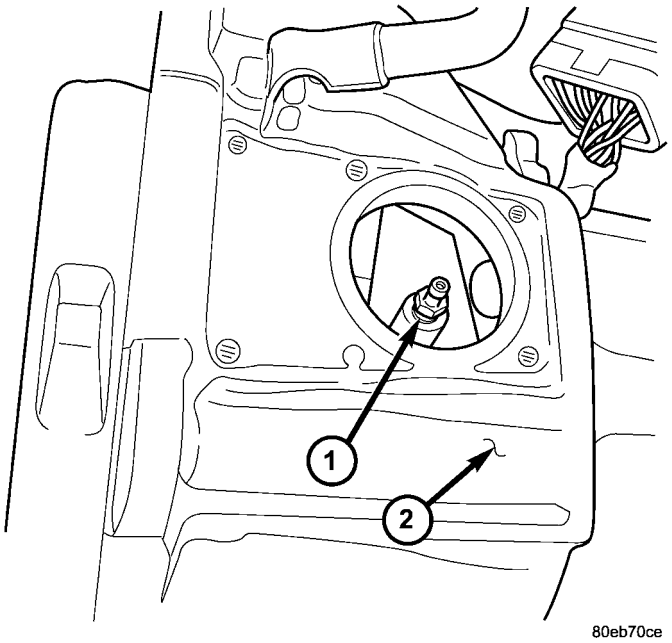

Fig. 5 Bleed Screw Location

1 - BLEEDER SCREW
2 - TRANSAXLE BELLHOUSING (FRONT)

ALTERNATE PROCEDURE (PEDAL BLEEDING)

(1) Remove reservoir cap and inspect fluid level. Top off with DOT 3 Brake Fluid. Actuate clutch pedal briskly at least 50 times. Verify release system function. Repeat. If release system is still inoperative, continue with procedure.

(2) Raise vehicle on hoist.

(3) Remove clutch bellhousing access cap to expose system bleed screw (Fig. 5).

CAUTION: Use care not to allow fluid to drain into clutch bellhousing. Excessive fluid will be agitated and sprayed around inside the clutch bellhousing by the rotating flywheel, contaminating the flywheel, disc, and pressure plate, resulting in poor clutch engagement.

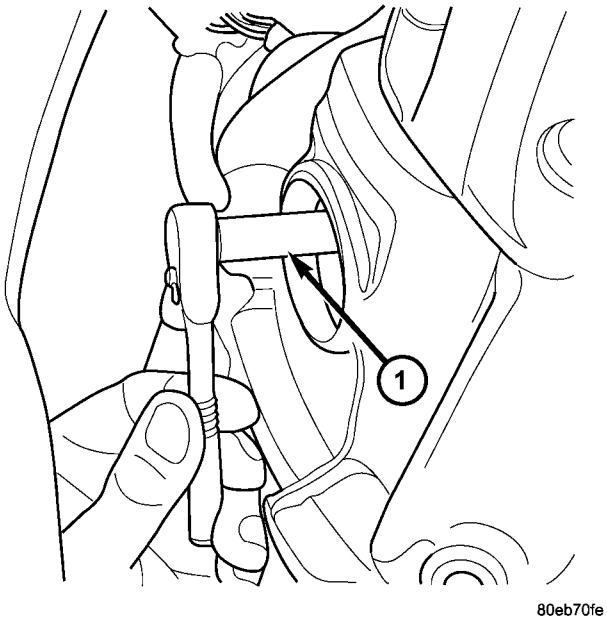

Fig. 6 Loosen/Tighten Bleed Screw

1 - SUITABLE SOCKET

(4) Using suitable socket/wrench, loosen bleed screw (Fig. 6). **Immediately install rubber hose to bleed screw to prevent fluid from entering clutch bellhousing.** Tighten bleed screw gently with suitable wrench.

(5) Lower vehicle.

(6) Have helper actuate clutch pedal to floor.

(7) Place collection container at end of hose to capture expelled fluid.

(8) Using suitable wrench, break bleeder screw loose and tighten to 7 N·m (62 in. lbs.). **Do not over-tighten.**

(9) Have helper release pedal, returning it to at-rest position, and then actuate pedal to floor.

(10) Break bleeder screw loose and tighten to 7 N·m (62 in. lbs.). **Do not over-tighten.**

(11) Repeat procedure as necessary, **keeping master cylinder reservoir full during the process**, until air bubbles are no longer visible in collection container.

(12) When air bubbles are no longer visible, actuate clutch pedal briskly at least 50 times. Verify release system function and top off fluid as necessary.

CLUTCH (Continued)

SPECIFICATIONS

CLUTCH/HYDRAULICS/PEDALS

TORQUE SPECIFICATIONS

DESCRIPTION	N·m	Ft. Lbs.	In. Lbs.
Brake/Clutch Pedal & Booster-to-Dash Nuts	34	—	300
Brake/Clutch Pedal Assembly-to-Instrument Panel	34	—	300
Clutch Cover-to-Flywheel Bolts	29	—	250
Clutch Pedal Pivot Shaft Nut	42	31	—
Damper-to-Transaxle Nuts	24	—	215
Driveplate-to-Crankshaft Bolts	95	70	—
Flywheel-to-Crankshaft Bolts	95	70	—
Master Cylinder Pushrod Adj. Screw (LHD Models)	6	—	55
Modular Clutch-to-Drive Plate Bolts	88	65	—
Master Cylinder Mounting Nuts (LHD)	15	—	130
Master Cylinder Reservoir Mounting bolts (LHD)	11	—	115
Master Cylinder Reservior Mounting Screw (RHD)	3	—	24
Slave Cylinder-to-Transaxle (2.0/2.4L Models)	12	—	105
Slave Cylinder-to-Transaxle (2.0/2.4L Models)	19	—	168
Transaxle-to-Engine Mounting Bolts	95	70	—

CLUTCH DISC AND PRESSURE PLATE

REMOVAL

REMOVAL—1.6L

(1) Remove transaxle. (Refer to 21 - TRANSMISSION/TRANSAXLE/MANUAL - REMOVAL)

(2) Mark position of pressure plate on flywheel with paint or a scriber for assembly reference.

(3) Loosen and remove six (6) pressure plate-to-flywheel bolts. Remove pressure plate and clutch disc (Fig. 7).

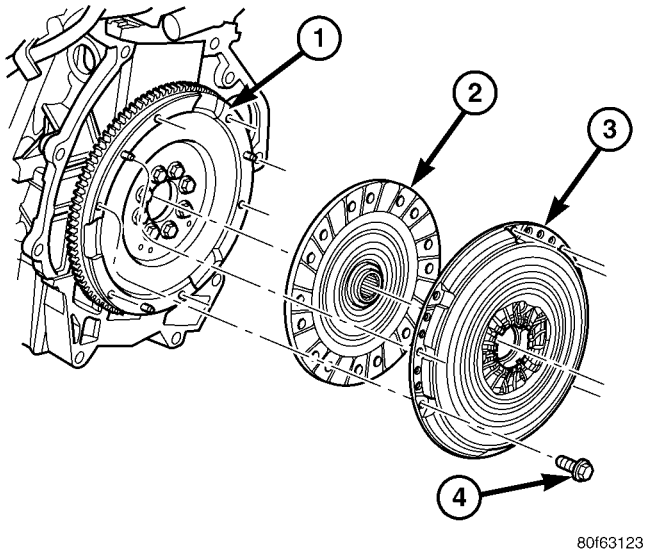

Fig. 7 Clutch Disc and Pressure Plate

1 - FLYWHEEL
2 - CLUTCH DISC
3 - PRESSURE PLATE
4 - BOLT (6)

(4) Remove eight (8) flywheel-to-crankshaft bolts and remove flywheel (Fig. 8).

(5) Inspect release lever and bearing (Fig. 9). Replace as necessary. (Refer to 6 - CLUTCH/CLUTCH RELEASE BEARING - REMOVAL)

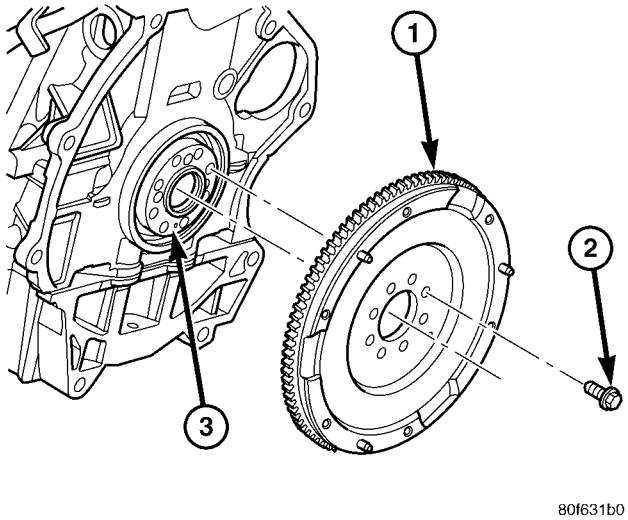

Fig. 8 Flywheel-to-Crankshaft

1 - FLYWHEEL
2 - BOLT (8)
3 - CRANKSHAFT FLANGE

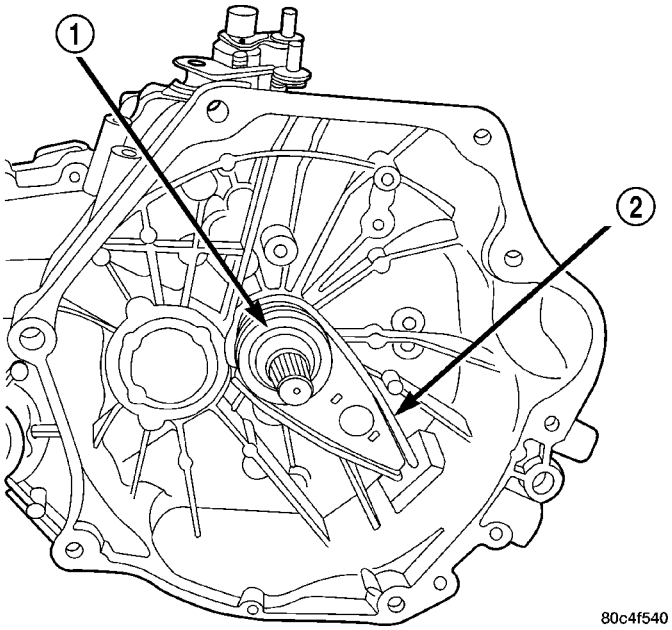

Fig. 9 Release Bearing and Lever

1 - RELEASE BEARING
2 - LEVER

CLUTCH DISC AND PRESSURE PLATE (Continued)

REMOVAL—2.2L TD

(1) Remove transaxle assembly. (Refer to 21 - TRANSMISSION/TRANSAXLE/MANUAL - REMOVAL)

(2) Mark position of pressure plate on flywheel with paint or a scriber for assembly reference.

(3) Loosen and remove six (6) pressure plate-to-flywheel bolts. Remove pressure plate and clutch disc (Fig. 10).

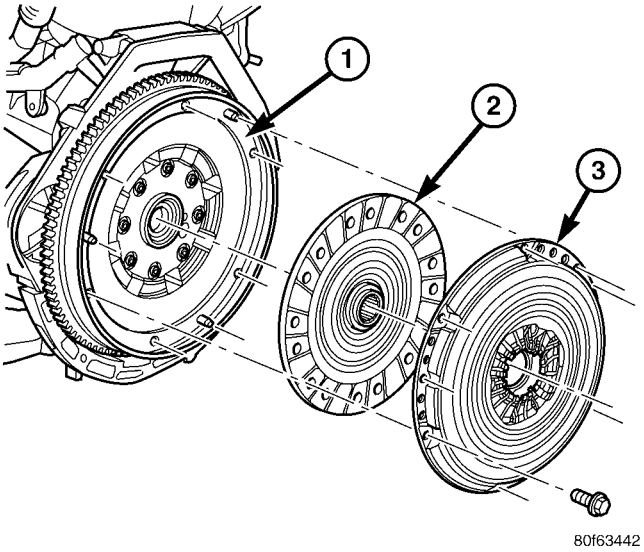

Fig. 10 Clutch Disc and Pressure Plate

1 - FLYWHEEL (DUAL-MASS)
2 - CLUTCH DISC
3 - PRESSURE PLATE

(4) Remove eight (8) flywheel-to-crankshaft bolts and remove flywheel assembly (Fig. 11).

INSTALLATION

INSTALLATION—1.6L

(1) Inspect clutch release bearing and lever for excessive wear and replace as necessary (Fig. 9).

(2) Clean the surfaces of the flywheel and pressure plate to make certain that all oil, grease, and rust have been removed.

(3) Verify the crankshaft mounting flange is free of debris, oil, grease, etc. Position the flywheel onto the engine crankshaft (Fig. 8).

(4) Install and torque the flywheel-to-crankshaft bolts to 95 N·m (70 ft.lbs.).

(5) Apply a very light coating of grease to the splines in the clutch disc hub.

(6) Position the clutch disc to the flywheel. Make sure the side marked “FLYWHEEL SIDE” faces the flywheel.

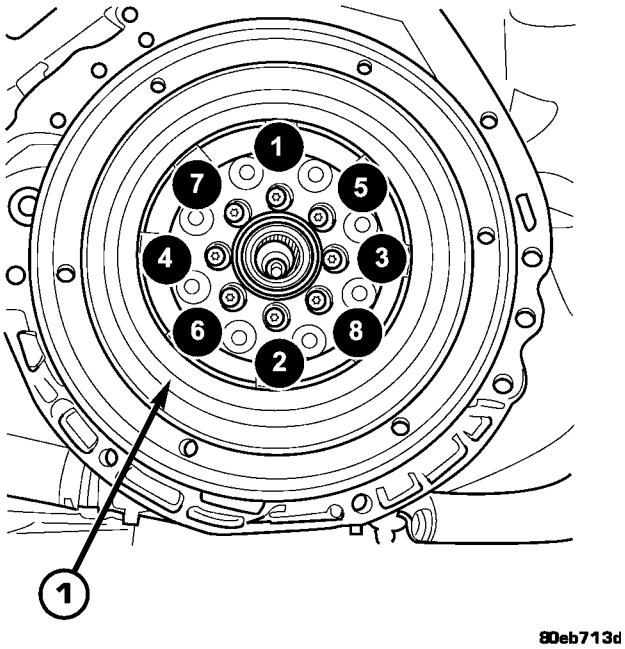

Fig. 11 Flywheel-to-Crankshaft Bolt Pattern

1 - FLYWHEEL ASSEMBLY

(7) Install the clutch pressure plate to the flywheel and clutch disc (Fig. 7). Finger tighten the six (6) pressure plate-to-flywheel bolts.

(8) Use Clutch Alignment Tool 6724 to position the clutch disc to the center of the flywheel (Fig. 12).

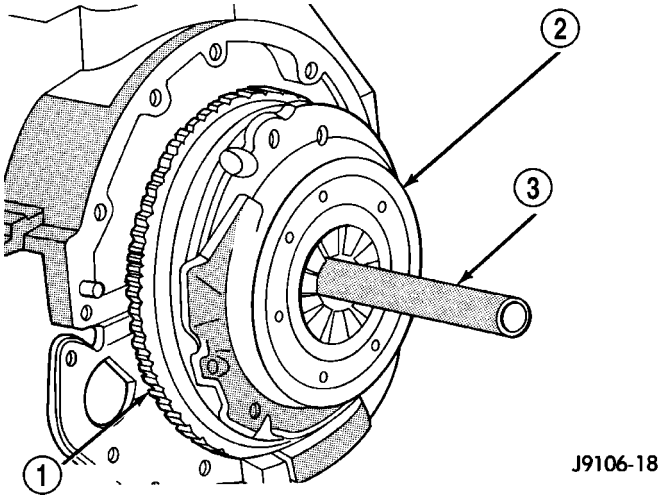

Fig. 12 Aligning Clutch Disc—Typical

1 - FLYWHEEL
2 - PRESSURE PLATE
3 - CLUTCH DISC ALIGNMENT TOOL

CLUTCH DISC AND PRESSURE PLATE (Continued)

(9) Tighten pressure plate bolts evenly and in rotation a few threads at a time **The bolts must be tightened evenly and to specified torque to avoid distorting the pressure plate.**.

(10) Using a “criss-cross” pattern, torque the pressure plate-to-flywheel bolts to 28 N·m (250 in.lbs.). Remove the clutch disc alignment tool.

(11) Apply light coat of Mopar® High Temperature Bearing Grease or equivalent to clutch disc hub and splines of transmission input shaft.

CAUTION: Do not over lubricate shaft splines. This will result in grease contamination of disc.

(12) Install transaxle. (Refer to 21 - TRANSMISSION/TRANSAXLE/MANUAL - INSTALLATION)

INSTALLATION—2.2L TD

(1) Inspect clutch release bearing and lever for excessive wear and replace as necessary. The release bearing is integral to the Concentric Slave Cylinder (CSC).

(2) Clean the surfaces of the flywheel and pressure plate to make certain that all oil, grease, and rust have been removed.

(3) Verify the crankshaft mounting flange is free of debris, oil, grease, etc. Position the flywheel onto the engine crankshaft (Fig. 11).

(4) Install flywheel to crankshaft. Install eight (8) flywheel-to-crankshaft bolts and torque to 45 N·m (33 ft. lbs.) plus an additional ¼ turn (90°) (Fig. 11).

(5) Apply a very light coating of grease to the splines in the clutch disc hub.

(6) Position the clutch disc to the flywheel. Make sure the side marked “FLYWHEEL SIDE” faces the flywheel (Fig. 10)..

(7) Install the clutch pressure plate to the flywheel and clutch disc (Fig. 10). Finger tighten the six (6) pressure plate-to-flywheel bolts.

(8) Use Clutch Alignment Tool 6724 to position the clutch disc to the center of the flywheel (Fig. 13).

(9) Tighten pressure plate bolts evenly and in rotation a few threads at a time **The bolts must be tightened evenly and to specified torque to avoid distorting the pressure plate.**.

(10) Using a “criss-cross” pattern, torque pressure plate bolts to 31 N·m (23 ft. lbs.). Remove the clutch disc alignment tool.

(11) Apply light coat of Mopar® High Temperature Bearing Grease or equivalent to clutch disc hub and splines of transmission input shaft.

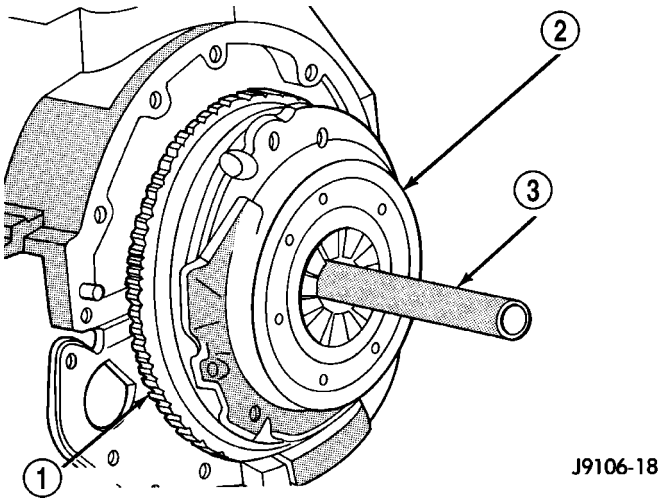

Fig. 13 Aligning Clutch Disc—Typical

1 - FLYWHEEL
2 - PRESSURE PLATE
3 - CLUTCH DISC ALIGNMENT TOOL

CAUTION: Do not over lubricate shaft splines. This will result in grease contamination of disc.

(12) Install transaxle. (Refer to 21 - TRANSMISSION/TRANSAXLE/MANUAL - INSTALLATION)

CLUTCH INTERLOCK/UPSTOP SWITCH

DESCRIPTION

The clutch interlock/upstop switch is an assembly consisting of two switches: an engine starter inhibit switch (interlock) and a clutch pedal upstop switch (Fig. 14). The switch assembly is located in the clutch/brake pedal bracket assembly (Fig. 15), each switch being fastened by four plastic wing tabs.

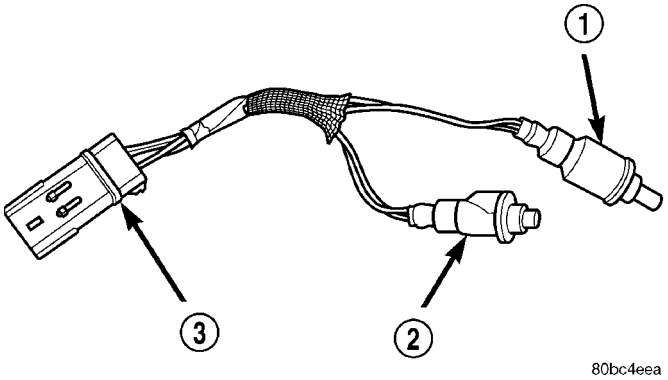

Fig. 14 Clutch Interlock/Upstop Switch

1 - UPSTOP SWITCH (IF EQUIPPED)
2 - INTERLOCK SWITCH
3 - CONNECTOR

CLUTCH INTERLOCK/UPSTOP SWITCH (Continued)

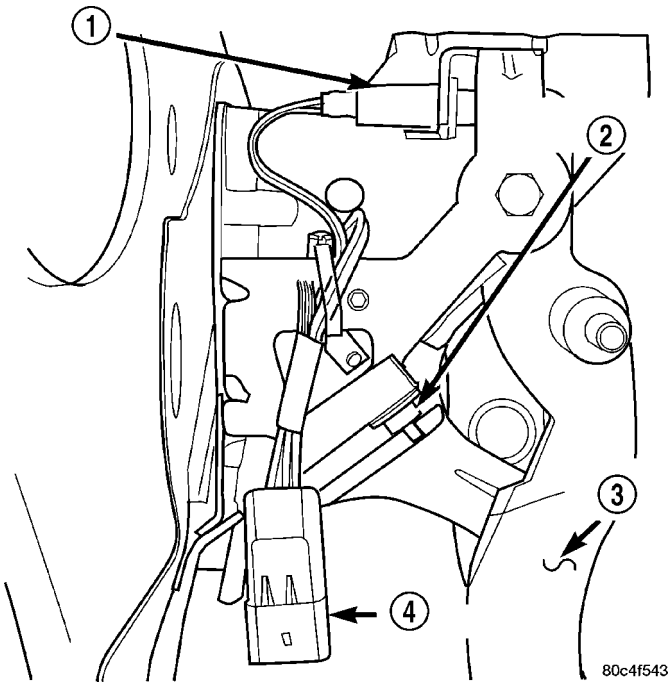

Fig. 15 Clutch/Brake Pedal Bracket

1 - UPSTOP SWITCH (IF EQUIPPED)
2 - INTERLOCK SWITCH
3 - CLUTCH PEDAL
4 - CONNECTOR

OPERATION

CLUTCH INTERLOCK SWITCH

The clutch interlock switch prevents engine starter operation and inadvertent vehicle movement with the clutch pedal in the up position (not depressed), or under normal conditions with the clutch engaged and the transaxle in gear.

WARNING: WHEN THERE IS A LOSS OF CLUTCH SYSTEM HYDRAULIC FLUID, OR THE CLUTCH MASTER CYLINDER PUSHROD IS DISCONNECTED FROM THE PEDAL LEVER, THE ENGINE MAY START WITH THE CLUTCH ENGAGED, CAUSING UNDESIRABLE VEHICLE MOVEMENT IF THE TRANSAXLE IS IN ANY GEAR.

The switch is open while the clutch pedal is at rest (up position). When the clutch pedal is fully depressed, the pedal lever (LHD), or the master cylinder push rod (RHD), closes the switch, completing the signal circuit from the PCM and closing the ground path, allowing engine starter operation. The interlock switch is not adjustable.

CLUTCH PEDAL UPSTOP SWITCH

NOTE: 2.0/2.4L-equipped models do not use the clutch pedal upstop switch/feature. These vehicles only utilize the starter inhibit (interlock) feature.

1.6L and 2.2L Turbo Diesel models: With the clutch pedal at rest, the clutch pedal upstop switch is closed, allowing speed control operation. When the clutch pedal is depressed, the upstop switch opens and signals the PCM to cancel speed control operation, and enter a modified engine calibration schedule to improve driveability during gear-to-gear shifts. The upstop switch is not adjustable.

DIAGNOSIS AND TESTING—CLUTCH INTERLOCK/UPSTOP SWITCH

LHD

NOTE: 2.0/2.4L-equipped models do not use the clutch pedal upstop switch/feature. These vehicles will only utilize the starter inhibit (interlock) feature.

The clutch interlock/upstop switch is an assembly consisting of two switches: an engine starter inhibit switch (interlock) and a clutch pedal upstop switch (Fig. 16). The switch assembly is located in the clutch/brake pedal bracket assembly (Fig. 17), each switch being fastened by four plastic wing tabs. The connector is secured to the pedal/bracket assembly by a plastic retainer.

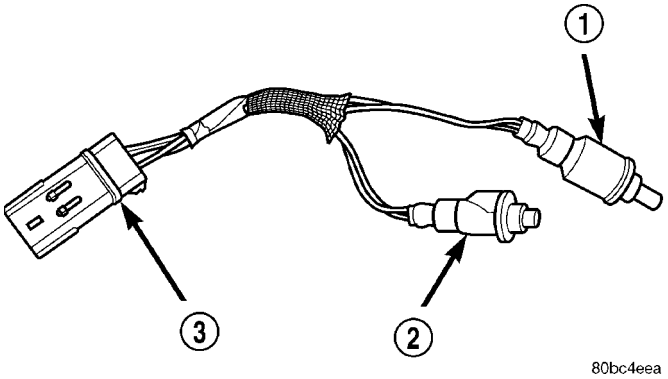

Fig. 16 Clutch Interlock/Upstop Switch

1 - UPSTOP SWITCH (IF EQUIPPED)
2 - INTERLOCK SWITCH
3 - CONNECTOR

RHD

The RHD clutch interlock/upstop switch (Fig. 18) consists of a single, multi-function switch that is activated by the hydraulic clutch master cylinder push rod.

CLUTCH INTERLOCK/UPSTOP SWITCH (Continued)

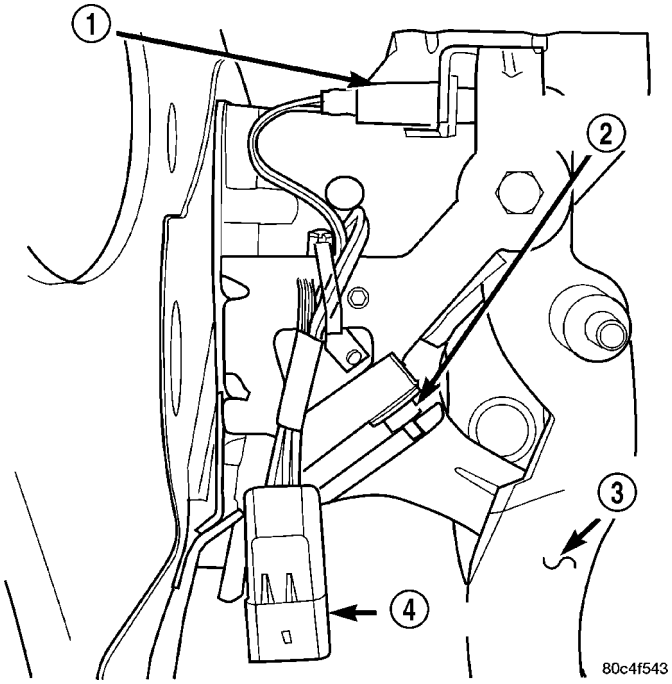

Fig. 17 Clutch/Brake Pedal Bracket

1 - UPSTOP SWITCH (IF EQUIPPED)
2 - INTERLOCK SWITCH
3 - CLUTCH PEDAL
4 - CONNECTOR

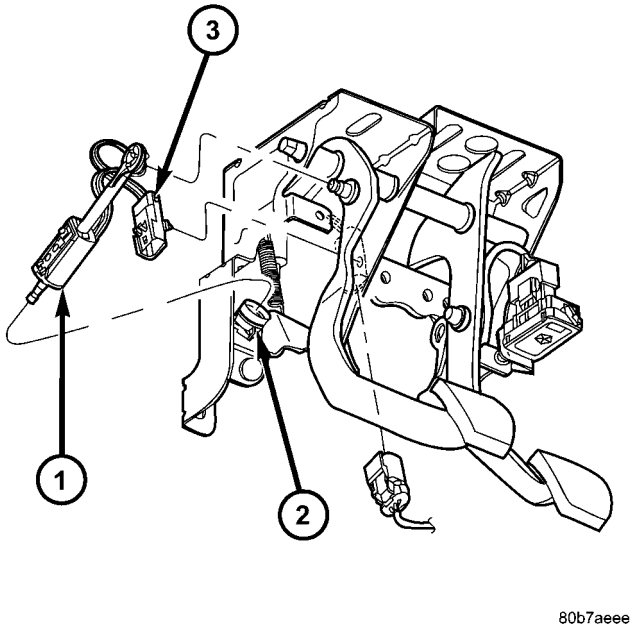

Fig. 18 Clutch Interlock/Upstop Switch

1 - INTERLOCK/UPSTOP SWITCH
2 - MASTER CYLINDER
3 - CONNECTOR

CLUTCH INTERLOCK SWITCH

Mechanical Test

(1) With the park brake set and the transaxle **IN NEUTRAL,** turn the ignition key to the start position. The engine starter should not crank with the clutch pedal at rest (not depressed). If the starter cranks, proceed to the electrical test to determine whether the switch is defective or the circuit is shorted. If the vehicle does not crank, proceed to the next step.

(2) With the park brake set and the transaxle **IN NEUTRAL,** fully depress the clutch pedal and turn the ignition key to the start position. The engine starter should crank. If the starter does not crank, visually inspect the clutch pedal for obstructions (floor mat, etc.) and for proper installation of the master cylinder push rod/bushing on the pedal pin. Also make sure the clutch pedal lever contacts and fully closes the switch for LHD applications.

Electrical Test

(1) Move ignition key to the “OFF/LOCK” position and remove key.

(2) Set park brake.

(3) Disconnect the clutch interlock/upstop switch connector.

(4) Using an ohmmeter, check for continuity between terminals 2 & 3 (Fig. 19) with the interlock switch not depressed (clutch pedal at rest). There should be no continuity between the terminals (open circuit).

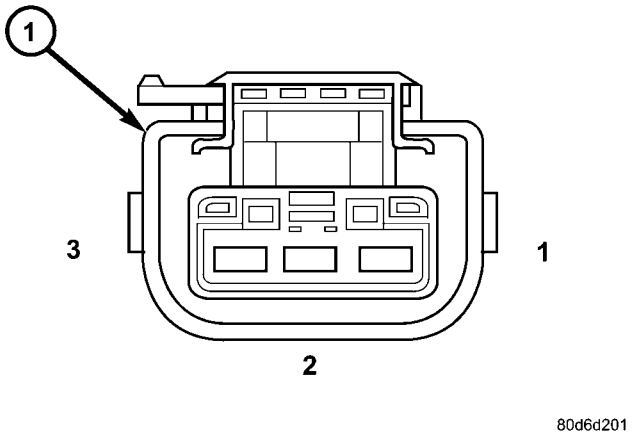

Fig. 19 Interlock/Upstop Switch Connector

1 - INTERLOCK/UPSTOP SWITCH CONNECTOR

(5) Fully depress the clutch pedal to close the switch. The switch button should compress at least 1.25 mm (0.050 in.) for LHD applications. The ohmmeter should show continuity (0 ohms).

CLUTCH INTERLOCK/UPSTOP SWITCH (Continued)

(6) For RHD applications, disconnect the push rod from the pedal pin and actuate the push rod by hand to close the switch. The ohmmeter should show continuity (0 ohms).

(7) If ohmmeter readings do not fall within these ranges, the switch assembly, or the pedal bracket assembly, is defective and should be replaced. If the switch tests ok, wiring is defective.

UPSTOP SWITCH

NOTE: 2.0/2.4L-equipped models do not use the clutch pedal upstop switch/feature. These vehicles will only utilize the starter inhibit (interlock) feature. PCM software will not recognize the upstop switch on 2.0/2.4L vehicles that have the switch, so upstop switch testing is not required. Proceed to Speed Control Diagnosis & Testing. (Refer to 8 - ELECTRICAL/SPEED CONTROL - DIAGNOSIS AND TESTING)

Mechanical Test (1.6L and 2.2L Turbo Diesel Models)

(1) Raise vehicle on hoist.

(2) Start engine and operate speed control to maintain speed.

(3) Depress clutch pedal at least 33 mm (1.30 in.). Speed control operation should terminate. If speed control does not terminate, the upstop switch is defective or the related wiring is shorted. Proceed to the upstop switch electrical test.

Electrical Test (1.6L and 2.2L Turbo Diesel Models)

(1) Move ignition key to the “OFF/LOCK” position and remove key.

(2) Set park brake.

(3) Disconnect the clutch interlock/upstop switch connector.

(4) Using an ohmmeter, check for continuity between terminals 1 & 2 (Fig. 19) with the upstop switch depressed (clutch pedal at rest). The ohmmeter should show continuity (0 ohms).

(5) Depress the clutch pedal at least 33 mm (1.30 in.) check for continuity between terminals 1 & 2. There should be no continuity between the terminals (open circuit).

(6) If ohmmeter readings do not fall within these ranges, the switch assembly is defective and should be replaced. If the switch tests ok, wiring is defective. Refer to Group 8W, Wiring Diagrams and repair defective wiring.

SERVICE DIAGNOSIS - CLUTCH INTERLOCK/UPSTOP SWITCH

CONDITION	POSSIBLE CAUSES	CORRECTION
ENGINE STARTER WON’T CRANK WHEN CLUTCH PEDAL IS PRESSED TO THE FLOOR	LHD - Clutch interlock switch does not have continuity when plunger is depressed 1.25 mm (1.30 in.).	Defective switch or open wiring circuit. Replace switch if necessary.
	RHD - Clutch interlock switch does not have continuity when plunger is fully depressed when removed from the pedal pin.	Defective pedal bracket assembly.
	Interlock switch plunger is not depressed when clutch pedal is pushed to the floor	Floor mat interferes with clutch pedal movement, clutch pedal bracket is bent, or the push rod/bushing is not properly installed.
	Problem is related to other components in the starting circuit.	Check other components in the starting circuit. Refer to Battery/Starting/Charging System in Group 8.
SPEED CONTROL DOES NOT TERMINATE WHEN CLUTCH PEDAL IS DEPRESSED	1.6L/2.2L TD Models: Upstop switch circuit is closed when clutch pedal is depressed, or harness is shorted.	Refer to Upstop Switch Electrical Test in this group. Repair wiring or replace switch assembly as necessary.
	2.0/2.4L Models: Speed control system failure.	Refer to Group 8P, Speed Control for further diagnosis and testing procedures.

CLUTCH INTERLOCK/UPSTOP SWITCH (Continued)

REMOVAL

REMOVAL - LHD

NOTE: Depending on vehicle build date, some vehicles will not have the clutch pedal upstop switch included in the switch assembly. These vehicles will only utilize the starter inhibit (interlock) feature.

(1) Disconnect and isolate battery negative cable.

(2) Remove left lower instrument panel bezel (Fig. 20).

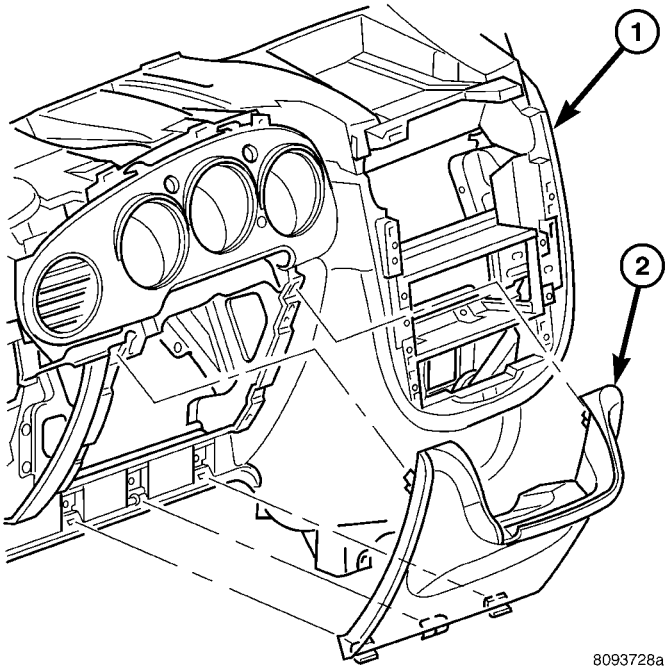

Fig. 20 Left Lower Instrument Panel Bezel

1 - INSTRUMENT PANEL
2 - INSTRUMENT PANEL STEERING COLUMN COVER

(3) Disconnect interlock switch and brake lamp switch connectors.

(4) Disconnect clutch master cylinder rod from clutch pedal pin. **Inspect plastic retainer upon removal. If retainer is damaged, it MUST be replaced.**

(5) Remove brake booster push rod retaining clip from brake pedal. Disengage rod from pedal (Fig. 21).

(6) Remove two pedal assembly bracket to instrument panel nuts (Fig. 22).

(7) Remove four brake booster/pedal bracket-to-dash panel nuts (Fig. 22).

(8) From under the hood, pull brake master cylinder/booster far enough forward to obtain pedal to bracket stud clearance.

(9) Remove the pedal bracket assembly (Fig. 22).

(10) Remove pedal pivot shaft and remove brake and clutch pedals.

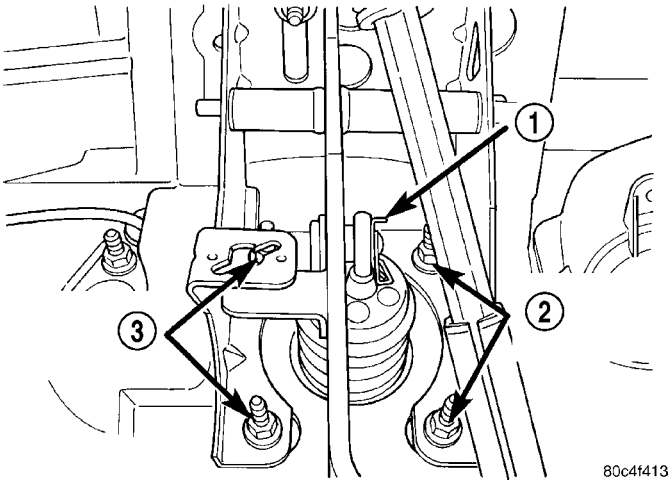

Fig. 21 Brake Booster Mounting Nuts and Rod Retaining Clip

1 - CLIP
2 - BOOSTER MOUNTING NUTS
3 - BOOSTER MOUNTING NUTS

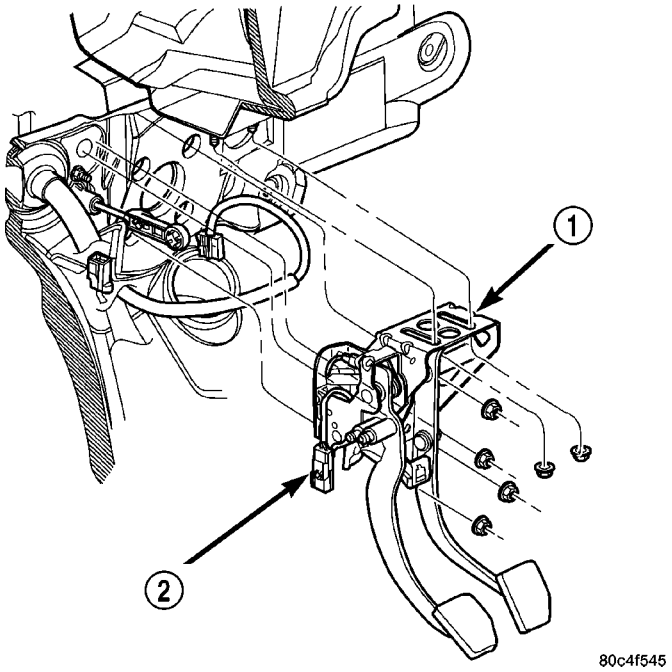

Fig. 22 Brake/Clutch Pedal Assembly Removal/ Installation

1 - CLUTCH/BRAKE PEDAL ASSEMBLY
2 - INTERLOCK/UPSTOP SWITCH CONNECTOR

CLUTCH INTERLOCK/UPSTOP SWITCH (Continued)

(11) Remove the interlock/upstop switch assembly (Fig. 23) from the brake/clutch pedal bracket assembly by depressing the four plastic wing tabs on each switch.

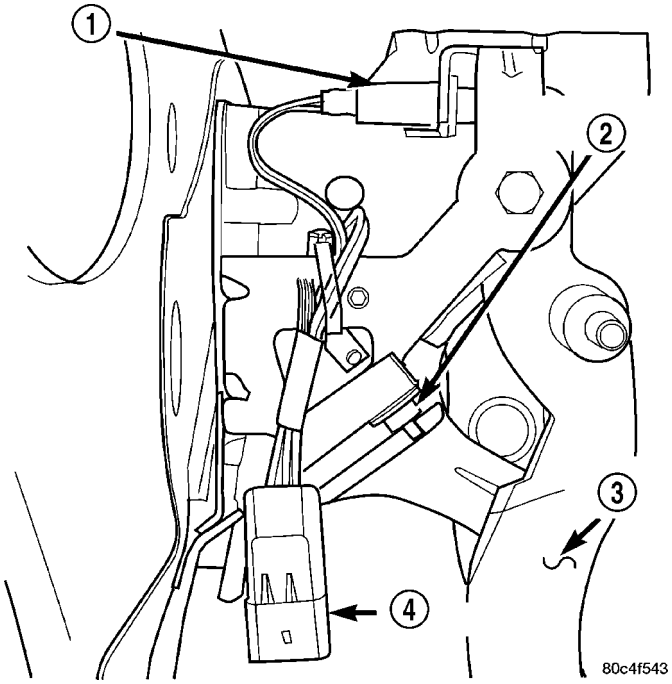

Fig. 23 Interlock/Upstop Switch

1 - UPSTOP SWITCH (IF EQUIPPED)
2 - INTERLOCK SWITCH
3 - CLUTCH PEDAL
4 - CONNECTOR

REMOVAL - RHD

(1) Remove lower instrument panel bezel (Fig. 24).

(2) Disconnect the master cylinder push rod from the pedal pin (Fig. 25). **Inspect push rod retainer for damage. If it is damaged (broken/cracked), it must be replaced.**

(3) Squeeze together the tangs on the switch cover plate and slide the plate off the switch housing.

(4) Disconnect the clutch interlock/upstop switch connector from the instrument panel wiring harness.

(5) Remove the switch from the vehicle.

INSTALLATION

INSTALLATION - LHD

NOTE: Proper switch harness routing is critical to switch durability. Note the harness routing and location of fasteners intended to keep wires from contacting pedals.

(1) Install switches into the pedal bracket assembly as shown in (Fig. 23). Route harness as was prior to removal.

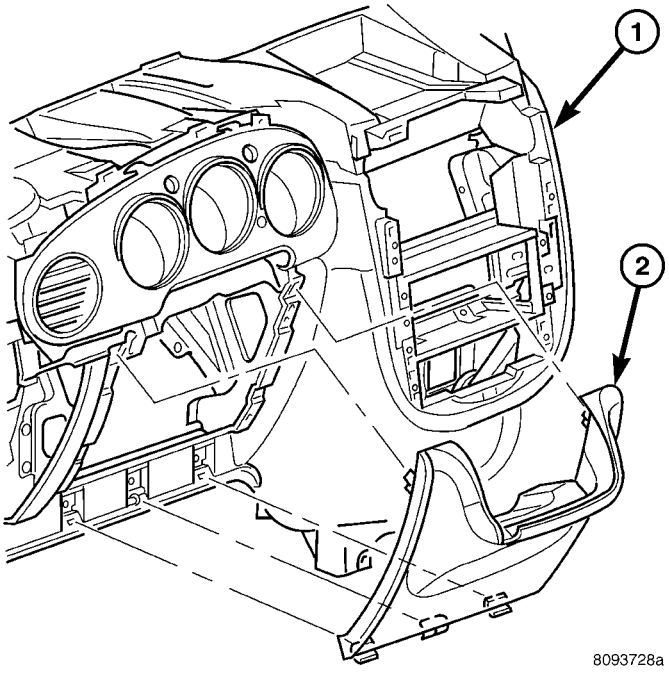

Fig. 24 Lower Instrument Panel Bezel—Typical

1 - INSTRUMENT PANEL
2 - INSTRUMENT PANEL STEERING COLUMN COVER

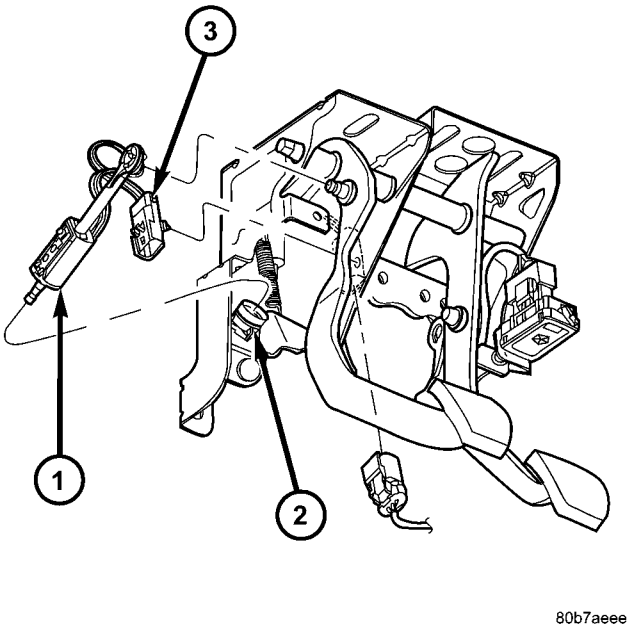

Fig. 25 Clutch Interlock/Upstop Switch

1 - INTERLOCK/UPSTOP SWITCH
2 - MASTER CYLINDER
3 - CONNECTOR

(2) Install clutch and brake pedals to pedal bracket, and install pivot shaft and nut. Torque pivot shaft nut to 42 N·m (31 ft. lbs.).

CLUTCH INTERLOCK/UPSTOP SWITCH (Continued)

(3) Install brake/clutch pedal bracket assembly into position. Install and tighten brake booster mounting nuts to 34 N·m (300 in. lbs.). Install and tighten pedal bracket-to-instrument panel nuts to 34 N·m (300 in. lbs.).

(4) Install new stop lamp switch. Refer to Stop Lamp Switch Removal and Installation.

(5) Connect brake booster rod to brake pedal. Install retainer clip (Fig. 21).

(6) Loosen adjustment screw on clutch master cylinder pushrod (Fig. 26). **Gently** lift clutch pedal upwards. **Raising pedal with excessive force can damage to the pedal upstop, causing excessive pedal travel.**

NOTE: Inspect plastic retainer upon removal. If retainer is damaged in any way (broken/cracked), it MUST be replaced.

(7) Connect clutch master cylinder pushrod to pedal pin and torque adjustment screw to 6 N·m (55 in. lbs.).

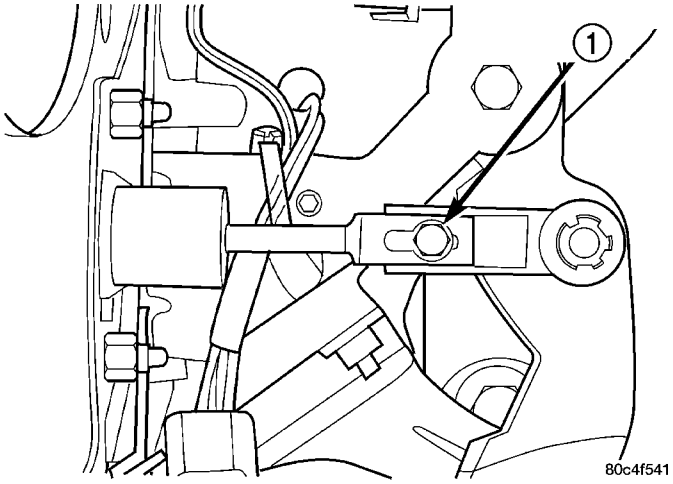

Fig. 26 Clutch Master Cylinder Pushrod Adjustment Screw

1 - ADJUSTMENT SCREW

(8) Connect interlock/upstop and stop lamp switch connectors.

(9) Install left lower instrument panel bezel (Fig. 20).

(10) Connect battery negative cable.

(11) Verify proper switch operation.

INSTALLATION - RHD

NOTE: Proper switch harness routing is critical to switch durability. Note the harness routing and location of fasteners intended to keep wires from contacting pedals.

(1) Install the clutch interlock/upstop switch onto the master cylinder push rod, making sure that the push rod is oriented with the push rod retainer toward the wiring of the switch. The master cylinder push rod must be snapped into the clutch interlock/upstop switch along the smaller diameter of the push rod between the snap ring and the transition to the larger diameter.

CAUTION: Improper assembly of the larger diameter of the push rod into the clutch interlock/upstop switch could cause damage to the switch or a clutch system failure.

(2) Install the switch cover plate.

CAUTION: Inspect the plastic push rod retainer for damage. If it is damaged (broken/cracked), it MUST be replaced.

(3) Connect clutch master cylinder pushrod to the clutch pedal pin.

(4) Route the wiring harness as it was prior to removal.

(5) Secure the switch connector retaining push pin into the appropriate hole in the pedal bracket assembly.

(6) Install lower instrument panel bezel (Fig. 24).

(7) Verify proper interlock/upstop switch operation.

CLUTCH RELEASE BEARING

DESCRIPTION

NOTE: Models equipped with the Diesel or Turbo Engine options utilize a release bearing which is integral to the Concentric Slave Cylinder (CSC). (Refer to 6 - CLUTCH/SLAVE CYLINDER - DESCRIPTION)

1.6/2.0/2.4L Models A conventional release bearing is used to engage and disengage the clutch pressure plate. The clutch release bearing is mounted on the transaxle front bearing retainer. The bearing is attached to and operated by the release lever (Fig. 27), which moves the bearing into contact with the clutch cover diaphragm spring.

CLUTCH RELEASE BEARING (Continued)

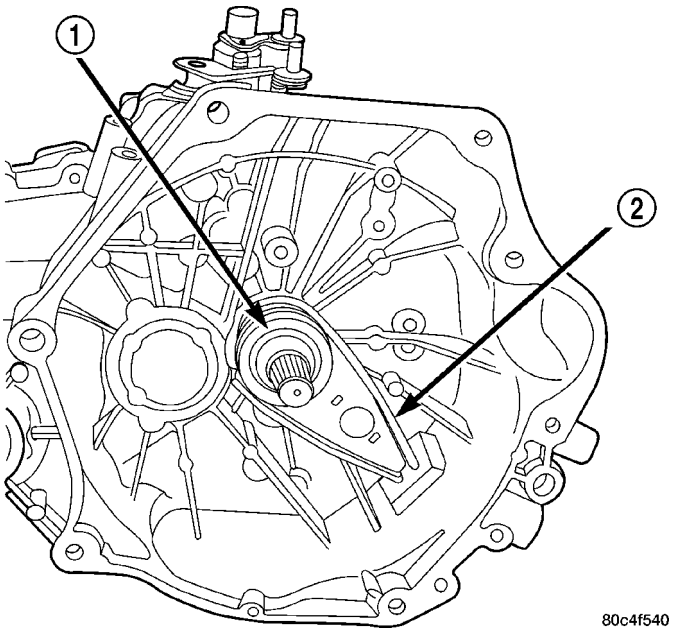

Fig. 27 Clutch Release Bearing and Lever

1 - RELEASE BEARING
2 - LEVER

OPERATION

The release bearing is operated by the release lever. Slave cylinder force causes the release lever to move the release bearing into contact with the diaphragm spring. As additional force is applied, the bearing presses the diaphragm spring fingers inward on the fulcrums. This action moves the pressure plate rearward, relieving clamping force on the clutch disc. Releasing pedal pressure removes clutch hydraulic pressure. The release bearing then moves away from the diaphragm spring which allows the pressure plate to exert clamping force on the clutch disc.

REMOVAL

NOTE: Models equipped with the Diesel and Turbo Engine option utilize a release bearing that is integral to the Concentric Slave Cylinder (CSC). (Refer to 6 - CLUTCH/SLAVE CYLINDER - REMOVAL)

(1) Remove the transaxle from the vehicle. (Refer to 21 - TRANSMISSION/TRANSAXLE/MANUAL - REMOVAL)

(2) Move the lever and bearing assembly (Fig. 28) to a vertical in-line position. Grasp the release lever with two hands in the pivot stud socket area. Pull with even pressure and the lever will pop off the pivot–stud. Do not use a screwdriver or pry bar to pop off the lever. This may damage the spring clip on the lever.

(3) As a unit, remove the lever from the bearing thrust plate. Be careful not to damage retention tabs on bearing.

(4) Examine the condition of the bearing. **It is pre-lubricated and sealed and should not be immersed in oil or solvent.**

(5) The bearing should turn smoothly when held in the hand under a light thrust load. A light drag caused by the lubricant fill is normal. If the bearing is noisy, rough, or dry, replace the complete bearing assembly with a new bearing.

(6) Check the condition of the pivot stud spring clips on back side of clutch release lever. If the clips are broken or distorted, replace the clutch release lever.

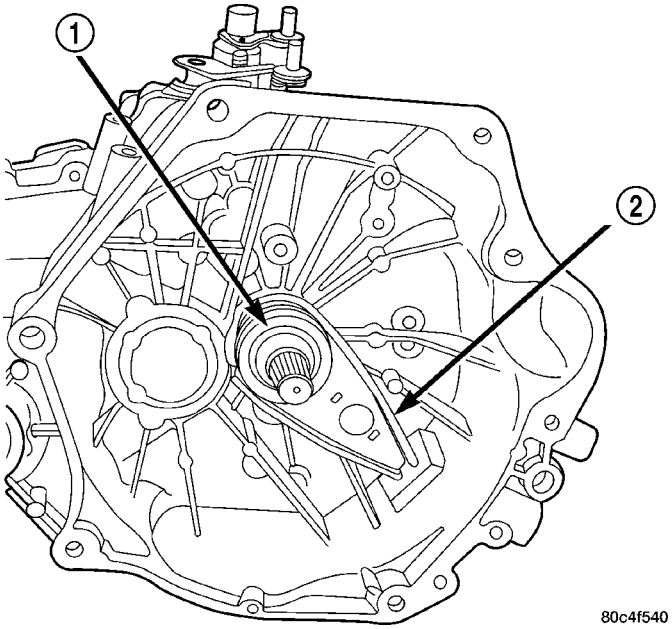

Fig. 28 Release Bearing and Lever

1 - RELEASE BEARING
2 - LEVER

INSTALLATION

(1) The pivot ball pocket in the lever, as well as the lever arms should be lubricated with grease prior to installation.

(2) Assemble the lever to the bearing (Fig. 28). The small pegs on the bearing must go over the lever arms.

(3) Slide the bearing and lever assembly onto the input shaft bearing retainer, as a unit.

(4) Snap the clutch release lever onto the pivot ball.

(5) Reinstall transaxle assembly. (Refer to 21 - TRANSMISSION/TRANSAXLE/MANUAL - INSTALLATION)

FLYWHEEL

DESCRIPTION

1.6L Equipped Models

1.6L Equipped Models utilize a conventional flywheel assembly, which is a solid rotating mass fastened to the rear of the crankshaft (Fig. 29). The flywheel also incorporates an integral starter ring gear.

2.2L Turbo Diesel Equipped Models

The Dual-Mass Flywheel (DMF) is utilized on 2.2L TD/5-speed models. Models equipped with the turbocharged 2.4L Engine option also utilize a Dual-Mass Flywheel, but it is a serviceable part of the Modular Clutch Assembly. (Refer to 6 - CLUTCH/MODULAR CLUTCH - DESCRIPTION). The DMF consists of two decoupled masses (primary and secondary mass) which are connected via a spring/damping system (Fig. 30). The primary flywheel side is bolted to the crankshaft. The secondary flywheel face serves as the driving member to the clutch disc. Internal springs between the flywheels are used to couple the masses while dampening energy. The flywheel also incorporates the ring gear around the outer circumference to mesh with the starter to permit engine cranking.

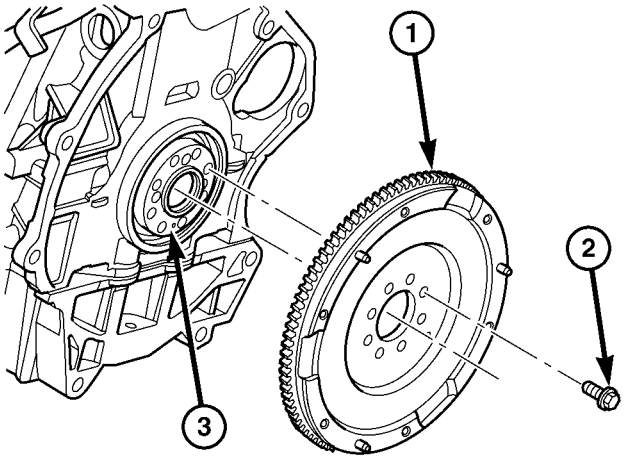

80f631b0

Fig. 29 Flywheel-to-Crankshaft

1 - FLYWHEEL
2 - BOLT (8)
3 - CRANKSHAFT FLANGE

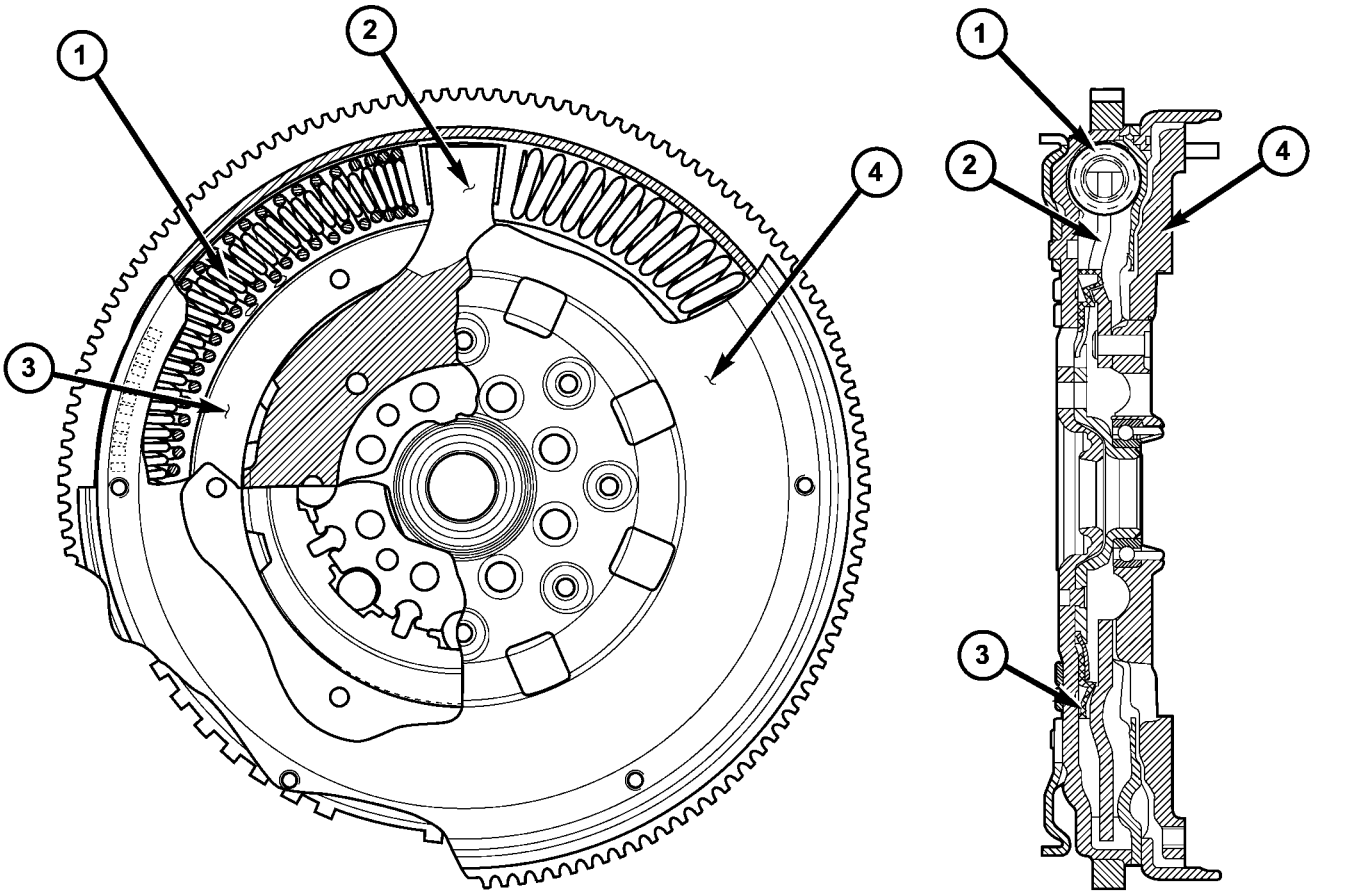

80eb7138

Fig. 30 Dual-Mass Flywheel (DMF)

1 - THRUST SPRING
2 - FLANGE/DIAPHRAGM SPRING
3 - PRIMARY MASS
4 - SECONDARY MASS

FLYWHEEL (Continued)

OPERATION

The flywheel serves to dampen the engine firing pulses. The heavy weight of the flywheel relative to the rotating mass of the engine components serves to stabilize the flow of power to the remainder of the drivetrain. The crankshaft has the tendency to attempt to speed up and slow down in response to the cylinder firing pulses. The flywheel dampens these impulses by absorbing energy when the crankshaft speeds and releasing the energy back into the system when the crankshaft slows down.

On a Dual Mass Flywheel, the additional secondary mass coupled to the transmission lowers the natural frequency of the transmission rotating elements. This decreases the transmission gear rattle. The damper springs between the two flywheel masses replace the clutch disc damper springs and assist in a smooth transfer of torque to the transmission.

CAUTION: The Dual Mass Flywheel is serviced as an assembly only and should never be disassembled.

REMOVAL

(1) Remove transaxle (Refer to 21 - TRANSMISSION/TRANSAXLE/MANUAL - REMOVAL).

(2) Remove clutch pressure plate and disc (Refer to 6 - CLUTCH/CLUTCH DISC - REMOVAL).

(3) Remove eight (8) flywheel-to-crankshaft bolts and remove flywheel assembly (Fig. 31) (Fig. 32).

INSTALLATION

(1) Clean the surfaces of the flywheel and pressure plate to make certain that all oil, grease, and rust have been removed.

(2) **2.2L Diesel Engine Equipped Models (Fig. 31):** Install flywheel to crankshaft. Install eight (8) flywheel-to-crankshaft bolts and torque to 45 N·m (33 ft. lbs.) plus an additional ¼ turn (90°).**1.6L Engine Equipped Models (Fig. 32):** Install and torque the flywheel-to-crankshaft bolts to 95 N·m (70 ft.lbs.).

(3) Install clutch pressure plate and disc (Refer to 6 - CLUTCH/CLUTCH DISC - INSTALLATION).

(4) Install transaxle assembly (Refer to 21 - TRANSMISSION/TRANSAXLE/MANUAL - INSTALLATION).

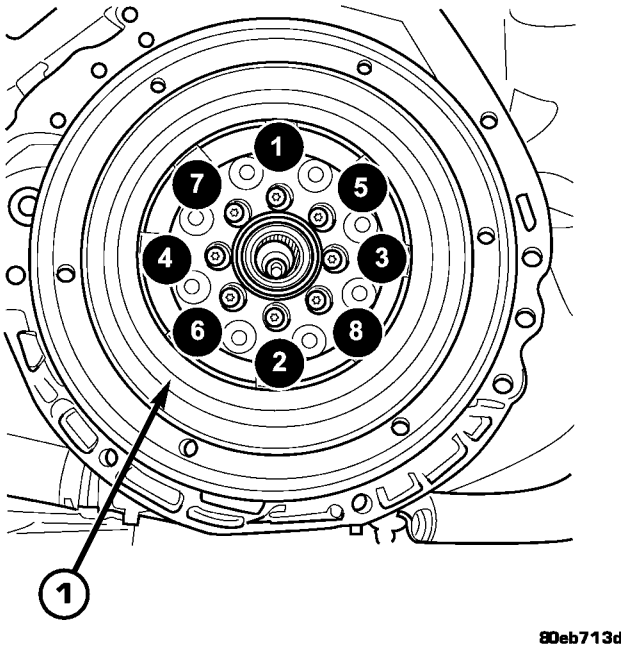

Fig. 31 Flywheel Bolt Pattern—2.2L Turbo Diesel Engine

1 - FLYWHEEL ASSEMBLY

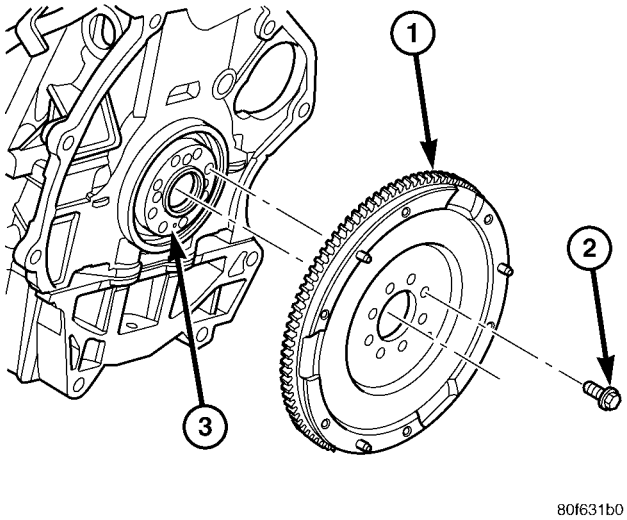

Fig. 32 Flywheel-to-Crankshaft—1.6L Engine

1 - FLYWHEEL
2 - BOLT (8)
3 - CRANKSHAFT FLANGE

MASTER CYLINDER - LHD

DESCRIPTION

CAUTION: The clutch master cylinder pushrod adjustment must not be used to change pedal free-play or pedal height. Using the adjustable pushrod for these reasons will result in premature clutch wear or system over/undertravel.

NOTE: Vehicles equipped with a 1.6/2.0/2.4L (Non-Turbo) engine have one-piece master cylinder assemblies. If the master cylinder requires replacement, the master AND slave cylinders must be replaced with a two-piece system.

The clutch master cylinder mounts to the dash panel (Fig. 33) and consists of a push rod (adjustable on LHD models), a piston and cylinder housing, an integral fluid reservoir, and an interconnecting hydraulic tube (Fig. 34). 1.6/2.0/2.4L (Non-Turbo)-equipped models have a master cylinder which incorporates a slave cylinder as well.

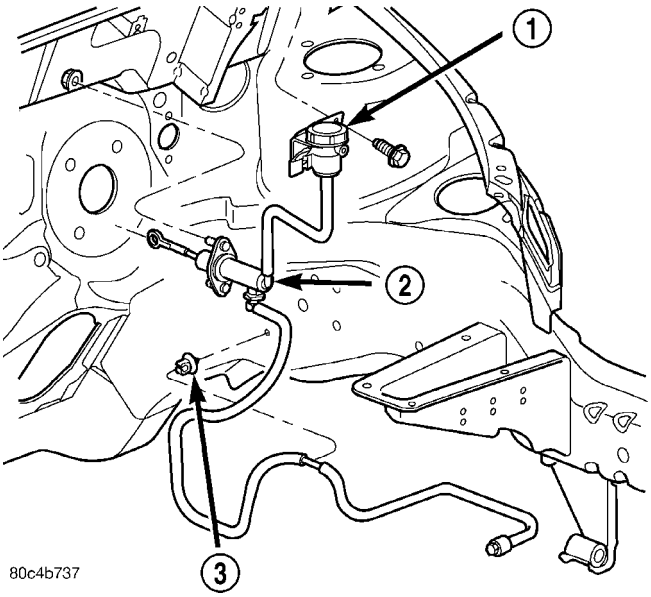

Fig. 33 Master Cylinder Mounting—LHD

1 - RESERVOIR
2 - MASTER CYLINDER
3 - RETAINER

OPERATION

The clutch master cylinder (Fig. 33) (Fig. 34) produces the hydraulic pressure necessary to disengage the clutch. When the clutch pedal is depressed, the push rod moves the piston to produce pressure in the cylinder. This pressure moves fluid through the system to the slave cylinder, which in turn operates the release lever and bearing, disengaging the clutch.

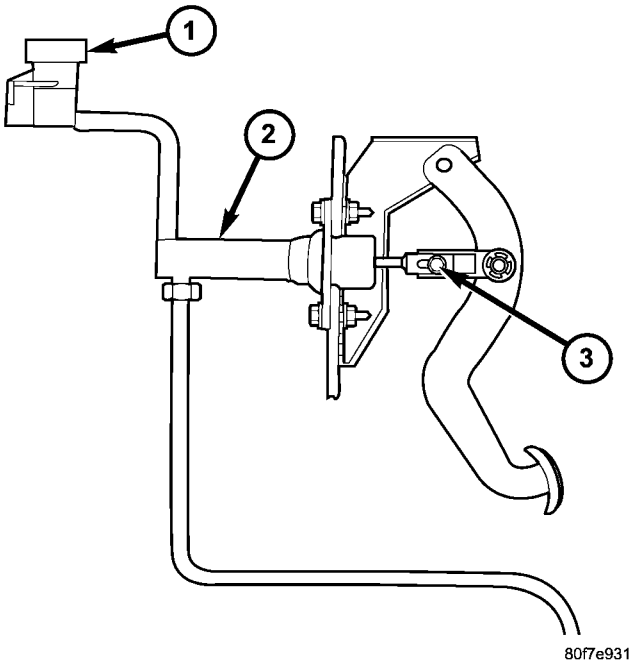

Fig. 34 Clutch Hydraulic System—LHD

1 - RESERVOIR
2 - MASTER CYLINDER
3 - ADJUSTMENT SCREW

When the clutch pedal is released, pressure is relieved and the return spring returns the piston to its original position until the next pedal actuation.

REMOVAL

NOTE: Vehicles equipped with a 1.6/2.0/2.4L (Non-Turbo) engine have one-piece master/slave cylinder assemblies. If the master cylinder requires replacement, the master AND slave cylinders must be replaced with a two-piece “quick-connect” system. If the slave cylinder requires replacement, the slave cylinder is serviced separately.

NOTE: Replacement master cylinder assemblies come pre-filled with fluid. No fluid service or system bleeding should be required, unless the hydraulic system has lost an excessive amount of fluid and has ingested air into the master or slave cylinder assembly.

MASTER CYLINDER - LHD (Continued)

(1) Remove air cleaner assembly (Fig. 35).

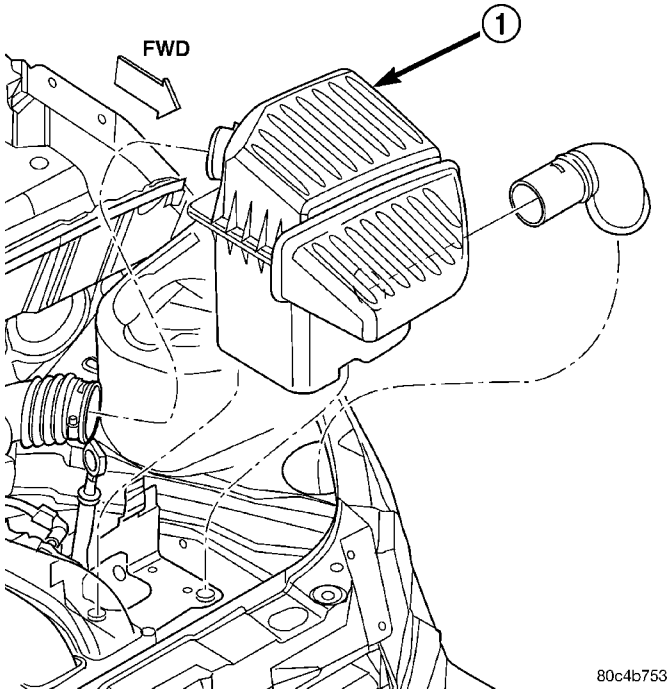

Fig. 35 Air Cleaner Assembly Removal/Installation—Typical

1 - AIR CLEANER ASSEMBLY

(2) Disconnect battery negative cable.
(3) Raise vehicle on hoist.
(4) **Diesel and Turbo-equipped models:** Using Tool 6638A, disconnect clutch hydraulic quick-connect (Fig. 36) (Fig. 37).

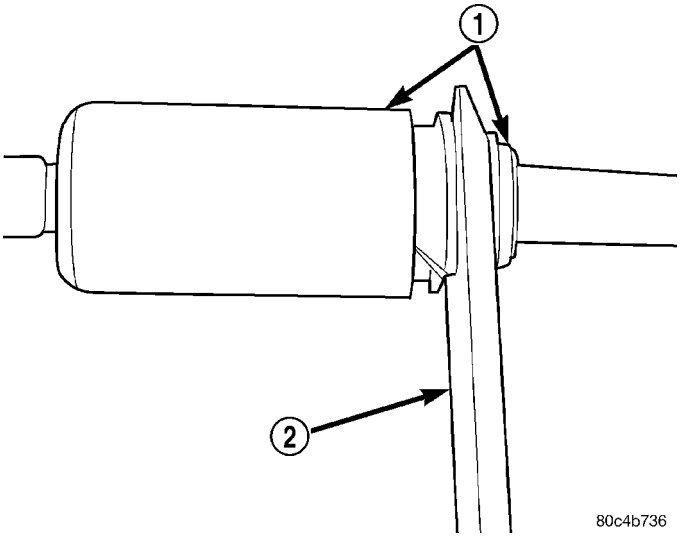

Fig. 36 Disconnect Hydraulic Circuit Using Tool 6638A

1 - QUICK CONNECT FITTING
2 - TOOL 6638A

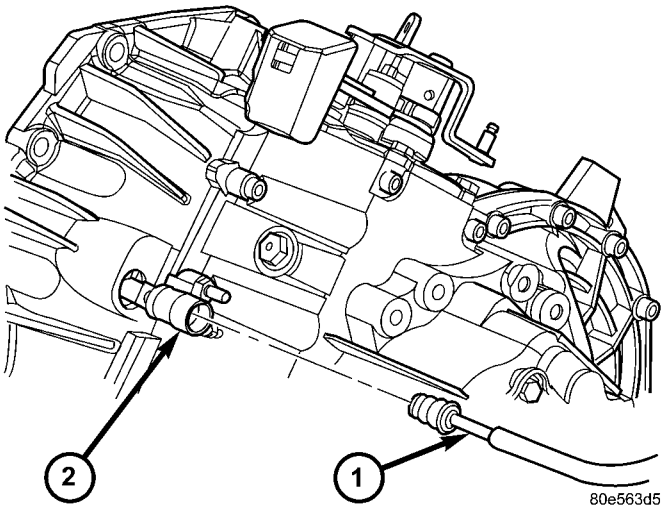

Fig. 37 Clutch Slave Cylinder Hydraulic Connection—Diesel and Turbo Models

1 - MASTER CYLINDER TUBE
2 - SLAVE CYLINDER

(5) **1.6/2.0/2.4L Non-Turbo Models:** Remove slave cylinder from transaxle (Fig. 38) (Fig. 39).

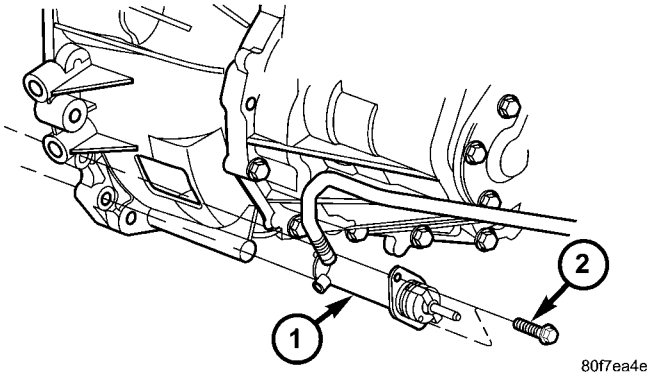

Fig. 38 Clutch Slave Cylinder at Transaxle- 1.6L Models

1 - SLAVE CYLINDER
2 - BOLT

MASTER CYLINDER - LHD (Continued)

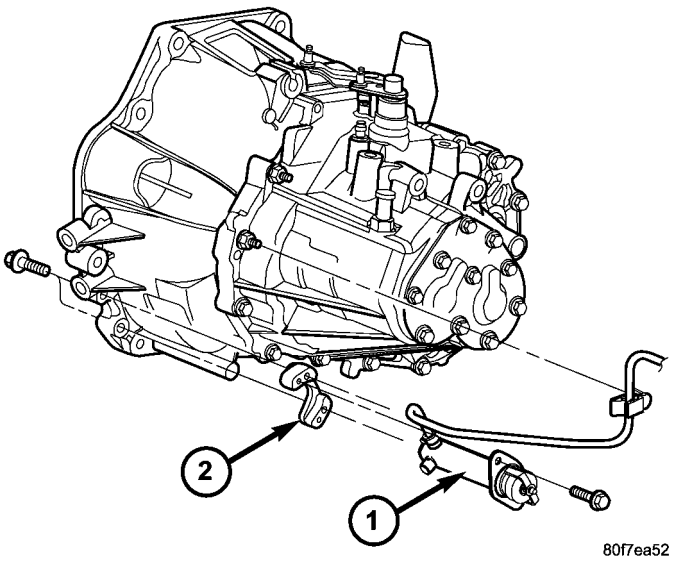

Fig. 39 Clutch Slave Cylinder at Transaxle- 2.0L Models

1 - SLAVE CYLINDER
2 - BRACKET

(6) Remove hydraulic hose from left rail retainer (Fig. 43).

(7) Lower vehicle.

(8) Remove PDC bracket and position out of way.

(9) Remove lower instrument panel bezel (Fig. 40).

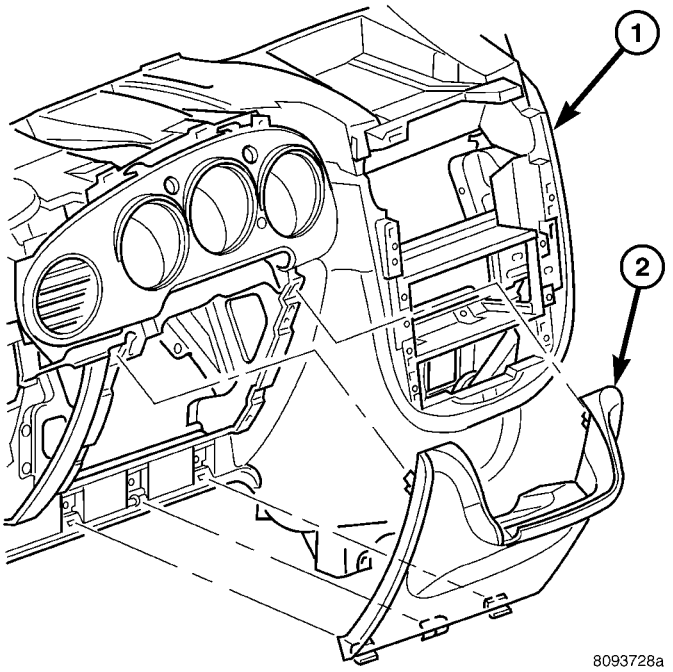

Fig. 40 Left Lower Instrument Panel Bezel

1 - INSTRUMENT PANEL
2 - INSTRUMENT PANEL STEERING COLUMN COVER

(10) Remove clip and disconnect the brake booster input rod from the brake pedal pin (Fig. 41).

(11) Remove the brake booster mounting nuts (Fig. 41).

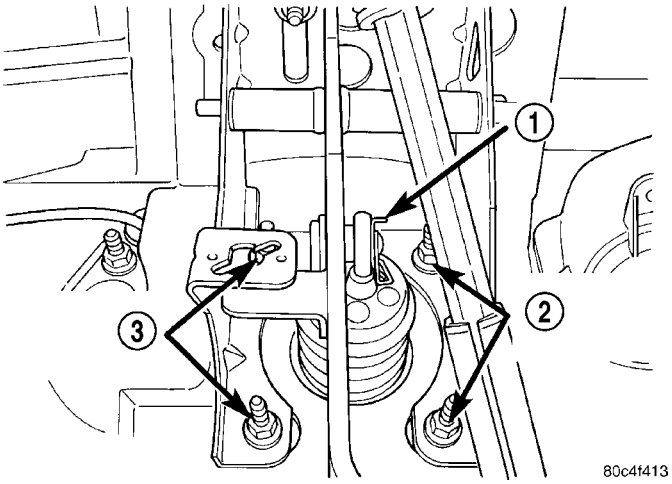

Fig. 41 Brake Booster Mounting Nuts

1 - CLIP
2 - BOOSTER MOUNTING NUTS
3 - BOOSTER MOUNTING NUTS

(12) Slide brake booster forward enough to gain access to and remove clutch master cylinder.

(13) Remove clutch master cylinder reservoir (Fig. 43).

(14) Disconnect clutch master cylinder pushrod from clutch pedal. **Inspect retainer bushing and replace if damaged in any way.**

(15) Remove two clutch master cylinder retaining nuts (Fig. 42).

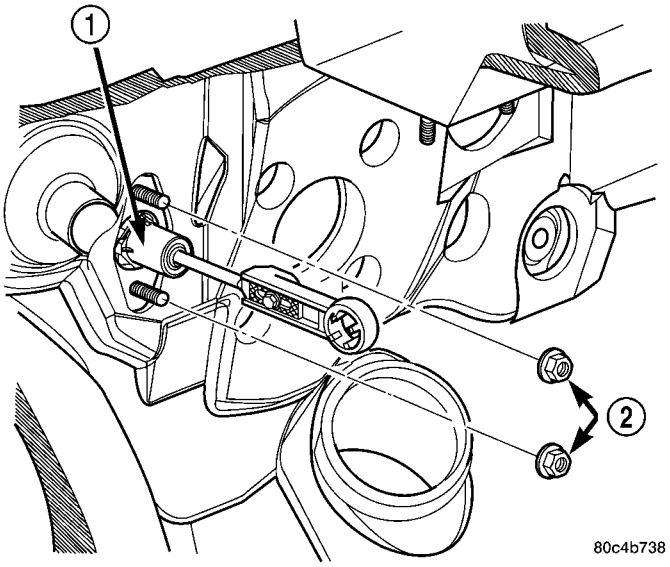

Fig. 42 Master Cylinder Mounting Nuts

1 - MASTER CYLINDER
2 - NUTS

MASTER CYLINDER - LHD (Continued)

CAUTION: Use care when removing clutch master cylinder from engine compartment. Aggressive handling can result in a damaged hydraulic tube and improper clutch release operation upon reassembly.

CAUTION: Brake fluid will damage painted surfaces. If brake fluid is spilled on any painted surfaces, wash it off immediately with water.

(16) Remove master cylinder assembly from mounting position and carefully work hydraulic pipe from out of engine compartment (Fig. 43). **1.6/2.0/2.4L (Non-Turbo)-equipped vehicles:** If master cylinder is being replaced, it is necessary to cut hydraulic tube, breaking system into two pieces for easy removal.

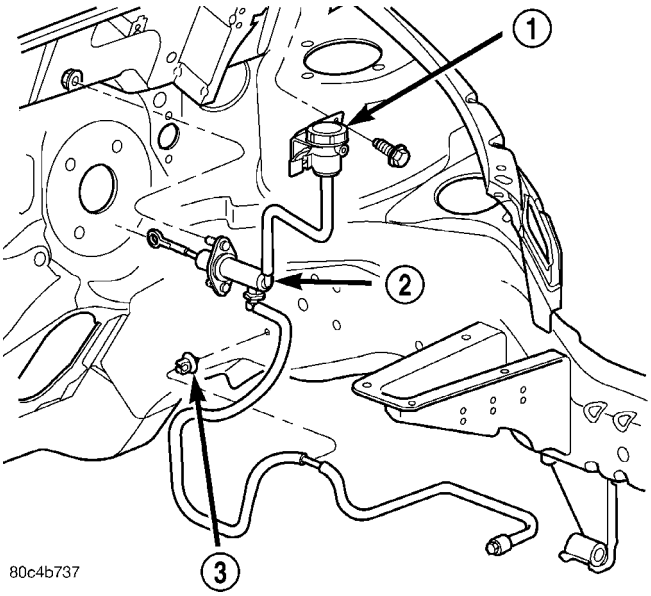

Fig. 43 Clutch Master Cylinder Removal/Installation

1 - RESERVOIR
2 - MASTER CYLINDER
3 - RETAINER

INSTALLATION

NOTE: Vehicles equipped with a 1.6/2.0/2.4L (Non-Turbo) engine have one-piece master/slave cylinder assemblies. If the master cylinder requires replacement, the master/slave cylinders must be replaced with a two-piece "quick-connect" system. If the slave cylinder requires replacement, the slave cylinder is serviced separately.

NOTE: Replacement master cylinder assemblies come pre-filled with fluid. No fluid service or system bleeding should be required, unless the hydraulic system has lost an excessive amount of fluid and has ingested air into the master or slave cylinder assembly.

(1) Install clutch master cylinder into position (Fig. 43) and carefully route hydraulic pipe into position as removed.

(2) Install clutch master cylinder reservoir (Fig. 43).

(3) Install and torque two clutch master cylinder-to-dash panel retaining nuts (Fig. 42) to 15 N·m (130 in. lbs.) torque.

(4) Loosen master cylinder pushrod adjustment screw (Fig. 44).

(5) Connect clutch master cylinder rod to clutch pedal pin. An audible "click" should be heard. If damaged, replace nylon retainer.

(6) Adjust clutch pedal position. Gently lift upward on clutch pedal. Tighten adjustment screw to 6 N·m (55 in. lbs.) torque.

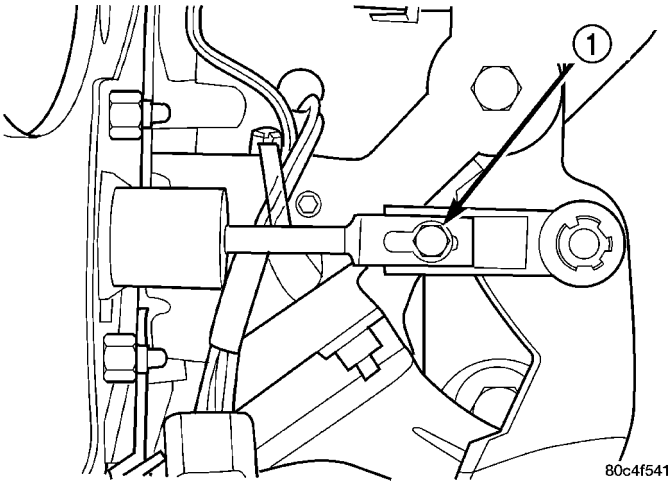

Fig. 44 Clutch Pedal Adjustment

1 - ADJUSTMENT SCREW

(7) Install brake booster into position. Connect push rod to brake pedal pin (Fig. 41).

(8) Install and torque brake booster-to-cowl panel nuts (Fig. 41) to 34 N·m (300 in.lbs.). Install push rod retaining clip.

(9) Replace stop lamp switch. Refer to Stop Lamp Switch Removal and Installation.

(10) Install lower instrument panel bezel (Fig. 40).

(11) Install PDC bracket into position.

(12) Raise vehicle on hoist.

(13) Install clutch master cylinder hydraulic pipe into left rail retainer (Fig. 43).

(14) If master cylinder is being replaced, also install service replacement slave cylinder. If original master cylinder is being re-used, install slave cylinder as shown in (Fig. 38) (Fig. 39).

(15) **Diesel and Turbo Models:** Connect hydraulic pipe to clutch slave cylinder (Fig. 39). An audible

MASTER CYLINDER - LHD (Continued)

"click" should be heard. Verify connection by pulling outward on connection.

(16) Lower vehicle.

(17) Connect battery negative cable.

(18) Install air cleaner assembly (Fig. 35).

(19) Verify that reservoir is full. Top off with DOT 3 brake fluid if necessary.

(20) Actuate clutch pedal a minimum of ten times to allow any air ingested into the system to vent to the master cylinder reservoir. If residual air becomes trapped in the system, it is necessary to bleed the clutch hydraulic system. (Refer to 6 - CLUTCH - STANDARD PROCEDURE)

(21) Verify proper clutch release system operation.

MASTER CYLINDER - RHD

DESCRIPTION

NOTE: Vehicles equipped with a 1.6/2.0/2.4L (Non-Turbo) engine have one-piece master/slave cylinder assemblies. If the master cylinder requires replacement, the master AND slave cylinders must be replaced with a two-piece system.

The clutch master cylinder mounts to the dash panel (Fig. 46) and consists of a piston and cylinder housing, an actuating push rod, an integral fluid reservoir, and an interconnecting hydraulic tube (Fig. 45). 1.6/2.0/2.4L (Non-Turbo)-equipped models have a master cylinder which incorporates a slave cylinder as well.

OPERATION

The clutch master cylinder (Fig. 46) (Fig. 45) produces the hydraulic pressure necessary to disengage the clutch. When the clutch pedal is depressed, the push rod moves the piston to produce pressure in the cylinder. This pressure moves fluid through the system to the slave cylinder, which in turn operates the release lever and bearing (T350 Models Only), disengaging the clutch. When the clutch pedal is released, pressure is relieved and the return spring returns the piston to its original position until the next pedal actuation.

REMOVAL

NOTE: Vehicles equipped with a 1.6/2.0/2.4L (Non-Turbo) engine have one-piece master/slave cylinder assemblies. If the master cylinder requires replacement, the master AND slave cylinders must be replaced with a two-piece "quick-connect" system. If the slave cylinder requires replacement, the slave cylinder is serviced separately.

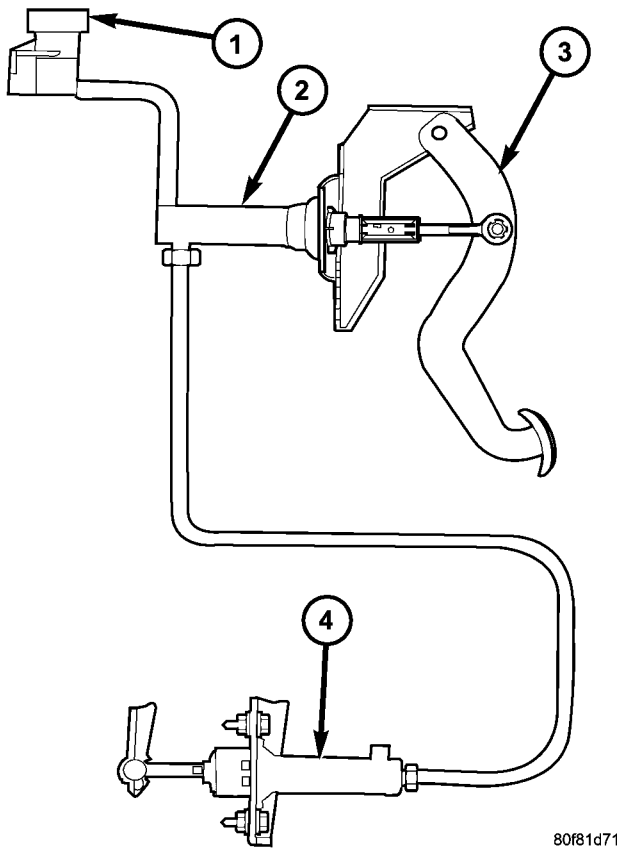

Fig. 45 Clutch Hydraulic System - RHD

1 - RESERVOIR
2 - MASTER CYLINDER
3 - PEDAL ASSEMBLY
4 - SLAVE CYLINDER

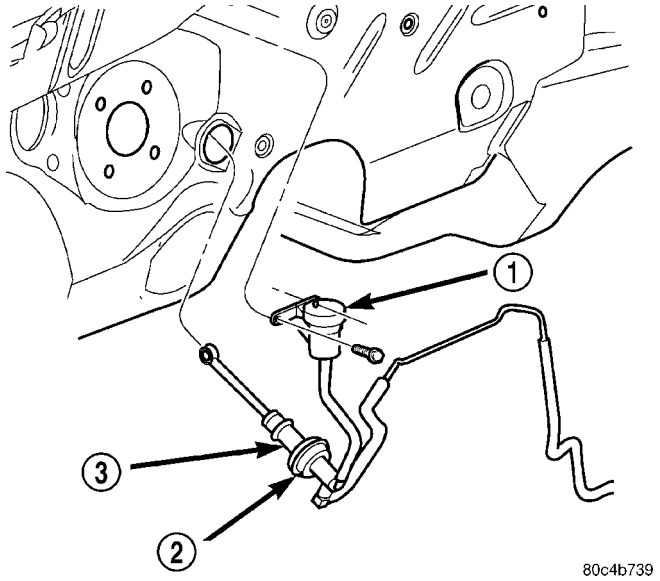

Fig. 46 Master Cylinder Mounting—RHD

1 - RESERVOIR
2 - GROMMET
3 - MASTER CYLINDER

MASTER CYLINDER - RHD (Continued)

NOTE: Replacement master cylinder assemblies come pre-filled with fluid. No fluid service or system bleeding should be required, unless the hydraulic system has lost an excessive amount of fluid and has ingested air into the master or slave cylinder assembly.

(1) Remove air cleaner assembly (Fig. 47).

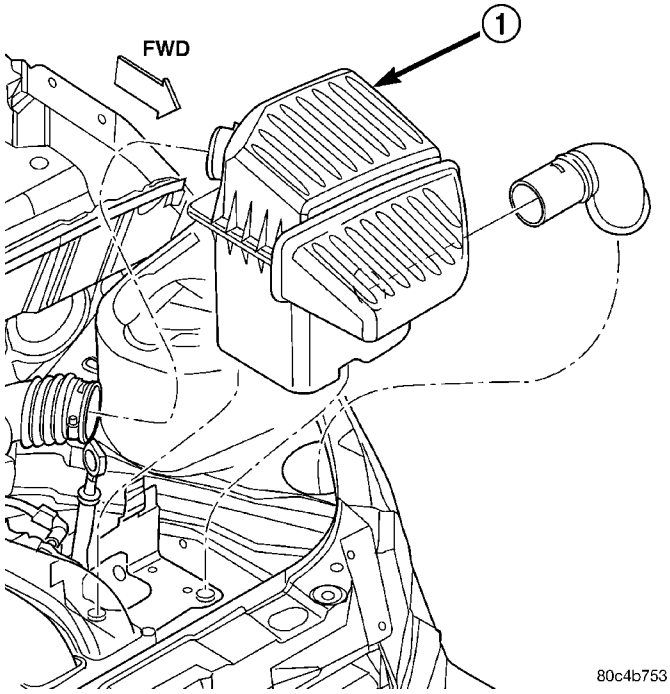

Fig. 47 Air Cleaner Assembly Removal/Installation

1 - AIR CLEANER ASSEMBLY

(2) Disconnect battery negative cable.
(3) Raise vehicle on hoist.
(4) **2.2L Turbo Diesel and 2.4L Turbo-equipped models:** Using Tool 6638A, disconnect clutch hydraulic quick-connect (Fig. 48) (Fig. 49).

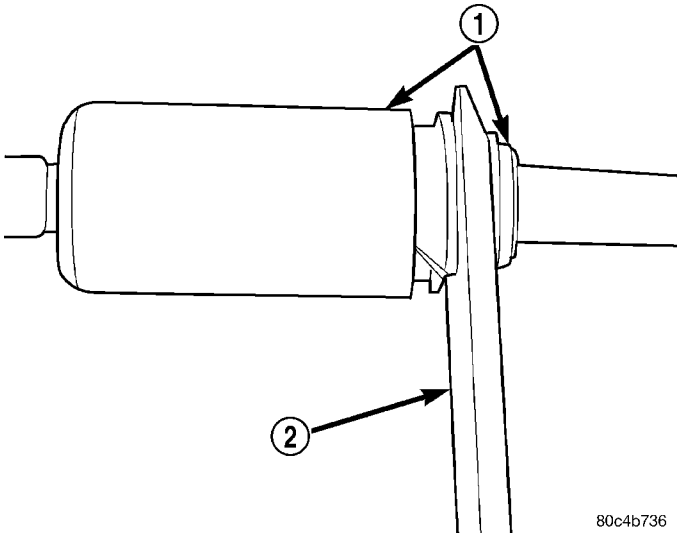

Fig. 48 Disconnect Hydraulic Circuit Using Tool 6638A

1 - QUICK CONNECT FITTING
2 - TOOL 6638A

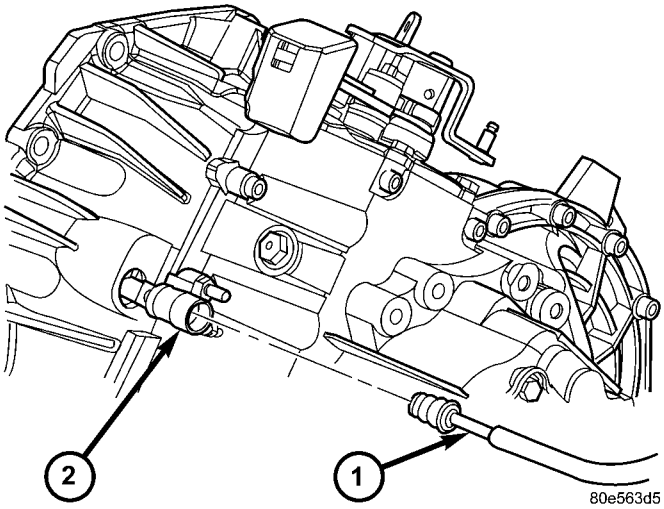

Fig. 49 Clutch Slave Cylinder Hydraulic Connection—Diesel and Turbo Models

1 - MASTER CYLINDER TUBE
2 - SLAVE CYLINDER

MASTER CYLINDER - RHD (Continued)

(5) **1.6/2.0/2.4L Non-Turbo Models:** Remove slave cylinder from transaxle (Fig. 50) (Fig. 51).

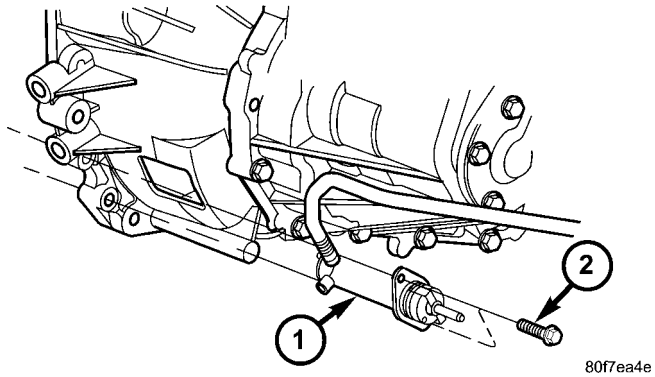

Fig. 50 Clutch Slave Cylinder at Transaxle- 1.6L Models

1 - SLAVE CYLINDER
2 - BOLT

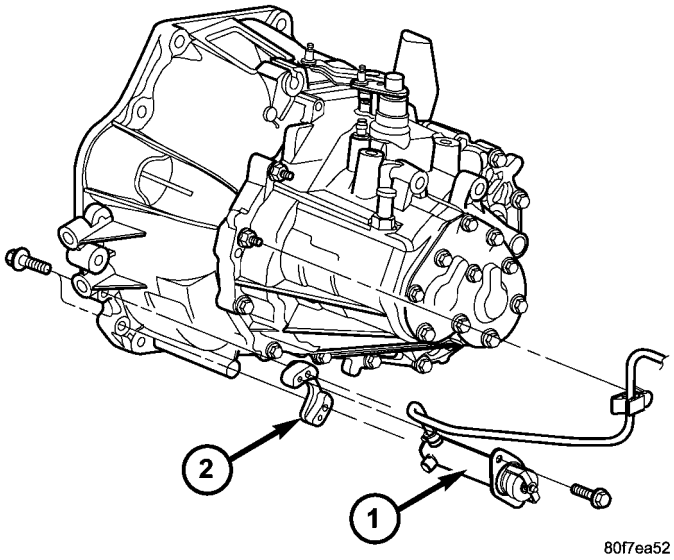

Fig. 51 Clutch Slave Cylinder at Transaxle- 2.0/2.4L

1 - SLAVE CYLINDER
2 - BRACKET

(6) Remove hydraulic hose from left rail retainer (Fig. 52).

(7) Lower vehicle.

(8) Remove lower instrument panel bezel (Fig. 53).

(9) Disconnect clutch master cylinder rod from clutch pedal.

(10) Remove coolant recovery bottle.

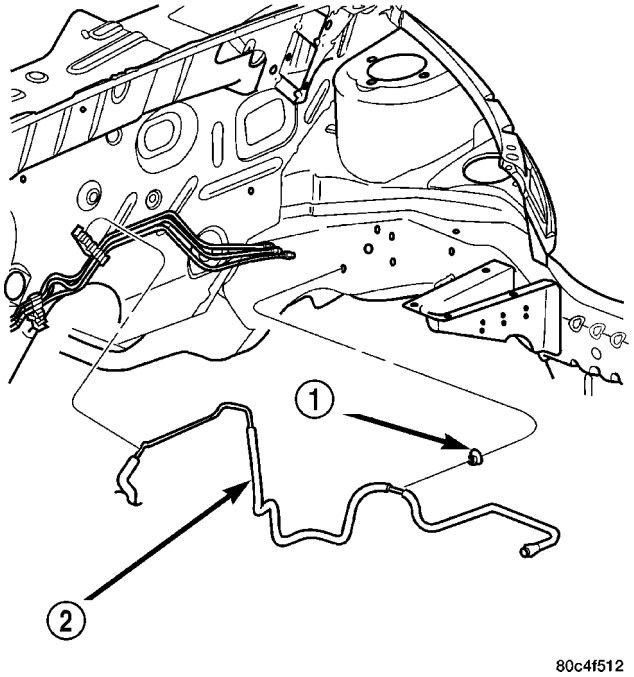

Fig. 52 Master Cylinder Pipe at Left Rail

1 - RETAINER
2 - MASTER CYLINDER PIPE

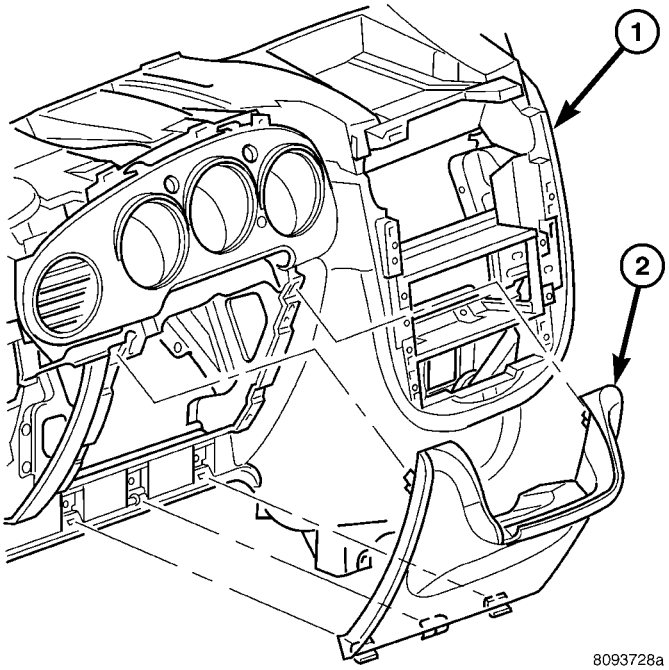

Fig. 53 Lower Instrument Panel Bezel—Typical

1 - INSTRUMENT PANEL
2 - INSTRUMENT PANEL STEERING COLUMN COVER

MASTER CYLINDER - RHD (Continued)

(11) Remove clutch master cylinder reservoir (Fig. 54).

(12) Disengage master cylinder hydraulic pipe from dash panel retainer (Fig. 52).

CAUTION: Use care when removing clutch master cylinder from engine compartment. Aggressive handling can result in a damaged hydraulic tube and improper clutch release operation upon reassembly.

(13) Disengage master cylinder grommet and slide back (Fig. 54).

(14) Release master cylinder by rotating to disengage from pedal bracket assembly. **2.0L models: Rotate master cylinder counter-clockwise (facing dash from underhood) to remove. 2.2L Turbo Diesel Models: Rotate master cylinder clockwise (facing dash from underhood) to remove.**

CAUTION: Brake fluid will damage painted surfaces. If brake fluid is spilled on any painted surfaces, wash it off immediately with water.

(15) Remove master cylinder from mounting position and carefully work hydraulic pipe from out of engine compartment (Fig. 54). **1.6/2.0/2.4L (Non-Turbo)-equipped models:** If master cylinder is being replaced, it is necessary to cut hydraulic tube, breaking system into two pieces for easy removal.

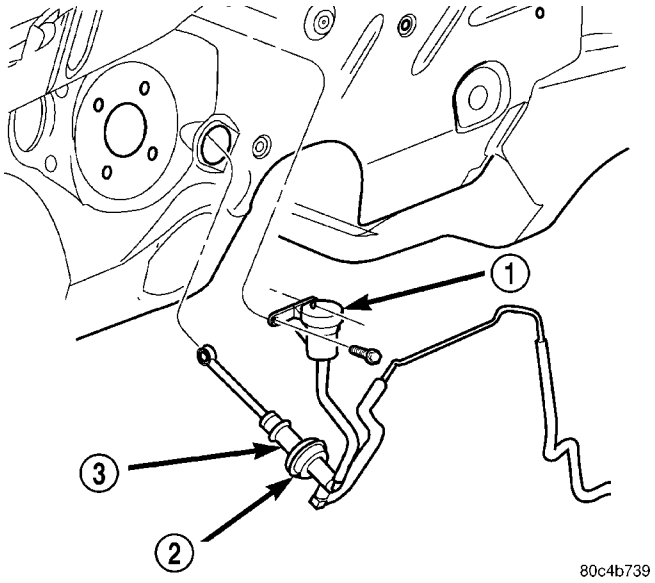

Fig. 54 Clutch Master Cylinder Removal/Installation

1 - RESERVOIR
2 - GROMMET
3 - MASTER CYLINDER

INSTALLATION

NOTE: Vehicles equipped with a 1.6/2.0/2.4L (Non-Turbo) engine have one-piece master/slave cylinder assemblies. If the master cylinder requires replacement, the master AND slave cylinders must be replaced with a two-piece "quick-connect" system. If the slave cylinder requires replacement, the slave cylinder is serviced separately.

NOTE: Replacement master cylinder assemblies come pre-filled with fluid. No fluid service or system bleeding should be required, unless the hydraulic system has lost an excessive amount of fluid and has ingested air into the master or slave cylinder assembly.

(1) Carefully route hydraulic pipe into position as removed and install clutch master cylinder into position (Fig. 54). Rotate master cylinder to engage pedal bracket assembly. **2.0L models: Rotate master cylinder clockwise (facing dash from underhood) to install. 2.2L Turbo Diesel Models: Rotate master cylinder counter-clockwise (facing dash from underhood) to install.**

(2) Install and secure grommet (Fig. 54).

(3) Install hydraulic pipe into dash panel retainer (Fig. 52).

(4) Install clutch master cylinder reservoir (Fig. 54).

(5) Raise vehicle.

(6) Install clutch master cylinder hydraulic pipe into left rail retainer (Fig. 52).

(7) If master cylinder is being replaced, install service replacement slave cylinder. If original master cylinder is being re-used, install slave cylinder as shown in (Fig. 50) (Fig. 51).

(8) **Diesel and Turbo Models:** Connect hydraulic pipe to clutch slave cylinder (Fig. 49). An audible "click" should be heard. Verify connection by pulling outward on connection.

(9) Lower vehicle.

(10) Connect clutch master cylinder rod to clutch pedal pin. An audible "click" should be heard. If damaged, replace nylon retainer.

(11) Install lower instrument panel bezel (Fig. 53).

(12) Connect battery negative cable.

(13) Install air cleaner assembly (Fig. 47).

(14) Verify that reservoir is full. Top off with DOT 3 brake fluid if necessary.

(15) Actuate clutch pedal a minimum of ten times to allow any air ingested into the system to vent to the master cylinder reservoir.

(16) Verify proper clutch release system operation. Excessive residual air in the system can be identified by a spongy pedal and/or improper clutch operation. If necessary, bleed clutch hydraulic system. (Refer to 6 - CLUTCH - STANDARD PROCEDURE)

MODULAR CLUTCH

DESCRIPTION

2.0/2.4L MODELS (Except Turbo)

The modular clutch assembly (Fig. 55) is located between the engine and manual transaxle in the transaxle bellhousing, and is responsible for transmitting engine power to the transaxle. The modular clutch is an assembly which incorporates a self-adjusting design and consists of the following components:

- Flywheel
- Clutch Disc
- Pressure Plate
- Diaphragm Spring
- Adjusting Ring
- Sensor
- Cover

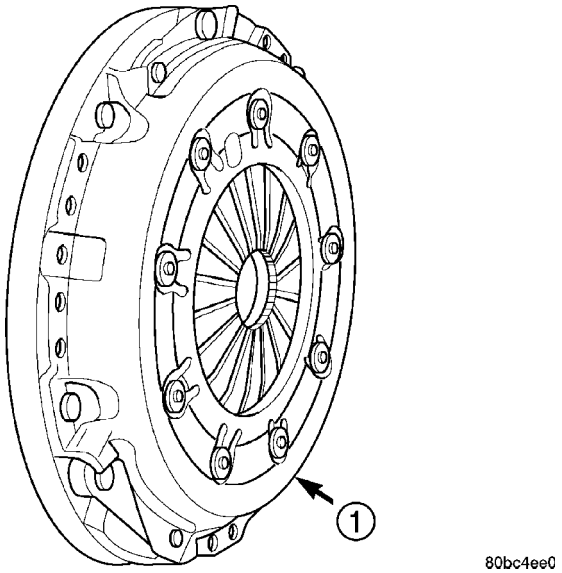

Fig. 55 Modular Clutch Assembly—Typical

1 - MODULAR CLUTCH ASSEMBLY

2.4L TURBO MODELS

Models equipped with the 2.4L Turbo Engine option also utilize a modular clutch assembly, however, this application incorporates a Dual-Mass Flywheel (DMF), is not of a self-adjusting design, and is serviceable.

OPERATION

The modular clutch assembly is designed to transmit power from the engine to the manual transaxle. This is accomplished by the friction and clamping force generated when the spring loaded pressure plate locks the clutch disc to the flywheel (Fig. 56). The clutch disc, which is splined to the transaxle input shaft, transmits power until the center of the diaphragm spring is depressed, and the clamp force is removed from the disc. The self -adjusting feature of this clutch assembly relies on the sensor ring and the adjuster ring (Fig. 57) , which works its way around a ramped clutch cover, taking up clearance as the clutch disc wears and maintaining diaphragm spring force throughout the life of the clutch. The primary benefits of this design are reduced pedal effort, constant release load over clutch life, and extended clutch life.

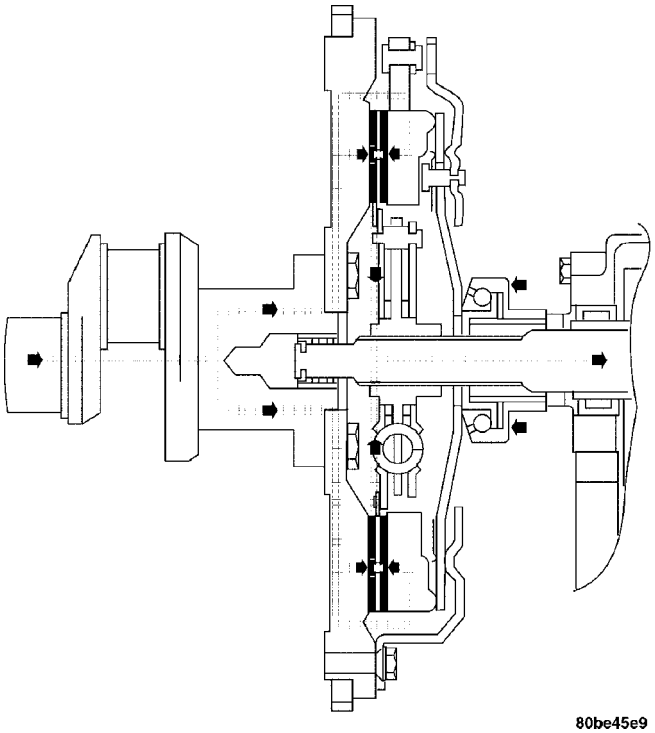

Fig. 56 Clutch Coupling Powerflow - Typical

MODULAR CLUTCH (Continued)

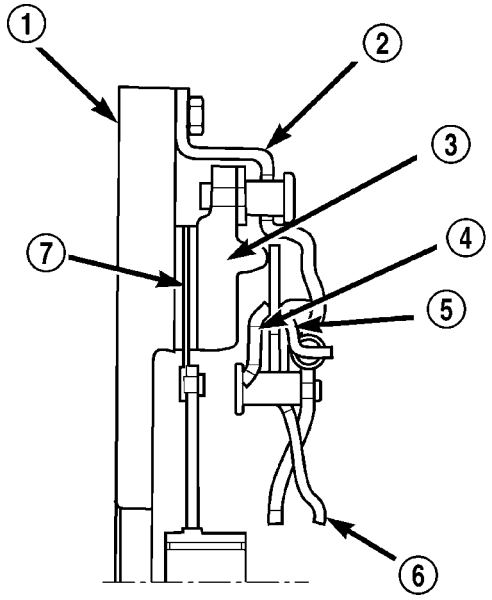

80c4b732

Fig. 57 Modular Clutch Assembly Components—Typical

1 - FLYWHEEL
2 - COVER
3 - PRESSURE PLATE
4 - SENSOR RING
5 - ADJUSTING RING
6 - DIAPHRAGM SPRING
7 - DISC

REMOVAL

(1) Remove transaxle from vehicle. (Refer to 21 - TRANSMISSION/TRANSAXLE/MANUAL - REMOVAL)

(2) Remove modular clutch assembly (Fig. 58) from transaxle input shaft.

(3) **2.4L Turbo models:** Disassemble modular clutch assembly. Remove six (6) pressure plate-to-flywheel bolts (Fig. 59). Remove pressure plate and disc from flywheel.

INSPECTION

Fluid contamination is a frequent cause of clutch malfunctions. Oil, grease, water, or other fluids on the clutch contact surfaces will cause faulty operation.

During inspection, note if any components are contaminated. Look for evidence of oil, grease, or water/road splash on clutch components.

OIL CONTAMINATION

Oil contamination indicates a leak at the rear main seal and/or transaxle input shaft. Oil leaks produce a residue of oil on the transaxle housing interior, clutch cover and flywheel. Heat buildup caused by slippage can bake the oil residue onto the components. This glaze-like residue ranges in color from amber to black.

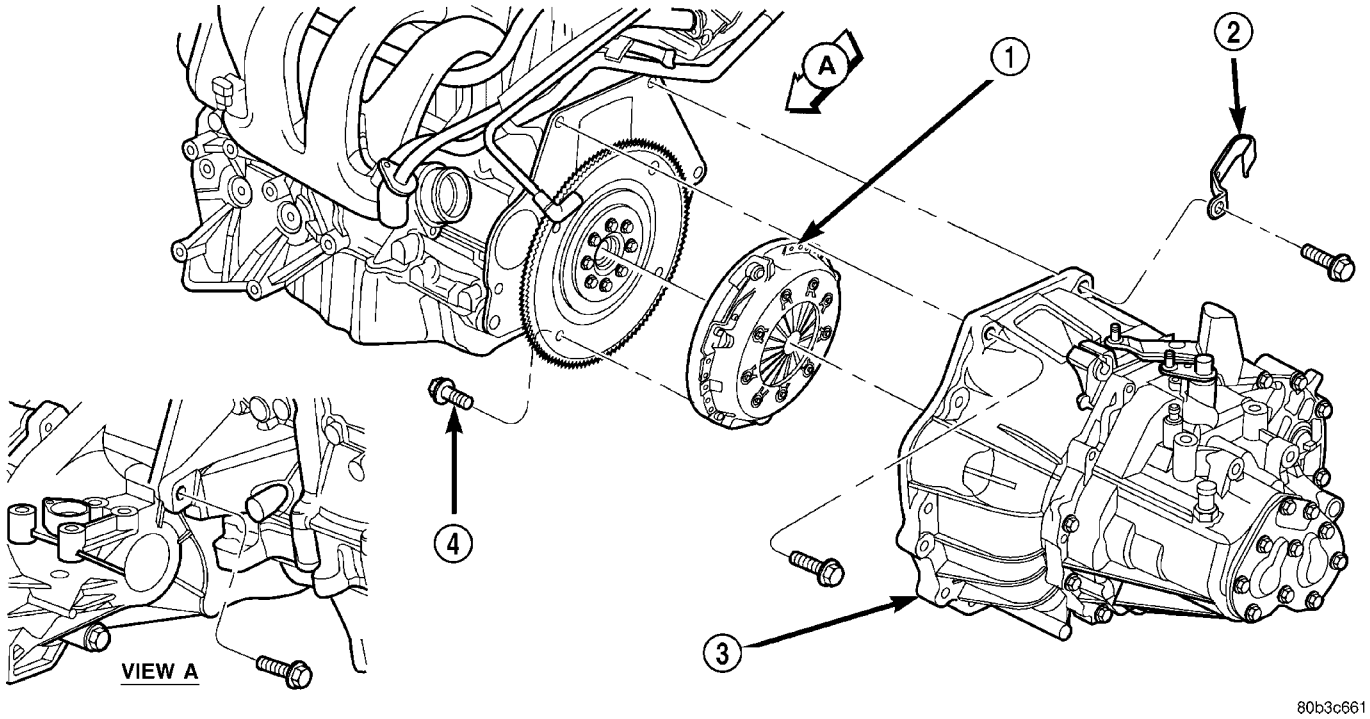

80b3c661

Fig. 58 Modular Clutch Assembly—Typical

1 - MODULAR CLUTCH ASSEMBLY
2 - CLIP
3 - TRANSAXLE
4 - CLUTCH MODULE BOLT (4)

MODULAR CLUTCH (Continued)

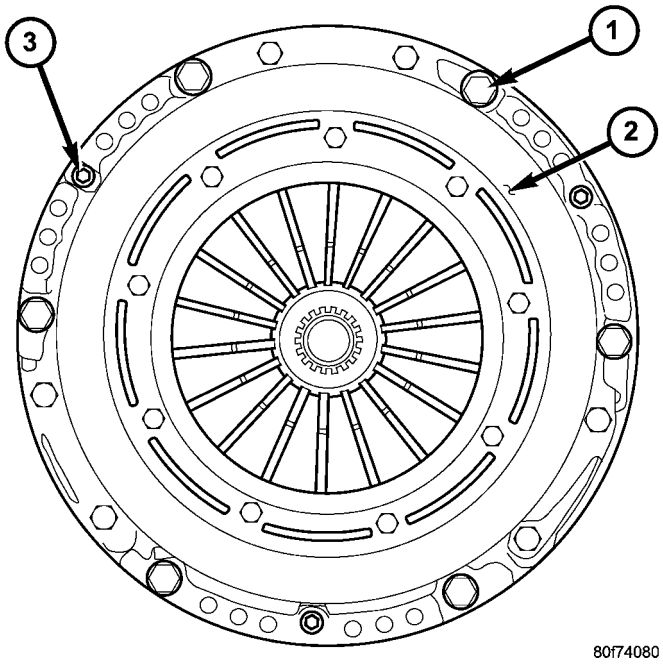

Fig. 59 Pressure Plate-to-Flywheel Bolts—Turbo

1 - BOLT (6)
2 - PRESSURE PLATE
3 - DOWEL

GREASE CONTAMINATION

Grease contamination is usually a product of over-lubrication. During clutch service, apply only a small amount of grease to the input shaft splines. Excess grease may be thrown off during operation, contaminating the disc.

ROAD SPLASH/WATER CONTAMINATION

Road splash contamination is usually caused by driving the vehicle through deep water puddles. Water can be forced into the clutch housing, causing clutch components to become contaminated. Facing of disc will absorb moisture and bond to the flywheel and/or, pressure plate, if vehicle is allowed to stand for some time before use. If this condition occurs, replacement of clutch assembly may be required. Drive the vehicle until normal clutch operating temperature has been obtained. This will dry off disc assembly, pressure plate, and flywheel.

INSTALLATION

(1) **2.4L Turbo models:** Install clutch disc to flywheel with “Flywheel Side” oriented towards flywheel. Align clutch disc to flywheel by ensuring equal distance between disc and flywheel lip exists in three places as shown in (Fig. 60). Install pressure plate to flywheel, locating on dowels (Fig. 59) and making sure not to disturb clutch disc. Install and torque six (6) pressure plate-to-flywheel bolts to 28 N·m (250 in. lbs.). Visually verify clutch disc alignment.

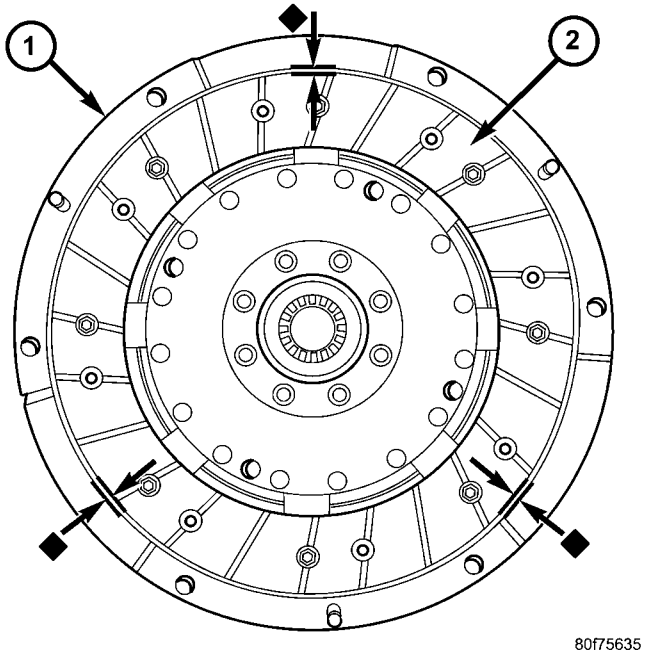

Fig. 60 Clutch Disc-to-Flywheel Orientation

1 - FLYWHEEL
2 - CLUTCH DISC
◊ - EQUAL DISTANCE FOR ALIGNMENT

(2) **All models:** Install clutch module (Fig. 58) onto input shaft.

(3) Install transaxle into vehicle. (Refer to 21 - TRANSMISSION/TRANSAXLE/MANUAL - INSTALLATION)

SLAVE CYLINDER

DESCRIPTION

1.6/2.0L/2.4L MODELS (Except Diesel & Turbo)

The clutch slave cylinder integral to the clutch master cylinder and is fastened to transaxle bellhousing (Fig. 61) (Fig. 62), and consists of a hydraulic piston and cylinder, seal and return spring.

DIESEL AND TURBO MODELS

The clutch release system utilizes a slave cylinder of a concentric design, having all components fixed about the same axis. The concentric slave cylinder (CSC) is mounted to the inside of the clutch bellhousing (Fig. 63), and is serviced only as an assembly.

The concentric design permits high efficiency, resulting in low and consistent pedal effort, as well as automatic adjustment to compensate for clutch disc wear.

SLAVE CYLINDER (Continued)

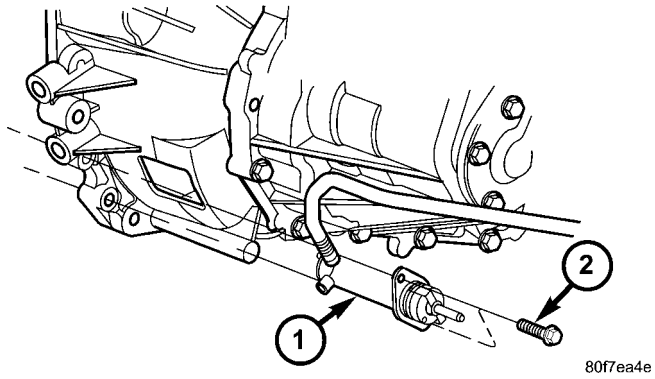

Fig. 61 Clutch Slave Cylinder at Transaxle- 1.6L Models

1 - SLAVE CYLINDER
2 - BOLT

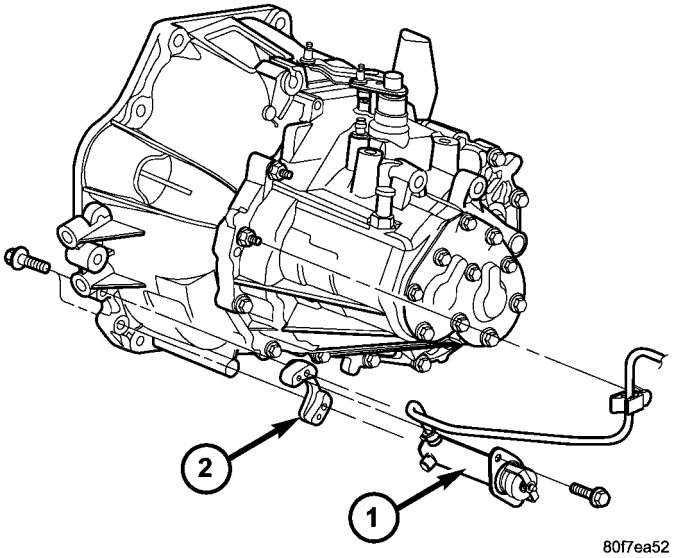

Fig. 62 Clutch Slave Cylinder at Transaxle- 2.0L Models

1 - SLAVE CYLINDER
2 - BRACKET

The CSC is a self-contained unit, consisting of a main body and piston, spring, integrated release bearing, and a rubber boot (Fig. 64).

REMOVAL

REMOVAL—1.6/2.0/2.4L (Except Diesel and Turbo)

(1) Raise vehicle on hoist.

(2) Remove cotter key from hydraulic tube-to-slave cylinder connection point.

(3) Using a suitable punch, drive out roll pin and discard.

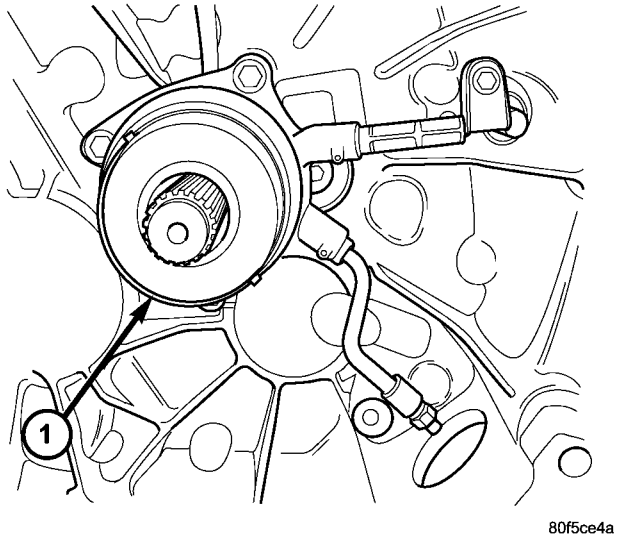

Fig. 63 Slave Cylinder Location—Diesel and Turbo Models

1 - CONCENTRIC SLAVE CYLINDER (CSC)

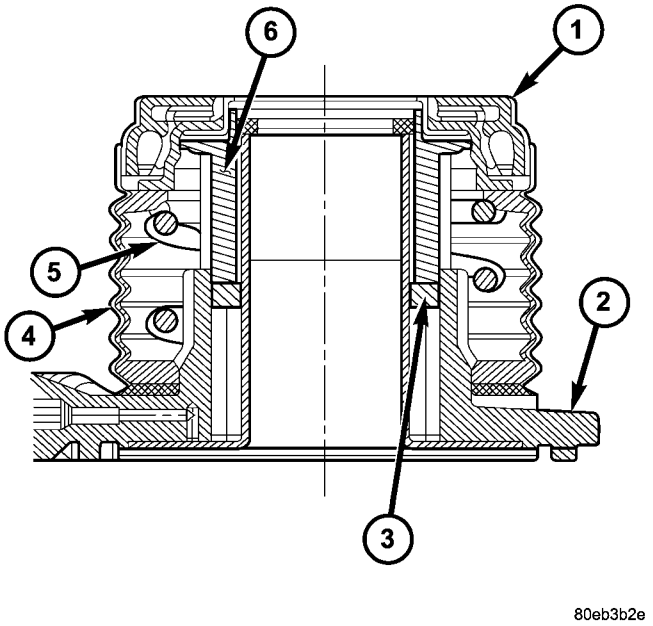

Fig. 64 Concentric Slave Cylinder (CSC) Components

1 - RELEASE BEARING
2 - BODY
3 - SEAL
4 - BOOT
5 - SPRING
6 - PISTON

(4) Remove slave cylinder mounting bolts (Fig. 65) (Fig. 66).

SLAVE CYLINDER (Continued)

(5) Remove slave cylinder from transaxle and separate from hydraulic tube. Allow brake fluid to drain into suitable container.

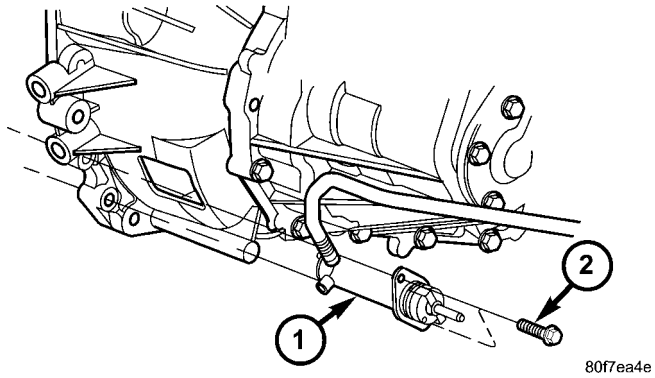

Fig. 65 Clutch Slave Cylinder at Transaxle—1.6L Models

1 - SLAVE CYLINDER
2 - BOLT

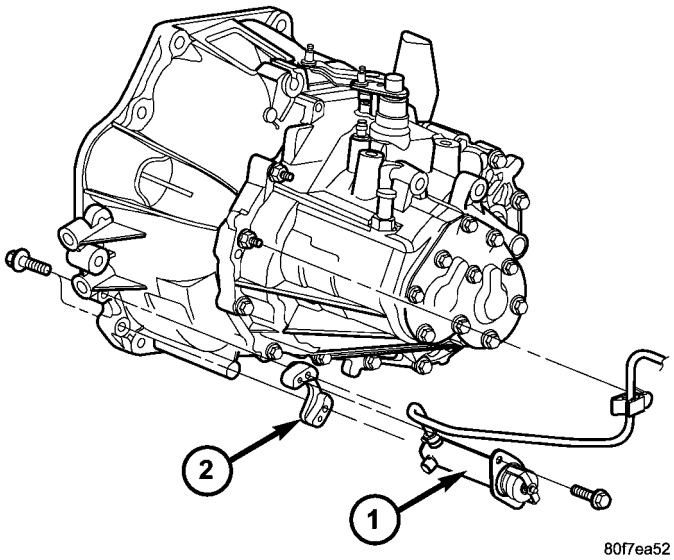

Fig. 66 Clutch Slave Cylinder at Transaxle—2.0L Models

1 - SLAVE CYLINDER
2 - BRACKET

REMOVAL—DIESEL AND TURBO MODELS

(1) Remove transaxle from vehicle. (Refer to 21 - TRANSMISSION/TRANSAXLE/MANUAL - REMOVAL)

(2) Remove four (4) slave cylinder-to-clutch bellhousing bolts and remove slave cylinder from transaxle (Fig. 67). Clean old sealer from threads using suitable tap.

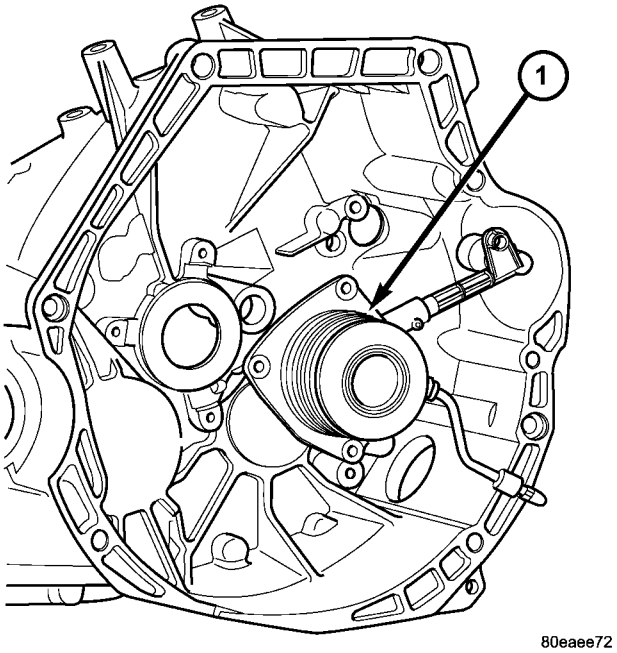

Fig. 67 CSC Removal/Installation

1 - CONCENTRIC SLAVE CYLINDER (CSC)

INSTALLATION

INSTALLATION—1.6/2.0/2.4L MODELS (Except Diesel and Turbo)

(1) Install the slave cylinder assembly into position on transaxle (Fig. 65) (Fig. 66).

(2) Tighten slave cylinder-to-transaxle bolts to 19 N·m (168 in. lbs.) on 2.0/2.4L applications, and 12 N·m (105 in. lbs.) torque on 1.6L applications.

(3) Connect clutch hydraulic supply tube to slave cylinder. Install NEW roll pin and cotter key.

(4) Lower vehicle.

(5) Verify clutch master cylinder reservoir is full. Top off with DOT 3 brake fluid if necessary.

(6) Bleed clutch hydraulic system (Refer to 6 - CLUTCH - STANDARD PROCEDURE).

(7) Verify proper clutch release system operation.

INSTALLATION—DIESEL AND TURBO MODELS

(1) Install slave cylinder to transaxle using new bolts (Fig. 67).

NOTE: Torque three CSC body screws first, then fluid tube attachment.

(2) Torque slave cylinder-to-case bolts in three steps:
1. 2 N·m (18 in. lbs.)
2. 5 N·m (44 in. lbs.)
3. 8.4 N·m (74 in. lbs.)

(3) Install transaxle. (Refer to 21 - TRANSMISSION/TRANSAXLE/MANUAL - INSTALLATION)

COOLING

TABLE OF CONTENTS

page

COOLING
WARNING
COOLING SYSTEM WARNINGS 1
SPECIFICATIONS
TORQUE - 1.6L SOHC 1
TORQUE - 2.0/2.4L 2
SPECIAL TOOLS
COOLING SYSTEM 2

page

ACCESSORY DRIVE - 1.6L SOHC 3
ACCESSORY DRIVE - 2.0/2.4L DOHC 6
ENGINE - 1.6L SOHC 12
ENGINE - 2.0/2.4L DOHC 31
TRANSMISSION 61

COOLING

WARNING

COOLING SYSTEM WARNINGS

WARNING: ANTIFREEZE IS AN ETHYLENE GLYCOL BASED COOLANT AND IS HARMFUL IF SWALLOWED OR INHALED. IF SWALLOWED, DRINK TWO GLASSES OF WATER AND INDUCE VOMITING. IF INHALED, MOVE TO FRESH AIR AREA. SEEK MEDICAL ATTENTION IMMEDIATELY. DO NOT STORE IN OPENED OR UNMARKED CONTAINERS. WASH SKIN AND CLOTHING THOROUGHLY AFTER COMING IN CONTACT WITH ETHYLENE GLYCOL. KEEP OUT OF REACH OF CHILDREN AND PETS. DISPOSE OF GLYCOL BASED COOLANT PROPERLY, CONTACT YOUR DEALER OR GOVERNMENT AGENCY FOR LOCATION OF COLLECTION CENTER IN YOUR AREA. DO NOT OPEN A COOLING SYSTEM WHEN THE ENGINE IS AT OPERATING TEMPERATURE OR HOT UNDER PRESSURE, PERSONAL INJURY CAN RESULT. AVOID RADIATOR COOLING FAN WHEN ENGINE COMPARTMENT RELATED SERVICE IS PERFORMED, PERSONAL INJURY CAN RESULT.

SPECIFICATIONS

TORQUE - 1.6L SOHC

DESCRIPTION	N·m	Ft. Lbs.	In. Lbs.
A/C Condenser to Radiator—Screws	8	—	70
Accessory Drive Belt Tensioner—Fasteners	12	—	105
Coolant Recovery Container—Nut/Screw	4	—	35
Coolant Temperature Sensor	17	—	150
Idler Pulley—Fastener	28	—	250
Radiator Fan to Radiator—Screws	6	—	55
Thermostat Housing—Screws	7	—	65
Water Pump/Power Steering Pump to Engine Block—Bolts	28	21	—

COOLING (Continued)

TORQUE - 2.0/2.4L

DESCRIPTION	N·m	Ft. Lbs.	In. Lbs.
A/C Condenser to Radiator—Screws	8	—	70
Automatic Belt Tensioner Pulley—Bolt	27	20	—
Automatic Belt Tension Assembly—Bolt	54	40	—
Charge Air Cooler to Radiator (Turbo Equipped)—Screws	8	—	70
Coolant Recovery Bottle—Nut/Screw	4	—	35
Coolant Outlet Connector—Screws	12.5	—	110
Engine Coolant Temperature Sensor	19	—	168
Generator Mounting—Pivot Bolt	54	40	—
Generator Mounting—Locking Nut	54	40	—
Radiator Fan to Radiator—Screws	6	—	55
Radiator Inlet Neck (Turbo Equipped)—Screws	6	—	55
Thermostat Housing to Cylinder Head—Bolts	28	20	—
Transmission Cooler Hose—Clamps	2	—	18
Transmission Cooler to Radiator—Screws	8	—	70
Water Pump to Engine Block—Bolts	12	—	105
Water Pump Inlet Tube to Engine Block—Bolts	12	—	105

SPECIAL TOOLS

COOLING SYSTEM

Filling Aid Funnel 8195

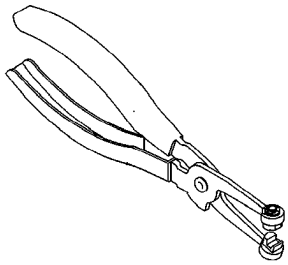

Hose Clamp Pliers 8495

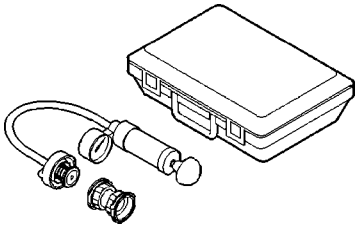

Cooling System Tester – 7700

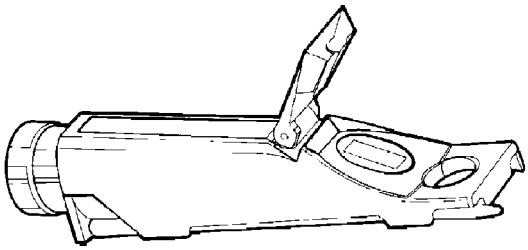

Coolant Refractometer – 8286

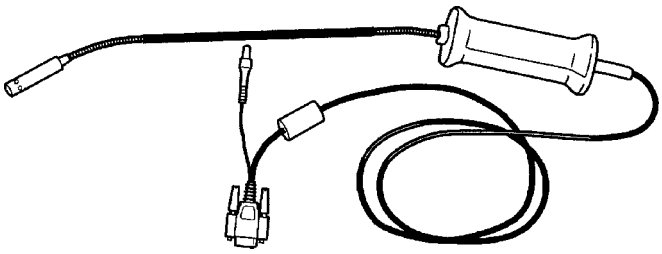

Belt Tension Gauge Adapter – 8371

DRB III® with PEP Module – OT-CH6010A

ACCESSORY DRIVE - 1.6L SOHC

TABLE OF CONTENTS

page

ACCESSORY DRIVE - 1.6L SOHC
DESCRIPTION 3
DIAGNOSIS AND TESTING - ACCESSORY DRIVE BELT DIAGNOSIS 3
ACCESSORY DRIVE BELT
REMOVAL 4
CLEANING 4
INSPECTION 4
INSTALLATION 4
ACCESSORY DRIVE BELT TENSIONER
REMOVAL 5
INSTALLATION 5
IDLER PULLEY
REMOVAL 5
INSTALLATION 5

ACCESSORY DRIVE - 1.6L SOHC

DESCRIPTION

The accessory drive consists of one Poly-V type drive belt that drives the generator, power steering/water pump, and air conditioning compressor (if equipped). The belt tension is controlled by an automatic belt tensioner. If equipped with air conditioning, the accessory drive also has an idler pulley (Fig. 1) or (Fig. 2).

DIAGNOSIS AND TESTING - ACCESSORY DRIVE BELT DIAGNOSIS

CONDITION	POSSIBLE CAUSE	CORRECTION
BELT SLIPPAGE	1. Belt slipping because of insufficient tension.	1. Replace accessory drive belt tensioner.
	2. Belt excessively glazed or hardened from heat and excessive slippage.	2. Replace belt.
	3. Incorrect belt.	3. Replace belt.
	4. Driven component bearing failure.	4. Replace faulty component.
	5. Belt or pulley subjected to substance (belt dressing, oil, ethylene glycol) that has reduced friction.	5. Replace belt and clean pulleys.
BELT NOISE (OBJECTIONABLE SQUEAL, SQUEAK, OR RUMBLE)	1. Belt slippage.	1. Refer to BELT SLIPPAGE above.
	2. Foreign material imbedded in belt.	2. Replace belt.
	3. Non-uniform belt.	3. Replace belt.
	4. Non-uniform groove or eccentric/bent pulley.	4. Replace pulley(s).
	5. Bearing noise.	5. Locate and repair.
BELT ROLLED OVER IN GROOVE OR BELT JUMPS OFF	1. Broken cord in belt.	1. Replace belt.
	2. Belt tension too loose, or too tight.	2. Replace accessory drive belt tensioner.
	3. Non-uniform grooves or eccentric/bent pulley.	3. Replace pulley(s).
	4. Foreign object(s) in grooves.	4. Remove foreign object(s) in groove.

ACCESSORY DRIVE BELT

REMOVAL

(1) Disconnect negative battery cable.

(2) Insert a 1/2” drive breaker bar into the square opening of the accessory drive belt tensioner.

(3) Rotate accessory drive belt tensioner counter-clockwise until accessory drive belt can be removed from pulleys (Fig. 1) or (Fig. 2). Remove accessory drive belt.

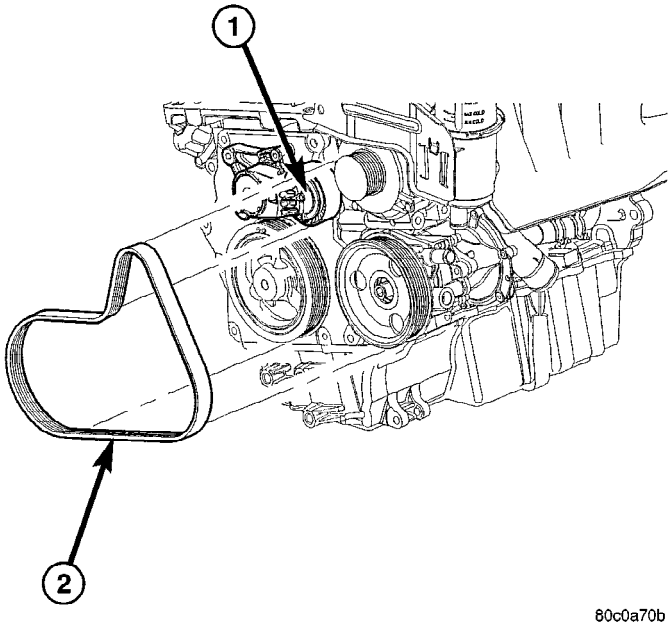

Fig. 1 Accessory Drive Belt - without A/C

1 - ACCESSORY DRIVE BELT TENSIONER
2 - ACCESSORY DRIVE BELT

CLEANING

Clean all foreign debris from belt pulley grooves. The belt pulleys must be free of oil, grease, and coolants before installing the drive belt.

INSPECTION

New developments in belt technology allow the belt to greatly increase its life expectancy. Unless the belt exhibits one of the following conditions do not replace the belt.

- Excessive wear
- Frayed cords
- Severe glazing

Poly-V Belt system may develop minor cracks across the ribbed side (due to reverse bending). These minor cracks are considered normal and acceptable. Parallel cracks are not (Fig. 3).

NOTE: Do not use any type of belt dressing or restorer on Poly-V Belts.

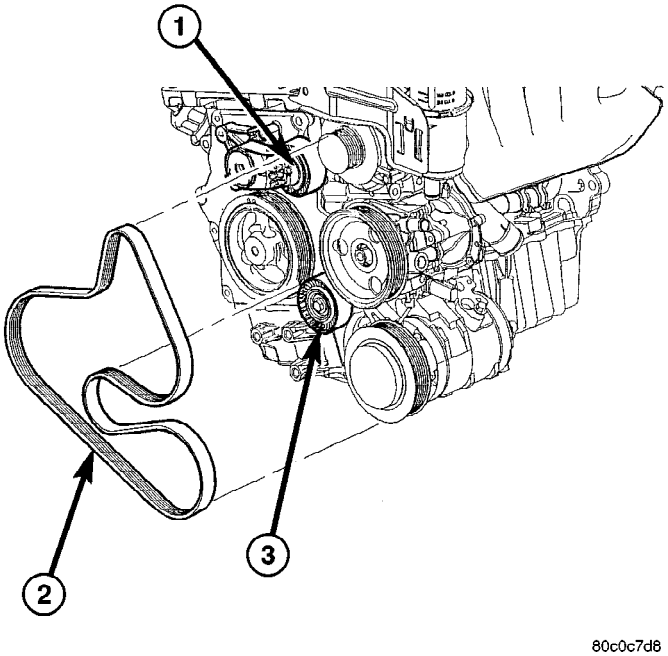

Fig. 2 Accessory Drive Belt - with A/C

1 - ACCESSORY DRIVE BELT TENSIONER
2 - ACCESSORY DRIVE BELT
3 - IDLER PULLEY

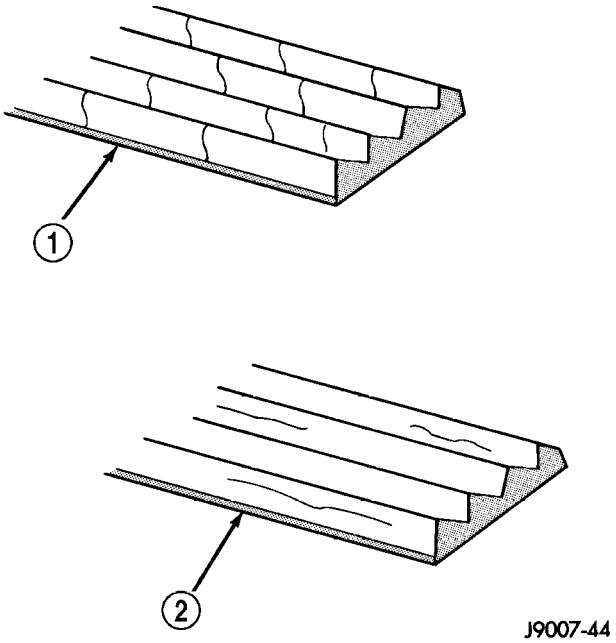

Fig. 3 Drive Belt Inspection

1 - NORMAL CRACKS - BELT OK
2 - NOT NORMAL CRACKS - REPLACE BELT

INSTALLATION

NOTE: When installing drive belt on the pulleys, make sure that belt is properly routed and all V-grooves make proper contact with pulley grooves.

ACCESSORY DRIVE BELT (Continued)

(1) Install belt around all the pulleys except for the generator pulley (Fig. 1) or (Fig. 2).

(2) Rotate accessory drive belt tensioner counterclockwise until accessory drive belt can be installed on the generator pulley. Release spring tension onto belt.

(3) Remove breaker bar from accessory drive belt tensioner.

(4) Connect negative battery cable.

ACCESSORY DRIVE BELT TENSIONER

REMOVAL

(1) Disconnect negative battery cable.

(2) Raise vehicle on hoist.

(3) Remove belt splash shield.

(4) Remove accessory drive belt (Refer to 7 - COOLING/ACCESSORY DRIVE/DRIVE BELTS - REMOVAL).

(5) Remove fasteners securing accessory drive belt tensioner to timing chain cover (Fig. 4). Remove accessory drive belt tensioner.

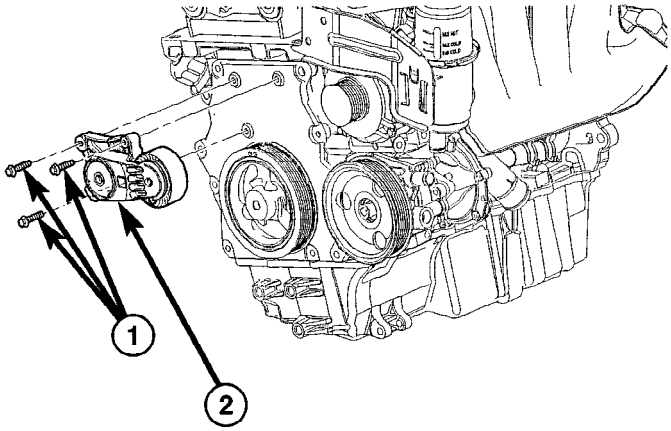

80c0b5ac

Fig. 4 Accessory Drive Belt Tensioner

1 - ACCESSORY DRIVE BELT TENSIONER FASTENERS
2 - ACCESSORY DRIVE BELT TENSIONER

INSTALLATION

(1) Position accessory drive belt tensioner in mounting position. Install fasteners securing accessory drive belt tensioner to timing chain cover. Torque fasteners to 12 N·m (105 in. lbs.) (Fig. 4).

(2) Install accessory drive belt (Refer to 7 - COOLING/ACCESSORY DRIVE/DRIVE BELTS - INSTALLATION).

(3) Install belt splash shield.

(4) Lower vehicle.

(5) Connect negative battery cable.

IDLER PULLEY

REMOVAL

(1) Disconnect negative battery cable.

(2) Raise vehicle on hoist.

(3) Remove belt splash shield.

(4) Remove accessory drive belt (Refer to 7 - COOLING/ACCESSORY DRIVE/DRIVE BELTS - REMOVAL).

(5) Remove fastener securing idler pulley to front of engine (Fig. 5). Remove idler pulley.

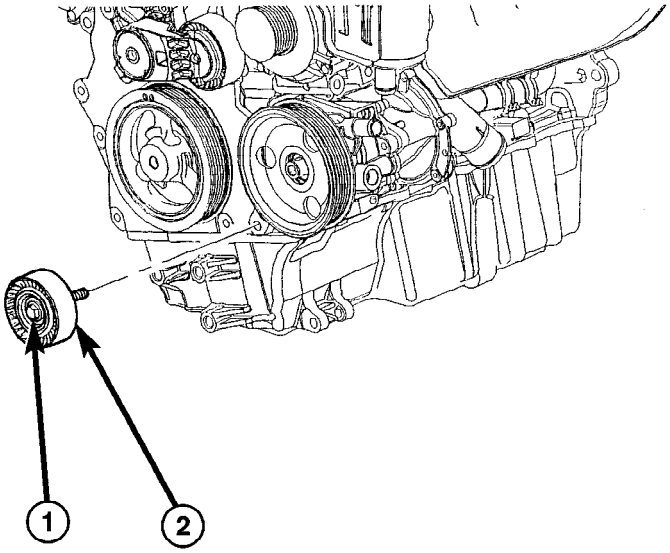

80c0b5a2

Fig. 5 Idler Pulley

1 - IDLER PULLEY FASTENER
2 - IDLER PULLEY

INSTALLATION

(1) Position pulley in mounting position. Install fastener securing idler pulley to front of engine. Torque fastener to 28 N·m (250 in. lbs.) (Fig. 5).

(2) Install accessory drive belt (Refer to 7 - COOLING/ACCESSORY DRIVE/DRIVE BELTS - INSTALLATION).

(3) Install belt splash shield.

(4) Lower vehicle.

(5) Connect negative battery cable.

ACCESSORY DRIVE - 2.0/2.4L DOHC

TABLE OF CONTENTS

	page
DRIVE BELTS	
DESCRIPTION	6
DIAGNOSIS AND TESTING ACCESSORY DRIVE BELTS	7
REMOVAL	8
CLEANING	8
INSPECTION	8
INSTALLATION	10
ADJUSTMENTS BELT TENSION	11
AUTOMATIC BELT TENSIONER AND PULLEY	
DESCRIPTION	11
REMOVAL	11
INSTALLATION	11

DRIVE BELTS

DESCRIPTION

The accessory drive consist of two Poly-V type drive belts (Fig. 1). One belt drives the generator, the other drives the power steering pump and air conditioning compressor (if equipped). The power steering/air conditioning belt is tensioned by an automatically controlled belt tensioner. The generator belt is manually tensioned using an adjusting bolt and a locking nut.

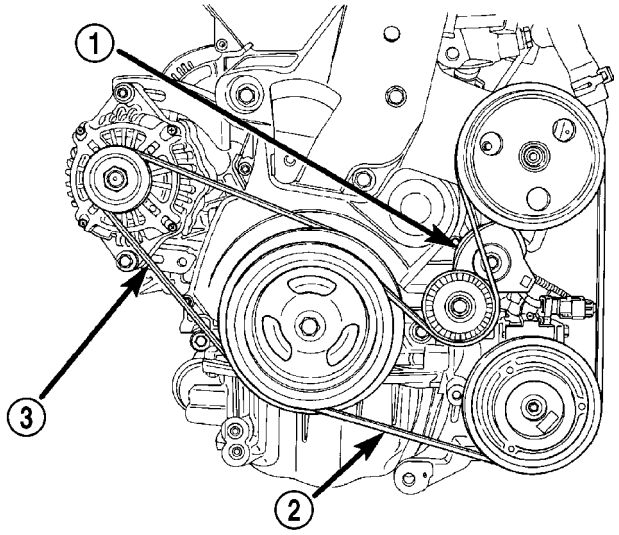

80c4f4e1

Fig. 1 Accessory Drive Belts

1 - AUTOMATIC BELT TENSIONER
2 - POWER STEERING PUMP / A/C COMPRESSOR BELT
3 - GENERATOR BELT

DRIVE BELTS (Continued)

DIAGNOSIS AND TESTING

ACCESSORY DRIVE BELTS

CONDITION	POSSIBLE CAUSE	CORRECTION
BELT SLIPPAGE	1. Belt slipping because of insufficient tension.	1. Retension generator belt. Replace the power steering belt's automatic belt tensioner.
	2. Belt excessively glazed or hardened from heat and excessive slippage.	2. Replace belt.
	3. Incorrect belt.	3. Replace belt.
	4. Driven component bearing failure.	4. Replace faulty component.
	5. Belt or pulley subjected to substance (belt dressing, oil, ethylene glycol) that has reduced friction.	5. Replace belt and clean pulleys.
BELT NOISE (OBJECTIONABLE SQUEAL, SQUEAK, OR RUMBLE)	1. Belt slippage.	1. Retension generator belt, replace belt, or automatic belt tensioner.
	2. Foreign material imbedded in belt.	2. Replace belt.
	3. Non-uniform belt.	3. Replace belt.
	4. Misaligned pulley(s).	4. Align accessories.
	5. Non-uniform groove or eccentric pulley.	5. Replace pulley(s).
	6. Bearing noise.	6. Locate and repair.
BELT ROLLED OVER IN GROOVE OR BELT JUMPS OFF	1. Broken cord in belt.	1. Replace belt.
	2. Belt tension too loose, or too tight.	2. Retension generator belt. Replace the power steering belt's automatic belt tensioner.
	3. Misaligned pulleys.	3. Align accessories.
	4. Non-uniform grooves or eccentric pulley.	4. Replace pulley(s).
	5. Foreign object(s) in grooves.	5. Remove foreign objects in groove.

DRIVE BELTS (Continued)

REMOVAL

POWER STEERING PUMP/AIR CONDITIONING COMPRESSOR BELT

(1) Remove belt splash shield (Fig. 2).

(2) Using a wrench, rotate belt tensioner clockwise (Fig. 3) until belt can be removed from power steering pump pulley. Gently, release spring tension on tensioner.

(3) Remove belt (Fig. 4).

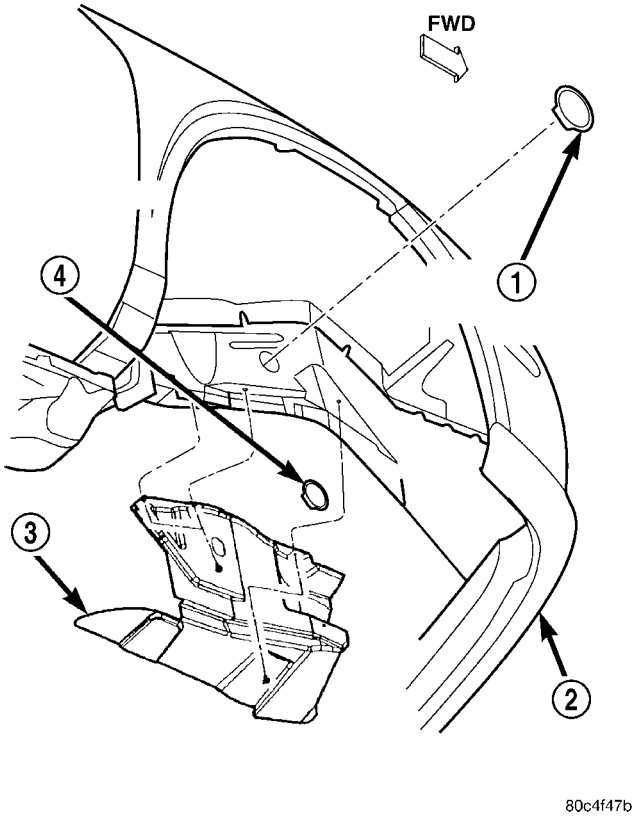

Fig. 2 Splash Shield

1 - RIGHT MOUNT BOLT ACCESS PLUG
2 - FASCIA
3 - SPLASH SHIELD
4 - CRANKSHAFT BOLT ACCESS PLUG

GENERATOR BELT

(1) Remove power steering pump/air conditioning compressor drive belt.

(2) Loosen pivot bolt, then locking nut and adjusting bolt (Fig. 5).

(3) Remove generator belt.

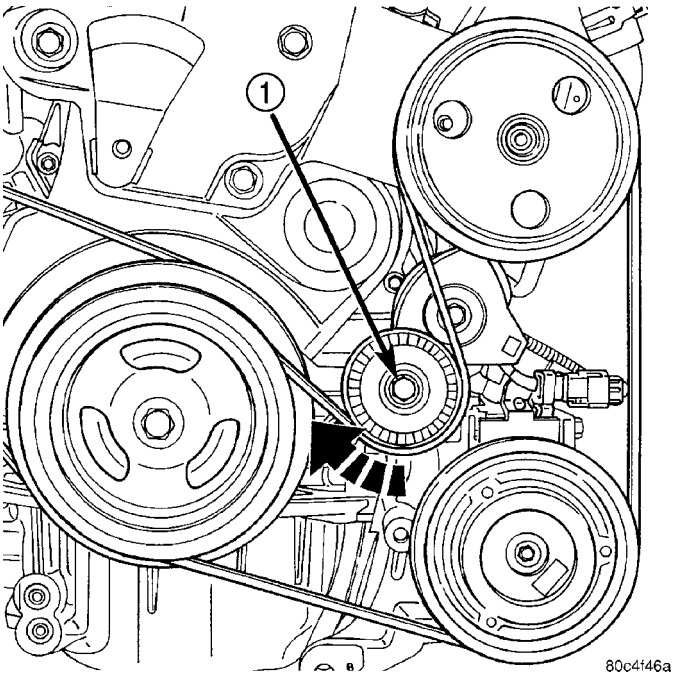

Fig. 3 Accessory Belt—Removing

1 - BOLT

CLEANING

Clean all foreign debris from belt pulley grooves. The belt pulleys must be free of oil, grease, and coolants before installing the drive belt.

INSPECTION

New developments in belt technology allow the belt to greatly increase its life expectancy. Unless the belt exhibits one of the following conditions do not replace the belt.

- Excessive wear
- Frayed cords
- Severe glazing

Poly-V Belt system may develop minor cracks across the ribbed side (due to reverse bending). These minor cracks are considered normal and acceptable. Parallel cracks are not (Fig. 6).

NOTE: Do not use any type of belt dressing or restorer on Poly-V Belts.

DRIVE BELTS (Continued)

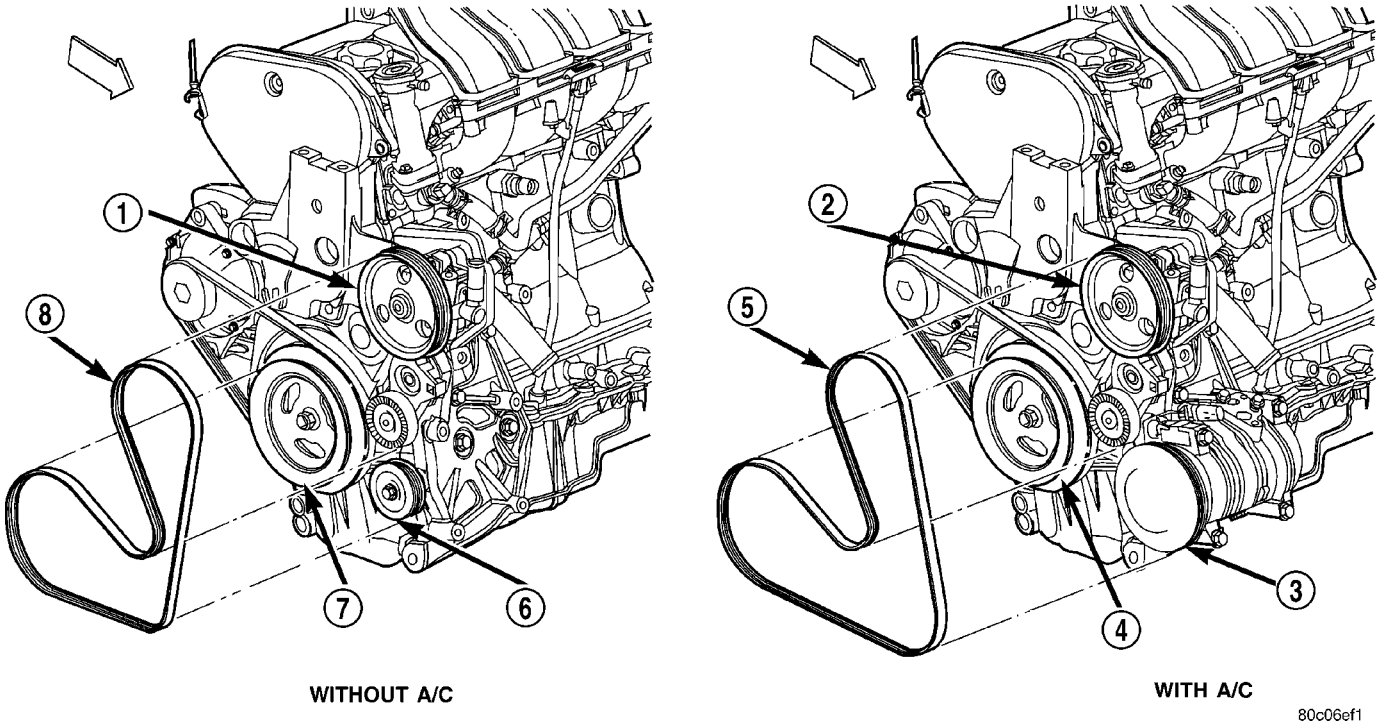

Fig. 4 Power Steering/Air Conditioning Belt

1 - POWER STEERING PUMP PULLEY
2 - POWER STEERING PUMP PULLEY
3 - AIR CONDITIONING COMPRESSOR PULLEY
4 - CRANKSHAFT PULLEY
5 - BELT
6 - IDLER PULLEY
7 - CRANKSHAFT PULLEY
8 - BELT

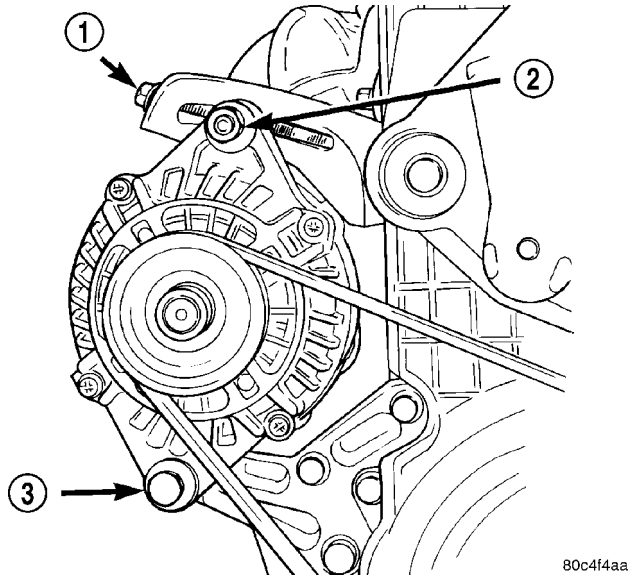

Fig. 5 Generator Belt

1 - ADJUSTING BOLT
2 - LOCKING NUT
3 - PIVOT BOLT

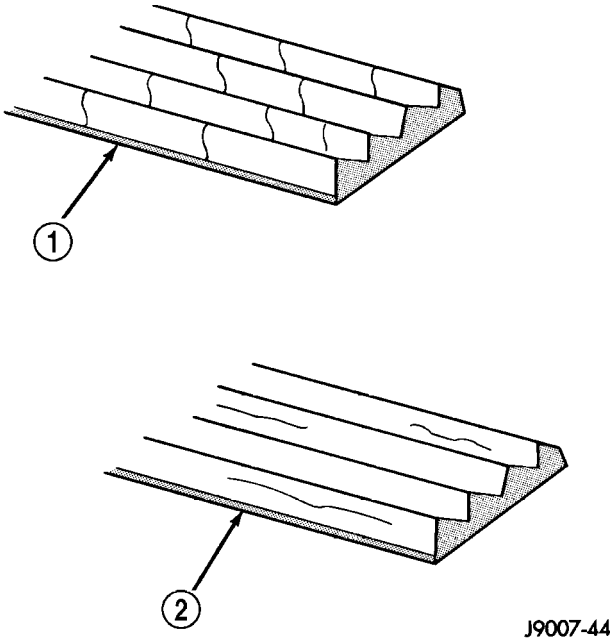

Fig. 6 Drive Belt Wear Pattern

1 - NORMAL CRACKS - BELT OK
2 - NOT NORMAL CRACKS - REPLACE BELT

DRIVE BELTS (Continued)

INSTALLATION

GENERATOR BELT

NOTE: When installing drive belt onto pulleys, make sure that belt is properly routed and all V-grooves make proper contact with pulley grooves.

(1) Install belt and/or adjust belt tension by tightening adjusting bolt. Adjust belt to specification shown in Belt Tension Chart.

(2) Check belt tension using Special Tool 8371 – Belt Tension Gauge Adapter, and the DRBIII® using the following procedures:

WARNING: DO NOT CHECK BELT TENSION WITH ENGINE RUNNING.

(a) Connect 8371 to the DRBIII® following the instructions provided in tool kit.

(b) Place end of microphone probe approximately 2.54 cm (1 in.) from belt at one of the belt center span locations shown in (Fig. 7).

(c) Pluck the belt a minimum of 3 times. (Use your finger or other suitable object)

(d) The frequency of the belt in hertz (Hz) will display on DRBIII® screen.

(e) Adjust belt to obtain proper frequency (tension). Refer to the belt tension chart for specifications.

(3) Tighten pivot bolt to 54 N·m (40 ft. lbs.) and locking nut to 54 N·m (40 ft. lbs.) (Fig. 5).

(4) Install power steering pump/air conditioning compressor drive belt.

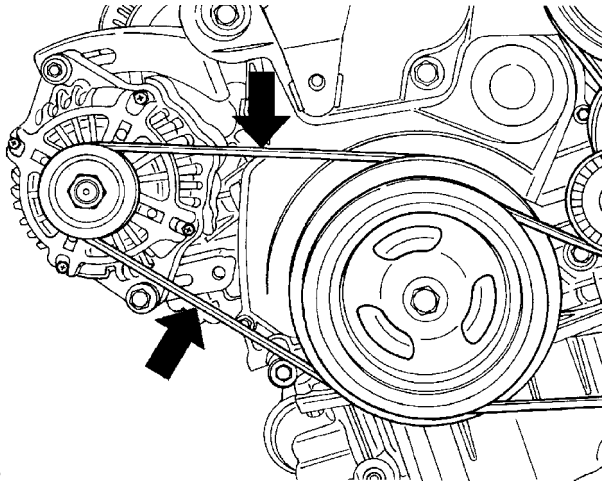

Fig. 7 Belt Center Span

BELT TENSION CHART

Accessory Drive Belt	Belt Tension	
Power Steering Pump and A/C Compressor	Dynamic Tensioner	
Generator	New 135 lb. Used 100 lb.	235-247 Hz 207-217 Hz

POWER STEERING PUMP/AIR CONDITIONING COMPRESSOR BELT

NOTE: When installing drive belt onto pulleys, make sure that belt is properly routed and all V-grooves make proper contact with pulley grooves.

(1) Install belt (Fig. 4) over all pulleys except for the power steering pump pulley.

(2) Using a wrench, rotate belt tensioner clockwise (Fig. 3) until belt can be installed onto power steering pump pulley. Release spring tension onto belt.

(3) After belt is installed, inspect belt length indicator marks (Fig. 8). The indicator mark should be within the minimum belt length and maximum belt length marks. On a new belt, the indicator mark should align approximately with the nominal belt length mark.

(4) Install belt splash shield (Fig. 2).

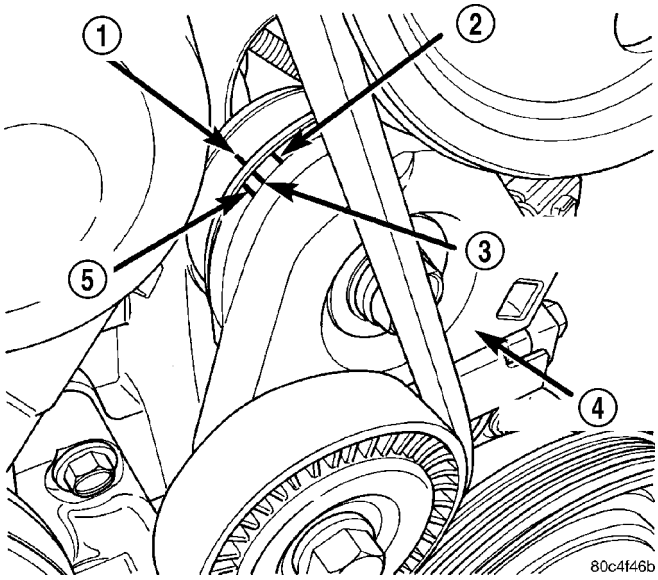

Fig. 8 Belt Length Indicator Marks

1 - BELT LENGTH INDICATOR
2 - MAXIMUM LENGTH
3 - NOMINAL LENGTH
4 - TENSIONER
5 - MINIMUM LENGTH

DRIVE BELTS (Continued)

ADJUSTMENTS

BELT TENSION

For belt tension adjustment procedure, (Refer to 7 - COOLING/ACCESSORY DRIVE/DRIVE BELTS - INSTALLATION).

AUTOMATIC BELT TENSIONER AND PULLEY

DESCRIPTION

The automatic belt tensioner (Fig. 9) maintains proper tension on the power steering and air conditioning belt. The tensioner pulley can be serviced separately.

NOTE: Tensioner arm should move freely and maintain 33–46 lb. tension on belt.

REMOVAL

(1) Remove power steering/air conditioning compressor belt (Refer to 7 - COOLING/ACCESSORY DRIVE/DRIVE BELTS - REMOVAL).

(2) Remove tensioner mounting bolt and remove tensioner assembly (Fig. 9).

(3) Remove tensioner pulley, if replacing the pulley.

INSTALLATION

(1) Install tensioner pulley and bolt, if removed. Tighten bolt to 27 N·m (20 ft. lbs.).

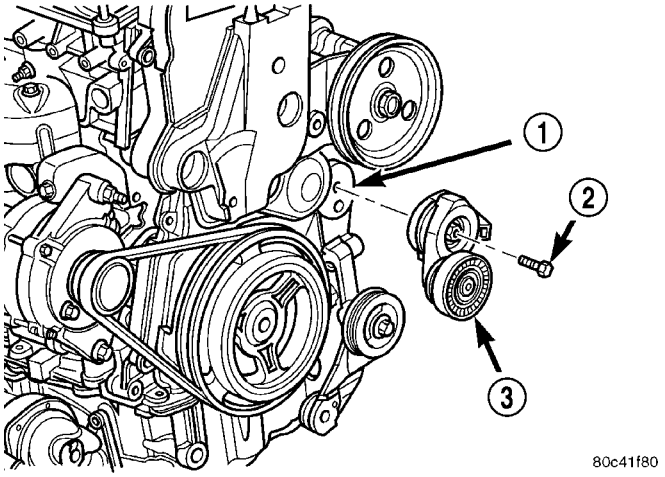

Fig. 9 Automatic Belt Tensioner

1 - TORQUE STRUT BRACKET
2 - BOLT
3 - AUTOMATIC BELT TENSIONER ASSEMBLY

(2) Install tensioner assembly to engine and tighten bolt to 54 N·m (40 ft. lbs.) (Fig. 9).

(3) Install power steering/air conditioning compressor belt (Refer to 7 - COOLING/ACCESSORY DRIVE/DRIVE BELTS - INSTALLATION).

NOTE: Tensioner arm should move freely and maintain 33–46 lb. tension on belt.

ENGINE - 1.6L SOHC

TABLE OF CONTENTS

page

ENGINE - 1.6L SOHC
DESCRIPTION 13
OPERATION 13
DIAGNOSIS AND TESTING
DIAGNOSIS AND TESTING - COOLING SYSTEM AERATION 14
DIAGNOSIS AND TESTING - COOLING SYSTEM DEAERATION 14
DIAGNOSIS AND TESTING - COOLING SYSTEM FLOW CHECK 14
DIAGNOSIS AND TESTING - COOLING SYSTEM LEAK TESTING 14
STANDARD PROCEDURE
STANDARD PROCEDURE - DRAINING COOLING SYSTEM 15
STANDARD PROCEDURE - FILLING COOLING SYSTEM 15
CLEANING 16
INSPECTION 16
COOLANT
DESCRIPTION 17
DIAGNOSIS AND TESTING - COOLANT CONCENTRATION TESTING 17
STANDARD PROCEDURE
STANDARD PROCEDURE - COOLANT SERVICE 17
STANDARD PROCEDURE - ROUTINE COOLANT LEVEL CHECK 17
STANDARD PROCEDURE - ADDING ADDITIONAL COOLANT 17
HOSE CLAMPS
DESCRIPTION - HOSE CLAMPS 18
COOLANT RECOVERY CONTAINER
DESCRIPTION 18
OPERATION 18
REMOVAL 18
INSTALLATION 18
ENGINE BLOCK HEATER
DESCRIPTION 19
OPERATION 19
DIAGNOSIS AND TESTING - ENGINE BLOCK HEATER TESTING 19
REMOVAL 19
INSTALLATION 19

page

ENGINE COOLANT TEMP SENSOR
DESCRIPTION 20
OPERATION 20
REMOVAL 20
INSTALLATION 20
ENGINE COOLANT THERMOSTAT AND HOUSING
REMOVAL 20
INSTALLATION 20
RADIATOR PRESSURE CAP
DESCRIPTION 21
OPERATION 21
DIAGNOSIS AND TESTING
DIAGNOSIS AND TESTING - COOLING SYSTEM PRESSURE CAP TESTING 21
DIAGNOSIS AND TESTING - COOLING SYSTEM PRESSURE RELIEF TESTING 22
CLEANING 22
INSPECTION 22
RADIATOR DRAINCOCK
REMOVAL 22
INSTALLATION 23
RADIATOR FAN
DESCRIPTION 23
OPERATION 23
DIAGNOSIS AND TESTING - RADIATOR FAN . . 24
REMOVAL 24
INSTALLATION 25
RADIATOR
REMOVAL 25
CLEANING 26
INSPECTION 26
INSTALLATION 26
HEATER RETURN TUBE
REMOVAL 27
INSTALLATION 27
WATER PUMP/POWER STEERING PUMP ASSEMBLY
DESCRIPTION 27
REMOVAL 28
DISASSEMBLY 28
ASSEMBLY 29
INSTALLATION 30

ENGINE - 1.6L SOHC

DESCRIPTION

The cooling system consists of an engine cooling module, thermostat, coolant, hoses, clamps, coolant recovery container, and a water pump to circulate the coolant. The engine cooling module may consist of a radiator, electric fan, radiator pressure cap, transmission oil cooler and lines (auto transmission equipped vehicles), and an air conditioning condenser (air conditioning equipped vehicles).

OPERATION

The primary purpose of a cooling system is to maintain engine temperature in a range that will provide satisfactory engine performance and emission levels under all expected driving conditions. It also provides hot water (coolant) for heater performance and cooling for automatic transmission oil. It does this by transferring heat from engine metal to coolant, moving this heated coolant to the radiator, and then transferring this heat to the ambient air.

The coolant flow circuit is shown in (Fig. 1).

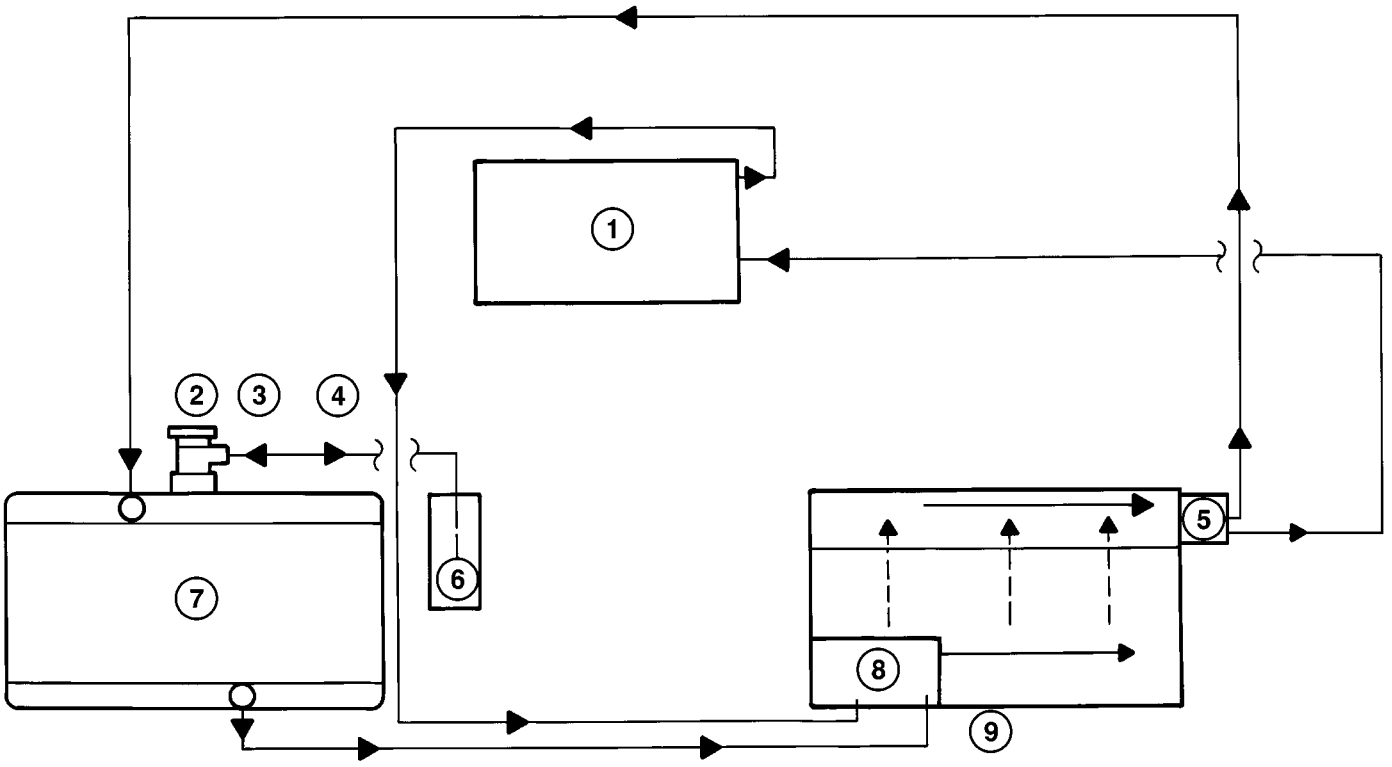

80c0e308

Fig. 1 Cooling System Operation

1 - HEATER CORE
2 - RADIATOR PRESSURE CAP
3 - COOL DOWN
4 - HEAT UP
5 - THERMOSTAT
6 - COOLANT RECOVERY CONTAINER
7 - RADIATOR
8 - WATER PUMP
9 - ENGINE

ENGINE - 1.6L SOHC (Continued)

DIAGNOSIS AND TESTING

DIAGNOSIS AND TESTING - COOLING SYSTEM AERATION

If coolant level drops below a certain point, aeration will occur drawing air into the water pump resulting in the following:

- High reading shown on the temperature gauge.
- Loss of coolant flow through the heater core.
- Corrosion in the cooling system.
- Transmission oil will become hotter (automatic transmission equipped vehicles).
- Water pump seal may run dry, increasing the risk of premature seal failure.
- Combustion gas leaks into the coolant can also cause the above problems.

DIAGNOSIS AND TESTING - COOLING SYSTEM DEAERATION

As air is removed from the cooling system, it gathers in the coolant recovery container. This pressure is released into the atmosphere through the pressure valve located in the radiator pressure cap when pressure reaches 96 - 124 kPa (14 - 18 psi). This air is replaced with coolant from the coolant recovery container.

NOTE: Deaeration does not occur at engine idle—higher engine speeds are required. Normal driving will deaerate cooling system.

To effectively deaerate the system, multiple thermal cycles of the system may be required.

DIAGNOSIS AND TESTING - COOLING SYSTEM FLOW CHECK

WARNING: DO NOT REMOVE THE COOLING SYSTEM PRESSURE CAP WITH THE SYSTEM HOT AND UNDER PRESSURE BECAUSE SERIOUS BURNS FROM COOLANT CAN OCCUR.

To determine whether coolant is flowing through the cooling system, use one of the following procedures:

- If engine is cold, idle engine until normal operating temperature is reached. Then feel the upper radiator hose. If it is hot, coolant is circulating.
- Remove pressure cap when engine is cold, remove small amount of coolant. Idle engine until thermostat opens, you should observe coolant flow while looking down the filler neck. Once flow is detected install the pressure cap.

DIAGNOSIS AND TESTING - COOLING SYSTEM LEAK TESTING

WARNING: IF VEHICLE HAS BEEN RUN RECENTLY, WAIT 15 MINUTES BEFORE REMOVING PRESSURE CAP. PLACE A SHOP TOWEL OVER THE CAP, AND WITHOUT PUSHING DOWN, ROTATE IT COUNTER-CLOCKWISE TO THE FIRST STOP. ALLOW FLUIDS TO ESCAPE THROUGH THE OVERFLOW TUBE. WHEN THE SYSTEM STOPS PUSHING COOLANT AND STEAM INTO THE COOLANT RECOVERY CONTAINER AND PRESSURE DROPS, PUSH DOWN ON THE CAP AND REMOVE IT COMPLETELY. SQUEEZING THE RADIATOR INLET HOSE WITH A SHOP TOWEL (TO CHECK PRESSURE) BEFORE AND AFTER TURNING TO THE FIRST STOP IS RECOMMENDED.

With engine not running, wipe the coolant filler neck sealing seat clean. The radiator should be full.

Attach a cooling system pressure tester (Tool 7700 or equivalent) to the coolant filler neck, as shown in (Fig. 2) and apply 104 kPa (15 psi) pressure. If the pressure drops more than 2 psi in 2 minutes inspect all points for external leaks.

All hoses, radiator and heater, should be moved while at 104 kPa (15 psi) since some leaks occur while driving due to engine movement, etc.

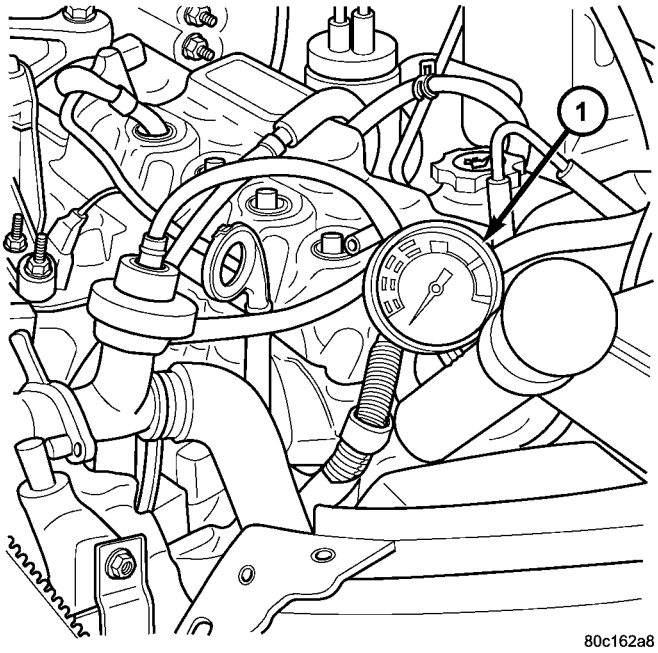

Fig. 2 Pressure Testing Cooling System

1 - PRESSURE TESTER

ENGINE - 1.6L SOHC (Continued)

If there are no external leaks after the gauge dial shows a drop in pressure, detach the tester. Start engine and run the engine to normal operating temperature in order to open the thermostat and allow the coolant to expand. Reattach the tester. If the needle on the dial fluctuates, it indicates a combustion leak and is usually a head gasket leak.

WARNING: WITH TOOL IN PLACE PRESSURE BUILDS UP FAST. ANY EXCESSIVE AMOUNT OF PRESSURE BUILT UP BY CONTINUOUS ENGINE OPERATION MUST BE RELEASED TO A SAFE PRESSURE POINT. NEVER PERMIT PRESSURE TO EXCEED 138 kPa (20 psi).

If the needle on the dial does not fluctuate, race the engine a few times. If an abnormal amount of coolant or steam is emitted from the tailpipe, it may indicate a faulty head gasket, cracked engine block or cylinder head.

There may be internal leaks which can be determined by removing the oil dipstick. If water globules appear intermixed with the oil, it will indicate a internal leak in the engine. If there is an internal leak, the engine must be disassembled for repair.

STANDARD PROCEDURE

STANDARD PROCEDURE - DRAINING COOLING SYSTEM

WARNING: DO NOT OPEN THE RADIATOR DRAINCOCK WITH THE SYSTEM HOT AND UNDER PRESSURE. SERIOUS BURNS FROM COOLANT CAN OCCUR.

NOTE: Drain, flush, and fill the cooling system at the mileage or time intervals specified in the MAINTENANCE SCHEDULE (Refer to LUBRICATION & MAINTENANCE/MAINTENANCE SCHEDULES - DESCRIPTION). If the solution is dirty, rusty, or contains a considerable amount of sediment; clean and flush with a reliable cooling system cleaner. Care should be taken in disposing of the used engine coolant from your vehicle. Check governmental regulations for disposal of used engine coolant.

(1) Position a clean collecting container under draincock location.

(2) Without removing the pressure cap and with system not under pressure, turn draincock counterclockwise to open (Fig. 3).

(3) The coolant reserve bottle should empty first, then remove the pressure cap.

(4) If coolant reserve bottle does not empty first:

(a) Check condition of the pressure cap and cap seals.

(b) Check for kinked/torn overflow hose from filler neck to reserve bottle.

(5) Allow cooling system to drain completely.

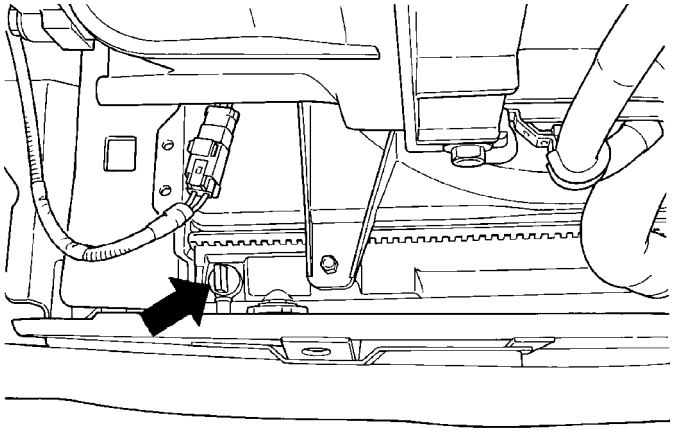

80c4b6c0

Fig. 3 Cooling System

STANDARD PROCEDURE - FILLING COOLING SYSTEM

WARNING: MAKE SURE ENGINE COOLING SYSTEM IS COOL BEFORE REMOVING PRESSURE CAP OR ANY HOSE. THE COOLING SYSTEM IS PRESSURIZED WHEN HOT. SEVERE PERSONAL INJURY MAY RESULT FROM ESCAPING HOT COOLANT.

CAUTION: Do not use well water, or suspect water supply in cooling system. A 50/50 mixture of the recommended ethylene glycol and distilled water is recommended. For recommended coolant usage, (Refer to LUBRICATION & MAINTENANCE/FLUID TYPES - DESCRIPTION).

NOTE: For cooling system capacity (Refer to LUBRICATION & MAINTENANCE/SPECIFICATIONS - FLUID CAPACITIES).

ENGINE - 1.6L SOHC (Continued)

(1) Close radiator draincock. **Hand tighten only.**

(2) Remove cooling system pressure cap. Install Special Tool 8195 Filling Aid Funnel (Fig. 4).

(3) Use the supplied clip to pinch overflow hose that connects between the radiator and the coolant recovery container (Fig. 4).

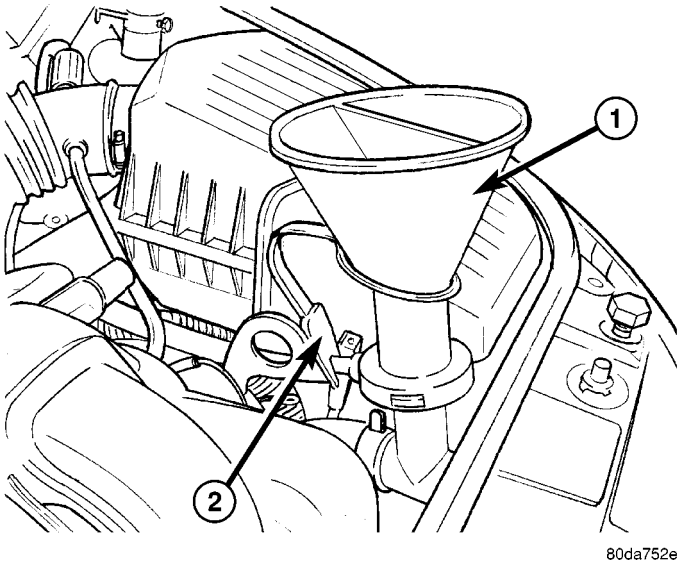

Fig. 4 Filling the Cooling System

1 - SPECIAL TOOL 8195 FILLING AID FUNNEL
2 - PINCH OVERFLOW HOSE

(4) Place a piece of clear 6.35 mm (0.250 in.) I.D. tubing 305 mm (12 in.) long over the cooling system bleed screw nipple. The cooling system bleed screw is located in the heater hose near the coolant recovery container (Fig. 5).

(5) Open, but do not remove, the cooling system bleed screw.

NOTE: While filling the cooling system, pour coolant into the larger section of the Filling Aid Funnel 8195.

(6) Slowly fill the cooling system until a small column of coolant begins to fill the clear plastic tube on the bleed screw.

(7) Close the cooling system bleed screw and remove the tubing.

(8) Remove clip from overflow hose and remove funnel 8195.

(9) Install cooling system pressure cap.

(10) Slowly fill the coolant recovery container to the FULL HOT mark with the recommended coolant. It may be necessary to add coolant to the recovery container after one warm-up/cool down cycle in order to maintain the coolant level between the FULL HOT and ADD marks. This is due to the removal of trapped air from the system.

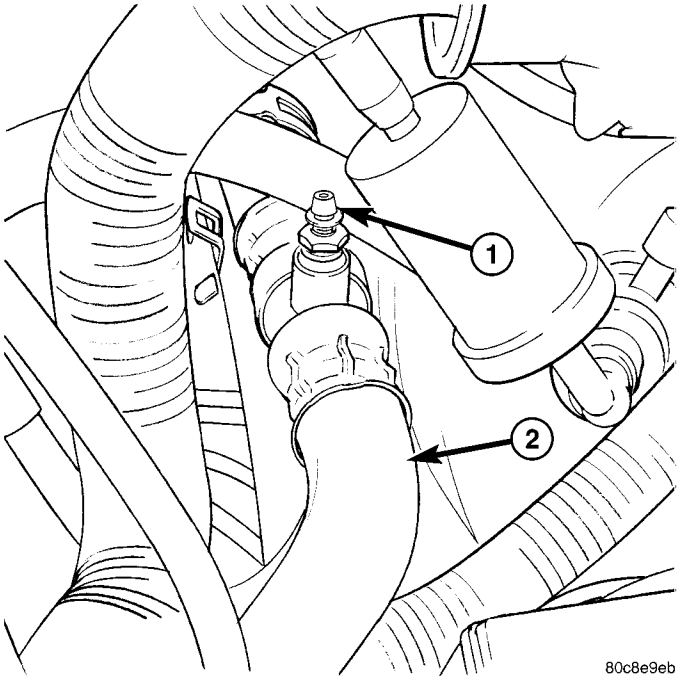

Fig. 5 Cooling System Bleed Screw

1 - COOLING SYSTEM BLEED SCREW
2 - HEATER HOSE

CLEANING

CAUTION: Internal radiator pressure must not exceed 138 kPa (20 psi) as damage to radiator may result.

Reverse flushing of cooling system is the forcing of water through the cooling system. This is done using air pressure in the opposite direction of normal coolant flow. It is usually only necessary with very dirty systems with evidence of partial plugging.

(1) Drain cooling system. Remove thermostat housing and thermostat. Install thermostat housing.

(2) Connect a suitable cooling system flusher and follow instructions supplied with flusher.

INSPECTION

After performing a cleaning/flush procedure, inspect all hoses, clamps and connections for deterioration and leaks. Inspect radiator and heater core for leaks.

COOLANT

DESCRIPTION

CAUTION: Use of Propylene Glycol based coolants is not recommended, as they provide less freeze protection and less corrosion protection. Do not mix coolant types. If coolant other than Mopar® Antifreeze/Coolant, 5 Year/100,000 Mile Formula or equivalent is added, the mixed coolant will have a reduced service schedule.

The use of aluminum cylinder heads, and water pumps requires special corrosion protection. Mopar® Antifreeze/Coolant, 5 Year/100,000 Mile Formula or equivalent ethylene glycol based coolant with corrosion inhibitors (called HOAT, for Hybrid Organic Additive Technology) is recommended. This coolant offers the best engine cooling without corrosion when mixed with 50% Ethylene Glycol and 50% distilled water to obtain a freeze point of -37°C (-35°F). If it loses color or becomes contaminated, drain, flush, and replace with fresh properly mixed coolant solution. Mixing of coolants other than specified (non-HOAT), will reduce the 5 year/100,000 mile corrosion protection.

DIAGNOSIS AND TESTING - COOLANT CONCENTRATION TESTING

Coolant concentration should be checked when any additional coolant was added to system or after a coolant drain, flush and refill. The coolant mixture offers optimum engine cooling and protection against corrosion when mixed to a freeze point of -37°C (-34°F) to -46°C (-50°F). The use of a hydrometer or a refractometer can be used to test coolant concentration.

A hydrometer will test the amount of glycol in a mixture by measuring the specific gravity of the mixture. The higher the concentration of ethylene glycol, the larger the number of balls that will float, and higher the freeze protection (up to a maximum of 60% by volume glycol).

A refractometer (Special Tool 8286)(Refer to 7 - COOLING - SPECIAL TOOLS) will test the amount of glycol in a coolant mixture by measuring the amount a beam of light bends as it passes through the fluid.

Some coolant manufactures use other types of glycols into their coolant formulations. Propylene glycol is the most common new coolant. However, propylene glycol based coolants do not provide the same freezing protection and corrosion protection and is not recommended.

CAUTION: Do not mix types of coolant—corrosion protection will be severely reduced.

STANDARD PROCEDURE

STANDARD PROCEDURE - COOLANT SERVICE

For engine coolant recommended service schedule, (Refer to LUBRICATION & MAINTENANCE/MAINTENANCE SCHEDULES - DESCRIPTION).

STANDARD PROCEDURE - ROUTINE COOLANT LEVEL CHECK

NOTE: Do not remove pressure cap for routine coolant level inspections.

The coolant recovery/reserve system provides a quick visual method for determining the coolant level without removing the radiator cap. Simply observe, with the engine idling and warmed up to normal operating temperature, that the level of the coolant in the recovery/reserve container is between the FULL HOT and ADD marks (Fig. 6).

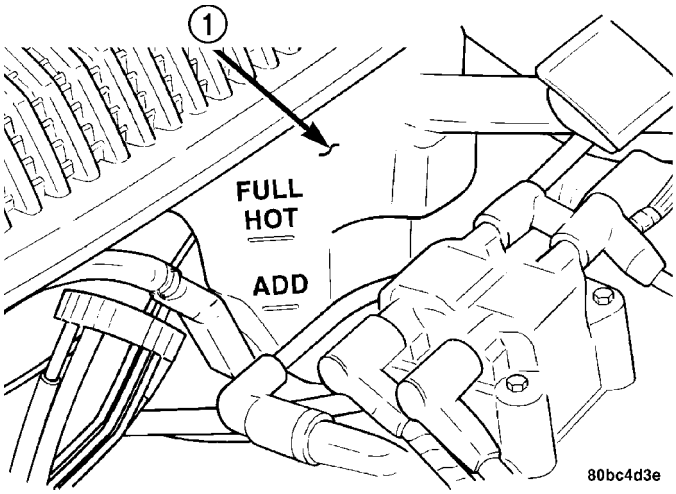

Fig. 6 Coolant Level

1 - COOLANT RECOVERY CONTAINER

STANDARD PROCEDURE - ADDING ADDITIONAL COOLANT

NOTE: The radiator cap should not be removed.

NOTE: If the cooling system is completely empty, (Refer to 7 - COOLING/ENGINE - STANDARD PROCEDURE - FILLING COOLING SYSTEM).

When additional coolant is needed, it should be added to the coolant recovery container. Use only a 50/50 concentration of the recommended ethylene glycol type antifreeze and distilled water. (Refer to LUBRICATION & MAINTENANCE/FLUID TYPES - DESCRIPTION).

HOSE CLAMPS

DESCRIPTION - HOSE CLAMPS

The cooling system uses spring type hose clamps. If a spring type clamp replacement is necessary, replace with the original Mopar® equipment spring type clamp.

CAUTION: A number or letter is stamped into the tongue of constant tension clamps. If replacement is necessary, use only a original equipment clamp with matching number or letter (Fig. 7).

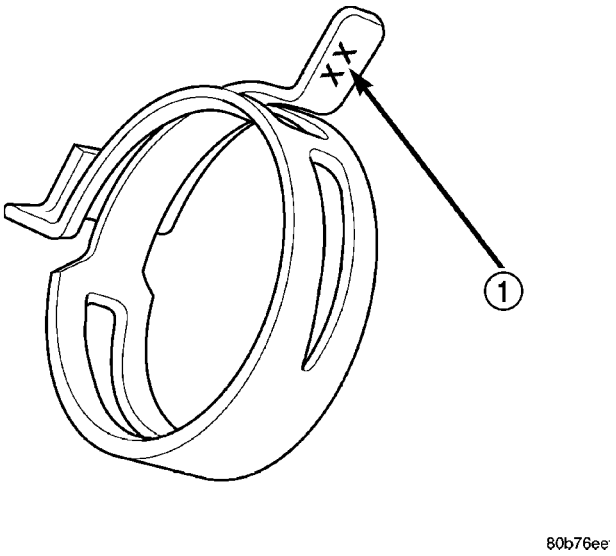

Fig. 7 Spring Clamp Size Location

1 - SPRING CLAMP SIZE LOCATION

The spring type hose clamp applies constant tension on a hose connection. To remove a spring type hose clamp, use Special Tool 6094 or 8495 (or equivalent), constant tension clamp pliers (Fig. 8) to compress the hose clamp.

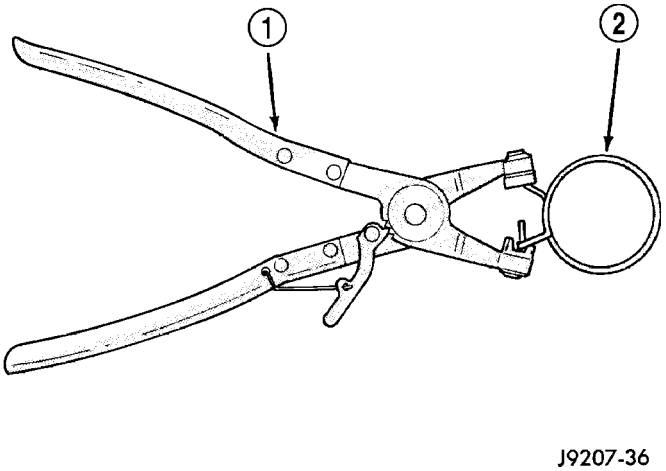

Fig. 8 Hose Clamp Tool

1 - HOSE CLAMP TOOL 6094
2 - HOSE CLAMP

COOLANT RECOVERY CONTAINER

DESCRIPTION

The coolant recovery system consists of a coolant recovery container mounted to the dash panel, a vent hose for the coolant recovery container, a hose connecting the container to the radiator neck, and a pressure cap (Fig. 9) and (Fig. 10).

OPERATION

The system works in conjunction with the cooling system pressure cap to utilize thermal expansion and contraction of the coolant to keep the coolant free of trapped air. The system provides space for expansion and contraction. Also, the system provides a convenient and safe method for checking and adjusting the coolant level at atmospheric pressure without removing the pressure cap. It also provides some reserve coolant to compensate for minor leaks and evaporation or boiling losses.

REMOVAL

(1) Siphon coolant from coolant recovery container.
(2) Remove vent hose clip from stud on dash panel (Fig. 9).
(3) Disconnect overflow hose at radiator neck (Fig. 10).
(4) Remove container attaching fasteners (Fig. 9).
(5) Remove coolant recovery container.

INSTALLATION

(1) Install coolant recovery container and tighten fasteners to 4 N·m (35 in. lbs.) (Fig. 9).
(2) To ensure proper vent hose routing, install vent hose clip on stud at dash panel (Fig. 9).
(3) Connect overflow hose at radiator neck (Fig. 10).
(4) Fill coolant recovery container to proper level.

COOLANT RECOVERY CONTAINER (Continued)

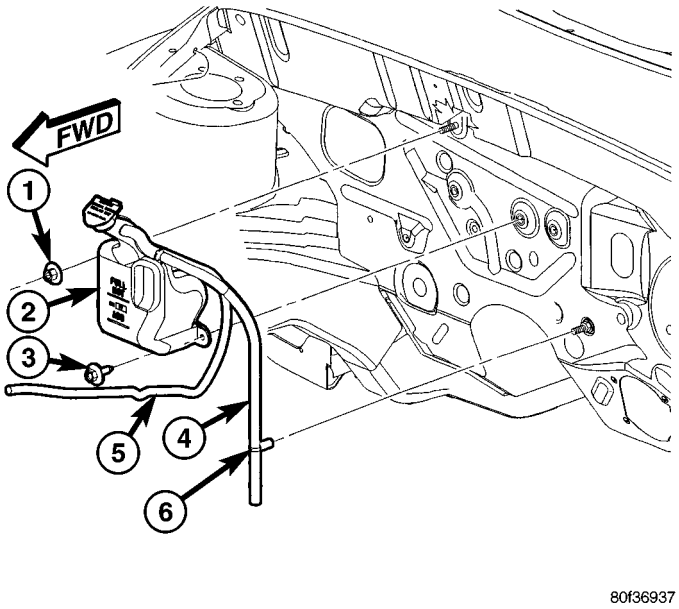

Fig. 9 Coolant Recovery Container

1 - NUT
2 - COOLANT RECOVERY CONTAINER
3 - SCREW
4 - VENT HOSE
5 - OVERFLOW HOSE
6 - CLIP

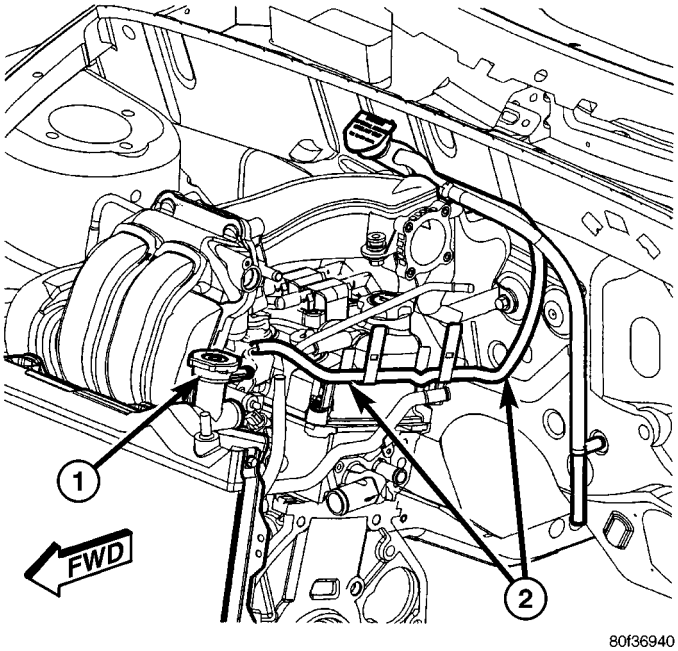

Fig. 10 Overflow Hose Routing

1 - RADIATOR NECK
2 - OVERFLOW HOSE

ENGINE BLOCK HEATER

DESCRIPTION

The heater is mounted in a core hole (in place of a core hole plug) in the engine block near the starter mounting location. The heating element immersed in coolant (Fig. 11). The engine block heater is available as an optional accessory. The heater is operated by ordinary house current (110 Volt A.C.) through a power cord and connector behind the radiator grille.

CAUTION: The power cord must be secured in its retainer clips, and not positioned so it could contact linkages or exhaust manifolds and become damaged.

OPERATION

The block heater element is submerged in the cooling system's coolant. When electrical power (110 volt A.C.) is applied to the element, it creates heat. This heat is transferred to the engine coolant. This provides easier engine starting and faster warm-up when vehicle is operated in areas having extremely low temperatures.

DIAGNOSIS AND TESTING - ENGINE BLOCK HEATER TESTING

If unit does not operate, trouble can be in either the power cord or the heater element. Test power cord for continuity with a 110-volt voltmeter or 110-volt test light; test heater element continuity with an ohmmeter or 12-volt test light.

REMOVAL

(1) Drain the cooling system (Refer to 7 - COOLING/ENGINE - STANDARD PROCEDURE).
(2) Raise vehicle on hoist.
(3) Detach power cord plug from heater.
(4) Loosen screw in center of heater. Remove heater assembly (Fig. 11).

INSTALLATION

(1) Thoroughly clean core hole and heater seat.
(2) Insert heater assembly with element loop positioned **upward (Fig. 11)**.
(3) With heater seated, tighten center screw securely to assure a positive seal.
(4) Connect power cord to block heater.
(5) Lower vehicle.
(6) Fill the cooling system (Refer to 7 - COOLING/ENGINE - STANDARD PROCEDURE).

ENGINE BLOCK HEATER (Continued)

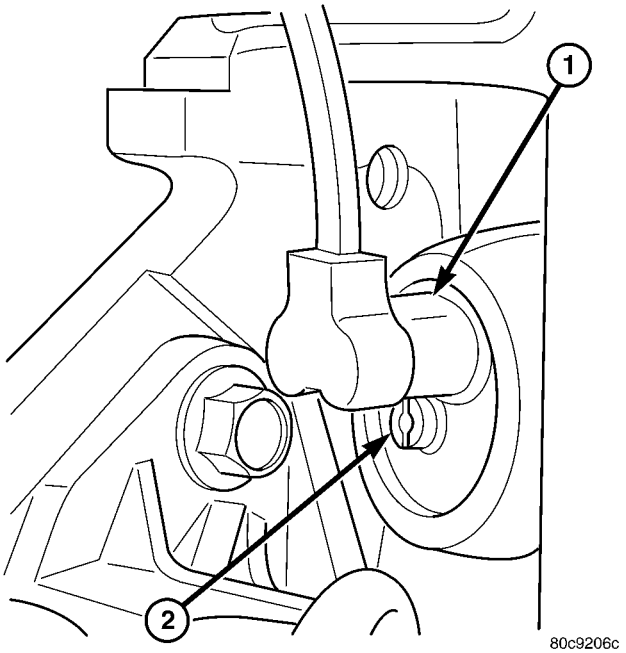

Fig. 11 Engine Block Heater

1 - BLOCK HEATER
2 - SCREW

ENGINE COOLANT TEMP SENSOR

DESCRIPTION

The engine coolant temperature (ECT) sensor threads into the rear of the cylinder head, below the thermostat housing (Fig. 12). New sensors have sealant applied to the threads. The ECT Sensor is a Negative Thermal Coefficient (NTC) sensor.

OPERATION

The ECT sensor provides an input to the PCM. As temperature increases, resistance of the sensor decreases. As coolant temperature varies, the ECT sensor resistance changes resulting in a different voltage value at the PCM ECT sensor signal circuit. The ECT sensor provides input for various PCM operations. The PCM uses the input to control air-fuel mixture, timing, and radiator fan on/off times. The ECT sensor input is also used for temperature gauge operation.

REMOVAL

(1) Disconnect negative battery cable.
(2) Disconnect positive battery cable.
(3) Remove battery.
(4) Partially drain cooling system.
(5) Disconnect coolant temperature sensor electrical connector.
(6) Remove coolant temperature sensor (Fig. 12).

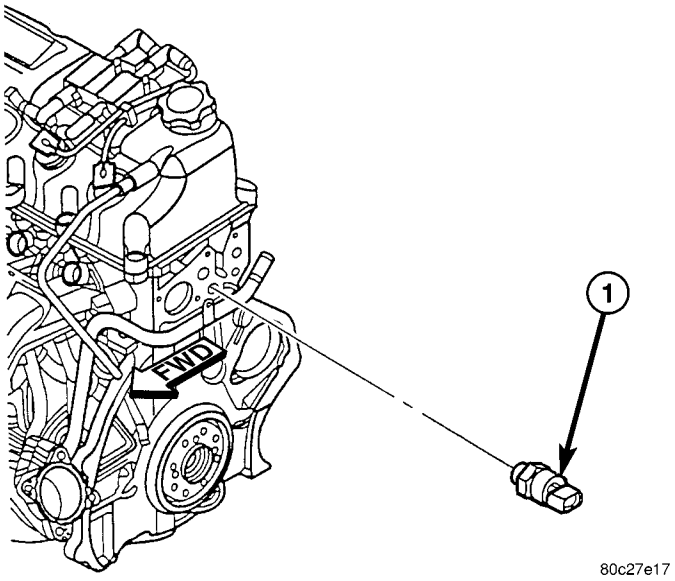

Fig. 12 Engine Coolant Temperature Sensor

1 - ENGINE COOLANT TEMPERATURE SENSOR

INSTALLATION

(1) Install coolant temperature sensor (Fig. 12). Tighten sensor to 17 N·m (150 in. lbs.).
(2) Reconnect coolant temperature sensor connector.
(3) Install battery.
(4) Connect positive battery cable.
(5) Connect negative battery cable.
(6) Fill cooling system (Refer to 7 - COOLING/ENGINE - STANDARD PROCEDURE).

ENGINE COOLANT THERMOSTAT AND HOUSING

REMOVAL

(1) Disconnect negative battery cable.
(2) Disconnect positive battery cable.
(3) Remove battery.
(4) Partially drain cooling system.
(5) Remove fasteners securing heater return tube to engine block and thermostat housing. Reposition heater tube.
(6) Disconnect upper radiator hose and heater hose from thermostat housing.
(7) Remove thermostat housing fasteners (Fig. 13).

INSTALLATION

(1) Clean all sealing surfaces.
(2) Place thermostat and seal into thermostat housing. Align air bleed with notch in thermostat housing (Fig. 14).

ENGINE COOLANT THERMOSTAT AND HOUSING (Continued)

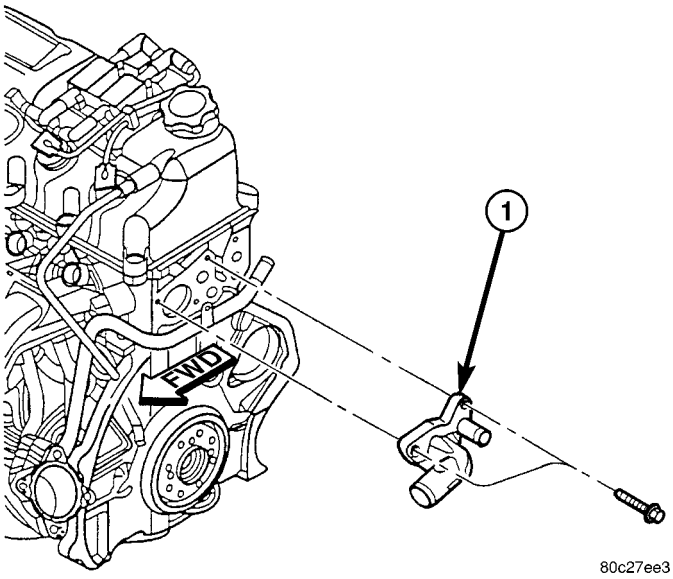

Fig. 13 Engine Coolant Thermostat Housing

1 - ENGINE COOLANT THERMOSTAT HOUSING

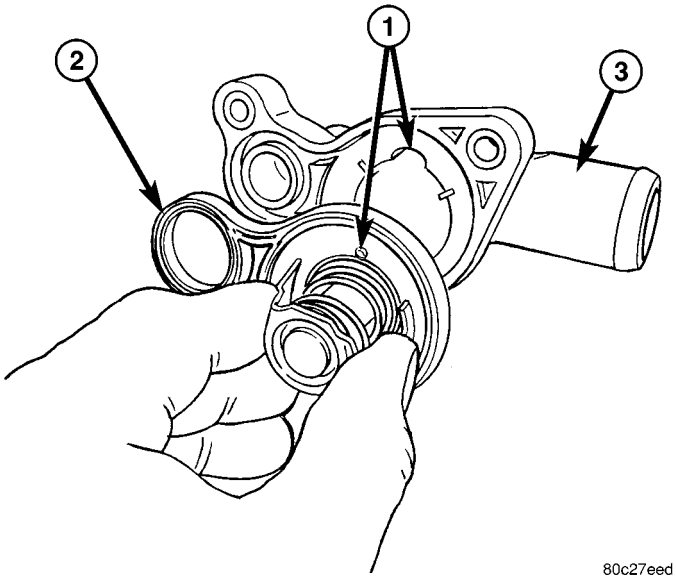

Fig. 14 Thermostat Orientation

1 - ALIGN AIR BLEED WITH NOTCH IN THERMOSTAT HOUSING
2 - THERMOSTAT SEAL
3 - THERMOSTAT HOUSING

(3) Install thermostat housing and fasteners. Torque fasteners to 7 N·m (65 in. lbs.) (Fig. 13).

(4) Connect upper radiator hose and heater hose to thermostat housing.

(5) Install fasteners securing heater return tube to engine block and thermostat housing.

(6) Install battery.

(7) Connect positive battery cable.

(8) Connect negative battery cable.

(9) Fill cooling system (Refer to 7 - COOLING/ENGINE - STANDARD PROCEDURE).

RADIATOR PRESSURE CAP

DESCRIPTION

The cooling system is equipped with a pressure cap that releases built up pressure, maintaining a range of 97-124 kPa (14-18 psi).

There is also a vent valve in the center of the cap. This valve also opens when coolant is cooling and contracting, allowing coolant to return to radiator from coolant recovery container by vacuum through connecting hose. **If valve is stuck shut, the radiator hoses will be collapsed on cool down. Clean the vent valve (Fig. 15) to ensure proper sealing when boiling point is reached.**

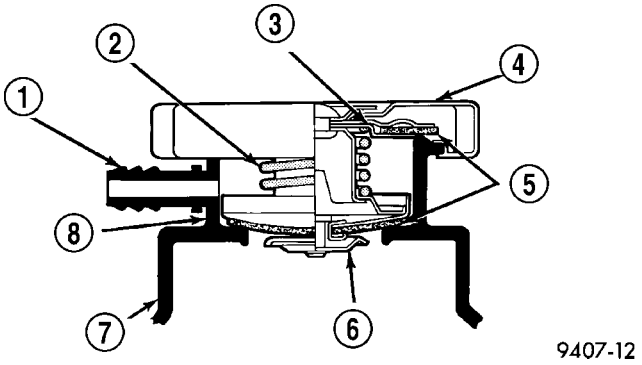

Fig. 15 Cooling System Pressure Cap

1 - OVERFLOW NIPPLE
2 - MAIN SPRING
3 - GASKET RETAINER
4 - STAINLESS-STEEL SWIVEL TOP
5 - RUBBER SEALS
6 - VENT VALVE
7 - RADIATOR
8 - FILLER NECK

OPERATION

The pressure cap allows the cooling system to operate at higher than atmospheric pressure. The higher pressure raises the coolant boiling point; this allows increased radiator cooling capacity.

The gasket in the cap seals the filler neck, so that vacuum can be maintained, allowing coolant to be drawn back into the radiator from the reserve container.

DIAGNOSIS AND TESTING

DIAGNOSIS AND TESTING - COOLING SYSTEM PRESSURE CAP TESTING

Dip the pressure cap in water. Clean any deposits off the vent valve or its seat and apply cap to end of the Pressure Cap Test Adaptor that is included with the Cooling System Tester 7700. Working the plunger, bring the pressure to 104 kPa (15 psi) on the gauge. If the pressure cap fails to hold pressure of at least 97 kPa (14 psi), replace the pressure cap.

RADIATOR PRESSURE CAP (Continued)

CAUTION: The Cooling System Tester Tool is very sensitive to small air leaks that will not cause cooling system problems. A pressure cap that does not have a history of coolant loss should not be replaced just because it leaks slowly when tested with this tool. Add water to the tool. Turn tool upside down and recheck pressure cap to confirm that cap is bad.

If the pressure cap tests properly while positioned on Cooling System Tester (Fig. 16), but will not hold pressure or vacuum when positioned on the filler neck. Inspect the filler neck and cap top gasket for irregularities that may prevent the cap from sealing properly.

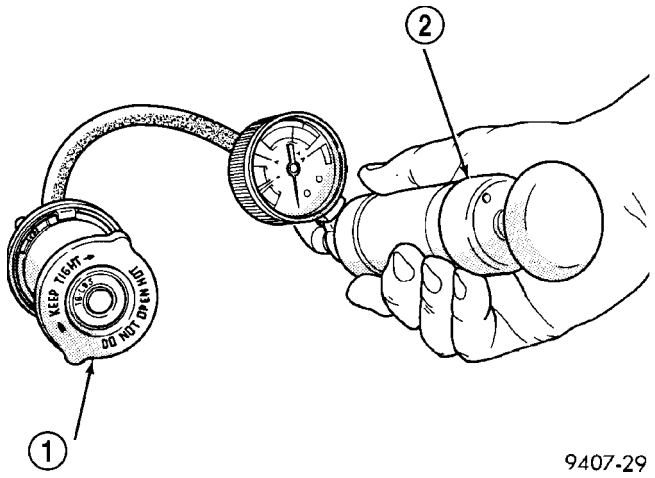

Fig. 16 Pressure Testing Radiator Cap

1 - PRESSURE CAP
2 - PRESSURE TESTER

DIAGNOSIS AND TESTING - COOLING SYSTEM PRESSURE RELIEF TESTING

WARNING: IF VEHICLE HAS BEEN RUN RECENTLY, WAIT 15 MINUTES BEFORE REMOVING CAP. PLACE A SHOP TOWEL OVER THE CAP, AND WITHOUT PUSHING DOWN, ROTATE IT COUNTERCLOCKWISE TO THE FIRST STOP. ALLOW FLUIDS TO ESCAPE THROUGH THE OVERFLOW TUBE. WHEN THE SYSTEM STOPS PUSHING COOLANT AND STEAM INTO THE COOLANT RECOVERY CONTAINER AND PRESSURE DROPS, PUSH DOWN ON THE CAP AND REMOVE IT COMPLETELY. SQUEEZING THE RADIATOR INLET HOSE WITH A SHOP TOWEL (TO CHECK PRESSURE) BEFORE AND AFTER TURNING TO THE FIRST STOP IS RECOMMENDED.

WARNING: THE WARNING WORDS "DO NOT OPEN HOT" ON THE PRESSURE CAP IS A SAFETY PRECAUTION. WHEN HOT, THE COOLING SYSTEM BUILDS UP PRESSURE. TO PREVENT SCALDING OR OTHER INJURY, THE PRESSURE CAP SHOULD NOT BE REMOVED WHILE THE SYSTEM IS HOT AND/OR UNDER PRESSURE.

The pressure cap upper gasket to filler neck seal can be checked by removing the overflow hose at the radiator filler neck overflow nipple (Fig. 15). Attach the radiator pressure tester to the **filler neck overflow nipple,** and pump air into the system. The pressure cap upper gasket should relieve pressure at 69-124 kPa (10-18 psi), and hold pressure at 55 kPa (8 psi) minimum.

There is no need to remove the pressure cap at any time **except** for the following purposes:

- Check and adjust coolant freeze point
- Refill system with new coolant
- Conducting service procedures
- Checking for leaks

CLEANING

Use only a mild soap to clean the pressure cap.

INSPECTION

Hold the cap in your hand, **top side up** (Fig. 15). The vent valve at the bottom of the cap should open. If the rubber gasket has swollen, preventing the valve from opening, replace the cap.

Hold the cleaned cap in your hand, **upside down.** If any light can be seen between vent valve and the rubber gasket, replace the cap. **Do not use a replacement cap that has a spring to hold the vent shut.**

A replacement cap must be of the type designed for coolant reserve systems. This design ensures coolant return to the radiator.

RADIATOR DRAINCOCK

REMOVAL

CAUTION: Use of pliers on draincock is not recommended. Damage may occur to radiator or draincock.

NOTE: It is not necessary to remove draincock during a routine coolant drain.

(1) Drain the cooling system (Refer to 7 - COOLING/ENGINE - STANDARD PROCEDURE).

(2) Open the draincock by turning it counterclockwise until it stops.

(3) Turn the draincock back (clockwise) 1/8 turn.

(4) Pull the draincock (Fig. 17) from the radiator tank.

RADIATOR DRAINCOCK (Continued)

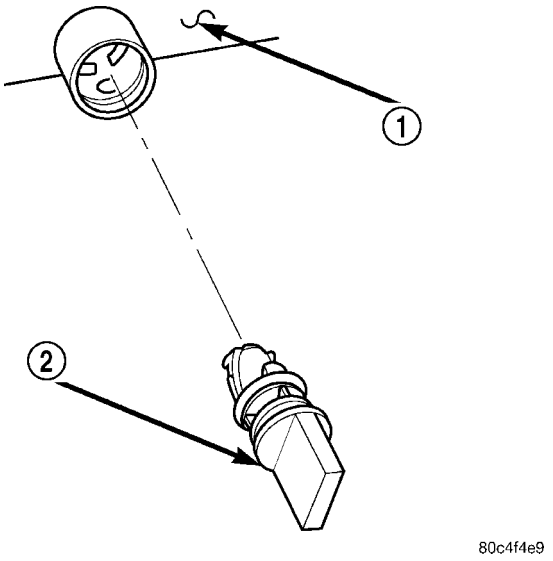

Fig. 17 Draincock

1 - RADIATOR TANK
2 - DRAINCOCK

INSTALLATION

(1) Align draincock stem to radiator tank opening.
(2) Push draincock into the radiator tank opening.
(3) Tighten the draincock by turning clockwise until it stops.
(4) Fill the cooling system (Refer to 7 - COOLING/ ENGINE - STANDARD PROCEDURE).

RADIATOR FAN

DESCRIPTION

The radiator cooling fan is a dual-speed electric motor driven fan. The radiator fan assembly includes an electric motor, fan blade, and a support shroud that is attached to the radiator (Fig. 18). The radiator fan is serviced as an assembly.

OPERATION

Radiator fan operation is control by the Powertrain Control Module (PCM) with inputs from the temperature of the coolant, which is sensed by the coolant temperature sensor, and vehicle speed which is measured by the vehicle speed sensor. The PCM turns on the fan through either the high or low speed fan relay. The PCM provides a ground to the relay's control circuit. The fan relays are located in the Power Distribution Center (PDC) (Fig. 19). Refer to the label beneath the PDC cover for location of fan relays.

Refer to **Radiator Fan Operation Chart** for fan operation specifications. For fan circuit wiring diagrams, refer to WIRING DIAGRAMS.

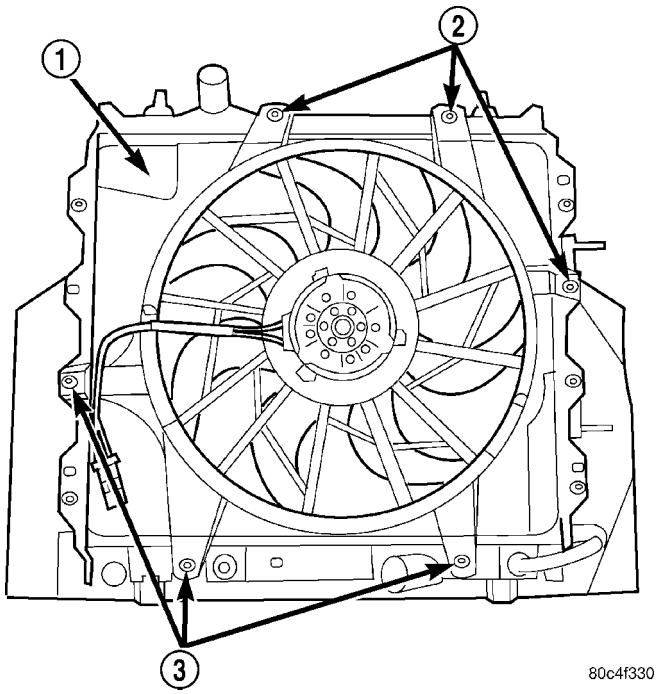

Fig. 18 Radiator Fan

1 - RADIATOR FAN SHROUD
2 - SCREWS
3 - SCREWS

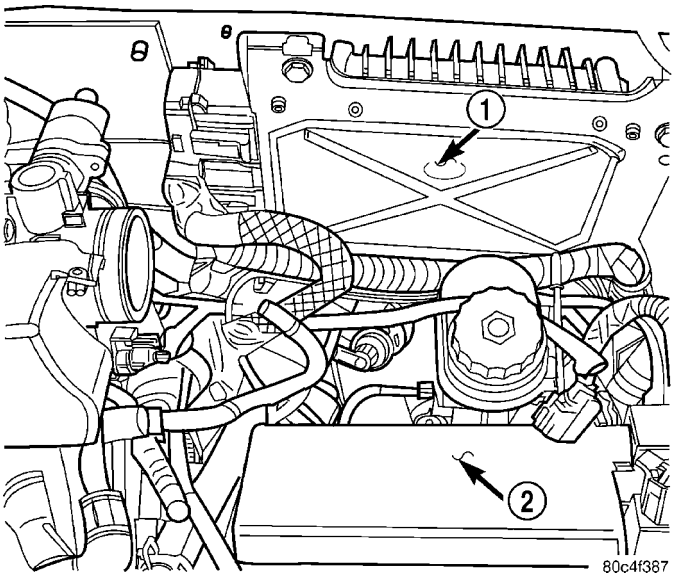

Fig. 19 Power Distribution Center (PDC)

1 - PCM
2 - PDC

If the cooling fan is inoperative or a Diagnostic Trouble Code (DTC) related to fan control has been set, refer to the appropriate Powertrain Diagnostic Information for diagnostic procedures.

RADIATOR FAN (Continued)

RADIATOR FAN OPERATION CHART

Radiator Fan Control		
	Low Speed	**High Speed**
A/C Off *–vehicle speed < 70.8 km/h (44 mph)*		
Fan On:	96.6° C (206° F)	103° C (219° F)
Fan Off:	92.7° C (199° F)	98.8° C (210° F)
A/C Off *–vehicle speed > 70.8 km/h (44 mph) (until vehicle speed drops below 58 km/h (36 mph)*		
Fan On:	Off	103° C (219° F)
Fan Off:		98.8° C (210° F)
A/C On *–any vehicle speed*		
Fan On:	Off	82.2° C (180° F)
Fan Off:		80° C (176° F)

DIAGNOSIS AND TESTING - RADIATOR FAN

(Refer to Appropriate Diagnostic Information)

REMOVAL

NOTE: The fan motor, fan, and the shroud are serviced as an assembly.

WARNING: DO NOT REMOVE THE CYLINDER BLOCK PLUG OR THE RADIATOR DRAINCOCK WITH THE SYSTEM HOT AND UNDER PRESSURE BECAUSE SERIOUS BURNS FROM COOLANT CAN OCCUR.

(1) Disconnect negative cable from battery.

(2) Partially drain cooling system below upper radiator hose level (Refer to 7 - COOLING/ENGINE - STANDARD PROCEDURE).

(3) Remove grille (Refer to 23 - BODY/EXTERIOR/ GRILLE - REMOVAL).

(4) Remove upper radiator closure panel (Refer to 23 - BODY/EXTERIOR/RADIATOR CLOSURE PANEL - REMOVAL) (Fig. 20).

(5) Disconnect upper radiator hose and overflow hose from radiator filler neck (Fig. 21).

(6) Remove radiator filler neck (Fig. 21).

(7) Raise vehicle on hoist.

(8) Disconnect radiator fan electrical connector.

(9) Remove the two lower and left side radiator fan screws (Fig. 18).

(10) Lower vehicle and remove the remaining radiator fan attaching screws (Fig. 18).

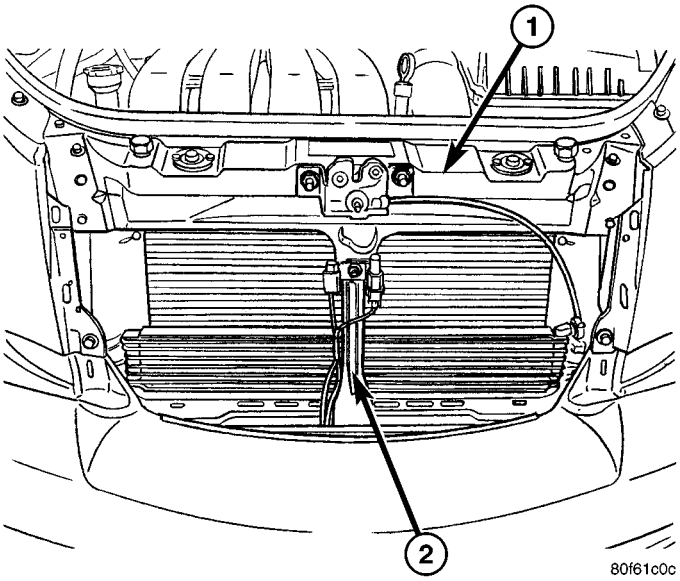

Fig. 20 Upper Radiator Closure Panel and Center Brace

1 - UPPER RADIATOR CLOSURE PANEL
2 - CENTER BRACE

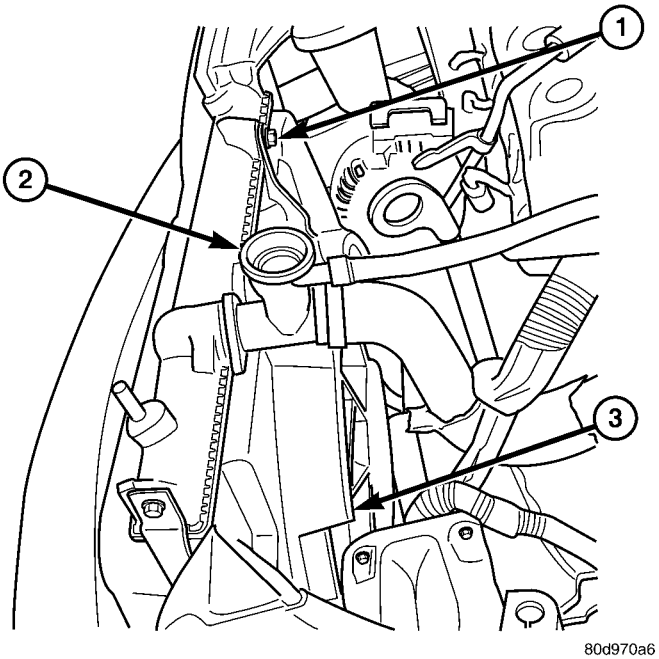

Fig. 21 Radiator Filler Neck

1 - FAN MOUNTING NUT
2 - RADIATOR FILLER NECK
3 - FAN

CAUTION: Care should be taken not to damage the radiator cooling fins and tubes during fan removal.

(11) Remove radiator fan by lifting up from the engine compartment.

RADIATOR FAN (Continued)

INSTALLATION

(1) Install the radiator fan into position on the radiator.

(2) Install the upper and right side radiator fan retaining screws and tighten to 6 N·m (55 in. lbs.) (Fig. 18).

(3) Raise vehicle and install the remaining fan attaching screws. Tighten to 6 N·m (55 in. lbs.) (Fig. 18).

(4) Connect radiator fan electrical connector.

(5) Lower vehicle.

(6) Install radiator filler neck to radiator. Connect upper radiator hose and overflow hose to radiator filler neck (Fig. 21).

(7) Install upper radiator closure panel (Refer to 23 - BODY/EXTERIOR/RADIATOR CLOSURE PANEL - INSTALLATION) (Fig. 20).

(8) Install grille (Refer to 23 - BODY/EXTERIOR/GRILLE - INSTALLATION).

(9) Connect negative battery cable.

(10) Fill the cooling system (Refer to 7 - COOLING/ENGINE - STANDARD PROCEDURE).

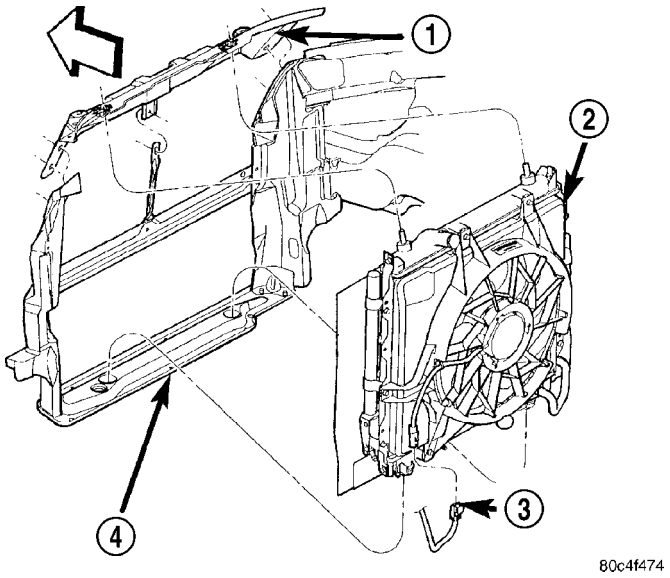

Fig. 22 Cooling Module

1 - UPPER RADIATOR CROSSMEMBER
2 - COOLING MODULE
3 - RADIATOR FAN CONNECTOR
4 - LOWER RADIATOR CROSSMEMBER

RADIATOR

REMOVAL

WARNING: DO NOT REMOVE THE CYLINDER BLOCK PLUG OR THE RADIATOR DRAINCOCK WITH THE SYSTEM HOT AND UNDER PRESSURE BECAUSE SERIOUS BURNS FROM COOLANT CAN OCCUR.

NOTE: It is not necessary to discharge the air conditioning system to remove the radiator.

(1) Disconnect negative cable from battery.

(2) Raise vehicle on hoist.

(3) Drain the cooling system (Refer to 7 - COOLING/ENGINE - STANDARD PROCEDURE).

(4) Disconnect radiator fan motor electrical connector (Fig. 22).

(5) Disconnect lower radiator hose.

(6) Remove two lower fasteners attaching radiator fan shroud to radiator (Fig. 23).

(7) Dislodge lower radiator air seal from side radiator air seals (Fig. 24).

(8) Lower vehicle.

(9) Remove grille (Refer to 23 - BODY/EXTERIOR/GRILLE - REMOVAL).

(10) Remove upper radiator closure panel (Refer to 23 - BODY/EXTERIOR/RADIATOR CLOSURE PANEL - REMOVAL).

(11) Disconnect upper radiator hose and overflow hose from the radiator filler neck (Fig. 25).

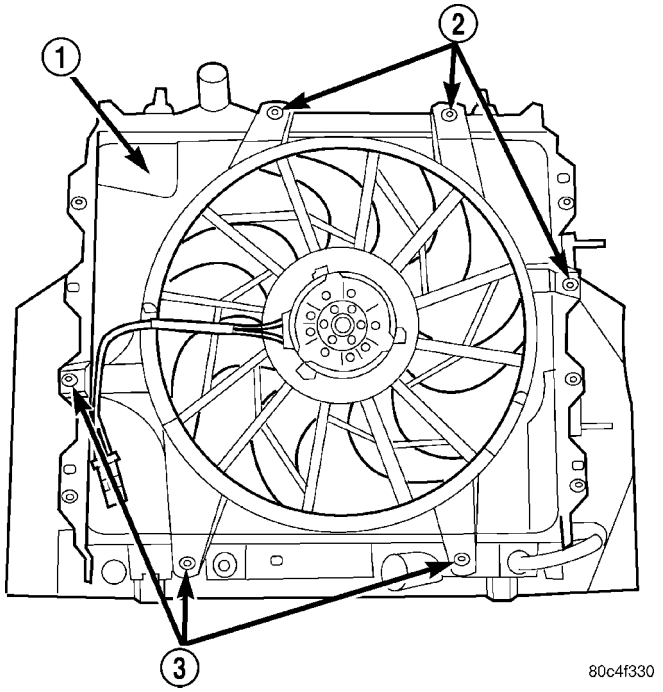

Fig. 23 Radiator Fan - Mounting

1 - RADIATOR FAN SHROUD
2 - SCREWS
3 - SCREWS

(12) Remove remaining fasteners attaching radiator fan shroud to radiator (Fig. 23).

(13) Remove radiator fan/shroud assembly.

(14) Remove remaining fasteners attaching AC condenser to radiator. Reposition AC condenser.

RADIATOR (Continued)

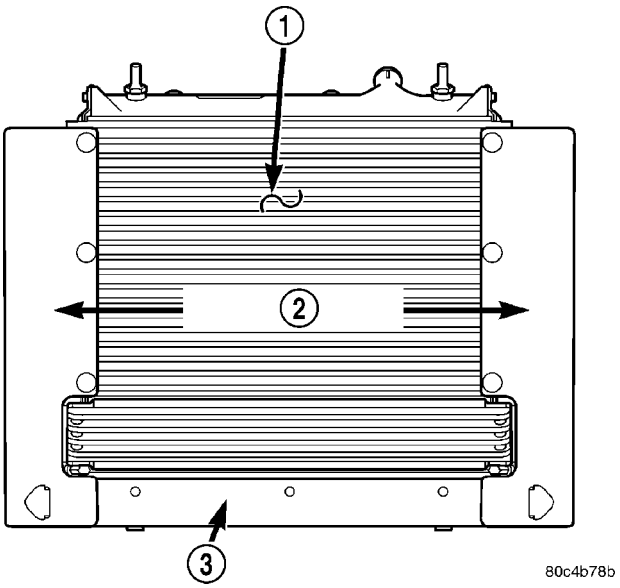

Fig. 24 Air Seals

1 - A/C CONDENSER
2 - SIDE AIR SEALS
3 - LOWER AIR SEAL

(15) Remove radiator assembly by lifting it up from the engine compartment. **Care should be taken not to damage the cooling fins and tubes during removal.**

(16) Remove the lower air seal from radiator (Fig. 24).

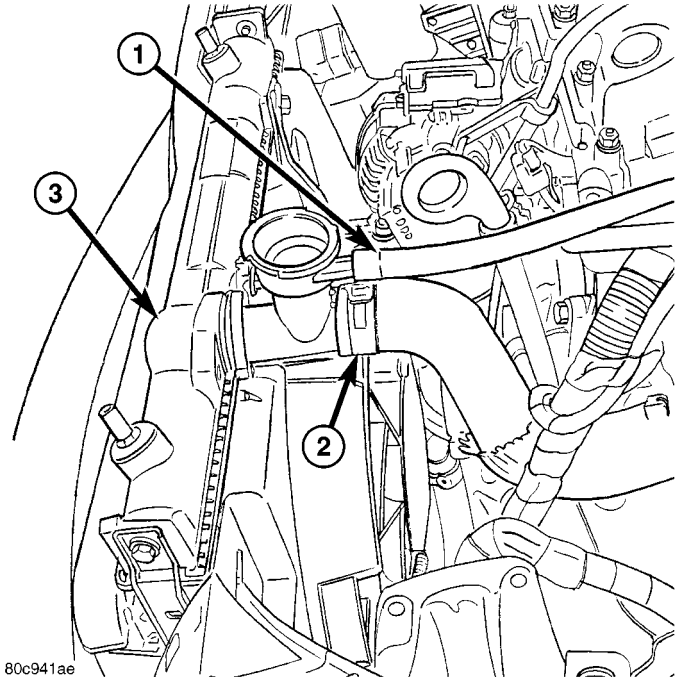

Fig. 25 Radiator

1 - OVERFLOW HOSE
2 - UPPER RADIATOR HOSE
3 - RADIATOR ASSEMBLY

CLEANING

Clean radiator fins are necessary for good heat transfer. The radiator and air conditioning fins should be cleaned when an accumulation of debris has occurred. With the engine cold, apply cold water and compressed air to the back (engine side) of the radiator to flush the radiator and/or A/C condenser of debris.

INSPECTION

Inspect the radiator tanks for cracks, broken or missing fittings also inspect the joint where the tanks seam up to the radiator core for signs of leakage and/or deteriorating seals.

Inspect radiator core for corroded, bent or missing cooling fins. Inspect the core for bent or damaged cooling tubes.

INSTALLATION

(1) Install the lower air seal to radiator (Fig. 24).

(2) Position radiator into mounting position.

(3) Position A/C condenser against radiator. Hand start lower fasteners.

(4) Install radiator fan/shroud assembly. Hand start upper fasteners and remaining side fasteners that hold AC condenser also.

(5) Raise vehicle on hoist.

(6) Connect the lower air seal to the side air seals (Fig. 24).

(7) Install two remaining lower radiator fan shroud fasteners to radiator (Fig. 23). Torque fasteners to 6 N·m (55 in. lbs.).

(8) Connect lower radiator hose. Align the hose and position the clamp so it will not interfere with engine components.

(9) Connect the radiator fan motor electrical connector (Fig. 22).

(10) Close radiator draincock.

(11) Lower vehicle.

(12) Torque radiator fan shroud fasteners to 6 N·m (55 in. lbs.).

(13) Torque AC condenser fasteners to 8 N·m (70 in. lbs.).

(14) Connect upper radiator hose and overflow hose (Fig. 25). Align the upper radiator hose and position the clamp to prevent interference with the engine or hood.

(15) Install upper radiator closure panel (Refer to 23 - BODY/EXTERIOR/RADIATOR CLOSURE PANEL - INSTALLATION).

(16) Install grille (Refer to 23 - BODY/EXTERIOR/GRILLE - INSTALLATION).

(17) Connect negative battery cable.

(18) Fill cooling system with coolant (Refer to 7 - COOLING/ENGINE - STANDARD PROCEDURE).

(19) Operate engine until it reaches normal operating temperature. Check cooling system for correct fluid level and leaks.

HEATER RETURN TUBE

REMOVAL

(1) Disconnect negative battery cable.
(2) Disconnect positive battery cable.
(3) Remove battery.
(4) Drain cooling system (Refer to 7 - COOLING/ ENGINE - STANDARD PROCEDURE).
(5) Remove fasteners securing heater return tube to engine block and thermostat housing (Fig. 26).
(6) Raise vehicle on hoist.
(7) Remove clamp and disconnect heater hose from water pump.
(8) Lower vehicle.
(9) Remove clamp and disconnect heater hose from heater tube.
(10) Remove heater tube.

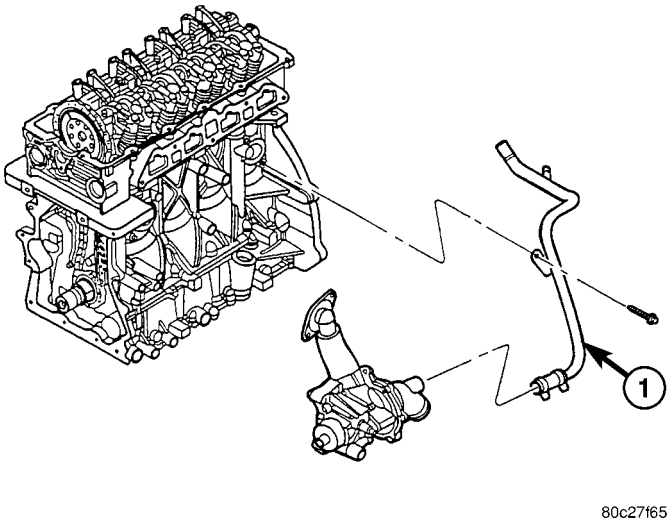

Fig. 26 Heater Return Tube

1- HEATER RETURN TUBE

INSTALLATION

(1) Position heater tube in it's mounting position (Fig. 26).
(2) Connect heater hose to tube. Install clamp.
(3) Raise vehicle on hoist.
(4) Connect heater hose to water pump. Install clamp.
(5) Lower vehicle.
(6) Install fasteners securing heater return tube to engine block and thermostat housing.
(7) Install battery.
(8) Connect positive battery cable.
(9) Connect negative battery cable.
(10) Fill cooling system (Refer to 7 - COOLING/ ENGINE - STANDARD PROCEDURE).

WATER PUMP/POWER STEERING PUMP ASSEMBLY

DESCRIPTION

The water pump on this vehicle is attached to the rear of the power steering pump to form an assembly (Fig. 27). The water pump/power steering pump assembly is located on the front corner of the engine (Fig. 29).

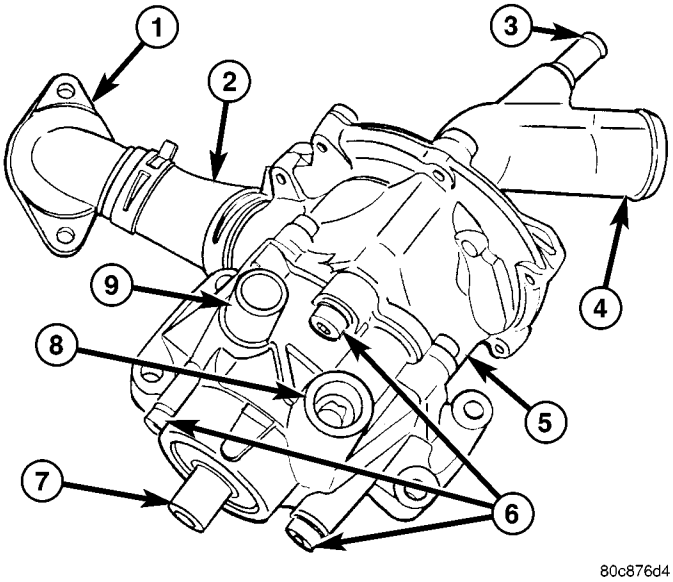

Fig. 27 Water Pump/Power Steering Pump Assembly

1 - CONNECTOR
2 - COOLANT OUTLET CONNECTOR HOSE
3 - HEATER RETURN HOSE INLET
4 - COOLANT INLET
5 - WATER PUMP
6 - PUMP-TO-PUMP ATTACHING (HEX) BOLTS
7 - POWER STEERING PUMP
8 - POWER STEERING PUMP PRESSURE (OUTLET) PORT
9 - POWER STEERING PUMP SUPPLY (INLET) FITTING

The water pump is bolted to the rear of the power steering pump. Driven by the power steering pump shaft, the water pump's impeller is located inside a die-cast aluminum housing. The water pump housing has a built in outlet. The water pump also has a bolt-on inlet cover with two ports, one for incoming coolant from the radiator and the other for incoming coolant from the heater.

Both pumps (water and power steering) can be serviced separately. Remove the entire water pump/ power steering pump assembly, then disassemble it to service either pump.

For information on the power steering pump, (Refer to 19 - STEERING/PUMP - DESCRIPTION).

WATER PUMP/POWER STEERING PUMP ASSEMBLY (Continued)

REMOVAL

NOTE: Before proceeding, review all Warnings and Cautions (Refer to 7 - COOLING - WARNING) and (Refer to 19 - STEERING - WARNING).

(1) Disconnect battery negative (-) terminal.

(2) Remove the accessory drive belt (Refer to 7 - COOLING/ACCESSORY DRIVE/DRIVE BELT - REMOVAL).

(3) Remove power steering fluid reservoir. (Refer to 19 - STEERING/PUMP/RESERVOIR - REMOVAL)

(4) Remove generator. (Refer to 8 - ELECTRICAL/ CHARGING/GENERATOR - REMOVAL)

(5) Drain engine coolant (Refer to 7 - COOLING/ ENGINE - STANDARD PROCEDURE - DRAIN COOLING SYSTEM).

(6) If equipped with air conditioning, remove A/C compressor upper mounting bolts.

(7) Raise vehicle (Refer to LUBRICATION & MAINTENANCE/HOISTING - STANDARD PROCEDURE).

(8) Remove accessory drive belt splash shield.

(9) If equipped with air conditioning, remove A/C compressor lower mounting bolts. Reposition A/C compressor to allow access to power steering pump/ water pump lower mounting bolts. Do not overextend A/C hoses while performing this.

(10) Remove radiator hose at inlet to water pump.

(11) Remove heater tube hose at water pump.

(12) Lower vehicle.

(13) Remove the bolt fastening the power steering pressure hose to the reservoir bracket (Fig. 28).

(14) Back out the tube nut securing the power steering fluid pressure hose to the power steering pump and remove the hose from the pump (Fig. 28). Cap off hose end and pump pressure port.

(15) Remove coolant outlet connector hose at water pump outlet.

(16) Remove all four power steering pump mounting bolts. (Fig. 29)

(17) Remove power steering pump and water pump as an assembly.

(18) To separate the power steering pump from the water pump, (Refer to 7 - COOLING/ENGINE/WATER PUMP - DISASSEMBLY).

(19) If the power steering pump pulley needs to be removed, (Refer to 19 - STEERING/PUMP - DISASSEMBLY).

DISASSEMBLY

(1) Remove the three hex drive bolts and washers that attach the power steering pump to the water pump (Fig. 27).

(2) Use the following steps to access the water pump impeller hex.

(a) Place a ¼ inch drive 10 mm socket in through the coolant inlet tube, then back it into the heater hose fitting area as shown (Fig. 30). Backing the socket into the heater hose fitting makes it easier to perform the following step.

(b) Holding the socket in this position, insert a ¼ inch drive extension (6 inches in length or longer) in through the heater hose fitting into the rear of the 10 mm socket.

(c) Push the socket with the extension into the pump placing the socket on the hex built into the center of the water pump impeller.

(3) While holding the power steering pump shaft from turning using a hex wrench in the pulley end of the shaft, loosen the impeller by rotating the ¼ inch drive extension counterclockwise using a ratchet. The water pump will rise off of the power steering pump as the impeller is rotated.

(4) Once the threads have been disengaged, remove the entire water pump assembly from the power steering pump. **If the water pump will be used again, the 10 mm socket and extension can be left inside the water pump until reassembly is completed.**

(5) If the water pump inlet cover needs to be removed, remove the seven fasteners around the perimeter of the pump and remove the cover. Discard the housing O-ring type seal.

(6) If the power steering pump pulley needs to be removed, (Refer to 19 - STEERING/PUMP - DISASSEMBLY).

NOTE: For reassembly, (Refer to 7 - COOLING/ENGINE/WATER PUMP - ASSEMBLY).

WATER PUMP/POWER STEERING PUMP ASSEMBLY (Continued)

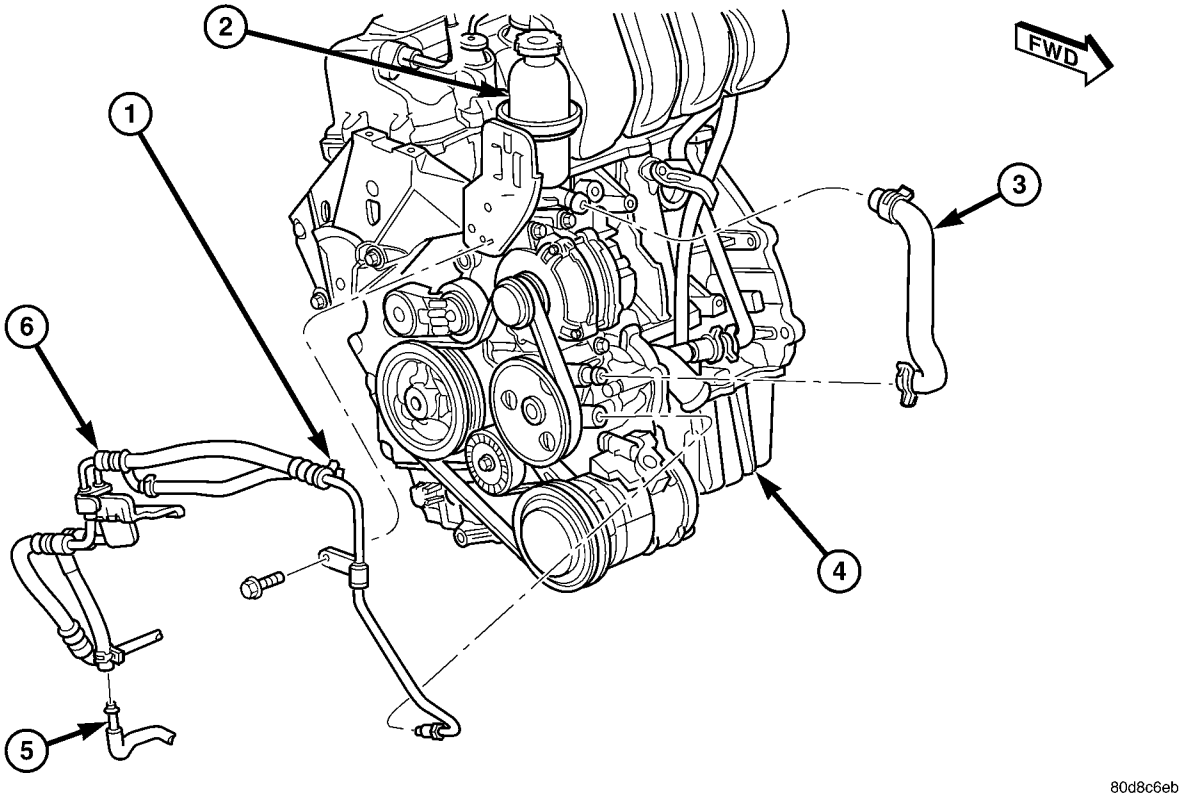

Fig. 28 Hoses, Reservoir And Pump - 1.6L Engine

1 - RETURN HOSE
2 - FLUID RESERVOIR
3 - SUPPLY HOSE
4 - 1.6L ENGINE
5 - COOLER OUTLET TUBE
6 - PRESSURE HOSE

ASSEMBLY

(1) If the water pump inlet cover needs to be installed on the water pump:

(a) First apply Mopar® Dielectric Grease or equivalent to a NEW water pump O-ring seal.

(b) Place the O-ring seal in the housing groove where the cover contacts the housing.

(c) Install the seven fasteners around the perimeter of the pump. Tighten them to 12 N·m (105 in. lbs.) torque.

(2) If a pulley needs to be installed on the power steering pump, (Refer to 19 - STEERING/PUMP - ASSEMBLY).

(3) Place the water pump assembly onto the power steering pump shaft.

(4) Rotate the water pump so the water pump outlet is near the water pump upper mounting holes (hole with dowel guide). Arrange the three pump fastener holes so they line up.

(5) If the water pump impeller hex has not been accessed with a socket, use the following steps to access the water pump impeller hex.

(a) Place a ¼ inch drive 10 mm socket in through the coolant inlet tube, then back it into the heater hose fitting area as shown (Fig. 30).

(b) Holding the socket in this position, insert a ¼ inch drive extension (6 inches in length or longer) in through the heater hose fitting into the rear of the 10 mm socket.

(c) Push the socket with the extension into the pump placing the socket on the hex built into the center of the water pump impeller.

(6) While holding the power steering pump shaft from turning using a hex wrench in the pulley end of the shaft, tighten the water pump impeller rotating the ¼ inch drive extension clockwise using a ratchet. This will draw the water pump in toward the power steering pump. Tighten the impeller to 26 N·m (19 ft. lbs.) torque.

(7) Remove the 10 mm socket, ¼ inch extension and ratchet from the water pump. Remove the hex wrench.

(8) Align the three pump fastener holes and install the three hex drive bolts with washers (Fig. 27). Tighten the bolts to 26 N·m (19 ft. lbs.) torque.

(9) Install assembly on the vehicle. (Refer to 7 - COOLING/ENGINE/WATER PUMP - INSTALLATION)

WATER PUMP/POWER STEERING PUMP ASSEMBLY (Continued)

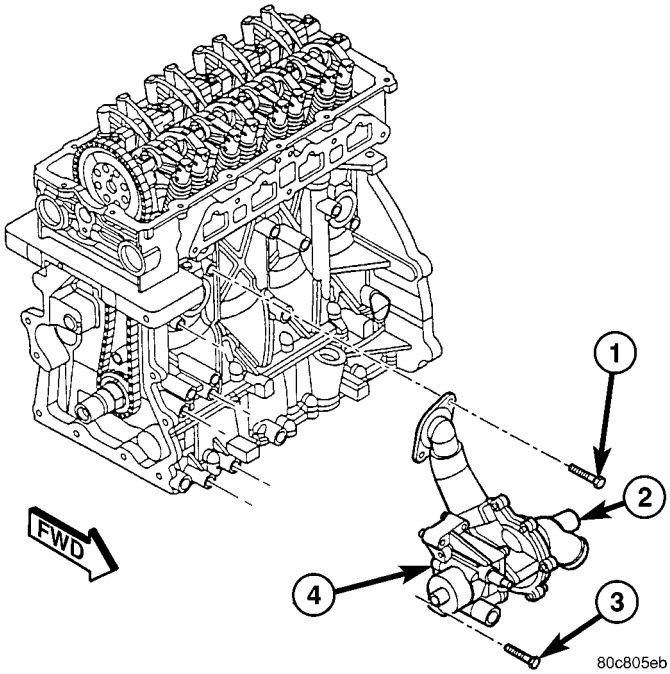

Fig. 29 Water Pump/Power Steering Pump Assembly

1 - OUTLET HOSE CONNECTOR FITTING BOLT (2)
2 - WATER PUMP
3 - POWER STEERING PUMP MOUNTING BOLT (4)
4 - POWER STEERING PUMP

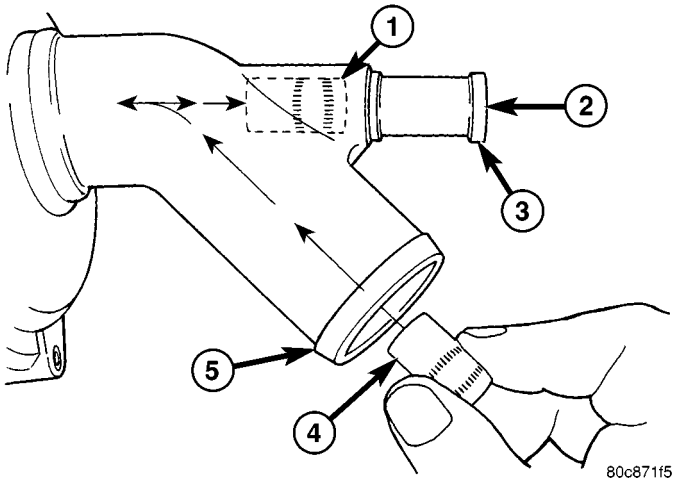

Fig. 30 Inserting Socket into Pump Inlet

1 - SOCKET LOCATION ONCE PLACED INSIDE COOLANT INLET
2 - INSERT EXTENSION THROUGH HERE INTO SOCKET
3 - HEATER HOSE FITTING
4 - 10 MM SOCKET (¼ INCH DRIVE)
5 - COOLANT INLET

INSTALLATION

NOTE: Water pump and power steering pump must be attached to one another before installation in vehicle. For proper procedure, (Refer to 7 - COOLING/ENGINE/WATER PUMP - ASSEMBLY).

(1) Install water pump/power steering pump assembly into engine compartment in reverse of how it was removed.

(2) Install all four power steering pump mounting bolts (Fig. 29). Tighten bolts to 28 N·m (21 ft. lbs.) torque.

(3) Install coolant outlet connector hose at water pump outlet. Install clamp.

(4) Using a lint free towel, wipe clean the open power steering hose end and the power steering pump port. Replace the used O-ring with new. Lubricate the O-ring with power steering fluid.

(5) Attach the power steering fluid pressure hose to the pump outlet port (Fig. 28). Do not tighten the tube nut at this time.

(6) Install the bolt fastening the power steering pressure hose to the reservoir bracket (Fig. 28).

(7) Tighten power steering pressure hose tube nut at power steering pump to 28 N·m (21 ft. lbs.) torque.

(8) Raise vehicle.

(9) Install heater tube hose at water pump fitting. Install clamp.

(10) Install radiator hose at inlet to water pump. Install clamp.

(11) If equipped with air conditioning:

(a) Position A/C compressor, align mounting holes and install, but do not fully tighten, A/C compressor lower and upper mounting bolts.

(b) Lower vehicle.

(c) Tighten A/C compressor upper mounting bolts to 28 N·m (21 ft. lbs.) torque.

(d) Raise vehicle.

(e) Tighten A/C compressor lower mounting bolts to 28 N·m (21 ft. lbs.) torque.

(12) Install drive belt splash shield.

(13) Lower vehicle.

(14) Install generator (Refer to 8 - ELECTRICAL/CHARGING/GENERATOR - INSTALLATION).

(15) Install power steering fluid reservoir. (Refer to 19 - STEERING/PUMP/RESERVOIR - INSTALLATION)

(16) Install accessory drive belt (Refer to 7 - COOLING/ACCESSORY DRIVE/DRIVE BELT - INSTALLATION).

(17) Connect battery negative (-) terminal.

(18) Fill cooling system (Refer to 7 - COOLING - STANDARD PROCEDURE - FILLING COOLING SYSTEM).

(19) Perform POWER STEERING PUMP INITIAL OPERATION procedure. (Refer to 19 - STEERING/PUMP - STANDARD PROCEDURE)

(20) Check for leaks at all hose connections.

ENGINE - 2.0/2.4L DOHC

TABLE OF CONTENTS

page

ENGINE - 2.0/2.4L DOHC
DESCRIPTION 32
OPERATION 32
DIAGNOSIS AND TESTING
COOLING SYSTEM 33
DIAGNOSIS AND TESTING - COOLING SYSTEM LEAK TESTING 39
DIAGNOSIS AND TESTING - COOLING SYSTEM FLOW CHECK 40
COOLING SYSTEM AERATION 40
DIAGNOSIS AND TESTING - COOLING SYSTEM DEAERATION 40
STANDARD PROCEDURE
STANDARD PROCEDURE - DRAINING COOLING SYSTEM 40
STANDARD PROCEDURE - FILLING COOLING SYSTEM 41
CLEANING 42
INSPECTION 42
COOLANT
DESCRIPTION 42
DIAGNOSIS AND TESTING - COOLANT CONCENTRATION TESTING 42
STANDARD PROCEDURE
STANDARD PROCEDURE - ROUTINE COOLANT LEVEL CHECK 43
STANDARD PROCEDURE - ADDING ADDITIONAL COOLANT 43
STANDARD PROCEDURE - COOLANT LEVEL SERVICING 43
COOLANT RECOVERY CONTAINER
DESCRIPTION 45
OPERATION 45
REMOVAL 45
INSTALLATION 45
COOLING SYSTEM PRESSURE CAP
DESCRIPTION 46
OPERATION 47
DIAGNOSIS AND TESTING
DIAGNOSIS AND TESTING - COOLING SYSTEM PRESSURE CAP TESTING 47
DIAGNOSIS AND TESTING - COOLING SYSTEM PRESSURE RELIEF TESTING 47
CLEANING 48
INSPECTION 48
ENGINE BLOCK HEATER
DESCRIPTION 48
OPERATION 48
DIAGNOSIS AND TESTING
ENGINE BLOCK HEATER 49
REMOVAL 49
INSTALLATION 49
ENGINE COOLANT TEMPERATURE SENSOR
DESCRIPTION 49
OPERATION 49
REMOVAL 50
INSTALLATION 50
ENGINE COOLANT THERMOSTAT
DESCRIPTION 50
OPERATION 51
DIAGNOSIS AND TESTING - ENGINE COOLANT THERMOSTAT 51
REMOVAL 51
INSTALLATION 51
HOSE CLAMPS
DESCRIPTION - HOSE CLAMPS 52
OPERATION 52
RADIATOR FAN
DESCRIPTION 52
OPERATION 53
DIAGNOSIS AND TESTING
RADIATOR FAN MOTOR TEST 54
REMOVAL 54
INSTALLATION 55
RADIATOR
REMOVAL 55
CLEANING 57
INSPECTION 57
INSTALLATION 57
RADIATOR DRAINCOCK
REMOVAL 57
INSTALLATION 58
THERMOSTAT HOUSING
REMOVAL 58
INSTALLATION 58
WATER PUMP
DIAGNOSIS AND TESTING
WATER PUMP 59
REMOVAL 59
INSPECTION 59
INSTALLATION 59
WATER PUMP INLET TUBE
REMOVAL 60
INSTALLATION 60

ENGINE - 2.0/2.4L DOHC

DESCRIPTION

Non-Turbo

The cooling system consists of an engine cooling module, thermostat, coolant recovery/reserve system, coolant, and a water pump. The engine cooling module (Fig. 1) consists of a radiator, electric fan motor, fan, shroud, transmission oil cooler, hoses, clamps, air conditioning condenser and transmission oil lines.

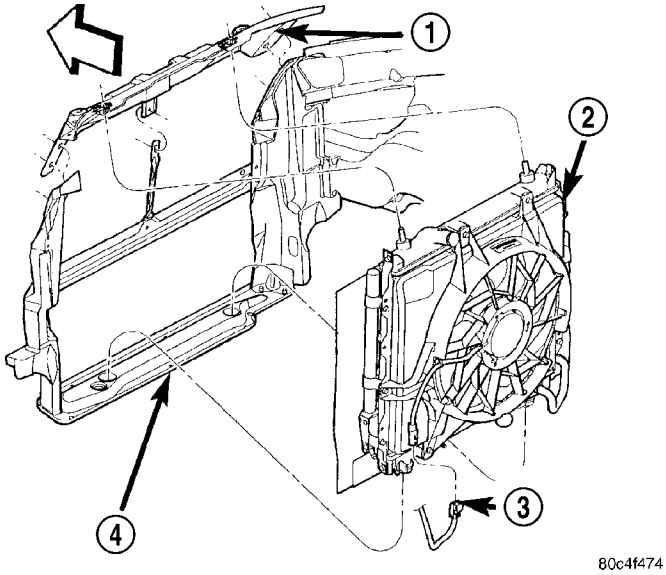

Fig. 1 Cooling Module

1 - UPPER RADIATOR CLOSURE PANEL
2 - COOLING MODULE
3 - RADIATOR FAN CONNECTOR
4 - LOWER RADIATOR CROSSMEMBER

Turbo

The cooling system consists of an engine cooling module, thermostat, coolant recovery/reserve system, coolant, and a water pump. The engine cooling module (Fig. 2) consists of a radiator, electric fan assembly, transmission oil cooler, charge air cooler, hoses, clamps, air conditioning condenser and transmission oil lines. Turbocharged equipped vehicles utilize the radiator in-tank cooler for a power steering fluid cooler.

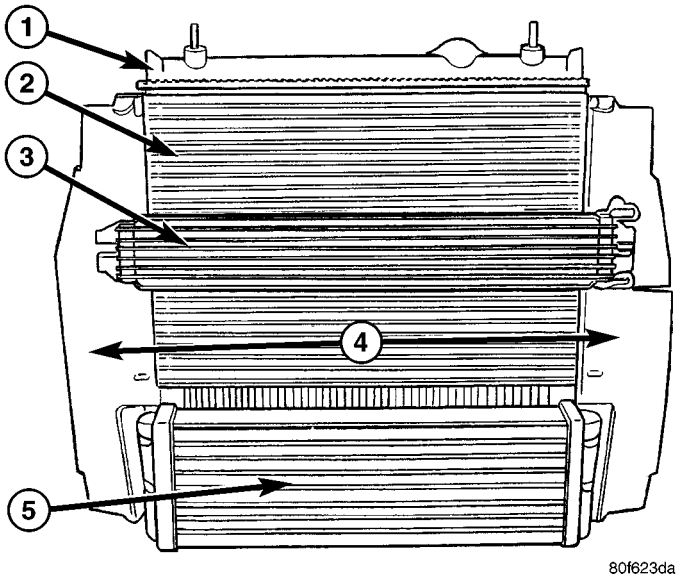

Fig. 2 Cooling Module - 2.4L Turbo

1 - RADIATOR
2 - A/C CONDENSER
3 - AUTOMATIC TRANSMISSION OIL COOLER
4 - AIR SEALS
5 - CHARGE AIR COOLER

OPERATION

The cooling systems primary purpose is to maintain engine temperature in a range that will provide satisfactory engine performance and emission levels under all expected driving conditions. The system does this by transferring heat from the engine metal to the coolant, then moves this heated coolant to the radiator where this heat is transferred to the ambient air. It also provides hot water (coolant) for heater performance and cooling for the automatic transmission oil.

- When the Engine is cold: The thermostat is closed and the cooling system has no flow through the radiator. The coolant flows through the engine, heater system which also serves as the bypass.
- When the Engine is warm: Thermostat is open and the cooling system has flow through the radiator, engine, heater system which also serves as the bypass.

The coolant flow circuit is shown in (Fig. 3).

ENGINE - 2.0/2.4L DOHC (Continued)

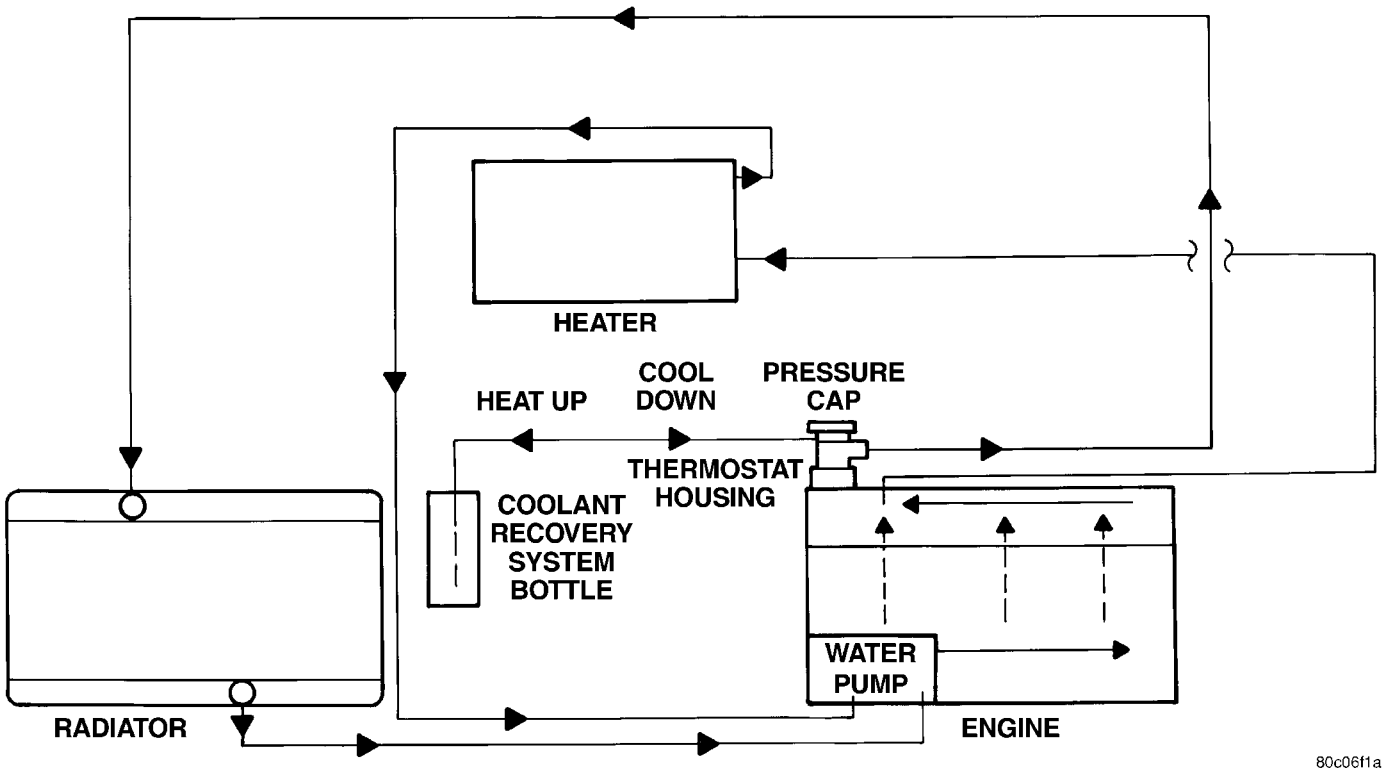

Fig. 3 Cooling System Operation

DIAGNOSIS AND TESTING

COOLING SYSTEM

CONDITION	POSSIBLE CAUSE	CORRECTION
TEMPERATURE GAUGE READS LOW	1. Diagnostic Trouble Code (DTC) has been set indicating a stuck open engine thermostat.	1. Replace thermostat, if necessary. If a (DTC) has not been set, the problem may be with the temperature gauge.
	2. Engine Coolant Temperature Sensor.	2. Check connector at Engine Coolant Temperature Sensor. Repair as necessary.
	3. Faulty temperature gauge.	3. Check gauge operation (Refer to 8 - ELECTRICAL/INSTRUMENT CLUSTER - DIAGNOSIS AND TESTING).
	4. Coolant level low during cold ambient temperature, accompanied by poor heater performance.	4. Check coolant level in the coolant recovery/reserve container and the radiator. Inspect the system for leaks. Repair as necessary. Refer to WARNINGS in this section before removing pressure cap.

ENGINE - 2.0/2.4L DOHC (Continued)

CONDITION	POSSIBLE CAUSE	CORRECTION
TEMPERATURE GAUGE READS HIGH OR ENGINE COOLANT WARNING LAMP ILLUMINATES. COOLANT MAY OR MAY NOT BE LOST FROM SYSTEM.	1. Trailer being towed, a steep hill being climbed, vehicle being operated in slow moving traffic, or engine idling during high ambient (outside) temperatures with air conditioning on. High altitudes could also cause these conditions.	1. This may be a temporary condition and repair is not necessary. Turn off the air conditioning and drive the vehicle without any of the previous conditions. Observe the temperature gauge the gauge should return to the normal range. If the gauge does not return to the normal range, determine the cause of the overheating and repair. Refer to POSSIBLE CAUSES in this section.
	2. Faulty temperature gauge.	2. Check gauge operation (Refer to 8 - ELECTRICAL/INSTRUMENT CLUSTER - DIAGNOSIS AND TESTING).
	3. Is temperature warning lamp (if equipped) illuminating unnecessarily?	3. Check warning lamp operation (Refer to 8 - ELECTRICAL/ INSTRUMENT CLUSTER - DIAGNOSIS AND TESTING).
	4. Coolant low in recovery/reserve bottle and radiator?	4. Check for coolant leaks and repair as necessary.
	5. Pressure cap not installed tightly. If cap is loose, boiling point of coolant will be lowered. Also refer to the following step 6.	5. Tighten cap.
	6. Poor seals at pressure cap.	6. (a) Check condition of cap and cap seals (Refer to 7 - COOLING/ ENGINE/RADIATOR PRESSURE CAP - DIAGNOSIS AND TESTING). Replace cap if necessary. (b) Check condition of filler neck. If neck is warped or damaged, replace neck.
	7. Coolant level low in radiator, but not in coolant recovery/reserve bottle. This indicates the radiator is not drawing coolant from the coolant recovery/reserve bottle as the engine cools. As the engine cools, a vacuum is formed inside the cooling system. If the pressure cap seals are defective, or the cooling system has a leak, a vacuum cannot be formed.	7. (a) Check condition of pressure cap and cap seals. Replace cap if necessary. (b) Check condition of filler neck. Replace if damaged. (c) Check condition of hose from filler neck to coolant container. It should be tight at both ends without any kinks or tears. Replace hose as necessary. (d) Check coolant recovery/reserve bottle and hose for blockage. Repair as necessary.

ENGINE - 2.0/2.4L DOHC (Continued)

CONDITION	POSSIBLE CAUSE	CORRECTION
	8. Freeze point of coolant not correct. Mixture ratio may be too rich.	8. Check coolant concentration (Refer to 7 - COOLING/ENGINE/ COOLANT - DIAGNOSIS AND TESTING). Adjust glycol-to-water ratio as required.
	9. Coolant not flowing through system.	9. Check for coolant flow at filler neck with some coolant removed, engine warm, and thermostat open. Coolant should be observed flowing through filler neck. If flow is not observed, determine reason for lack of flow and repair as necessary.
	10. Radiator air seals missing or improperly installed.	10. Inspect air seals. Correct as necessary.
	11. Radiator or A/C condenser fins are dirty or clogged.	11. Clean obstruction from fins.
	12. Radiator core is plugged or corroded.	12. Replace or clean radiator.
	13. Fuel or ignition system problems.	13. Refer to the appropriate Powertrain Diagnostic Procedure manual.
	14. Dragging Brakes.	14. Inspect brake system and repair as necessary (Refer to 5 - BRAKES - DIAGNOSIS AND TESTING).
	15. Bug screen or other aftermarket accessory is being used causing reduced air flow.	15. Remove bug screen or accessory.
	16. Thermostat partially or completely closed.	16. Check thermostat operation and replace as necessary (Refer to 7 - COOLING/ENGINE/ENGINE COOLANT THERMOSTAT - DIAGNOSIS AND TESTING).
	17. Cooling fan not operating properly.	17. Check electric fan operation and repair as necessary.
	18. Cylinder head gasket leaking.	18. Check cylinder head gasket for leaks (Refer to 7 - COOLING/ ENGINE - DIAGNOSIS AND TESTING - COOLING SYSTEM LEAK TESTING).
	19. Heater core leaking.	19. Check heater core for leaks.
TEMPERATURE GAUGE READING IS INCONSISTENT (FLUCTUATES, CYCLES OR IS ERRATIC)	1. The gauge may cycle up and down. This is due to the cycling of the electric radiator fan.	1. A normal condition. No correction is necessary. If gauge cycling is the hot zone, check electric fan operation and repair as necessary.
	2. During cold weather operation with the heater blower in the high position, the gauge reading may drop slightly.	2. A normal condition. No correction is necessary.

ENGINE - 2.0/2.4L DOHC (Continued)

CONDITION	POSSIBLE CAUSE	CORRECTION
	3. Temperature gauge or Engine Coolant Temperature Sensor is defective or shorted.	3. Check gauge operation (Refer to 8 - ELECTRICAL/INSTRUMENT CLUSTER - DIAGNOSIS AND TESTING).
	4. Gauge reading rises when vehicle is brought to a stop after heavy use (engine still running).	4. A normal condition. No correction is necessary. The gauge should return to normal range after vehicle is driven.
	5. Gauge reading high after restarting a warmed-up (hot) engine.	5. A normal condition. No correction is necessary. The gauge should return to normal range after a few minutes of engine operation.
	6. Coolant level low in radiator (air will build up in the cooling system causing the thermostat to open late).	6. Check and correct coolant leaks.
	7. Cylinder head gasket leaking allowing exhaust gas to enter cooling system. This will cause thermostat to open late.	7. (a) Check for cylinder head gasket leaks using Tool C-3685-A Block Leak Tester or the equivalent. Repair as necessary. (b) Check for coolant in the engine oil. Inspect for white steam emitting from exhaust system. Repair as necessary.
	8. Water pump impeller loose on shaft.	8. Check water pump and replace as necessary.
	9. Air leak on the suction side of water pump allows air to build up in cooling system. This will cause the thermostat to open late.	9. Locate leak and repair as necessary.
PRESSURE CAP IS BLOWING OFF STEAM AND/OR COOLANT FLOWING INTO RECOVERY BOTTLE. TEMPERATURE GAUGE READING MAY BE ABOVE NORMAL, BUT NOT HIGH. COOLANT LEVEL MAY BE HIGH IN RECOVERY BOTTLE.	1. Pressure relief valve in pressure cap is defective.	1. Check condition of pressure cap and seals (Refer to 7 - COOLING/ ENGINE/RADIATOR PRESSURE CAP - DIAGNOSIS AND TESTING). Replace as necessary.
COOLANT LOSS TO THE GROUND WITHOUT PRESSURE CAP BLOWOFF. GAUGE IS READING HIGH OR HOT.	1. Coolant leaks in radiator, cooling system hoses, water pump or engine.	1. Pressure test cooling system and repair as necessary.
DETONATION OR PRE-IGNITION (NOT CAUSED BY IGNITION SYSTEM). GAUGE MAY OR MAY NOT BE READING HIGH.	1. Engine overheating.	1. Check reason for overheating and repair as necessary.
	2. Freeze point of coolant not correct.	2. Check the freeze point of the coolant (Refer to 7 - COOLING/ ENGINE/COOLANT - DIAGNOSIS AND TESTING). Adjust glycol-to-water ratio as required.

ENGINE - 2.0/2.4L DOHC (Continued)

CONDITION	POSSIBLE CAUSE	CORRECTION
HOSE OR HOSES COLLAPSE WHEN ENGINE IS COOLING	1. Vacuum created in cooling system on engine cool-down is not being relieved through coolant recovery/reserve system.	1. (a) Pressure cap relief valve stuck (Refer to 7 - COOLING/ ENGINE/RADIATOR PRESSURE CAP - DIAGNOSIS AND TESTING). Replace as necessary. (b) Hose between coolant recovery/reserve bottle and outlet connector is kinked. Repair as necessary. (c) Vent at coolant recovery/reserve bottle is plugged. Clean vent and repair as necessary. (d) Recovery/reserve bottle is internally blocked or plugged. Check for blockage and repair as necessary.
RADIATOR FAN OPERATES ALL THE TIME	1. Malfunctioning electrical component or circuit. 2. Check for low coolant level.	1. Refer to appropriate Powertrain Diagnostic Procedures. Repair as necessary. 2. Repair as necessary.
RADIATOR FAN WILL NOT OPERATE, GAUGE READING HIGH OR HOT	1. Fan motor defective. 2. Fan relay, powertrain control module (PCM) or engine coolant temperature sensor defective. 3. Blown fuse in power distribution center (PDC).	1. Refer to appropriate Powertrain Diagnostic Procedures manual for operation of the DRB III® scan tool. Repair as necessary. 2. Refer to appropriate Powertrain Diagnostic Procedures manual for operation of the DRB III® scan tool. Repair as necessary. 3. Determine cause for blown fuse and repair as necessary.
NOISY FAN	1. Fan blade loose. 2. Fan blade striking a surrounding object. 3. Air obstructions at radiator or A/C condenser. 4. Electric fan motor defective.	1. Replace radiator fan assembly. 2. Locate point of fan blade contact and repair as necessary. 3. Remove obstructions and/or clean debris from radiator and/or A/C condenser. 4. Replace radiator fan assembly.

ENGINE - 2.0/2.4L DOHC (Continued)

CONDITION	POSSIBLE CAUSE	CORRECTION
INADEQUATE AIR CONDITIONER PERFORMANCE (COOLING SYSTEM SUSPECTED)	1. Electric radiator fan not operating when A/C is on.	1. Refer to appropriate Powertrain Diagnostic Procedures manual for operation of the DRB III® scan tool. Repair as necessary.
	2. Radiator and/or air conditioning condenser is restricted, obstructed or dirty.	2. Remove restriction and/or clean as necessary.
	3. Radiator air seals missing or improperly installed.	3. Inspect air seals. Repair as necessary.
	4. Engine is overheating (heat may be transferred from radiator to A/C condenser). High underhood temperature due to engine overheating may also transfer heat to A/C components.	4. Correct overheating condition. Refer to this section.
INADEQUATE HEATER PERFORMANCE	1. Has a diagnostic trouble code (DTC) been set?	1. Refer to Powertrain Diagnostic Procedures.
	2. Coolant level low.	2. Check cooling system for leaks. Repair as necessary.
	3. Obstructions in heater hose fittings at engine.	3. Remove heater hoses at both ends and check for obstructions. Repair as necessary.
	4. Heater hose kinked.	4. Locate kinked area and repair as necessary.
	5. Water pump is not pumping coolant to heater core. When the engine is fully warmed up, both heater hoses should be hot to the touch.	5. (Refer to 7 - COOLING/ENGINE/ WATER PUMP - DIAGNOSIS AND TESTING). Repair as necessary.
HEAT ODOR	1. Various heat shields are used at certain components. One or more of these shields may be missing.	1. Locate missing shields and replace or repair as necessary.
	2. Is temperature gauge reading above the normal range?	2. Refer to the previous Temperature Gauge Reads High in these Diagnostic Charts. Repair as necessary.
	3. Is cooling fan operating correctly?	3. Repair as necessary.
	4. Has undercoating been applied to any unnecessary component.	4. Clean undercoating as necessary.
	5. Engine may be running rich causing the catalytic converter to overheat.	5. Refer to appropriate Powertrain Diagnostic Procedures manual for operation of the DRB III® scan tool. Repair as necessary.

ENGINE - 2.0/2.4L DOHC (Continued)

CONDITION	POSSIBLE CAUSE	CORRECTION
POOR DRIVEABILITY (THERMOSTAT POSSIBLY STUCK OPEN). GAUGE MAY BE READING LOW	1. Has a diagnostic trouble code (DTC) been set?	1. Refer to the Powertrain Diagnostic Procedure manual for checking a DTC related to the thermostat.
STEAM IS COMING FROM FRONT OF VEHICLE NEAR GRILL AREA WHEN WEATHER IS WET, ENGINE IS WARMED UP, RUNNING, AND VEHICLE IS STATIONARY. TEMPERATURE GAUGE IS IN NORMAL RANGE.	1. During wet weather, moisture (snow, ice or rain condensation) on the radiator will evaporate when the thermostat opens. This opening allows heated water into the radiator. When the moisture contact the hot radiator, steam may be emitted. This usually occurs in cold weather with no fan or airflow to blow it away.	1. Occasional steam emitting from this area is normal. No repair is necessary.
COOLANT COLOR	1. Coolant color is not necessarily an indication of adequate corrosion or temperature protection. Do not rely on coolant color for determining condition of coolant.	1. Check the freeze point of the coolant (Refer to 7 - COOLING/ ENGINE/COOLANT - DIAGNOSIS AND TESTING). Adjust the glycol-to-water ratio as required.
COOLANT LEVEL CHANGES IN COOLANT RECOVERY/RESERVE BOTTLE	1. Level changes are to be expected as coolant volume fluctuates with engine temperature. If the level in the bottle was between the FULL HOT and ADD marks at normal engine operating temperature, the level should return to within that range after operation at elevated temperatures.	1. A normal condition. No repair is necessary.

DIAGNOSIS AND TESTING - COOLING SYSTEM LEAK TESTING

WARNING: IF VEHICLE HAS BEEN RUN RECENTLY, WAIT 15 MINUTES BEFORE REMOVING PRESSURE CAP. PLACE A SHOP TOWEL OVER THE CAP, AND WITHOUT PUSHING DOWN, ROTATE IT COUNTER-CLOCKWISE TO THE FIRST STOP. ALLOW FLUIDS TO ESCAPE THROUGH THE OVERFLOW TUBE. WHEN THE SYSTEM STOPS PUSHING COOLANT AND STEAM INTO THE COOLANT RECOVERY BOTTLE AND PRESSURE DROPS, PUSH DOWN ON THE CAP AND REMOVE IT COMPLETELY. SQUEEZING THE RADIATOR INLET HOSE WITH A SHOP TOWEL (TO CHECK PRESSURE) BEFORE AND AFTER TURNING TO THE FIRST STOP IS RECOMMENDED.

The cooling system should be full. Add coolant if necessary.

With engine not running, wipe the coolant filler neck sealing seat clean.

Attach a cooling system pressure tester (Special Tool 7700 or equivilent) to the coolant filler neck, as shown in (Fig. 4) and apply 104 kPa (15 psi) pressure. If the pressure drops more than 2 psi in 2 minutes inspect all points for external leaks. For Special Tool identification, (Refer to 7 - COOLING - SPECIAL TOOLS).

Move all hoses at the radiator and heater while system is pressurized at 104 kPa (15 psi), since some leaks occur while driving due to engine movement while driving.

If there are no external leaks after the gauge dial shows a drop in pressure, detach the tester. Start engine and run the engine to normal operating temperature in order to open the thermostat and allow the coolant to expand. Reattach the tester. If the needle on the dial fluctuates, it indicates a combustion leak and is usually a head gasket leak.

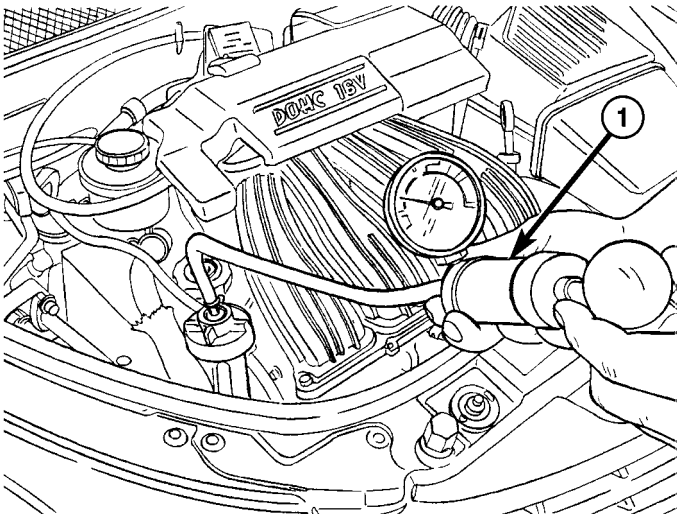

Fig. 4 Pressure Testing Cooling System

1 - SPECIAL TOOL 7700

WARNING: WITH TOOL IN PLACE PRESSURE BUILDS UP FAST. ANY EXCESSIVE AMOUNT OF PRESSURE BUILT UP BY CONTINUOUS ENGINE OPERATION MUST BE RELEASED TO A SAFE PRESSURE POINT. NEVER PERMIT PRESSURE TO EXCEED 138 kPa (20 psi).

If the needle on the dial does not fluctuate, race the engine a few times. If an abnormal amount of coolant or steam is emitted from the tailpipe, it may indicate a faulty head gasket, cracked engine block or cylinder head.

There may be internal leaks which can be determined by removing the oil dipstick. If water globules appear intermixed with the oil, it will indicate a internal leak in the engine. If there is an internal leak, the engine must be disassembled for repair.

DIAGNOSIS AND TESTING - COOLING SYSTEM FLOW CHECK

To determine whether coolant is flowing through the cooling system, use one of the following procedures:

PREFERRED METHOD

WARNING: DO NOT REMOVE THE COOLING SYSTEM PRESSURE CAP OR ANY HOSE WITH THE SYSTEM HOT AND UNDER PRESSURE BECAUSE SERIOUS BURNS FROM COOLANT CAN OCCUR.

- Remove pressure cap when engine is cold. Remove small amount of coolant. Idle engine until thermostat opens. You should observe coolant flow while looking down the filler neck. Once flow is detected install the pressure cap. Replace removed coolant into coolant recovery container.

ALTERNATIVE METHOD

- If engine is cold, idle engine until normal operating temperature is reached. Feel the upper radiator hose. If it is hot, coolant is circulating.

COOLING SYSTEM AERATION

Low coolant level in the cooling system will cause aeration, resulting in the following conditions:

- Corrosion in the system
- High reading shown on the temperature gauge
- Loss of coolant flow through the heater
- Exhaust gas leaks into the coolant can also cause the above problems

DIAGNOSIS AND TESTING - COOLING SYSTEM DEAERATION

Air can only be removed from the system by gathering under the pressure cap. On the next heat up it will be pushed past the pressure cap into the coolant recovery bottle by thermal expansion of the coolant. It then escapes to the atmosphere in the coolant recovery bottle and is replaced with coolant on cool down.

To effectively deaerate the system, multiple thermal cycles of the system may be required.

NOTE: Deaeration does not occur at engine idle—higher engine speeds are required. Normal driving will deaerate cooling system.

STANDARD PROCEDURE

STANDARD PROCEDURE - DRAINING COOLING SYSTEM

WARNING: DO NOT OPEN THE RADIATOR DRAINCOCK WITH THE SYSTEM HOT AND UNDER PRESSURE. SERIOUS BURNS FROM COOLANT CAN OCCUR.

NOTE: Drain, flush, and fill the cooling system at the mileage or time intervals specified in the MAINTENANCE SCHEDULE (Refer to LUBRICATION & MAINTENANCE/MAINTENANCE SCHEDULES - DESCRIPTION). If the solution is dirty, rusty, or contains a considerable amount of sediment; clean and flush with a reliable cooling system cleaner. Care should be taken in disposing of the used engine coolant from your vehicle. Check governmental regulations for disposal of used engine coolant.

ENGINE - 2.0/2.4L DOHC (Continued)

(1) Position a clean collecting container under draincock location.

(2) Without removing the pressure cap and with system not under pressure, turn draincock counter-clockwise to open (Fig. 5).

(3) The coolant reserve bottle should empty first, then remove the pressure cap.

(4) If coolant reserve bottle does not empty first:

(a) Check condition of the pressure cap and cap seals.

(b) Check for kinked/torn overflow hose from filler neck to reserve bottle.

(5) Allow cooling system to drain completely.

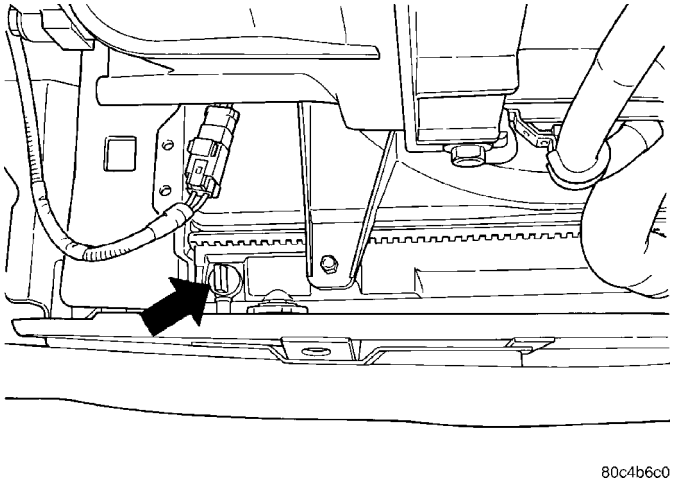

Fig. 5 Cooling System Draincock Location

STANDARD PROCEDURE - FILLING COOLING SYSTEM

WARNING: MAKE SURE ENGINE COOLING SYSTEM IS COOL BEFORE REMOVING PRESSURE CAP OR ANY HOSE. THE COOLING SYSTEM IS PRESSURIZED WHEN HOT. SEVERE PERSONAL INJURY MAY RESULT FROM ESCAPING HOT COOLANT.

CAUTION: Do not use well water, or suspect water supply in cooling system. A 50/50 mixture of the recommended ethylene glycol and distilled water is recommended. For recommended coolant usage, (Refer to LUBRICATION & MAINTENANCE/FLUID TYPES - DESCRIPTION).

NOTE: For cooling system capacity (Refer to LUBRICATION & MAINTENANCE/SPECIFICATIONS - FLUID CAPACITIES).

(1) Close radiator draincock. Hand tighten only.

(2) Open, but do not remove cooling system bleed valve (Fig. 6).

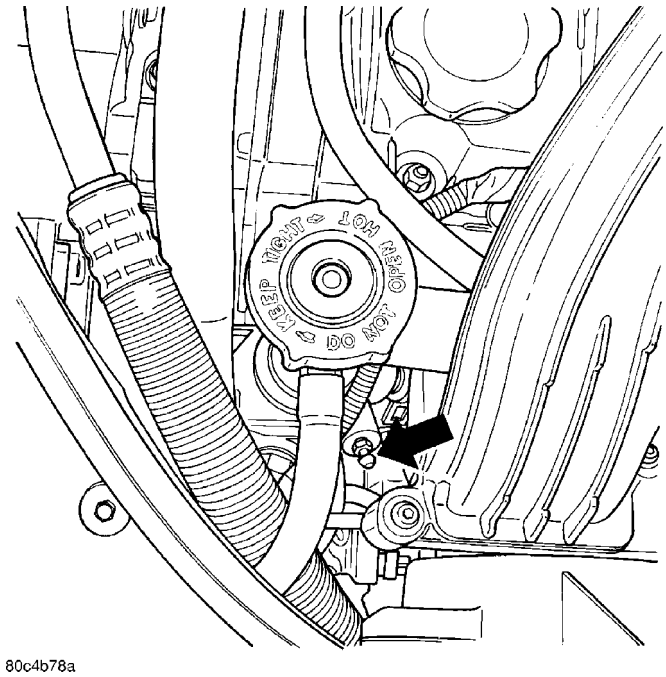

Fig. 6 Cooling System Bleed Valve

(3) Attach a 6.35 mm (0.250 in.) inside diameter clear hose that is 120.0 cm (48 in.) long to the bleed valve. Route the hose away from the accessory drive belts and radiator fan. Position the other end of the hose into a collecting container. The hose will prevent coolant from contacting the accessory drive belts, A/C compressor, and other components.

(4) Remove the cooling system pressure cap. Install Special Tool 8195 Filling Aid Funnel (Fig. 7).

(5) Use the supplied clip to pinch overflow hose (Fig. 7).

NOTE: Be careful not to spill coolant on drive belts or the generator.

NOTE: While filling the cooling system, pour coolant into the larger section of the Filling Aid Funnel 8195.

(6) Slowly fill the cooling system until a steady stream of coolant flows from the attached hose on the bleed valve.

(7) Close the bleed valve and remove the hose.

(8) Remove clip from overflow hose and remove funnel 8195.

(9) Fill coolant to the top of the pressure cap neck.

(10) Install cooling system pressure cap.

CAUTION: Coolant may leak out of the bottle overflow tube if filling too rapidly.

ENGINE - 2.0/2.4L DOHC (Continued)

(11) Slowly fill coolant reserve/recovery bottle to at least the FULL HOT mark with the recommended coolant. It may be necessary to add additional coolant to the reserve/recovery bottle after three or four warm-up/cool down cycles to maintain coolant level between the FULL HOT and ADD marks.This is due to the removal of trapped air from the system.

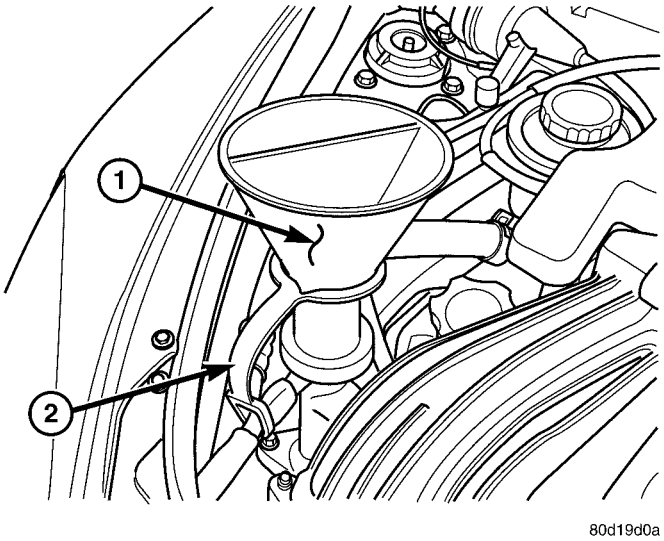

Fig. 7 Filling the Cooling System

1 - SPECIAL TOOL 8195 FILLING AID FUNNEL
2 - PINCH OVERFLOW HOSE

CLEANING

CAUTION: Internal radiator pressure must not exceed 138 kPa (20 psi) as damage to radiator may result.

Reverse flushing of cooling system is the forcing of water through the cooling system. This is done using air pressure in the opposite direction of normal coolant flow. It is usually only necessary with very dirty systems with evidence of partial plugging.

(1) Drain cooling system. Remove thermostat housing and thermostat. Install thermostat housing.

(2) Connect a suitable cooling system flusher and follow instructions supplied with flusher.

INSPECTION

After performing a cleaning/flush procedure, inspect all hoses, clamps and connections for deterioration and leaks. Inspect radiator and heater core for leaks.

COOLANT

DESCRIPTION

CAUTION: Use of Propylene Glycol based coolants is not recommended, as they provide less freeze protection and less corrosion protection. Do not mix coolant types. If coolant other than Mopar® Antifreeze/Coolant, 5 Year/100,000 Mile Formula or equivalent is added, the mixed coolant will have a reduced service schedule.

The use of aluminum cylinder heads, and water pumps requires special corrosion protection. Mopar® Antifreeze/Coolant, 5 Year/100,000 Mile Formula or equivalent ethylene glycol based coolant with corrosion inhibitors (called HOAT, for Hybrid Organic Additive Technology) is recommended. This coolant offers the best engine cooling without corrosion when mixed with 50% Ethylene Glycol and 50% distilled water to obtain a freeze point of -37°C (-35°F). If it loses color or becomes contaminated, drain, flush, and replace with fresh properly mixed coolant solution. Mixing of coolants other than specified (non-HOAT), will reduce the 5 year/100,000 mile corrosion protection.

DIAGNOSIS AND TESTING - COOLANT CONCENTRATION TESTING

Coolant concentration should be checked when any additional coolant was added to system or after a coolant drain, flush and refill. The coolant mixture offers optimum engine cooling and protection against corrosion when mixed to a freeze point of -37°C (-34°F) to -46°C (-50°F). The use of a hydrometer or a refractometer can be used to test coolant concentration.

A hydrometer will test the amount of glycol in a mixture by measuring the specific gravity of the mixture. The higher the concentration of ethylene glycol, the larger the number of balls that will float, and higher the freeze protection (up to a maximum of 60% by volume glycol).

A refractometer (Special Tool 8286)(Refer to 7 - COOLING - SPECIAL TOOLS) will test the amount of glycol in a coolant mixture by measuring the amount a beam of light bends as it passes through the fluid.

Some coolant manufactures use other types of glycols into their coolant formulations. Propylene glycol is the most common new coolant. However, propylene glycol based coolants do not provide the same freezing protection and corrosion protection and is not recommended.

CAUTION: Do not mix types of coolant—corrosion protection will be severely reduced.

COOLANT (Continued)

STANDARD PROCEDURE

STANDARD PROCEDURE - ROUTINE COOLANT LEVEL CHECK

NOTE: Do not remove pressure cap for routine coolant level inspections.

The coolant recovery/reserve system provides a quick visual method for determining the coolant level without removing the pressure cap. Simply observe, with the engine idling and warmed up to normal operating temperature, that the level of the coolant in the recovery/reserve bottle (Fig. 8) is between the FULL HOT and ADD marks.

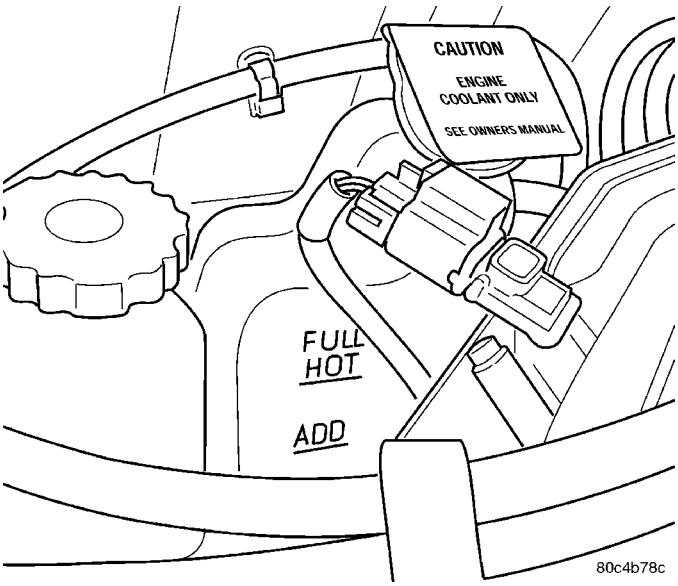

Fig. 8 Coolant Level

STANDARD PROCEDURE - ADDING ADDITIONAL COOLANT

NOTE: The radiator cap should not be removed.

When additional coolant is needed, it should be added to the coolant recovery container (Fig. 9) or (Fig. 10). Use only the recommended 50/50 mixture of ethylene glycol type antifreeze and distilled water (Refer to 7 - COOLING/ENGINE/COOLANT - DESCRIPTION).

CAUTION: COOLANT MAY LEAK OUT OF THE BOTTLE OVERFLOW TUBE WHILE FILLING RAPIDLY.

STANDARD PROCEDURE - COOLANT LEVEL SERVICING

NOTE: The cooling system is closed and designed to maintain coolant level to the top of the radiator.

When servicing requires a coolant level check in the radiator, the engine must be **off** and **not** under pressure. Drain several ounces of coolant from the radiator drain cock while observing the coolant recovery container. Coolant level in the container should drop slightly. Remove the pressure cap (Fig. 9) or (Fig. 10). The radiator should be full to the top. If not, and the coolant level in the recovery contianer is at the ADD mark, there is a air leak in the coolant recovery system. Check hose or hose connections to the recovery container, outlet connector neck or the pressure cap seal at outlet connector for leaks.

COOLANT (Continued)

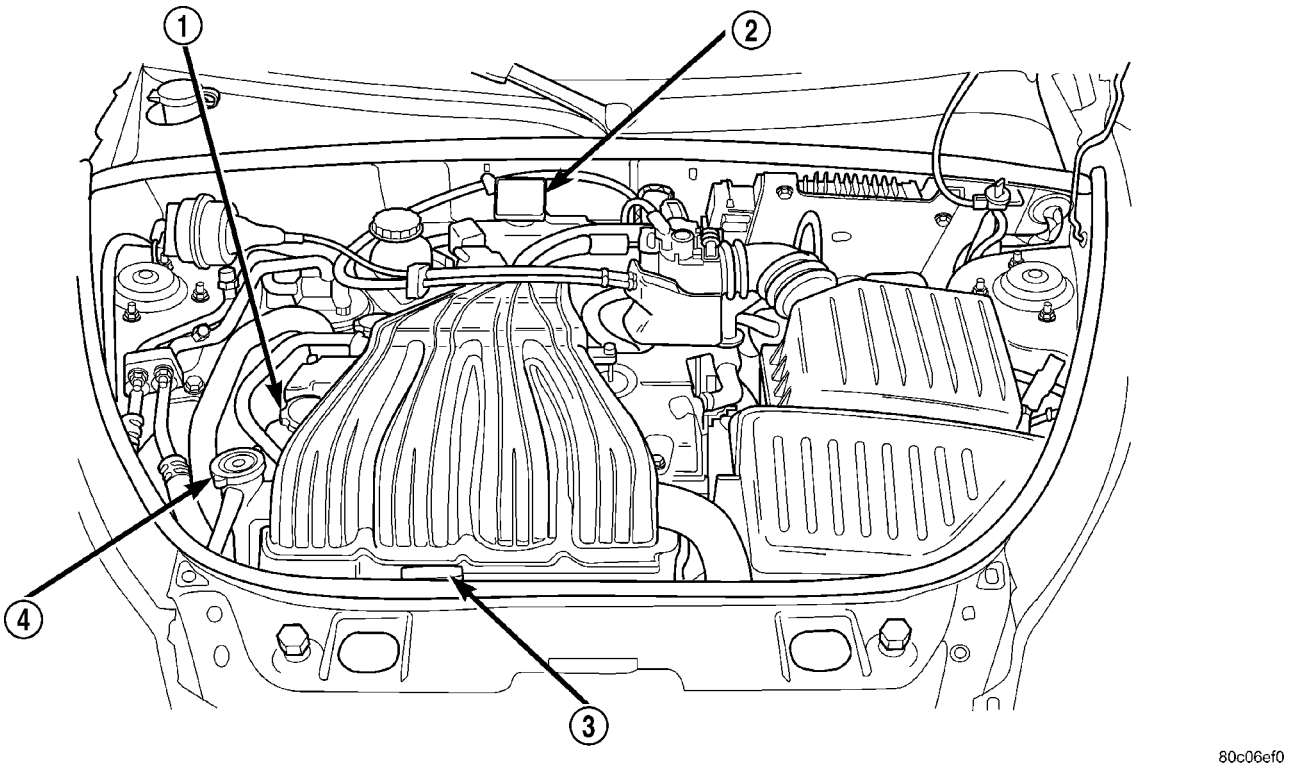

Fig. 9 Coolant Recovery Container and Pressure Cap

1 - ENGINE OIL FILL
2 - COOLANT RECOVERY CONTAINER
3 - ENGINE OIL DIPSTICK
4 - COOLANT PRESSURE CAP

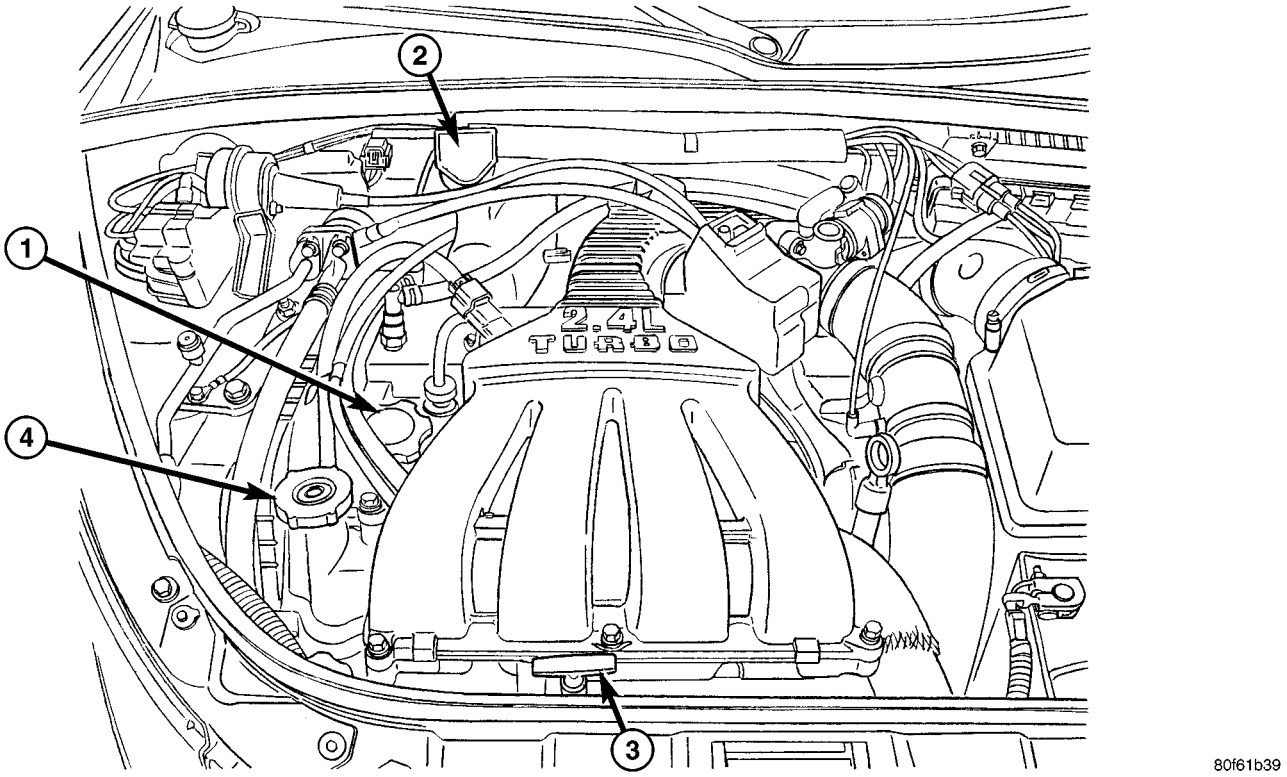

Fig. 10 Coolant Recovery Container and Pressure Cap - 2.4L Turbo

1 - ENGINE OIL FILL
2 - COOLANT RECOVERY CONTAINER
3 - ENGINE OIL DIPSTICK
4 - COOLANT PRESSURE CAP

COOLANT RECOVERY CONTAINER

DESCRIPTION

The coolant recovery system consists of a coolant recovery container mounted to the dash panel, a vent hose for the coolant recovery container, a hose connecting the container to the coolant outlet connector on the engine, and a pressure cap (Fig. 12) and (Fig. 14).

OPERATION

The system works in conjunction with the cooling system pressure cap to utilize thermal expansion and contraction of the coolant to keep the coolant free of trapped air. The system provides space for expansion and contraction. Also, the system provides a convenient and safe method for checking and adjusting the coolant level at atmospheric pressure without removing the pressure cap. It also provides some reserve coolant to compensate for minor leaks and evaporation or boiling losses.

REMOVAL

Non - Turbo

(1) Disconnect overflow hose from coolant outlet connector (Fig. 11).

(2) Remove vent hose clip from stud on dash panel (Fig. 12).

(3) Disconnect the MAP sensor connector.

(4) Remove fasteners securing power steering fluid reservoir bracket to engine. Reposition reservoir.

(5) Remove coolant recovery container attaching fasteners (Fig. 12).

(6) Remove coolant recovery container.

Turbo

(1) Disconnect overflow hose from coolant outlet connector (Fig. 13).

(2) Raise vehicle on hoist.

(3) Remove lower screw securing coolant recovery container to dash panel (Fig. 14).

(4) Lower vehicle.

(5) Remove throttle cable shield from throttle body.

(6) Disconnect throttle and speed control cables from throttle body. Reposition cables.

(7) Remove nut securing coolant recovery container to dash panel (Fig. 14).

(8) Remove coolant recovery container.

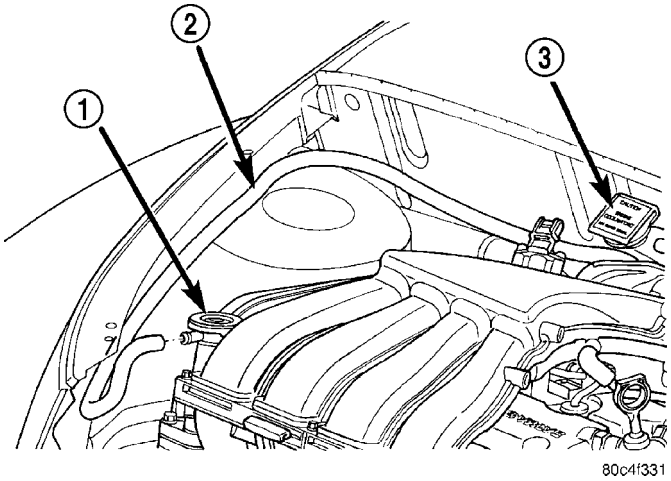

Fig. 11 Overflow Hose Routing

1 - PRESSURE CAP
2 - OVERFLOW HOSE
3 - COOLANT RECOVERY CONTAINER

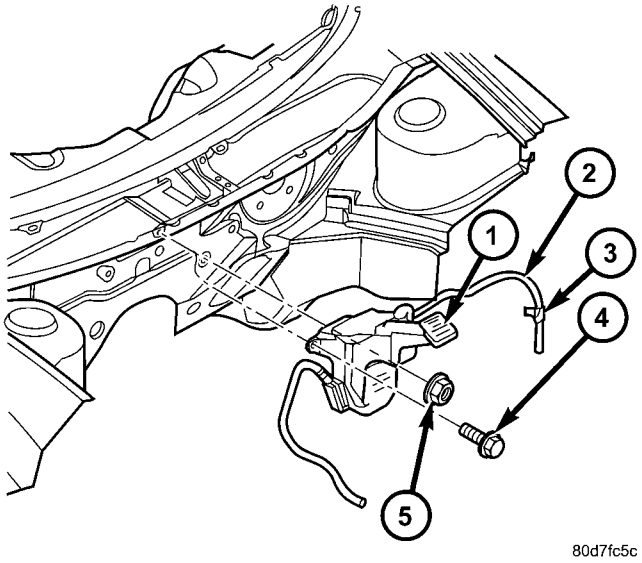

Fig. 12 Coolant Recovery Container

1 - COOLANT RECOVERY CONTAINER
2 - VENT HOSE
3 - CLIP
4 - SCREW
5 - NUT

INSTALLATION

Non - Turbo

(1) Install coolant recovery container and tighten fasteners to 4 N·m (35 in. lbs.) (Fig. 12).

(2) To ensure proper vent hose routing, install vent hose clip on stud at dash panel (Fig. 12).

(3) Connect the MAP sensor connector.

(4) Position and install the power steering fluid reservoir bracket fasteners.

COOLANT RECOVERY CONTAINER (Continued)

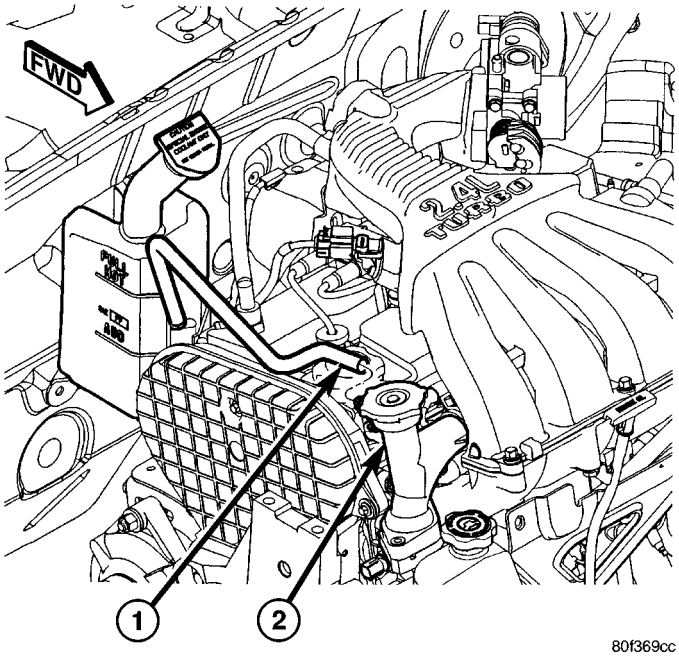

Fig. 13 Overflow Hose Routing - 2.4L Turbo

1 - OVERFLOW HOSE
2 - COOLANT OUTLET CONNECTOR

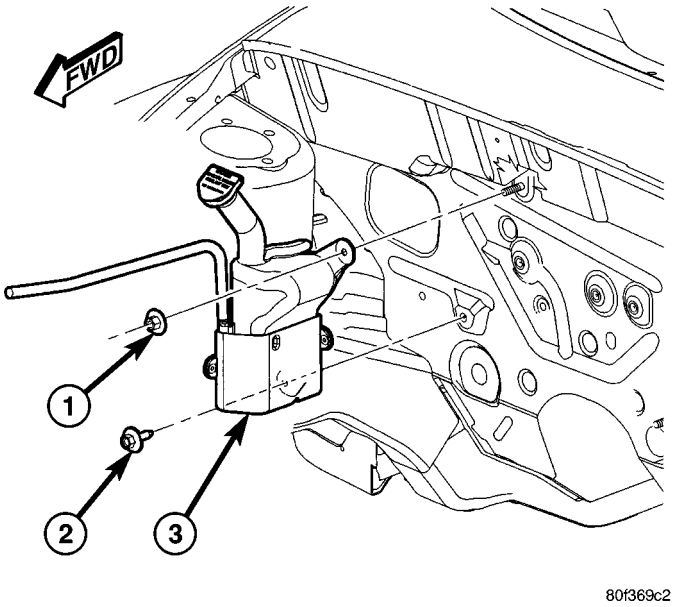

Fig. 14 Coolant Recovery Container - 2.4L Turbo

1 - NUT
2 - SCREW
3 - COOLANT RECOVERY CONTAINER

(5) Connect overflow hose to coolant outlet connector (Fig. 11).

(6) Fill container to proper level.

Turbo

(1) Install coolant recovery container and tighten fasteners to 4 N·m (35 in. lbs.) (Fig. 14).

(2) Connect throttle and speed control cables to throttle body.

(3) Install throttle cable shield to throttle body.

(4) Connect overflow hose to coolant outlet connector (Fig. 13).

(5) Fill container to proper level.

COOLING SYSTEM PRESSURE CAP

DESCRIPTION

The cooling system pressure cap (Fig. 15) is located on the coolant outlet connector near the front of the cylinder head. The pressure cap is constructed of stainless steel. Rubber seals provide sealing to the outlet connector and to the coolant recovery system. A calibrated spring located between the cap and the connector seal provides for cooling system pressure release.

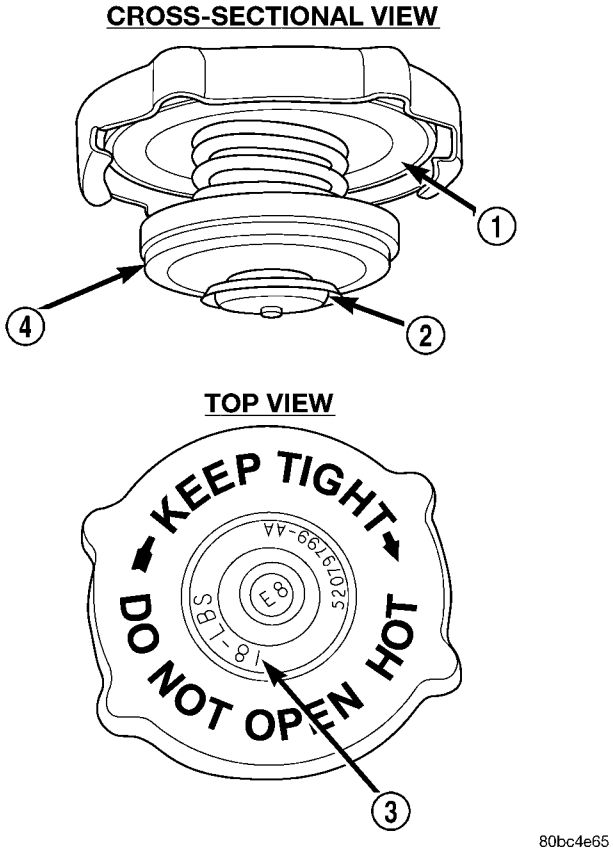

Fig. 15 Cooling System Pressure Cap

1 - FILLER NECK SEAL
2 - VACUUM VENT VALVE
3 - PRESSURE RATING
4 - PRESSURE VALVE

COOLING SYSTEM PRESSURE CAP (Continued)

OPERATION

The pressure cap allows the cooling system to operate at higher than atmospheric pressure. The higher pressure raises the coolant boiling point, allowing increased radiator cooling capacity. The pressure cap will release cooling system pressure in a range of 97–124 kPa (14–18 psi).

A vent valve located in the center of the cap allows a coolant flow to and from the coolant recovery system bottle. This valve is spring loaded in the closed position. However, it must be free to open during system cool-down. **If the valve is stuck shut, the radiator hoses will collapse on cool-down. Clean the vent valve (Fig. 15) to ensure proper sealing function.**

A gasket in the pressure cap seals the top of the filler neck so that vacuum is maintained to draw coolant back into the system from the coolant recovery system bottle.

DIAGNOSIS AND TESTING

DIAGNOSIS AND TESTING - COOLING SYSTEM PRESSURE CAP TESTING

Dip the pressure cap in water. Clean any deposits off the vent valve or its seat and apply cap to end of the Pressure Cap Test Adaptor that is included with the Cooling System Tester 7700 (Fig. 16). Working the plunger, bring the pressure to 104 kPa (15 psi) on the gauge. If the pressure cap fails to hold pressure of at least 97 kPa (14 psi), replace the pressure cap.

CAUTION: The Cooling System Tester Tool is very sensitive to small air leaks that will not cause cooling system problems. A pressure cap that does not have a history of coolant loss should not be replaced just because it leaks slowly when tested with this tool. Add water to the tool. Turn tool upside down and recheck pressure cap to confirm that cap is bad.

If the pressure cap tests properly while positioned on Cooling System Tester (Fig. 16), but will not hold pressure or vacuum when positioned on the filler neck. Inspect the filler neck and cap top gasket for irregularities that may prevent the cap from sealing properly.

DIAGNOSIS AND TESTING - COOLING SYSTEM PRESSURE RELIEF TESTING

WARNING: THE WARNING WORDS "DO NOT OPEN HOT" ON THE PRESSURE CAP IS A SAFETY PRECAUTION. WHEN HOT, THE COOLING SYSTEM BUILDS UP PRESSURE. TO PREVENT SCALDING OR OTHER INJURY, THE PRESSURE CAP SHOULD NOT BE REMOVED WHILE THE SYSTEM IS HOT AND/OR UNDER PRESSURE.

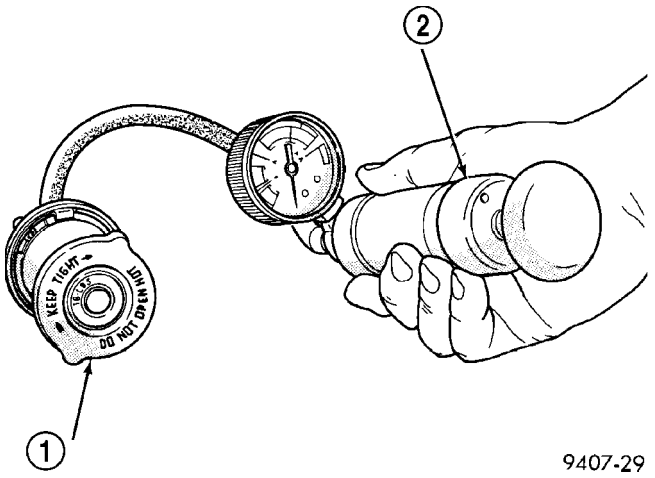

Fig. 16 Testing Cooling System Pressure Cap

1 - PRESSURE CAP
2 - PRESSURE TESTER

The pressure cap upper gasket to filler neck seal can be checked by removing the overflow hose at the filler neck overflow nipple (Fig. 17). Attach the radiator pressure tester to the **filler neck overflow nipple,** and pump air into the system. The pressure cap upper gasket should relieve pressure at 69-124 kPa (10-18 psi), and hold pressure at 55 kPa (8 psi) minimum.

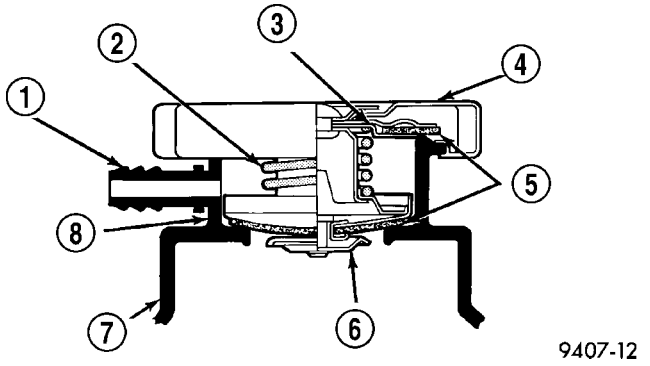

Fig. 17 Cooling System Pressure Cap to Filler Neck

1 - OVERFLOW NIPPLE
2 - MAIN SPRING
3 - GASKET RETAINER
4 - STAINLESS-STEEL SWIVEL TOP
5 - RUBBER SEALS
6 - VENT VALVE
7 - THERMOSTAT HOUSING/ENGINE OUTLET CONNECTOR
8 - FILLER NECK

There is no need to remove the pressure cap at any time **except** for the following purposes:

- Check and adjust coolant freeze point
- Refill system with new coolant
- Conducting service procedures
- Checking for leaks

COOLING SYSTEM PRESSURE CAP (Continued)

WARNING: IF VEHICLE HAS BEEN RUN RECENTLY, WAIT 15 MINUTES BEFORE REMOVING CAP. PLACE A SHOP TOWEL OVER THE CAP, AND WITHOUT PUSHING DOWN, ROTATE IT COUNTERCLOCKWISE TO THE FIRST STOP. ALLOW FLUIDS TO ESCAPE THROUGH THE OVERFLOW TUBE. WHEN THE SYSTEM STOPS PUSHING COOLANT AND STEAM INTO THE CRS TANK AND PRESSURE DROPS, PUSH DOWN ON THE CAP AND REMOVE IT COMPLETELY. SQUEEZING THE RADIATOR INLET HOSE WITH A SHOP TOWEL (TO CHECK PRESSURE) BEFORE AND AFTER TURNING TO THE FIRST STOP IS RECOMMENDED.

CLEANING

Use only a mild soap to clean the pressure cap.

INSPECTION

Hold the cap in your hand, **right side up** (Fig. 18). The vent valve at the bottom of the cap should open with a slight pull. If the rubber gasket has swollen, preventing the valve from opening, replace the cap.

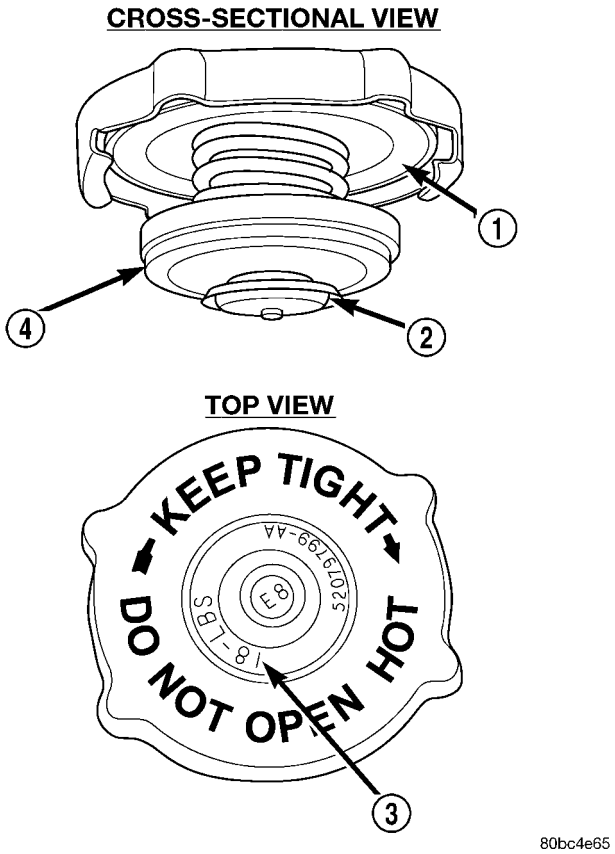

Fig. 18 Cooling System Pressure Cap - Typical

1 - FILLER NECK SEAL
2 - VACUUM VENT VALVE
3 - PRESSURE RATING
4 - PRESSURE VALVE

If any light can be seen between vent valve and the rubber gasket, replace the cap. **Use only a replacement cap that has a spring to hold the vent shut.**

A replacement cap must be of the type designed for coolant reserve systems. This design ensures system pressurization.

ENGINE BLOCK HEATER

DESCRIPTION

The heater is mounted in a core hole (in place of a core hole plug) in the engine block, with the heating element immersed in coolant (Fig. 19). The engine block heater is available as an optional accessory. The heater is powered by ordinary house current (110 Volt AC) through a power cord and connector (Fig. 20).

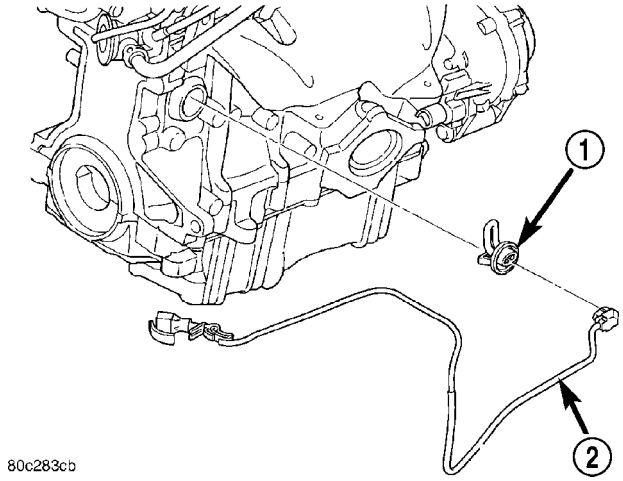

Fig. 19 Engine Block Heater

1 - BLOCK HEATER
2 - POWER CORD

OPERATION

When in operation, the engine block heater can provide easier engine starting and faster warm-up, when vehicle is operated in areas having extremely low temperatures.

CAUTION: The power cord must be secured in its retainer clips, and not positioned so it could contact linkages or exhaust manifolds and become damaged.

ENGINE BLOCK HEATER (Continued)

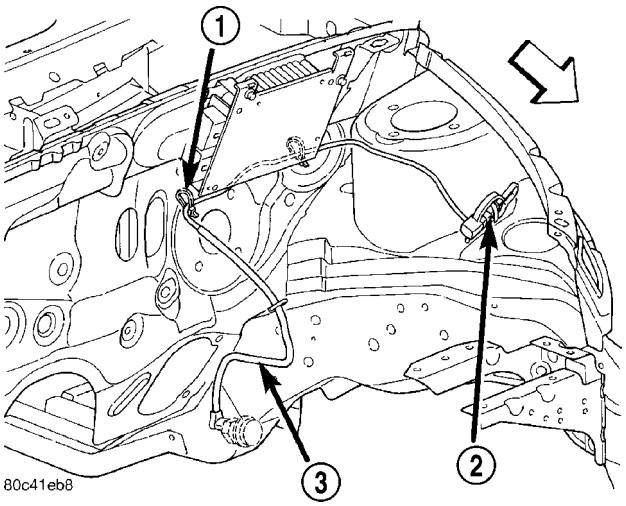

Fig. 20 Power Cord

1 - STRAP
2 - CONNECTOR
3 - POWER CORD

DIAGNOSIS AND TESTING

ENGINE BLOCK HEATER

If heater unit does not operate (Fig. 19), possible causes can be either the power cord or the heater element. Test the power cord for continuity with a 110-volt voltmeter or 110-volt test light. Test heater element continuity with an ohmmeter or a 12-volt test light.

CAUTION: To prevent damage, the power cord (Fig. 20)must be secured in its retainer clips and away from any components that may cause abrasion or damage, such as linkages, exhaust components, etc.

REMOVAL

(1) Drain the cooling system (Refer to 7 - COOLING/ENGINE - STANDARD PROCEDURE - DRAINING COOLING SYSTEM).

(2) Detach power cord plug from heater (Fig. 19).

(3) Loosen screw in center of heater. Remove heater assembly (Fig. 19).

(4) If required, remove power cord (Fig. 20).

INSTALLATION

(1) Thoroughly clean core hole and heater seat.

(2) Insert heater assembly with element loop positioned **upward (Fig. 19)**.

(3) With heater seated, tighten center screw securely to assure a positive seal.

(4) If removed, install power cord (Fig. 20).

NOTE: Ensure power cord is properly routed and secured with straps.

(5) Connect power cord to block heater (Fig. 19).

(6) Fill cooling system (Refer to 7 - COOLING/ENGINE - STANDARD PROCEDURE - FILLING COOLING SYSTEM).

ENGINE COOLANT TEMPERATURE SENSOR

DESCRIPTION

The engine coolant temperature (ECT) sensor threads into the thermostat housing just below the coolant outlet connector (Fig. 21) or (Fig. 22). New sensors have sealant applied to the threads.

The ECT Sensor is a Negative Thermal Coefficient (NTC) Sensor. The resistance of the ECT Sensor changes as coolant temperature changes. This results in different input voltages to the PCM. The PCM also uses the ECT Sensor input to operate the radiator cooling fan(s), and send a message over the PCI bus to the instrument cluster for temperature gauge operation.

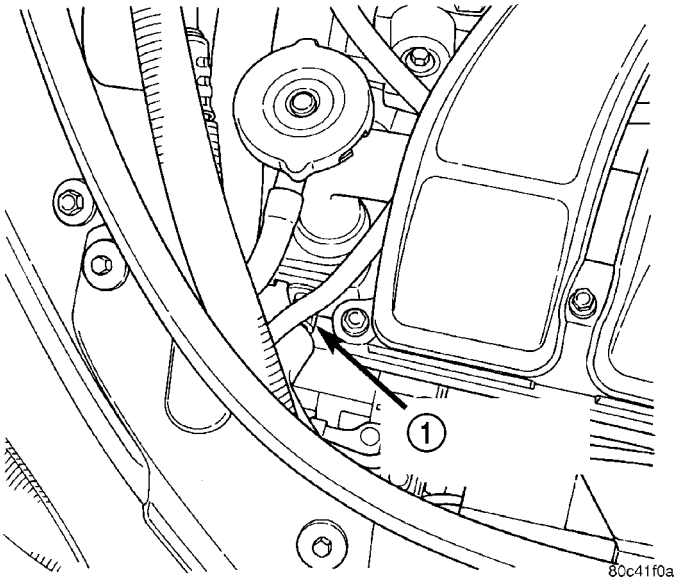

Fig. 21 Engine Coolant Temperature Sensor

1 - ENGINE COOLANT TEMPERATURE SENSOR

OPERATION

The ECT sensor provides an input to the PCM. As temperature increases, resistance of the sensor decreases. As coolant temperature varies, the ECT sensor resistance changes resulting in a different voltage value at the PCM ECT sensor signal circuit. The ECT sensor provides input for various PCM operations. The PCM uses the input to control air-fuel mixture, timing, and radiator fan on/off times. The PCM uses ECT sensor input to send messages over the PCI bus for temperature gauge operation.

ENGINE COOLANT TEMPERATURE SENSOR (Continued)

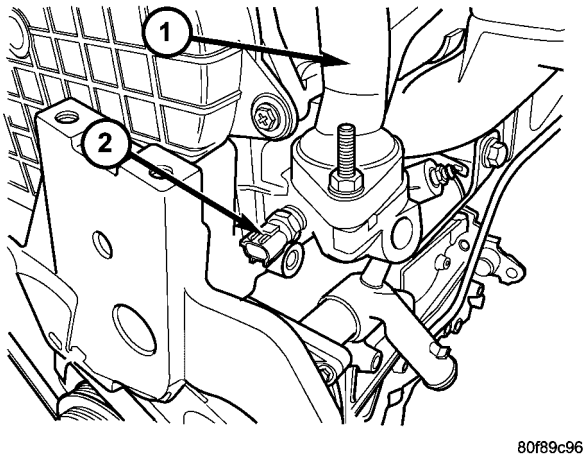

Fig. 22 Engine Coolant Temperature Sensor - 2.4L Turbo

1 - COOLANT OUTLET CONNECTOR
2 - ENGINE COOLANT TEMPERATURE SENSOR

REMOVAL

Non-Turbo

(1) Disconnect negative battery cable.
(2) Partially drain cooling system below level of ECT Sensor.
(3) Disconnect ECT Sensor electrical connector.
(4) Remove ECT Sensor (Fig. 21).

Turbo

(1) Disconnect negative battery cable.
(2) Partially drain cooling system below level of ECT Sensor.
(3) Remove upper torque strut (Refer to 9 - ENGINE/ENGINE MOUNTING/TORQUE STRUT - REMOVAL).
(4) Disconnect ECT Sensor electrical connector.
(5) Remove ECT Sensor (Fig. 22).

INSTALLATION

Non-Turbo

(1) Install ECT Sensor (Fig. 21). Torque sensor to 19 N·m (168 in. lbs.).
(2) Reconnect ECT Sensor electrical connector.
(3) Fill cooling system (Refer to 7 - COOLING/ENGINE - STANDARD PROCEDURE).
(4) Connect negative battery cable.

Turbo

(1) Install ECT Sensor (Fig. 22). Torque sensor to 19 N·m (168 in. lbs.).
(2) Reconnect ECT Sensor electrical connector.
(3) Install upper torque strut (Refer to 9 - ENGINE/ENGINE MOUNTING/TORQUE STRUT - INSTALLATION).
(4) Fill cooling system (Refer to 7 - COOLING/ENGINE - STANDARD PROCEDURE).
(5) Connect negative battery cable.

ENGINE COOLANT THERMOSTAT

DESCRIPTION

The thermostat is located on the front of the engine (radiator side) in the thermostat housing/coolant outlet connector (Fig. 23). The thermostat has an air bleed vent located on its flange (Fig. 24). The air bleed vent and the locator dimple on thermostat seal provide for proper positioning of thermostat in outlet connector. A cooling system air bleed valve is located in thermostat housing to assist in air removal when filling the cooling system.

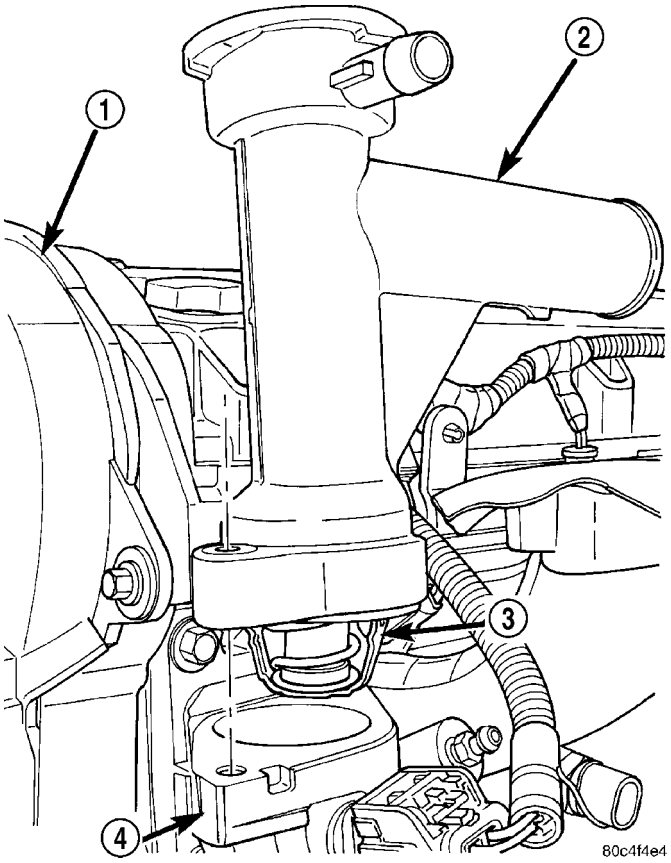

Fig. 23 Thermostat and Coolant Outlet Connector

1 - TIMING BELT COVER
2 - OUTLET CONNECTOR
3 - THERMOSTAT
4 - HOUSING

ENGINE COOLANT THERMOSTAT (Continued)

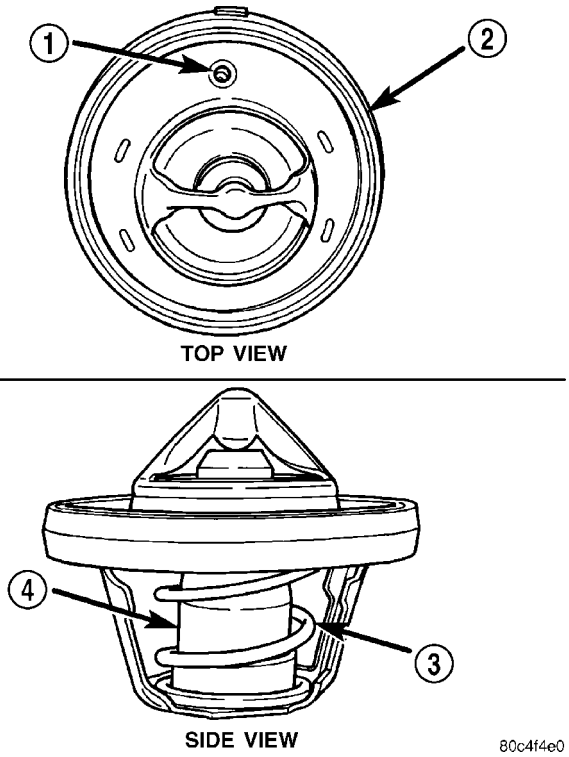

Fig. 24 Thermostat

1 - AIR BLEED
2 - SEAL
3 - RETURN SPRING
4 - PELLET CHAMBER

OPERATION

The engine cooling thermostat is a wax pellet driven, reverse poppet choke type. The thermostat is designed to provide the fastest warm up possible by preventing leakage through it and to guarantee a minimum engine operating temperature of 88 to 93°C (192 to 199°F). The thermostat will also automatically reach wide open so it will not restrict flow to the radiator as the temperature of the coolant rises in hot weather to around 104°C (220°F). Above this temperature the coolant temperature is controlled by the radiator, fan, and ambient temperature, not the thermostat.

The thermostat is operated by a wax filled chamber (pellet) which is sealed (Fig. 24). When coolant reaches a predetermined temperature, the wax expands enough to overcome the closing spring (Fig. 24) and water pump pressure, which forces the thermostat to open. Coolant leakage into the wax pellet will cause a thermostat to fail in the open position. Do not attempt to free-up a stuck open thermostat.

If the thermostat is stuck open or allows coolant leakage through it, the engine will not operate at the proper temperature for obtaining engine fuel efficiency, performance and emissions levels. If this condition occurs, a diagnostic trouble code will be set and a MIL light will be turned on. Refer to the Powertrain Diagnostic Procedures manual for further information and diagnostics provided.

DIAGNOSIS AND TESTING - ENGINE COOLANT THERMOSTAT

The thermostat is operated by a wax filled chamber (pellet) which is sealed. When heated coolant reaches a predetermined temperature the wax pellet expands enough to overcome the closing spring and water pump pressure, which forces the valve to open. Coolant leakage into the pellet will cause a thermostat to fail open. Do not attempt to free up a thermostat with a screwdriver.

Thermostat diagnostics is included in powertrain control module's (PCM) programing for on-board diagnosis. The malfunction indicator light (MIL) will illuminate and a diagnostic trouble code (DTC) will be set when an “open too soon” condition occurs. Do not change a thermostat for lack of heater performance or temperature gauge position, unless a DTC is present. For other probable causes, (Refer to 7 - COOLING/ENGINE - DIAGNOSIS AND TESTING). Thermostat failing shut is the normal long term mode of failure, and normally, only on high mileage vehicles. The temperature gauge will indicate this (Refer to 7 - COOLING/ENGINE - DIAGNOSIS AND TESTING).

REMOVAL

(1) Remove upper intake manifold (Refer to 9 - ENGINE/MANIFOLDS/INTAKE MANIFOLD - REMOVAL).

(2) Partially drain cooling system below the thermostat level.

(3) Disconnect upper radiator hose from outlet connector.

(4) Disconnect coolant recovery system hose from outlet connector.

(5) **Turbocharger equipped vehicles:**

- Remove fastener securing A/C suction line support bracket to coolant oulet connector stud.
- Unclip A/C suction line support bracket from A/C suction line. Reposition bracket.

(6) Remove coolant outlet connector bolts (Fig. 23).

(7) Remove thermostat assembly, and clean sealing surfaces.

INSTALLATION

(1) Place the new thermostat assembly into the coolant outlet connector, aligning air bleed with the location notch on outlet connector (Fig. 25).

(2) Install coolant outlet connector with thermostat in position onto thermostat housing (Fig. 23). Tighten bolts to 12.5 N·m (110 in. lbs.).

(3) **Turbocharger equipped vehicles:**

ENGINE COOLANT THERMOSTAT (Continued)

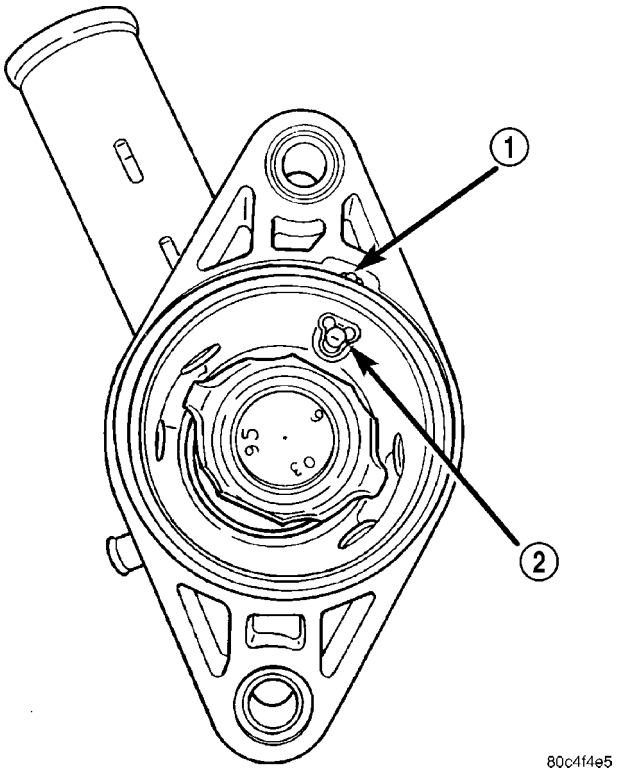

Fig. 25 Thermostat Position

1 - LOCATOR NOTCH
2 - AIR BLEED

- Attach A/C suction line support bracket to A/C suction line.
- Install fastener securing A/C suction line support bracket to coolant oulet connector.

(4) Connect upper radiator hose.

(5) Connect the coolant recovery system hose.

(6) Install upper intake manifold (Refer to 9 - ENGINE/MANIFOLDS/INTAKE MANIFOLD - INSTALLATION).

(7) Fill cooling system (Refer to 7 - COOLING/ENGINE - STANDARD PROCEDURE).

HOSE CLAMPS

DESCRIPTION - HOSE CLAMPS

The cooling system utilizes both worm drive and spring type hose clamps. If a spring type clamp replacement is necessary, replace with the original Mopar® equipment spring type clamp.

CAUTION: A number or letter is stamped into the tongue of constant tension clamps. If replacement is necessary, use only a original equipment clamp with matching number or letter (Fig. 26).

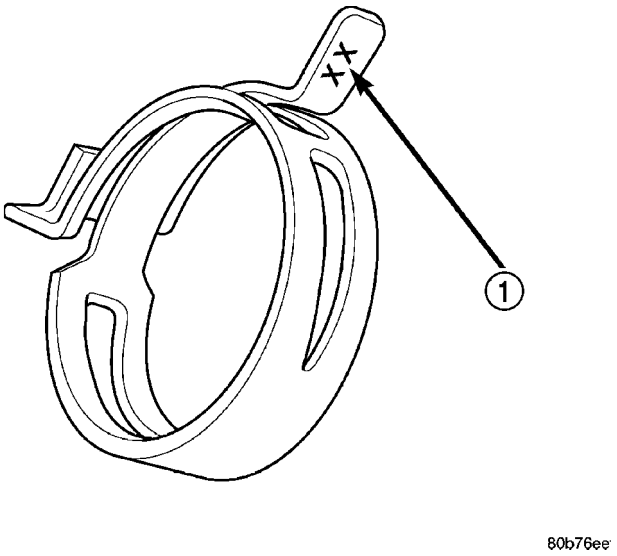

Fig. 26 Spring Clamp Size Location

1 - SPRING CLAMP SIZE LOCATION

OPERATION

The worm type hose clamp uses a specified torque value to maintain proper tension on a hose connection.

The spring type hose clamp applies constant tension on a hose connection. To remove a spring type hose clamp, only use constant tension clamp pliers (Special Tool 8495) designed to compress the hose clamp. For Special Tool Identification, (Refer to 7 - COOLING - SPECIAL TOOLS).

RADIATOR FAN

DESCRIPTION

Non-Turbo

The radiator cooling fan is a dual-speed electric motor driven fan. The radiator fan assembly includes an electric motor, fan blade, and a support shroud that is attached to the radiator (Fig. 31). The radiator fan is serviced as an assembly (fan motor/fan/shroud).

Turbo

The radiator cooling fan is a variable speed electric motor driven fan. The radiator fan assembly includes an electric motor, fan blade, and a support shroud that is attached to the radiator (Fig. 32). The radiator fan is serviced as an assembly (fan motor/fan/shroud).

RADIATOR FAN (Continued)

OPERATION

Non-Turbo

Radiator fan operation is control by the Powertrain Control Module (PCM) with inputs from the temperature of the coolant, which is sensed by the coolant temperature sensor, and vehicle speed which is measured by the vehicle speed sensor. The PCM turns on the fan through either the high or low speed fan relay. The PCM provides a ground to the relay's control circuit. The fan relays are located in the Power Distribution Center (PDC) (Fig. 27). Refer to the label beneath the PDC cover for location of fan relays.

Refer to **Radiator Fan Operation Chart** for fan operation specifications. For fan circuit wiring diagrams, refer to WIRING DIAGRAMS.

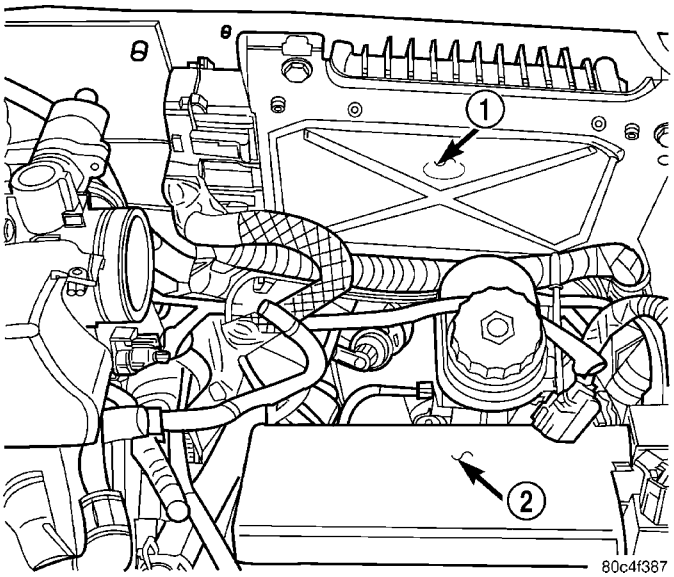

Fig. 27 Power Distribution Center (PDC)

1 - PCM
2 - PDC

If the cooling fan is inoperative or a Diagnostic Trouble Code (DTC) related to fan control has been set, refer to the appropriate Powertrain Diagnostic Information for diagnostic procedures.

RADIATOR FAN OPERATION CHART

Radiator Fan Control		
	Low Speed	**High Speed**
A/C Off *–vehicle speed < 70.8 km/h (44 mph)*		
Fan On:	96.6° C (206° F)	103° C (219° F)
Fan Off:	92.7° C (199° F)	98.8° C (210° F)
A/C Off *–vehicle speed > 70.8 km/h (44 mph) (until vehicle speed drops below 58 km/h (36 mph)*		
Fan On:	Off	103° C (219° F)
Fan Off:		98.8° C (210° F)
A/C On *–any vehicle speed*		
Fan On:	Off	82.2° C (180° F)
Fan Off:		80° C (176° F)

Turbo

The variable speed radiator fan is controlled by the Powertrain Control Module (PCM) by way of a Pulse Width Modulated (PWM) signal. The duty cycle ranges from 30% for low speed operation, then ramps-up to 100% for high speed operation. This fan control system provides infinitely variable fan speeds, allowing for improved fan noise, A/C performance, better engine cooling, and additional vehicle power.

To control radiator fan operation, the PCM looks at inputs from:

- Engine coolant temperature
- A/C pressure transducer
- Ambient temperature
- Vehicle speed
- Transmission oil temperature (automatic transmission only)

The PCM uses these inputs to determine when the fan should operate and at what speed.

RADIATOR FAN (Continued)

DIAGNOSIS AND TESTING

RADIATOR FAN MOTOR TEST

Refer to Powertrain Diagnostic Manual for procedure.

REMOVAL

NOTE: The fan motor, fan, and the shroud are serviced as an assembly.

WARNING: DO NOT OPEN THE RADIATOR DRAINCOCK WITH THE SYSTEM HOT AND UNDER PRESSURE BECAUSE SERIOUS BURNS FROM COOLANT CAN OCCUR.

(1) Disconnect negative cable from battery.

(2) Remove battery and battery tray (Refer to 8 - ELECTRICAL/BATTERY SYSTEM/BATTERY - REMOVAL).

(3) Drain cooling system below upper radiator hose level (Refer to 7 - COOLING/ENGINE - STANDARD PROCEDURE).

(4) Remove grille (Refer to 23 - BODY/EXTERIOR/GRILLE - REMOVAL).

(5) Remove upper radiator closure panel and center brace (Refer to 23 - BODY/EXTERIOR/RADIATOR CLOSURE PANEL - REMOVAL) (Fig. 28).

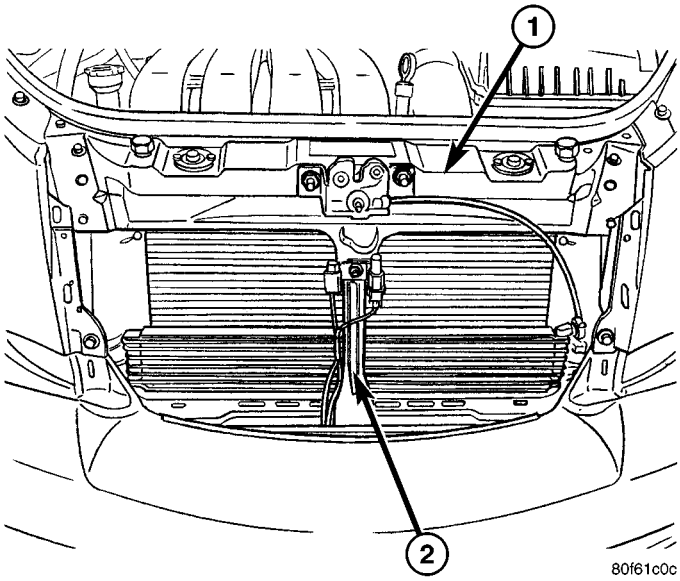

Fig. 28 Upper Radiator Closure Panel and Center Brace

1 - UPPER RADIATOR CLOSURE PANEL
2 - CENTER BRACE

(6) Disconnect upper radiator hose from radiator.

(7) **Turbocharger equipped vehicles:** Remove radiator inlet neck (Fig. 29).

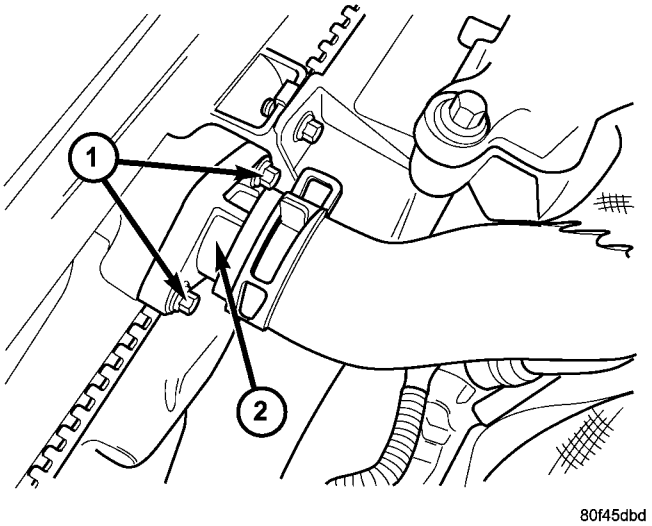

Fig. 29 Radiator Inlet Neck - 2.4L Turbo

1 - FASTENERS
2 - RADIATOR INLET NECK

(8) Hoist vehicle.

(9) Disconnect radiator fan electrical connector (Fig. 30).

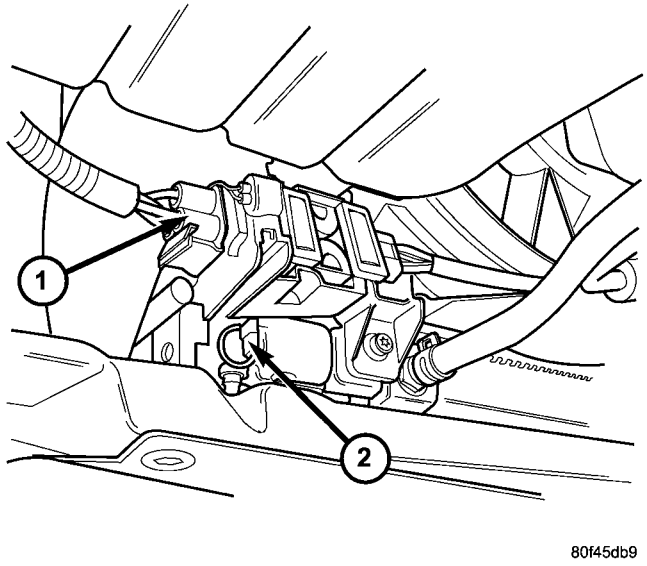

Fig. 30 Radiator Fan Connector - 2.4L Turbo

1 - RADIATOR FAN CONNECTOR
2 - RADIATOR DRAINCOCK

(10) Remove the two lower and left side radiator fan screws (Fig. 31) and (Fig. 32).

(11) Lower vehicle and remove the remaining radiator fan attaching screws.

CAUTION: Care should be taken not to damage the radiator cooling fins and tubes during fan removal.

RADIATOR FAN (Continued)

(12) Remove radiator fan by lifting up from the engine compartment.

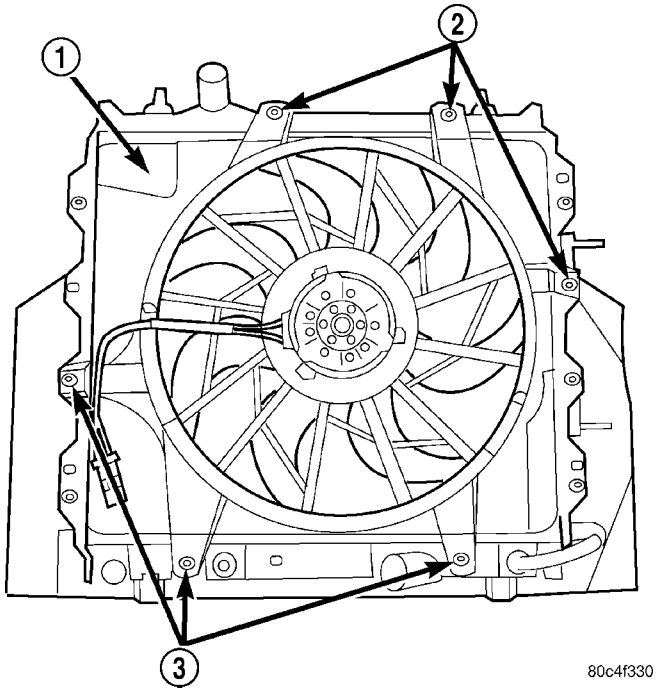

Fig. 31 Radiator Fan - Mounting

1 - RADIATOR FAN SHROUD
2 - SCREWS
3 - SCREWS

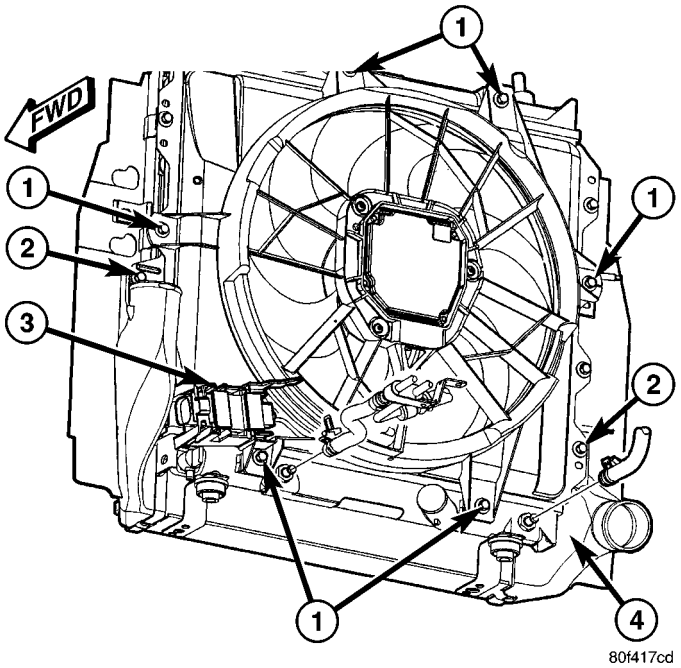

Fig. 32 Cooling Module - 2.4L Turbo

1 - RADIATOR FAN FASTENERS
2 - CHARGE AIR COOLER FASTENERS
3 - RADIATOR FAN CONNECTOR
4 - CHARGE AIR COOLER

INSTALLATION

(1) Install the radiator fan into position on the radiator.

(2) Hand start all radiator fan fasteners.

(3) Tighten all radiator fan retaining screws to 6 N·m (55 in. lbs.) (Fig. 31) and (Fig. 32).

(4) Connect radiator fan electrical connector (Fig. 30).

(5) Lower vehicle.

(6) **Turbocharger equipped vehicles:** Inspect radiator inlet neck o-ring. Replace if necessary. Install radiator inlet neck (Fig. 29). Torque fasteners to 6 N·m (55 in. lbs.).

(7) Connect the upper radiator hose to radiator. Align hose and position clamp so it will not interfere with the engine or the hood.

(8) Install upper radiator closure panel and center brace (Refer to 23 - BODY/EXTERIOR/RADIATOR CLOSURE PANEL - INSTALLATION) (Fig. 28).

(9) Install grille (Refer to 23 - BODY/EXTERIOR/GRILLE - INSTALLATION).

(10) Install battery tray and battery.

(11) Connect cables to battery.

(12) Fill cooling system (Refer to 7 - COOLING/ENGINE - STANDARD PROCEDURE).

RADIATOR

REMOVAL

WARNING: DO NOT OPEN THE RADIATOR DRAIN-COCK WITH THE SYSTEM HOT AND UNDER PRESSURE BECAUSE SERIOUS BURNS FROM COOLANT CAN OCCUR.

NOTE: It is not necessary to discharge the air conditioning system to remove the radiator.

(1) Drain cooling system (Refer to 7 - COOLING/ENGINE - STANDARD PROCEDURE).

(2) Remove radiator fan (Refer to 7 - COOLING/ENGINE/RADIATOR FAN - REMOVAL).

(3) **Turbocharger Equipped Vehicles:** Disconnect and cap the power steering hoses.

(4) Disconnect lower radiator hose (Fig. 33).

(5) **Non-Turbo Vehicles with Automatic Transmission:** Remove two fasteners attaching transmission oil cooler to radiator.

(6) **Non-Turbo Vehicles:** Dislodge lower radiator air seal from side radiator air seals (Fig. 34).

(7) Remove fasteners attaching AC condenser to radiator. Reposition AC condenser.

(8) **Turbocharger Equipped Vehicles:** Remove fasteners attaching charge air cooler to radiator (Fig. 35).

RADIATOR (Continued)

(9) Remove radiator assembly (Fig. 36) by lifting it up from the engine compartment. **Care should be taken not to damage the cooling fins and tubes during removal.**

(10) **Non-Turbo Vehicles:** Remove the lower air seal from radiator (Fig. 34).

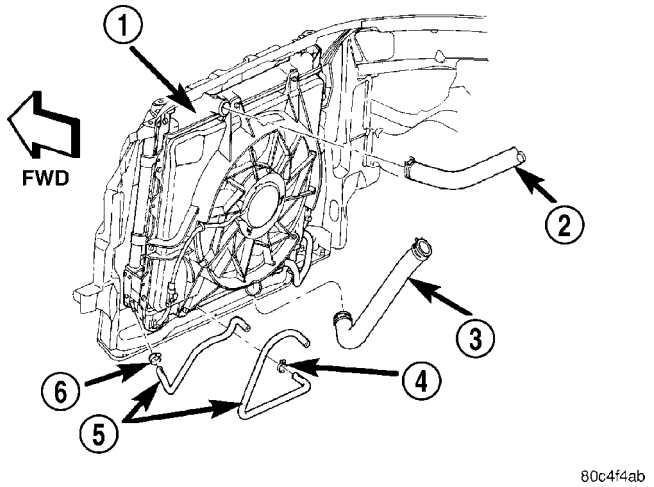

Fig. 33 Radiator Hose Connections

1 - RADIATOR
2 - RADIATOR UPPER HOSE
3 - RADIATOR LOWER HOSE
4 - CLAMP
5 - TRANSMISSION OIL COOLER HOSES
6 - CLAMP

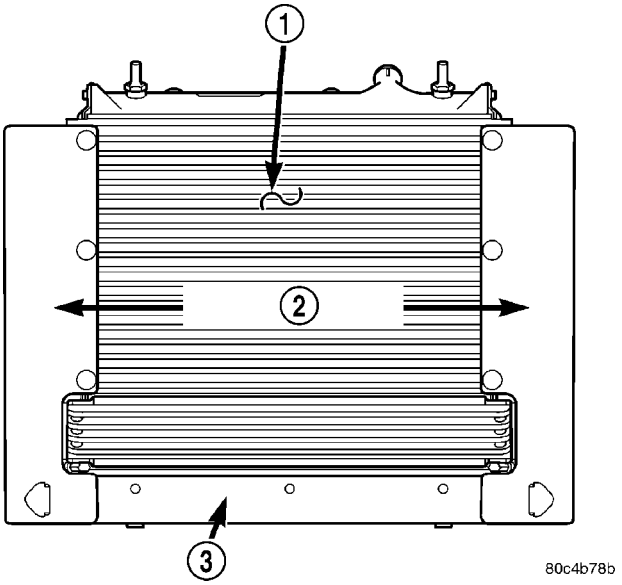

Fig. 34 Air Seals

1 - A/C CONDENSER
2 - SIDE AIR SEALS
3 - LOWER AIR SEAL

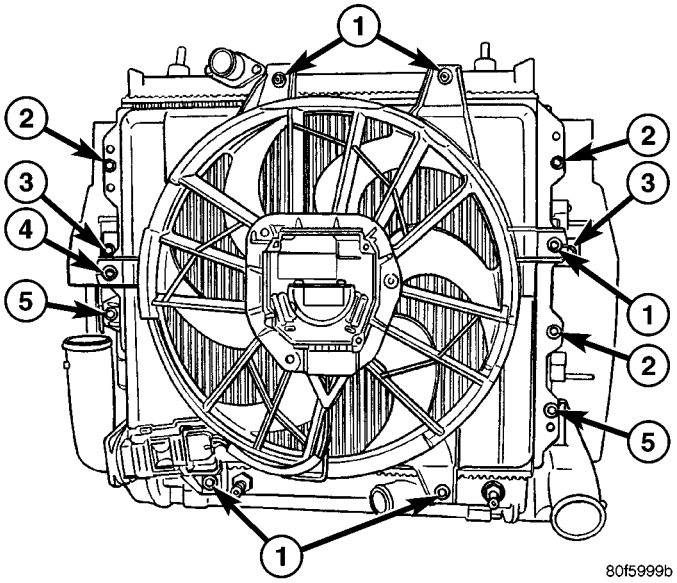

Fig. 35 Cooling Module Fasteners - 2.4L Turbo

1 - RADIATOR FAN FASTENERS
2 - CONDENSER FASTENERS
3 - TRANSMISSION OIL COOLER FASTENERS
4 - RADIATOR FAN/CONDENSER FASTENER
5 - CHARGE AIR COOLER FASTENERS

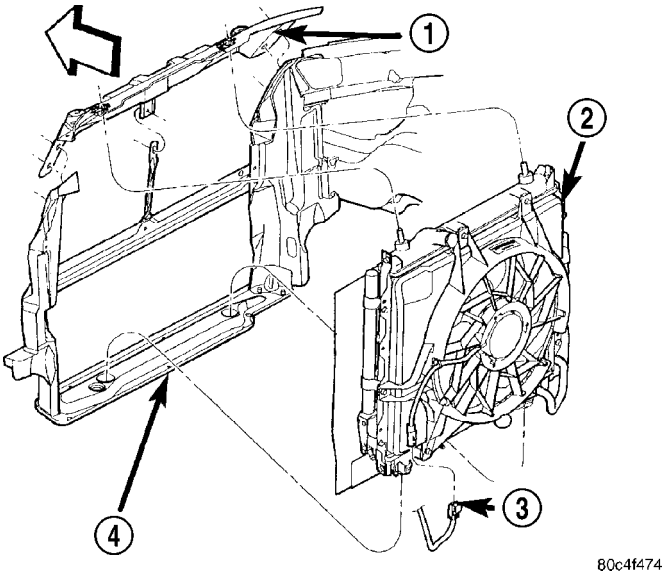

Fig. 36 Cooling Module Assembly

1 - UPPER RADIATOR CLOSURE PANEL
2 - COOLING MODULE
3 - RADIATOR FAN CONNECTOR
4 - LOWER RADIATOR CROSSMEMBER

RADIATOR (Continued)

CLEANING

Clean radiator fins are necessary for good heat transfer. The radiator and air conditioning fins should be cleaned when an accumulation of debris has occurred. With the engine cold, apply cold water and compressed air to the back (engine side) of the radiator to flush the radiator and/or A/C condenser of debris.

INSPECTION

Inspect the radiator tanks for cracks, broken or missing fittings also inspect the joint where the tanks seam up to the radiator core for signs of leakage and/or deteriorating seals.

Inspect radiator core for corroded, bent or missing cooling fins. Inspect the core for bent or damaged cooling tubes.

INSTALLATION

(1) **Non-Turbo Vehicles:** Install the lower air seal to radiator (Fig. 34).

NOTE: Turbocharger Equipped Vehicles: When lowering radiator, make sure lower radiator pins engage properly through charge air cooler locating tabs (Fig. 37).

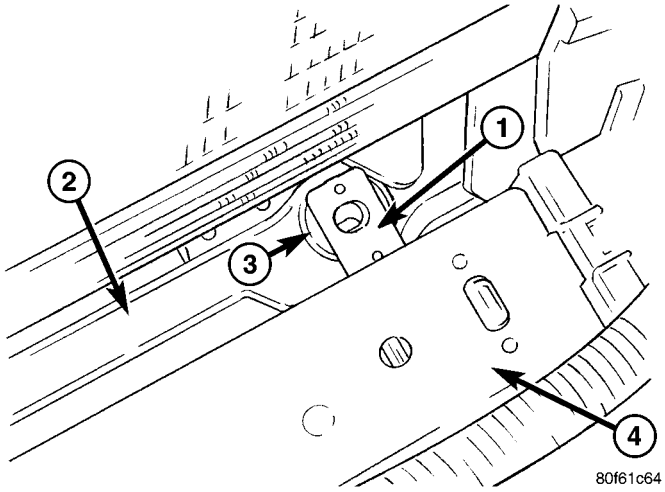

Fig. 37 Charge Air Cooler Locating Tab

1 - LOCATING TAB
2 - LOWER RADIATOR SUPPORT CROSSMEMBER
3 - RADIATOR MOUNT BUSHING
4 - CHARGE AIR COOLER

(2) Position radiator into mounting position.

(3) Position A/C condenser against radiator. Hand start fasteners.

(4) **Turbocharger Equipped Vehicles:** Install fasteners attaching charge air cooler to radiator. Torque fasteners to 8 N·m (70 in. lbs.) (Fig. 35).

(5) Install radiator fan/shroud assembly. Hand start fasteners.

(6) Torque all condenser fasteners to 8 N·m (70 in. lbs.).

(7) Torque all radiator fan fasteners to 6 N·m (55 in. lbs.).

(8) **Non-Turbo Vehicles with Automatic Transmission:** Install fasteners attaching transmission oil cooler to radiator. Torque fasteners to 8 N·m (70 in. lbs.).

(9) Raise vehicle on hoist.

(10) **Non-Turbo Vehicles:** Connect the lower air seal to the side air seals (Fig. 34).

(11) Connect lower radiator hose (Fig. 33). Align the hose and position the clamp so it will not interfere with engine components.

(12) Connect the radiator fan electrical connector.

(13) **Turbocharger Equipped Vehicles:** Connect the power steering hoses.

(14) Close radiator draincock.

(15) Lower vehicle.

(16) **Turbocharger equipped vehicles:** Inspect radiator inlet neck o-ring. Replace if necessary. Install radiator inlet neck. Torque fasteners to 6 N·m (55 in. lbs.).

(17) Connect upper radiator hose (Fig. 33). Align the hose and position the clamp to prevent interference with the engine or hood.

(18) Install upper radiator closure panel and center brace (Refer to 23 - BODY/EXTERIOR/RADIATOR CLOSURE PANEL - INSTALLATION).

(19) Install grille (Refer to 23 - BODY/EXTERIOR/GRILLE - INSTALLATION).

(20) Install battery tray and battery.

(21) Connect positive battery cable. Connect negative battery cable.

(22) Install air cleaner housing assembly.

(23) Fill cooling system with coolant (Refer to 7 - COOLING/ENGINE - STANDARD PROCEDURE).

(24) Operate engine until it reaches normal operating temperature. Check cooling system for correct fluid level.

(25) **Turbocharger Equipped Vehicles:** Check power steering fluid level. Fill as needed.

RADIATOR DRAINCOCK

REMOVAL

CAUTION: Use of pliers on draincock is not recommended. Damage may occur to radiator or draincock.

NOTE: It is not necessary to remove draincock during a routine coolant drain.

RADIATOR DRAINCOCK (Continued)

(1) Drain the cooling system (Refer to 7 - COOLING/ENGINE - STANDARD PROCEDURE).

(2) Open the draincock by turning it counterclockwise until it stops.

(3) Turn the draincock back (clockwise) 1/8 turn.

(4) Pull the draincock (Fig. 38) from the radiator tank.

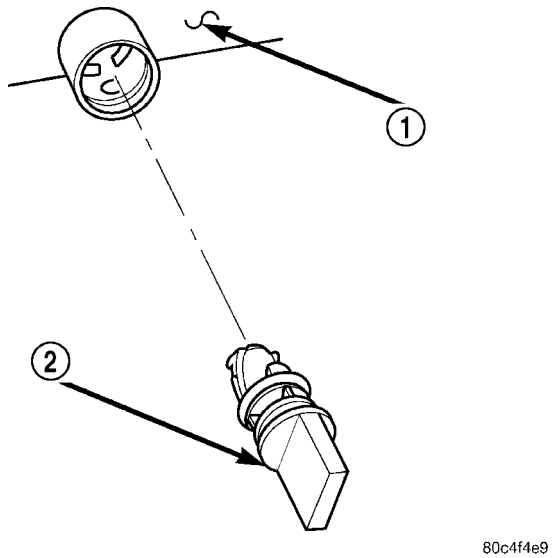

Fig. 38 Draincock

1 - RADIATOR TANK
2 - DRAINCOCK

INSTALLATION

(1) Align draincock stem to radiator tank opening.

(2) Push draincock into the radiator tank opening.

(3) Tighten the draincock by turning clockwise until it stops.

(4) Fill the cooling system (Refer to 7 - COOLING/ENGINE - STANDARD PROCEDURE).

THERMOSTAT HOUSING

REMOVAL

(1) Disconnect negative battery cable.

(2) Drain cooling system below thermostat housing level (Refer to 7 - COOLING/ENGINE - STANDARD PROCEDURE).

(3) Remove thermostat (Refer to 7 - COOLING/ENGINE/ENGINE COOLANT THERMOSTAT - REMOVAL).

(4) Disconnect engine coolant temperature sensor.

(5) Disconnect heater supply hose.

(6) **Turbocharger equipped vehicles:**

• Recover the refrigerant from the refrigerant system(Refer to 24 - HEATING & AIR CONDITIONING - STANDARD PROCEDURE).

• Disconnect A/C suction line from A/C compressor (Refer to 24 - HEATING & AIR CONDITIONING/PLUMBING/SUCTION LINE - REMOVAL).

(7) Remove housing attaching bolts (Fig. 39).

(8) Remove housing and gasket (Fig. 39).

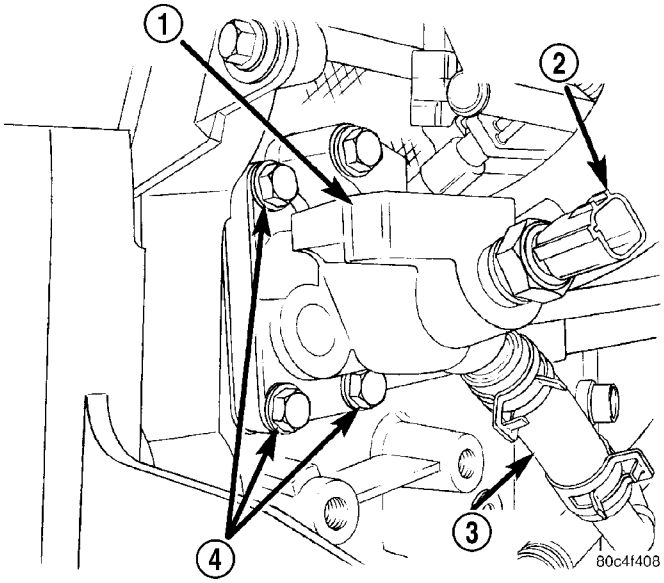

Fig. 39 Thermostat Housing

1 - THERMOSTAT HOUSING
2 - COOLANT TEMPERATURE SENSOR
3 - HOSE-HEATER SUPPLY
4 - BOLTS

INSTALLATION

(1) Clean all gasket sealing surfaces.

(2) Install gasket and housing (Fig. 39). Tighten bolts to 28 N·m (20 ft. lbs.).

(3) **Turbocharger equipped vehicles:**

• Connect A/C suction line to A/C compressor (Refer to 24 - HEATING & AIR CONDITIONING/PLUMBING/SUCTION LINE - INSTALLATION).

• Evacuate the refrigerant system(Refer to 24 - HEATING & AIR CONDITIONING - STANDARD PROCEDURE).

• Charge the refrigerant system(Refer to 24 - HEATING & AIR CONDITIONING - STANDARD PROCEDURE).

(4) Connect heater supply hose.

(5) Connect engine coolant temperature sensor.

(6) Install thermostat (Refer to 7 - COOLING/ENGINE/ENGINE COOLANT THERMOSTAT - INSTALLATION).

(7) Fill cooling system (Refer to 7 - COOLING/ENGINE - STANDARD PROCEDURE).

(8) Connect negative battery cable.

WATER PUMP

DIAGNOSIS AND TESTING

WATER PUMP

A quick flow test to determine if the water pump is working effectively is to check heater system for proper operation. A defective pump will not provide an adequate flow of heated coolant through the system.

WARNING: DO NOT REMOVE THE COOLING SYSTEM PRESSURE CAP WITH THE SYSTEM HOT AND UNDER PRESSURE BECAUSE SERIOUS BURNS FROM COOLANT CAN OCCUR.

Another flow test to help determine water pump operation is as follows:

(1) Remove cooling system pressure cap.

(2) Remove a small amount of coolant from the system.

(3) Start the engine and warm up until thermostat opens.

(4) With the thermostat open and coolant level low, visually inspect for coolant flow. If flow is present, the water pump is pumping coolant through the system.

REMOVAL

(1) Drain cooling system (Refer to 7 - COOLING/ENGINE - STANDARD PROCEDURE).

(2) Remove timing belt (Refer to 9 - ENGINE/VALVE TIMING/TIMING BELT AND SPROCKETS - REMOVAL).

(3) Remove camshaft sprockets and rear timing belt cover (Refer to 9 - ENGINE/VALVE TIMING/TIMING BELT AND SPROCKETS - REMOVAL).

(4) Remove screws attaching water pump to engine. Remove pump (Fig. 40).

INSPECTION

Replace water pump body assembly if it has any of these defects:

(1) Cracks or damage on the body.

(2) Coolant leaks from the shaft seal, evident by wet coolant traces on the pump body.

(3) Loose or rough turning bearing.

(4) Impeller rubs either the pump body or the engine block.

(5) Impeller loose or damaged.

(6) Sprocket or sprocket flange loose or damaged.

INSTALLATION

(1) Apply Mopar® Dielectric Grease to new O-ring before installation (Fig. 41).

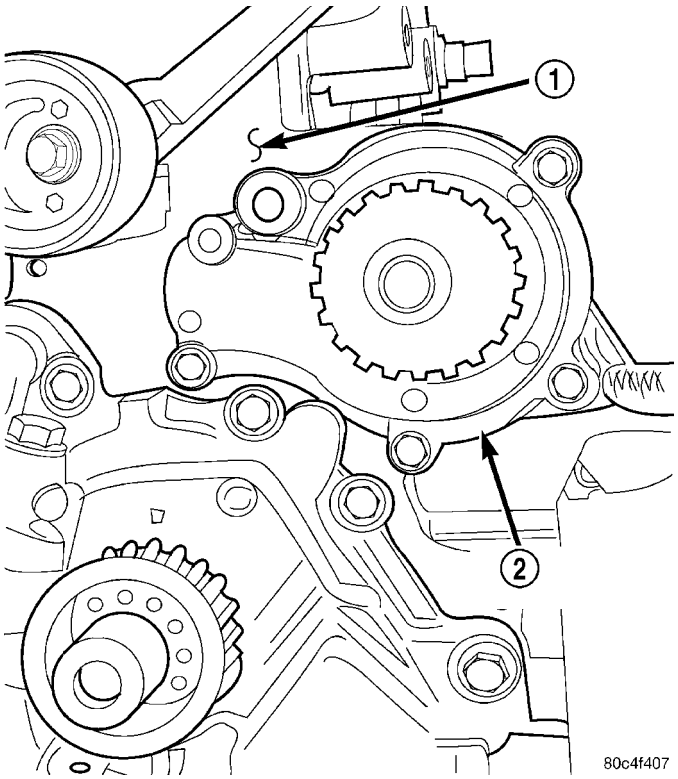

Fig. 40 Water Pump

1 - CYLINDER BLOCK
2 - WATER PUMP

(2) Install O-ring gasket in water pump body groove (Fig. 41).

CAUTION: Make sure O-ring gasket is properly seated in water pump groove before tightening screws. An improperly located O-ring may cause damage to the O-ring, resulting in a coolant leak.

(3) Assemble pump body to block (Fig. 40) and tighten screws to 12 N·m (105 in. lbs.).

(4) Rotate pump by hand to check for freedom of movement.

(5) Fill cooling system (Refer to 7 - COOLING/ENGINE - STANDARD PROCEDURE). Pressurize cooling system to 103 Kpa (15 psi) with pressure tester and check water pump shaft seal and O-ring for leaks.

(6) Install rear timing belt cover and camshaft sprockets (Refer to 9 - ENGINE/VALVE TIMING/TIMING BELT AND SPROCKETS - INSTALLATION).

(7) Install timing belt (Refer to 9 - ENGINE/VALVE TIMING/TIMING BELT AND SPROCKETS - INSTALLATION).

WATER PUMP (Continued)

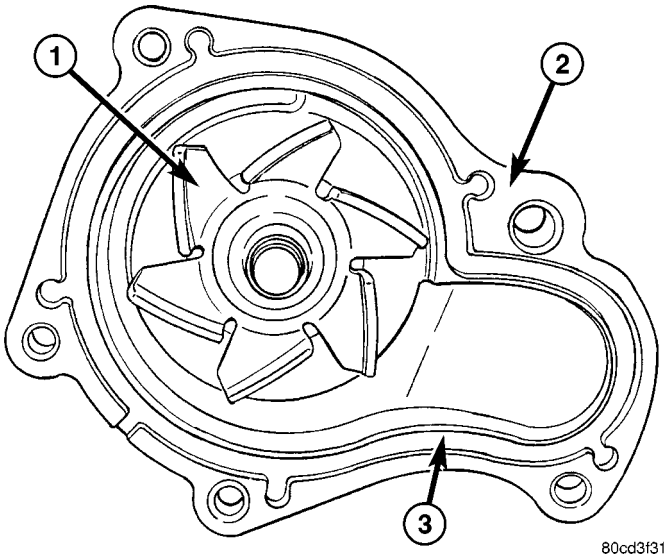

Fig. 41 Water Pump Body

1 - IMPELLER
2 - WATER PUMP BODY
3 - O-RING LOCATING GROOVE

WATER PUMP INLET TUBE

REMOVAL

The water pump inlet tube connects the water pump to the radiator and heater core. This tube is sealed by an O-ring and held in place by fasteners to the block.

CAUTION: Do not use any sharp tools to remove hoses from inlet tube. This may cause the tube to leak.

(1) Drain cooling system (Refer to 7 - COOLING/ENGINE - STANDARD PROCEDURE).

(2) Remove upper radiator closure panel and center brace (Refer to 23 - BODY/EXTERIOR/RADIATOR CLOSURE PANEL - REMOVAL).

(3) Remove lower radiator hose and heater return hose from the inlet tube (Fig. 42).

(4) Remove the inlet tube to block bolts (Fig. 42).

(5) Rotate tube while removing from the engine block (Fig. 43).

INSTALLATION

(1) Inspect the O-ring for damage before installing the tube (Fig. 43). Replace O-ring as necessary.

(2) Lubricate O-ring with Mopar® Dielectric Grease and install inlet tube into the cylinder block opening (Fig. 43).

(3) Install inlet tube bolts and tighten to 12 N·m (105 in. lbs.) (Fig. 42).

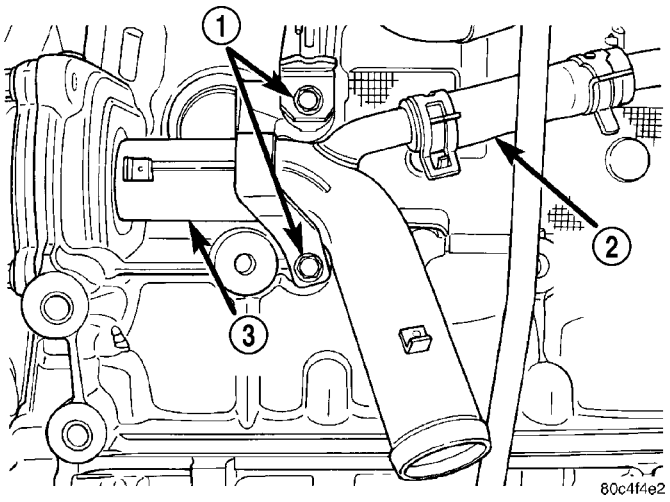

Fig. 42 Water Pump Inlet Tube Fasteners

1 - BOLTS
2 - HOSE - HEATER RETURN
3 - WATER PUMP INLET TUBE

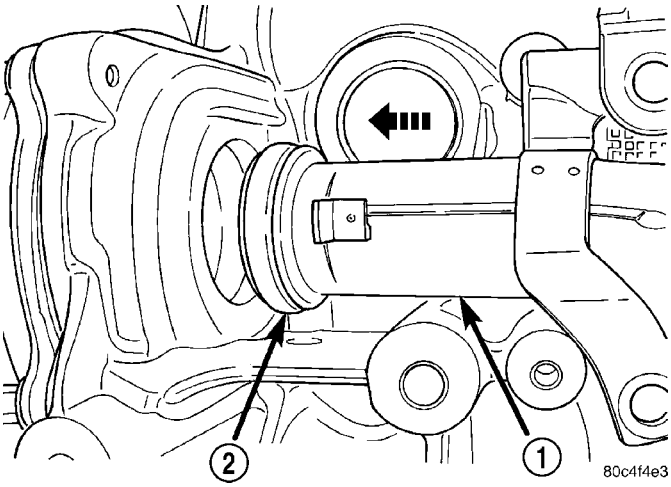

Fig. 43 Water Pump Inlet Tube—Installation

1 - TUBE
2 - O-RING

(4) Connect lower radiator hose and heater return hose to inlet tube (Fig. 42).

(5) Install upper radiator closure panel and center brace (Refer to 23 - BODY/EXTERIOR/RADIATOR CLOSURE PANEL - INSTALLATION).

(6) Fill cooling system (Refer to 7 - COOLING/ENGINE - STANDARD PROCEDURE).

(7) Pressure test system to 103 kPa (15 psi) and check for leaks.

TRANSMISSION

TABLE OF CONTENTS

	page
TRANSMISSION COOLER HOSES	
DESCRIPTION	61
AUTOMATIC TRANSMISSION OIL COOLER	
DESCRIPTION	61
REMOVAL	61
CLEANING	62
INSPECTION	63
INSTALLATION	63

TRANSMISSION COOLER HOSES

DESCRIPTION

The transmission oil cooling circuit uses special aggressive fittings for the transmission oil cooler hoses. Whenever a transmission oil cooler hose is removed from a transmission fitting (at transmission), it must be cut off flush with the fitting, and a service splice kit must be used upon reassembly. Refer to instructions provided with splice kit. Whenever a transmission oil cooler hose is removed from a transmission oil cooler fitting (at radiator), it must be replaced with a new hose. Removing the hose from the aggressive fitting will scrape material from inside the hose making the hose larger. Failure to replace the hose or install a service splice kit will result in transmission oil leaks.

When hose clamp replacement is necessary, replace with constant tension spring type hose clamps. Always use proper hose clamp pliers on clamps. Use of improper hose clamp pliers may bend hose clamps out-of-round resulting in transmission oil leaks.

AUTOMATIC TRANSMISSION OIL COOLER

DESCRIPTION

Non - Turbo

The automatic transmission oil cooler consists of an external air-to-oil type mounted in front of the radiator (Fig. 1). Rubber hoses connect the oil coolers to the automatic transmission. Use only approved transmission oil cooler hoses and clamps for replacement. The hoses are molded to the fit space available.

Turbo

The automatic transmission oil cooler consists of an external air-to-oil type mounted in front of the air conditioning condenser (Fig. 2). Rubber hoses connect the oil cooler to the automatic transmission. Use only approved transmission oil cooler hoses and clamps for replacement. The hoses are molded to the fit space available.

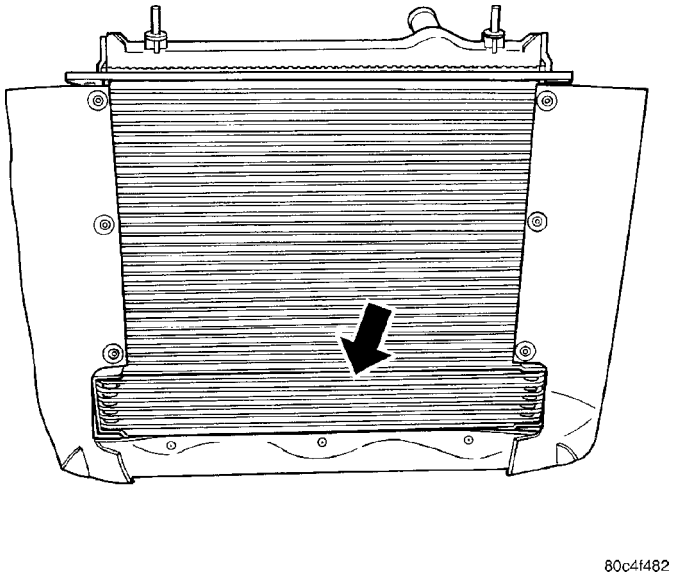

Fig. 1 Automatic Transmission Oil Cooler

REMOVAL

Non - Turbo

(1) Remove front fascia (Refer to 13 - FRAME & BUMPERS/BUMPERS/FRONT FASCIA - REMOVAL).

NOTE: When the transaxle cooler lines are removed from the rolled-groove type fittings at the cooler and transaxle, damage to the inner wall of hose will occur. To prevent potential leakage, the cooler hoses and clamps must be replaced.

(2) Loosen hose clamps. Disconnect hoses from transmission oil cooler (Fig. 3).

(3) Remove screws attaching transmission oil cooler to radiator (Fig. 3).

(4) Remove transmission oil cooler (Fig. 3).

AUTOMATIC TRANSMISSION OIL COOLER (Continued)

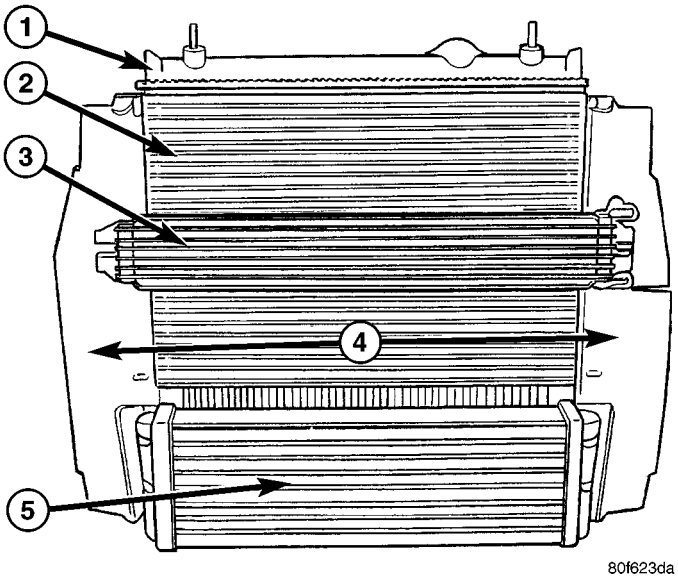

Fig. 2 Cooling Module - 2.4L Turbo

1 - RADIATOR
2 - A/C CONDENSER
3 - AUTOMATIC TRANSMISSION OIL COOLER
4 - AIR SEALS
5 - CHARGE AIR COOLER

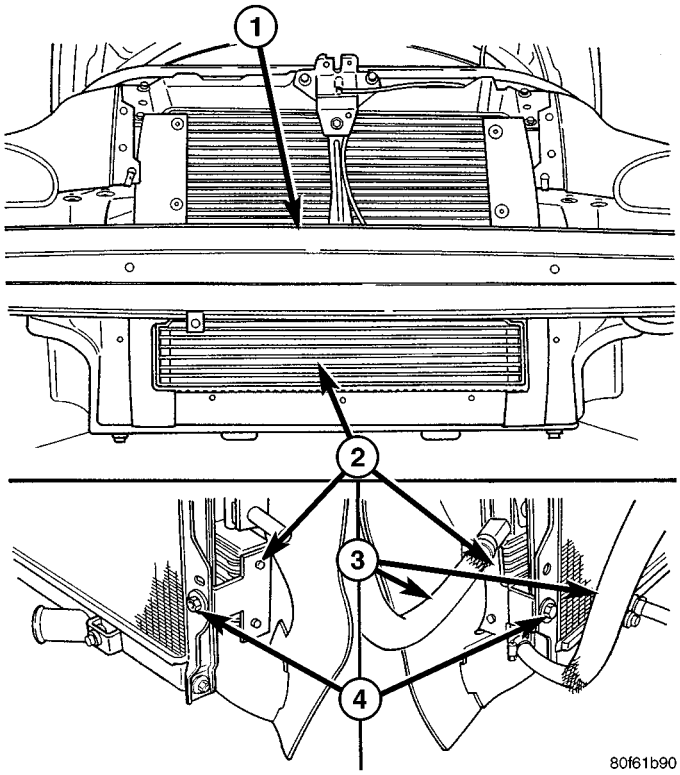

Fig. 3 Automatic Transmission Oil Cooler - Removal/Installation

1 - FRONT BUMPER (FASCIA REMOVED)
2 - TRANSMISSION OIL COOLER
3 - HOSES
4 - SCREWS

Turbo

NOTE: When the transaxle cooler lines are removed from the rolled-groove type fittings at the cooler and transaxle, damage to the inner wall of hose will occur. To prevent potential leakage, the cooler hoses and clamps must be replaced.

(1) Remove grille (Refer to 23 - BODY/EXTERIOR/GRILLE - REMOVAL).

(2) Remove upper radiator closure panel (Refer to 23 - BODY/EXTERIOR/RADIATOR CLOSURE PANEL - REMOVAL) (Fig. 4).

(3) Remove radiator closure panel center brace (Fig. 4).

(4) Remove fasteners attaching transmission oil cooler to air conditioning condenser (Fig. 5).

(5) Loosen hose clamps. Disconnect hoses from transmission oil cooler.

(6) Remove transmission oil cooler.

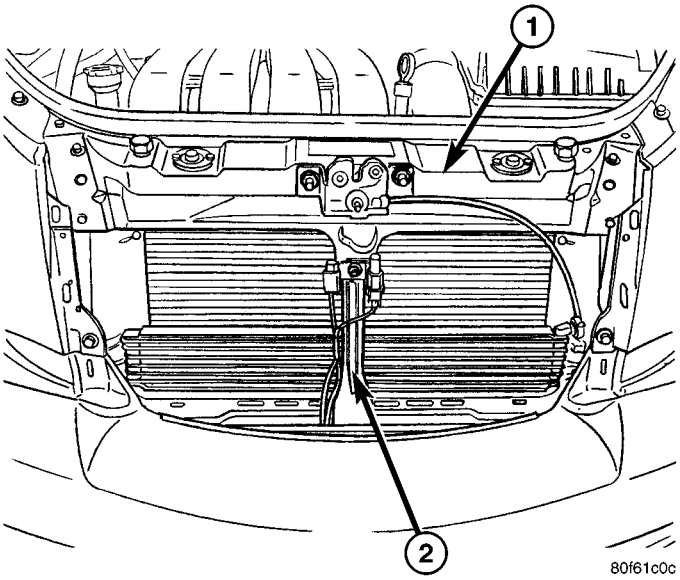

Fig. 4 Upper Radiator Closure Panel and Center Brace

1 - UPPER RADIATOR CLOSURE PANEL
2 - CENTER BRACE

CLEANING

Check the external cooler for debris on the cooling fin surfaces. Clean as necessary.

AUTOMATIC TRANSMISSION OIL COOLER (Continued)

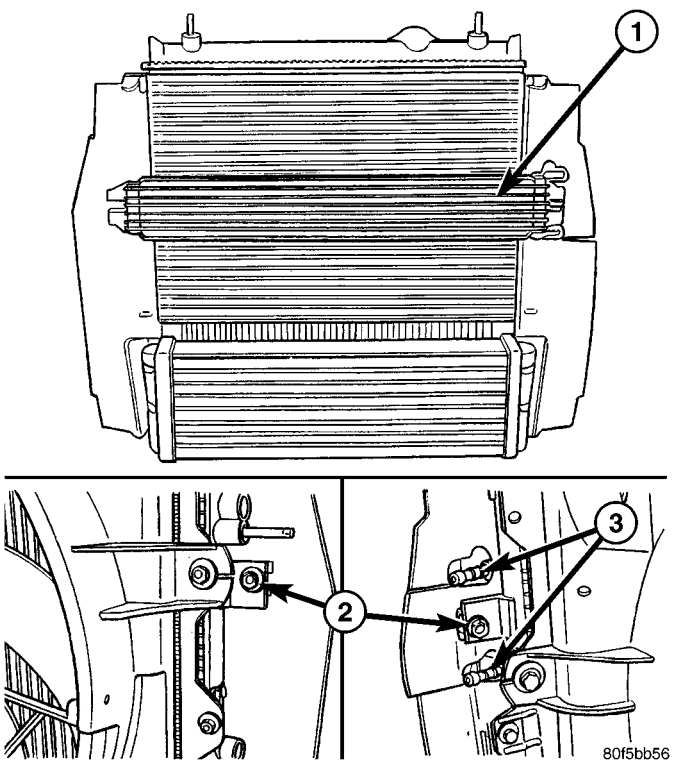

Fig. 5 Automatic Transmission Oil Cooler - Removal/Installation 2.4L Turbo

1 - TRANSMISSION OIL COOLER
2 - ATTACHING SCREWS
3 - HOSE FITTINGS

INSPECTION

Inspect all hoses, tubes, clamps and connections for leaks, cracks, or damage. Replace as necessary. Use only approved transmission oil cooler hoses that are molded to fit the space available.

Inspect external coolers for leaks, loose mounts, or damage. Replace as necessary.

INSTALLATION

Non - Turbo

(1) Install transmission oil cooler and tighten screws to 8 N·m (70 in. lbs.) (Fig. 3).

NOTE: When the transaxle cooler lines are removed from the rolled-groove type fittings at the cooler and transaxle, damage to the inner wall of hose will occur. To prevent potential leakage, the cooler hoses and clamps must be replaced.

(2) Replace automatic transmission cooler hoses and clamps.

(3) Connect hoses to cooler (Fig. 3). Tighten hose clamps to 2 N·m (18 in. lbs.).

(4) Install front fascia (Refer to 13 - FRAME & BUMPERS/BUMPERS/FRONT FASCIA - INSTALLATION).

(5) Start engine and check transmission fluid level. Adjust level as necessary.

Turbo

NOTE: When the transaxle cooler lines are removed from the rolled-groove type fittings at the cooler and transaxle, damage to the inner wall of hose will occur. To prevent potential leakage, the cooler hoses and clamps must be replaced.

(1) Replace automatic transmission cooler hoses and clamps.

(2) Connect hoses to cooler. Tighten hose clamps to 2 N·m (18 in. lbs.).

(3) Install transmission oil cooler and tighten screws to 8 N·m (70 in. lbs.) (Fig. 5).

(4) Install radiator closure panel center brace (Fig. 4).

(5) Install upper radiator closure panel (Refer to 23 - BODY/EXTERIOR/RADIATOR CROSSMEMBER - INSTALLATION) (Fig. 4).

(6) Install grille (Refer to 23 - BODY/EXTERIOR/GRILLE - INSTALLATION).

(7) Start engine and check transmission fluid level. Adjust level as necessary.

AUDIO

TABLE OF CONTENTS

page

AUDIO
DESCRIPTION 1
OPERATION 1
DIAGNOSIS AND TESTING - AUDIO 2
ANTENNA BODY & CABLE
DESCRIPTION 3
OPERATION 3
DIAGNOSIS AND TESTING - ANTENNA BODY AND CABLE 4
REMOVAL 5
INSTALLATION 5
ANTENNA - SATELLITE RADIO
DESCRIPTION 6
OPERATION 6
REMOVAL 6
INSTALLATION 6
ANTENNA CABLE - SATELLITE RADIO
DESCRIPTION 7
REMOVAL 7
INSTALLATION 7
RADIO
DESCRIPTION 7
OPERATION 7
REMOVAL 8
INSTALLATION 8
RADIO NOISE SUPPRESSION COMPONENTS
DESCRIPTION 8
OPERATION 8
REMOVAL 9
INSTALLATION 11
SATELLITE RECEIVER MODULE
DESCRIPTION 11
OPERATION 11
REMOVAL 11
INSTALLATION 11
SPEAKER
REMOVAL 11
INSTALLATION 12

AUDIO

DESCRIPTION

An audio system is standard factory-installed equipment on this model unless the radio delete option is specified. Several combinations of radio receivers are offered on this model. The audio system uses an ignition switched source of battery current so that the system will only operate when the ignition switch is in the RUN or ACCESSORY positions.

The audio system includes the following components:

- Antenna
- Antenna - satellite radio (if equipped)
- Radio noise suppression components
- Radio receiver
- Satellite receiver module (if equipped)
- Speakers

Certain functions and features of the audio system rely upon resources shared with other electronic modules in the vehicle over the Programmable Communication Interface (PCI) bus network. The data bus network allows the sharing of sensor information. For diagnosis of these electronic modules or of the data bus network, the use of a DRB III® scan tool and the proper Diagnostic Procedures manual are recommended.

Refer to the appropriate wiring information in this service manual for complete standard and premium audio system circuit diagrams. The wiring information includes proper wire and connector repair procedures, further details on wire harness routing and retention, as well as pin-out and location views for the various wire harness connectors, splices, and grounds.

OPERATION

The standard audio system components are designed to provide audio entertainment and information through the reception, tuning and amplification of locally broadcast radio signals in both the Amplitude Modulating (AM) and Frequency Modulating (FM) commercial frequency ranges.

The available satellite radio system is a subscription based service. Information sent by satellite is transmitted to the roof mounted antenna, then to the satellite receiver module. The operator then has the choice of multiple music/information channels.

The audio system components operate on battery current received through a fuse in the Junction Block (JB) on a fused ignition switch output (run-acc) circuit so that the system will only operate when the ignition switch is in the On or Accessory positions.

See the owner's manual for more information on the features, use and operation of each of the available audio systems.

AUDIO (Continued)

DIAGNOSIS AND TESTING - AUDIO

Any diagnosis of the Audio system should begin with the use of the DRB III ® diagnostic tool. For information on the use of the DRB III®, refer to the appropriate Diagnostic Service Manual.

Refer to the appropriate wiring information. The wiring information includes wiring diagrams, proper wire and connector repair procedures, details of wire harness routing and retention, connector pin-out information and location views for the various wire harness connectors, splices and grounds.

WARNING: DISABLE THE AIRBAG SYSTEM BEFORE ATTEMPTING ANY STEERING WHEEL, STEERING COLUMN, SEAT BELT TENSIONER, SIDE AIRBAG, OR INSTRUMENT PANEL COMPONENT DIAGNOSIS OR SERVICE. DISCONNECT AND ISOLATE THE BATTERY NEGATIVE (GROUND) CABLE, THEN WAIT TWO MINUTES FOR THE AIRBAG SYSTEM CAPACITOR TO DISCHARGE BEFORE PERFORMING FURTHER DIAGNOSIS OR SERVICE. THIS IS THE ONLY SURE WAY TO DISABLE THE AIRBAG SYSTEM. FAILURE TO TAKE THE PROPER PRECAUTIONS COULD RESULT IN ACCIDENTAL AIRBAG DEPLOYMENT AND POSSIBLE PERSONAL INJURY.

AUDIO SYSTEM DIAGNOSIS

CONDITION	POSSIBLE CAUSES	CORRECTION
NO AUDIO	1. Fuse faulty.	1. Check radio fuse and Ignition-Off Draw (IOD) fuse in Junction Block (JB). Replace fuses, if required.
	2. Radio connector faulty.	2. Check for loose or corroded radio connector. Repair, if required.
	3. Wiring faulty.	3. Check for shorted or open wires. Repair wiring, if required.
	4. Radio ground faulty.	4. Check for continuity between radio chassis and a known good ground. There should be continuity. Repair ground, if required.
	5. Radio faulty.	5. Refer to appropriate Diagnostic Service Manual.
	6. Speakers faulty.	6. Replace speaker as necessary.
NO SATELLITE RADIO AUDIO (PERFORM ALL DIAGNOSIS OUTDOORS)	1. Subscription service has expired (with subscription expired, one channel is still available)	1. Contact satellite radio provider.
	2. Items on roof blocking satellite antenna.	2. Remove or reposition items to allow clear space around antenna.
	3. Frayed, broken or faulty antenna cable.	3. Replace satellite antenna cable.
NO RADIO DISPLAY	1. Fuse faulty.	1. Check radio fuse and Ignition-Off Draw (IOD) fuse in Junction Block (JB). Replace fuses, if required.
	2. Radio connector faulty.	2. Check for loose or corroded radio connector. Repair, if required.
	3. Wiring faulty.	3. Check for battery voltage at radio connector. Repair wiring, if required.
	4. Radio ground faulty.	4. Check for continuity between radio chassis and a known good ground. There should be continuity. Repair ground, if required.
	5. Radio faulty.	5. Refer to appropriate Diagnostic Service Manual.

AUDIO (Continued)

CONDITION	POSSIBLE CAUSES	CORRECTION
CLOCK WILL NOT KEEP SET TIME	1. Fuse faulty.	1. Check Ignition-Off Draw (IOD) fuse in the Junction Block (JB). Replace fuse, if required.
	2. Radio connector faulty.	2. Check for loose or corroded radio connector. Repair, if required.
	3. Wiring faulty.	3. Check for battery voltage at radio connector. Repair wiring, if required.
	4. Radio ground faulty.	4. Check for continuity between radio chassis and a known good ground. There should be continuity. Repair ground, if required.
	5. Radio faulty.	5. Refer to appropriate Diagnostic Service Manual.
POOR RADIO RECEPTION	1. Antenna faulty.	1. (Refer to 8 - ELECTRICAL/AUDIO/ANTENNA BODY & CABLE - DIAGNOSIS AND TESTING).
	2. Radio ground faulty.	2. Check for continuity between radio chassis and a known good ground. There should be continuity. Repair ground, if required.
	3. Radio noise suppression faulty.	3. Repair or replace ground strap as necessary.
	4. Radio faulty.	4. Refer to appropriate Diagnostic Service Manual.
NO/POOR TAPE OPERATION	1. Faulty tape.	1. Insert known good tape and test operation.
	2. Foreign objects behind tape door.	2. Remove foreign objects and test operation.
	3. Dirty cassette tape head.	3. Clean head with Mopar Cassette Head Cleaner.
	4. Faulty tape deck.	4. Exchange or replace radio, if required.
NO COMPACT DISC OPERATION	1. Faulty CD.	1. Insert known good CD and test operation.
	2. Foreign material on CD.	2. Clean CD and test operation.
	3. Condensation on CD or optics.	3. Allow temperature of vehicle interior to stabilize and test operation.
	4. Faulty CD player.	4. Refer to appropriate Diagnostic Service Manual.

ANTENNA BODY & CABLE

DESCRIPTION

The antenna body and cable are secured below the fender panel by the antenna cap nut through a mounting hole in the side of the right front fender. The primary coaxial antenna cable is then routed beneath the fender sheet metal and through a entry hole in the right cowl side panel into the interior of the vehicle. Inside the vehicle, the primary coaxial cable is connected to a secondary instrument panel antenna coaxial cable with an in-line connector that is located behind the right end of the instrument panel. The secondary coaxial cable is then routed behind the instrument panel to the back of the radio.

OPERATION

The antenna body and cable connects the antenna mast to the radio. The radio antenna is an electromagnetic circuit component used to capture radio frequency signals that are broadcast by local commercial radio stations in both the Amplitude Modulating (AM) and Frequency Modulating (FM) frequency ranges. These electromagnetic radio frequency signals induce small electrical modulations into the antenna as they move past the mast. The antenna body transfers the weak electromagnetic radio waves induced into the rigid antenna mast into the center conductor of the flexible primary antenna coaxial cable. The braided outer shield of the antenna coaxial cable is grounded through both the antenna body and the radio chassis, effectively

ANTENNA BODY & CABLE (Continued)

shielding the radio waves as they are conducted to the radio. The radio then tunes and amplifies the weak radio signals into stronger electrical signals in order to operate the audio system speakers.

DIAGNOSIS AND TESTING - ANTENNA BODY AND CABLE

The following four tests are used to diagnose the antenna with an ohmmeter:

- **Test 1** - Mast to ground test
- **Test 2** - Tip-of-mast to tip-of-conductor test
- **Test 3** - Body ground to battery ground test
- **Test 4** - Body ground to antenna coaxial cable shield test.

WARNING: DISABLE THE AIRBAG SYSTEM BEFORE ATTEMPTING ANY STEERING WHEEL, STEERING COLUMN, SEAT BELT TENSIONER, SIDE AIRBAG, OR INSTRUMENT PANEL COMPONENT DIAGNOSIS OR SERVICE. DISCONNECT AND ISOLATE THE BATTERY NEGATIVE (GROUND) CABLE, THEN WAIT TWO MINUTES FOR THE AIRBAG SYSTEM CAPACITOR TO DISCHARGE BEFORE PERFORMING FURTHER DIAGNOSIS OR SERVICE. THIS IS THE ONLY SURE WAY TO DISABLE THE AIRBAG SYSTEM. FAILURE TO TAKE THE PROPER PRECAUTIONS COULD RESULT IN ACCIDENTAL AIRBAG DEPLOYMENT AND POSSIBLE PERSONAL INJURY.

The ohmmeter test lead connections for each test are shown in the illustration (Fig. 1).

NOTE: This model has a two-piece antenna coaxial cable. Tests 2 and 4 must be conducted in two steps to isolate an antenna cable problem. First, test the primary antenna cable (integral to the antenna body and cable) from the coaxial cable connector under the right end of the instrument panel near the right cowl side inner panel to the antenna body. Then, test the secondary antenna cable (instrument panel antenna cable) from the coaxial cable connector under the right end of the instrument panel near the right cowl side inner panel to the coaxial cable connector at the radio.

TEST 1

Test 1 determines if the antenna mast is insulated from ground. Proceed as follows:

(1) Disconnect and isolate the antenna coaxial cable connector under the right end of the instrument panel near the right cowl side inner panel.

(2) Touch one ohmmeter test lead to the tip of the antenna mast (below tip if ball tip is plastic). Touch the other test lead to the antenna cap nut. Check the ohmmeter reading for continuity.

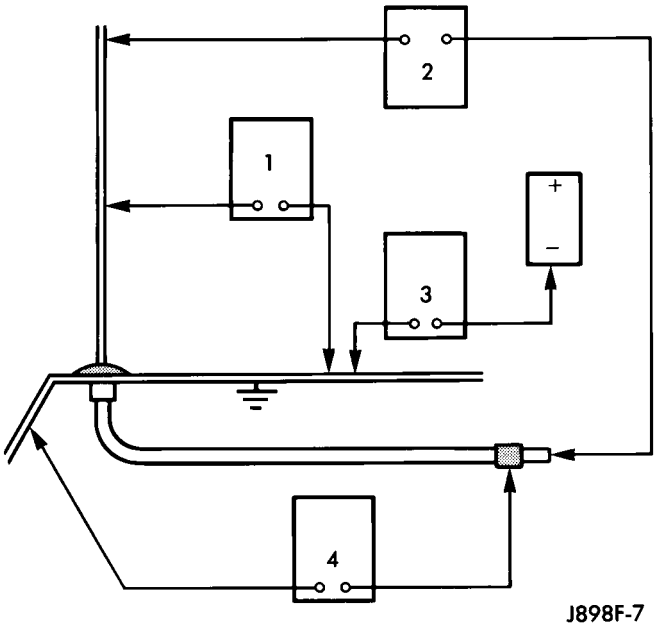

Fig. 1 Antenna Tests - Typical

(3) There should be no continuity. If OK, go to Test 2. If not OK, replace the faulty antenna body and cable.

TEST 2

Test 2 checks the antenna conductor components for an open circuit. This test should be performed first on the entire antenna circuit, from the antenna mast to the center conductor of the coaxial cable connector at the radio. If an open circuit is detected, each of the three antenna conductor components (antenna mast, antenna body and primary cable unit, instrument panel antenna secondary cable) should be isolated and tested individually to locate the exact component that is the source of the open circuit. To begin this test, proceed as follows:

(1) Disconnect the instrument panel (secondary) antenna cable coaxial connector from the back of the radio.

(2) Touch one ohmmeter test lead to the tip of the antenna mast. Touch the other test lead to the center conductor pin of the instrument panel antenna cable coaxial connector for the radio. Check the ohmmeter reading for continuity.

(3) There should be continuity. The ohmmeter should register only a fraction of an ohm resistance. High or infinite resistance indicates a damaged or open antenna conductor. If OK, go to Test 3. If not OK, isolate and test each of the individual antenna conductor components. Replace only the faulty antenna conductor component.

ANTENNA BODY & CABLE (Continued)

TEST 3

Test 3 checks the condition of the vehicle body ground connection. To begin this test, proceed as follows:

(1) This test must be performed with the battery positive cable disconnected from the battery. Disconnect and isolate both battery cables, negative cable first.

(2) Reconnect the battery negative cable.

(3) Touch one ohmmeter test lead to a good clean ground point on the vehicle fender. Touch the other test lead to the battery negative terminal post. Check the ohmmeter reading for continuity.

(4) There should be continuity. The ohmmeter should register less than one ohm resistance. High or infinite resistance indicates a loose, corroded, or damaged connection between the battery negative terminal and the vehicle body. If OK, go to Test 4. If not OK, check the battery negative cable connection to the vehicle body and the radio noise suppression ground strap connections to the engine and the vehicle body for being loose or corroded. Clean or tighten these connections as required.

TEST 4

Test 4 checks the condition of the connection between the antenna coaxial cable shield and the vehicle body ground as follows:

(1) Disconnect and isolate the antenna coaxial cable connector under the right end of the instrument panel near the right cowl side inner panel.

(2) Touch one ohmmeter test lead to a good clean ground point on the vehicle fender. Touch the other test lead to the outer crimp on the antenna coaxial cable connector under the right end of the instrument panel near the right cowl side inner panel. Check the ohmmeter reading for continuity.

(3) There should be continuity. The ohmmeter should register less than one ohm resistance. High or infinite resistance indicates a loose, corroded, or damaged connection between the antenna body and the vehicle body or between the antenna body and the antenna coaxial cable shield. If not OK, clean the antenna body to fender mating surfaces and tighten the antenna cap nut to specifications.

(4) Check the resistance again with an ohmmeter. If the resistance is still more then one ohm, replace the faulty antenna body and cable.

REMOVAL

(1) Disconnect and isolate the battery negative cable.

(2) Remove antenna mast by unscrewing mast from antenna body. On vehicles equipped with manual retractable antenna, lower antenna fully.

(3) Remove shroud (if equipped).

(4) Remove antenna nut and adapter (Fig. 2).

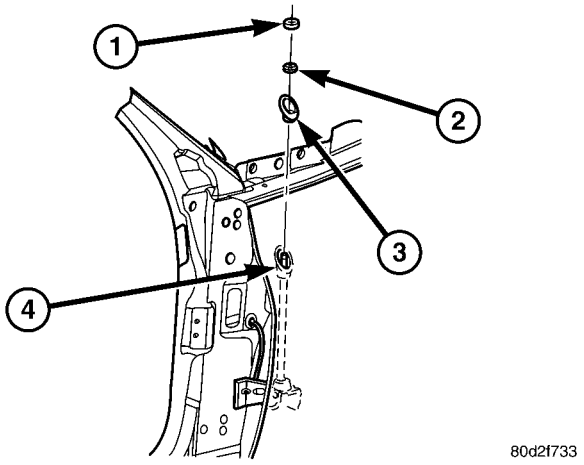

Fig. 2 ANTENNA BODY AND CABLE

1 - ANTENNA NUT SHROUD (IF EQUIPPED)
2 - ANTENNA NUT
3 - ANTENNA ADAPTER
4 - ANTENNA BODY AND CABLE

(5) Disconnect antenna body cable from instrument panel antenna cable.

(6) Remove inner fender shield as necessary to gain access to mounting fasteners.

(7) Remove antenna body and cable assembly from fender (Fig. 3).

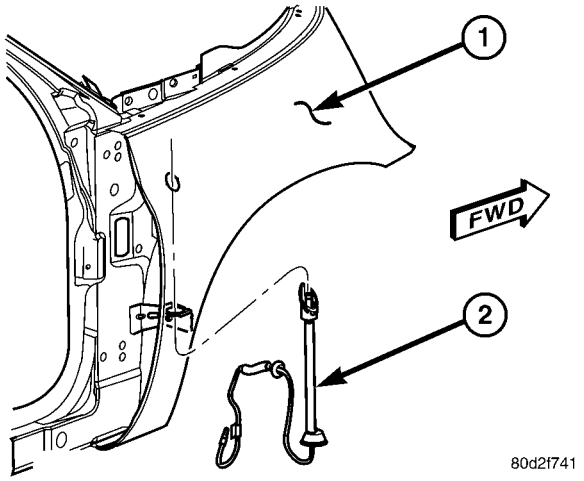

Fig. 3 ANTENNA MOUNTING

1 - FENDER
2 - ANTENNA BODY AND CABLE

INSTALLATION

(1) Position antenna body and cable assembly into fender.

(2) Insert antenna cable through the opening in fender.

ANTENNA BODY & CABLE (Continued)

(3) Seat the grommet in the side panel and connect the cable to the instrument panel harness connector.
(4) Install antenna nut and adapter.
(5) Install shroud (if equipped).
(6) Install the inner fender shield.
(7) Install antenna mast.
(8) Connect the antenna cable to the instrument panel antenna cable.
(9) Install the right side cowl trim panel.
(10) Connect the battery negative cable.

ANTENNA - SATELLITE RADIO

DESCRIPTION

The satellite radio antenna is secured by adhesive foam and two retainers which protrude through a hole in the roof panel. Two wires from the antenna are connected to the body harness above the headliner.

OPERATION

The satellite radio antenna receives signals from orbiting satellites and sends these signals to the satellite receiver module. The satellite radio antenna must have open space in which to operate. Items carried on the roof, parking inside etc. can have an effect on the antenna's ability to receive signals.

REMOVAL

(1) Disconnect and isolate the battery negative cable.
(2) Lower the rear portion of the headliner as necessary to access underside of antenna (Refer to 23 - BODY/INTERIOR/HEADLINER - REMOVAL).
(3) A adhesive removal tool can be created by using a 18 to 24 inch piece of nylon cord wrapped around two handles (Fig. 4). Using the removal tool, guide the nylon cord under the dust seal on the forward side of the antenna. Grab the handles and work the cord through the adhesive. Continue this for 360° around the antenna.
(4) Disconnect the wire harness connectors from the antenna.

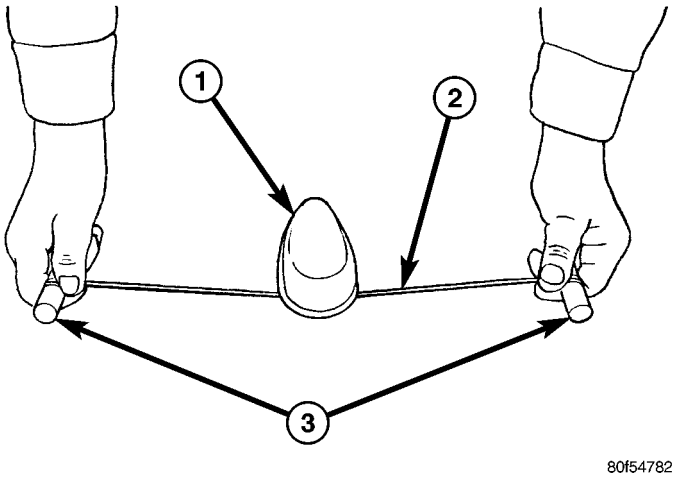

Fig. 4 SATELLITE RADIO ANTENNA REMOVAL

1 - SATELLITE ANTENNA
2 - NYLON CORD
3 - WOODEN DOWEL ROD

(5) From inside the vehicle, and using a flat bladed tool, depress one of the retaining tabs on the antenna. Push up the one side of the antenna connector through the roof panel. Depress the other side of the connector and remove the antenna.
(6) Remove any remaining adhesive from roof panel with isopropyl alcohol and a lint free cloth. If original antenna is being reinstalled, remove adhesive from antenna mounting surface.

INSTALLATION

(1) If original antenna is being reinstalled, remove backing from patch adhesive and apply to antenna base.
(2) Remove backing from the adhesive on the antenna.
(3) Insert wire harness through hole in roof panel. Press antenna into position until both retainers snap into place.
(4) Connect wire harness connectors to antenna.
(5) Install headliner (Refer to 23 - BODY/INTERIOR/HEADLINER - INSTALLATION).
(6) Connect battery negative cable.

ANTENNA CABLE - SATELLITE RADIO

DESCRIPTION

The satellite radio antenna connects the roof mounted antenna to the satellite receiver module. It has two connectors at each end and is routed above the headliner, then behind the left quarter panel trim.

REMOVAL

(1) Disconnect and isolate the battery negative cable.

(2) Remove the D-pillar trim panel (Refer to 23 - BODY/INTERIOR/D-PILLAR TRIM - REMOVAL).

(3) Remove the left rear quarter trim panel (Refer to 23 - BODY/INTERIOR/LEFT QUARTER TRIM PANEL - REMOVAL).

(4) Lower the rear portion of the headliner as necessary to access the underside of the satellite antenna (Refer to 23 - BODY/INTERIOR/HEADLINER - REMOVAL).

(5) Detach the antenna cable from the body harness (Fig. 5). Disconnect wire harness connectors at each end of the cable.

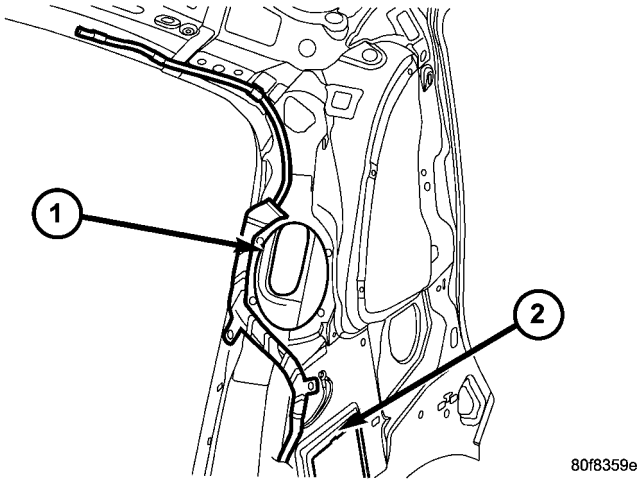

Fig. 5 ANTENNA CABLE - SATELLITE RADIO

1 - ANTENNA CABLE - SATELLITE RADIO
2 - SATELLITE RECEIVER MODULE

INSTALLATION

(1) Secure the antenna cable to the body harness. Connect the wire harness connectors at each end of the antenna.

(2) Install the headliner (Refer to 23 - BODY/INTERIOR/HEADLINER - INSTALLATION).

(3) Install the left rear quarter trim panel (Refer to 23 - BODY/INTERIOR/LEFT QUARTER TRIM PANEL - INSTALLATION).

(4) Install the D-pillar trim panel(Refer to 23 - BODY/INTERIOR/D-PILLAR TRIM - INSTALLATION)

(5) Connect the battery negative cable.

RADIO

DESCRIPTION

Available factory-installed radio receivers for this model include:

- AM/FM/cassette with CD changer control feature (RBY, RBT or RAD sales code)
- AM/FM/cassette/CD/ (RAZ sales code)
- AM/FM/CD with CD changer control (RBK sales code)
- AM/FM/CD with 6 CD changer (RBQ sales code)

All factory-installed radio receivers can communicate on the Programmable Communications Interface (PCI) data bus network. All factory-installed receivers are stereo Electronically Tuned Radios (ETR) and include an electronic digital clock function.

These radio receivers can only be serviced by an authorized radio repair station. See the latest Warranty Policies and Procedures manual for a current listing of authorized radio repair stations.

OPERATION

The radio receiver operates on ignition switched battery current that is available only when the ignition switch is in the On or Accessory positions. The electronic digital clock function of the radio operates on fused battery current supplied through the IOD fuse, regardless of the ignition switch position.

For more information on the features, setting procedures, and control functions for each of the available factory-installed radio receivers, refer to the owner's manual.

RADIO (Continued)

REMOVAL

(1) Disconnect and isolate the battery negative cable.
(2) Remove instrument panel center bezel.
(3) Remove mounting fasteners and remove radio from instrument panel (Fig. 6).

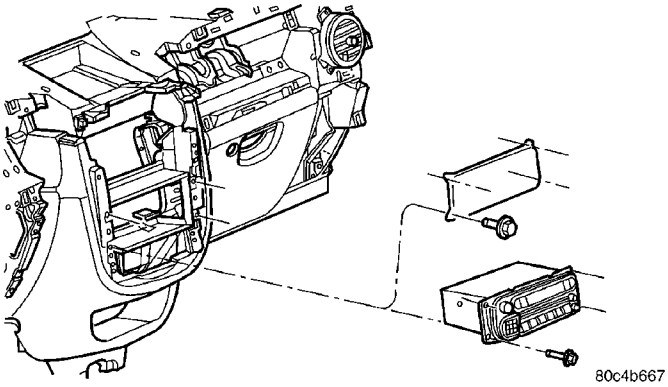

Fig. 6 Radio Remove/Install

(4) Disconnect wire harness connector from radio.

CAUTION: Pulling the antenna cable straight out of the radio without pulling on the locking antenna connector could damage the cable or radio.

(5) Disconnect the antenna cable by pulling the locking antenna connector away from the radio (Fig. 7).

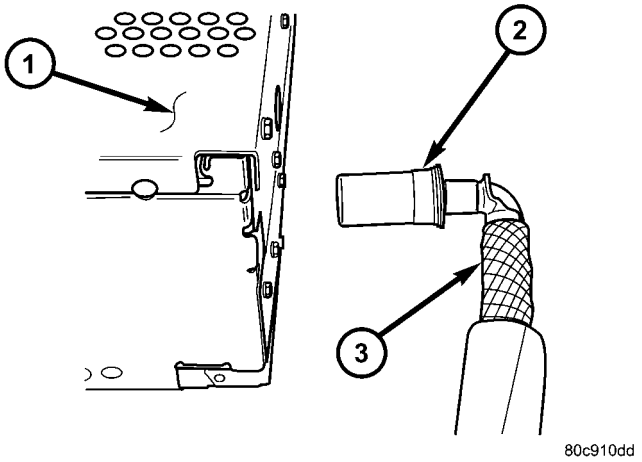

Fig. 7 ANTENNA TO RADIO

1 - RADIO
2 - LOCKING ANTENNA CONNECTOR
3 - INSTRUMENT PANEL ANTENNA CABLE

INSTALLATION

(1) Connect the wire harness connector and antenna cable to radio.
(2) Insert radio into instrument panel.
(3) Install mounting fasteners. Tighten to 2 N·m (20 in. lbs.).
(4) Install instrument panel center bezel.
(5) Connect battery negative cable.

RADIO NOISE SUPPRESSION COMPONENTS

DESCRIPTION

Radio noise suppression devices are factory-installed standard equipment on this vehicle. Radio Frequency Interference (RFI) and ElectroMagnetic Interference (EMI) can be produced by any on-board or external source of electromagnetic energy. These electromagnetic energy sources can radiate electromagnetic signals through the air, or conduct them through the vehicle electrical system.

When the audio system converts RFI or EMI to an audible acoustic wave form, it is referred to as radio noise. This undesirable radio noise is generally manifested in the form of “buzzing,” “hissing,” “popping,” “clicking,” “crackling,” and/or “whirring” sounds. In most cases, RFI and EMI radio noise can be suppressed using a combination of vehicle and component grounding, filtering and shielding techniques. This vehicle is equipped with factory-installed radio noise suppression devices that were designed to minimize exposure to typical sources of RFI and EMI; thereby, minimizing radio noise complaints.

Factory-installed radio noise suppression is accomplished primarily through circuitry or devices that are integral to the factory-installed radios, audio power amplifiers and other on-board electrical components such as generators, wiper motors, blower motors, and fuel pumps that have been found to be potential sources of RFI or EMI. External radio noise suppression devices that are used on this vehicle to control RFI or EMI, and can be serviced, include the following:

- **Ground straps** - This length of braided ground strap has an eyelet terminal connector crimped to each end. They are located in various locations on the vehicle.
- **Radio Noise Suppression Capacitor** - This component is attached near the exhaust manifold.
- **Resistor-type spark plugs** - This type of spark plug has an internal resistor connected in series between the spark plug terminal and the center electrode to help reduce the production of electromagnetic radiation that can result in radio noise.

OPERATION

There are two common strategies that can be used to suppress Radio Frequency Interference (RFI) and ElectroMagnetic Interference (EMI) radio noise. The first suppression strategy involves preventing the production of RFI and EMI electromagnetic signals at their sources. The second suppression strategy involves preventing the reception of RFI and EMI

RADIO NOISE SUPPRESSION COMPONENTS (Continued)

electromagnetic signals by the audio system components.

The use of braided ground straps in key locations is part of the RFI and EMI prevention strategy. These ground straps ensure adequate ground paths, particularly for high current components such as many of those found in the starting, charging, ignition, engine control and transmission control systems. An insufficient ground path for any of these high current components may result in radio noise caused by induced voltages created as the high current seeks alternative ground paths through components or circuits intended for use by, or in close proximity to the audio system components or circuits.

Preventing the reception of RFI and EMI is accomplished by ensuring that the audio system components are correctly installed in the vehicle. Loose, corroded or improperly soldered wire harness connections, improperly routed wiring and inadequate audio system component grounding can all contribute to the reception of RFI and EMI. A properly grounded antenna body and radio chassis, as well as a shielded antenna coaxial cable with clean and tight connections will each help reduce the potential for reception of RFI and EMI.

REMOVAL

ENGINE GROUND STRAP

(1) Disconnect and isolate the battery negative cable.

(2) Remove bolt from engine cylinder head (Fig. 8), (Fig. 9), (Fig. 10).

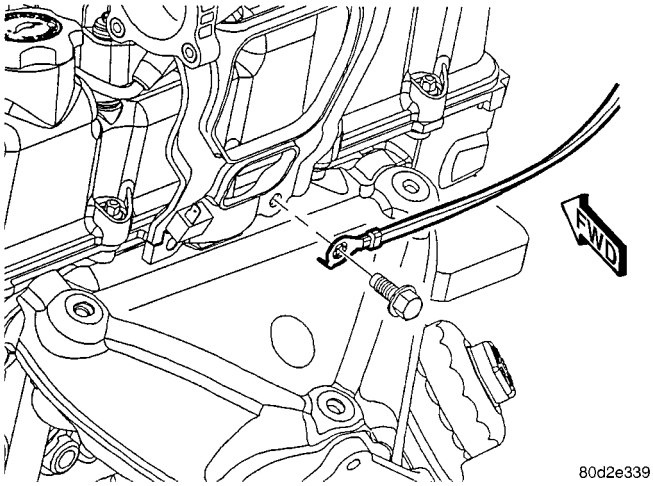

Fig. 8 GROUND STRAP TO ENGINE 1.6L

(3) Remove bolt from strut tower and remove strap (Fig. 11).

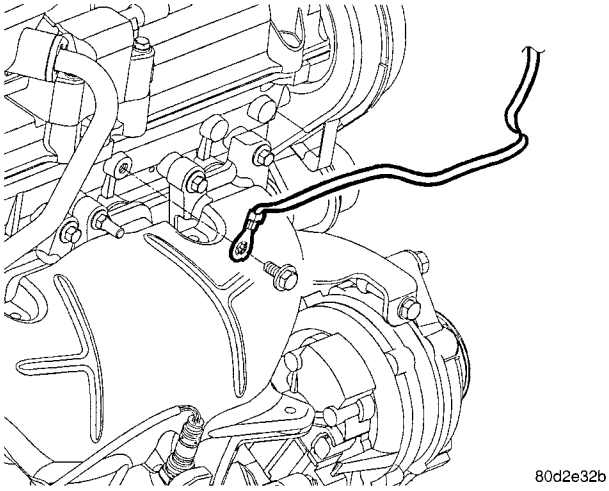

Fig. 9 GROUND STRAP TO ENGINE 2.0/2.4L

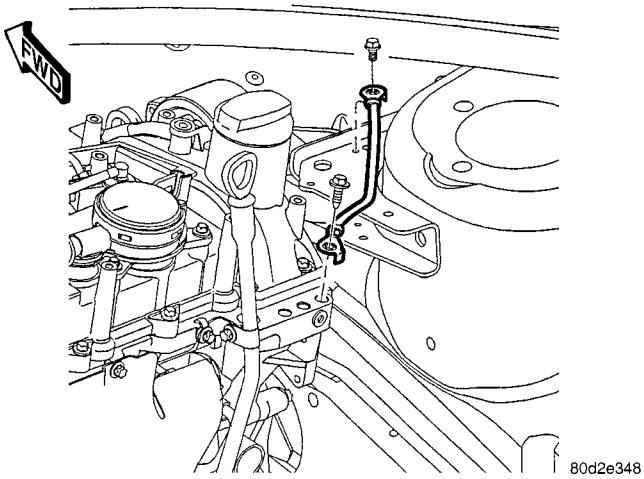

Fig. 10 GROUND STRAP TO ENGINE 2.2L

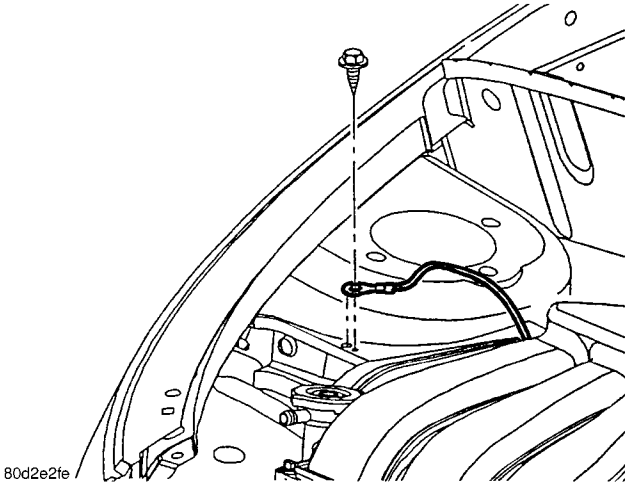

Fig. 11 GROUND STRAP TO STRUT TOWER

RADIO NOISE SUPPRESSION COMPONENTS (Continued)

HOOD HINGE GROUND STRAP

(1) Disconnect and isolate the battery negative cable.

(2) Remove bolt from fender (Fig. 12).

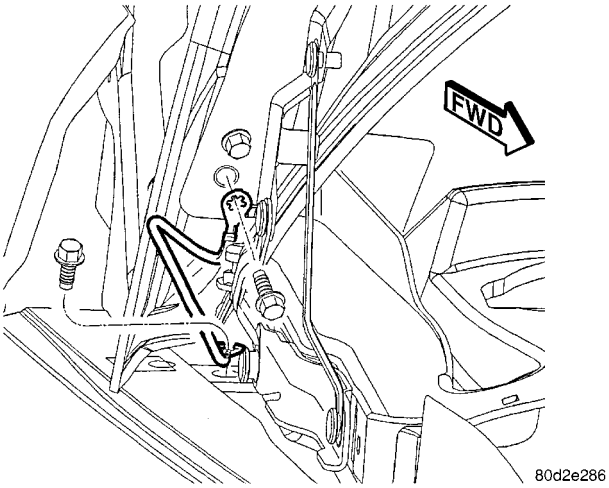

Fig. 12 HOOD HINGE GROUND STRAP

(3) Remove bolt from hood and remove strap.

MUFFLER GROUND STRAP

(1) Disconnect and isolate the battery negative cable.

(2) Remove bolt from rear floor pan (Fig. 13).

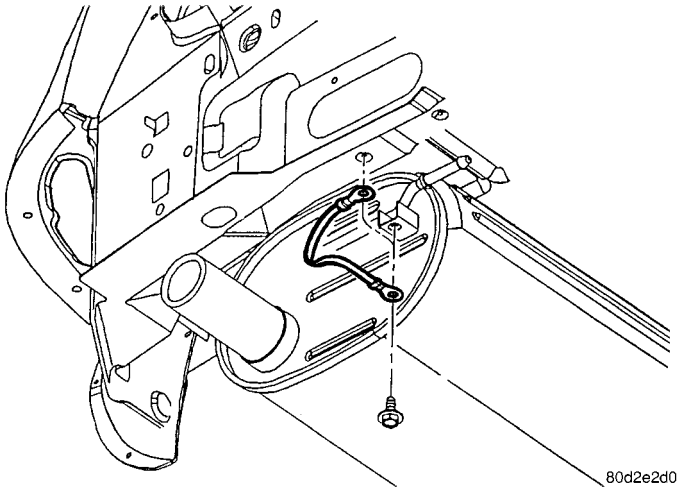

Fig. 13 MUFFLER GROUND STRAP

(3) Remove bolt from muffler and remove strap.

RADIO NOISE SUPPRESSION CAPACITOR

(1) Disconnect and isolate the battery negative cable.

(2) Disconnect electrical harness connector from capacitor (Fig. 14).

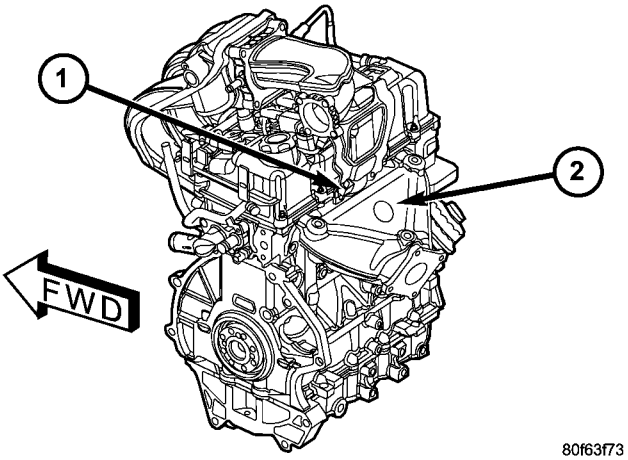

Fig. 14 RADIO NOISE CAPACITOR - TYPICAL

1 - RADIO NOISE CAPACITOR
2 - EXHAUST MANIFOLD

(3) Remove bolt from capacitor and remove capacitor.

STRUT BRACKET TO BODY GROUND STRAP

(1) Disconnect and isolate the battery negative cable.

(2) Remove bolt from strut (Fig. 15)

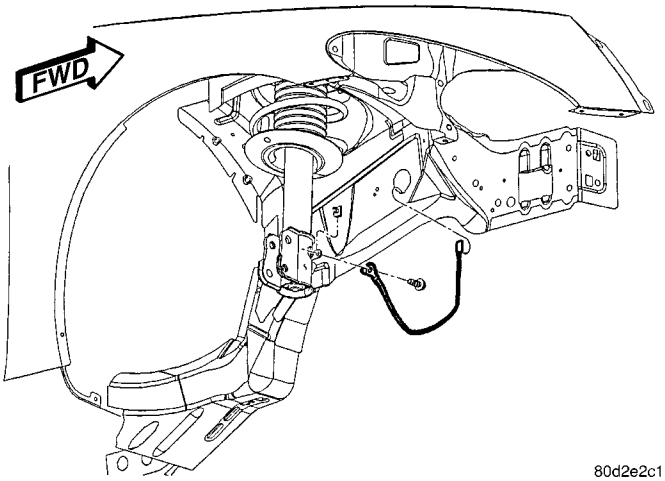

Fig. 15 STRUT BRACKET TO BODY GROUND STRAP

(3) Remove strap from frame rail.

RADIO NOISE SUPPRESSION COMPONENTS (Continued)

INSTALLATION

ENGINE GROUND STRAP

(1) Install strap and bolt to strut tower. Tighten bolt to 12 N·m (105 in. lbs.).

(2) Install strap and bolt to engine cylinder head. Tighten bolt to 28 N·m (21 ft. lbs.).

(3) Connect battery negative cable.

HOOD HINGE GROUND STRAP

(1) Install strap and bolt to fender. Tighten bolt to 4 N·m (35 in. lbs.).

(2) Install strap and bolt to hood. Tighten bolt to 4 N·m (35 in. lbs.).

(3) Connect battery negative cable.

MUFFLER GROUND STRAP

(1) Install strap and bolt to rear floor pan. Tighten bolt to 8 N·m (75 in. lbs.).

(2) Install strap and bolt to muffler. Tighten bolt to 8 N·m (75 in. lbs.).

(3) Connect battery negative cable.

RADIO NOISE SUPPRESSION CAPACITOR

(1) Install capacitor and bolt.

(2) Connect electrical harness connector to capacitor.

(3) Connect battery negative cable.

STRUT BRACKET TO BODY GROUND STRAP

(1) Install strap to frame rail.

CAUTION: Ensure that ground strap does not come in contact with brake hose. Damage to brake hose can result.

(2) Install strap and bolt to strut. Tighten bolt to 12 N·m (105 in. lbs.).

(3) Connect battery negative cable.

SATELLITE RECEIVER MODULE

DESCRIPTION

The satellite receiver module is located behind the left rear trim panel. It is mounted to a bracket which is fastened to the inner quarter panel sheet metal.

OPERATION

The satellite receiver module receives signals from the roof mounted antenna and processes this information before it is sent to the radio. The module operates on both battery and accessory feed circuits and will operate with the ignition key in the run or accessory position only.

REMOVAL

(1) Disconnect and isolate the battery negative cable.

(2) Remove the left rear quarter trim panel (Refer to 23 - BODY/INTERIOR/LEFT QUARTER TRIM PANEL - REMOVAL).

(3) Remove the mounting bracket fasteners (Fig. 16).

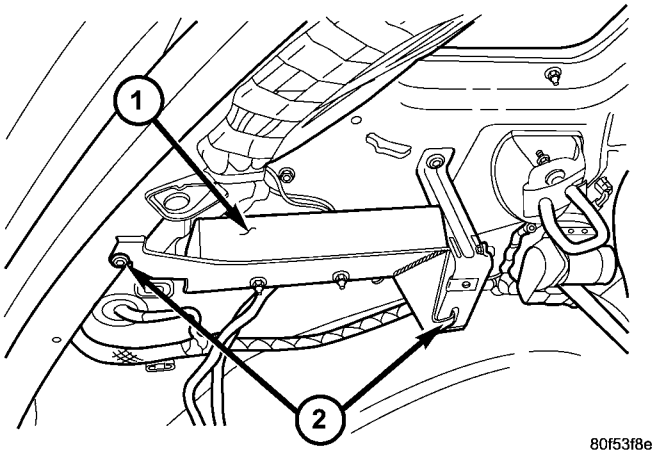

Fig. 16 SATELLITE RECEIVER MODULE

1 - SATELLITE RECEIVER MODULE
2 - MOUNTING BRACKET FASTENERS

(4) Disconnect the wire harness connectors.

(5) Remove the module from the mounting bracket.

INSTALLATION

(1) Position the module to the mounting bracket. Tighten mounting fasteners to 6 N·m (53 in. lbs.).

(2) Connect wire harness connectors.

(3) Install mounting bracket and fasteners. Tighten to 5 N·m (45 in. lbs.).

(4) Install the left rear quarter trim panel (Refer to 23 - BODY/INTERIOR/LEFT QUARTER TRIM PANEL - INSTALLATION).

(5) Connect the battery negative cable.

SPEAKER

REMOVAL

FRONT DOOR SPEAKER

(1) Disconnect and isolate the battery negative cable.

(2) Remove the front door trim panel (Refer to 23 - BODY/DOOR - FRONT/TRIM PANEL - REMOVAL).

(3) Remove the speaker retaining screws (Fig. 17).

(4) Remove speaker and disconnect wire harness connector from speaker.

SPEAKER (Continued)

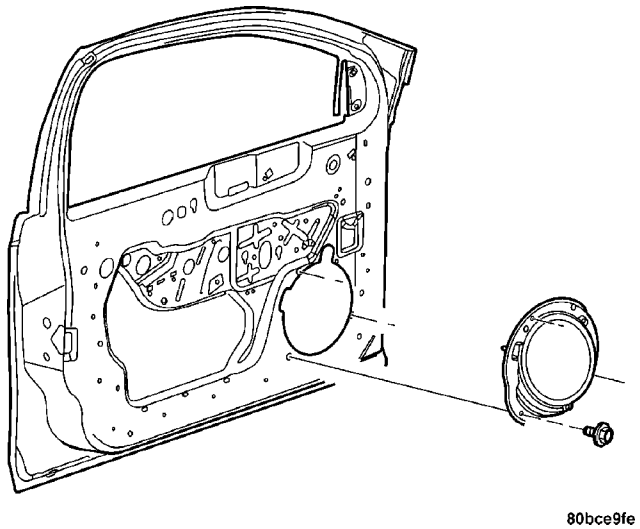

Fig. 17 Front Door Speaker Remove/Install

INSTRUMENT PANEL SPEAKER

(1) Disconnect and isolate the battery negative cable.

(2) Remove instrument panel top cover (Refer to 23 - BODY/INSTRUMENT PANEL/INSTRUMENT PANEL TOP COVER - REMOVAL).

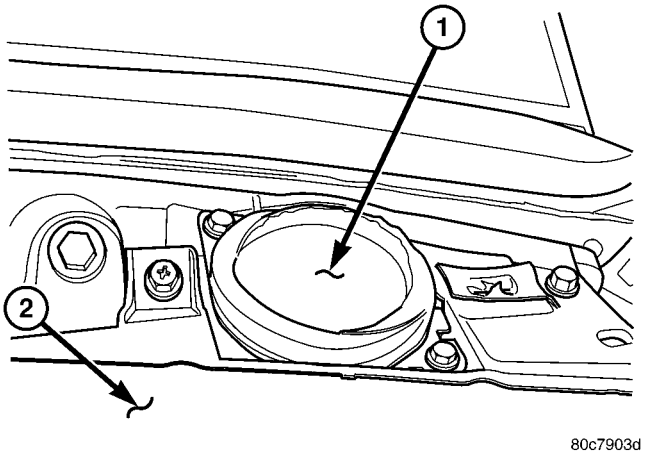

Fig. 18 INSTRUMENT PANEL SPEAKER

1 - INSTRUMENT PANEL SPEAKER
2 - INSTRUMENT PANEL

(3) Remove speaker retaining screws (Fig. 18).

(4) Remove speaker and disconnect wire harness connector.

REAR SPEAKER

(1) Disconnect and isolate the battery negative cable.

(2) Remove the D-pillar trim (Refer to 23 - BODY/INTERIOR/D-PILLAR TRIM - REMOVAL).

(3) Remove the speaker retaining screws (Fig. 19).

(4) Remove the speaker and disconnect the wire harness connector.

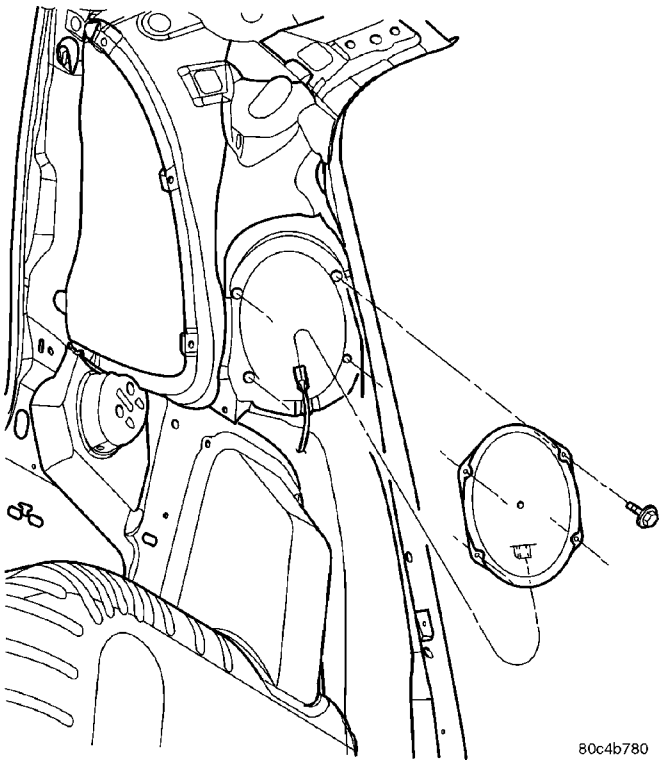

Fig. 19 Rear Speaker Remove/Install

INSTALLATION

FRONT DOOR SPEAKER

(1) Connect wire harness connector to speaker.

(2) Install speaker screws. Tighten to 2 N·m (20 in. lbs.).

(3) Install the front door trim panel (Refer to 23 - BODY/DOOR - FRONT/TRIM PANEL - INSTALLATION).

(4) Connect the battery negative cable.

INSTRUMENT PANEL SPEAKER

(1) Connect wire harness connector to speaker.

(2) Install speaker screws. Tighten to 2 N·m (20 in. lbs.).

(3) Install instrument panel top cover (Refer to 23 - BODY/INSTRUMENT PANEL/INSTRUMENT PANEL TOP COVER - INSTALLATION).

(4) Connect the battery negative cable.

REAR SPEAKER

(1) Connect wire harness connector to speaker.

(2) Install speaker screws. Tighten to 2 N·m (24 in. lbs.).

(3) Install the D-pillar trim (Refer to 23 - BODY/INTERIOR/D-PILLAR TRIM - INSTALLATION).

(4) Connect the battery negative cable.

CHIME/BUZZER

TABLE OF CONTENTS

page

CHIME/BUZZER
DESCRIPTION 1
OPERATION 1
DIAGNOSIS AND TESTING
DIAGNOSIS AND TESTING - BRAKE/PARK BRAKE INDICATOR 2
DIAGNOSIS AND TESTING - CHIME CONDITIONS 2
DIAGNOSIS AND TESTING - FASTEN SEAT BELTS 2
DIAGNOSIS AND TESTING - KEY IN IGNITION 2

CHIME/BUZZER

DESCRIPTION

The chime module is located within, and serviced with the instrument cluster. The chime system provides the driver with warning chimes for:

- Seat Belt
- Exterior Lamps ON
- Key-In Ignition
- Warning Lamp Announcement
- Turn Signal On
- Park Brake
- Low Fuel
- Door Ajar
- Reverse (Diesel and Turbo Only)

OPERATION

FASTEN SEAT BELT

The seat belt reminder system uses both visual and audible signals. A reminder chime with a red light on the instrument panel.

The system will always illuminate the seat belt reminder lamp for four to eight seconds when the ignition switch is turned to the ON position. The CHIME will sound during the same time interval if the driver's seat belt is not fastened. Passenger belts are not connected to the system.

HEADLAMPS REMINDER

These are the conditions that have to be met for the headlamps on, chime function to work:

- Headlamps ON and
- Driver's door open and
- Key removed from the ignition switch.

Chime should sound until headlamps are turned off or the drivers door is closed or the key is placed into the RUN position.

KEY IN IGNITION REMINDER

The chime will activate if the drivers door is opened and the key is in the ignition switch, with the ignition switch in either the OFF, LOCK, or the accessory (ACC) position.

DOOR AJAR CHIME

The chime will sound once when:

- Door opened and
- Ignition in RUN position and
- Vehicle speed is present

TURN SIGNAL ON

The cluster shall remind the driver that either turn signal has been left on by continuously chiming after:

- Left or Right turn signal left ON for 1.0 mile (U.S.), 4 km (export), 1.6 km (UK), and
- Vehicle speed of 15 mph or greater.

PARK BRAKE REMINDER

The cluster shall chime 10 times and continuously flash the brake indicator when:

- Park brake is activated and
- Vehicle speed greater than 3 mph is present.

LOW FUEL REMINDER

When the fuel level drops to about 1/8 tank, the fuel symbol will light and a single chime will sound. The light will remain on until fuel is added. If the fuel level drops to about 1/16 of a tank, the fuel symbol will flash several times and the chime will sound several times.

REVERSE CHIME (DIESEL and TURBO ONLY EQUIPPED WITH THE GETRAG MANUAL TRANSMISSION)

The chime provides the driver with an audible confirmation of the reverse gear selection with the Getrag manual transmission. When the vehicle is placed in REVERSE, with the ignition switch in the

CHIME/BUZZER (Continued)

RUN position, the chime will sound six times (about 2 seconds). The chime will be a “fast” chime (same as door ajar). The transmission has reverse gear adjacent to first gear. There is a 6-7 second delay to accommodate mandatory bulb check and chimes (airbag, etc). The cluster monitors the reverse circuit and chime as required.

DIAGNOSIS AND TESTING

DIAGNOSIS AND TESTING - BRAKE/PARK BRAKE INDICATOR

The brake/park brake indicator illuminates when the parking brake is applied with the ignition switch turned to the ON position. The same lamp will also illuminate if one of the two (hydraulic or ABS) service brake systems fail when the brake pedal is applied.

To test the system:

- As the ignition switch is turned to the START position the lamp should light.
- Turn ignition switch to the ON position and apply the parking brake. The lamp should light.

If lamp fails to light inspect for:

- A burned out lamp
- Loose, corroded or damaged socket
- A damaged circuit board
- A broken or disconnected wire at the switch
- Defective switch

To test the service brake warning system, refer to Brakes, Diagnosis and Testing, Base Brake System Diagnosis Charts, Red Brake Warning Lamp.

DIAGNOSIS AND TESTING - CHIME CONDITIONS

NO TONE WHEN IGNITION SWITCH IS TURNED ON AND DRIVERS SEAT BELT IS UNBUCKLED

(1) Using an ohmmeter, with the seat belt fully retracted, check for continuity to ground at Pin 20 of the 26-way cluster harness connector. If OK, go to step 2. If not OK, repair as necessary.

(2) Using voltmeter, check for battery feed at Pin 4 of the 26-way cluster harness connector. Check for ignition feed at Pin 14 of the 26-way cluster harness connector. If not OK, repair as necessary.

NO FASTEN SEAT BELT LAMP WHEN IGNITION SWITCH IS ON

(1) Check for battery feed at cluster harness connector Pin 4.

(2) Check for ignition feed at cluster harness connector Pin 14. Repair as necessary.

NO TONE WHEN HEADLAMPS ARE ON AND DRIVERS DOOR IS OPEN

(1) Remove the key from the ignition.

(2) Check left door jamb switch for good ground when drivers door is open.

(3) Check for ground at Pin 1 of the 26-way cluster harness connector.

(4) Check for battery feed at cluster harness connector Pin 4 of the 26-way cluster harness connector.

(5) Check for NO voltage at Pin 14. Ignition voltage must not be present for the chime to work.

(6) Check headlamp switch.

NO TONE WHEN KEY IS LEFT IN IGNITION AND DRIVERS DOOR IS OPEN

(1) Check for continuity to ground at Pin 1 of the 26-way cluster harness connector. If OK, go to Step 4. If not OK, repair as necessary.

(2) Check pin 19 of the 26-way connector to ground while pulling key out/in from ignition switch. If not chime, check ignition switch for problems.

(3) Using voltmeter, check for battery feed at Pin 21 of the 26-way cluster harness connector. Check for NO ignition feed at Pin 14 of the 26-way cluster harness connector. If OK, go to Step 4. If not OK, repair as necessary.

(4) Open driver’s door and ensure the ignition key is in the OFF, LOCK, or ACC position. Check for continuity to ground at Pin 9 of the 26-way cluster harness connector. If ground OK, replace cluster printed circuit board. If no ground, check key-in switch or door switch wiring and repair as necessary.

DIAGNOSIS AND TESTING - FASTEN SEAT BELTS

To test the fasten seat belts function, turn the ignition switch to the ON position with the driver’s seat belt unbuckled and fully retracted. The seat belt warning lamp should light for four to eight seconds and the tone should sound three to five times.

If the lamp does not light, check the connection at the seat belt retractor. Replace as necessary.

DIAGNOSIS AND TESTING - KEY IN IGNITION

To test the key left in ignition function, insert key into the ignition and open the driver’s door. Chime should sound until key is removed from ignition or driver’s door is closed.

If these conditions are met and there is still a problem with the system, refer to Chime System Conditions in this section for further diagnosis and testing.

ELECTRONIC CONTROL MODULES

TABLE OF CONTENTS

	page
CONTROLLER ANTILOCK BRAKE	
DESCRIPTION	1
OPERATION	1
REMOVAL	2
INSTALLATION	3
DATA LINK CONNECTOR	
DESCRIPTION	3
OPERATION	3
HEATED SEAT MODULE	
DESCRIPTION	3
OPERATION	4
DIAGNOSIS AND TESTING - HEATED SEAT MODULE	4
REMOVAL	5
INSTALLATION	5
POWERTRAIN CONTROL MODULE	
DESCRIPTION	
OPERATION - SENSOR RETURN - PCM INPUT	5
OPERATION - DATA BUS COMMUNICATION RECEIVE - PCM INPUT	5
OPERATION - IGNITION SENSE - PCM INPUT	5
OPERATION - PCM GROUND	5
OPERATION	
OPERATION	6
OPERATION - 5 VOLT SUPPLY - PCM OUTPUT	10
STANDARD PROCEDURE	
STANDARD PROCEDURE - OBTAINING DIAGNOSTIC TROUBLE CODES	10
STANDARD PROCEDURE - PINION FACTOR SETTING	10
STANDARD PROCEDURE - QUICK LEARN PROCEDURE	10
REMOVAL	
REMOVAL - 1.6L	11
REMOVAL - 2.0, 2.4, and 2.4L Turbo	12
INSTALLATION	
INSTALLATION - 1.6L	14
INSTALLATION - 2.0, 2.4, and 2.4L TURBO	15
SENTRY KEY IMMOBILIZER MODULE	
DESCRIPTION	15
OPERATION	16
STANDARD PROCEDURE - SENTRY KEY IMMOBILIZER SYSTEM INITIALIZATION	16
REMOVAL	16
INSTALLATION	17
TRANSMISSION CONTROL MODULE	
DESCRIPTION	17
OPERATION	17
REMOVAL	20
INSTALLATION	20

CONTROLLER ANTILOCK BRAKE

DESCRIPTION

The controller antilock brake (CAB) is a microprocessor-based device which monitors the ABS system during normal braking and controls it when the vehicle is in an ABS stop. The CAB uses a 24-way electrical connector on the vehicle wiring harness. The power source for the CAB is through the ignition switch in the RUN or ON position. The CAB is on the PCI bus.

The CAB is mounted to the HCU as part of the Integrated Control Unit (ICU) (Fig. 1). Attached to the bottom of the HCU, it can be viewed from below, just above the transaxle and left halfshaft (Fig. 2). For information on the ICU, (Refer to 5 - BRAKES/HYDRAULIC/MECHANICAL/ICU (INTEGRATED CONTROL UNIT) - DESCRIPTION)

OPERATION

The primary functions of the controller antilock brake (CAB) are to:

- monitor the antilock brake system for proper operation.
- detect wheel locking or wheel slipping tendencies by monitoring the speed of all four wheels of the vehicle.
- control fluid modulation to the wheel brakes while the system is in an ABS mode or the traction control system is activated.
- store diagnostic information.
- provide communication to the DRBIII® scan tool while in diagnostic mode.

The CAB constantly monitors the antilock brake system for proper operation. If the CAB detects a fault, it will send a message to the mechanical instrument cluster (MIC) instructing it to turn on the amber ABS warning indicator lamp and disable the

CONTROLLER ANTILOCK BRAKE (Continued)

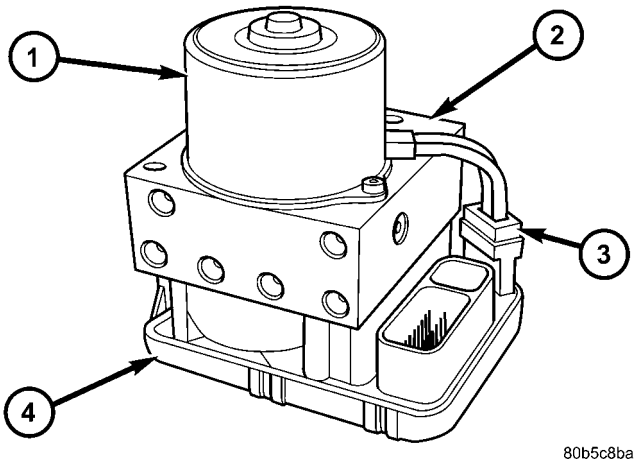

Fig. 1 Integrated Control Unit (ICU)

1 - PUMP/MOTOR
2 - HCU
3 - PUMP/MOTOR WIRING CONNECTOR
4 - CAB

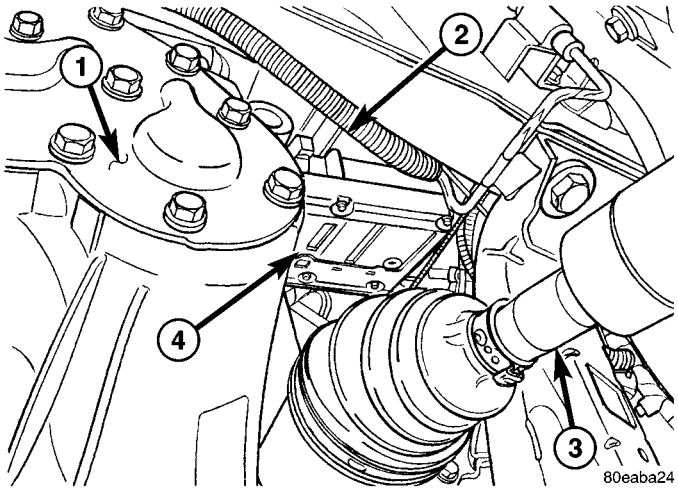

Fig. 2 CAB Location In Vehicle

1 - TRANSAXLE
2 - HCU
3 - LEFT HALFSHAFT
4 - CAB

antilock braking system. The normal base braking system will remain operational.

The CAB continuously monitors the speed of each wheel through the signals generated by the wheel speed sensors to determine if any wheel is beginning to lock. When a wheel locking tendency is detected, the CAB commands the CAB command coils to actuate. The CAB command coils then open and close the valves in the HCU that modulate brake fluid pressure in some or all of the hydraulic circuits. The CAB continues to control pressure in individual hydraulic circuits until a locking tendency is no longer present.

The CAB contains a self-diagnostic program that monitors the antilock brake system for system faults. When a fault is detected, the amber ABS warning lamp is turned on and the fault diagnostic trouble code (DTC) is then stored in a diagnostic program memory. These DTC's will remain in the CAB memory even after the ignition has been turned off. The DTC's can be read and cleared from the CAB memory by a technician using the DRB scan tool. If not cleared with a DRB scan tool, the fault occurrence and DTC will be automatically cleared from the CAB memory after the identical fault has not been seen during the next 3,500 miles of vehicle operation.

CONTROLLER ANTILOCK BRAKE INPUTS

- wheel speed sensors (four)
- brake lamp switch
- ignition switch
- system relay voltage
- ground
- traction control lamp actuation (if equipped)
- diagnostic communication (PCI)

CONTROLLER ANTILOCK BRAKE OUTPUTS

- amber ABS warning indicator lamp actuation (through MIC)
- red BRAKE warning indicator lamp actuation (through MIC)
- traction control lamp (if equipped)
- diagnostic communication. (PCI)

REMOVAL

(1) Disconnect battery negative cable.

(2) Raise vehicle. (Refer to LUBRICATION & MAINTENANCE/HOISTING - STANDARD PROCEDURE)

(3) Disconnect pump/motor connector from CAB (Fig. 3).

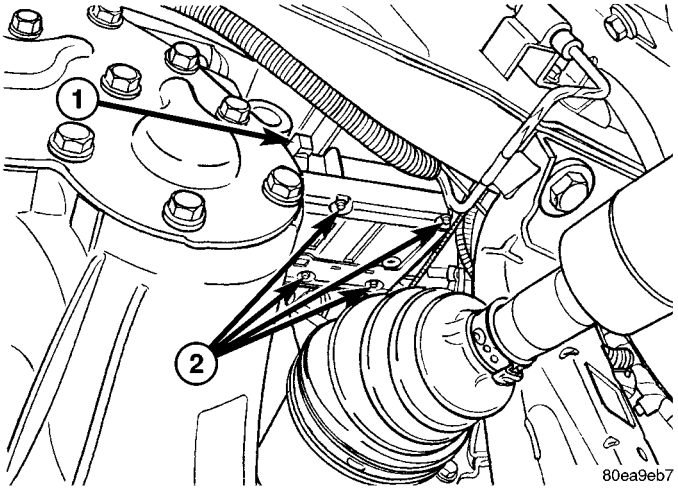

Fig. 3 CAB Mounting

1 - PUMP/MOTOR CONNECTOR
2 - CAB MOUNTING SCREWS

CONTROLLER ANTILOCK BRAKE (Continued)

(4) Remove four screws securing CAB to HCU half of ICU (Fig. 3). Remove CAB from HCU.

(5) Pull outward on CAB connector lock and disconnect 24–way wiring connector. Remove CAB from vehicle.

INSTALLATION

(1) Connect 24–way wiring connector to CAB and push in connector lock.

(2) Align CAB with HCU half of ICU, then slide CAB up over HCU valves. Install four CAB mounting screws (Fig. 3). Tighten mounting screws to 2 N·m (17 in. lbs.) torque.

(3) Connect pump/motor connector (Fig. 3).

(4) Lower vehicle.

(5) Connect battery negative cable.

(6) Connect DRBIII® to vehicle to initialize system. Check and clear any faults.

DATA LINK CONNECTOR

DESCRIPTION

The data link connector is located inside the vehicle, below instrument panel next to the center column (Fig. 4) .

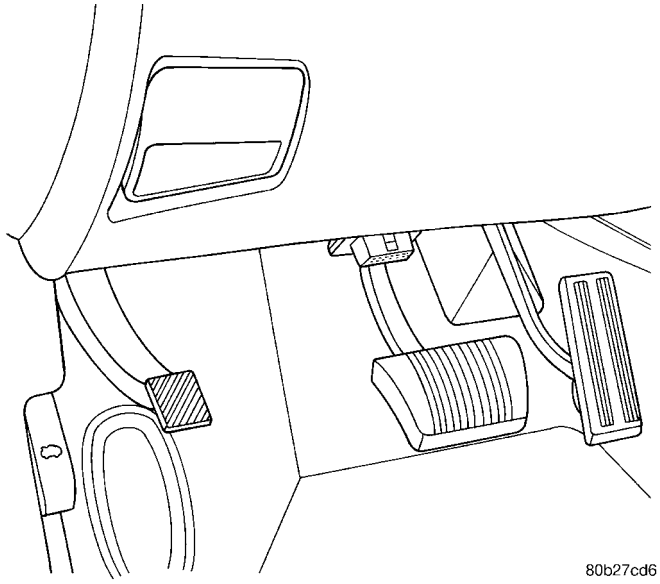

Fig. 4 DATA LINK CONNECTOR

OPERATION

The data link connector (diagnostic connector) links the DRB scan tool with the Powertrain Control Module (PCM). Refer to On-Board Diagnostics in the General Diagnosis section of this group.

HEATED SEAT MODULE

DESCRIPTION

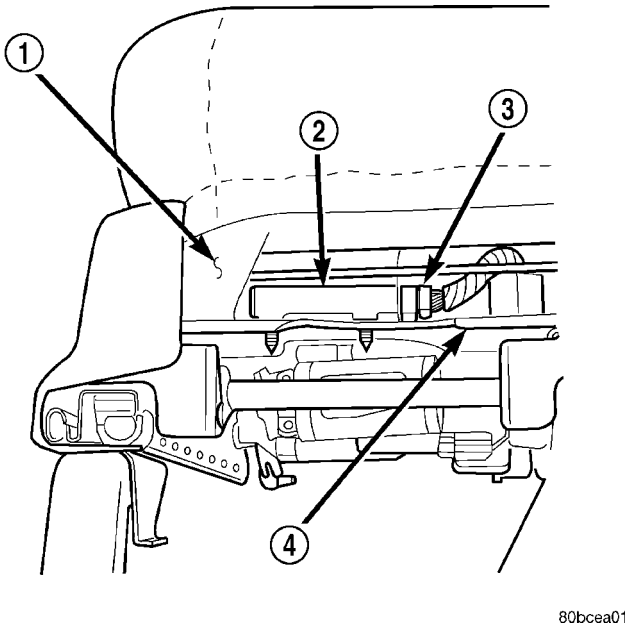

Fig. 5 HEATED SEAT MODULE LOCATION - TYPICAL

1 - SEAT CUSHION FRAME
2 - HEATED SEAT MODULE
3 - WIRE HARNESS CONNECTOR
4 - POWER SEAT TRACK FRONT BRACKET

One heated seat module is used per vehicle to control both front heated seats. The heated seat module (Fig. 5) is located on the passenger seat cushion pan, where it is secured with two push-in type plastic fasteners. The module is encased within a small, rectangular, molded plastic housing with a single connector receptacle that allows it to be connected to all of the required inputs and outputs through the power seat wire harness.

The heated seat module is a electronic microprocessor controlled device that is designed to monitor the inputs and control the outputs of the heated seat system. The heated seat module is programmed to provide two levels of heating for each front seat. The Low temperature set point is about 36° C (97° F) and the High temperature set point is about 41° C (105° F). The heated seat module is also programmed to perform some self-diagnosis. If the module detects a shorted or open heating element or a NTC heated seat sensor out of range the module will flash the heated seat switch indicator LED's, to inform the mechanic or operator that a problem exists with the heated seat system. Refer to heated seat system diagnosis and testing for additional information.

HEATED SEAT MODULE (Continued)

The heated seat module cannot be adjusted or repaired. If a module is damaged or faulty, the entire module must be replaced.

OPERATION

The heated seat module operates on battery current received through a fuse in the Junction Block (JB) on a fused ignition switch output (run-acc) circuit so that the heated seat system will only operate when the ignition switch is in the On or Accessory positions. The heated seat module is grounded at all times through a ground feed from a two wire take out and eyelet terminal connector of the power seat wire harness that is secured by a ground screw to the top of the seat crossmember under each front seat. Inputs to the heated seat module include a seat heater switch MUX circuit for each of the two heated seat switches, heated seat sensor inputs from the seat cushions of each front seat, and battery current from the power seat circuit breaker in the JB received through the energized heated seat relay on two heated seat relay output circuits. Outputs from the heated seat module include a battery voltage reference to the heated seat sensors on a sensor feed circuit, a battery current feed to the two heated seat element circuits on separate heated seat driver circuits, and separate Lo and Hi driver circuits for each of the heated seat switch Light-Emitting Diode (LED) indicator lamps.

When a driver or passenger heated seat switch request signal is received by the heated seat module, the module energizes the proper switch LED indicator lamp (Lo or Hi) by pulling the LED driver circuit to ground. This provides an indication to the vehicle operator that the heated seat system is operating and whether the Hi or Lo heat mode is selected. At the same time, the heated seat module energizes the heated seat sensor feed circuit and the sensor provides the module with a heat sense input indicating the surface temperature of the selected seat cushion. If the seat cushion surface temperature input is below the temperature set point for the selected heat mode, the heated seat module energizes an N-channel Field Effect Transistor (N-FET) within the module. The N-FET switches battery current to the heated seat elements in the selected seat cushion and back. When the heated seat sensor input indicates the correct temperature set point has been achieved, the heated seat module de-energizes the N-FET which switches off the battery current to the heated seat elements. The heated seat module will continue to cycle the N-FET as needed to maintain the selected temperature set point.

If the heated seat module detects a heated seat sensor value input that is out of range or a shorted or open heated seat element circuit, it will automatically de-energize the N-FET and switch off the battery current to the affected heated seat elements. The heated seat module will also notify the vehicle operator or the repair technician of this condition by flashing the Hi and/or Lo LED indicator lamps in the affected heated seat switch in a prescribed sequence as a self-diagnostic feedback. Refer to Diagnosis and Testing for the proper heated seat system diagnosis and testing procedures.

DIAGNOSIS AND TESTING - HEATED SEAT MODULE

Refer to the appropriate wiring information in **Wiring Diagrams**. The wiring information includes wiring diagrams, proper wire and connector repair procedures, further details on wire harness routing and retention, as well as pin-out and location views for the various wire harness connectors, splices and grounds.

(1) If a heated seat fails to heat and one or both of the LED indicator lamps on a heated seat switch flash, refer to **Heated Seat System Diagnosis and Testing**.

(2) Test the appropriate Heated Seat Switch, refer to the procedure in the Heated Seats section of this manual.

(3) Test the Heated Seat Sensor, refer to the procedure in the Heated Seats section of this manual.

(4) Test the Heated Seat Element, refer to the procedure in the Heated Seats section of this manual.

(5) Disconnect the heated seat module connector receptacle. Using an ohmmeter, check for continuity between the **ground circuit** cavity and a good ground. If OK, go to Step 6. If not OK, repair the open ground circuit to ground as required.

(6) Disconnect the heated seat module connector receptacle. Using an voltmeter, check for voltage on the **B+ circuit** cavity. If OK, go to Step 7. If not OK, repair the open B+ circuit as required.

(7) Replace the heated seat module with a known good module. Test operation of the heated seat system. If system works, OK repair complete. If system is still inoperative a short or open exists in the heated seat system wiring. Using Wiring Diagrams as a guide, check the individual circuits until the short or open is found.

HEATED SEAT MODULE (Continued)

REMOVAL

WARNING: THERE ARE MANY SHARP METAL EDGES ON THE SEAT CUSHION FRAME AND SEAT ADJUSTER RAILS UNDER THE SEAT. WHEN PERFORMING THIS SERVICE, A LONG-SLEEVED SHIRT AND GLOVES SHOULD BE WORN IN ORDER TO AVOID UNNECESSARY CUTS AND ABRASIONS TO EXPOSED SKIN.

(1) Move the passenger power seat to its full up and full rear stop positions.

(2) Disconnect and isolate the battery negative cable.

(3) Working under the seat, release the two plastic push-in fasteners from either the module or the mounting holes in the power seat cushion pan (Fig. 6).

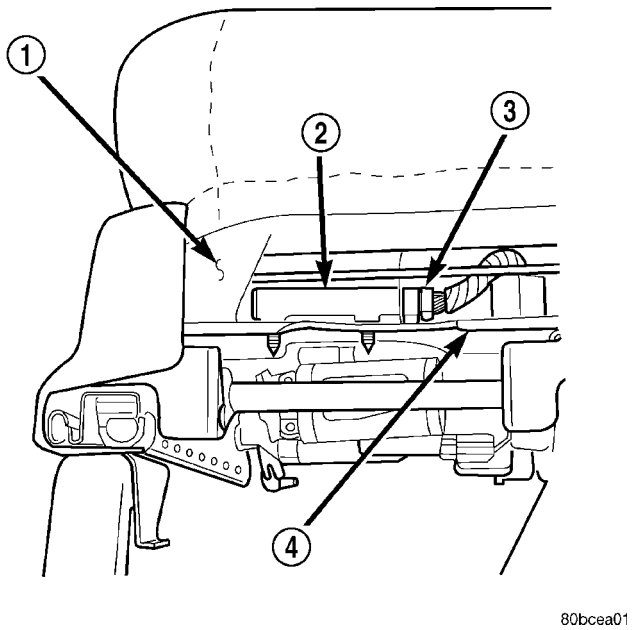

Fig. 6 Heated Seat Module Location- Typical

1 - SEAT CUSHION FRAME
2 - HEATED SEAT MODULE
3 - WIRE HARNESS CONNECTOR
4 - POWER SEAT TRACK FRONT BRACKET

(4) Disconnect the power seat wire harness connector from the heated seat module connector receptacle.

(5) Remove the heated seat module from the power seat track.

INSTALLATION

(1) If the two plastic push-in fasteners for the heated seat module were damaged during removal, install new fasteners onto the heated seat module.

(2) Reconnect the power seat wire harness connector to the heated seat module connector receptacle. Be certain that the cavities in the power seat wire harness connector are aligned with the terminals in the heated seat module connector receptacle before pushing the connector firmly into place.

(3) Install the heated seat module on the power seat cushion pan.

(4) Reconnect the battery negative cable.

POWERTRAIN CONTROL MODULE

DESCRIPTION

OPERATION - SENSOR RETURN - PCM INPUT

The sensor return circuit provides a low electrical noise ground reference for all of the systems sensors. The sensor return circuit connects to internal ground circuits within the Powertrain Control Module (PCM).

OPERATION - DATA BUS COMMUNICATION RECEIVE - PCM INPUT

The PCM uses the SCI communication bus to preform engine diagnostics and flash operations. The transmission side of the PCM uses the SCI communication bus to flash new software. However, diagnostics is performed via the vehicles J1850 bus for the transmission side of the PCM.

OPERATION - IGNITION SENSE - PCM INPUT

The ignition sense input informs the Powertrain Control Module (PCM) that the ignition switch is in the crank or run position.

OPERATION - PCM GROUND

Ground is provided through multiple pins of the PCM connector. Depending on the vehicle there may be as many as two different ground pins. There are power grounds and sensor grounds.

The power grounds are used to control the ground side relays, solenoids, ignition coil or injectors. The signal ground is used for any input that uses sensor return for ground, and the ground side of any internal processing component.

The PCM case is shielded to prevent RFI and EMI. The PCM case is grounded and must be firmly attached to a good, clean body ground.

Internally all grounds are connected together, however there is noise suppression on the sensor ground. For EMI and RFI protection the housing and cover are also grounded separately from the ground pins.

POWERTRAIN CONTROL MODULE (Continued)

OPERATION

OPERATION

The PCM receives input signals from various switches and sensors that are referred to as PCM Inputs. Based on these inputs, the PCM adjusts various engine, transmission, and vehicle operations through devices that are referred to as PCM Outputs (Fig. 7).

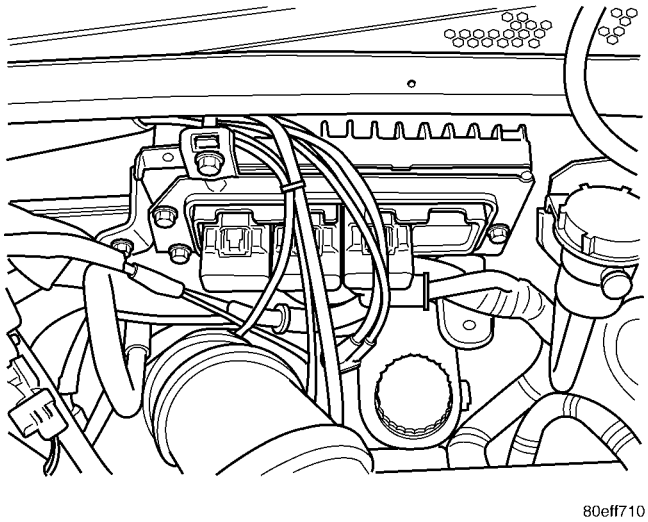

Fig. 7 PCM

NOTE: PCM Inputs:

- Air Conditioning Controls
- Ambient Air temperature Sensor
- ASD Sense
- Baro/Tip (Turbo)
- Battery Voltage
- Battery Temperature Sensor
- Brake Switch
- Camshaft Position Sensor
- Clutch Upstop Switch (1.6L)
- Clutch Interlock
- Crankshaft Position Sensor
- Cruise Control Switch
- Electronic Throttle Control (1.6L only)
- Engine Coolant Temperature Sensor
- Fuel Level Sensor (Bus message)
- Ignition Switch
- Intake Air Temperature Sensor
- J1850
- Knock Sensor (1.6, 2.0, 2.4L only)
- Natural Vacuum Leak Detection (NVLD)
- Manifold Absolute Pressure (MAP) Sensor
- Oil Pressure Switch
- Oxygen Sensors
- Pedal Position Sensor (1.6L has 2 sensors)
- Power Steering Pressure Switch
- SCI Receive
- Speed Control Switches
- Throttle Position Sensor (1.6L has 2 TPS Sensors)
- Transmission Control Relay (Switched B+)
- Transmission Input Shaft Speed Sensor
- Transmission Output Shaft Speed Sensor
- Transmission Pressure Switches (L/R, 2/4, OD)
- Transmission Range Sensor (TRS)
- Transmission Oil Temperature Sensor (Integral to TRS)
- Vehicle Speed Sensor (MTX-equipped models)

NOTE: PCM Outputs:

- Air Conditioning Clutch Relay
- Auto Shutdown (ASD) Relay
- Charging Indicator Lamp (Bus Message)
- SCI Transmit
- Proportional Purge Solenoid
- EGR Solenoid
- Electronic Throttle Control (1.6L only)
- Fuel Injectors
- Fuel Pump Relay
- Generator Field
- Idle Air Control Motor (2.0/2.4L)
- Ignition Coils
- J1850
- Malfunction Indicator (Check Engine) Lamp (Bus Message)
- Oxygen Sensors Heater Controls
- Radiator Fan Relays
- Speed Control Solenoids (2.0/2.4L)
- Transmission Control Relay
- Transmission Solenoids (LR/CC, 2/4, OD, and UD)
- Transmission PRNDL Position (to Cluster)
- Transmission Torque Reduction Request (Internal to PCM)
- Transmission Temperature (Internal to PCM and a Bus Message)
- Vehicle Speed (Manual Transmission)
- 2 Electronic Throttle Control Outputs (1.6L)

Based on inputs it receives, the PCM adjusts fuel injector pulse width, idle speed, ignition spark advance, ignition coil dwell and EVAP canister purge operation. The PCM also determines the appropriate transmission shift schedule and shift points, depending on the present operating conditions and driver demand. The PCM regulates the cooling fan, air conditioning and speed control systems. The PCM changes generator charge rate by adjusting the generator field. The PCM also performs diagnostics.

The PCM adjusts injector pulse width (air-fuel ratio) based on the following inputs.

- Battery voltage

POWERTRAIN CONTROL MODULE (Continued)

- Coolant temperature
- Exhaust gas content (oxygen sensor)
- Engine speed (crankshaft position sensor)
- Intake air temperature
- Manifold absolute pressure
- Pedal Position Sensor (1.6L has 2 sensors)
- Throttle position

The PCM adjusts ignition timing based on the following inputs.

- Coolant temperature
- Engine speed (crankshaft position sensor)
- Knock sensor
- Manifold absolute pressure
- Pedal Position Sensor (1.6L has 2 sensors)
- Throttle position
- Transmission gear selection (park/neutral switch)
- Intake air temperature

The PCM also adjusts engine idle speed through the idle air control motor based on the following inputs.

- Air conditioning sense
- Battery voltage
- Battery temperature
- Brake switch
- Coolant temperature
- Engine speed (crankshaft position sensor)
- Engine run time
- Manifold absolute pressure
- Pedal Position Sensor (1.6L has 2 sensors)
- Power steering pressure switch
- Throttle position
- Transmission gear selection (park/neutral switch)
- Vehicle distance (speed)

The Auto Shutdown (ASD) and fuel pump relays are located in the Power Distribution Center (PDC).

The camshaft position sensor and crankshaft position sensor signals are sent to the PCM. If the PCM does not receive the signal within approximately 1 second of engine cranking, it deactivates the ASD relay and fuel pump relay. When these relays are deactivated, power is shut off from the fuel injectors, ignition coils, oxygen sensor heating elements and fuel pump.

The PCM contains a voltage converter that changes battery voltage to a regulated 5 volts direct current to power the camshaft position sensor, crankshaft position sensor, manifold absolute pressure sensor, throttle position sensor, A/C pressure switch, A/C pressure transducer, and vehicle speed sensor.

Powertrain Control Module Connectors

The PCM is an engine and transmission controller module all in one, if the vehicle is equipped with an automatic transmission. The PCM uses four wiring harness connectors to receive and send engine and transmission data. To ease assembly, the mating wiring harness connector is color-coded. Each module connector cavity has its own unique color identification stripe located on the outside of each connector cavity.

The PCM module utilizes four wiring harness connectors as described:

- Connector Cavity A is for Power & Ground (Black)
- Connector Cavity B is for Engine Side (Orange)
- Connector Cavity C is for Headlamp & Dash (White)
- Connector Cavity D is for Transmission (Green) If equipped

NOTE: Connector Cavities A, B, C, And D must be connected prior to battery connection and ignition key on to avoid setting erroneous controller fault codes. It is also recommended that cavity A connector is made prior to any other connectors.

TRANSMISSION CONTROL

CLUTCH VOLUME INDEX (CVI)

An important function of the PCM is to monitor Transmission Clutch Volume Index (CVI). CVIs represent the volume of fluid needed to compress a clutch pack.

The PCM monitors gear ratio changes by monitoring the Input and Output Speed Sensors. The Input, or Turbine Speed Sensor sends an electrical signal to the PCM that represents input shaft rpm. The Output Speed Sensor provides the PCM with output shaft speed information.

By comparing the two inputs, the PCM can determine transaxle gear ratio. This is important to the CVI calculation because the PCM determines CVIs by monitoring how long it takes for a gear change to occur (Fig. 8).

Gear ratios can be determined by using the DRBIII® Scan Tool and reading the Input/Output Speed Sensor values in the “Monitors” display. Gear ratio can be obtained by dividing the Input Speed Sensor value by the Output Speed Sensor value.

For example, if the input shaft is rotating at 1000 rpm and the output shaft is rotating at 500 rpm, then the PCM can determine that the gear ratio is 2:1. In direct drive (3rd gear), the gear ratio changes to 1:1. The gear ratio changes as clutches are applied and released. By monitoring the length of time it takes for the gear ratio to change following a shift request, the PCM can determine the volume of fluid used to apply or release a friction element.

The volume of transmission fluid needed to apply the friction elements are continuously updated for adaptive controls. As friction material wears, the volume of fluid need to apply the element increases.

POWERTRAIN CONTROL MODULE (Continued)

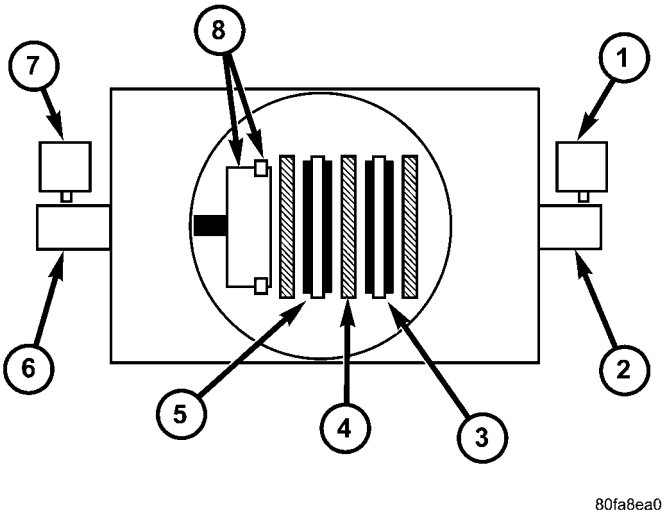

Fig. 8 Example of CVI Calculation

1 - OUTPUT SPEED SENSOR
2 - OUTPUT SHAFT
3 - CLUTCH PACK
4 - SEPARATOR PLATE
5 - FRICTION DISCS
6 - INPUT SHAFT
7 - INPUT SPEED SENSOR
8 - PISTON AND SEAL

Certain mechanical problems within the clutch assemblies (broken return springs, out of position snap rings, excessive clutch pack clearance, improper assembly, etc.) can cause inadequate or out-of-range clutch volumes. Also, defective Input/Output Speed Sensors and wiring can cause these conditions. The following chart identifies the appropriate clutch volumes and when they are monitored/updated:

CLUTCH VOLUMES				
Clutch	When Updated			Proper Clutch Volume
	Shift Sequence	Oil Temperature	Throttle Angle	
L/R	2-1 or 3-1 coast downshift	> 70°	< 5°	35 to 83
2/4	1-2 shift	> 110°	5 - 54°	20 to 77
OD	2-3 shift			48 to 150
UD	4-3 or 4-2 shift		> 5°	24 to 70

POWERTRAIN CONTROL MODULE (Continued)

TRANSMISSION SHIFT SCHEDULES

The PCM is programmed to allow it to select a variety of shift schedules. Shift schedule selection is dependent on the following:

- Shift lever position
- Throttle position
- Engine load
- Fluid temperature
- Software calibration level

As driving conditions change, the PCM appropriately adjusts the shift schedule. Refer to the following chart to determine the appropriate operation expected, depending on driving conditions.

Schedule	Condition	Expected Operation
Extreme Cold	Oil temperature at start-up below -16° F	Park, Reverse, Neutral and 2nd gear only (prevents shifting which may fail a clutch with frequent shifts)
Cold	Oil temperature at start-up above -12° F and below 36° F	– Delayed 2-3 upshift (approximately 22-31 mph) – Delayed 3-4 upshift (45-53 mph) – Early 4-3 costdown shift (approximately 30 mph) – Early 3-2 coastdown shift (approximately 17 mph) – High speed 4-2, 3-2, 2-1 kickdown shifts are prevented – No EMCC
Warm	Oil temperature at start-up above 36° F and below 80 degree F	– Normal operation (upshift, kickdowns, and coastdowns) – No EMCC
Hot	Oil temperature at start-up above 80° F	– Normal operation (upshift, kickdowns, and coastdowns) – Full EMCC, no PEMCC except to engage FEMCC (except at closed throttle at speeds above 70-83 mph)
Overheat	Oil temperature above 240° F or engine coolant temperature above 244° F	– Delayed 2-3 upshift (25-32 mph) – Delayed 3-4 upshift (41-48 mph) – 3rd gear FEMCC from 30-48 mph – 3rd gear PEMCC from 27-31 mph
Super Overheat	Oil temperature above 260° F	– All ″Overheat″ shift schedule features apply – 2nd gear PEMCC above 22 mph – Above 22 mph the torque converter will not unlock unless the throttle is closed or if a wide open throttle 2nd PEMCC to 1 kickdown is made

POWERTRAIN CONTROL MODULE (Continued)

OPERATION - 5 VOLT SUPPLY - PCM OUTPUT

The PCM supplies 5 volts to the following sensors:

- A/C pressure transducer
- Ambient Temperature sensor
- Battery temperature
- Camshaft Position Sensor (NGC)
- Crankshaft Position Sensor (NGC)
- Electronic Throttle Control (1.6L)
- Engine coolant temperature sensor
- Inlet Air Temperature Sensor
- Knock sensor
- Linear EGR solenoid (if equipped)
- Manifold absolute pressure sensor
- Oil Pressure Switch
- Pedal Position Sensor (1.6L)
- Throttle position sensor
- Vehicle Speed Sensor

STANDARD PROCEDURE

STANDARD PROCEDURE - OBTAINING DIAGNOSTIC TROUBLE CODES

BULB CHECK

Key on: Bulb illuminated until vehicle starts, as long as all once per trip (readiness) monitors completed. If monitors have **not** been completed, then: Key on: bulb check for about 5 to 8 seconds, lamp then flashes if once per trip (readiness) monitors have **not** been completed until vehicle is started, then MIL is extinguished.

OBTAINING DTC'S USING DRB SCAN TOOL

(1) Connect the DRB scan tool to the data link (diagnostic) connector. This connector is located in the passenger compartment; at the lower edge of instrument panel; near the steering column.

(2) Turn the ignition switch on and access the "Read Fault" screen.

(3) Record all the DTC's and "freeze frame" information shown on the DRB scan tool.

(4) To erase DTC's, use the "Erase Trouble Code" data screen on the DRB scan tool. **Do not erase any DTC's until problems have been investigated and repairs have been performed.**

STANDARD PROCEDURE - PINION FACTOR SETTING

NOTE: This procedure must be performed if the PCM/TCM has been replaced with a NEW or replacement unit. Failure to perform this procedure will result in an inoperative or improperly calibrated speedometer.

The vehicle speed readings for the speedometer are taken from the output speed sensor. The PCM/TCM must be calibrated to the different combinations of equipment (final drive and tires) available. Pinion Factor allows the technician to set the Powertrain/Transmission Control Module initial setting so that the speedometer readings will be correct. To properly read and/or reset the Pinion Factor, it is necessary to use a DRBIII® scan tool.

(1) Plug the DRBIII® scan tool into the diagnostic connector located under the instrument panel.

(2) Select the Transmission menu.

(3) Select the Miscellaneous menu.

(4) Select Pinion Factor. Then follow the instructions on the DRBIII® scan tool screen.

STANDARD PROCEDURE - QUICK LEARN PROCEDURE

The quick learn procedure requires the use of the DRBIII® scan tool. This program allows the PCM/TCM to recalibrate itself. This will provide the best possible transaxle operation.

NOTE: The quick learn procedure should be performed if any of the following procedures are performed:

- Transaxle Assembly Replacement
- Powertrain/Transmission Control Module Replacement
- Solenoid/Pressure Switch Assembly Replacement
- Clutch Plate and/or Seal Replacement
- Valve Body Replacement or Recondition

To perform the Quick Learn Procedure, the following conditions must be met:

- The brakes must be applied
- The engine speed must be above 500 rpm
- The throttle angle (TPS) must be less than 3 degrees
- The shift lever position must stay until prompted to shift to overdrive
- The shift lever position must stay in overdrive after the Shift to Overdrive prompt until the DRBIII® indicates the procedure is complete
- The calculated oil temperature must be above 60° and below 200°

(1) Plug the DRBIII® scan tool into the diagnostic connector. The connector is located under the instrument panel.

(2) Go to the Transmission screen.

(3) Go to the Miscellaneous screen.

(4) Select Quick Learn Procedure. Follow the instructions of the DRBIII® to perform the Quick Learn Procedure.

POWERTRAIN CONTROL MODULE (Continued)

REMOVAL

REMOVAL - 1.6L

The PCM engine control strategy prevents reduced idle speeds until after the engine operates for 320 km (200 miles). If the PCM is replaced after 320 km (200 miles) of usage, update the mileage and vehicle identification number (VIN) in the new PCM. Use the DRBIII® scan tool to change the mileage and VIN in the PCM. If this step is not done a Diagnostic Trouble Code (DTC) may be set. Refer to the appropriate Powertrain Diagnostic Manual and the DRBIII® scan tool.

The PCM attaches to a bracket which attaches to the dash panel welded brackets (Fig. 9).

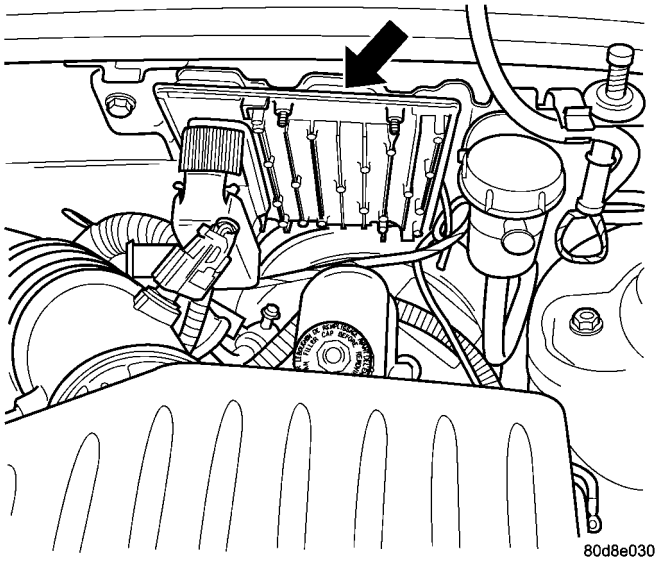

Fig. 9 PCM LOCATION

(1) Remove the air cleaner lid, disconnect the inlet air temperature sensor and makeup air hose (Fig. 10).

(2) Remove the negative battery cable (Fig. 11).

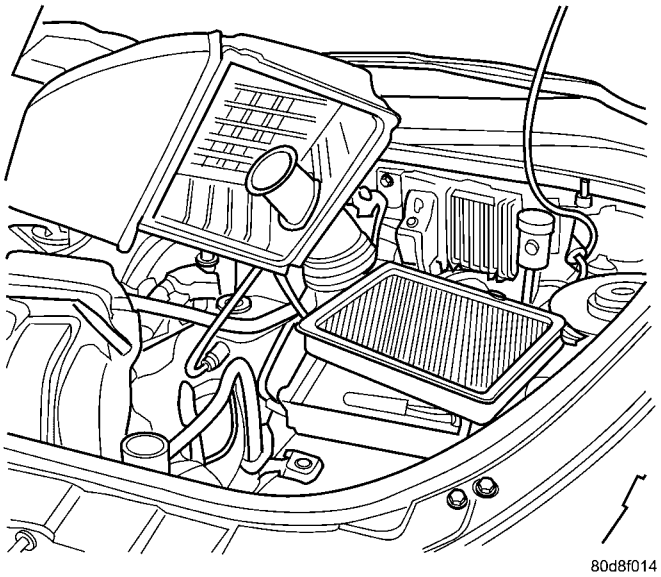

Fig. 10 AIR BOX COVER

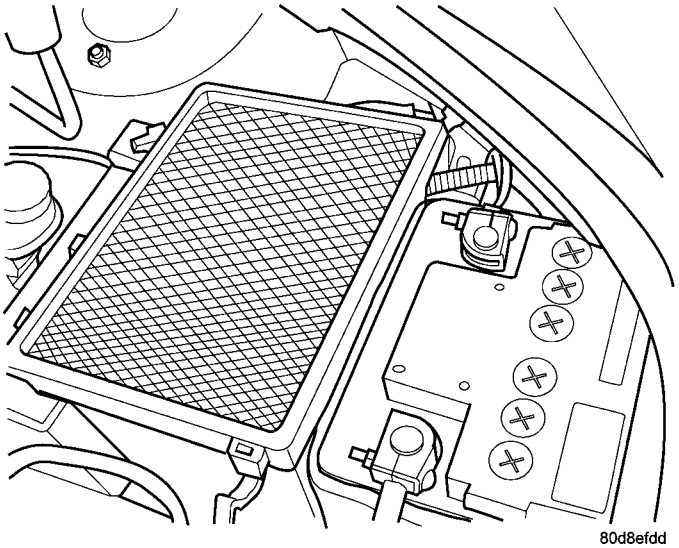

Fig. 11 NEGATIVE BATTERY CABLE

POWERTRAIN CONTROL MODULE (Continued)

(3) Unlock the PCM connector by pulling on the tab on the end of the PCM connector (Fig. 12).

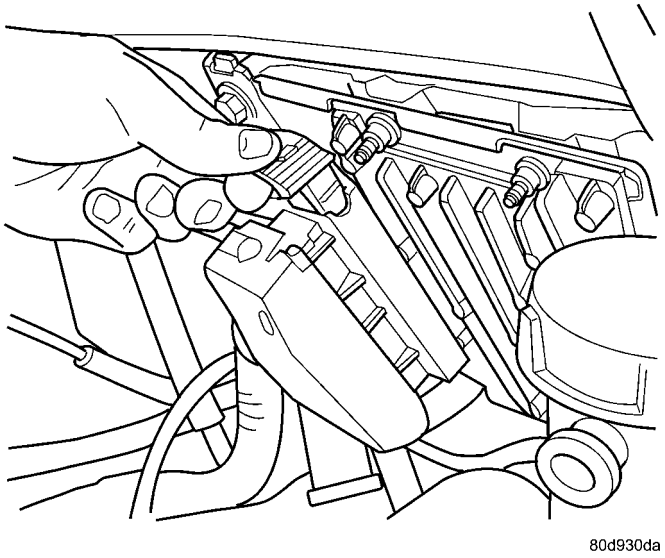

Fig. 12 UNLOCKING PCM CONNECTOR

(4) Remove electrical connector from the PCM (Fig. 13).

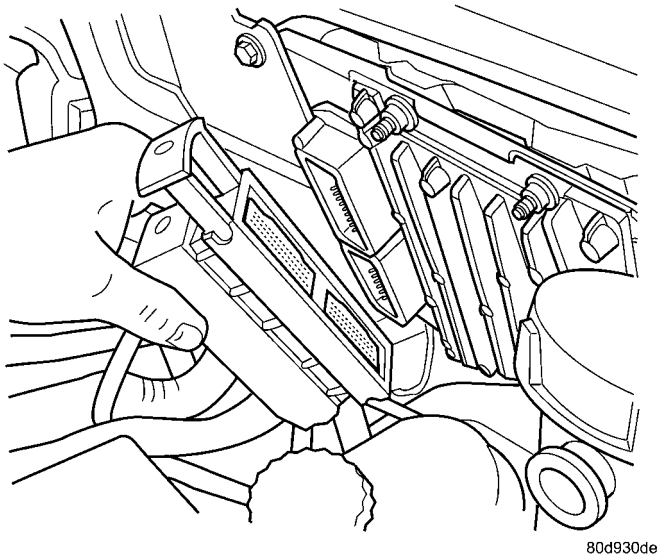

Fig. 13 PCM CONNECTOR

(5) Remove attaching nuts for PCM to bracket (Fig. 14).

(6) Lift PCM up to remove it from vehicle.

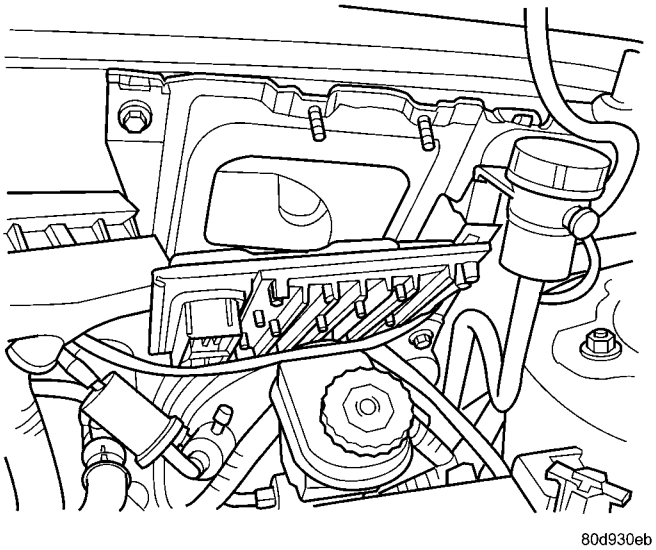

Fig. 14 PCM LOCATION

REMOVAL - 2.0, 2.4, and 2.4L Turbo

(1) Disconnect the negative battery cable.

(2) Lift vacuum line out from behind the upper support bracket (Fig. 15) and (Fig. 16).

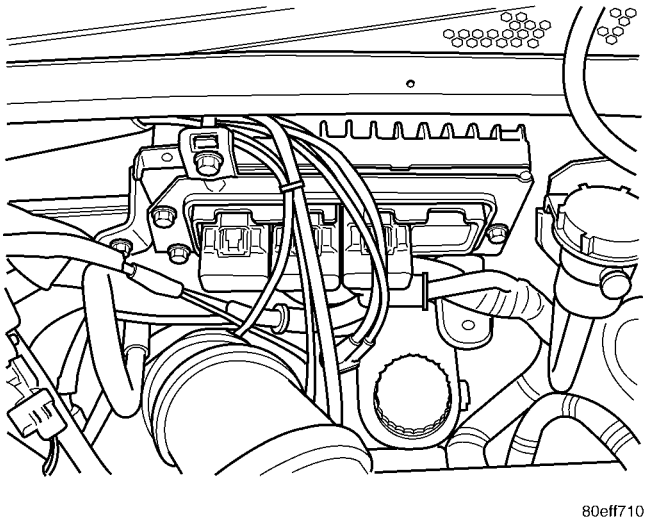

Fig. 15 Powertrain Control Module

POWERTRAIN CONTROL MODULE (Continued)

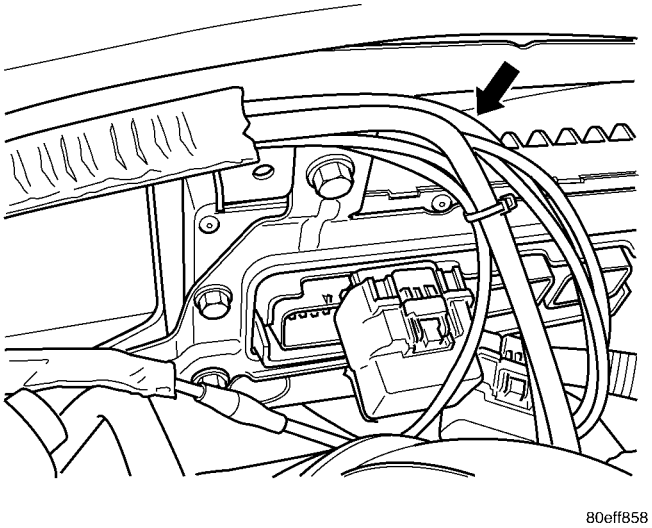

Fig. 16 VACUUM LINES

(3) Unlock and disconnect the 3 or 4 electrical connectors (Fig. 17) from the Powertrain Control Module (PCM).

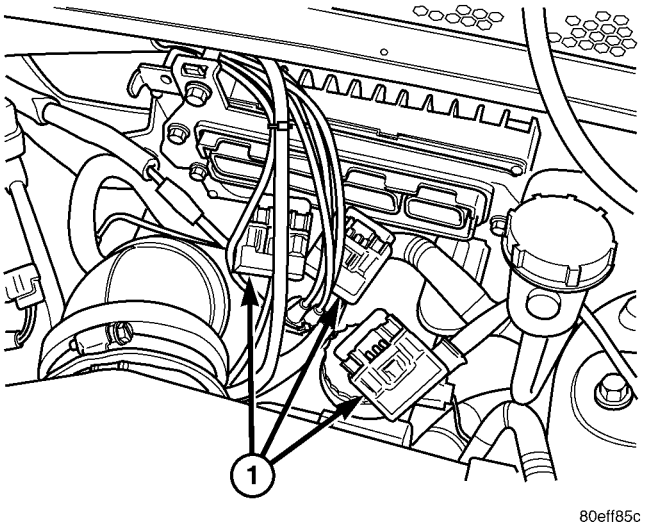

Fig. 17 ELECTRICAL CONNECTORS

1 - Electrical Connectors

(4) Remove the clutch reservoir and relocate (Fig. 18).

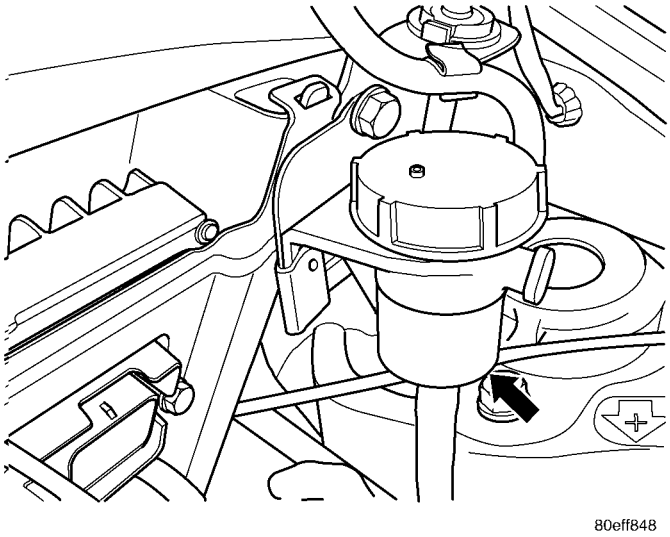

Fig. 18 CLUTCH RESERVOIR

(5) Remove the 3 mounting screws (Fig. 19) and (Fig. 20) from the PCM mounting bracket and remove PCM and bracket assembly (Fig. 21).

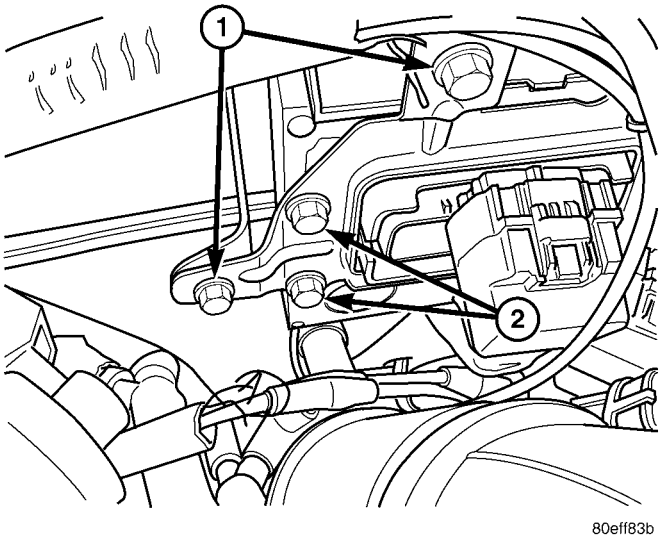

Fig. 19 PCM MOUNTING SCREWS

1 - Mounting Screws
2 - PCM Bracket Screws

POWERTRAIN CONTROL MODULE (Continued)

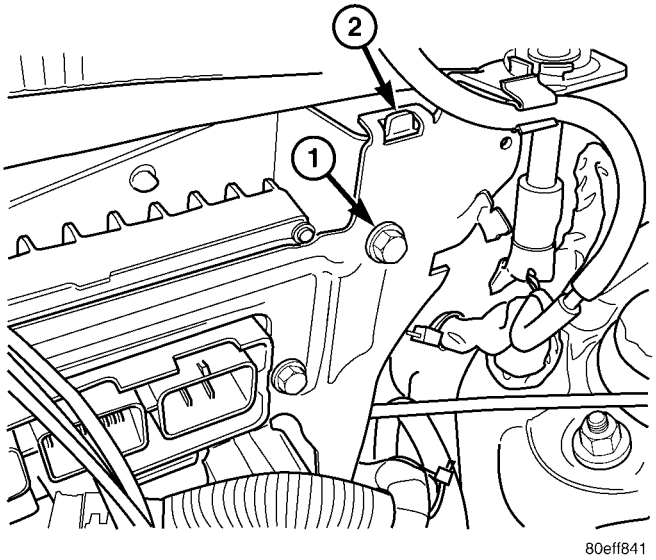

Fig. 20 PCM MOUNTING Screw AND LOCATION TAB

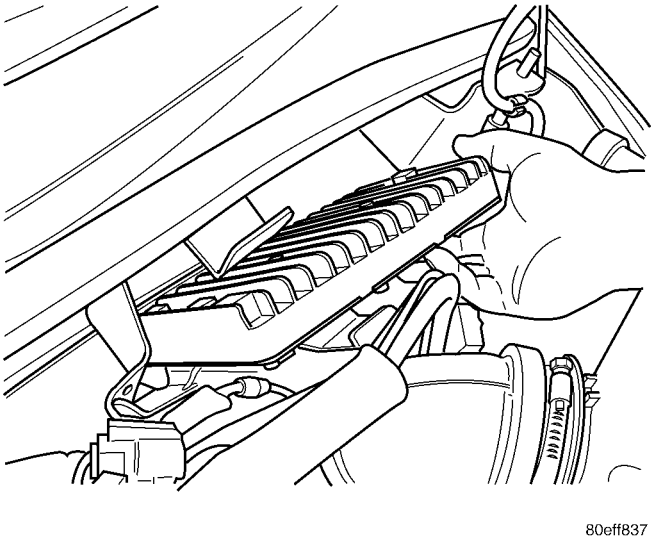

Fig. 21 PCM REMOVAL/INSTALLATION

(6) Remove the 3 screws from the PCM bracket to PCM (Fig. 22).

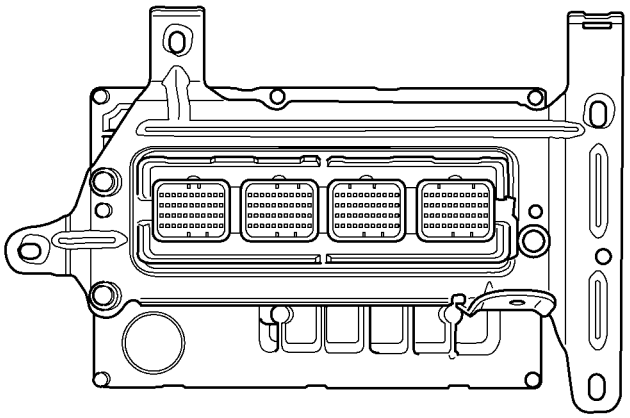

Fig. 22 PCM AND MOUNTING BRACKET

INSTALLATION

INSTALLATION - 1.6L

The PCM engine control strategy prevents reduced idle speeds until after the engine operates for 320 km (200 miles). If the PCM is replaced after 320 km (200 miles) of usage, update the mileage and vehicle identification number (VIN) in the new PCM. Use the DRBIII® scan tool to change the millage and VIN in the PCM. If this step is not done a Diagnostic Trouble Code (DTC) may be set. Refer to the appropriate Powertrain Diagnostic Manual and the DRBIII® scan tool.

The PCM attaches to a bracket which attaches to the dash panel welded bracket (Fig. 9).

(1) Install PCM. Tighten mounting nuts to 10.7 N·m (95 ins. lbs.) (Fig. 14).

(2) Attach electrical connectors to PCM (Fig. 13).

(3) Lock the PCM connector (Fig. 12).

(4) Install the negative battery cable (Fig. 11).

(5) Install the air cleaner lid, connect the inlet air temperature sensor and makeup air hose (Fig. 10).

POWERTRAIN CONTROL MODULE (Continued)

INSTALLATION - 2.0, 2.4, and 2.4L TURBO

(1) Install the PCM bracket and 3 screws to the PCM (Fig. 22) and tighten to 11.8 N·m (105 in. lbs.).

(2) Install the PCM and bracket assembly and locate the bracket on the tab (Fig. 20).

(3) Install the 3 mounting screws to the PCM mounting bracket (Fig. 19) and tighten to 10.7 N·m (95 in. lbs.).

NOTE: The electrical connector for the PCM are COLOR Coded.

(4) Connect and lock the 3 or 4 electrical connectors to the Powertrain Control Module (PCM) (Fig. 17).

(5) Relocate and install the clutch reservoir (Fig. 18).

(6) Connect the negative battery cable.

SENTRY KEY IMMOBILIZER MODULE

DESCRIPTION

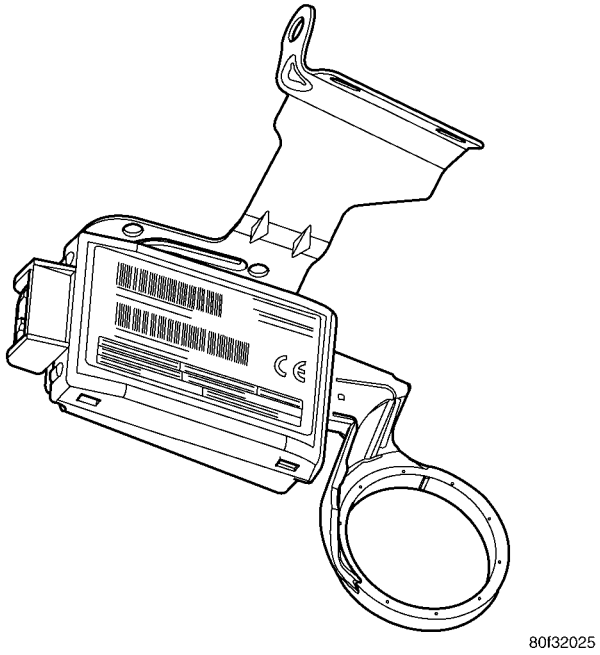

Fig. 23 SENTRY KEY IMMOBILIZER MODULE

The Sentry Key Immobilizer Module (SKIM) (Fig. 23) contains a Radio Frequency (RF) transceiver and a microprocessor. The SKIM retains in memory the ID numbers of any Sentry Key that is programmed to it. The maximum number of keys that may be programmed to each module is eight (8). The SKIM also communicates over the PCI bus with the Powertrain Control Module (PCM), the instrument cluster, and the DRB III® scan tool. The SKIM transmits and receives RF signals through a tuned antenna enclosed within a molded plastic ring formation that is integral to the SKIM housing. When the SKIM is properly installed on the steering column, the antenna ring fits snugly around the circumference of the ignition lock cylinder housing (Fig. 24). If this ring is not mounted properly, communication problems may arise in the form of transponder-related faults.

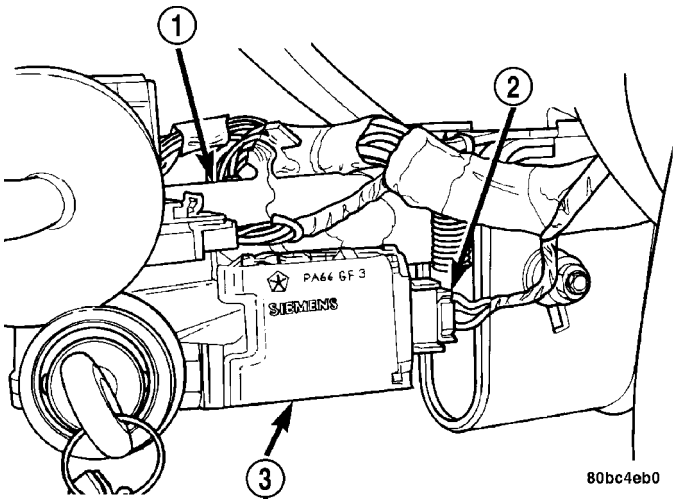

Fig. 24 SENTRY KEY IMMOBILIZER MODULE LOCATION

1 - STEERING COLUMN
2 - SKIM ELECTRICAL CONNECTOR
3 - SKIM

For added system security, each SKIM is programmed with a unique ″Secret Key″ code. This code is stored in memory and is sent over the PCI bus to the PCM and to each key that is programmed to work with the vehicle. The ″Secret Key″ code is therefore a common element found in all components of the Sentry Key Immobilizer System (SKIS). In the event that a SKIM replacement is required, the ″Secret Key″ code can be restored from the PCM by following the SKIM replacement procedure found in the DRB III® scan tool. Proper completion of this task will allow the existing ignition keys to be reprogrammed. Therefore, new keys will NOT be needed. In the event that the original ″Secret Key″ code can not be recovered, new ignition keys will be required. The DRB III® scan tool will alert the technician if key replacement is necessary. Another security code, called a PIN, is used to gain secured access to the SKIM for service. The SKIM also stores in its memory the Vehicle Identification Number (VIN), which it learns through a bus message from the PCM during initialization. The SKIS scrambles the information that is communicated between its components in order to reduce the possibility of unauthorized SKIM access and/or disabling.

SENTRY KEY IMMOBILIZER MODULE (Continued)

OPERATION

When the ignition switch is moved to the RUN position, the SKIM transmits an RF signal to the transponder in the ignition key. The SKIM then waits for a response RF signal from the transponder in the key. If the response received identifies the key as valid, the SKIM sends a ″valid key″ message to the PCM over the PCI bus. If the response received identifies the key as invalid or no response is received from the transponder in the ignition key, the SKIM sends an ″invalid key″ message to the PCM. The PCM will enable or disable engine operation based upon the status of the SKIM messages. It is important to note that the default condition in the PCM is ″invalid key.″ Therefore, if no response is received by the PCM, the engine will be immobilized after two (2) seconds of running.

The SKIM also sends indicator light status messages to the instrument cluster to tell that module how to operate the light. This may consist of turning the light ON for a three (3) second bulb test when the ignition switch is first turned to the ON position. It is also the method used to turn the light ON solid or to flash it after the indicator light test is complete to signify a fault in the SKIS. If the light comes ON and stays ON solid after the indicator light test, this signifies that the SKIM has detected a system malfunction and/or that the SKIS has become inoperative. If the SKIM detects an invalid key OR a key-related fault exists, the indicator light will flash following the indicator light test. The SKIM may also request an audible chime if the customer key programming feature is available and the procedure is being utilized. Refer to Electrical, Vehicle Theft Security, Transponder Key, Standard Procedure - Sentry Key Immobilizer System Transponder programming.

STANDARD PROCEDURE - SENTRY KEY IMMOBILIZER SYSTEM INITIALIZATION

The Sentry Key Immobilizer System (SKIS) initialization should be performed following a Sentry Key Immobilizer Module (SKIM) replacement. It can be summarized as follows:

(1) Obtain the vehicle's unique four-digit PIN assigned to its original SKIM from the vehicle owner, the vehicle's invoice, or from Chrysler's Customer Center.

(2) Using a DRB III® scan tool, select ″Theft Alarm,″ ″SKIM,″ ″Miscellaneous,″ and then ″SKIM Module Replaced.″

(a) Enter Secured Access Mode using the unique four-digit PIN.

(b) Program the vehicle's VIN number into the SKIM's memory.

(c) Program the country code into the SKIM's memory (for North America, choose US or domestic).

(d) The vehicle's unique Secret Key data will be retrieved from the PCM automatically. If this data is corrupt or not present, you will be prompted to cut new keys for this vehicle.

(3) Program all customer keys into the SKIM's memory.

This process will require that the SKIM to be in the Secured Access Mode. The PIN must be entered into the DRB III® scan tool before the SKIM will enter the Secured Access Mode. Once entered, Secured Access Mode shall be active until 60 seconds after the last command requiring secured access was received and acknowledged.

Two exceptions to this rule are:

- When you have used the 'erase all keys' command **OR**
- When you have just programmed a new key.

If either of these functions are performed successfully while in the Secured Access Mode, this mode will be exited immediately following the function.

NOTE: If a PCM is replaced, the unique 'Secret Key' data must be transferred from the SKIM to the new PCM using the PCM replacement procedure. This procedure requires the Secured Access Mode as well and can be found in the DRB III® scan tool.

REMOVAL

(1) Disconnect and isolate the battery negative remote cable.

(2) Remove Lower Instrument Panel Cover. Refer to Body, Instrument Panel, Lower Instrument Panel Cover, Removal.

(3) Remove the steering column upper and lower shrouds. Refer to Steering, Column, Column Shroud, Removal.

(4) Disengage the steering column wire harness from the Sentry Key Immobilizer Module (SKIM) (Fig. 25).

(5) Remove the two screws securing the SKIM to the top of the steering column (Fig. 25).

(6) Rotate the SKIM and its mounting bracket upwards and then to the side away from the steering column to slide the SKIM antenna ring from around the ignition switch lock cylinder housing (Fig. 25).

(7) Remove the SKIM from the vehicle.

SENTRY KEY IMMOBILIZER MODULE (Continued)

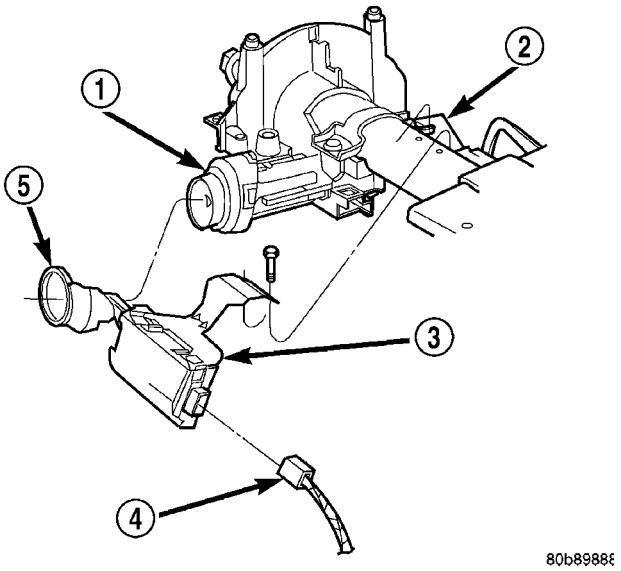

Fig. 25 SENTRY KEY IMMOBILIZER MODULE (SKIM) REMOVE/INSTALL

1 - IGNITION KEY CYLINDER
2 - STEERING COLUMN
3 - SENTRY KEY IMMOBILIZER MODULE (SKIM)
4 - SKIM CONNECTOR
5 - SKIM ANTENNA

INSTALLATION

NOTE: If the SKIM is replaced with a new unit, a DRB III® scan tool MUST be used to initialize the new SKIM and to program at least two Sentry Key transponders (Refer to 8 - ELECTRICAL/ELECTRONIC CONTROL MODULES/SENTRY KEY IMMOBILIZER MODULE - STANDARD PROCEDURE).

(1) Place the SKIM into position.

(2) Rotate the SKIM and its mounting bracket downwards and then to the side towards the steering column (Fig. 25).

(3) Install the two screws securing the SKIM to the top of the steering column (Fig. 25).

(4) Engage the steering column wire harness to the Sentry Key Immobilizer Module (SKIM) (Fig. 25).

(5) Install the steering column upper and lower shrouds. Refer to Steering, Column, Column Shroud, Installation.

(6) Install the Lower Instrument Panel Cover. Refer to Body, Instrument Panel, Lower Instrument Panel Cover, Installation.

(7) Connect the battery negative cable.

TRANSMISSION CONTROL MODULE

DESCRIPTION

The Transmission Control Module (TCM) is located behind the left fender and is fastened to the left frame rail forward of the suspension (Fig. 26). It mounts on a bracket that is fastened to the rail.

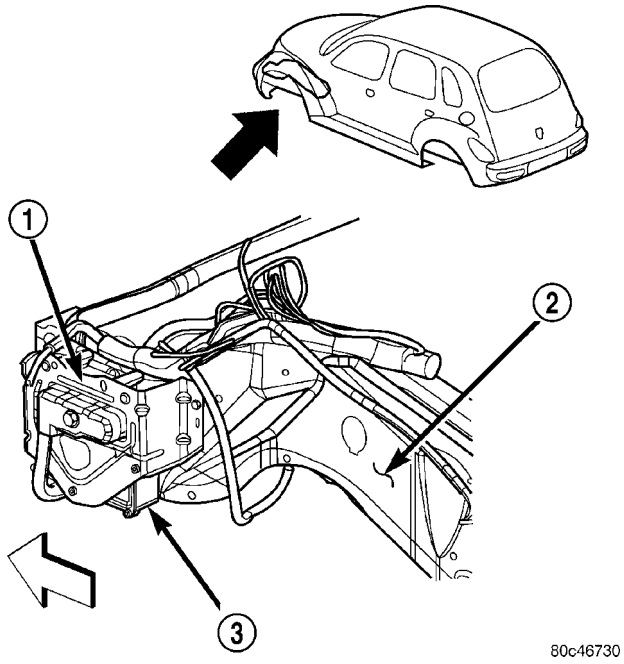

Fig. 26 Transmission Control Module (TCM) Location

1 - BRACKET
2 - LEFT RAIL
3 - TRANSMISSION CONTROL MODULE (TCM)

OPERATION

The TCM is the controlling unit for all electronic operations of the transaxle. The TCM receives information regarding vehicle operation from both direct and indirect inputs, and selects the operational mode of the transaxle. Direct inputs are hardwired to, and used specifically by the TCM. Indirect inputs originate from other components/modules, and are shared with the TCM via the J1850 communication bus.

Some examples of **direct inputs** to the TCM are:

- Battery (B+) voltage
- Ignition “ON” voltage
- Transmission Control Relay (Switched B+)
- Throttle Position Sensor
- Crankshaft Position Sensor (CKP)
- Transmission Range Sensor (TRS)
- Pressure Switches (L/R, 2/4, OD)
- Transmission Temperature Sensor (Integral to TRS)
- Input Shaft Speed Sensor

TRANSMISSION CONTROL MODULE (Continued)

- Output Shaft Speed Sensor

Some examples of **indirect inputs** to the TCM are:

- Engine/Body Identification
- Manifold Pressure
- Target Idle
- Torque Reduction Confirmation
- Speed Control ON/OFF Switch
- Engine Coolant Temperature
- Ambient/Battery Temperature
- Brake Switch Status
- DRB Communication

Based on the information received from these various inputs, the TCM determines the appropriate shift schedule and shift points, depending on the present operating conditions and driver demand. This is possible through the control of various direct and indirect outputs.

Some examples of TCM **direct outputs** are:

- Transmission Control Relay
- Solenoids (LR/CC, 2/4, OD and UD)
- Vehicle Speed (to PCM)
- Torque Reduction Request (to PCM)

An example of a TCM **indirect output** is:

- Transmission Temperature (to PCM)

In addition to monitoring inputs and controlling outputs, the TCM has other important responsibilities and functions:

- Storing and maintaining Clutch Volume Indices (CVI)
- Storing and selecting appropriate Shift Schedules
- System self-diagnostics
- Diagnostic capabilities (with DRB scan tool)

CLUTCH VOLUME INDEX (CVI)

An important function of the TCM is to monitor Clutch Volume Index (CVI). CVIs represent the volume of fluid needed to compress a clutch pack.

The TCM monitors gear ratio changes by monitoring the Input and Output Speed Sensors. The Input, or Turbine Speed Sensor sends an electrical signal to the TCM that represents input shaft rpm. The Output Speed Sensor provides the TCM with output shaft speed information.

By comparing the two inputs, the TCM can determine transaxle gear ratio. This is important to the CVI calculation because the TCM determines CVIs by monitoring how long it takes for a gear change to occur (Fig. 27).

Gear ratios can be determined by using the DRB Scan Tool and reading the Input/Output Speed Sensor values in the “Monitors” display. Gear ratio can be obtained by dividing the Input Speed Sensor value by the Output Speed Sensor value.

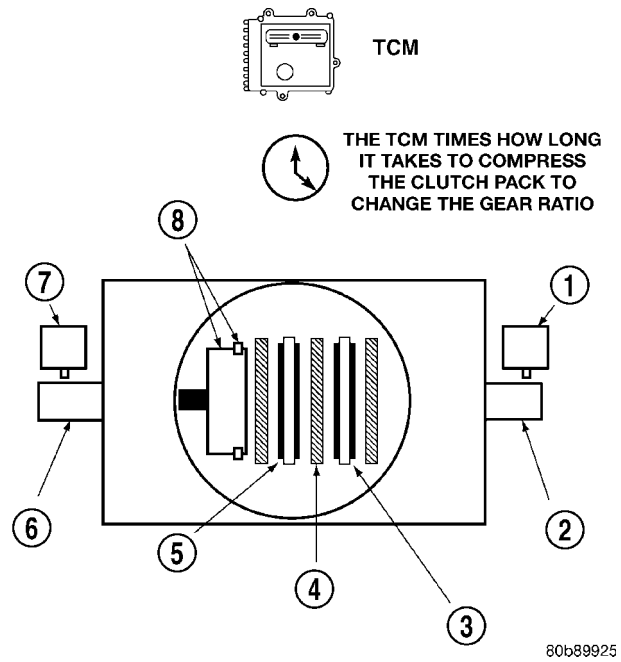

Fig. 27 Example of CVI Calculation

1 - OUTPUT SPEED SENSOR
2 - OUTPUT SHAFT
3 - CLUTCH PACK
4 - SEPARATOR PLATE
5 - FRICTION DISCS
6 - INPUT SHAFT
7 - INPUT SPEED SENSOR
8 - PISTON AND SEAL

For example, if the input shaft is rotating at 1000 rpm and the output shaft is rotating at 500 rpm, then the TCM can determine that the gear ratio is 2:1. In direct drive (3rd gear), the gear ratio changes to 1:1. The gear ratio changes as clutches are applied and released. By monitoring the length of time it takes for the gear ratio to change following a shift request, the TCM can determine the volume of fluid used to apply or release a friction element.

The volume of transmission fluid needed to apply the friction elements are continuously updated for adaptive controls. As friction material wears, the volume of fluid need to apply the element increases.

Certain mechanical problems within the clutch assemblies (broken return springs, out of position snap rings, excessive clutch pack clearance, improper assembly, etc.) can cause inadequate or out-of-range clutch volumes. Also, defective Input/Output Speed Sensors and wiring can cause these conditions. The following chart identifies the appropriate clutch volumes and when they are monitored/updated:

TRANSMISSION CONTROL MODULE (Continued)

CLUTCH VOLUMES				
Clutch	When Updated			Proper Clutch Volume
	Shift Sequence	Oil Temperature	Throttle Angle	
L/R	2-1 or 3-1 coast downshift	> 70°	< 5°	35 to 83
2/4	1-2 shift	> 110°	5 - 54°	20 to 77
OD	2-3 shift			48 to 150
UD	4-3 or 4-2 shift		> 5°	24 to 70

SHIFT SCHEDULES

As mentioned earlier, the TCM has programming that allows it to select a variety of shift schedules. Shift schedule selection is dependent on the following:

- Shift lever position
- Throttle position
- Engine load
- Fluid temperature
- Software level

As driving conditions change, the TCM appropriately adjusts the shift schedule. Refer to the following chart to determine the appropriate operation expected, depending on driving conditions.

Schedule	Condition	Expected Operation
Extreme Cold	Oil temperature at start-up below -16° F	Park, Reverse, Neutral and 2nd gear only (prevents shifting which may fail a clutch with frequent shifts)
Cold	Oil temperature at start-up above -12° F and below 36° F	– Delayed 2-3 upshift (approximately 22-31 mph) – Delayed 3-4 upshift (45-53 mph) – Early 4-3 costdown shift (approximately 30 mph) – Early 3-2 coastdown shift (approximately 17 mph) – High speed 4-2, 3-2, 2-1 kickdown shifts are prevented – No EMCC
Warm	Oil temperature at start-up above 36° F and below 80 degree F	– Normal operation (upshift, kickdowns, and coastdowns) – No EMCC
Hot	Oil temperature at start-up above 80° F	– Normal operation (upshift, kickdowns, and coastdowns) – Full EMCC, no PEMCC except to engage FEMCC (except at closed throttle at speeds above 70-83 mph)
Overheat	Oil temperature above 240° F or engine coolant temperature above 244° F	– Delayed 2-3 upshift (25-32 mph) – Delayed 3-4 upshift (41-48 mph) – 3rd gear FEMCC from 30-48 mph – 3rd gear PEMCC from 27-31 mph

TRANSMISSION CONTROL MODULE (Continued)

Schedule	Condition	Expected Operation
Super Overheat	Oil temperature above 260° F	– All ″Overheat″ shift schedule features apply – 2nd gear PEMCC above 22 mph – Above 22 mph the torque converter will not unlock unless the throttle is closed or if a wide open throttle 2nd PEMCC to 1 kickdown is made

REMOVAL

NOTE: If the transmission control module (TCM) is being replaced with a new or replacement unit, the Pinion Factor and Quick Learn procedures must be performed. (Refer to 8 - ELECTRICAL/ELECTRONIC CONTROL MODULES/TRANSMISSION CONTROL MODULE/STANDARD PROCEDURE/PINION FACTOR PROCEDURE)(Refer to 8 - ELECTRICAL/ELECTRONIC CONTROL MODULES/STANDARD PROCEDURE/QUICK LEARN PROCEDURE)

(1) Disconnect battery negative cable.
(2) Raise vehicle on hoist.
(3) Remove left front wheel/tire assembly (Fig. 28).

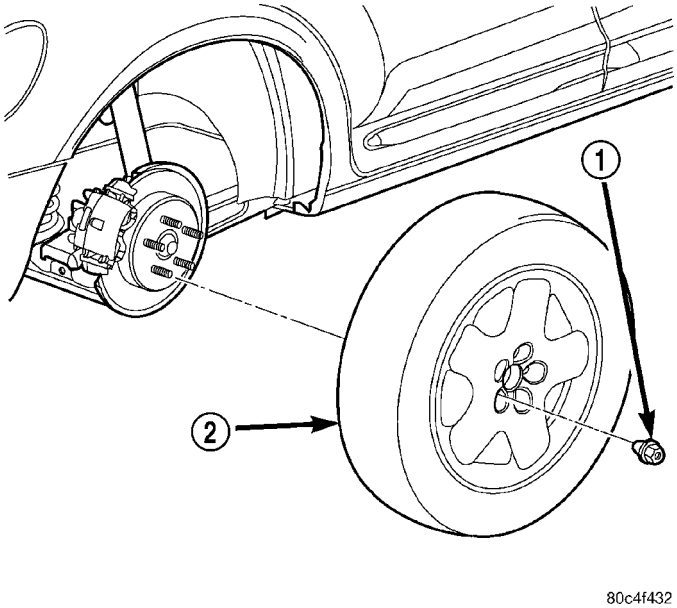

Fig. 28 Wheel/Tire Removal/Installation

1 - LUG NUT
2 - WHEEL/TIRE

(4) Remove wheel house splash shield.
(5) Remove TCM 60-way connector.
(6) Remove three TCM bracket-to-body mounting screws (Fig. 29).
(7) Remove TCM from bracket (Fig. 29).

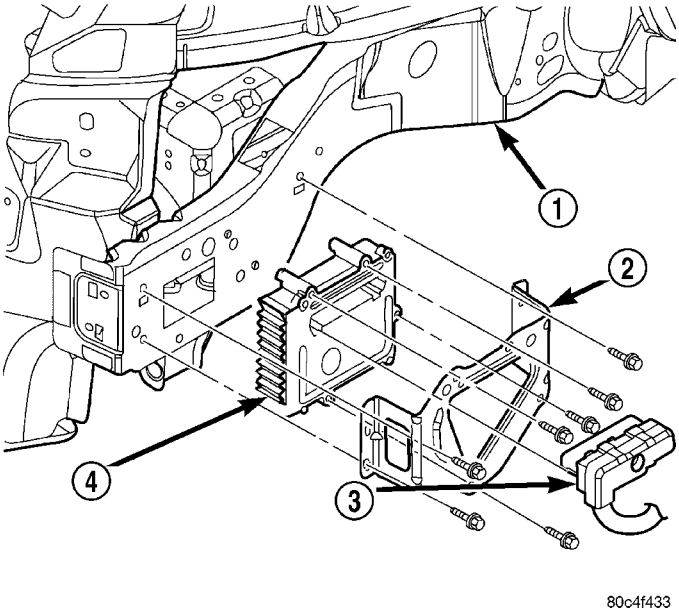

Fig. 29 TCM Removal/Installation

1 - LEFT RAIL
2 - BRACKET
3 - 60-WAY HARNESS CONNECTOR
4 - TRANSMISSION CONTROL MODULE (TCM)

INSTALLATION

NOTE: If the transmission control module (TCM) is being replaced with a new or replacement unit, the Pinion Factor and Quick Learn procedures must be performed. (Refer to 8 - ELECTRICAL/ELECTRONIC CONTROL MODULES/TRANSMISSION CONTROL MODULE/STANDARD PROCEDURE/PINION FACTOR PROCEDURE)(Refer to 8 - ELECTRICAL/ELECTRONIC CONTROL MODULES/STANDARD PROCEDURE/QUICK LEARN PROCEDURE)

(1) Install TCM to mounting bracket and tighten four screws to 11 N·m (100 in. lbs.).
(2) Install TCM/bracket assembly and fasten with three mounting screws (Fig. 29). Torque screws to 11 N·m (100 in. lbs.) torque.

TRANSMISSION CONTROL MODULE (Continued)

CAUTION: TCM 60-way connector must be torqued within 30-40 in. lbs. Improper torque may result in connector damage, or connector sealing problems.

(3) Connect the TCM 60-way connector and torque to 4 N·m (35 in. lbs.).

(4) Install wheel house splash shield.

(5) Install left front wheel/tire assembly (Fig. 28). Torque lug nuts to 135 N·m (100 ft. lbs.) torque.

(6) Lower vehicle.

(7) Connect the battery negative cable.

ENGINE SYSTEMS

TABLE OF CONTENTS

page

BATTERY SYSTEM 1
CHARGING 23
STARTING 34

BATTERY SYSTEM

TABLE OF CONTENTS

page

BATTERY SYSTEM
DESCRIPTION 2
OPERATION 2
DIAGNOSIS AND TESTING - BATTERY SYSTEM 2
CLEANING 4
INSPECTION 6
SPECIFICATIONS
SPECIFICATIONS 6
TORQUE SPECIFICATIONS 7
SPECIAL TOOLS
BATTERY SYSTEM SPECIAL TOOLS 7
BATTERY
DESCRIPTION 7
OPERATION 7
DIAGNOSIS AND TESTING - BATTERY 8
STANDARD PROCEDURE
STANDARD PROCEDURE - SPIRAL PLATE BATTERY CHARGING 8
STANDARD PROCEDURE - CONVENTIONAL BATTERY CHARGING 10
STANDARD PROCEDURE - USING MICRO 420 BATTERY TESTER 11
STANDARD PROCEDURE - OPEN-CIRCUIT VOLTAGE TEST 12
STANDARD PROCEDURE - IGNITION-OFF DRAW TEST 13
REMOVAL
REMOVAL - GASOLINE ENGINE 14
REMOVAL - DIESEL ENGINE 14
INSTALLATION
INSTALLATION - GASOLINE ENGINE 16
INSTALLATION - DIESEL ENGINE 16
BATTERY HOLDDOWN
DESCRIPTION 17
OPERATION 17
REMOVAL 17
INSTALLATION 17
BATTERY CABLES
DESCRIPTION 18
OPERATION 18
DIAGNOSIS AND TESTING - BATTERY CABLES 18
REMOVAL 19
INSTALLATION 20
BATTERY TRAY
DESCRIPTION 20
OPERATION 20
REMOVAL
REMOVAL - GASOLINE ENGINE 20
REMOVAL - DIESEL ENGINE 20
INSTALLATION
INSTALLATION - GASOLINE ENGINE 20
INSTALLATION - DIESEL ENGINE 20
THERMAL GUARD
DESCRIPTION 21
OPERATION 21
REMOVAL 21
INSTALLATION 21
BATTERY TRAY SUPPORT BRACKET
REMOVAL 22
INSTALLATION 22

BATTERY SYSTEM

DESCRIPTION

A single 12-volt battery is standard factory-installed equipment on this model. All of the components of the battery system are located within the engine compartment of the vehicle, except on vehicles equipped with a diesel engine. Vehicles equipped with a diesel engine have the battery mounted under the passenger front seat. The battery system for this vehicle covers the following related components, which are covered in further detail later in this section of the service manual:

- **Battery** - The storage battery provides a reliable means of storing a renewable source of electrical energy within the vehicle.
- **Battery Cables** - The battery cables connect the positive and negative charged battery terminal posts to the vehicle electrical system.
- **Battery Holddown** - The battery holddown hardware secures the battery in the battery tray.
- **Battery Thermal Guard** - The battery thermal guard insulates the battery to protect it from engine compartment temperature extremes.
- **Battery Tray** - The battery tray provides a secure mounting location in the vehicle for the battery and an anchor point for the battery holddown hardware (some models) and battery temperature sensor (if equipped).
- **Battery Tray Support Bracket** - The battery tray support bracket provides a secure mounting location in the vehicle for the battery and an anchor point for the battery holddown hardware (some models).

For battery system maintenance schedules and jump starting procedures, see the owner's manual in the vehicle glove box. Optionally, refer to the Lubrication and Maintenance section of this manual for the recommended battery maintenance schedules and for the proper battery jump starting procedure. While battery charging can be considered a maintenance procedure, the battery charging procedure and related information are located later in this section of this service manual. This was done because the battery must be fully-charged before any battery system diagnosis or testing procedures can be performed.

OPERATION

The battery system is designed to provide a safe, efficient, reliable and mobile means of delivering and storing electrical energy. This electrical energy is required to operate the engine starting system, as well as to operate many of the other vehicle accessory systems for limited durations while the engine and/or the charging system are not operating. The battery system is also designed to provide a reserve of electrical energy to supplement the charging system for short durations while the engine is running and the electrical current demands of the vehicle that exceed the output of the charging system. In addition to delivering, and storing electrical energy for the vehicle, the battery system serves as a capacitor and voltage stabilizer for the vehicle electrical system. It absorbs most abnormal or transient voltages caused by the switching of any of the electrical components or circuits in the vehicle.

DIAGNOSIS AND TESTING - BATTERY SYSTEM

The battery, starting, and charging systems in the vehicle operate with one another and must be tested as a complete system. In order for the engine to start and the battery to maintain its charge properly, all of the components that are used in these systems must perform within specifications. It is important that the battery, starting, and charging systems be thoroughly tested and inspected any time a battery needs to be charged or replaced. The cause of abnormal battery discharge, overcharging or early battery failure must be diagnosed and corrected before a battery is replaced and before a vehicle is returned to service. The service information for these systems has been separated within this service manual to make it easier to locate the specific information you are seeking. However, when attempting to diagnose any of these systems, it is important that you keep their interdependency in mind.

The diagnostic procedures used for the battery, starting, and charging systems include the most basic conventional diagnostic methods, to the more sophisticated On-Board Diagnostics (OBD) built into the Powertrain Control Module (PCM). Use of an induction-type milliampere ammeter, a volt/ohmmeter, a battery charger, a carbon pile rheostat (load tester) and a 12-volt test lamp may be required. All OBD-sensed systems are monitored by the PCM. Each monitored circuit is assigned a Diagnostic Trouble Code (DTC). The PCM will store a DTC in electronic memory for any failure it detects. Refer to Charging System for the proper charging system on-board diagnostic test procedures.

MICRO 420 BATTERY TESTER

The Micro 420 automotive battery system tester is designed to help the dealership technicians diagnose the cause of a defective battery. Follow the instruction manual supplied with the tester to properly diagnose a vehicle. If the instruction manual is not available refer to the standard procedure in this section, which includes the directions for using the Micro 420 battery tester.

BATTERY SYSTEM (Continued)

BATTERY SYSTEM DIAGNOSIS		
CONDITION	POSSIBLE CAUSES	CORRECTION
THE BATTERY SEEMS WEAK OR DEAD WHEN ATTEMPTING TO START THE ENGINE.	1. The electrical system ignition-off draw is excessive.	1. Refer to the IGNITION-OFF DRAW TEST Standard Procedure for the proper test procedures. Repair the excessive ignition-off draw, as required.
	2. The charging system is faulty.	2. Determine if the charging system is performing to specifications. Refer to Charging System for additional charging system diagnosis and testing procedures. Repair the faulty charging system, as required.
	3. The battery is discharged.	3. Determine the battery state-of-charge using the Micro 420 battery tester. Refer to the Standard Procedures in this section for additional test procedures. Charge the faulty battery, as required.
	4. The battery terminal connections are loose or corroded.	4. Refer to Battery Cables for the proper battery cable diagnosis and testing procedures. Clean and tighten the battery terminal connections, as required.
	5. The battery has an incorrect size or rating for this vehicle.	5. Refer to Battery System Specifications for the proper size and rating. Replace an incorrect battery, as required.
	6. The battery is faulty.	6. Test the battery using the Micro 420 battery tester. Refer to the Standard Procedures in this section for additional test procedures. Replace the faulty battery, as required.
	7. The starting system is faulty.	7. Determine if the starting system is performing to specifications. Refer to Starting System for the proper starting system diagnosis and testing procedures. Repair the faulty starting system, as required.
	8. The battery is physically damaged.	8. Inspect the battery for loose terminal posts or a cracked and leaking case. Replace the damaged battery, as required.

BATTERY SYSTEM (Continued)

BATTERY SYSTEM DIAGNOSIS		
CONDITION	POSSIBLE CAUSES	CORRECTION
THE BATTERY STATE OF CHARGE CANNOT BE MAINTAINED.	1. The battery has an incorrect size or rating for this vehicle.	1. Refer to Battery System Specifications for the proper specifications. Replace an incorrect battery, as required.
	2. The battery terminal connections are loose or corroded.	2. Refer to Battery Cable for the proper cable diagnosis and testing procedures. Clean and tighten the battery terminal connections, as required.
	3. The electrical system ignition-off draw is excessive.	3. Refer to the IGNITION-OFF DRAW TEST Standard Procedure for the proper test procedures. Repair the faulty electrical system, as required.
	4. The battery is faulty.	4. Test the battery using the Micro 420 battery tester. Refer to Standard Procedures for additional test procedures. Replace the faulty battery, as required.
	5. The starting system is faulty.	5. Determine if the starting system is performing to specifications. Refer to Starting System for the proper starting system diagnosis and testing procedures. Repair the faulty starting system, as required.
	6. The charging system is faulty.	6. Determine if the charging system is performing to specifications. Refer to Charging System for charging system diagnosis and testing procedures. Repair the faulty charging system, as required.
	7. Electrical loads exceed the output of the charging system.	7. Inspect the vehicle for aftermarket electrical equipment which might cause excessive electrical loads.
	8. Slow driving or prolonged idling with high-amperage draw loads in use.	8. Advise the vehicle operator, as required.
THE BATTERY WILL NOT ACCEPT A CHARGE.	1. The battery is faulty.	1. Test the battery using the Micro 420 battery tester.. Charge or replace the faulty battery, as required.

ABNORMAL BATTERY DISCHARGING

Any of the following conditions can result in abnormal battery discharging:

1. A faulty or incorrect charging system component. Refer to Charging System for additional charging system diagnosis and testing procedures.
2. A faulty or incorrect battery. Use Micro 420 tester and refer to Battery System for additional battery diagnosis and testing procedures.
3. A faulty circuit or component causing excessive ignition-off draw.
4. Electrical loads that exceed the output of the charging system. This can be due to equipment installed after manufacture, or repeated short trip use.
5. A faulty or incorrect starting system component. Refer to Starting System for the proper starting system diagnosis and testing procedures.
6. Corroded or loose battery posts and/or terminal clamps.
7. Slow driving speeds (heavy traffic conditions) or prolonged idling, with high-amperage draw loads in use.

CLEANING

The following information details the recommended cleaning procedures for the battery and related com-

BATTERY SYSTEM (Continued)

ponents. In addition to the maintenance schedules found in this service manual and the owner's manual, it is recommended that these procedures be performed any time the battery or related components must be removed for vehicle service.

(1) Clean the battery cable terminal clamps of all corrosion. Remove any corrosion using a wire brush or a post and terminal cleaning tool, and a sodium bicarbonate (baking soda) and warm water cleaning solution (Fig. 1).

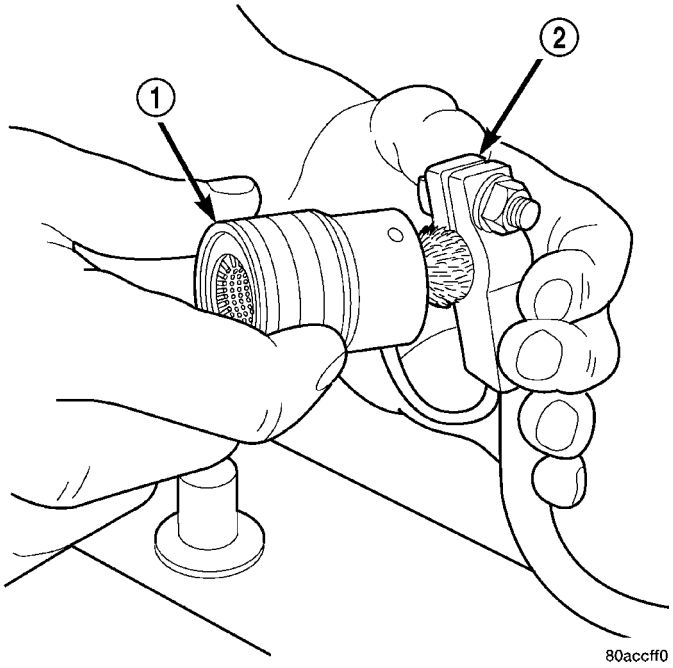

Fig. 1 Clean Battery Cable Terminal Clamp - Typical

1 - TERMINAL BRUSH
2 - BATTERY CABLE

(2) Clean the battery tray and battery holddown hardware of all corrosion. Remove any corrosion using a wire brush and a sodium bicarbonate (baking soda) and warm water cleaning solution. Paint any exposed bare metal.

(3) If the removed battery is to be reinstalled, clean the outside of the battery case and the top cover with a sodium bicarbonate (baking soda) and warm water cleaning solution using a stiff bristle parts cleaning brush to remove any acid film (Fig. 2). Rinse the battery with clean water. Ensure that the cleaning solution does not enter the battery cells through the vent holes. If the battery is being replaced, refer to Battery System Specifications for the factory-installed battery specifications. Confirm that the replacement battery is the correct size and has the correct ratings for the vehicle.

(4) Clean the battery thermal guard with a sodium bicarbonate (baking soda) and warm water cleaning solution using a stiff bristle parts cleaning brush to remove any acid film.

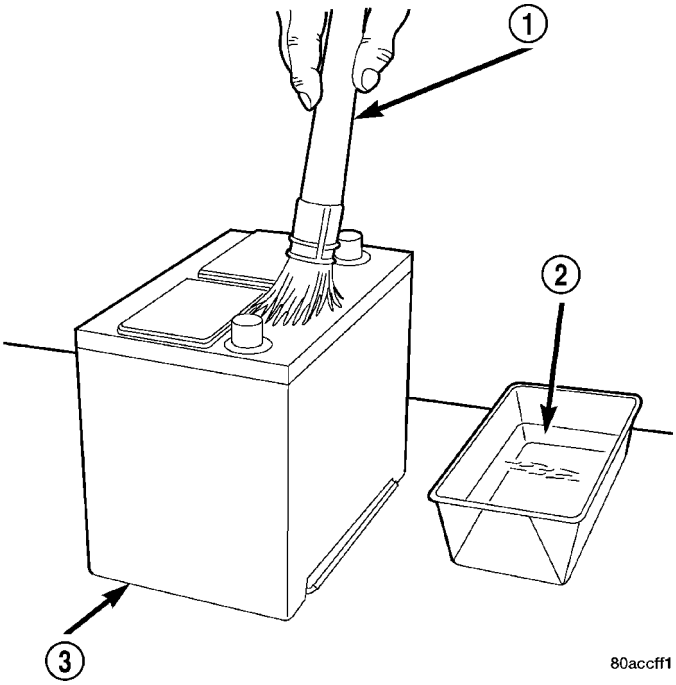

Fig. 2 Clean Battery - Typical

1 - CLEANING BRUSH
2 - WARM WATER AND BAKING SODA SOLUTION
3 - BATTERY

(5) Clean any corrosion from the battery terminal posts with a wire brush or a post and terminal cleaner, and a sodium bicarbonate (baking soda) and warm water cleaning solution (Fig. 3).

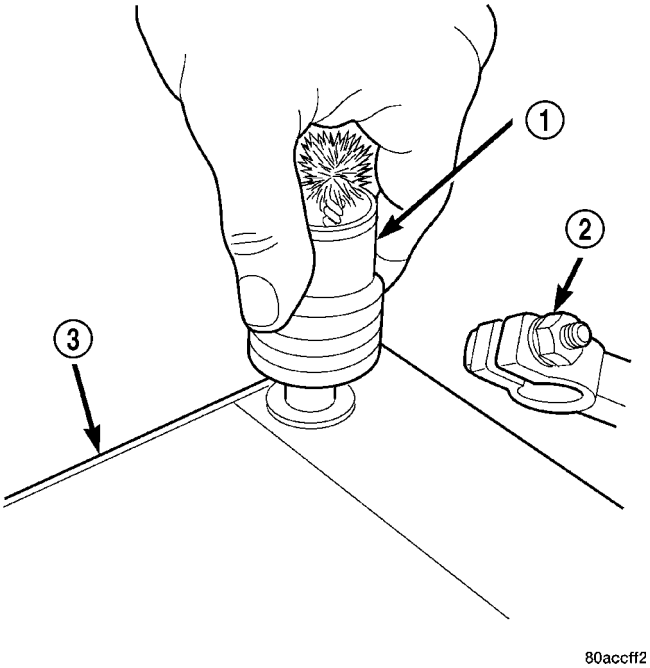

Fig. 3 Clean Battery Terminal Post - Typical

1 - TERMINAL BRUSH
2 - BATTERY CABLE
3 - BATTERY

BATTERY SYSTEM (Continued)

INSPECTION

The following information details the recommended inspection procedures for the battery and related components. In addition to the maintenance schedules found in this service manual and the owner's manual, it is recommended that these procedures be performed any time the battery or related components must be removed for vehicle service.

(1) Inspect the battery cable terminal clamps for damage. Replace any battery cable that has a damaged or deformed terminal clamp.

(2) Inspect the battery tray and battery holddown hardware for damage. Replace any damaged parts.

(3) Slide the thermal guard off of the battery case (if equipped). Inspect the battery case for cracks or other damage that could result in electrolyte leaks. Also, check the battery terminal posts for looseness. Batteries with damaged cases or loose terminal posts must be replaced.

(4) Inspect the battery thermal guard for tears, cracks, deformation or other damage (if equipped). Replace any battery thermal guard that has been damaged.

(5) Inspect the battery built-in test indicator sight glass (if equipped) for an indication of the battery condition. If the battery is discharged, charge as required. Refer to Standard Procedures for detailed instructions.

SPECIFICATIONS

SPECIFICATIONS

The battery Group Size number, the Cold Cranking Amperage (CCA) rating, and the Reserve Capacity (RC) rating or Ampere-Hours (AH) rating can be found on the original equipment battery label. Be certain that a replacement battery has the correct Group Size number, as well as CCA, and RC or AH ratings that equal or exceed the original equipment specification for the vehicle being serviced. Battery sizes and ratings are discussed in more detail below.

NOTE: Vehicles equipped with a diesel engine utilize a unique battery. The specifications for this battery may differ from the standards shown here. Refer to the battery manufacturer for detailed specifications.

- **Group Size** - The outside dimensions and terminal placement of the battery conform to standards established by the Battery Council International (BCI). Each battery is assigned a BCI Group Size number to help identify a correctly-sized replacement.
- **Cold Cranking Amperage** - The Cold Cranking Amperage (CCA) rating specifies how much current (in amperes) the battery can deliver for thirty seconds at -18° C (0° F). Terminal voltage must not fall below 7.2 volts during or after the thirty second discharge period. The CCA required is generally higher as engine displacement increases, depending also upon the starter current draw requirements.
- **Reserve Capacity** - The Reserve Capacity (RC) rating specifies the time (in minutes) it takes for battery terminal voltage to fall below 10.5 volts, at a discharge rate of 25 amperes. RC is determined with the battery fully-charged at 26.7° C (80° F). This rating estimates how long the battery might last after a charging system failure, under minimum electrical load.
- **Ampere-Hours** - The Ampere-Hours (AH) rating specifies the current (in amperes) that a battery can deliver steadily for twenty hours, with the voltage in the battery not falling below 10.5 volts. This rating is also sometimes identified as the twenty-hour discharge rating.

BATTERY CLASSIFICATIONS & RATINGS

Vehicle	Part Number	BCI Group Size Classification	Cold Cranking Amperage	Reserve Capacity	Ampere - Hours	Load Test Amperage
PT 2.0/2.4L	04671579AB	26R	510	92 Minutes	50	255
PG 2.2L Diesel	04868999AA	34	700	95 Minutes	48	350
PG 2.0L	05033315AA	45	510	80 Minutes	55	255
PG 1.6L	05033211AA	44	510	80 Minutes	50	255

BATTERY SYSTEM (Continued)

TORQUE SPECIFICATIONS

DESCRIPTION	TORQUE
Battery Hold Down Bolt	110 ± 20 in. lbs.
Battery Cables	110 ± 20 in. lbs.

SPECIAL TOOLS

BATTERY SYSTEM SPECIAL TOOLS

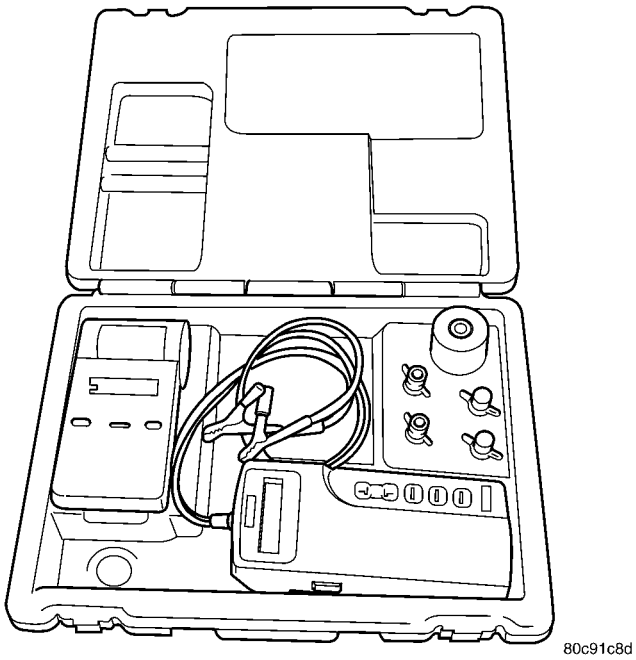

MICRO 420 BATTERY TESTER

BATTERY

DESCRIPTION

There are two different batteries available on this model. Vehicles equipped with a diesel engine utilize a spiral wound plate designed battery with recombination technology. This is a maintenance-free battery that is capable of delivering more power than a conventional battery. This additional power is required by a diesel engine during cold cranking. Vehicles equipped with a gasoline engine utilize a conventional battery. Refer to the following information for detailed differences and descriptions of these two batteries.

SPIRAL PLATE BATTERY - DIESEL ENGINE

Spiral plate technology takes the elements of traditional batteries - lead and sulfuric acid - to the next level. By tightly winding layers of spiral grids and acid-permeated vitreous separators into cells, the manufacturer has developed a battery with more power and service life than conventional batteries the same size. The spiral plate battery is completely, permanently sealed. Through gas recombination, hydrogen and oxygen within the battery are captured during normal charging and reunited to form the water within the electrolyte, eliminating the need to add distilled water. Therefore, these batteries have non-removable battery vent caps. Water **cannot** be added to this battery.

The acid inside an spiral plate battery is bound within the vitreous separators, ending the threat of acid leaks. This feature allows the battery to be installed in any position anywhere in the vehicle.

Spiral plate technology is the process by which the plates holding the active material in the battery are wound tightly in coils instead of hanging flat, like conventional batteries. This design has a lower internal resistance and also increases the active material surface area.

WARNING: NEVER EXCEED 14.4 VOLTS WHEN CHARGING A SPIRAL PLATE BATTERY. PERSONAL INJURY AND/OR BATTERY DAMAGE MAY RESULT.

Due to the maintanance-free design, distilled water cannot be added to this battery. Therefore, if more than 14.4 volts are used during the spiral plate battery charging process, water vapor can be exhausted through the pressure-sensitive battery vents and lost for good. This can permanently damage the spiral plate battery. Never exceed 14.4 volts when charging a spiral plate battery. Personal injury and/or battery damage may result.

CONVENTIONAL BATTERY - GASOLINE ENGINE

Low-maintenance conventional batteries are used on vehicles equipped with a gasoline engine, these batteries have non-removable battery cell caps. Under normal service, the composition of this battery reduces gassing and water loss at normal charge rates.

Conventional batteries are made up of six individual cells that are connected in series. Each cell contains positive charged plate groups made of lead oxide, and negatively charged plate groups made of sponge lead. The plates are submerged in a sulfuric acid and water solution called electrolyte.

Both batteries are used to store electrical energy potential in a chemical form. When an electrical load is applied to the battery terminals, an electrochemical reaction occurs within the battery. This reaction causes the battery to discharge electrical current.

OPERATION

The battery is designed to store electrical energy in a chemical form. When an electrical load is applied to the terminals of the battery, an electrochemical reac-

BATTERY (Continued)

tion occurs. This reaction causes the battery to discharge electrical current from its terminals. As the battery discharges, a gradual chemical change takes place within each cell. The chemical changes within the battery are caused by the movement of excess or free electrons between the positive and negative plate groups. This movement of electrons produces a flow of electrical current through the load device attached to the battery terminals.

The battery is vented to release excess hydrogen gas that is created when the battery is being charged or discharged. However, even with these vents, hydrogen gas can collect in or around the battery. If hydrogen gas is exposed to flame or sparks, it may ignite. If the battery is equipped with removable cell caps, add distilled water whenever the electrolyte level is below the top of the plates. If the battery cell caps cannot be removed, the battery must be replaced if the electrolyte level becomes low.

DIAGNOSIS AND TESTING - BATTERY

The battery must be completely charged and the terminals should be properly cleaned and inspected before diagnostic procedures are performed. Refer to Battery System Cleaning for the proper cleaning procedures, and Battery System Inspection for the proper battery inspection procedures. Refer to Standard Procedures for the proper battery charging procedures.

MICRO 420 BATTERY TESTER

The Micro 420 automotive battery tester is designed to help the dealership technicians diagnose the cause of a defective battery. Follow the instruction manual supplied with the tester to properly diagnose a vehicle. If the instruction manual is not available refer to the standard procedure in this section, which includes the directions for using the Micro 420 battery tester.

WARNING: IF THE BATTERY SHOWS SIGNS OF FREEZING, LEAKING OR LOOSE POSTS, DO NOT TEST, ASSIST-BOOST, OR CHARGE. THE BATTERY MAY ARC INTERNALLY AND EXPLODE. PERSONAL INJURY AND/OR VEHICLE DAMAGE MAY RESULT.

WARNING: EXPLOSIVE HYDROGEN GAS FORMS IN AND AROUND THE BATTERY. DO NOT SMOKE, USE FLAME, OR CREATE SPARKS NEAR THE BATTERY. PERSONAL INJURY AND/OR VEHICLE DAMAGE MAY RESULT.

WARNING: THE BATTERY CONTAINS SULFURIC ACID, WHICH IS POISONOUS AND CAUSTIC. AVOID CONTACT WITH THE SKIN, EYES, OR CLOTHING. IN THE EVENT OF CONTACT, FLUSH WITH WATER AND CALL A PHYSICIAN IMMEDIATELY. KEEP OUT OF THE REACH OF CHILDREN.

A battery that will not accept a charge is faulty, and must be replaced. Further testing is not required. A fully-charged battery must be tested to determine its cranking capacity. A battery that is fully-charged, but does not pass the Micro 420 or load test, is faulty and must be replaced.

NOTE: Completely discharged batteries may take several hours to accept a charge. Refer to Standard Procedures for the proper battery charging procedures.

STANDARD PROCEDURE

STANDARD PROCEDURE - SPIRAL PLATE BATTERY CHARGING

Vehicles equipped with a diesel engine utilize a unique spiral plate battery. This battery has a maximum charging voltage that must not be exceeded in order to restore the battery to its full potential, failure to use the following spiral plate battery charging procedure could result in damage to the battery or personal injury.

Battery charging is the means by which the battery can be restored to its full voltage potential. A battery is fully-charged when:

- Micro 420 battery tester indicates battery is OK.
- Open-circuit voltage of the battery is 12.65 volts or above.
- Battery passes Load Test multiple times.

WARNING: IF THE BATTERY SHOWS SIGNS OF FREEZING, LEAKING, LOOSE POSTS OR LOW ELECTROLYTE LEVEL, DO NOT TEST, ASSIST-BOOST, OR CHARGE. THE BATTERY MAY ARC INTERNALLY AND EXPLODE. PERSONAL INJURY AND/OR VEHICLE DAMAGE MAY RESULT.

CAUTION: Always disconnect and isolate the battery negative cable before charging a battery. Charge the battery directly at the battery terminals. Do not exceed 14.4 volts while charging a battery.

CAUTION: The battery should not be hot to the touch. If the battery feels hot to the touch, turn off the charger and let the battery cool before continuing the charging operation. Damage to the battery may result.

After the battery has been charged to 12.6 volts or greater, perform a load test to determine the battery

BATTERY (Continued)

cranking capacity. Refer to Battery Diagnosis and Testing for the proper battery test procedures. If the battery will endure a load test, return the battery to service. If the battery will not pass a load test, it is faulty and must be replaced.

Clean and inspect the battery hold downs, tray, terminals, posts, and top before completing battery service. Refer to Battery System Cleaning for the proper battery system cleaning procedures, and Battery System Inspection for the proper battery system inspection procedures.

CHARGING A COMPLETELY DISCHARGED BATTERY – SPIRAL PLATE BATTERY

The following procedure should be used to recharge a completely discharged battery. Unless this procedure is properly followed, a good battery may be needlessly replaced.

(1) Measure the voltage at the battery posts with a voltmeter, accurate to 1/10 (0.10) volt (Fig. 4). Refer to Battery Removal and Installation for access instructions. If the reading is below ten volts, the battery charging current will be low. It could take several hours before the battery accepts a current greater than a few milliamperes. Such low current may not be detectable on the ammeters built into many battery chargers.

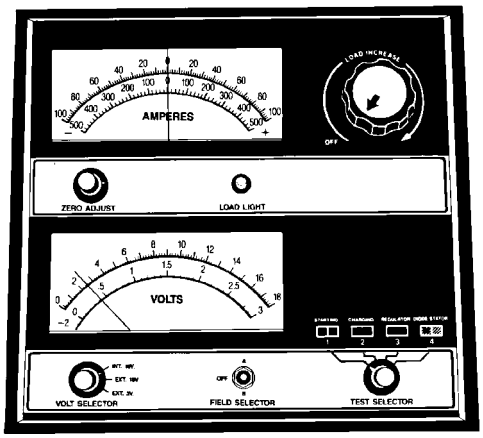

898A-12

Fig. 4 Voltmeter - Typical

(2) Disconnect and isolate the battery negative cable. Connect the battery charger leads. Some battery chargers are equipped with polarity-sensing circuitry. This circuitry protects the battery charger and the battery from being damaged if they are improperly connected. If the battery state-of-charge is too low for the polarity-sensing circuitry to detect, the battery charger will not operate. This makes it appear that the battery will not accept charging current. See the instructions provided by the manufacturer of the battery charger for details on how to bypass the polarity-sensing circuitry.

(3) Battery chargers vary in the amount of voltage and current they provide. The amount of time required for a battery to accept measurable charging current at various voltages is shown in the Charge Rate Table. If the charging current is still not measurable at the end of the charging time, the battery is faulty and must be replaced. If the charging current is measurable during the charging time, the battery may be good and the charging should be completed in the normal manner.

SPIRAL-PLATE BATTERY CHARGE RATE TABLE	
Voltage	Hours
14.4 volts maximum	up to 4 hours
13.0 to 14 volts	up to 8 hours
12.9 volts or less	up to 16 hours

CHARGING TIME REQUIRED

The time required to charge a battery will vary, depending upon the following factors:

- **Battery Capacity** - A completely discharged heavy-duty battery requires twice the charging time of a small capacity battery.
- **Temperature** - A longer time will be needed to charge a battery at -18° C (0° F) than at 27° C (80° F). When a fast battery charger is connected to a cold battery, the current accepted by the battery will be very low at first. As the battery warms, it will accept a higher charging current rate (amperage).
- **Charger Capacity** - A battery charger that supplies only five amperes will require a longer charging time. A battery charger that supplies eight amperes will require a shorter charging time.
- **State-Of-Charge** - A completely discharged battery requires more charging time than a partially discharged battery. Electrolyte is nearly pure water in a completely discharged battery. At first, the charging current (amperage) will be low. As the battery charges, the specific gravity of the electrolyte will gradually rise.

The Battery Charging Time Table gives an indication of the time required to charge a typical battery at room temperature based upon the battery state-of-charge and the charger capacity.

BATTERY (Continued)

SPIRAL-PLATE BATTERY CHARGING TIME TABLE		
Charging Amperage	5 Amps	8 Amps
Open Circuit Voltage	Hours Charging @ 21° C (70° F)	
12.25 to 12.49	6 hours	3 hours
12.00 to 12.24	10 hours	5 hours
10.00 to 11.99	14 hours	7 hours
Below 10.00	18 hours	9 hours

STANDARD PROCEDURE - CONVENTIONAL BATTERY CHARGING

Vehicles equipped with a diesel engine utilize a unique spiral plate battery. This battery has a maximum charging voltage that must be used in order to restore the battery to its full potential, failure to use the spiral plate battery charging procedure could result in damage to the battery or personal injury.

Battery charging is the means by which the battery can be restored to its full voltage potential. A battery is fully-charged when:

- Micro 420 battery tester indicates battery is OK.
- Open-circuit voltage of the battery is 12.64 volts or above.
- Battery passes Load Test multiple times.

WARNING: IF THE BATTERY SHOWS SIGNS OF FREEZING, LEAKING, LOOSE POSTS, DO NOT TEST, ASSIST-BOOST, OR CHARGE. THE BATTERY MAY ARC INTERNALLY AND EXPLODE. PERSONAL INJURY AND/OR VEHICLE DAMAGE MAY RESULT.

WARNING: EXPLOSIVE HYDROGEN GAS FORMS IN AND AROUND THE BATTERY. DO NOT SMOKE, USE FLAME, OR CREATE SPARKS NEAR THE BATTERY. PERSONAL INJURY AND/OR VEHICLE DAMAGE MAY RESULT.

WARNING: THE BATTERY CONTAINS SULFURIC ACID, WHICH IS POISONOUS AND CAUSTIC. AVOID CONTACT WITH THE SKIN, EYES, OR CLOTHING. IN THE EVENT OF CONTACT, FLUSH WITH WATER AND CALL A PHYSICIAN IMMEDIATELY. KEEP OUT OF THE REACH OF CHILDREN.

WARNING: IF THE BATTERY IS EQUIPPED WITH REMOVABLE CELL CAPS, BE CERTAIN THAT EACH OF THE CELL CAPS IS IN PLACE AND TIGHT BEFORE THE BATTERY IS RETURNED TO SERVICE. PERSONAL INJURY AND/OR VEHICLE DAMAGE MAY RESULT FROM LOOSE OR MISSING CELL CAPS.

CAUTION: Always disconnect and isolate the battery negative cable before charging a battery. Do not exceed sixteen volts while charging a battery. Damage to the vehicle electrical system components may result.

CAUTION: Battery electrolyte will bubble inside the battery case during normal battery charging. Electrolyte boiling or being discharged from the battery vents indicates a battery overcharging condition. Immediately reduce the charging rate or turn off the charger to evaluate the battery condition. Damage to the battery may result from overcharging.

CAUTION: The battery should not be hot to the touch. If the battery feels hot to the touch, turn off the charger and let the battery cool before continuing the charging operation. Damage to the battery may result.

After the battery has been charged to 12.4 volts or greater, retest the battery with the Micro 420 tester or perform a load test to determine the battery cranking capacity. Refer to Standard Procedures for the proper battery load test procedures. If the battery will pass a load test, return the battery to service. If the battery will not pass a load test, it is faulty and must be replaced.

Clean and inspect the battery hold downs, tray, terminals, posts, and top before completing battery service. Refer to Battery System Cleaning for the proper battery system cleaning procedures, and Battery System Inspection for the proper battery system inspection procedures.

CHARGING A COMPLETELY DISCHARGED CONVENTIONAL BATTERY

The following procedure should be used to recharge a completely discharged battery. Unless this procedure is properly followed, a good battery may be needlessly replaced.

(1) Measure the voltage at the battery posts with a voltmeter, accurate to 1/10 (0.10) volt (Fig. 5). If the reading is below ten volts, the battery charging current will be low. It could take some time before the battery accepts a current greater than a few milliamperes. Such low current may not be detectable on the ammeters built into many battery chargers.

(2) Disconnect and isolate the battery negative cable. Connect the battery charger leads. Some battery chargers are equipped with polarity-sensing circuitry. This circuitry protects the battery charger and

BATTERY (Continued)

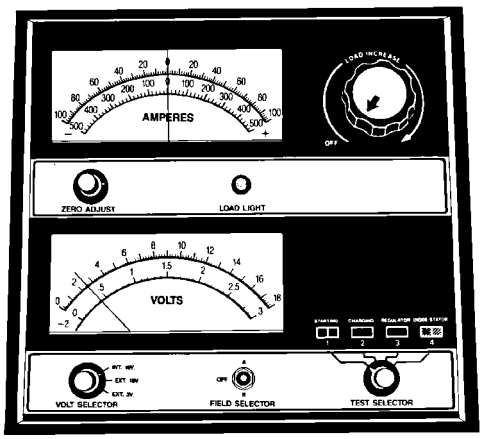

898A-12

Fig. 5 Voltmeter - Typical

the battery from being damaged if they are improperly connected. If the battery state-of-charge is too low for the polarity-sensing circuitry to detect, the battery charger will not operate. This makes it appear that the battery will not accept charging current. See the instructions provided by the manufacturer of the battery charger for details on how to bypass the polarity-sensing circuitry.

(3) Battery chargers vary in the amount of voltage and current they provide. The amount of time required for a battery to accept measurable charging current at various voltages is shown in the Charge Rate Table. If the charging current is still not measurable at the end of the charging time, the battery is faulty and must be replaced. If the charging current is measurable during the charging time, the battery may be good and the charging should be completed in the normal manner.

CONVENTIONAL BATTERY CHARGE RATE TABLE	
Voltage	Minutes
16.0 volts maximum	up to 10 min.
14.0 to 15.9 volts	up to 20 min.
13.9 volts or less	up to 30 min.

CHARGING TIME REQUIRED

The time required to charge a battery will vary, depending upon the following factors:

- **Battery Capacity** - A completely discharged heavy-duty battery requires twice the charging time of a small capacity battery.
- **Temperature** - A longer time will be needed to charge a battery at -18° C (0° F) than at 27° C (80° F). When a fast battery charger is connected to a cold battery, the current accepted by the battery will be very low at first. As the battery warms, it will accept a higher charging current rate (amperage).
- **Charger Capacity** - A battery charger that supplies only five amperes will require a longer charging time. A battery charger that supplies twenty amperes or more will require a shorter charging time.
- **State-Of-Charge** - A completely discharged battery requires more charging time than a partially discharged battery. Electrolyte is nearly pure water in a completely discharged battery. At first, the charging current (amperage) will be low. As the battery charges, the specific gravity of the electrolyte will gradually rise.

The Conventional Battery Charging Time Table gives an indication of the time required to charge a typical battery at room temperature based upon the battery state-of-charge and the charger capacity.

CONVENTIONAL BATTERY CHARGING TIME TABLE			
Charging Amperage	5 Amps	10 Amps	20 Amps
Open Circuit Voltage	Hours Charging @ 21° C (70° F)		
12.25 to 12.49	6 hours	3 hours	1.5 hours
12.00 to 12.24	10 hours	5 hours	2.5 hours
10.00 to 11.99	14 hours	7 hours	3.5 hours
Below 10.00	18 hours	9 hours	4.5 hours

STANDARD PROCEDURE - USING MICRO 420 BATTERY TESTER

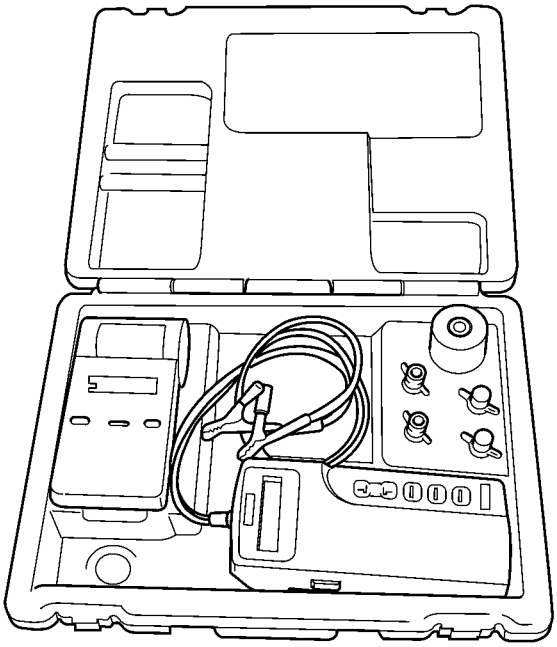

80c91c8d

Fig. 6 Micro 420 Battery Tester

BATTERY (Continued)

Always use the Micro 420 Instruction Manual that was supplied with the tester as a reference. If the Instruction Manual is not available the following procedure can be used:

WARNING: ALWAYS WEAR APPROPRIATE EYE PROTECTION AND USE EXTREME CAUTION WHEN WORKING WITH BATTERIES.

BATTERY TESTING

(1) If testing the battery OUT-OF-VEHICLE, clean the battery terminals with a wire brush before testing. If the battery is equipped with side post terminals, install and tighten the supplied lead terminal stud adapters. Do not use steel bolts. Failure to properly install the stud adapters, or using stud adapters that are dirty or worn-out may result in false test readings.

(2) If testing the battery IN-THE-VEHICLE, make certain all of the vehicle accessory loads are OFF, including the ignition. **The preferred test position is at the battery terminal**. If the battery is not accessible, you may test using both the positive and negative jumper posts. Select TESTING AT JUMPER POST when connecting to that location.

(3) Connect the tester (Fig. 6) to the battery or jumper posts, the red clamp to positive (+) and the black clamp to negative (–).

NOTE: Multiple batteries connected in parallel must have the ground cable disconnected to perform a battery test. Failure to disconnect may result in false battery test readings.

NOTE: When testing the battery in a PT Cruiser, always test at the battery terminals

(4) Using the ARROW key select **in** or **out** of vehicle testing and press ENTER to make a selection.

(5) If not selected, choose the Cold Cranking Amp (CCA) battery rating. Or select the appropriate battery rating for your area (see menu). The tester will then run its self programmed test of the battery and display the results. Refer to the test result table noted below.

CAUTION: If REPLACE BATTERY is the result of the test, this may mean a poor connection between the vehicle's cables and battery exists. After disconnecting the vehicle's battery cables from the battery, retest the battery using the OUT-OF-VEHICLE test before replacing.

(6) While viewing the battery test result, press the CODE button and the tester will prompt you for the last 4 digits of the VIN. Use the UP/DOWN arrow buttons to scroll to the correct character; then press ENTER to select and move to the next digit. Then press the ENTER button to view the SERVICE CODE. Pressing the CODE button a second time will return you to the test results.

BATTERY TEST RESULTS	
GOOD BATTERY	Return to service
GOOD - RECHARGE	Fully charge battery and return to service
CHARGE & RETEST	Fully charge battery and retest battery
REPLACE BATTERY	Replace the battery and retest complete system
BAD-CELL REPLACE	Replace the battery and retest complete system

NOTE: The SERVICE CODE is required on every warranty claim submitted for battery replacement.

STANDARD PROCEDURE - OPEN-CIRCUIT VOLTAGE TEST

A battery open-circuit voltage (no load) test will show the approximate state-of-charge of a battery.

Before proceeding with this test, completely charge the battery (Refer to 8 - ELECTRICAL/BATTERY SYSTEM/BATTERY - STANDARD PROCEDURE).

(1) Before measuring the open-circuit voltage, the surface charge must be removed from the battery. Turn on the headlamps for fifteen seconds, then allow up to five minutes for the battery voltage to stabilize.

(2) Disconnect and isolate both battery cables, negative cable first.

(3) Using a voltmeter connected to the battery posts (see the instructions provided by the manufacturer of the voltmeter), measure the open-circuit voltage (Fig. 7).

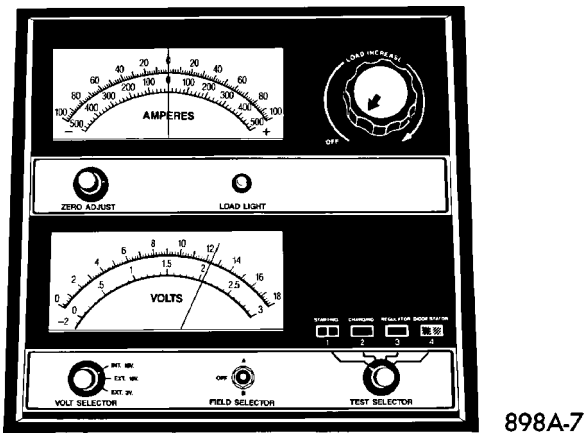

Fig. 7 Testing Open-Circuit Voltage - Typical

BATTERY (Continued)

See the Open-Circuit Voltage Table. This voltage reading will indicate the battery state-of-charge, but will not reveal its cranking capacity. If a battery has an open-circuit voltage reading of 12.4 volts or greater, it may be load tested to reveal its cranking capacity.

OPEN CIRCUIT VOLTAGE TABLE	
Open Circuit Voltage	Charge Percentage
11.7 volts or less	0%
12.0 volts	25%
12.2 volts	50%
12.4 volts	75%
12.6 volts or more	100%

STANDARD PROCEDURE - IGNITION-OFF DRAW TEST

The term Ignition-Off Draw (IOD) identifies a normal condition where power is being drained from the battery with the ignition switch in the Off position. A normal vehicle electrical system will draw from five to thirty-five milliamperes (0.005 to 0.035 ampere) with the ignition switch in the Off position, and all non-ignition controlled circuits in proper working order. Up to thirty-five milliamperes are needed to enable the memory functions for the Powertrain Control Module (PCM), digital clock, electronically tuned radio, and other modules which may vary with the vehicle equipment.

A vehicle that has not been operated for approximately twenty days, may discharge the battery to an inadequate level. When a vehicle will not be used for twenty days or more (stored), remove the IOD fuse from the Power Distribution Center (PDC). This will reduce battery discharging.

Excessive IOD can be caused by:

- Electrical items left on.
- Faulty or improperly adjusted switches.
- Faulty or shorted electronic modules and components.
- An internally shorted generator.
- Intermittent shorts in the wiring.

If the IOD is over thirty-five milliamperes, the problem must be found and corrected before replacing a battery. In most cases, the battery can be charged and returned to service after the excessive IOD condition has been corrected.

(1) Verify that all electrical accessories are off. Turn off all lamps, remove the ignition key, and close all doors. If the vehicle is equipped with an illuminated entry system or an electronically tuned radio, allow the electronic timer function of these systems to automatically shut off (time out). This may take up to three minutes.

(2) Determine that the underhood lamp is operating properly, then disconnect the lamp wire harness connector or remove the lamp bulb.

(3) Disconnect the battery negative cable.

(4) Set an electronic digital multi-meter to its highest amperage scale. Connect the multi-meter between the disconnected battery negative cable terminal clamp and the battery negative terminal post. Make sure that the doors remain closed so that the illuminated entry system is not activated. The multi-meter amperage reading may remain high for up to three minutes, or may not give any reading at all while set in the highest amperage scale, depending upon the electrical equipment in the vehicle. The multi-meter leads must be securely clamped to the battery negative cable terminal clamp and the battery negative terminal post. If continuity between the battery negative terminal post and the negative cable terminal clamp is lost during any part of the IOD test, the electronic timer function will be activated and all of the tests will have to be repeated.

(5) After about three minutes, the high-amperage IOD reading on the multi-meter should become very low or nonexistent, depending upon the electrical equipment in the vehicle. If the amperage reading remains high, remove and replace each fuse or circuit breaker in the Power Distribution Center (PDC) and then in the Junction Block (JB), one at a time until the amperage reading becomes very low, or nonexistent. Refer to the appropriate wiring information in this service manual for complete PDC and JB fuse, circuit breaker, and circuit identification. This will isolate each circuit and identify the circuit that is the source of the high-amperage IOD. If the amperage reading remains high after removing and replacing each fuse and circuit breaker, disconnect the wire harness from the generator. If the amperage reading now becomes very low or nonexistent, refer to Charging System for the proper charging system diagnosis and testing procedures. After the high-amperage IOD has been corrected, switch the multi-meter to progressively lower amperage scales and, if necessary, repeat the fuse and circuit breaker remove-and-replace process to identify and correct all sources of excessive IOD. It is now safe to select the lowest milliampere scale of the multi-meter to check the low-amperage IOD.

CAUTION: Do not open any doors, or turn on any electrical accessories with the lowest milliampere scale selected, or the multi-meter may be damaged.

(6) Observe the multi-meter reading. The low-amperage IOD should not exceed thirty-five milliamperes (0.035 ampere). If the current draw exceeds thirty-five milliamperes, isolate each circuit using the fuse and circuit breaker remove-and-replace process

BATTERY (Continued)

in Step 5. The multi-meter reading will drop to within the acceptable limit when the source of the excessive current draw is disconnected. Repair this circuit as required; whether a wiring short, incorrect switch adjustment, or a component failure is at fault.

REMOVAL

REMOVAL - GASOLINE ENGINE

WARNING:
TO PROTECT THE HANDS FROM BATTERY ACID, A SUITABLE PAIR OF HEAVY DUTY RUBBER GLOVES, NOT THE HOUSEHOLD TYPE, SHOULD BE WORN WHEN REMOVING OR SERVICING A BATTERY. SAFETY GLASSES ALSO SHOULD BE WORN.

(1) Make sure ignition switch is in OFF position and all accessories are OFF.
(2) Open hood.
(3) Remove the air cleaner housing(Refer to 9 - ENGINE/AIR INTAKE SYSTEM/AIR CLEANER HOUSING - REMOVAL).
(4) Disconnect and isolate the battery negative cable then the positive cable.
(5) Loosen bolt and retainer that holds the battery down to the tray (Fig. 8) or (Fig. 9).
(6) Lift battery out of battery tray and remove from vehicle.

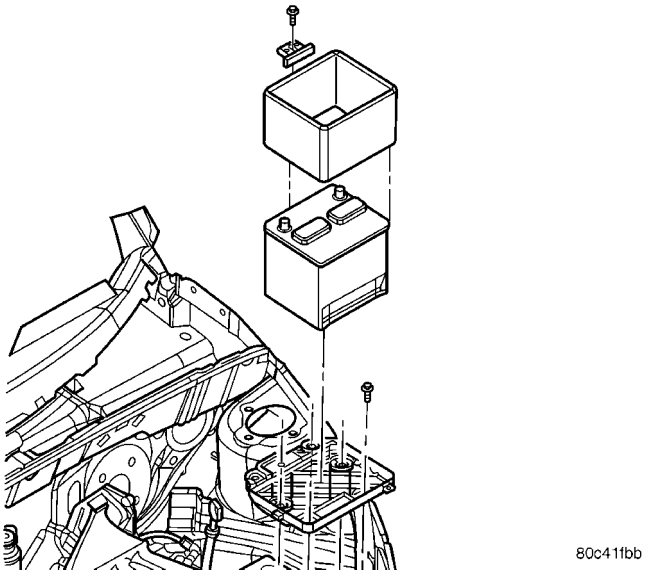

Fig. 8 Battery Remove/Install - Gasoline Engine Only

(7) Remove thermal guard (if equipped) from battery.

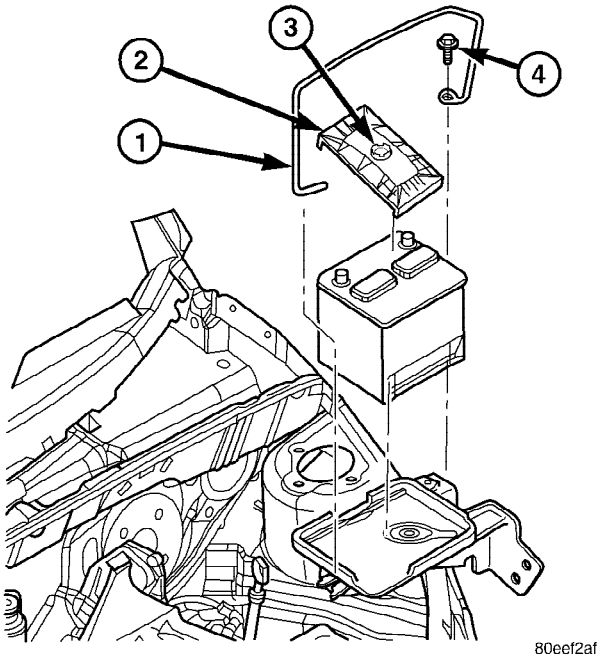

Fig. 9 Battery Remove/Install - Turbo Gasoline Engine Only

1 - HOLD DOWN ROD
2 - HOLD DOWN RETAINER
3 - NON CORROSIVE SPACERS FOR SERVICE BATTERY
4 - BOLT

REMOVAL - DIESEL ENGINE

(1) Make sure ignition switch is in OFF position and all accessories are OFF.
(2) Open the passenger door.
(3) Position passenger seat to the full rear location.
(4) Remove the two screws from the seat front trim panel.
(5) Lift trim panel to disengage the lower tabs from the lower mounting slots and set aside.
(6) Disconnect and isolate the battery negative cable.
(7) Disconnect the vent tube assembly by pulling the elbow straight forward from the battery vent port.
(8) Unclip the vent tubing assembly from the battery retaining strap. Note the position of the clip for installation reference.
(9) Loosen bolt and retainer that holds the battery down to the tray and slide battery forward enough to access the battery temperature sensor (Fig. 10). Remove the battery temperature sensor from the battery case (Fig. 11).
(10) Lift the battery retaining strap and pull the battery forward (Fig. 12), in front of the passenger seat.

BATTERY (Continued)

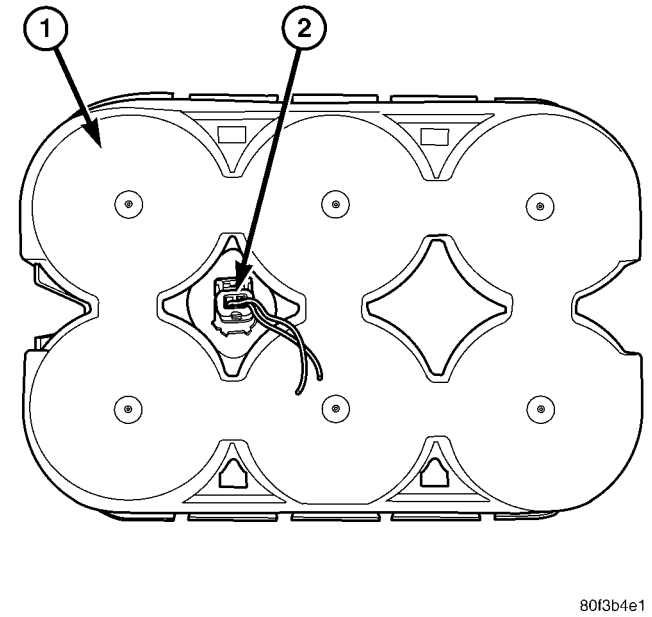

Fig. 10 Battery Temperature Sensor Location

1 - BOTTOM OF BATTERY
2 - BATTERY TEMPERATURE SENSORS

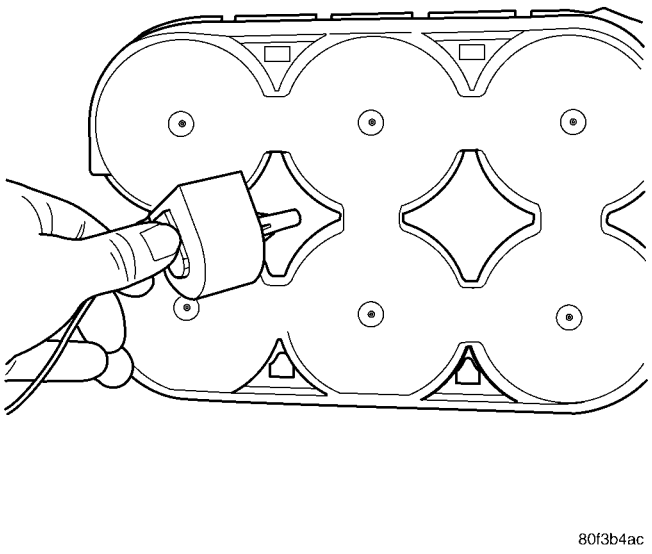

Fig. 11 Removing Battery Temperature Sensor

(11) Disconnect and isolate the battery positive cable. Note the position of the battery positive cable for installation reference (Fig. 13).

(12) Remove the battery from the vehicle.

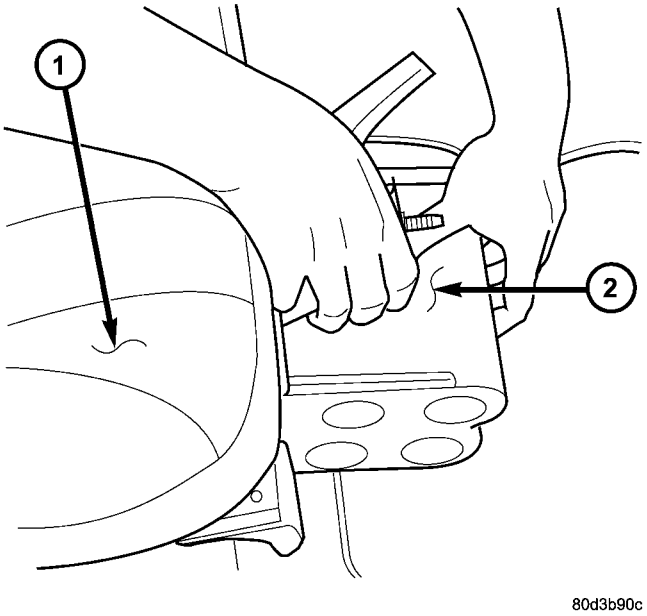

Fig. 12 Battery Remove/Install - Diesel Engine Only

1 - PASSENGER SEAT
2 - BATTERY

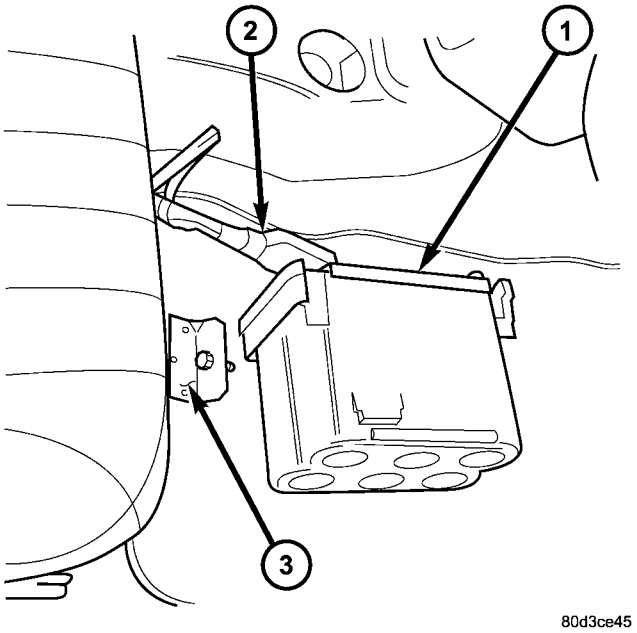

Fig. 13 Spiral Plate Battery - Diesel Engine Only

1 - TOP OF BATTERY
2 - POSITIVE BATTERY CABLE
3 - BATTERY HOLD DOWN BRACKET

BATTERY (Continued)

WARNING: DO NOT USE A CONVENTIONAL LEAD-ACID BATTERY IN PLACE OF THE FACTORY EQUIPPED SPIRAL-PLATE BATTERY. FAILURE TO USE A SEALED SPIRAL-PLATE BATTERY COULD RESULT IN ACID BEING RELEASED INSIDE THE PASSENGER COMPARTMENT AND PERSONAL INJURY.

INSTALLATION

INSTALLATION - GASOLINE ENGINE

When replacing battery, the thermal guard MUST be transferred to the new battery (if equipped).

(1) Install battery in vehicle making sure that the thermal guard (if equipped) is present and battery is properly positioned on battery tray.

(2) Install battery hold down clamp, making sure that it is properly positioned on battery. Torque clamp to 110 in. lbs. ± 20 in. lbs.

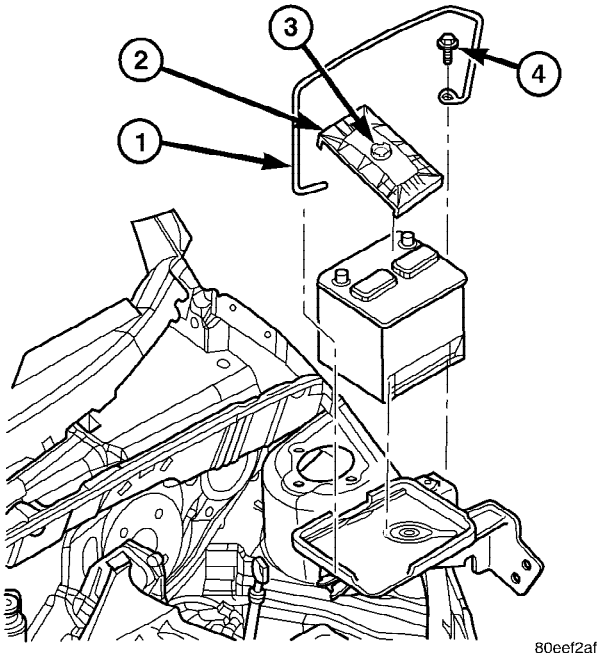

Fig. 14 Battery Remove/Install - Turbo Gasoline Engine Only

1 - HOLD DOWN ROD
2 - HOLD DOWN RETAINER
3 - NON CORROSIVE SPACERS FOR SERVICE BATTERY
4 - BOLT

CAUTION: Vehicles equipped with the turbocharged engine use a unique battery hold down. If the replacement battery is not identical, in size to the original, it may be necessary to use non-corrosive spacers on top of the hold down retainer (Fig. 14) to properly secure the battery in the battery tray.

(3) Install battery cables on battery posts. Install battery positive cable first.

(4) Torque clamp nuts to 110 in. lbs. ± 20 in. lbs.

(5) Install air cleaner housing (Refer to 9 - ENGINE/AIR INTAKE SYSTEM/AIR CLEANER HOUSING - INSTALLATION).

(6) Close hood.

(7) Verify operation of vehicle and systems.

INSTALLATION - DIESEL ENGINE

WARNING: DO NOT USE A CONVENTIONAL LEAD-ACID BATTERY IN PLACE OF THE FACTORY EQUIPPED SPIRAL-PLATE BATTERY. FAILURE TO USE A SEALED SPIRAL-PLATE BATTERY COULD RESULT IN ACID BEING RELEASED INSIDE THE PASSENGER COMPARTMENT AND PERSONAL INJURY.

(1) Position the battery in the vehicle.

(2) Connect the battery positive cable.

(3) Lift the battery retaining strap and slide the battery in its tray far enough to install the battery temperature sensor. Install the battery temperature sensor (Fig. 15).

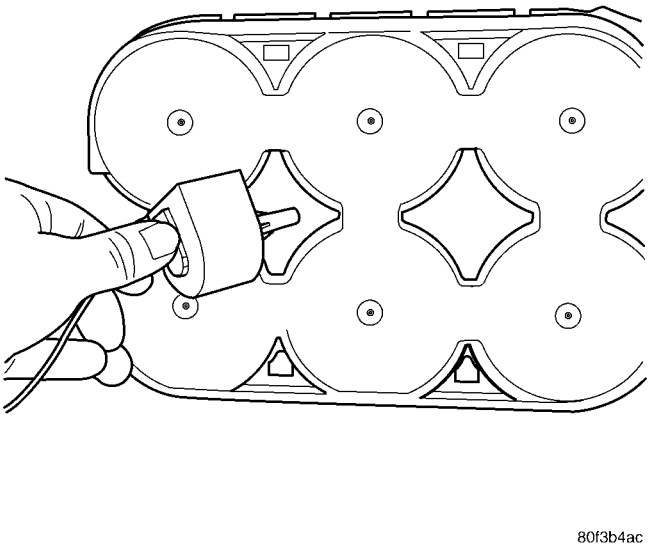

Fig. 15 Removing/Installing Battery Temperature Sensor

(4) Slide the battery all the way into its battery hold down tray and install bolt and retainer. Torque to 110 in. lbs. ±20 in. lbs. Make certain the battery is properly held in place, you should not be able to move the battery in any direction by using normal hand force.

BATTERY (Continued)

CAUTION: Vehicles equipped with the diesel engine use a unique battery hold down. If the replacement battery is not identical, in size to the original, it may be necessary to use non-corrosive spacers in between the hold down retainer to properly secure the battery in the battery tray.

(5) Clip the vent tubing assembly on the battery retaining strap.
(6) Connect the vent tube assembly.

WARNING: BE CERTAIN TO PROPERLY CONNECT THE BATTERY VENT SYSTEM. FAILURE TO DO SO COULD RESULT IN EXPLOSIVE/CAUSTIC FUMES BEING RELEASED INSIDE THE VEHICLES PASSENGER COMPARTMENT. REPLACE ANY PART OF THE VENT SYSTEM IF IT SHOWS ANY SIGNS OF WEAR, CRACKING, COLLAPSING, PUNCTURE OR ANY OTHER FORM OF IMPERFECTION.

(7) Connect the battery negative cable.
(8) Install the seat front trim panel.
(9) Install the two screws in the seat front trim panel.
(10) Close the passenger door.
(11) Verify operation of vehicle and systems.

BATTERY HOLDDOWN

DESCRIPTION

The battery holddown includes a bolt and a holddown bracket/rod. On gasoline engine equipped vehicles, the battery holddown bracket bolts directly to the battery tray (Fig. 16) and when installed properly meshes with the battery case to form a secure and stable battery holddown assembly. On diesel engine equipped vehicles, the battery holddown and battery are located under the passenger front seat.

When installing a battery into the battery tray, it is important that the hold down hardware is properly installed and that the fasteners are tightened to the proper specifications. Improper hold down fastener tightness, whether too loose or too tight, can result in damage to the battery, the vehicle, or both.

CAUTION: Never operate a vehicle without a battery holddown device properly installed. Damage to the vehicle, components and battery could result.

OPERATION

The battery holddown secures the battery in the battery tray. This holddown is designed to prevent battery movement during the most extreme vehicle operation conditions. Periodic removal and lubrication of the battery holddown hardware is recommended to prevent hardware seizure at a later date.

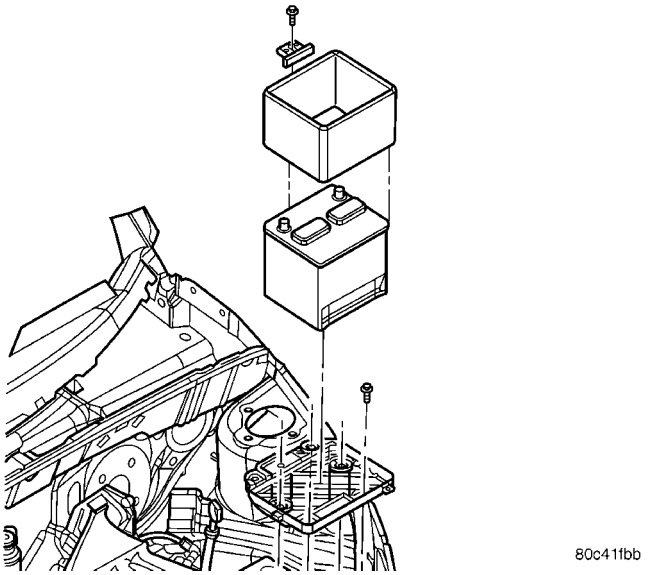

Fig. 16 Conventional Battery Holddown - Gasoline Engine Only

REMOVAL

(1) Disconnect and isolate the negative battery cable or remote negative battery post.
(2) On gasoline engine vehicles, remove the air cleaner housing (Refer to 9 - ENGINE/AIR INTAKE SYSTEM/AIR CLEANER HOUSING - REMOVAL).
(3) On diesel engine equipped vehicles, remove the front passengers seat.
(4) Remove the battery hold down retaining bolt(s).
(5) Remove the battery hold down from the vehicle.

INSTALLATION

(1) Install the battery hold down in the vehicle.
(2) On gasoline engine equipped vehicles, install the battery and hold down retaining bolt(s).
(3) On gasoline engine equipped vehicles, install the air cleaner housing (Refer to 9 - ENGINE/AIR INTAKE SYSTEM/AIR CLEANER HOUSING - INSTALLATION).
(4) On diesel engine equipped vehicles, install the passenger front seat.
(5) On diesel engine equipped vehicles, install the battery. Refer to the procedure in this section of the manual for detailed instructions.
(6) Connect the negative battery cable.

BATTERY CABLES

DESCRIPTION

The battery cables are large gauge, stranded copper wires sheathed within a heavy plastic or synthetic rubber insulating jacket. The wire used in the battery cables combines excellent flexibility and reliability with high electrical current carrying capacity. The battery cables feature a clamping type female battery terminal made of stamped sheet metal that is die cast onto one end of the battery cable wire. A pinch-bolt and nut are installed at the open end of the female battery terminal clamp. Large eyelet type terminals are crimped onto the opposite end of the battery cable wire and then soldered. The battery positive cable wires have a red insulating jacket to provide visual identification and feature a larger female battery terminal clamp to allow connection to the larger battery positive terminal post. The battery negative cable wires have a black insulating jacket and a smaller female battery terminal clamp.

Both the battery positive and negative cables are available for service replacement only as a unit with the battery wire harness, which may include portions of the wiring circuits for the generator and other components on some models.

OPERATION

The battery cables connect the battery terminal posts to the vehicle electrical system. These cables also provide a path back to the battery for electrical current generated by the charging system for restoring the voltage potential of the battery. The female battery terminal clamps on the ends of the battery cable wires provide a strong and reliable connection of the battery cable to the battery terminal posts. The terminal pinch bolts allow the female terminal clamps to be tightened around the male terminal posts on the top of the battery. The eyelet terminals secured to the opposite ends of the battery cable wires from the female battery terminal clamps provide secure and reliable connection of the battery cables to the vehicle electrical system.

One wire has an eyelet terminal that connects the battery positive cable to the B(+) terminal stud of the Power Distribution Center (PDC), and the other wire has an eyelet terminal that connects the battery positive cable to the B(+) terminal stud of the engine starter motor solenoid. The battery negative cable terminal clamp has one wire as an eyelet terminal that connects the battery negative cable to the vehicle powertrain through a ground connection, typically on the engine cylinder block.

DIAGNOSIS AND TESTING - BATTERY CABLES

A voltage drop test will determine if there is excessive resistance in the battery cable terminal connections or the battery cable. If excessive resistance is found in the battery cable connections, the connection point should be disassembled, cleaned of all corrosion or foreign material, then reassembled. Following reassembly, check the voltage drop for the battery cable connection and the battery cable again to confirm repair.

When performing the voltage drop test, it is important to remember that the voltage drop is giving an indication of the resistance between the two points at which the voltmeter probes are attached. **EXAMPLE:** When testing the resistance of the battery positive cable, touch the voltmeter leads to the battery positive cable terminal clamp and to the battery positive cable eyelet terminal at the starter solenoid B(+) terminal stud. If you probe the battery positive terminal post and the battery positive cable eyelet terminal at the starter solenoid B(+) terminal stud, you are reading the combined voltage drop in the battery positive cable terminal clamp-to-terminal post connection and the battery positive cable.

VOLTAGE DROP TEST

The following operation will require a voltmeter accurate to 1/10 (0.10) volt. Before performing this test, be certain that the following procedures are accomplished:

- The battery is fully-charged and load tested. Refer to Standard Procedures for the proper battery charging and load test procedures.
- Fully engage the parking brake.
- If the vehicle is equipped with an automatic transmission, place the gearshift selector lever in the Park position. If the vehicle is equipped with a manual transmission, place the gearshift selector lever in the Neutral position and block the clutch pedal in the fully depressed position.
- Verify that all lamps and accessories are turned off.
- To prevent the engine from starting, remove the Automatic Shut Down (ASD) relay. The ASD relay is located in the Power Distribution Center (PDC), in the engine compartment. See the fuse and relay layout label affixed to the underside of the PDC cover for ASD relay identification and location.

(1) Connect the positive lead of the voltmeter to the battery negative terminal post. Connect the negative lead of the voltmeter to the battery negative cable terminal clamp (Fig. 17). Rotate and hold the ignition switch in the Start position. Observe the voltmeter. If voltage is detected, correct the poor connection between the battery negative cable terminal clamp and the battery negative terminal post.

BATTERY CABLES (Continued)

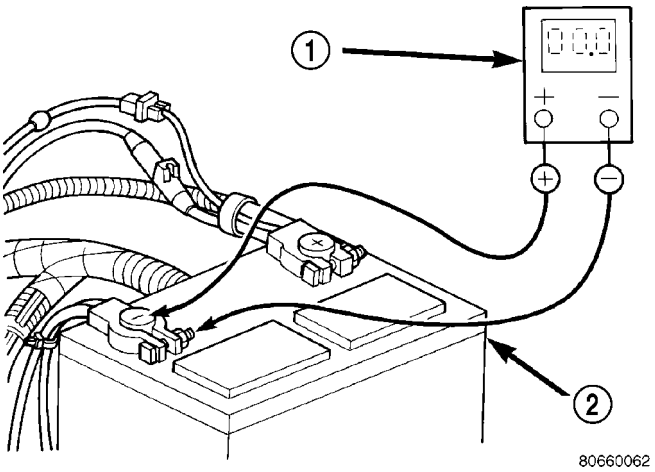

Fig. 17 Testing Battery Negative Connection Resistance

1 - VOLTMETER
2 - BATTERY

(2) Connect the positive lead of the voltmeter to the battery positive terminal post. Connect the negative lead of the voltmeter to the battery positive cable terminal clamp (Fig. 18). Rotate and hold the ignition switch in the Start position. Observe the voltmeter. If voltage is detected, correct the poor connection between the battery positive cable terminal clamp and the battery positive terminal post.

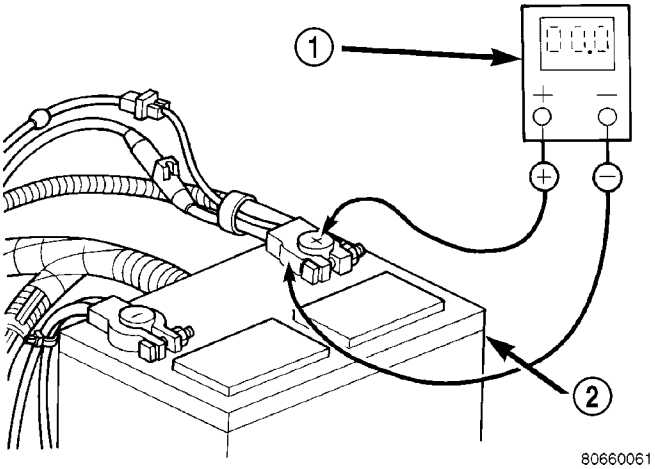

Fig. 18 Testing Battery Positive Connection Resistance

1 - VOLTMETER
2 - BATTERY

(3) Connect the voltmeter to measure between the battery positive cable terminal clamp and the starter solenoid B(+) terminal stud (Fig. 19). Rotate and hold the ignition switch in the Start position. Observe the voltmeter. If the reading is above 0.2 volt, clean and tighten the battery positive cable eyelet terminal connection at the starter solenoid B(+) terminal stud. Repeat the test. If the reading is still above 0.2 volt, replace the faulty battery positive cable.

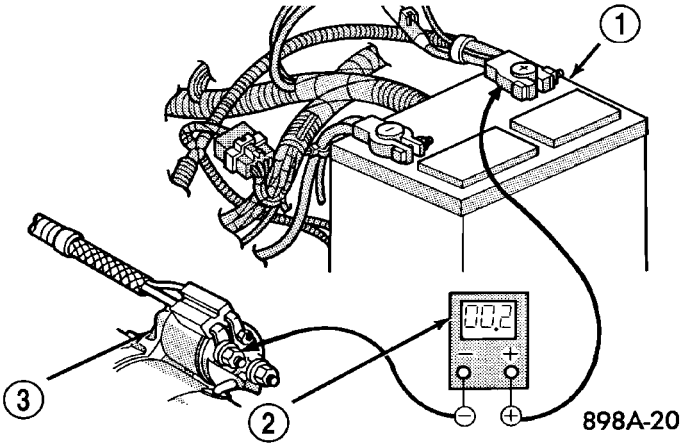

Fig. 19 Testing Battery Positive Cable Resistance

1 - BATTERY
2 - VOLTMETER
3 - STARTER MOTOR

(4) Connect the voltmeter to measure between the battery negative cable terminal clamp and a good clean ground on the engine block (Fig. 20). Rotate and hold the ignition switch in the Start position. Observe the voltmeter. If the reading is above 0.2 volt, clean and tighten the battery negative cable eyelet terminal connection to the engine block. Repeat the test. If the reading is still above 0.2 volt, replace the faulty battery negative cable.

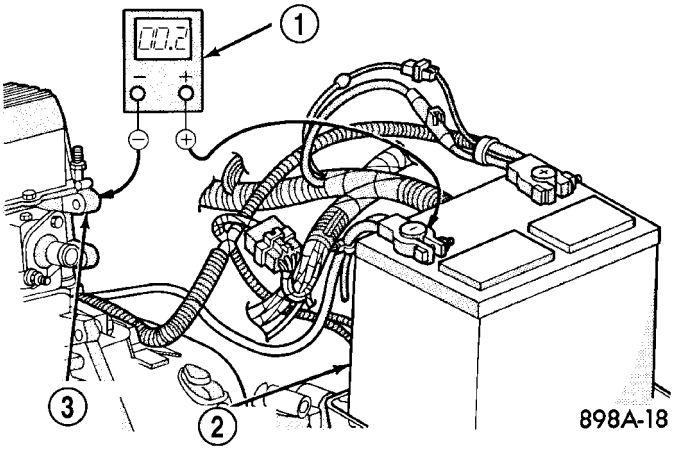

Fig. 20 Testing Ground Circuit Resistance

1 - VOLTMETER
2 - BATTERY
3 - ENGINE GROUND

REMOVAL

(1) Turn the ignition switch to the Off position. Be certain that all electrical accessories are turned off.

(2) Disconnect and isolate the remote battery negative cable terminal.

BATTERY CABLES (Continued)

(3) Remove the battery from the vehicle. Refer to the procedure in this group.

(4) One at a time, trace the battery cable retaining pushpins, fasteners and routing clips until the cables are free from the vehicle.

(5) Remove the battery cables from the engine compartment.

INSTALLATION

(1) Position the battery cables in the engine compartment.

(2) One at a time, install the battery cable retaining pushpins, fasteners and routing clips until the cables are installed exactly where they were in the vehicle.

(3) Install the battery in the vehicle. Refer to the procedure in this group.

(4) Connect the remote battery negative cable terminal.

BATTERY TRAY

DESCRIPTION

The battery is placed and secured in a plastic battery tray. On gasoline engine equipped vehicles, the battery tray is located in the left front side of the vehicle, next to the left strut tower (Fig. 21). On diesel engine equipped vehicles, the battery tray is located in the passenger compartment, under the passenger front seat. Refer to Battery Hold down for more information on hold down hardware.

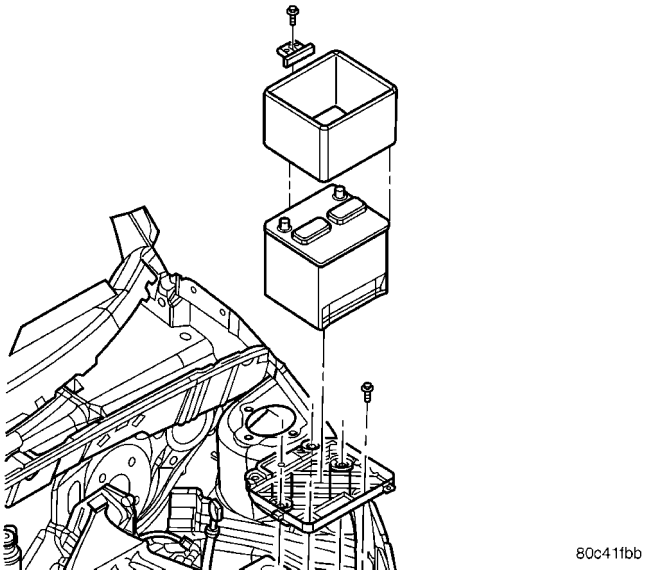

Fig. 21 Battery Remove/Install - Gasoline Engine Only

OPERATION

The battery tray provides a secure mounting location and supports the battery. On some vehicles, the battery tray also provides the anchor point/s for the battery holddown hardware. The battery tray and the battery holddown hardware combine to secure and stabilize the battery, which prevents battery movement during vehicle operation. Unrestrained battery movement during vehicle operation could result in damage to the vehicle, the battery, or both.

REMOVAL

REMOVAL - GASOLINE ENGINE

(1) Open the hood.

(2) Remove the battery (Refer to 8 - ELECTRICAL/BATTERY SYSTEM/BATTERY - REMOVAL).

(3) Remove the bolts retaining the battery tray.

(4) Lift the battery tray out of the engine compartment and remove from the vehicle.

REMOVAL - DIESEL ENGINE

(1) Remove the battery (Refer to 8 - ELECTRICAL/BATTERY SYSTEM/BATTERY - REMOVAL).

(2) Remove the passengers front seat (Refer to 23 - BODY/SEATS/SEAT - REMOVAL).

(3) Remove the battery tray retaining bolt.

(4) Remove the battery tray from the vehicle.

INSTALLATION

INSTALLATION - GASOLINE ENGINE

(1) Place battery tray into place in the engine compartment.

(2) Install the bolts retaining the battery tray.

(3) Install the battery (Refer to 8 - ELECTRICAL/BATTERY SYSTEM/BATTERY - INSTALLATION).

(4) Close hood.

INSTALLATION - DIESEL ENGINE

(1) Place battery tray into place in the passenger compartment.

(2) Install the battery tray retaining bolt.

(3) Install the front passenger seat (Refer to 23 - BODY/SEATS/SEAT - INSTALLATION).

(4) Install the battery (Refer to 8 - ELECTRICAL/BATTERY SYSTEM/BATTERY - INSTALLATION).

(5) Install and connect the vent tube assembly.

THERMAL GUARD

DESCRIPTION

On gasoline engine equipped vehicles, a flexible thermal guard wraps around the battery case to enclose the sides of the battery (Fig. 22). The thermal guard consists of a plastic cloth outer skin with a polyester based insulator fiber.

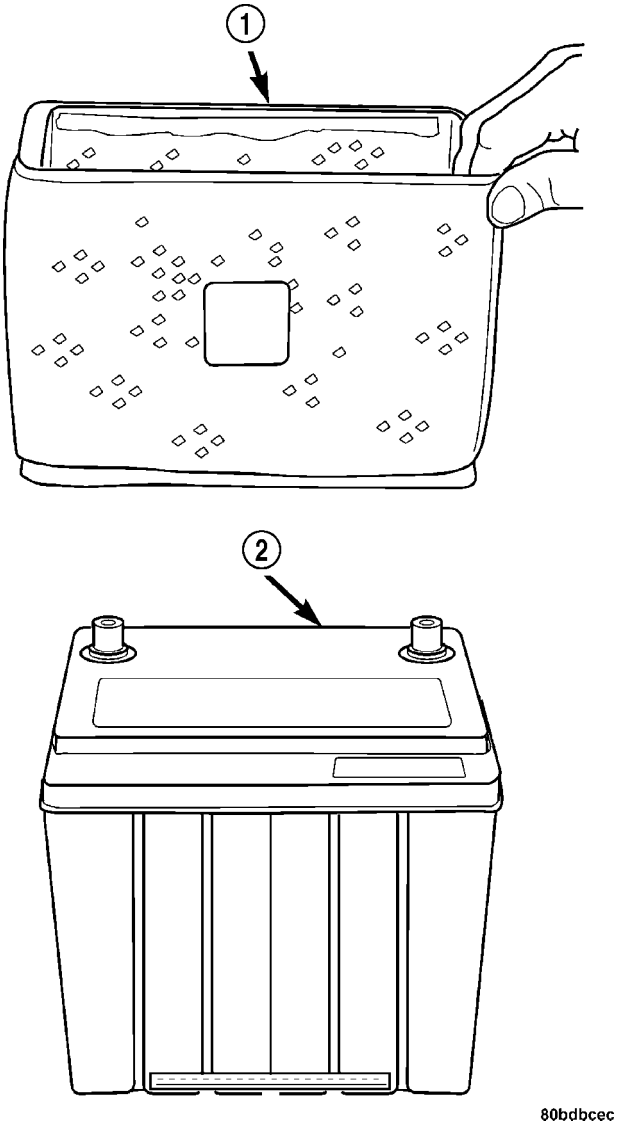

Fig. 22 Battery Thermal Guard

1 - THERMAL GUARD
2 - BATTERY

OPERATION

The thermal guard protects the battery from engine compartment temperature extremes. The temperature of the battery can affect battery performance. The air trapped in the thermal guard creates a dead air space, which helps to insulate the sides of the battery case from the air temperature found in the surrounding engine compartment.

REMOVAL

WARNING:
TO PROTECT THE HANDS FROM BATTERY ACID, A SUITABLE PAIR OF HEAVY DUTY RUBBER GLOVES, NOT THE HOUSEHOLD TYPE, SHOULD BE WORN WHEN REMOVING OR SERVICING A BATTERY. SAFETY GLASSES ALSO SHOULD BE WORN.

(1) Make sure ignition switch is in OFF position and all accessories are OFF.
(2) Open hood.
(3) Remove air cleaner housing (Refer to 9 - ENGINE/AIR INTAKE SYSTEM/AIR CLEANER HOUSING - REMOVAL).
(4) Disconnect and isolate the battery negative cable.
(5) Disconnect the battery positive cable.
(6) Loosen bolt and retainer that holds the battery down to the tray.
(7) Lift battery out of battery tray and remove from vehicle.
(8) Carefully lift the thermal guard off over the battery taking care not to tear it.
(9) Remove the thermal guard from battery.

INSTALLATION

When replacing battery, the thermal guard MUST be transferred to the new battery.
(1) Slip the battery thermal guard over the battery being careful not to tear it.
(2) Install battery in vehicle.
(3) Install battery hold down clamp, making sure that it is properly positioned on battery.
(4) Connect battery cable clamps to battery posts. Install battery positive cable first.
(5) Tighten clamp nuts securely.
(6) Install the air cleaner housing (Refer to 9 - ENGINE/AIR INTAKE SYSTEM/AIR CLEANER HOUSING - INSTALLATION).

BATTERY TRAY SUPPORT BRACKET

REMOVAL

(1) Disconnect and isolate the negative battery cable.

(2) Remove the air cleaner housing.

(3) Remove the battery (Refer to 8 - ELECTRICAL/BATTERY SYSTEM/BATTERY - REMOVAL).

(4) Remove the battery tray and battery temperature sensor.

(5) Raise the vehicle on a hoist.

(6) Working under the vehicle, remove two of the battery tray support bracket retaining bolts.

(7) Lower the vehicle on the hoist.

(8) Remove the remaining two battery tray support bracket retaining bolts and remove the bracket from the vehicle.

INSTALLATION

(1) Position the battery tray support bracket and install the two battery tray support bracket retaining bolts.

(2) Raise the vehicle on the hoist.

(3) Working under the vehicle, install the two battery tray support bracket retaining bolts.

(4) Lower the vehicle on a hoist.

(5) Install the battery tray and battery temperature sensor (if equipped).

(6) Install the battery (Refer to 8 - ELECTRICAL/BATTERY SYSTEM/BATTERY - INSTALLATION).

(7) Install the air cleaner housing.

(8) Connect the negative battery cable.

CHARGING

TABLE OF CONTENTS

page

CHARGING
DESCRIPTION - CHARGING SYSTEM 23
OPERATION - CHARGING SYSTEM 23
DIAGNOSIS AND TESTING - ON-BOARD DIAGNOSTIC SYSTEM 24
BATTERY TEMPERATURE SENSOR
OPERATION 25
REMOVAL - 2.0, 2.4, and 2.4L TURBO 25
INSTALLATION - 2.0, 2.4, and 2.4L TURBO 26
GENERATOR
DESCRIPTION 26
OPERATION 26
REMOVAL
REMOVAL - 2.0/2.4L 27
REMOVAL - 2.4L TURBO 28
REMOVAL - 2.2 DIESEL 31
INSTALLATION
INSTALLATION - 2.0/2.4L 31
INSTALLATION - 2.4L TURBO 32
INSTALLATION - 2.2 DIESEL 32
VOLTAGE REGULATOR
DESCRIPTION 33
OPERATION 33

CHARGING

DESCRIPTION - CHARGING SYSTEM

The charging system consists of:

- Generator
- Decoupler Pulley (If equipped)
- Electronic Voltage Regulator (EVR) circuitry within the Powertrain Control Module (PCM)
- Ignition switch (refer to the Ignition System section for information)
- Battery (refer to the Battery section for information)
- Inlet Air Temperature (calculated battery temperature 1.6L)
- Battery Temperature Sensor (2.0L, 2.4L, and 2.4L turbo)
- Voltmeter (refer to the Instrument Cluster section for information if equipped)
- Wiring harness and connections (refer to the Wiring section for information)
- Accessory drive belt (refer to the Cooling section for more information)

OPERATION - CHARGING SYSTEM

The charging system is turned on and off with the ignition switch. The system is on when the engine is running and the ASD relay is energized. The ASD relay is energized when the PCM grounds the ASD control circuit. This voltage is connected through the PCM or IPM (intelligent power module) and supplied to one of the generator field terminals (Gen. Source +) at the back of the generator.

The generator is driven by the engine through a serpentine belt and pulley or decoupler pulley arrangement.

The amount of DC current produced by the generator is controlled by the EVR (field control) circuitry contained within the PCM. This circuitry is connected in series with the second rotor field terminal and ground.

Battery temperature is detected using a stand alone sensor for vehicles having 2.0, 2.4, and 2.4L Turbo engines. For 1.6L engines vehicles battery temperature is predicted using the values of 4 existing sensors inputs. These inputs are Inlet Air Sensor, Coolant Sensor, Vehicle Speed Sensor, and Fan State (on/off). The charging lamp will come on if either the inlet air temperature, coolant temperature, or vehicle speed sensor fail. If one of these sensors fail the charging system will default to 13.5 Volts. This temperature data, along with data from monitored line voltage (ASD voltage sense circuit), is used by the PCM to vary the battery charging rate. This is done by cycling the ground path to control the strength of the rotor magnetic field. The PCM then compensates and regulates generator current output accordingly to maintain system voltage at the targeted system voltage based on battery temperature.

All vehicles are equipped with On-Board Diagnostics (OBD). All OBD-sensed systems, including EVR (field control) circuitry, are monitored by the PCM. Each monitored circuit is assigned a Diagnostic Trouble Code (DTC). The PCM will store a DTC in electronic memory for certain failures it detects. Refer to On-Board Diagnostics in the Electronic Control Modules(Refer to 8 - ELECTRICAL/ELECTRONIC CONTROL MODULES/POWERTRAIN CONTROL MODULE - DESCRIPTION) section for more DTC information.

The Check Gauges Lamp (if equipped) monitors: **charging system voltage,** engine coolant tempera-

CHARGING (Continued)

ture and engine oil pressure. If an extreme condition is indicated, the lamp will be illuminated. This is done as reminder to check the three gauges. The signal to activate the lamp is sent via the PCI bus circuits. The lamp is located on the instrument panel. Refer to the Instrument Cluster section for additional information.

DIAGNOSIS AND TESTING - ON-BOARD DIAGNOSTIC SYSTEM

The Powertrain Control Module (PCM) monitors critical input and output circuits of the charging system, making sure they are operational. A Diagnostic Trouble Code (DTC) is assigned to each input and output circuit monitored by the OBD system. Some circuits are checked continuously and some are checked only under certain conditions.

If the OBD system senses that a monitored circuit is bad, it will put a DTC into electronic memory. The DTC will stay in electronic memory as long as the circuit continues to be bad. The PCM is programmed to clear the memory after 40 good trip if the problem does not occur again.

DIAGNOSTIC TROUBLE CODES

A DTC description can be read using the DRBIII® scan tool. Refer to the appropriate Powertrain Diagnostic Procedures manual for information.

A DTC does not identify which component in a circuit is bad. Thus, a DTC should be treated as a symptom, not as the cause for the problem. In some cases, because of the design of the diagnostic test procedure, a DTC can be the reason for another DTC to be set. Therefore, it is important that the test procedures be followed in sequence, to understand what caused a DTC to be set.

ERASING DIAGNOSTIC TROUBLE CODES

The DRBIII® Scan Tool must be used to erase a DTC.

The following procedures may be used to diagnose the charging system if:

- the check gauges lamp or battery lamp is illuminated with the engine running
- the voltmeter (if equipped) does not register properly
- an undercharged or overcharged battery condition occurs.

Remember that an undercharged battery is often caused by:

- accessories being left on with the engine not running
- a faulty or improperly adjusted switch that allows a lamp to stay on. Refer to Ignition-Off Draw Test (Refer to 8 - ELECTRICAL/BATTERY SYSTEM/ BATTERY - STANDARD PROCEDURE)
- loose generator belt.

INSPECTION

The Powertrain Control Module (PCM) monitors critical input and output circuits of the charging system, making sure they are operational. A Diagnostic Trouble Code (DTC) is assigned to each input and output circuit monitored by the On-Board Diagnostic (OBD) system. Some charging system circuits are checked continuously, and some are checked only under certain conditions.

Refer to Diagnostic Trouble Codes in; Powertrain Control Module; Electronic Control Modules for more DTC information. This will include a complete list of DTC's including DTC's for the charging system.

To perform a complete test of the charging system, refer to the appropriate Powertrain Diagnostic Procedures service manual and the DRBIII® scan tool. Perform the following inspections before attaching the scan tool.

(1) Inspect the battery condition. Refer to the Battery section (Refer to 8 - ELECTRICAL/BATTERY SYSTEM - DIAGNOSIS AND TESTING) for procedures.

(2) Inspect condition of battery cable terminals, battery posts, connections at engine block, starter solenoid and relay. They should be clean and tight. Repair as required.

(3) Inspect all fuses in both the fuseblock and Power Distribution Center (PDC) for tightness in receptacles. They should be properly installed and tight. Repair or replace as required.

(4) Inspect generator mounting bolts for tightness. Replace or tighten bolts if required. Refer to the Generator Removal/Installation section of this group for torque specifications (Refer to 8 - ELECTRICAL/ CHARGING - SPECIFICATIONS).

(5) Inspect generator drive belt condition and tension. Tighten or replace belt as required. Refer to Belt Tension Specifications(Refer to 7 - COOLING/ ACCESSORY DRIVE - SPECIFICATIONS).

(6) Inspect decoupler pulley (if equipped). Ensure decoupler pulley is driving the alternator rotor.

(7) Inspect automatic belt tensioner (if equipped). Refer to the Cooling System for more information.

(8) Inspect generator electrical connections at generator field, battery output, and ground terminal (if equipped). Also check generator ground wire connection at engine (if equipped). They should all be clean and tight. Repair as required.

BATTERY TEMPERATURE SENSOR

OPERATION

The battery temperature sensor is used to determine the battery temperature and control battery charging rate. This temperature data, along with data from monitored line voltage, is used by the PCM to vary the battery charging rate. System voltage will be higher at colder temperatures and is gradually reduced at warmer temperatures.

The sensor is located on the bottom of the battery tray, and makes contacts with the bottom of the battery.

REMOVAL - 2.0, 2.4, and 2.4L TURBO

(1) Disconnect the negative battery cable.
(2) Remove the air cleaner box (Fig. 1).

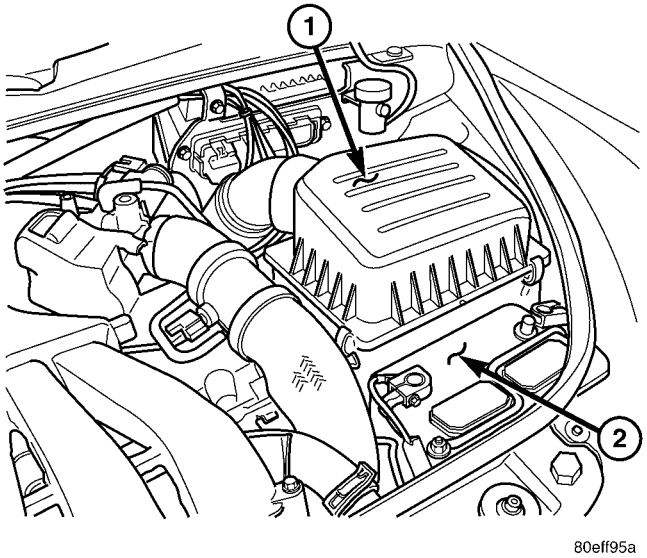

Fig. 1 AIR CLEANER BOX AND BATTERY

1 - Air Cleaner Box
2 - Battery

(3) Remove battery (Fig. 2).
(4) Lift battery tray bottom up.
(5) Disconnect the electrical connector from sensor (Fig. 3).
(6) Remove sensor from battery tray by unlocking tabs from battery tray (Fig. 4) and remove the sensor (Fig. 5).

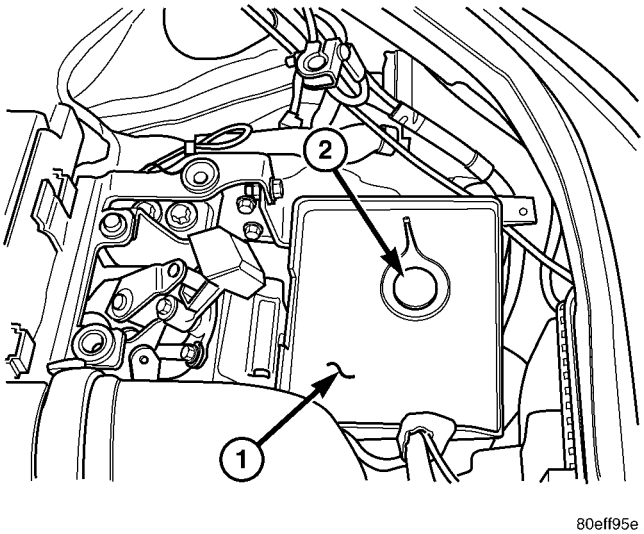

Fig. 2 BATTERY TRAY BOTTOM AND SENSOR

1 - Battery Tray Bottom
2 - Battery Temerature Sensor

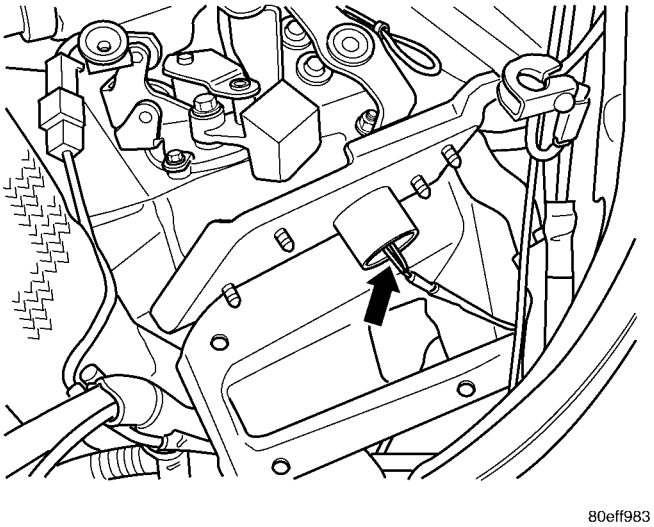

Fig. 3 ELECTRICAL CONNECTOR

BATTERY TEMPERATURE SENSOR (Continued)

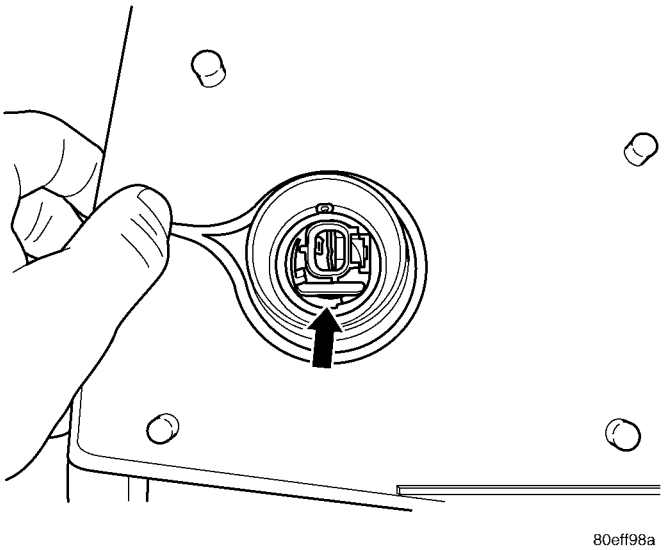

Fig. 4 LOCKING TABS

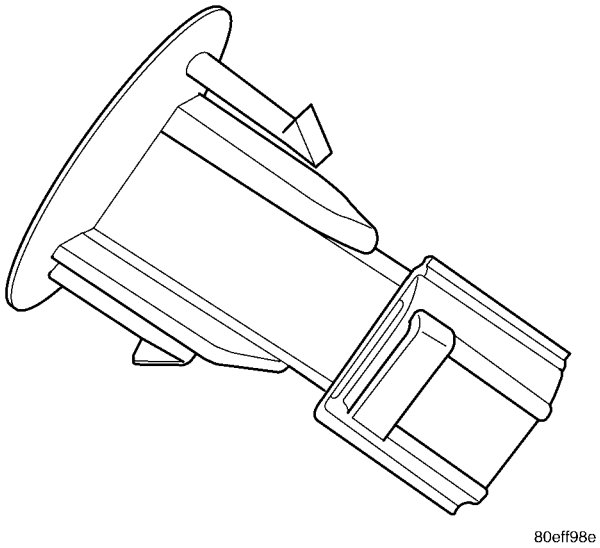

Fig. 5 BATTERY TEMPERATURE SENSOR

INSTALLATION - 2.0, 2.4, and 2.4L TURBO

(1) Install Battery Temperature Sensor into the battery tray bottom (Fig. 4).

(2) Connect the electrical connector to the Battery Temperature Sensor (Fig. 3).

(3) Set battery tray bottom into place (Fig. 2).

(4) Install battery.

(5) Install the air cleaner box (Fig. 1) align the locator pins (Fig. 6) with the rubber grommets in the bracket.

(6) Connect the negative battery cable.

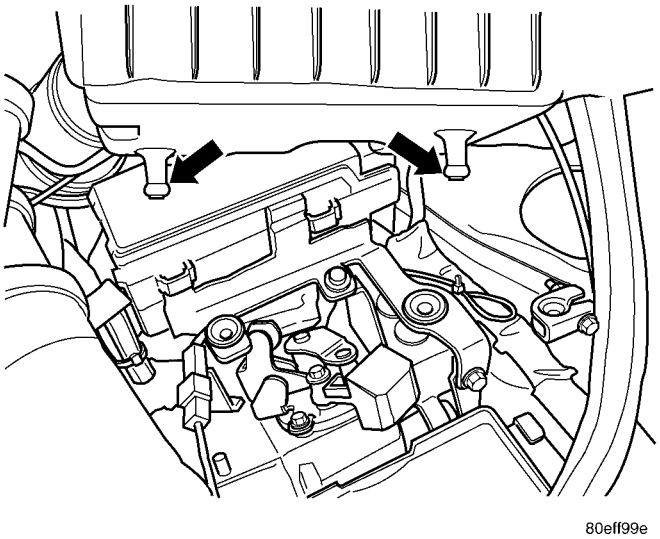

Fig. 6 AIR CLEANER BOX LOCATOR PINS

GENERATOR

DESCRIPTION

The generator is belt-driven by the engine. It is serviced only as a complete assembly. If the generator fails for any reason, the entire assembly must be replaced. The generator produces DC voltage.

OPERATION

As the energized rotor begins to rotate within the generator, the spinning magnetic field induces a current into the windings of the stator coil.

The Y type stator winding connections deliver the induced AC current to 3 positive and 3 negative diodes for rectification. From the diodes, rectified DC current is delivered to the vehicles electrical system through the generator, battery, and ground terminals.

Noise emitting from the generator may be caused by:

- Worn, loose or defective bearings
- Loose or defective drive pulley
- Incorrect, worn, damaged or misadjusted drive belt
- Loose mounting bolts
- Misaligned drive pulley
- Defective stator or diode
- Damaged internal fins

GENERATOR (Continued)

REMOVAL

REMOVAL - 2.0/2.4L

(1) Remove the air cleaner lid, disconnect the inlet air sensor and makeup air hose.

(2) Disconnect the negative battery cable.

(3) Loosen the upper generator T-bolt lock nut (Fig. 7).

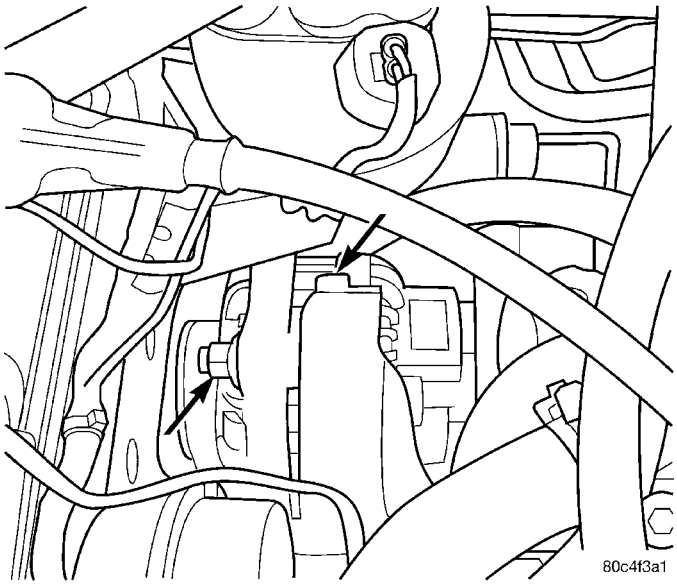

Fig. 7 Generator T-Bolt Locknut and Adjustment Bolt

(4) Raise vehicle on hoist.

(5) Remove the right front wheel.

(6) Remove the accessory drive splash shield (Fig. 8).

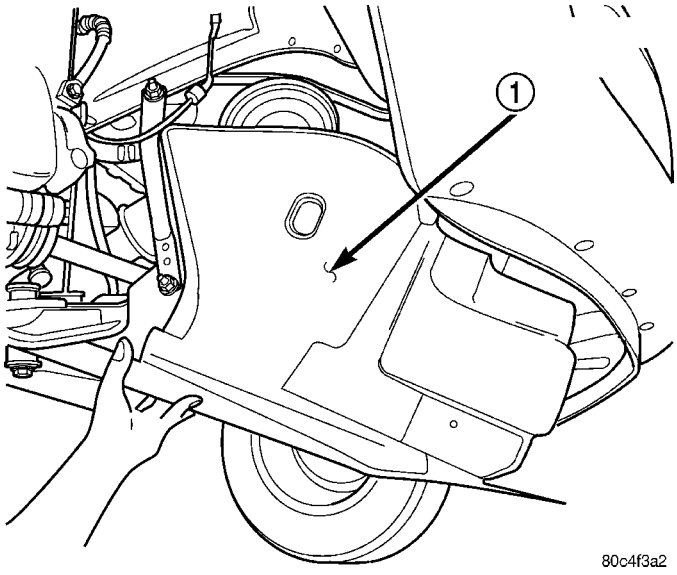

Fig. 8 Accessory Drive Splash Shield

1 - ACCESSORY DRIVE BELT SPLASH SHIELD

(7) Remove the pencil strut (Fig. 9).

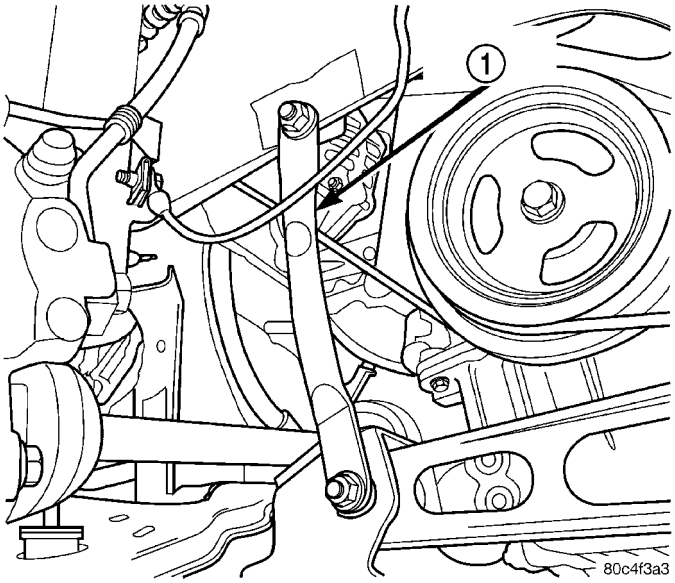

Fig. 9 Pencil Strut

1 - PENCIL STRUT

(8) Loosen the lower pivot bolt (Fig. 10).

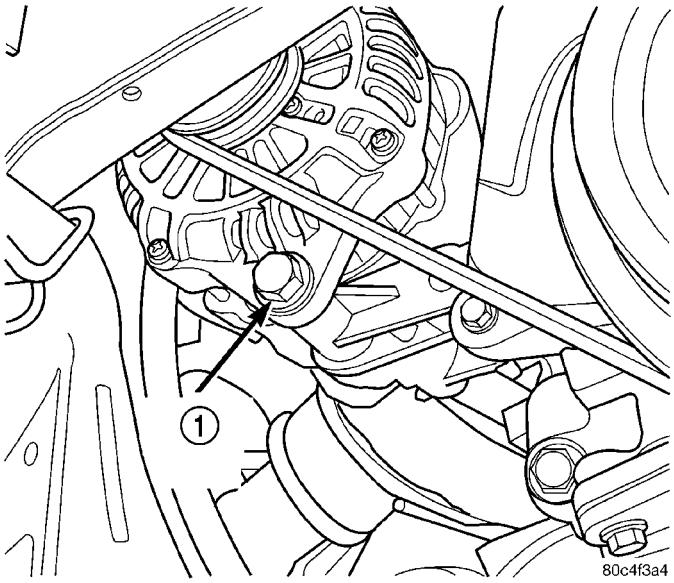

Fig. 10 Lower Pivot Bolt

1 - LOWER PIVOT BOLT

GENERATOR (Continued)

(9) Loosen the accessory drive belt t-bolt.
(10) Unplug field circuit from generator (Fig. 11).

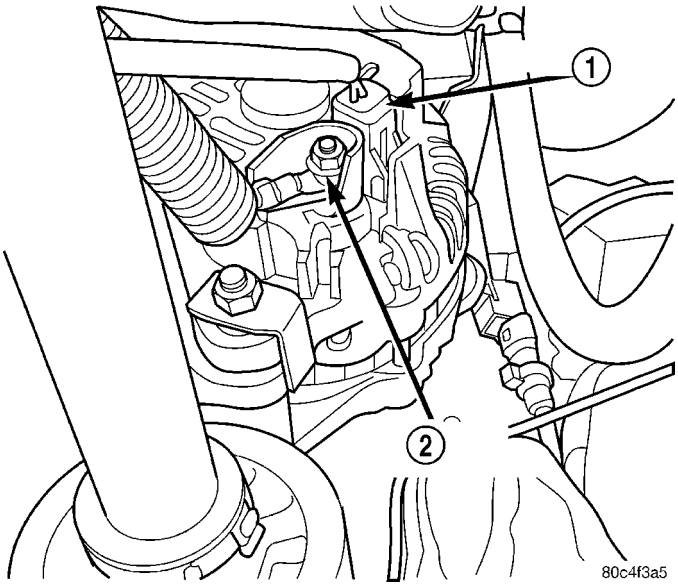

Fig. 11 Battery Connection

1 - FIELD CONNECTOR
2 - BATTERY CONNECTION

(11) Remove the B+ terminal nut and wire.
(12) Remove the generator belt, refer to the Cooling section for more information.
(13) Remove the axle retaining nut.
(14) Remove the lower control arm from steering knuckle.
(15) Remove axle shaft. Put a container under the transmission to catch the transmission fluid from the transmission.
(16) Remove the generator lower mounting bolt and nut from the upper T-bolt.
(17) Remove generator out the bottom (Fig. 12).

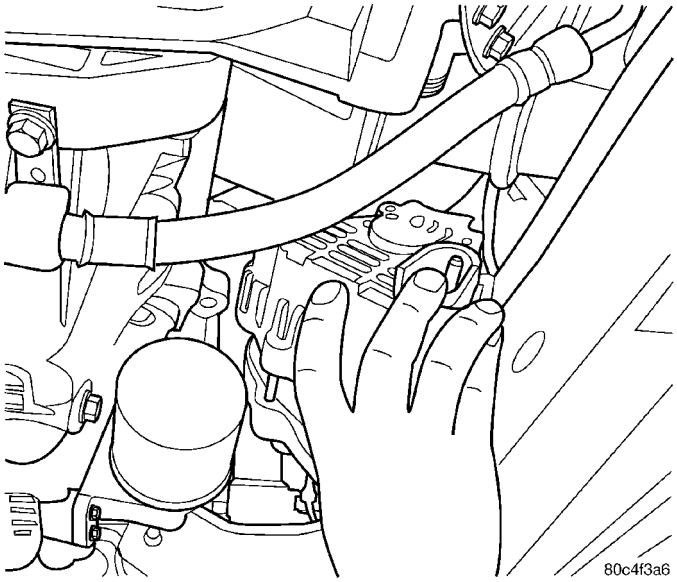

Fig. 12 Generator Removal

REMOVAL - 2.4L TURBO

The generator is located above the oil filter and axle shaft (Fig. 13).

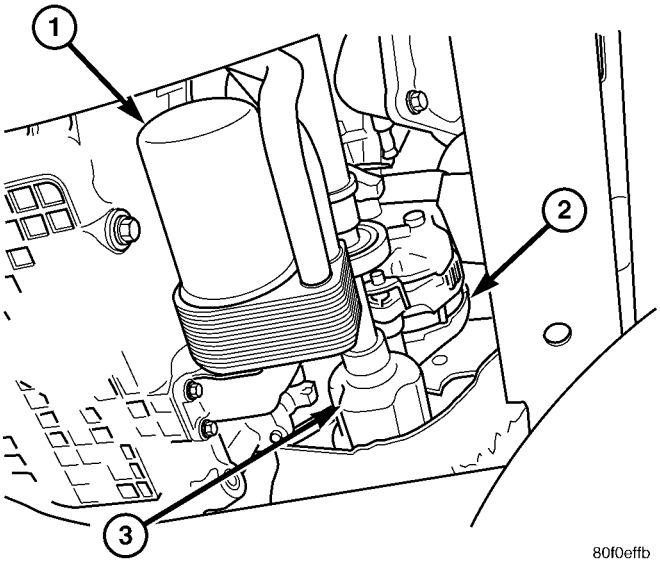

Fig. 13 GENERATOR LOCATION - 2.4L TURBO

1 - Oil Filter
2 - Generator
3 - Axle Shaft

(1) Disconnect the negative battery cable.
(2) Remove the 2 bolts (Fig. 14) from the top of the heat shield on the generator.

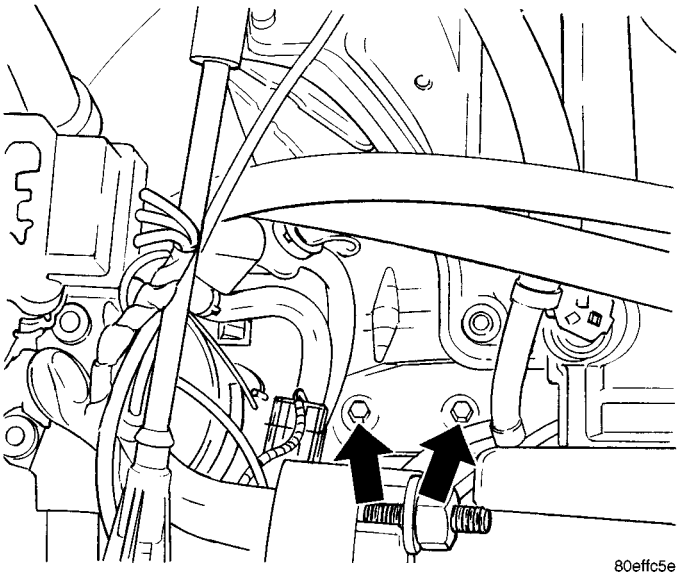

Fig. 14 GENERATOR HEAT SHIELD

GENERATOR (Continued)

(3) Remove nut from the upper T-bolt adjustment bracket (Fig. 15).

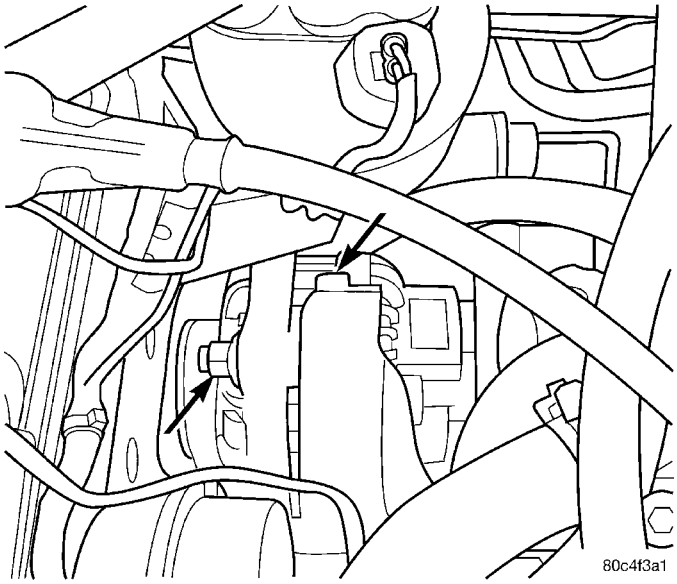

Fig. 15 Generator T-Bolt Locknut and Adjustment Bolt

(4) Raise vehicle and support.
(5) Remove the right front wheel.
(6) Remove the accessory drive splash shield (Fig. 16).

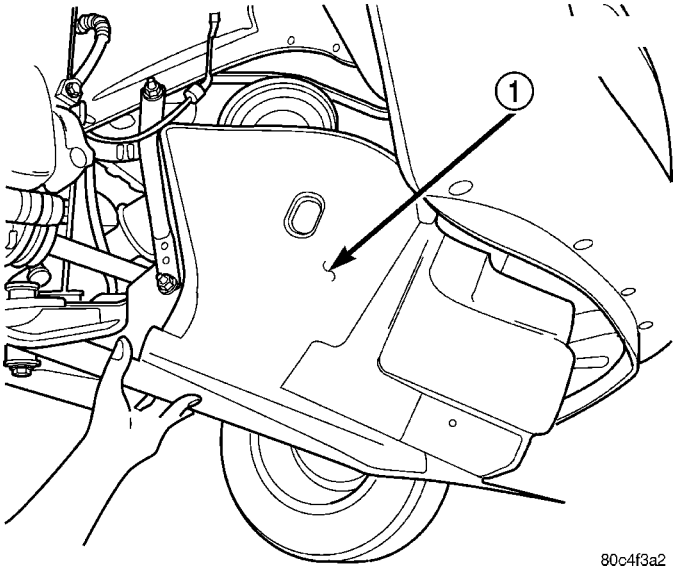

Fig. 16 Accessory Drive Splash Shield

1 - ACCESSORY DRIVE BELT SPLASH SHIELD

(7) Remove the lower heat shield bolt.
(8) Remove the generator heat shield.
(9) Unplug the field circuit from the generator (Fig. 17).

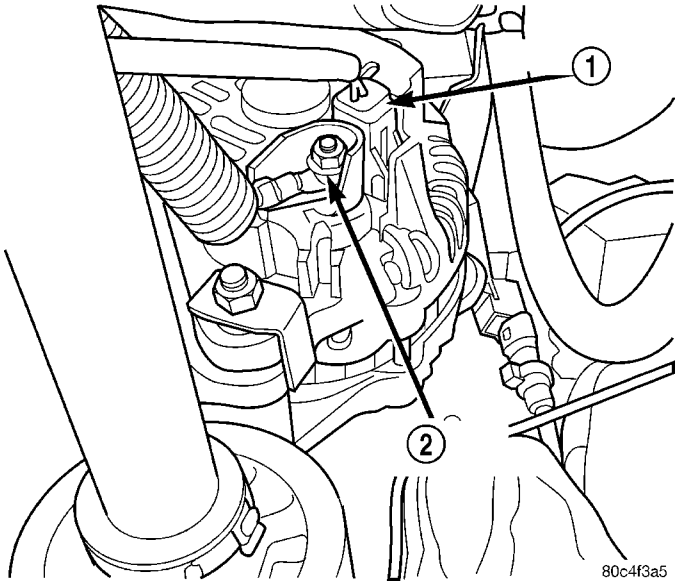

Fig. 17 Battery Connection

1 - FIELD CONNECTOR
2 - BATTERY CONNECTION

(10) Remove the B+ terminal nut and wire.
(11) Loosen the accessory drive belt t-bolt (Fig. 15).
(12) Remove the pencil strut (Fig. 18).

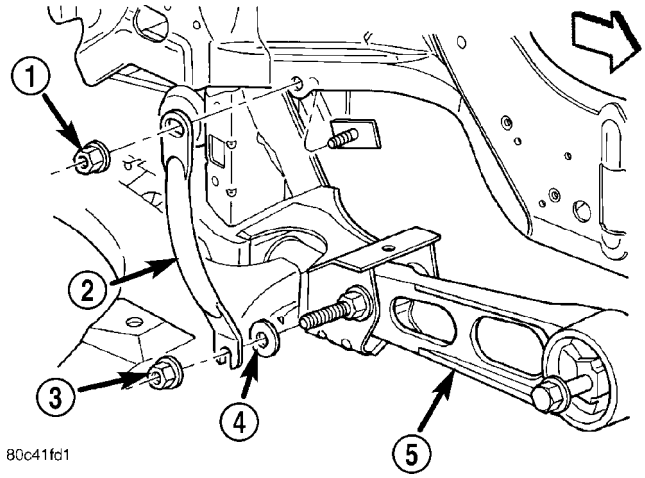

Fig. 18 Strut Mounting

1 - NUT
2 - PENCIL STRUT
3 - NUT
4 - FLAT WASHER
5 - LOWER TORQUE STRUT

GENERATOR (Continued)

(13) Loosen the lower generator pivot bolt (Fig. 19).

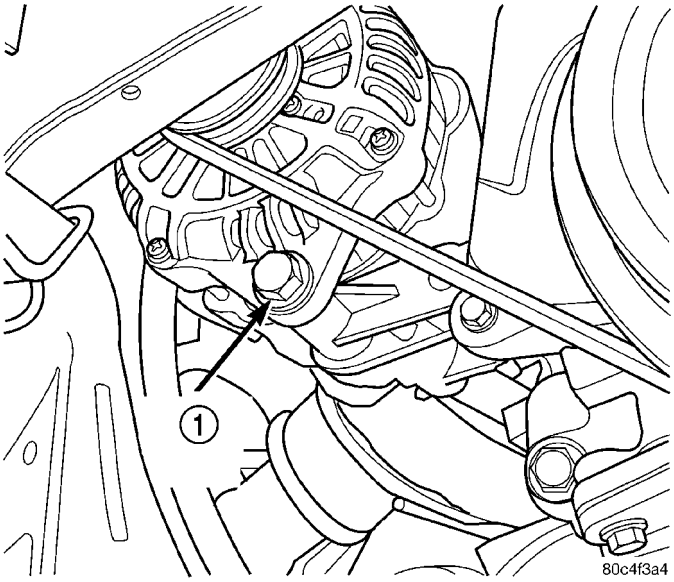

Fig. 19 Lower Pivot Bolt

1 - LOWER PIVOT BOLT

(14) Remove the generator belt, refer to the Cooling section for more information.

(15) Remove the axle retaining nut.

(16) Remove the lower control arm from the steering knuckle (Fig. 20).

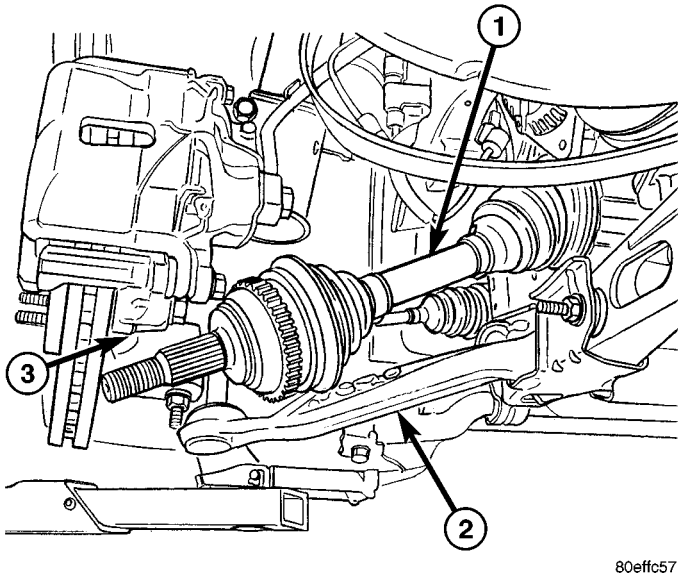

Fig. 20 AXLE SHAFT

1 - Axle Shaft
2 - Lower Control Arm
3 - Steering Knuckle

(17) Remove the 2 bolts for the axle shaft bearing support.

(18) Remove the axle shaft assembly (Fig. 20). Put a container under the transmission to catch the transmission fluid from the transmission.

(19) Remove the generator from the lower mounting bracket and set generator to the side.

(20) Remove the lower mounting bracket (Fig. 21) for the generator.

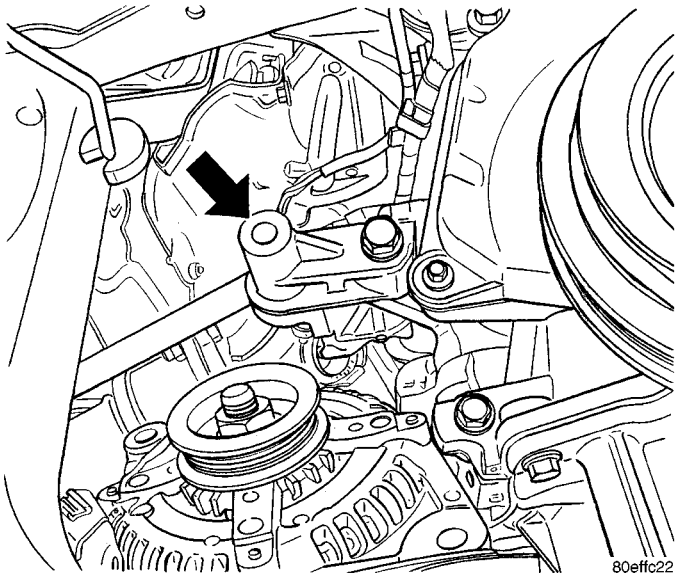

Fig. 21 LOWER MOUNTING BRACKET

(21) Remove generator through the axle shaft hole (Fig. 22).

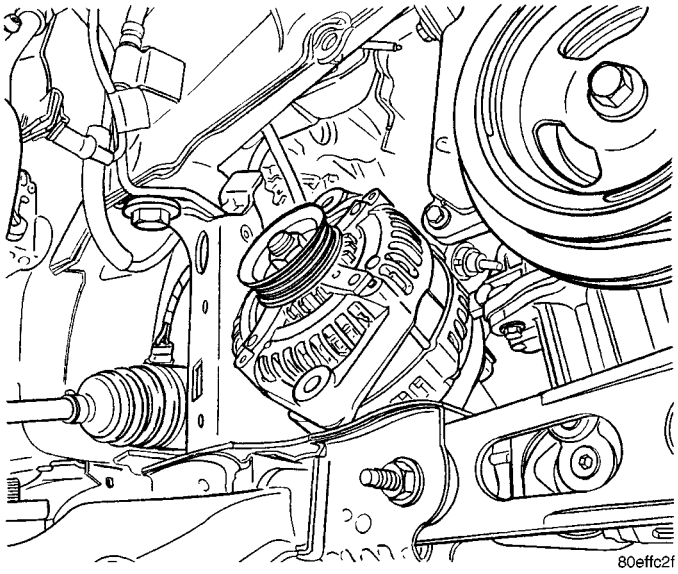

Fig. 22 GENERATOR REMOVAL/INSTALLATION

GENERATOR (Continued)

REMOVAL - 2.2 DIESEL

(1) Disconnect the negative battery cable.

(2) Remove the front grill, refer to the Body section for more information.

(3) Remove the hood seal, refer to the Body section for more information.

(4) Remove the upper radiator crossmember.

(5) Remove ambient temperature sensor.

(6) Raise vehicle and support.

(7) Drain radiator, refer to the Cooling section for more information.

(8) Disconnect the electrical connector for the radiator fan.

(9) Remove A/C refrigerant. Refer to the Air Conditioning section for more information.

(10) Remove the underbody plate (skid plate), refer to the Body section for more information.

(11) Remove the lower radiator hose and the 2 inner cooler hoses.

(12) Remove the right front tire.

(13) Remove the splash shield.

(14) Remove the accessory drive belt, refer to the Cooling section for more information.

(15) Lower vehicle.

(16) Disconnect the A/C lines from the condenser and plug and cap.

(17) Remove the upper radiator hose.

(18) Remove the radiator, condenser, and inner cooler assembly

(19) Loosen the 2 lower mounting bolts for the generator and remove the accessory drive idler pulley and bracket (Fig. 23).

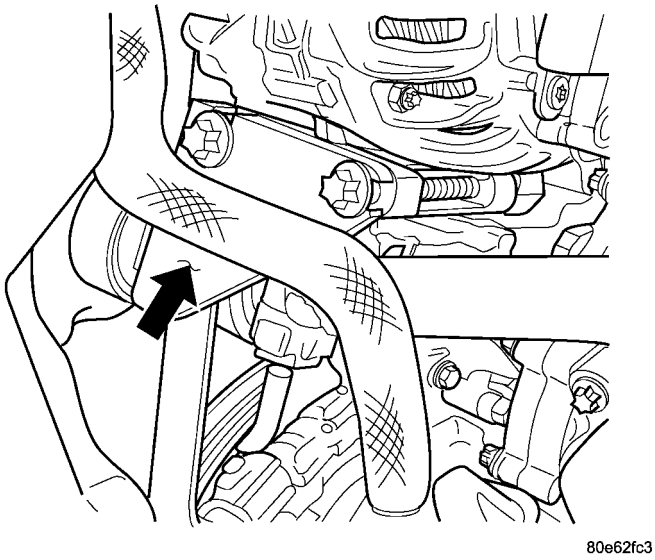

Fig. 23 IDLER PULLEY BRACKET

(20) Disconnect the wiring connectors from the back of the generator (Fig. 24).

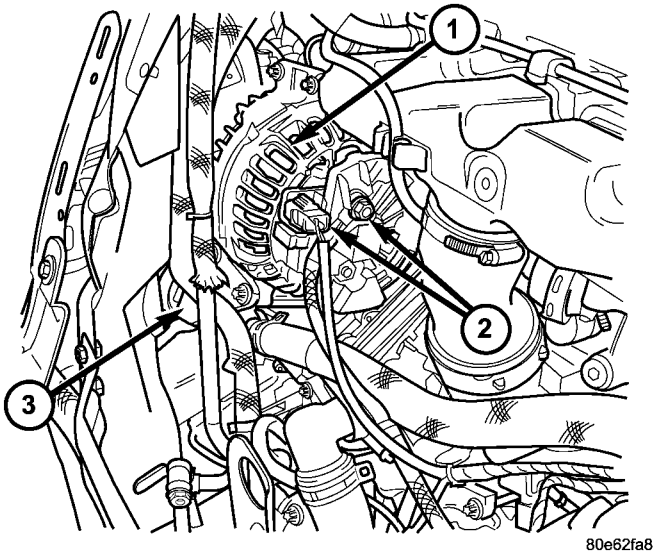

Fig. 24 GENERATOR LOCATION

1 - Generator
2 - Eletrical Connertors
3 - Idler Pulley and Bracket

NOTE: The orientation of the generator, it will fit onto the bracket backwards. If this occurs damage to the generator will happen.

(21) Remove the A/C line from the compressor.

(22) Remove the 2 upper bolts and the 2 lower bolts and remove generator as assembly.

INSTALLATION

INSTALLATION - 2.0/2.4L

(1) Install generator (Fig. 12) and loose assemble the bolt and nut (Fig. 10).

(2) Install and tension the generator belt, refer to the Cooling section for more information.

(3) Tighten the lower pivot bolt to 54 N·m (40 ft. lbs.)

(4) Install axle shaft, refer to the Axle section

(5) Install lower control arm to steering knuckle, refer to the Supension section.

(6) Install the lower ball joint nut and tighten

(7) Install the axle retaining nut and tighten, refer to the Axle section.

(8) Install the pencil strut (Fig. 9), refer to the body section.

(9) Install the B+ terminal nut and wire and tighten (Fig. 11) to 11.3 N·m (100 ins. lbs.).

(10) Plug in the field circuit to the generator

(11) Install the accessory drive splash shield (Fig. 8).

(12) Install the right front wheel.

(13) Lower vehicle.

GENERATOR (Continued)

(14) Tighten the T-bolt locknut (Fig. 7) and tighten to 54 N·m (40 ft. lbs.)

(15) Connect the negative battery cable.

(16) Install the air cleaner lid and connect the inlet air temperature sensor and makeup hose.

(17) Check the transmission fluid.

INSTALLATION - 2.4L TURBO

(1) Install generator through the axle shaft hole in wheel well (Fig. 22).

(2) Put generator on upper t-bolt and loosen install the nut (Fig. 15).

(3) Install the lower mounting bracket (Fig. 21) for the generator to the block and tighten bolts to 54 N·m (40 ft. lbs.).

(4) Loose install the lower pivot bolt for the generator (Fig. 19).

(5) Install the B+ terminal nut and wire (Fig. 17) and tighten nut to 11.3 N·m (100 in. lbs.).

(6) Plug in the field circuit to the generator.

(7) Install the axle shaft assembly (Fig. 20).

(8) Install the 2 bolts for the axle shaft bearing support and tighten bolts to 54.2 N·m (40 ft. lbs).

(9) Install the axle shaft into the steering knuckle (Fig. 20).

(10) Install the lower control arm to the steering knuckle and install the bolt and tighten bolts to 94.9 N·m (70 ft. lbs.).

(11) Install the axle retaining nut and tighten nut to 244 N·m (180 ft. lbs.).

(12) Install and tension the generator belt, refer to the Cooling section for more information.

(13) Tighten the accessory drive belt t-bolt and tighten nut to 54 N·m (40 ft. lbs.) (Fig. 15).

(14) Tighten the lower generator pivot bolt and tighten bolts to 54 N·m (40 ft. lbs.).

(15) Install the pencil strut (Fig. 18).

(16) Install the generator heat shield.

(17) Install the lower heat shield bolt and tighten bolt to 54.2 N·m (40 ft. lbs.).

(18) Install the accessory drive splash shield (Fig. 16).

(19) Install the right front wheel.

(20) Lower vehicle.

(21) Tighten nut to the upper adjustment bracket (Fig. 15) and tighten to 25 N·m (18 ft. lbs.).

(22) Install the 2 bolts to the heat shield on the generator (Fig. 14) and tighten bolts to 4.5 N·m (40 in. lbs.).

(23) Connect the negative battery cable.

INSTALLATION - 2.2 DIESEL

NOTE: The orientation of the generator (Fig. 25), it will fit onto the bracket backwards. If this occurs damage to the generator will happen.

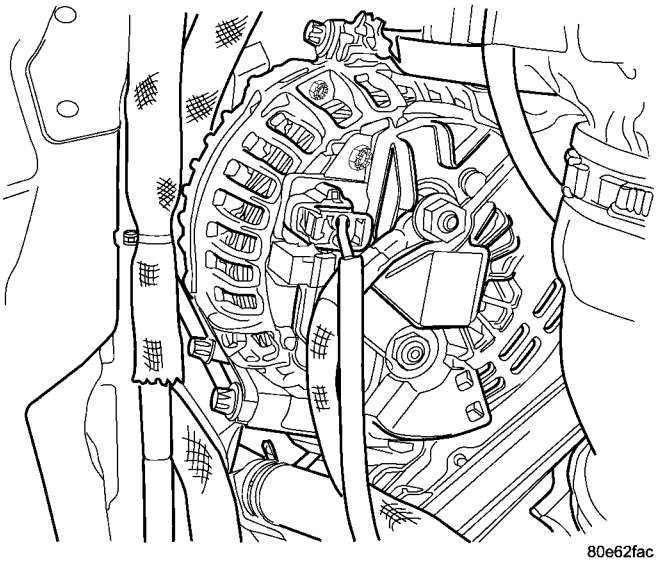

Fig. 25 GENERATOR ORIENTATION

(1) Install the 2 upper bolts and the 2 lower bolts into the generator.

(2) Install generator as assembly (Fig. 25) **MAKE SURE OF ORIENTATION OF GENERATOR**.

(3) Install the accessory drive idler pulley and bracket to the 2 lower mounting bolts for the generator (Fig. 23).

(4) Tighten generator mounting bolts to 28 N·m (38 ft. lbs.)

(5) Connect the wiring connectors to the back of the generator (Fig. 24).

(6) Connect the battery cable to the generator.

(7) Install the A/C line to the compressor.

(8) Install the radiator, condenser, and inner cooler assembly

(9) Connect the electrical connector to the radiator fan.

(10) Install the upper radiator hose.

(11) Connect the A/C line to the condenser.

(12) Raise vehicle and support.

(13) Install the accessory drive belt, refer to the Cooling section for more information.

(14) Install the splash shield.

(15) Install the right front tire.

(16) Install the lower radiator hose and the 2 inner cooler hoses.

GENERATOR (Continued)

(17) Install the underbody plate (skid plate), refer to the Body section for more information.
(18) Lower vehicle.
(19) Install ambient temperature sensor.
(20) Install the upper radiator crossmember.
(21) Install the hood seal, refer to the Body section for more information.
(22) Install the front grill, refer to the Body section for more information.
(23) Connect the negative battery cable.
(24) Fill radiator, refer to the Cooling section for more information.
(25) Install A/C refrigerant. Refer to the Air Conditioning section for more information.

VOLTAGE REGULATOR

DESCRIPTION

The Electronic Voltage Regulator (EVR) is not a separate component. It is actually a voltage regulating circuit located within the Powertrain Control Module (PCM). The EVR is not serviced separately. If replacement is necessary, the PCM must be replaced.

OPERATION

The amount of DC current produced by the generator is controlled by EVR circuitry contained within the PCM. This circuitry is connected in series with the generators second rotor field terminal and its ground.

Voltage is regulated by cycling the ground path on SBEC vehicles or the power side on the NGC vehicles, to control the strength of the rotor magnetic field. The EVR circuitry monitors system line voltage at the PDC and calculated battery temperature or inlet air temperature sensor (refer to Inlet Air Temperature Sensor, if equipped, for more information). It then determines a target charging voltage. If sensed battery voltage is lower than the target voltage, the PCM feeds the field winding until sensed battery voltage is at the target voltage. A circuit in the PCM cycles the feed side of the generator field at 250 times per second (250Hz), but has the capability to feed the field control wire 100% of the time (full field) to achieve the target voltage. If the charging rate cannot be monitored (limp-in), a duty cycle of 20% is used by the PCM in order to have some generator output. Also refer to Charging System Operation for additional information.

STARTING

TABLE OF CONTENTS

page

STARTING
DESCRIPTION 34
OPERATION 34
DIAGNOSIS AND TESTING
DIAGNOSIS AND TESTING - STARTING SYSTEM TEST 34
DIAGNOSIS AND TESTING - CONTROL CIRCUIT TEST 36
DIAGNOSIS AND TESTING - FEED CIRCUIT RESISTANCE TEST 38
DIAGNOSIS AND TESTING - FEED CIRCUIT TEST 39
SPECIFICATIONS
STARTER MOTOR 39
TORQUE 40
STARTER MOTOR
REMOVAL
REMOVAL - 1.6L 40
REMOVAL - 2.2 DIESEL 41
REMOVAL - 2.0/2.4L 42
REMOVAL - STARTER 2.4L TURBO 42
INSTALLATION
INSTALLATION - 1.6L 44
INSTALLATION - 2.2L DIESEL 44
INSTALLATION - 2.0/2.4L 45
INSTALLATION - STARTER 2.4L TURBO 45

STARTING

DESCRIPTION

The starting system consists of:

- Starter relay
- Starter motor (including an integral starter solenoid)

Other components to be considered as part of starting system are:

- Battery
- Battery cables
- Ignition switch and key lock cylinder
- Clutch pedal position switch (manual transmission)
- Park/neutral position switch (automatic transmission)
- Wire harnesses and connections.

The Battery, Starting, and Charging systems operate in conjunction with one another, and must be tested as a complete system. For correct operation of starting/charging systems, all components used in these 3 systems must perform within specifications. When attempting to diagnose any of these systems, it is important that you keep their interdependency in mind.

The diagnostic procedures used in each of these groups include the most basic conventional diagnostic methods, to the more sophisticated On-Board Diagnostics (OBD) built into the Powertrain Control Module (PCM). Use of an induction-type milliampere ammeter, volt/ohmmeter, battery charger, carbon pile rheostat (load tester), and 12-volt test lamp may be required.

OPERATION

These components form two separate circuits. A high amperage circuit that feeds the starter motor up to 300+ amps, and a control circuit that operates on less than 20 amps.

The PCM controls a double start over-ride safety that does not allow the starter to be engaged if the engine is already running.

DIAGNOSIS AND TESTING

DIAGNOSIS AND TESTING - STARTING SYSTEM TEST

For circuit descriptions and diagrams, refer to the Wiring Diagrams.

WARNING: ON VEHICLES EQUIPPED WITH AIRBAGS, REFER TO THE PASSIVE RESTRAINT SYSTEMS BEFORE ATTEMPTING STEERING WHEEL, STEERING COLUMN, OR INSTRUMENT PANEL COMPONENT DIAGNOSIS OR SERVICE. FAILURE TO TAKE THE PROPER PRECAUTIONS COULD RESULT IN ACCIDENTAL AIRBAG DEPLOYMENT AND POSSIBLE PERSONAL INJURY.

INSPECTION

Before removing any unit from the starting system for repair or diagnosis, perform the following inspections:

- **Battery** - Visually inspect the battery for indications of physical damage and loose or corroded cable connections. Determine the state-of-charge and

STARTING (Continued)

cranking capacity of the battery. Charge or replace the battery, if required. Refer to the Battery section for more information.

- **Ignition Switch** - Visually inspect the ignition switch for indications of physical damage and loose or corroded wire harness connections.
- **Transmission Range Sensor or Park/Neutral Switch** - Visually inspect the transmission range sensor for indications of physical damage and loose or corroded wire harness connections.
- **Starter Relay** - Visually inspect the starter relay for indications of physical damage and loose or corroded wire harness connections.
- **Starter Motor** - Visually inspect the starter motor for indications of physical damage and loose or corroded wire harness connections.
- **Starter Solenoid** - Visually inspect the starter solenoid for indications of physical damage and loose or corroded wire harness connections.
- **Wiring** - Visually inspect the wire harness for damage. Repair or replace any faulty wiring, as required. Check for loose or corroded wire harness connections at main engine ground and remote jump post.
- **Power Distribution Center (PDC)** - Visually inspect the B+ connections at the PDC for physical damage and loose or corroded harness connections.

STARTING SYSTEM DIAGNOSIS

CONDITION	POSSIBLE CAUSE	CORRECTION
STARTER FAILS TO ENGAGE.	1. BATTERY DISCHARGED OR FAULTY.	1. REFER TO THE BATTERY SECTION FOR MORE INFORMATION. CHARGE OR REPLACE BATTERY, IF REQUIRED.
	2. STARTING CIRCUIT WIRING FAULTY.	2. REFER TO FEED CIRCUIT RESISTANCE TEST AND FEED CIRCUIT TEST IN THIS SECTION.
	3. STARTER RELAY FAULTY.	3. REFER TO RELAY TEST, IN THIS SECTION. REPLACE RELAY, IF NECESSARY.
	4. IGNITION SWITCH FAULTY.	4. REFER TO IGNITION SWITCH TEST, IN THE STEERING SECTION OR 8 WIRING DIAGRAMS. REPLACE SWITCH, IF NECESSARY.
	5. PARK/NEUTRAL POSITION SWITCH (AUTO TRANS) FAULTY OR MIS-ADJUSTED.	5. REFER PARK/NEUTRAL POSITION SWITCH TEST, IN THE TRANSAXLE. SECTION FOR MORE INFORMATION. REPLACE SWITCH, IF NECESSARY.
	6. CLUTCH INTERLOCK SWITCH (MAN TRANS) FAULTY.	6. REFER TO CLUTCH PEDAL POSITION SWITCH TEST, IN THE CLUTCH. SECTION. REPLACE SWITCH, IF NECESSARY.
	7. STARTER SOLENOID FAULTY.	7. REFER TO SOLENOID TEST, IN THIS SECTION. REPLACE STARTER ASSEMBLY, IF NECESSARY.
	8. STARTER ASSEMBLY FAULTY.	8. IF ALL OTHER STARTING SYSTEM COMPONENTS AND CIRCUITS CHECK OK, REPLACE STARTER ASSEMBLY.
	9. FAULTY TEETH ON RING GEAR.	9. ROTATE FLYWHEEL 360°, AND INSPECT TEETH AND RING GEAR REPLACED IF DAMAGED.
	10. PCM DOUBLE START OVERRIDE OUTPUT FAILURE.	10. REFER TO PCM DIAGNOSTIC. CHECK FOR CONTINUITY BETWEEN PCM AND TERMINAL 85. REPAIR OPEN CIRCUIT AS REQUIRED. IF OK, PCM MAY BE DEFECTIVE.
STARTER ENGAGES, FAILS TO TURN ENGINE.	1. BATTERY DISCHARGED OR FAULTY.	1. REFER TO THE BATTERY SECTION FOR MORE INFORMATION. CHARGE OR REPLACE BATTERY AS NECESSARY.

STARTING (Continued)

CONDITION	POSSIBLE CAUSE	CORRECTION
	2. STARTING CIRCUIT WIRING FAULTY.	2. REFER TO THE FEED CIRCUIT RESISTANCE TEST AND THE FEED CIRCUIT TEST IN THIS SECTION. REPAIR AS NECESSARY.
	3. STARTER ASSEMBLY FAULTY.	3. IF ALL OTHER STARTING SYSTEM COMPONENTS AND CIRCUITS CHECK OK, REPLACE STARTER ASSEMBLY.
	4. ENGINE SEIZED.	4. REFER TO THE ENGINE SECTION, FOR DIAGNOSTIC AND SERVICE PROCEDURES.
	5. LOOSE CONNECTION AT BATTERY, PDC, STARTER, OR ENGINE GROUND.	5. INSPECT FOR LOOSE CONNECTIONS.
	6. FAULTY TEETH ON RING GEAR.	6. ROTATE FLYWHEEL 360°, AND INSPECT TEETH AND RING GEAR REPLACED IF DAMAGED.
STARTER ENGAGES, SPINS OUT BEFORE ENGINE STARTS.	1. BROKEN TEETH ON STARTER RING GEAR.	1. REMOVE STARTER. INSPECT RING GEAR AND REPLACE IF NECESSARY.
	2. STARTER ASSEMBLY FAULTY.	2. IF ALL OTHER STARTING SYSTEM COMPONENTS AND CIRCUITS CHECK OK, REPLACE STARTER ASSEMBLY.
STARTER DOES NOT DISENGAGE.	1. STARTER IMPROPERLY INSTALLED.	1. INSTALL STARTER. TIGHTEN STARTER MOUNTING HARDWARE TO CORRECT TORQUE SPECIFICATIONS.
	2. STARTER RELAY FAULTY.	2. REFER TO RELAY TEST, IN THIS SECTION. REPLACE RELAY, IF NECESSARY.
	3. IGNITION SWITCH FAULTY.	3. REFER TO IGNITION SWITCH TEST, IN THE STEERING SECTION. REPLACE SWITCH, IF NECESSARY.
	4. STARTER ASSEMBLY FAULTY.	4. IF ALL OTHER STARTING SYSTEM COMPONENTS AND CIRCUITS CHECK OK, REPLACE STARTER ASSEMBLY.
	5. FAULTY TEETH ON RING GEAR.	5. ROTATE FLYWHEEL 360°, AND INSPECT TEETH AND RING GEAR REPLACED IF DAMAGED.

DIAGNOSIS AND TESTING - CONTROL CIRCUIT TEST

The starter control circuit has:

- Starter motor with integral solenoid
- Starter relay
- Transmission range sensor, or Park/Neutral Position switch with automatic transmissions
- Ignition switch
- Battery
- All related wiring and connections
- Powertrain Control Module (PCM)

CAUTION: Before performing any starter tests, the ignition and fuel systems must be disabled.

- To disable ignition and fuel systems, disconnect the Automatic Shutdown Relay (ASD). The ASD relay is located in the Power Distribution Center (PDC). Refer to the PDC cover for the proper relay location.

STARTER SOLENOID

WARNING: CHECK TO ENSURE THAT THE TRANSMISSION IS IN THE PARK POSITION WITH THE PARKING BRAKE APPLIED.

(1) Verify battery condition. Battery must be in good condition with a full charge before performing any starter tests. Refer to Battery Tests.

(2) Perform Starter Solenoid test BEFORE performing the starter relay test.

STARTING (Continued)

(3) Perform a visual inspection of the starter/starter solenoid for corrosion, loose connections or faulty wiring.

(4) Locate and remove the starter relay from the Power Distribution Center (PDC). Refer to the PDC label for relay identification and location.

(5) Connect a remote starter switch or a jumper wire between the remote battery positive post and terminal 87 of the starter relay connector.

(a) If engine cranks, starter/starter solenoid is good. Go to the Starter Relay Test.

(b) If engine does not crank or solenoid chatters, check wiring and connectors from starter relay to starter solenoid and from the battery positive terminal to starter post for loose or corroded connections. Particularly at starter terminals.

(c) Repeat test. If engine still fails to crank properly, trouble is within starter or starter mounted solenoid, and replace starter. Inspect the ring gear teeth.

STARTER RELAY

WARNING: CHECK TO ENSURE THAT THE TRANSMISSION IS IN THE PARK/NEUTRAL POSITION WITH THE PARKING BRAKE APPLIED.

RELAY TEST

The starter relay is located in the Power Distribution Center (PDC) in the engine compartment. Refer to the PDC label for relay identification and location.

Remove the starter relay from the PDC as described in this group to perform the following tests:

(1) A relay in the de-energized position should have continuity between terminals 87A and 30, and no continuity between terminals 87 and 30. If OK, go to Step 2. If not OK, replace the faulty relay.

(2) Resistance between terminals 85 and 86 (electromagnet) should be 75 ±5 ohms. If OK, go to Step 3. If not OK, replace the faulty relay.

(3) Connect a battery B+ lead to terminals 85 and a ground lead to terminal 86 to energize the relay. The relay should click. Also test for continuity between terminals 30 and 87, and no continuity between terminals 87A and 30. If OK, refer to Relay Circuit Test procedure. If not OK, replace the faulty relay.

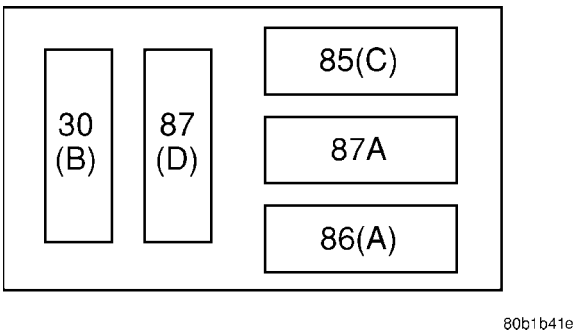

Starter Relay Pinout

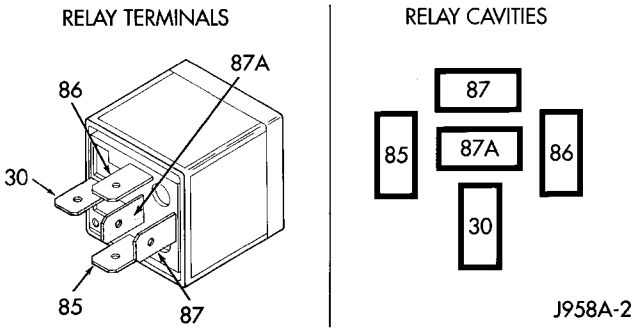

Starter Relay Pinout

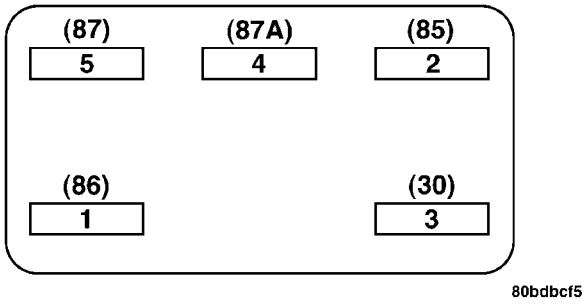

Starter Relay Pinout

CAV	FUNCTION
30	B (+)
85	IGNITION SWITCH OUTPUT
86	PCM-CONTROLLED GROUND
87	STARTER RELAY OUTPUT
87A	NO CONNECT

STARTING (Continued)

RELAY CIRCUIT TEST

(1) The relay common feed terminal cavity (30) is connected to battery voltage and should be hot at all times. If OK, go to Step 2. If not OK, repair the open circuit to the PDC fuse as required.

(2) The relay normally closed terminal (87A) is connected to terminal 30 in the de-energized position, but is not used for this application. Go to Step 3.

(3) The relay normally open terminal (87) is connected to the common feed terminal (30) in the energized position. This terminal supplies battery voltage to the starter solenoid field coils. There should be continuity between the cavity for relay terminal 87 and the starter solenoid terminal at all times. If OK, go to Step 4. If not OK, repair the open circuit to the starter solenoid as required.

(4) The coil battery terminal (85) is connected to the electromagnet in the relay. It is energized when the ignition switch is held in the Start position and the clutch pedal is depressed (manual trans). Check for battery voltage at the cavity for relay terminal 86 with the ignition switch in the Start position and the clutch pedal is depressed (manual trans), and no voltage when the ignition switch is released to the On position. If OK, go to Step 5. If not OK, check for an open or short circuit to the ignition switch and repair, if required. If the circuit to the ignition switch is OK, see the Ignition Switch Test procedure in this group.

(5) The coil ground terminal (86) is connected to the electromagnet in the relay. It is grounded by the PCM if the conditions are right to start the car. For automatic trans. cars the PCM must see Park Neutral switch low and near zero engine speed (rpm). For manual trans. cars the PCM only needs to see near zero engine speed (rpm) and low clutch interlock input and see near zero engine speed (rpm). To diagnose the Park Neutral switch of the trans range sensor refer to the transaxle section. Check for continuity to ground while the ignition switch is in the start position and if equipped the clutch pedal depressed. If not OK and the vehicle has an automatic trans. verify Park Neutral switch operation. If that checks OK check for continuity between PCM and the terminal 86. Repair open circuit as required. Also check the clutch interlock switch operation if equipped with a manual transmission. If OK, the PCM may be defective.

SAFETY SWITCHES

For diagnostics of the Transmission Range Sensor, refer to the Transaxle section for more information.

If equipped with Clutch Interlock/Upstop Switch, refer to Diagnosis and Testing in the Clutch section.

IGNITION SWITCH

After testing starter solenoid and relay, test ignition switch and wiring. Refer to the Ignition Section or Wiring Diagrams for more information. Check all wiring for opens or shorts, and all connectors for being loose or corroded.

BATTERY

For battery diagnosis and testing, refer to the Battery section for procedures.

ALL RELATED WIRING AND CONNECTORS

Refer to Wiring Diagrams for more information.

DIAGNOSIS AND TESTING - FEED CIRCUIT RESISTANCE TEST

Before proceeding with this operation, review Diagnostic Preparation and Starter Feed Circuit Tests. The following operation will require a voltmeter, accurate to 1/10 of a volt.

CAUTION: Ignition and Fuel systems must be disabled to prevent engine start while performing the following tests.

(1) To disable the Ignition and Fuel systems, disconnect the Automatic Shutdown Relay (ASD). The ASD relay is located in the Power Distribution Center (PDC). Refer to the PDC cover for proper relay location.

(2) Gain access to battery terminals.

(3) With all wiring harnesses and components properly connected, perform the following:

(a) Connect the negative lead of the voltmeter to the battery negative post, and positive lead to the battery negative cable clamp. Rotate and hold the ignition switch in the START position. Observe the voltmeter. If voltage is detected, correct poor contact between cable clamp and post.

(b) Connect positive lead of the voltmeter to the battery positive post, and negative lead to the battery positive cable clamp. Rotate and hold the ignition switch key in the START position. Observe the voltmeter. If voltage is detected, correct poor contact between the cable clamp and post.

(c) Connect negative lead of voltmeter to battery negative terminal, and positive lead to engine block near the battery cable attaching point. Rotate and hold the ignition switch in the START position. If voltage reads above 0.2 volt, correct poor contact at ground cable attaching point. If voltage reading is still above 0.2 volt after correcting poor contacts, replace ground cable.

(4) Connect positive voltmeter lead to the starter motor housing and the negative lead to the battery negative terminal. Hold the ignition switch key in

STARTING (Continued)

the START position. If voltage reads above 0.2 volt, correct poor starter to engine ground.

(a) Connect the positive voltmeter lead to the battery positive terminal, and negative lead to battery cable terminal on starter solenoid. Rotate and hold the ignition switch in the START position. If voltage reads above 0.2 volt, correct poor contact at battery cable to solenoid connection. If reading is still above 0.2 volt after correcting poor contacts, replace battery positive cable.

(b) If resistance tests do not detect feed circuit failures, replace the starter motor.

DIAGNOSIS AND TESTING - FEED CIRCUIT TEST

NOTE: The following results are based upon the vehicle being at room temperature.

The following procedure will require a suitable volt-ampere tester (Fig. 1).

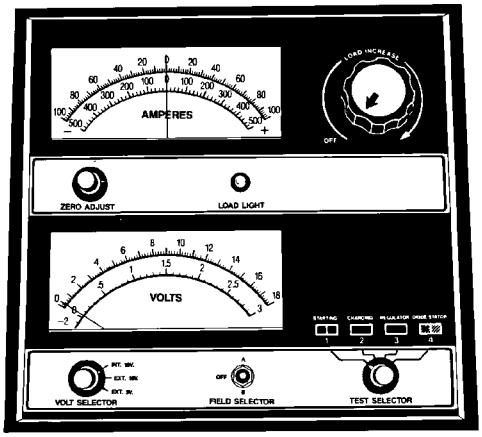

Fig. 1 Volt Ampere Tester

CAUTION: Before performing any starter tests, the ignition and fuel systems must be disabled.

(1) Check battery before performing this test. Battery must be fully charged.

(2) Connect a volt-ampere tester to the battery terminals. Refer to the operating instructions provided with the tester being used.

(3) To disable the ignition and fuel systems, disconnect the Automatic Shutdown Relay (ASD). The ASD relay is located in the Power Distribution Center (PDC). Refer to the PDC cover for proper relay location.

(4) Verify that all lights and accessories are OFF, and the transmission shift selector is in the PARK and SET parking brake.

CAUTION: Do not overheat the starter motor or draw the battery voltage below 9.6 volts during cranking operations.

(5) Rotate and hold the ignition switch in the START position. Observe the volt-ampere tester (Fig. 1).

- If voltage reads above 9.6 volts, and amperage draw reads above 280 amps, check for engine seizing or faulty starter.
- If voltage reads 12.4 volts or greater and amperage reads 0 to 10 amps, check for corroded cables and/or bad connections.
- Voltage below 9.6 volts and amperage draw above 300 amps, the problem is the starter. Replace the starter refer to starter removal.

(6) After the starting system problems have been corrected, verify the battery state-of-charge and charge battery if necessary. Disconnect all testing equipment and connect ASD relay. Start the vehicle several times to assure the problem has been corrected.

SPECIFICATIONS

STARTER MOTOR

ENGINE APPLICATION	2.4L DOHC
POWER RATING	1.2 KW
VOLTAGE	12 VOLTS
NUMBER OF FIELDS	6
NUMBER OF POLES	6
BRUSHES	4
DRIVE	PLANETARY GEAR TRAIN
CRANKING AMPERAGE DRAW TEST	150 - 280 AMPS.

NOTE: Engine should be up to operating temperature. Extremely heavy oil or tight engine will increase starter amperage draw.

STARTING (Continued)

TORQUE

DESCRIPTION	N·m	Ft. Lbs.	In. Lbs.
Starter Mounting Bolts	54	40	
Starter Solenoid Battery Nut	10		90

STARTER MOTOR

REMOVAL

REMOVAL - 1.6L

(1) Turn wheels to the left.
(2) Remove air cleaner cover.
(3) Disconnect the negative battery cable.
(4) Raise vehicle and support.
(5) Remove the exhaust manifold support bracket (Fig. 2).

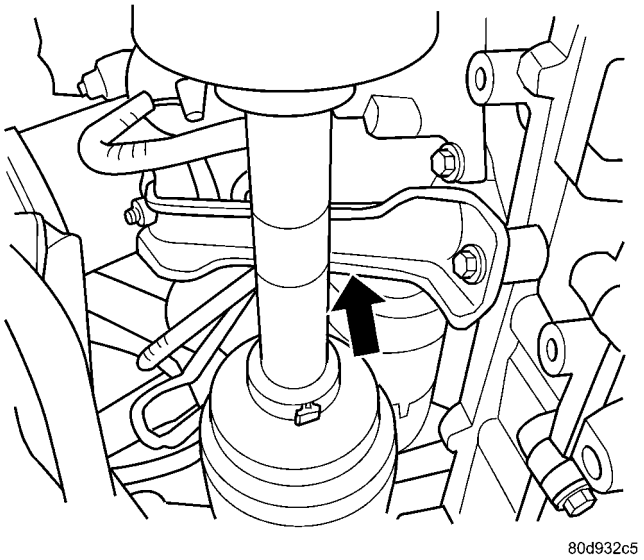

Fig. 2 EXHAUST BRACKET

(6) Disconnect the battery cable (Fig. 4) and solenoid electrical connectors (Fig. 3) from the starter.

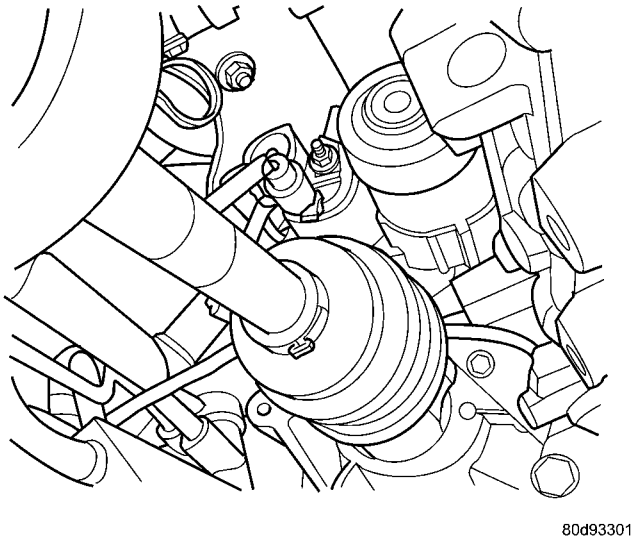

Fig. 3 ELECTRICAL CONNECTIONS

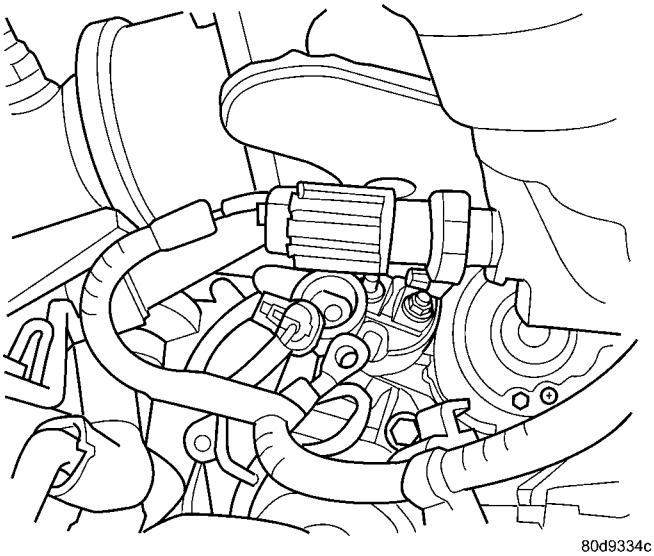

Fig. 4 ELECTRICAL CONNECTIONS REMOVED

STARTER MOTOR (Continued)

(7) Push up the spring clip that holds the heat shield for the starter (Fig. 5).

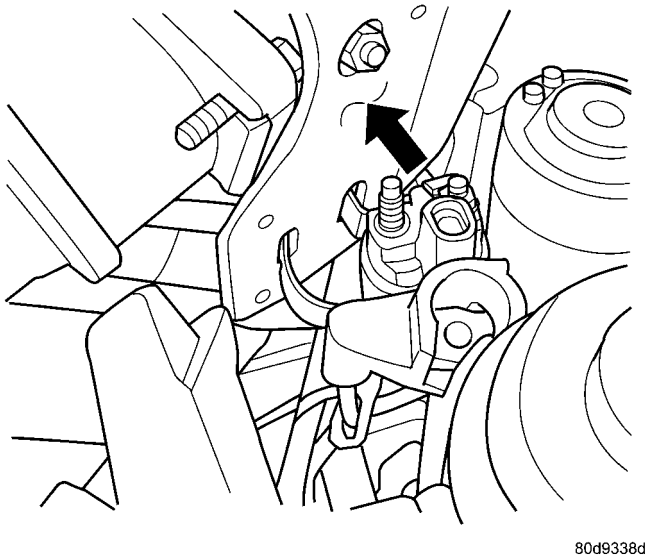

Fig. 5 STARTER HEAT SHIELD

(8) Remove the upper mounting bolts first.

(9) Remove the lower mounting bolt.

(10) Remove the starter through the wheel well (Fig. 6).

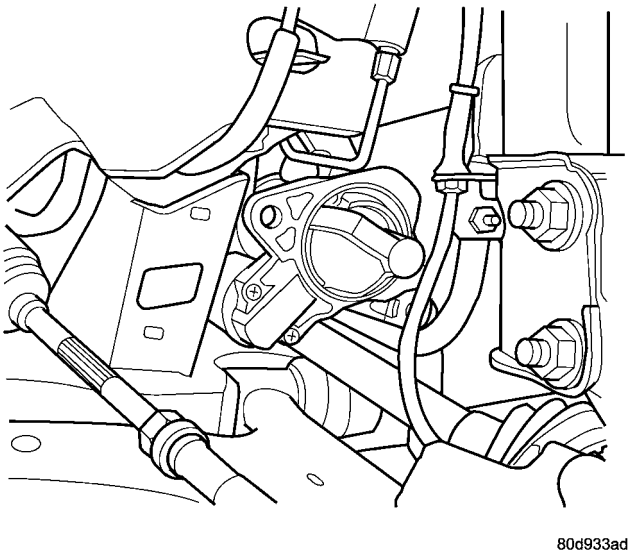

Fig. 6 STARTER REMOVAL

REMOVAL - 2.2 DIESEL

(1) Disconnect the negative battery cable.

(2) Remove the front grill, refer to the Body section for more information.

(3) Remove the hood seal, refer to the Body section for more information.

(4) Remove the upper radiator crossmember.

(5) Remove ambient temperature sensor.

(6) Raise vehicle and support.

(7) Drain radiator, refer to the Cooling section for more information.

(8) Disconnect the electrical connector for the radiator fan.

(9) Remove the underbody plate (skid plate), refer to the Body section for more information.

(10) Remove the lower radiator hose.

(11) Remove the 2 lower bolts for the inner cooler mounting to radiator.

(12) Lower vehicle.

(13) Remove the upper radiator hose.

(14) Remove the 4 upper bolts for the inner cooler mounting to radiator.

(15) Remove inner cooler from radiator by lifting the inner cooler up off of the 2 lower mounting tabs (Fig. 7)and push it toward the front of vehicle. These tabs are on the bottom of the inner cooler and lock into the bottom of the radiator.

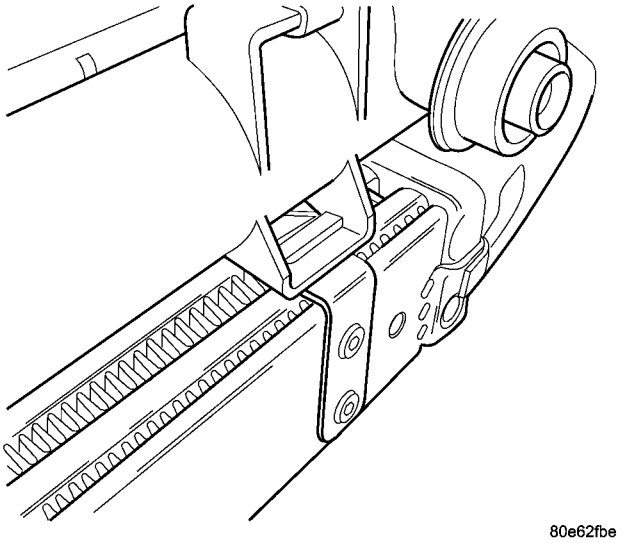

Fig. 7 MOUNTING TABS

STARTER MOTOR (Continued)

(16) Remove the radiator from vehicle (Fig. 8).

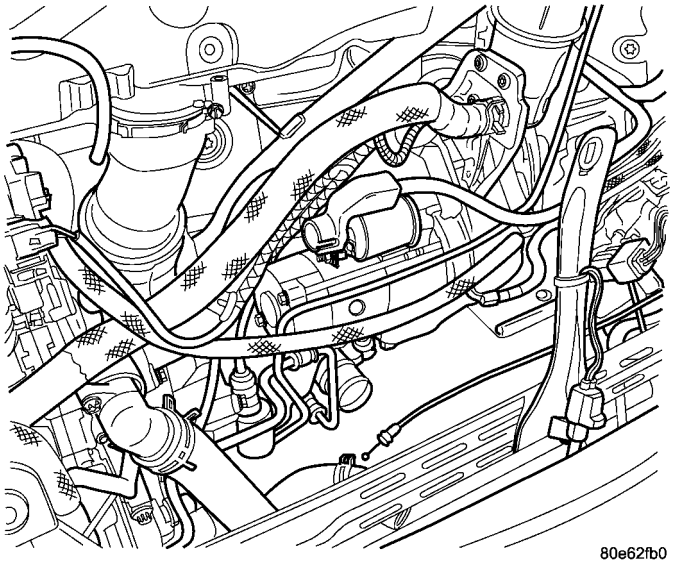

Fig. 8 STARTER LOCATION

(17) Disconnect the electrical connectors from the starter (Fig. 9).

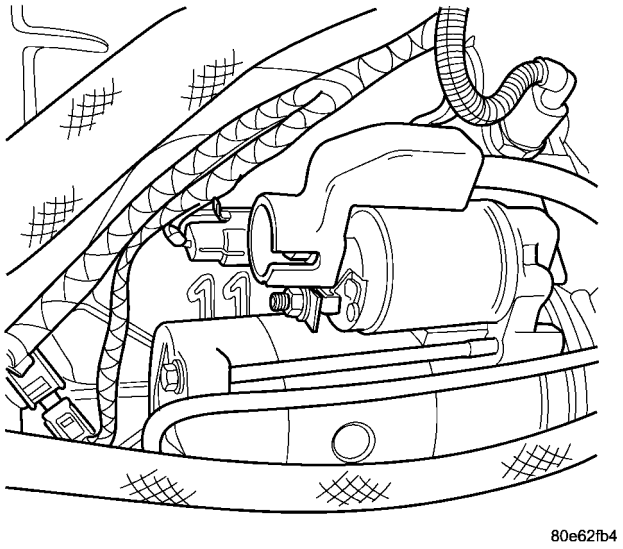

Fig. 9 ELECTRICAL CONNECTIONS

(18) Disconnect the battery cable from the starter.

(19) Remove the lower mounting bolt and ground cable.

(20) Remove the upper mounting bolt.

(21) Remove starter.

REMOVAL - 2.0/2.4L

(1) Open Hood.

(2) Remove air cleaner box cover. Refer to Fuel Delivery, Removal and Installation, Air Cleaner Box.

(3) Disconnect and isolate the battery negative cable (Fig. 10).

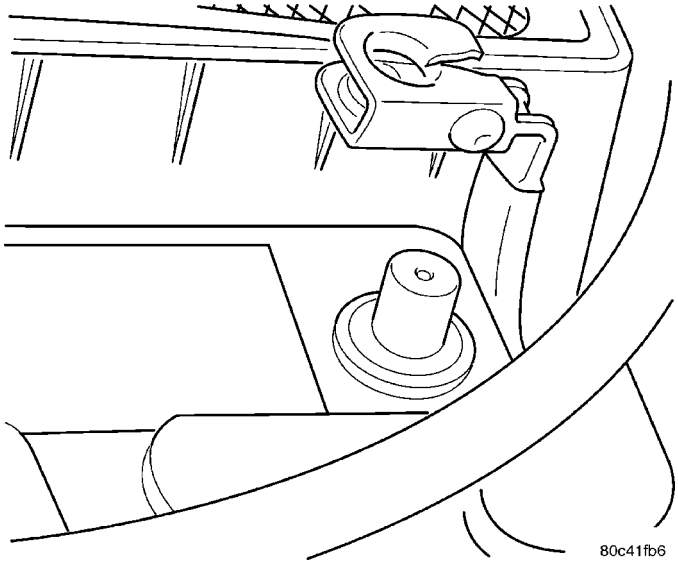

Fig. 10 Battery Negative Cable Remove/Install

(4) Raise vehicle on hoist.

(5) Remove Engine Structural Collar. Refer to Engine, Structural Collar Removal and Installation.

(6) Disconnect starter motor wiring (Fig. 11).

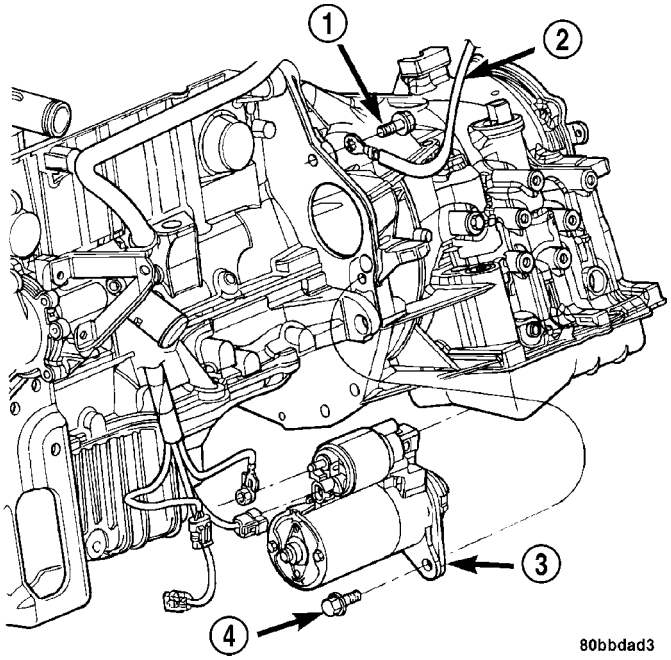

Fig. 11 Starter Remove/Install

1 - BOLT
2 - GROUND
3 - STARTER
4 - BOLT

(7) Remove starter motor mounting bolts (Fig. 11).

(8) Remove starter motor from vehicle.

REMOVAL - STARTER 2.4L TURBO

(1) Disconnect the negative battery cable.

(2) Remove the air cleaner box.

STARTER MOTOR (Continued)

(3) Pushing the inner cooler hose up and out of the way and remove the upper starter bolt (Fig. 12) and ground wire.

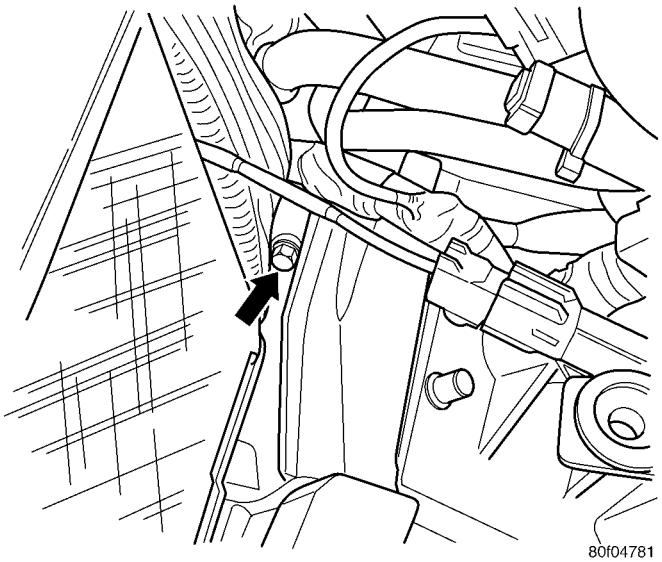

Fig. 12 UPPER STARTER BOLT - 2.4L TURBO

(4) Raise vehicle and support

(5) Remove the inner cooler lower hose from the inner cooler (Fig. 13).

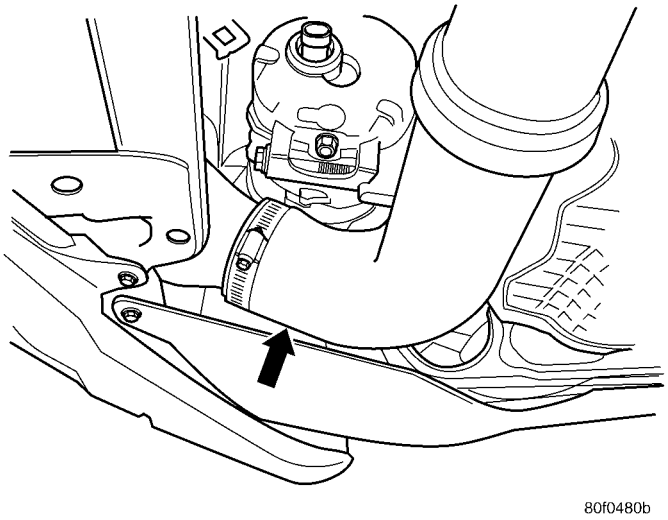

Fig. 13 INNER COOLER LOWER MOUNTING - 2.4L TURBO

(6) Remove the nuts that hold the lower inner cooler tube (Fig. 14).

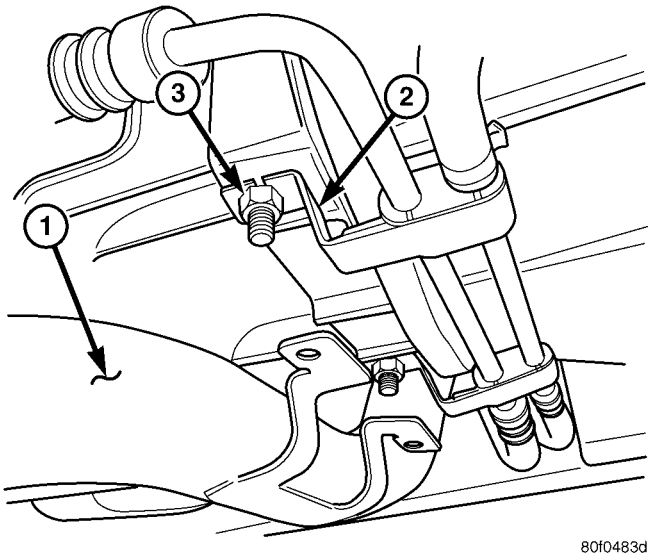

Fig. 14 INNER COOLER LOWER TUBE MOUNTING - 2.4L TURBO

1 - Lower Inner Cooler Tube
2 - Power Steering Line Brackets
3 - Studs

(7) Remove the studs that hold the power steering lines (Fig. 14).

(8) Loosen and relocate the power steering lines (Fig. 15).

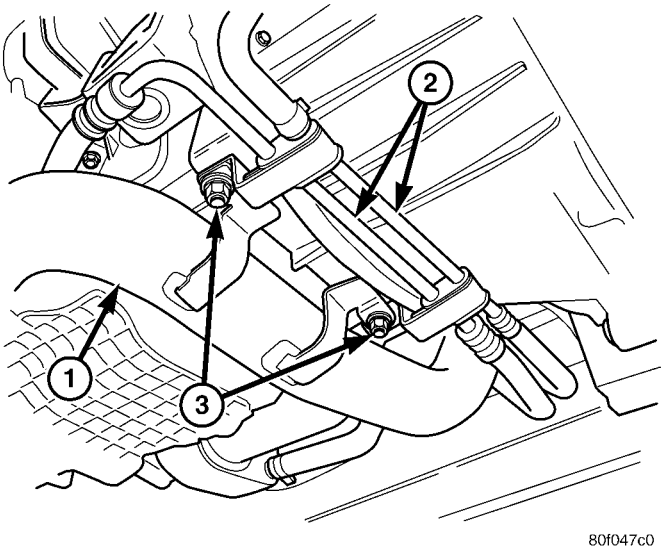

Fig. 15 POWER STEERING LINE MOUNTING - 2.4L TURBO

1 - Lower Inner Cooler Tube
2 - Power Steering Lines
3 - Mounting Studs

STARTER MOTOR (Continued)

(9) Remove the Structural Collar (Fig. 16), refer to the Engine, Structural Collar Removal and Installation section.

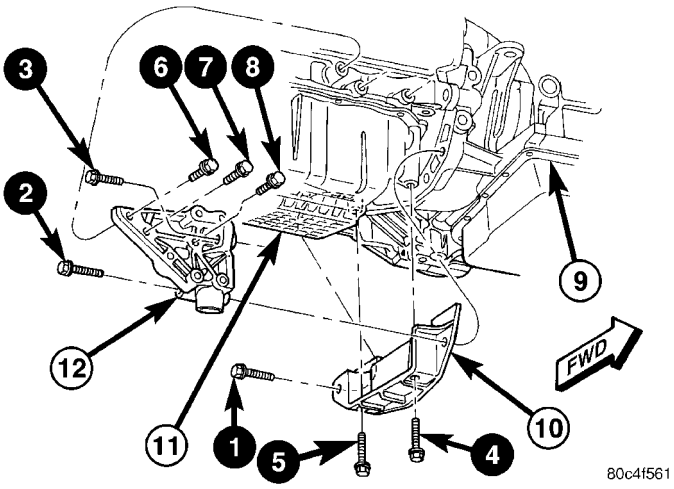

Fig. 16 Structural Collar and Bending Strut— (Automatic Transaxle Equipped)

1–8 – BOLT TIGHTENING SEQUENCE
9 – TRANSAXLE
10 – COLLAR
11 – OIL PAN
12 – STRUT

(10) Unlock and disconnect the solenoid electrical connector.

(11) Disconnect and remove the positive battery cable.

(12) Remove the lower starter bolt.

(13) Remove starter (Fig. 17).

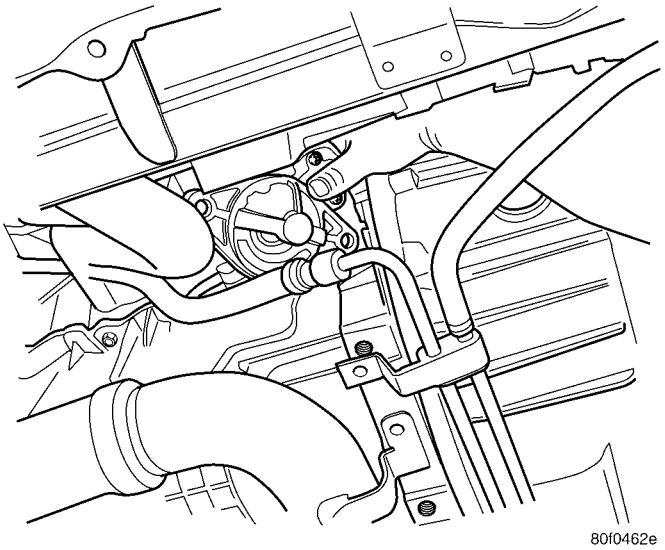

Fig. 17 STARTER REMOVAL/INSTALLATION - 2.4L TURBO

INSTALLATION

INSTALLATION - 1.6L

(1) Install the starter through the wheel well (Fig. 6).

(2) Install the lower mounting bolt.

(3) Install the upper mounting bolts.

(4) Push the spring clip that holds the heat shield for the starter back on the starter solenoid (Fig. 5).

(5) Connect the battery cable (Fig. 4) and solenoid electrical connectors (Fig. 3) to the starter.

(6) Install the exhaust manifold support bracket (Fig. 2).

(7) Lower vehicle.

(8) Connect the negative battery cable.

(9) Install air cleaner cover.

INSTALLATION - 2.2L DIESEL

(1) Install starter (Fig. 8).

(2) Install the upper mounting bolt.

(3) Install the lower mounting bolt and ground cable.

(4) Connect the battery cable to the starter (Fig. 9).

(5) Connect the electrical connectors to the starter (Fig. 9).

(6) Install the radiator to vehicle.

(7) Install radiator to inner cooler, make sure the 2 lower mounting tabs (Fig. 7) lock into the radiator brackets. These tabs are on the bottom of the inner cooler and lock into the bottom of the radiator.

(8) Install the 4 upper bolts for the inner cooler mounting to radiator.

(9) Connect the electrical connector for the radiator fan.

(10) Install the upper radiator hose.

(11) Raise vehicle and support.

(12) Install the 2 lower bolts for the inner cooler mounting to radiator.

(13) Install the lower radiator hose.

(14) Install the underbody plate (skid plate), refer to the Body section for more information.

(15) Lower vehicle.

(16) Install ambient temperature sensor.

(17) Install the upper radiator crossmember.

(18) Install the hood seal, refer to the Body section for more information.

(19) Install the front grill, refer to the Body section for more information.

(20) Connect the negative battery cable.

(21) Fill radiator, refer to the Cooling section for more information.

STARTER MOTOR (Continued)

INSTALLATION - 2.0/2.4L

(1) Reinstall starter motor into vehicle lower engine compartment.

(2) Install starter motor mounting bolts and torque to 54 N·m (40 ft. lbs.).

(3) Connect starter motor wiring. Torque solenoid battery cable nut to 10 N·m (90 in. lbs.).

(4) Install Engine Structural Collar. Refer to Engine, Structural Collar Removal and Installation.

CAUTION:
The torque procedure for the structural collar must be followed, as damage to the oil pan or collar could occur.

(5) Lower vehicle from hoist.
(6) Reconnect battery negative cable.
(7) Reinstall air cleaner box cover.
(8) Verify operation of vehicle and systems.
(9) Close hood and remove from hoist.

INSTALLATION - STARTER 2.4L TURBO

(1) Install starter (Fig. 17).

(2) Install the lower starter bolt and tighten bolt to 54 N·m (40 ft. lbs.).

(3) Connect the positive battery cable and tighten nut to 10 N·m (90 in. lbs.).

(4) Connect and lock the solenoid electrical connector.

(5) Install the Structural Collar, refer to the Engine, Structural Collar Removal and Installation section (Fig. 16).

(6) Locate the power steering lines.

(7) Install the studs that hold the power steering lines and tighten to 61 N·m (45 ft. lbs.).

(8) Tighten nuts that hold the inner cooler lower tube.

(9) Install the inner cooler lower hose to the inner cooler and tighten clamp (Fig. 14).

(10) Lower vehicle.

(11) Pushing the inner cooler hose up and out of the way and install the upper starter bolt and ground wire (Fig. 12) and tighten bolt to 54 N·m (40 ft. lbs.).

(12) Install the air cleaner box.

(13) Tighten air cleaner hose clamp

(14) Connect the negative battery cable.

HEATED SYSTEMS

TABLE OF CONTENTS

page

HEATED SEAT SYSTEM 1
HEATED WINDOW DEFOGGER 10

HEATED SEAT SYSTEM

TABLE OF CONTENTS

page

HEATED SEAT SYSTEM
DESCRIPTION 1
OPERATION 2
DIAGNOSIS AND TESTING - HEATED SEAT SYSTEM 2
DRIVER HEATED SEAT SWITCH
DESCRIPTION 4
OPERATION 4
DIAGNOSIS AND TESTING - DRIVER HEATED SEAT SWITCH 4
REMOVAL 5
INSTALLATION 5
HEATED SEAT ELEMENT
DESCRIPTION 5
OPERATION 6
DIAGNOSIS AND TESTING - HEATED SEAT ELEMENT 6
REMOVAL 6
INSTALLATION 6
HEATED SEAT RELAY
DESCRIPTION 7
OPERATION 7
DIAGNOSIS AND TESTING - MICRO-RELAY . . . 7
REMOVAL 7
INSTALLATION 8
HEATED SEAT SENSOR
DESCRIPTION 8
OPERATION 8
DIAGNOSIS AND TESTING - HEATED SEAT SENSOR 8
REMOVAL 8
PASSENGER HEATED SEAT SWITCH
DESCRIPTION 8
OPERATION 8
DIAGNOSIS AND TESTING - PASSENGER HEATED SEAT SWITCH 9
REMOVAL 9
INSTALLATION 9

HEATED SEAT SYSTEM

DESCRIPTION

Individually controlled, electrically heated front seats are available as factory-installed equipment on this model. Vehicles with this option can be visually identified by the two separate heated seat switches mounted on each of the seat cushion side shields. The heated seat system allows the front seat driver and passenger to select from two different levels of supplemental electrical seat heating, or no seat heating to suit their individual comfort requirements.

WARNING: SOME VEHICLES ARE EQUIPPED WITH SEATBACK MOUNTED AIRBAGS (Fig. 1). BEFORE ATTEMPTING TO DIAGNOSE OR SERVICE ANY SEAT OR POWER SEAT SYSTEM COMPONENT YOU MUST FIRST DISCONNECT AND ISOLATE THE BATTERY NEGATIVE CABLE. THEN WAIT TWO MINUTES FOR THE SYSTEM CAPACITOR TO DISCHARGE BEFORE FURTHER SYSTEM SERVICE. THIS IS THE ONLY SURE WAY TO DISABLE THE AIRBAG SYSTEM. FAILURE TO DO SO COULD RESULT IN ACCIDENTAL AIRBAG DEPLOYMENT AND POSSIBLE PERSONAL INJURY.

The heated seat system for this vehicle includes the following major components, which are described in further detail later in this section:

- **Heated Seat Elements** - Four heated seat elements are used per vehicle, two for each front seat. One heating element in the seat back and one in the seat cushion. The heated seat sensor is integral to the seat cushion heating element. The heated seat

HEATED SEAT SYSTEM (Continued)

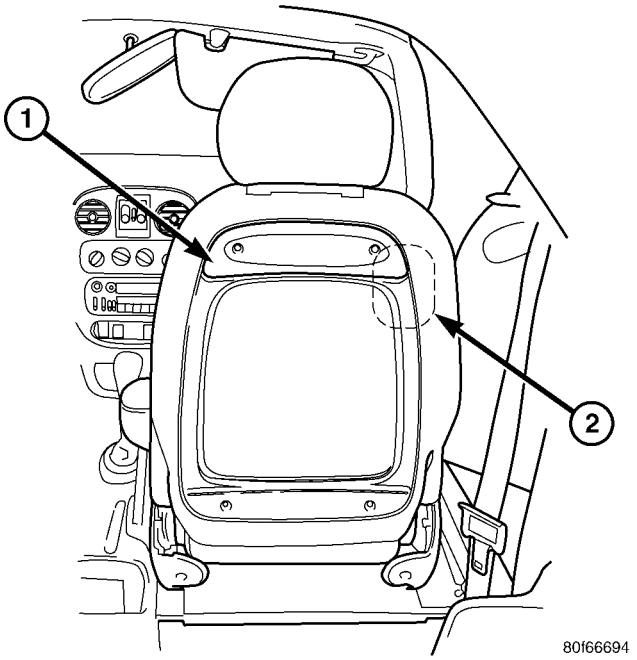

Fig. 1 PT AIRBAG EQUIPPED FRONT SEATS

1 - Front Seat Back Panel
2 - Internal Airbag Location

elements are integral to the front seat and seat back cushions. Refer to heated seat elements later in this section for additional information.

- **Heated Seat Module** - One heated seat module is used per vehicle. The module is mounted under the passenger seat cushion pan, near the forward edge of the seat. Refer to heated seat module in the electronic control modules section of the service manual for additional information.
- **Heated Seat Relay** - One heated seat relay is used per vehicle. The relay is located in the junction block and is responsible for distributing the voltage (B+) to the heated seat system.
- **Heated Seat Sensors** - Two heated seat sensors are used per vehicle, one for each front seat. The heated seat sensors are integral to each of the heated seat element assemblies. Refer to heated seat sensor later in this section for additional information.
- **Heated Seat Switches** - Two heated seat switches are used per vehicle, one for each front seat. The switches are mounted to each of the outboard front seat cushion side shields. Refer to heated seat switches later in this section for additional information.

Hard wired circuitry connects the heated seat system components to each other through the electrical system of the vehicle. These hard wired circuits are integral to wire harnesses, which are routed throughout the vehicle and retained by many different methods. These circuits may be connected to each other, to the vehicle electrical system and to the heated seat system components through the use of a combination of soldered splices, splice block connectors and different types of wire harness terminal connectors. Refer to the appropriate wiring information. The wiring information includes wiring diagrams, proper wire and connector repair procedures, further details on wire harness routing and retention, as well as pin-out and location views for the various wire harness connectors, splices and grounds.

OPERATION

The heated seat system is designed to provide individually controlled, supplemental heat to the seat cushion and seat back surfaces of both front seats. Because this system converts electrical current to heat, the heated seat system can provide a measure of warm comfort almost immediately upon entering a cold vehicle, rather than having to wait for the engine coolant to reach sufficient temperature to deliver heat through the conventional heater system. This system allows each front seat occupant to individually select one of two comfort levels, Hi or Lo, or to turn the heater for their seat off.

The heated seat system components operate on battery current received through a fuse in the Junction Block (JB) on a fused ignition switch output (run-acc) circuit so that the system will only operate when the ignition switch is in the On or Accessory positions. The heated seat system will be turned Off automatically whenever the ignition switch is turned to any position except On or Accessory. Also, the heated seat system will not operate when the surface temperature of the seat cushion cover at either heated seat sensor is above the designed temperature set points of the system. The heated seat system has a self-diagnostic capability. When certain failures are detected within the heated seat system, the system will provide a visual indication of the failure by flashing the Light Emitting Diode (LED) indicator lamps located in the heated seat switches. See the owner's manual in the vehicle glove box for more information on the features, use and operation of the heated seat system.

DIAGNOSIS AND TESTING - HEATED SEAT SYSTEM

Refer to **Wiring Diagrams** for the appropriate wiring information. The wiring information includes wiring diagrams, proper wire and connector repair procedures, further details on wire harness routing and retention, as well as pin-out and location views for the various wire harness connectors, splices and grounds.

HEATED SEAT SYSTEM (Continued)

HEATED SEAT SYSTEM DIAGNOSIS		
CONDITION	POSSIBLE CAUSES	CORRECTION
NO HEATED SEAT SWITCH ILLUMINATION WITH IGNITION ON	1. Faulty fuse.	1. Check heated seat fuse in Junction Block (JB). Replace fuse, if required.
	2. Wiring faulty.	2. Check fused ignition switch output (run-acc) circuit from heated seat switch connector to ignition switch. Repair, if required.
	3. Ground faulty.	3. Check for ground at heated seat switch connector. Repair, if required.
	4. Faulty switch.	4. Refer to Heated Seat Switch for the proper switch diagnosis and testing procedures.
SEATS HEAT, BUT NO HEATED SEAT SWITCH INDICATORS	1. Wiring faulty.	1. Check LED driver circuit(s) from heated seat switch connector to heated seat module connector. Repair, if required.
	2. Faulty switch LED.	2. Replace switch with known good unit. If OK, discard faulty switch.
	3. Faulty module.	3. Refer to Heated Seat Module for the proper module diagnosis and testing procedures. Replace, if required.
SEATS DO NOT HEAT AND NO HEATED SEAT SWITCH INDICATORS	1. Faulty circuit breaker.	1. Check power seat circuit breaker in Junction Block (JB). Replace, if required.
	2. Faulty relay.	2. Refer to Heated Seat Relay for the proper relay diagnosis and testing procedures. Replace, if required.
	3. Faulty module.	3. Refer to Heated Seat Module for the proper module diagnosis and testing procedures. Replace, if required.
HEATED SEAT SWITCH INDICATORS FLASHING	1. Faulty sensor.	1. Refer to Heated Seat Sensor for the proper heated seat system self-diagnostic routine. Repair, as required.
	2. Faulty element.	2. Refer to Heated Seat Element for the proper heated seat system self-diagnostic routine. Repair, as required.

SELF-DIAGNOSTICS - HEATED SEAT SYSTEM

The heated seat system is capable of performing some self-diagnostics. The following table depicts the various failure modes which will be reported to the occupant via flashing of the heated seat switch Light-Emitting Diode (LED) indicators. Flashing LED indicators on the driver side switch indicate that a fault exists in the driver side of the system and, likewise, flashing LED indicators on the passenger side switch indicate a fault exists in the passenger side of the system. The LED indicators will flash at a rate of approximately one-half second on, and one-half second off for a duration of one minute. This process will repeat each time an attempt is made to turn the system on with the heated seat switches until the problem has been corrected.

HEATED SEAT SYSTEM (Continued)

HEATED SEAT SYSTEM SELF-DIAGNOSTIC TABLE		
FAILURE MODE	SWITCH ″HI″ LED INDICATOR	SWITCH ″LO″ LED INDICATOR
Shorted Heating Element	Flashing	Flashing
Open Heating Element	Flashing	Off
NTC Sensor Value Out of Range	Off	Flashing

DRIVER HEATED SEAT SWITCH

DESCRIPTION

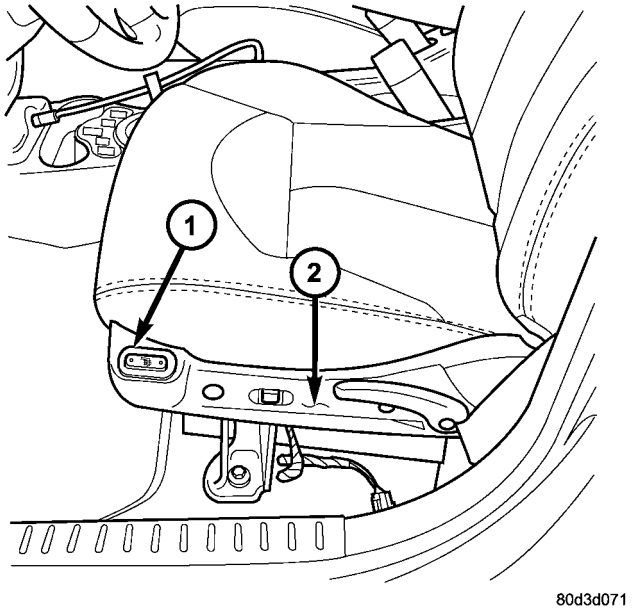

Fig. 2 PT HEATED SEAT

1 - HEATED SEAT SWITCH
2 - SEAT CUSHION SIDE SHIELD

The heated seat switches are located on the outboard cushion side shield of the driver (Fig. 2) and passenger seats. The two, momentary rocker type switches provide a resistor multiplexed signal to the Heated Seat Module (HSM) through separate hard wired circuits. Each switch contains two light emitting diodes (LED), one for each High and Low setting to let the occupant know that the seat heater system is on.

The heated seat switches and their LED's cannot be repaired. If either switch is faulty or damaged the entire switch must be replaced.

OPERATION

There are three modes that can be selected with each of the heated seat switches: Off, Low, and High. When the front of the switch rocker is depressed, the High mode is selected and the high mode LED indicator illuminates. Depressing the front of the switch rocker a second time will turn the heated seat to Off. When the rear of the switch rocker is depressed, the Low mode is selected and the low mode LED indicator illuminates. Depressing the rear of the switch rocker a second time will also turn the heated seat to Off. In addition, the heated seats will automatically return to the Off mode anytime the vehicle ignition switch is turned Off.

Both switches provide separate resistor multiplexed hard wire inputs to the Heated Seat Module to indicate the selected mode. The Heated Seat Module responds to the heated seat switch status messages by controlling the output to the seat heater elements of the selected seat. The Low heat position set point is about 36° C (97° F), and the High heat position set point is about 41° C (105° F).

DIAGNOSIS AND TESTING - DRIVER HEATED SEAT SWITCH

For circuit description and diagrams, refer to **Wiring Diagrams**.

Inspect the Heated Seat Switches for apparent damage or sticking/binding and replace if required. Refer to Heated Seat Switch Removal and Installation in this section.

Using an ohmmeter, check the continuity between pin 4 and pin 6 of the switch. Measure the resistance between the two pins while depressing the appropriate button. Refer to (Fig. 3) and the Heated Seat Switch Pin Call-Out table. If the readings do not correspond to those in the Heated Seat Switch Continuity table, replace the heated seat switch.

DRIVER HEATED SEAT SWITCH (Continued)

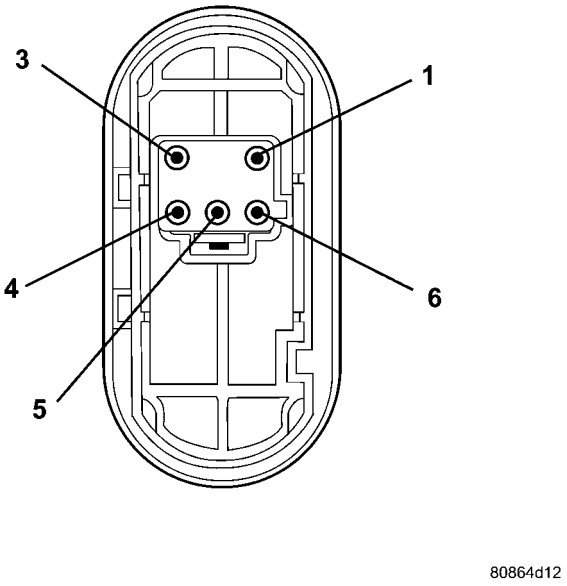

Fig. 3 Heated Seat Switch (Rear View)

HEATED SEAT SWITCH PIN CALL-OUT

PIN	FUNCTION
1	LO LED
2	OPEN
3	GROUND
4	IGNITION FEED
5	HI LED
6	REQUEST LINE

TESTING HEATED SEAT SWITCH CONTINUITY

CONTINUITY BETWEEN	SWITCH POSITION	READING
PIN 4 AND 6	OFF	2.2 Kilohms (2200 Ohms)
PIN 4 AND 6	LO	.415 Kilohms (415 Ohms
PIN 4 AND 6	HI	33 Ohms

REMOVAL

(1) Disconnect and isolate the negative battery cable remote terminal from the remote battery post.

(2) Remove the appropriate seat cushion side shield. Refer to the Body section of this manual for the procedure.

(3) Working from the underside of the switch, gently rock the switch back and forth out of its mounting location.

INSTALLATION

(1) Gently rock the switch back and forth in to its mounting location.

(2) Install the appropriate seat cushion side shield. Refer to the Body section of this manual for the procedure.

(3) Connect the remote negative battery cable.

HEATED SEAT ELEMENT

DESCRIPTION

The heated seat system includes two seat heating elements in each front seat, one for the seat cushion (Fig. 4) and the other for the seat back. All models use two carbon fiber mesh heating elements for each seat that are connected in parallel with the Heated Seat Module (HSM). The temperature sensor is a Negative Temperature Coefficient (NTC) thermistor. One temperature sensor is used for each seat, and it is located in the seat cushion heating element for all models.

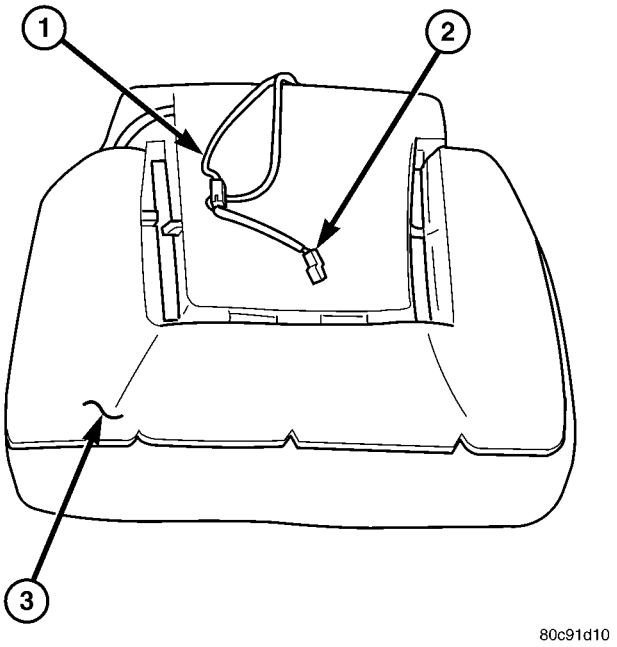

Fig. 4 HEATING ELEMENT INSTALLED - TYPICAL

1 - SEAT BACK WIRE HARNESS
2 - HEATED SEAT WIRE HARNESS CONNECTOR
3 - HEATED SEAT CUSHION ELEMENT

The seat heating elements are glued onto the seat and seat back cushions. The heated seat elements and the temperature sensor cannot be adjusted or repaired and, if faulty or damaged a new service part must be installed. Refer to the procedure in this section.

HEATED SEAT ELEMENT (Continued)

OPERATION

The heated seat elements resist the flow of electrical current. When battery current is passed through the elements, the energy lost by the resistance of the elements is released in the form of heat. The temperature sensor is a NTC thermistor. The heated seat module supplies a five-volt current to one side of each sensor, and monitors the voltage drop through the sensor on a return circuit. When the temperature of the seat cushion cover rises, the resistance of the sensor decreases. The heated seat module uses this temperature sensor input to monitor the temperature of the seat, and regulates the current flow to the seat heating elements accordingly.

DIAGNOSIS AND TESTING - HEATED SEAT ELEMENT

For complete circuit diagrams, refer to **Wiring Diagrams**.

NOTE: When checking heated seat elements for continuity, be certain to move the heating element being checked. Moving the element, such as sitting in the seat will eliminate the possibility of an intermittent open in the element which would only be evident if the element was in a certain position. Failure to check the element in various positions could result in an incomplete test.

(1) Disconnect and isolate the battery negative cable. Disconnect the heated seat module wire harness connector. Check for continuity between the seat heater B+ driver circuit cavity and a good ground, preferably under the seat. There should be continuity, less than 7 ohms. If OK, go to Step 2. If not OK, replace the heating element assembly.

(2) Check for continuity between the seat heater B+ driver circuit cavity and the seat back frame. There should be **no** continuity. If OK, go to Diagnosis and Testing the heated Seat Module in the electronic control modules section of this service manual for additional diagnostics. If not OK, replace the element as required.

REMOVAL

Do not attempt to remove the heating element from the seat or seat back cushion. The original element is permanently attached to the seat cushions and cannot be removed without damaging the cushion. The service replacement (if available) heating elements are designed to be applied directly over the original seat heating elements.

(1) Disconnect and isolate the negative battery cable.

(2) Remove the appropriate seat cushion or seat back trim cover. Refer to the Body section of the service manual for the procedures.

(3) Disconnect the inoperative heated seat cushion or seat back element electrical connectors.

(4) Locate the wires leading from the inoperative heating element and cut them off flush with the edge of the original heating element.

INSTALLATION

(1) Peel off the adhesive backing on the back of the replacement heating element and stick directly over the original heating element (Fig. 5).

CAUTION: During the installation of the replacement heating element, be careful not to fold or crease the element assembly. Folds or creases will cause premature failure.

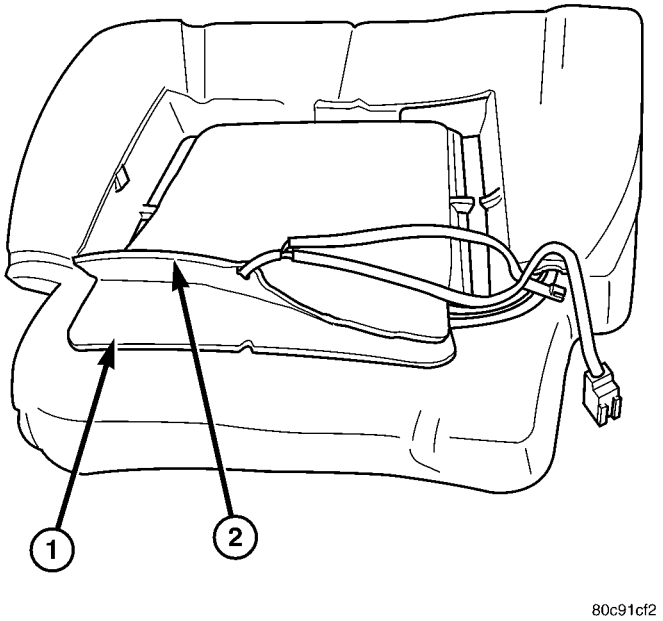

Fig. 5 HEATING ELEMENT INSTALLATION

1 - ORIGINAL (INOPERATIVE) HEATING ELEMENT
2 - REPLACEMENT HEATING ELEMENT

(2) Connect the new heating element electrical connectors (Fig. 6).

(3) Connect the negative battery cable.

(4) Verify heated seat system operation.

(5) Install the appropriate seat cushion or seat back trim cover. Make certain the seat wire harness is correctly routed through the seat and seat back. The excess wire between the cushion and back elements should be securely tucked between the rear of the cushion foam and the rear carpet flap of the trim cover.

HEATED SEAT ELEMENT (Continued)

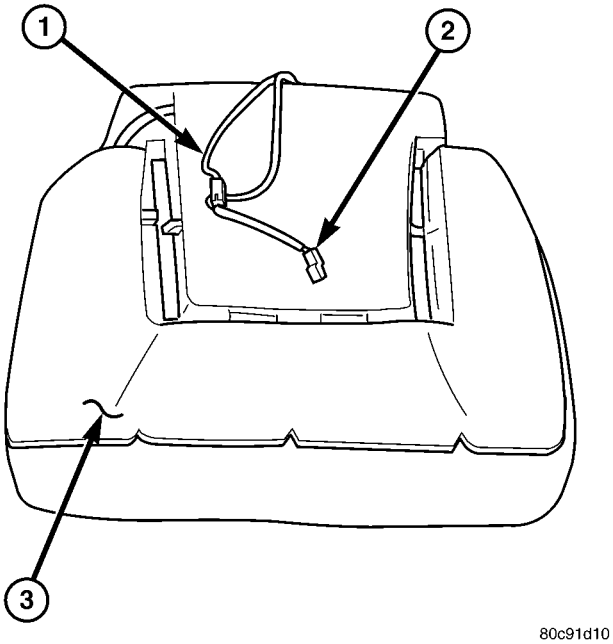

Fig. 6 HEATING ELEMENT INSTALLED

1 - SEAT BACK WIRE HARNESS
2 - HEATED SEAT WIRE HARNESS CONNECTOR
3 - HEATED SEAT CUSHION ELEMENT

HEATED SEAT RELAY

DESCRIPTION

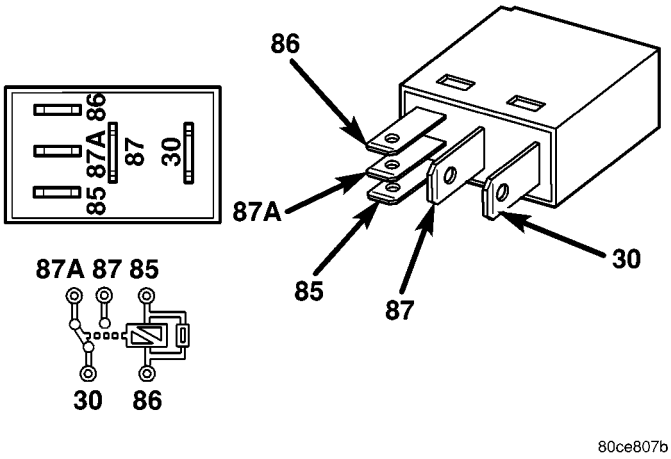

Fig. 7 ISO MICRO RELAY

30 - COMMON FEED
85 - COIL GROUND
86 - COIL BATTERY
87 - NORMALLY OPEN
87A - NORMALLY CLOSED

A micro-relay is a conventional International Standards Organization (ISO) micro relay (Fig. 7). Relays conforming to the ISO specifications have common physical dimensions, current capacities, terminal patterns, and terminal functions. The relay is contained within a small, rectangular, molded plastic housing and is connected to all of the required inputs and outputs by five integral male spade-type terminals that extend from the bottom of the relay base.

Relays cannot be adjusted or repaired and, if faulty or damaged, the unit must be replaced.

OPERATION

A micro-relay is an electromechanical switch that uses a low current input from one source to control a high current output to another device. The movable common feed contact point is held against the fixed normally closed contact point by spring pressure. When the relay coil is energized, an electromagnetic field is produced by the coil windings. This electromagnetic field draws the movable relay contact point away from the fixed normally closed contact point, and holds it against the fixed normally open contact point. When the relay coil is de-energized, spring pressure returns the movable contact point back against the fixed normally closed contact point. A resistor is connected in parallel with the relay coil in the relay, and helps to dissipate voltage spikes and electromagnetic interference that can be generated as the electromagnetic field of the relay coil collapses.

DIAGNOSIS AND TESTING - MICRO-RELAY

(1) Remove the relay from its mounting location.

(2) A relay in the de-energized position should have continuity between terminals 87A and 30, and no continuity between terminals 87 and 30. If OK, go to Step 3. If not OK, replace the faulty relay.

(3) Resistance between terminals 85 and 86 (electromagnet) should be 67.5 - 82.5 ohms. If OK, go to Step 4. If not OK, replace the faulty relay.

(4) Connect a battery to terminals 85 and 86. There should now be continuity between terminals 30 and 87, and no continuity between terminals 87A and 30. If OK, relay is OK at this time. Refer to the appropriate diagnostic information for further testing.

Refer to the appropriate wiring information. The wiring information includes wiring diagrams, proper wire and connector repair procedures, details of wire harness routing and retention, connector pin-out information and location views for the various wire harness connectors, splices and grounds.

REMOVAL

(1) Remove the relay by grasping it firmly and pulling it straight out from its receptacle.

HEATED SEAT RELAY (Continued)

INSTALLATION

(1) Align the micro-relay terminals with the terminal cavities in the receptacle.

(2) Push firmly and evenly on the top of the relay until the terminals are fully seated in the terminal cavities in the receptacle.

HEATED SEAT SENSOR

DESCRIPTION

The heated seat temperature sensor is a Negative Temperature Coefficient (NTC) thermistor. One temperature sensor is used for each seat. The sensor is located in the seat cushion heating element for all models.

The heated seat sensor cannot be adjusted or repaired and if it is found to be faulty, the complete heated seat element must be replaced.

OPERATION

The temperature sensor is a NTC thermistor. The heated seat module supplies a five-volt current to one side of each sensor, and monitors the voltage drop through the sensor on a return circuit. When the temperature of the seat cushion cover rises, the resistance of the sensor decreases. The heated seat module uses this temperature sensor input to monitor the temperature of the seat, and regulates the current flow to the seat heating elements accordingly.

DIAGNOSIS AND TESTING - HEATED SEAT SENSOR

For complete circuit diagrams, refer to **Wiring Diagrams**.

NOTE: Any resistance values (ohms Ω) given in the following text are supplied using the automatic range generated by a FLUKE® automotive meter. If another type of measuring device is used the values generated may not be the same as the results shown here, or may have to be converted to the range used here.

(1) Position the driver seat in the full rearward position.

(2) Backprobe the heated seat module wire harness connector, do not disconnect. Disconnecting the module will disable the entire heated seat system. Using an voltmeter, check the voltage of the seat temperature sensor input cavity of the heated seat module wire harness connector. The seat sensor input voltage should be between 1.7 volts and 3.0 volts with the system ON. If OK, go to Step 3. If not OK, replace the faulty seat cushion heating element and sensor assembly.

(3) Test the seat wire harness between the heated seat module connector and the heated seat wire harness connector for shorted or open circuits. If OK, refer to **Diagnosis and Testing the Heated Seat Module** in Electronic Control Modules, for the proper heated seat module diagnosis and testing procedures. If not OK, repair the shorted or open heated seat wire harness as required.

REMOVAL

(1) For heated seat sensor replacement procedure (Refer to 8 - ELECTRICAL/HEATED SEATS/ HEATED SEAT ELEMENT - REMOVAL).

PASSENGER HEATED SEAT SWITCH

DESCRIPTION

The heated seat switches are located on the outboard cushion side shield of the driver and passenger seats. The two, momentary rocker type switches provide a resistor multiplexed signal to the Heated Seat Module (HSM) through separate hard wired circuits. Each switch contains two light emitting diodes (LED), one for each High and Low setting to let the occupant know that the seat heater system is on.

The heated seat switches and their LED's cannot be repaired. If either switch is faulty or damaged the entire switch must be replaced.

OPERATION

There are three modes that can be selected with each of the heated seat switches: Off, Low, and High. When the front of the switch rocker is depressed, the High mode is selected and the high mode LED indicator illuminates. Depressing the front of the switch rocker a second time will turn the heated seat to Off. When the rear of the switch rocker is depressed, the Low mode is selected and the low mode LED indicator illuminates. Depressing the rear of the switch rocker a second time will also turn the heated seat to Off. In addition, the heated seats will automatically return to the Off mode anytime the vehicle ignition switch is turned Off.

Both switches provide separate resistor multiplexed hard wire inputs to the Heated Seat Module to indicate the selected mode. The Heated Seat Module responds to the heated seat switch status messages by controlling the output to the seat heater elements of the selected seat. The Low heat position set point is about 36° C (97° F), and the High heat position set point is about 41° C (105° F).

PASSENGER HEATED SEAT SWITCH (Continued)

DIAGNOSIS AND TESTING - PASSENGER HEATED SEAT SWITCH

For circuit description and diagrams, refer to **Wiring Diagrams**.

Inspect the Heated Seat Switches for apparent damage or sticking/binding and replace as required. Refer to Heated Seat Switch Removal and Installation in this section.

Using an ohmmeter, check the continuity between pin 4 and pin 6 of the switch. Measure the resistance between the two pins, while depressing the appropriate buttons. Refer to (Fig. 8)and the Heated Seat Switch Pin Call-Out table. If the readings do not correspond to those in the Heated Seat Switch Continuity table, replace the heated seat switch.

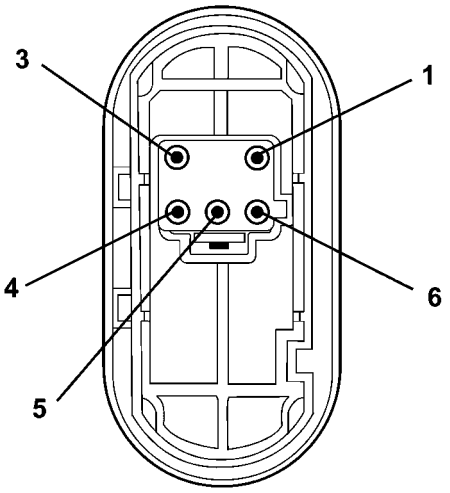

80864d12

Fig. 8 Heated Seat Switch (Rear View)

HEATED SEAT SWITCH PIN CALL-OUT

PIN	FUNCTION
1	LO LED
2	OPEN
3	GROUND
4	IGNITION FEED
5	HI LED
6	REQUEST LINE

TESTING HEATED SEAT SWITCH CONTINUITY

CONTINUITY BETWEEN	SWITCH POSITION	READING
PIN 4 AND 6	OFF	2.2 Kilohms (2200 Ohms)
PIN 4 AND 6	LO	.415 Kilohms 415 Ohms
PIN 4 AND 6	HI	33 Ohms

REMOVAL

(1) Disconnect and isolate the negative battery cable remote terminal from the remote battery post.

(2) Remove the appropriate seat cushion side shield. Refer to the Body section of this manual for the procedure.

(3) Working from the underside of the switch, gently rock the switch back and forth out of its mounting location.

INSTALLATION

(1) Gently rock the switch back and forth in to its mounting location.

(2) Install the appropriate seat cushion side shield. Refer to the Body section of this manual for the procedure.

(3) Connect the remote negative battery cable.

HEATED WINDOW DEFOGGER

TABLE OF CONTENTS

	page
HEATED WINDOW DEFOGGER	
DESCRIPTION	10
OPERATION	10
DIAGNOSIS AND TESTING	
REAR WINDOW DEFOGGER SYSTEM	10
DEFOGGER SWITCH	
DESCRIPTION	11
OPERATION	11
DIAGNOSIS AND TESTING	
REAR WINDOW DEFOGGER SWITCH	11
REAR WINDOW DEFOGGER GRID	
DIAGNOSIS AND TESTING	
GRID LINES	12
STANDARD PROCEDURE	
GRID LINE AND TERMINAL REPAIR	13
REAR WINDOW DEFOGGER GRID LINES	13

HEATED WINDOW DEFOGGER

DESCRIPTION

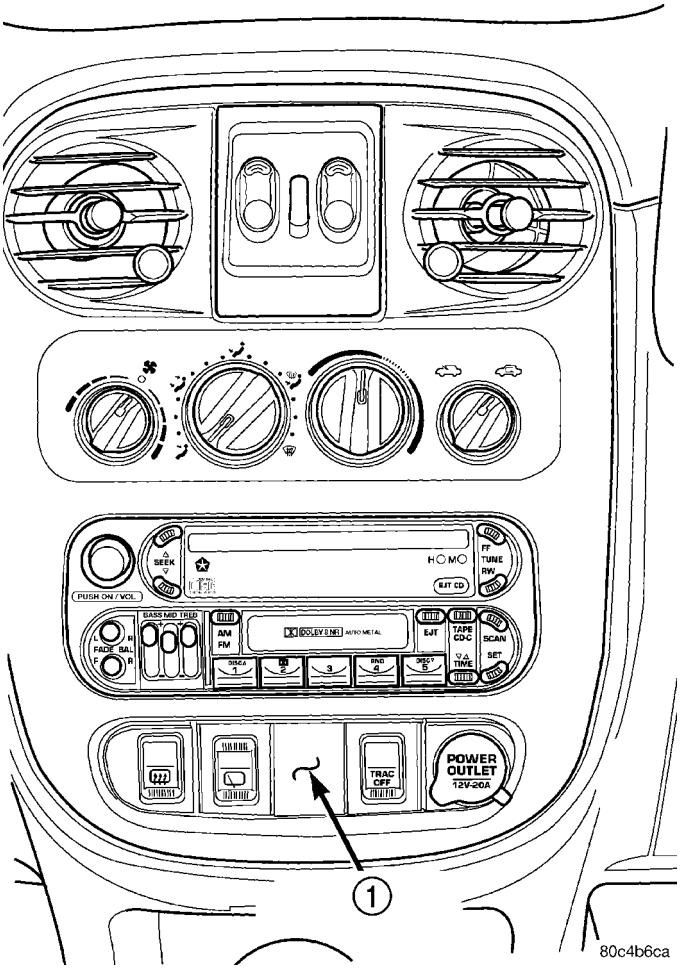

Fig. 1 Rear Window Defogger Switch Location

1 - ACCESSORY SWITCH BEZEL

The system consists of a rear glass with two vertical bus bars and a series of electrically connected grid lines fired on the inside surface. A control switch and a timing circuit are combined into a single assembly.

A push-button at the center of the instrument panel, below the radio, turns the defroster ON or OFF.

Circuit protection is provided by a cartridge fuse located in the Power Distribution Center (PDC) for the heated grid circuit, and by a fuse in the fuse block for the control circuit.

OPERATION

When the switch is turned to the ON position, current is directed to the rear defogger grid lines. The heated grid lines heat the rear glass to clear the surface of fog or frost. An amber light shows that the defroster is on.

NOTE: The defroster turns off automatically after 10 minutes of operation. Each following activation of the defroster will last for five minutes.

CAUTION: Grid lines can be damaged or scraped off with sharp instruments. Care should be taken in cleaning glass or removing foreign materials, decals or stickers. Normal glass cleaning solvents or hot water used with rags or toweling is recommended.

DIAGNOSIS AND TESTING

REAR WINDOW DEFOGGER SYSTEM

Electrically heated rear window defogger operation can be checked in the vehicle in the following manner:

(1) Turn the ignition switch to the ON position.

HEATED WINDOW DEFOGGER (Continued)

(2) Connect an ammeter in series with the battery. Push the rear window defogger switch to the ON position. A distinct increase in amperage draw should be noted.

(3) The rear window defogger operation can be checked by feeling the glass. A distinct difference in temperature between the grid lines and adjacent clear glass can be detected in three to four minutes of operation.

(4) Using a DC voltmeter, connect the negative lead to Point B, and the positive lead to Point A (Fig. 2). The voltmeter should read 10-14 volts.

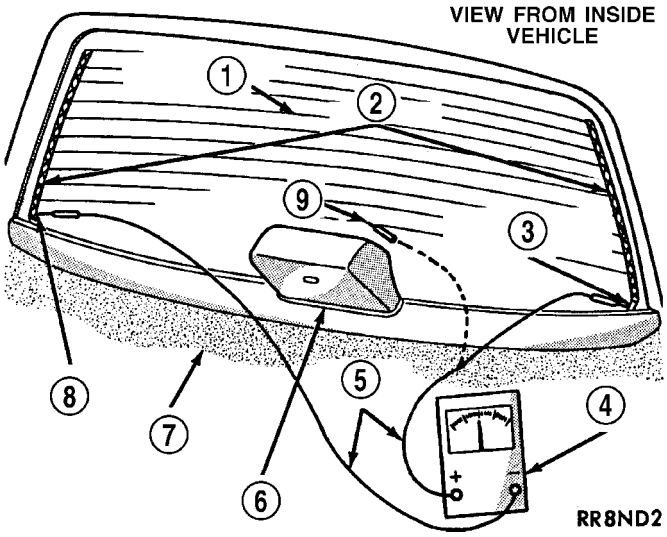

Fig. 2 Rear Glass Grid Line Test - Typical

1 - REAR WINDOW DEFOGGER
2 - BUS BARS
3 - VOLTAGE FEED “A”
4 - VOLTMETER
5 - PICK-UP LEADS
6 - C.H.M.S.L. TRIM COVER
7 - PARCEL SHELF
8 - GROUND “B”
9 - MID-POINT “C”

(5) Step 2, Step 3 or Step 4 above will confirm system operation. Indicator light illumination means that there is power available at the switch output, and does not necessarily verify system operation.

(6) If turning the switch ON produced no distinct current draw on the ammeter the problem should be isolated in the following manner:

(a) Confirm the ignition switch is ON.

(b) Ensure that the heated rear glass feed wire is connected to the terminal or pigtail and that the ground wire is in fact grounded.

(c) Ensure that the cartridge fuse and control circuit fuse are OK and all electrical connections are secure.

(7) When the above steps have been completed and the system is still inoperative, one or more of the following is defective:

(a) Rear Window Defogger Switch.

(b) All rear window grid lines would have to be broken or one of the feed wires are not connected for the system to be inoperative.

(8) If turning the switch ON produces severe voltmeter deflection, the circuit should be closely checked for a shorting condition.

(9) If the system operation has been verified but indicator lamp does not light, replace the switch.

(10) For detailed wiring information, refer to Wiring Diagrams.

DEFOGGER SWITCH

DESCRIPTION

The rear window defogger switch is a control switch and timing circuit integrated into a single panel mounted assembly. The switch is located on the instrument panel center, just below the radio (Fig. 1) . The rear window defogger switch and the rear window defogger switch LED indicator cannot be repaired and, if faulty or damaged, the entire switch assembly must be replaced.

OPERATION

Actuating the switch energizes the circuit which allows current to flow through the grid lines. Upon initial actuation for approximately eight to ten minutes, or until either the switch or ignition is turned off. An indicating lamp illuminates a Light Emitting Diode (LED) inlaid in the control switch.

DIAGNOSIS AND TESTING

REAR WINDOW DEFOGGER SWITCH

The rear window defogger switch may be tested in the vehicle or out of the vehicle, on the bench.

IN-VEHICLE TESTING

(1) Remove the switch from the instrument panel but leave the switch connected, refer to Instrument Panel Systems, Accessory Switch Bezel Removal and Installation.

(2) Turn the ignition switch ON.

DEFOGGER SWITCH (Continued)

(3) Using a voltmeter, check for battery voltage at Pin 1 and 2 (Fig. 3).

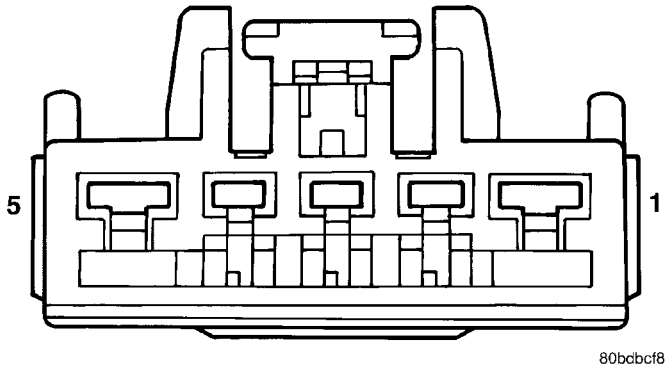

Fig. 3 Rear Window Defogger Switch Harness Connector

REAR WINDOW DEFOGGER SWITCH AND HARNESS CONNECTOR PIN CALL-OUT

PIN	FUNCTION
1	FUSED B+
2	FUSED IGNITION SWITCH OUTPUT (RUN)
3	GROUND
4	PANEL LAMPS DRIVER
5	PANEL LAMPS DRIVER

(a) If OK, go to Step 4.

(b) If NOT OK, check fuse 7 in the fuse block and the 40 Amp cartridge fuse in the Power Distribution Center (PDC). If fuses are OK, check wiring circuit. Refer to Wiring Diagrams.

(4) Check Pin 5, with switch in the ON position there should be battery voltage and no voltage in the OFF position.

(a) If OK, go to Step 5.

(b) If NOT OK, no voltage in the ON position or voltage in the OFF position. Replace the switch.

(5) Press switch to ON position. The indicator lamp should come on and remain on for approximately 10 minutes. If the indicator lamp fails to light or no voltage is present for approximately 10 minutes. Replace Rear Window Defogger Switch. Refer to Instrument Panel Systems, Accessory Switch Bezel Removal and Installation.

BENCH TESTING

(1) First remove switch. Refer to Instrument Panel Systems, Accessory Switch Bezel Removal and Installation.

(2) With switch removed from vehicle, use a jumper wire and connect a 12 volt supply to Pin 1 and 2. Using a third jumper wire, ground Pin 3. Refer to (Fig. 4) and the Rear Window Defogger Switch and Harness Connector Pin Call-Out table.

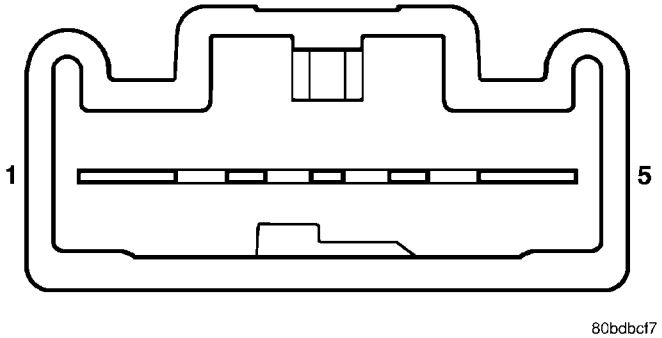

Fig. 4 Rear Window Defogger Switch Connector

(3) Follow the same procedures used for IN-VEHICLE TESTING, except for step Step 2.

REAR WINDOW DEFOGGER GRID

DIAGNOSIS AND TESTING

GRID LINES

The horizontal grid lines and vertical bus bar lines printed and fired on the inside surface of rear window glass comprise an electrical parallel circuit. The electrically conductive lines are composed of a silver-ceramic material which when fired on glass becomes bonded to the glass and is highly resistant to abrasion. It is possible however, that a break may occur in an individual grid line resulting in no current flow through the line. To detect breaks in grid lines the following procedure is required:

(1) Turn ignition ON and turn control switch to ON. The LED should come on.

(2) Using a DC voltmeter with 0-15 volt range, contact terminal (B) with the negative lead of the voltmeter. With the positive lead of the voltmeter, contact terminal (A). The voltmeter should read 10-14 volts. A lower voltage reading indicates a poor connection in the feed or the ground circuit.

(3) With the negative lead of the voltmeter, contact a good body ground point. The voltage reading should not change.

(4) Connect the negative lead of the voltmeter to terminal (B) and touch each grid line at Mid-Point with the positive lead. A reading of:

- Approximately 6 volts indicates the line is OK.
- 0 volts indicates a break in line between Mid-Point (C) and terminal (A).

REAR WINDOW DEFOGGER GRID (Continued)

• 10-14 volts indicates a break between Mid-Point (C) and terminal (B).

Move the lead toward the break and voltage will change as soon as the break is crossed.

STANDARD PROCEDURE

GRID LINE AND TERMINAL REPAIR

WARNING:
REPAIR KIT MAY CAUSE SKIN OR EYE IRRITATION. CONTAINS EPOXY RESIN AND AMINE TYPE HARDENER, HARMFUL IF SWALLOWED. AVOID CONTACT WITH SKIN AND EYES. FOR SKIN, WASH AFFECTED AREAS WITH SOAP AND WATER. DO NOT TAKE INTERNALLY. IF TAKEN INTERNALLY, INDUCE VOMITING; CALL A PHYSICIAN IMMEDIATELY. IF IN CONTACT WITH EYES, FLUSH WITH PLENTY OF WATER. USE WITH ADEQUATE VENTILATION. DO NOT USE NEAR FIRE OR FLAME. CONTENTS CONTAIN 3 PERCENT FLAMMABLE SOLVENTS.
KEEP OUT OF REACH OF CHILDREN.

The repair of the grid lines or the terminal is possible using the Mopar ® Repair Package or equivalent.

(1) Mask repair area so conductive epoxy can be extended onto the line or the bus bar (Fig. 5).

(2) Follow instructions in repair kit for preparing damaged area.

(3) Remove package separator clamp and mix plastic conductive epoxy thoroughly. Fold in half and cut center corner to dispense epoxy.

(4) For grid line, mark off area to be repaired with masking tape or a template (Fig. 5).

(5) Apply conductive epoxy through slit in masking tape. Overlap both ends of the break by 19 mm (3/4 inch).

(6) For a terminal or pigtail replacement, mask adjacent areas so epoxy can be extended onto line as well as bus bar. Apply a thin layer of epoxy to area where terminal was fastened and to adjacent line.

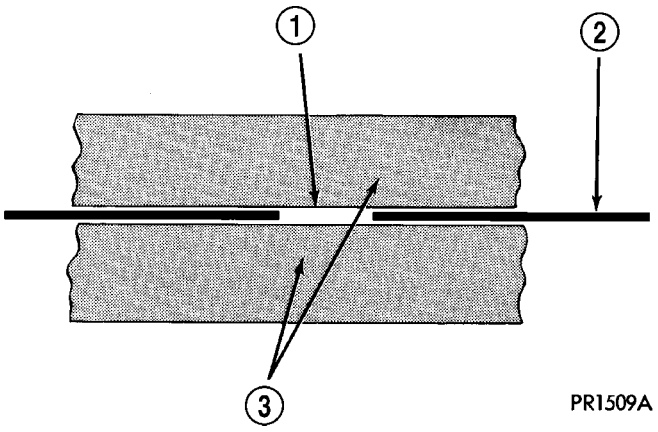

Fig. 5 Grid Line Repair

1 - BREAK
2 - GRID LINE
3 - MASKING TAPE

(7) Apply a thin layer of conductive epoxy on terminal and place terminal on desired location. To prevent terminal from moving while the epoxy is curing, it must be wedged or clamped.

(8) Carefully remove masking tape from grid line.

CAUTION: Do not allow the glass surface to exceed 204°C (400°F), glass may fracture.

(9) Allow epoxy to cure 24 hours at room temperature or use heat gun with a 260°to 371°C (500° to 700°F) range for 15 minutes. Hold gun approximately 254 mm (10 inches) from repaired area.

(10) After conductive epoxy is properly cured remove wedge from terminal and check out operation of rear window defogger. Do not attach connectors until curing is complete.

REAR WINDOW DEFOGGER GRID LINES

The rear window defogger grid lines are serviced with the rear window glass. If a grid line repair does not fix the grid line and allow it to function properly, replacement of the liftgate glass is necessary. Refer to Body Removal and Installation, Rear Window.

HORN

TABLE OF CONTENTS

page

HORN SYSTEM
DESCRIPTION 1
OPERATION 1
DIAGNOSIS AND TESTING - HORN SYSTEM . . . 1
HORN
DIAGNOSIS AND TESTING - HORN 3
REMOVAL 3
INSTALLATION 3

page

HORN RELAY
DIAGNOSIS AND TESTING - HORN RELAY 3
REMOVAL 4
INSTALLATION 4
HORN SWITCH
DESCRIPTION 4
OPERATION 4
REMOVAL 4

HORN SYSTEM

DESCRIPTION

A dual-note electric horn system is standard factory-installed equipment on this model.

The dual-note horn system features electromagnetic horn units. The horn system includes the following major components:

- **Horn** - The two horns are located on the right side frame rail.
- **Horn Relay** - The horn relay is located in the Junction Block (JB).
- **Horn Switch** - The horn switch is molded into the driver airbag.

OPERATION

The horn system operates on battery current received through a fuse in the Power Distribution Center (PDC). The horn system circuit is designed so that the system will remain operational, regardless of the ignition switch position.

DIAGNOSIS AND TESTING - HORN SYSTEM

HORN SYSTEM TEST TABLE

CONDITION	POSSIBLE CAUSE	CORRECTION
HORN SOUNDS CONTINUOUSLY. NOTE: IMMEDIATELY UNPLUG HORN AND RELAY IN THE JUNCTION BLOCK	1. FAULTY HORN RELAY.	1. REFER TO HORN RELAY TEST.
	2. HORN CONTROL CIRCUIT TO RELAY SHORTED TO GROUND.	2. CHECK TERMINAL 65 IN PDC FOR CONTINUITY TO GROUND INDICATES: A. WIRING HARNESS SHORTED TO GROUND. B. FIND THE SHORT AND REPAIR AS NECESSARY.
	4. PINCHED HORN SWITCH WIRE UNDER DRIVER AIRBAG MODULE.	4. REPLACE DRIVER AIRBAG MODULE.
	5. FAULTY HORN SWITCH	5. REPLACE DRIVER AIRBAG MODULE.

HORN SYSTEM (Continued)

CONDITION	POSSIBLE CAUSE	CORRECTION
HORN SOUND INTERMITTENTLY AS THE STEERING WHEEL IS TURNED.	1. HORN RELAY CONTROL CIRCUIT X3 IS SHORTED TO GROUND INSIDE STEERING WHEEL.	1. REMOVE DRIVER AIRBAG MODULE AND CHECK FOR RUBBING OR LOOSE WIRE/ CONNECTOR, REPAIR AS NECESSARY.
	2. PINCHED HORN SWITCH WIRE UNDER DRIVER AIRBAG MODULE.	2. REPLACE DRIVER AIRBAG MODULE.
	3. FAULTY HORN SWITCH.	3. REPLACE DRIVER AIRBAG MODULE.
HORN DOES NOT SOUND	1. CHECK FUSE 23 IN THE PDC.	1. REPLACE FUSE IF BLOWN AS REPAIR AS NECESSARY.
	2. NO VOLTAGE AT HORN RELAY TERMINALS 62 & 66 AND FUSE IS OK.	2. NO VOLTAGE, REPAIR PDC AS NECESSARY.
	3. OPEN CIRCUIT FROM TERMINAL 65 OF THE RELAY TO HORN SWITCH X3 CIRCUIT.	3. REPAIR CIRCUIT AS NECESSARY.
	4. FAULTY OR DAMAGED HORN.	4. VOLTAGE AT HORN WHEN HORN SWITCH IS PRESSED, REPLACE HORN.
	5. FAULTY HORN SWITCH	5. REPLACE DRIVER AIRBAG MODULE.
FUSE BLOWS WHEN HORN IS BLOWN	1. SHORT CIRCUIT IN HORN OR HORN WIRING	1. REMOVE HORN RELAY, CHECK FOR SHORTED HORN OR HORN WIRING. DISCONNECT HORN WIRE HARNESS TO ISOLATE SHORT AND REPAIR AS NECESSARY.
FUSE BLOWS WITHOUT BLOWING HORN NOTE: FOR WIRING REPAIRS REFER TO GROUP 8W, WIRE DIAGRAMS.	1. SHORT CIRCUIT	1. REMOVE RELAY, INSTALL NEW FUSE, IF FUSE DOES NOT BLOW REPLACE HORN RELAY. IF FUSE BLOWS WITH RELAY REMOVED, CHECK FOR SHORT TO GROUND WITH OHMMETER BETWEEN TERMINALS 62 & 66 AND THE FUSE TERMINAL. REPAIR AS NECESSARY.

HORN

DIAGNOSIS AND TESTING - HORN

(1) Disconnect wire connector at horn.

(2) Using a voltmeter, connect one lead to ground terminal and the other lead to the positive wire terminal (Fig. 1).

HORN CONNECTOR PIN CALL-OUT

PIN #	CIRCUIT NAME
1	GROUND
2	HORN RELAY OUTPUT

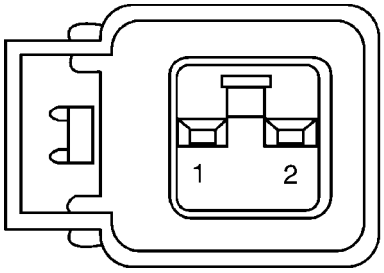

80b6f054

Fig. 1 Horn Harness Connector

(3) Depress the horn switch, battery voltage should be present.

(4) If no voltage, refer to Horn System Test. If voltage is OK, go to Step 5.

(5) Using ohmmeter, test ground wire for continuity to ground.

(6) If no ground repair as necessary.

(7) If wires test OK and horn does not sound, replace horn.

REMOVAL

(1) Disconnect and isolate the battery negative cable.

(2) Remove the right front wheelhouse splash shield.

(3) Disconnect the harness connector.

(4) Remove the two screws holding the horn assembly to the vehicle (Fig. 2).

NOTE: Both horns are removed the same way after the wheelhouse splash shield has been removed.

INSTALLATION

(1) Install the two screws holding the horn assembly to the vehicle.

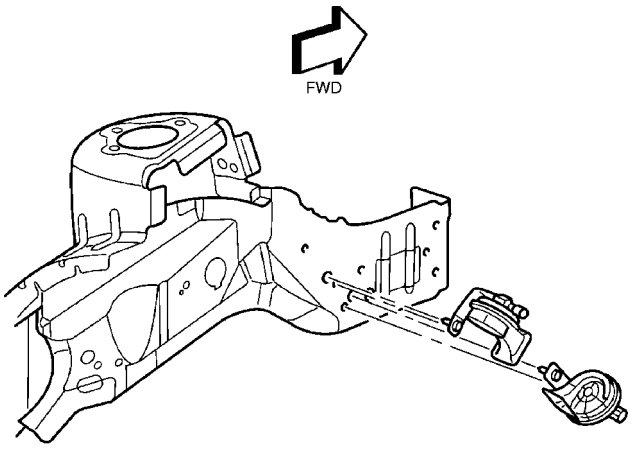

80c4b783

Fig. 2 Horn Assembly Remove/Install

(2) Connect the harness connector.

(3) Install the right front wheelhouse splash shield.

(4) Connect the battery negative cable.

HORN RELAY

DIAGNOSIS AND TESTING - HORN RELAY

(1) Remove horn relay (Refer to 8 - ELECTRICAL/ HORN/HORN RELAY - REMOVAL).

(2) Using ohmmeter, test between relay connector terminals 85 to 86 for 75 ± 8 ohms resistance. If resistance not OK, replace relay (Fig. 3).

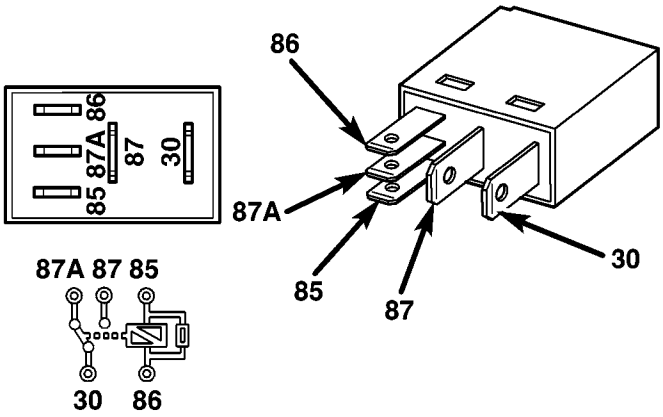

80ce807b

Fig. 3 Horn Relay

30 - COMMON FEED
85 - COIL GROUND
86 - COIL BATTERY
87 - NORMALLY OPEN
87A - NORMALLY CLOSED

HORN RELAY (Continued)

(3) Test for continuity between ground and terminal 85 of horn relay.

(a) When the horn switch is not depressed, no continuity should be present.

(b) Continuity to ground when horn switch is depressed.

(c) If continuity is not correct replace horn switch or wiring as necessary, refer to the appropriate wiring information. The wiring information includes wiring diagrams, proper wire and connector repair procedures, details of wire harness routing and retention, connector pin-out information and location views for the various wire harness connectors, splices and grounds.

(4) Using voltmeter, test voltage at:

(a) Terminals 30 and 86 of the horn relay to body ground.

(b) If NO voltage check fuse 3 of the Junction Block (JB).

(c) If incorrect voltage, repair as necessary. Refer to the appropriate wiring information. The wiring information includes wiring diagrams, proper wire and connector repair procedures, details of wire harness routing and retention, connector pin-out information and location views for the various wire harness connectors, splices and grounds.

(5) Insert a jumper wire between terminal 30 and 87 of the Junction Block (JB).

(a) If horn sounds replace relay.

(b) If the horn does not sound, install horn relay and test horn (Refer to 8 - ELECTRICAL/HORN/HORN - DIAGNOSIS AND TESTING).

REMOVAL

(1) Disconnect and isolate the battery negative cable.

(2) Remove cover from Power Distribution Center (PDC).

(3) Using special tool C-4817, grip the relay by the sides and pull upward with an even effort (Fig. 4).

INSTALLATION

(1) Align relay with Power Distribution Center (PDC) and press into position.

(2) Install cover to PDC.

(3) Connect battery negative cable.

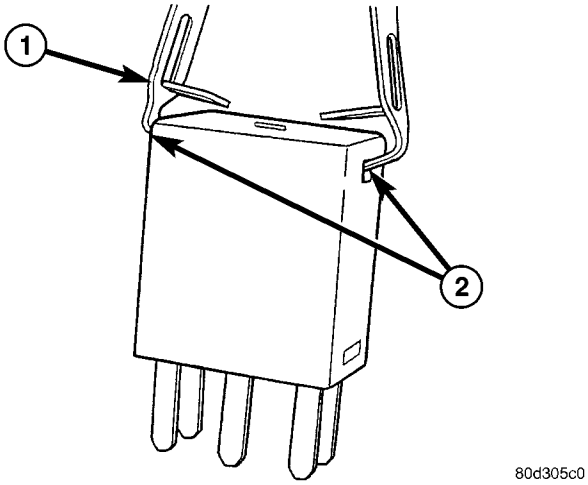

Fig. 4 RELAY REMOVAL

1 - SPECIAL TOOL C-4817
2 - RELAY

HORN SWITCH

DESCRIPTION

The horn switch is mounted inside the driver airbag.

OPERATION

When the Driver Airbag Cover is pressed, the horn switch makes contact to ground. The ground signal is carried to the horn relay and the horn sounds. The horn switch grounds to the airbag housing.

REMOVAL

WARNING:
ON VEHICLES EQUIPPED WITH AN AIRBAG, REFER TO RESTRAINT SYSTEMS FOR WARNINGS AND CAUTIONS BEFORE SERVICING THE HORN SWITCH.

The horn switch is serviced with the driver airbag (Refer to 8 - ELECTRICAL/RESTRAINTS/DRIVER AIRBAG - REMOVAL).

IGNITION CONTROL

TABLE OF CONTENTS

page

IGNITION CONTROL
DESCRIPTION - IGNITION SYSTEM 1
OPERATION - IGNITION SYSTEM 1
SPECIFICATIONS
FIRING ORDER—1.6/2.0L 2
TORQUE 2
IGNITION COILS 3
SPARK PLUGS 3
SPARK PLUG CABLE RESISTANCE 3
SPECIAL TOOLS - EXPORT 3
AUTO SHUT DOWN RELAY
DESCRIPTION 3
OPERATION 3
CAMSHAFT POSITION SENSOR
DESCRIPTION 4
OPERATION 4
REMOVAL
REMOVAL - 2.0/2.4L 5
REMOVAL - 1.6L 6
INSTALLATION
INSTALLATION - 2.0/2.4L 6
INSTALLATION - 1.6L 6
IGNITION COIL
DESCRIPTION 6
OPERATION 6
REMOVAL
REMOVAL - 1.6L 7
REMOVAL - 2.0/2.4L 8
REMOVAL - 2.4L TURBO 9
INSTALLATION
INSTALLATION - 1.6L 10
INSTALLATION- 2.0/2.4L 10
INSTALLATION - 2.4L TURBO 11
IGNITION COIL CAPACITOR
REMOVAL - 2.4L TURBO 11
INSTALLATION - 2.4L TURBO 11
KNOCK SENSOR
DESCRIPTION 11
OPERATION 11
REMOVAL
REMOVAL - 1.6L 12
REMOVAL - 2.0/2.4L 12
INSTALLATION
INSTALLATION - 1.6L 12
INSTALLATION - 2.0/2.4L 12
SPARK PLUG
REMOVAL
REMOVAL - 1.6L 13
REMOVAL - 2.0/2.4L 13
REMOVAL - 2.4L TURBO 13
INSTALLATION
INSTALLATION - 1.6L 13
INSTALLATION - 2.0/2.4L 14
INSTALLATION - 2.4L TURBO 14
SPARK PLUG CABLE
DESCRIPTION 14
REMOVAL
REMOVAL - 1.6L 15
REMOVAL - 2.0/2.4L 15
INSTALLATION
INSTALLATION - 1.6L 15
INSTALLATION - 2.0/2.4L 15

IGNITION CONTROL

DESCRIPTION - IGNITION SYSTEM

NOTE: All engines use a fixed ignition timing system. Basic ignition timing is not adjustable. All spark advance is determined by the Powertrain Control Module (PCM).

The distributorless ignition system used on these engines is referred to as the Direct Ignition System (DIS). The system's three main components are the coils, crankshaft position sensor, and camshaft position sensor. If equipped with the coil on plug ignition system it utilizes an ignition coil for every cylinder, it is mounted directly over the each spark plug.

OPERATION - IGNITION SYSTEM

The crankshaft position sensor and camshaft position sensor are hall effect devices. The camshaft position sensor and crankshaft position sensor generate pulses that are inputs to the PCM. The PCM determines engine position from these sensors. The PCM calculates injector sequence and ignition timing from crankshaft & camshaft position. For a description of both sensors, refer to Camshaft Position Sensor and Crankshaft Position Sensor.

IGNITION CONTROL (Continued)

SPECIFICATIONS

FIRING ORDER—1.6/2.0L

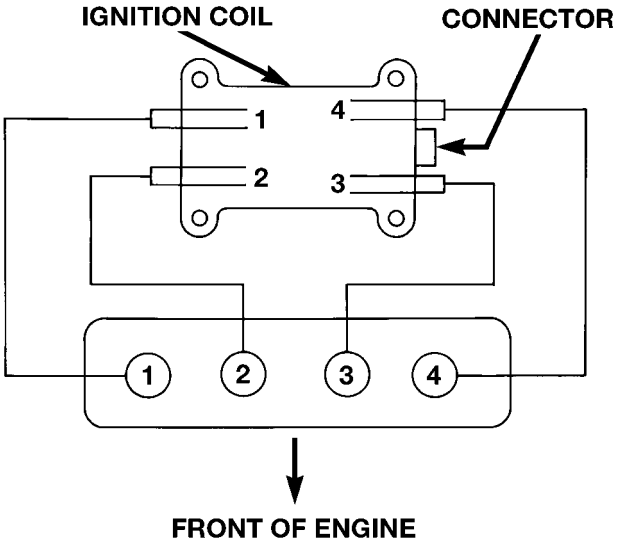

FIRING ORDER 1-3-4-2 8008a549

TORQUE

DESCRIPTION	N·m	Ft. Lbs.	In. Lbs.
2.0/2.4L Camshaft Position Sensor Screw	13		115
Cam Magnet/Target	3.6		32
2.0/2.4L Crankshaft Position Sensor Screw	9		80
1.6L Cam/Crank Sensor Screw	9		80
Coolant Temp. Sensor	18.6		165
Ignition Coil to Cyl. Head	11.8		105
Knock Sensor Bolt	22		195
2.0/2.4L Spark Plugs *	17.6 ±2	13 ±2	
1.6L Spark Plugs	27 ±2.7	20 ±2	
* Tapered seat plugs. Imperative that toque is NOT EXCEEDED.			

IGNITION CONTROL (Continued)

IGNITION COILS

Engines	Coil Manufacture	Primary Resistance at 21°C-27°C (70°F-80°F)	Secondary Resistance at 21°C-27°C (70°F-80°F)
2.4L	Toyodenso/ Diamond	0.45 TO 0.65 Ohms	11,500 to 14,700 Ohms

SPARK PLUGS

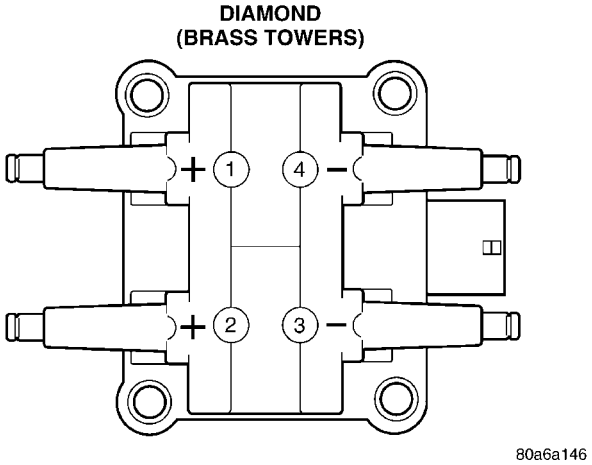

Coil Polarity

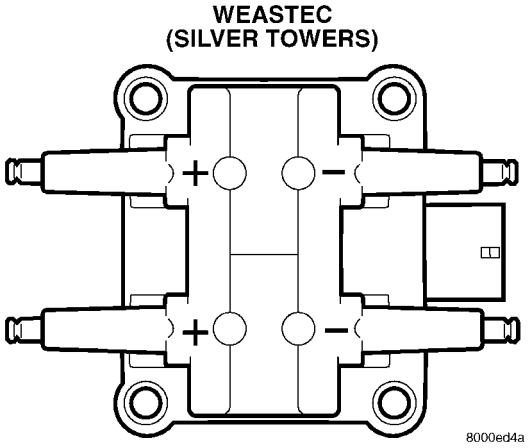

Coil Polarity

ENGINE	PLUG TYPE	ELECTRODE GAP
1.6L	RC9MCC	0.84 to 0.97 mm (0.033 to 0.038 in.)
2.4L	RE14MCC5	1.24 to 1.37 mm (0.048 to 0.053 in.)

SPARK PLUG CABLE RESISTANCE

1.6L

CABLE	RESISTANCE
#1	2790 ohms— 8680 ohms
#2	2400 ohms— 7530 ohms
#3	3430 ohms— 10,600 ohms
#4	3680 ohms— 11,340 ohms

2.0L

CABLE	RESISTANCE
#1,#4	2900 ohms— 9000 ohms
#2,#3	2290 ohms— 7300 ohms

SPECIAL TOOLS - EXPORT

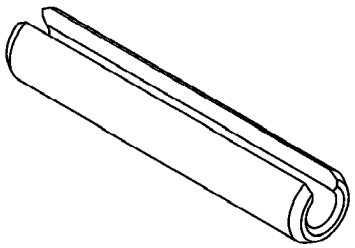

PROTECTIVE SLEEVE

AUTO SHUT DOWN RELAY

DESCRIPTION

The relay is located in the Power Distribution Center (PDC). For the location of the relay within the PDC, refer to the PDC cover for location. Check electrical terminals for corrosion and repair as necessary

OPERATION

The ASD sense circuit (SBEC vehicles) or the engine switched battery (NGC vehicles) informs the PCM when the ASD relay energizes. A 12 volt signal at this input indicates to the PCM that the ASD has been activated. This input is also used to power certain drivers on NGC vehicles.

AUTO SHUT DOWN RELAY (Continued)

When energized, the ASD relay on SBEC vehicles supplies battery voltage to the fuel injectors, ignition coils and the heating element in each oxygen sensor.

When energized, the ASD relay on NGC vehicles provides power to operate the injectors, ignition coil, generator field, O2 sensor heaters (both upstream and downstream), evaporative purge solenoid, EGR solenoid (if equipped) wastegate solenoid (if equipped), and NVLD solenoid (if equipped).

For both SBEC and NGC vehicles, the ASD relay also provides a sense circuit to the PCM for diagnostic purposes. If the PCM does not receive 12 volts from this input after grounding the control side of the ASD relay, it sets a Diagnostic Trouble Code (DTC). The PCM energizes the ASD any time there is an engine speed that exceeds a predetermined value (typically about 50 rpm). The ASD relay can also be energized after the engine has been turned off to perform an O2 sensor heater test, if vehicle is equipped with OBD II diagnostics.

As mentioned earlier, the PCM energizes the ASD relay during an O2 sensor heater test. This test is performed only after the engine has been shut off for SBEC vehicles. On NGC vehicles it checks the O2 heater upon vehicle start. The PCM still operates internally to perform several checks, including monitoring the O2 sensor heaters.

CAMSHAFT POSITION SENSOR

DESCRIPTION

On 2.0/2.4L engines the camshaft position sensor is mounted to the rear of the cylinder head (Fig. 1), (Fig. 2),. On 1.6L engines it is mounted on the front side of the cylinder head.

OPERATION

The PCM sends approximately 5 volts to the Hall-effect sensor. This voltage is required to operate the Hall-effect chip and the electronics inside the sensor. The input to the PCM occurs on a 5 volt output reference circuit. A ground for the sensor is provided through the sensor return circuit. The PCM identifies camshaft position by registering the change from 5 to 0 volts, as signaled from the Camshaft Position sensor (Fig. 3).

On 2.0/2.4L engines a target magnet attaches to the rear of the camshaft and indexes to the correct position. The target magnet has fourteen different poles arranged in an asymmetrical pattern. As the target magnet rotates, the camshaft position sensor senses the change in polarity (Fig. 5) and (Fig. 4).

The PCM determines fuel injection synchronization and cylinder identification from inputs provided by the camshaft position sensor (Fig. 1) and crankshaft position sensor. From the two inputs, the PCM determines crankshaft position.

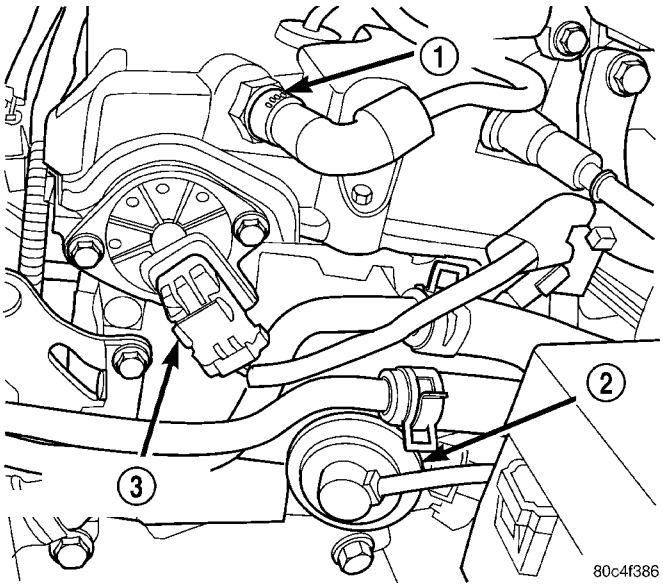

Fig. 1 Camshaft Position Sensor -2.0/2.4L DOHC

1 - PCV VALVE
2 - EGR VALVE
3 - CAMSHAFT POSITION SENSOR

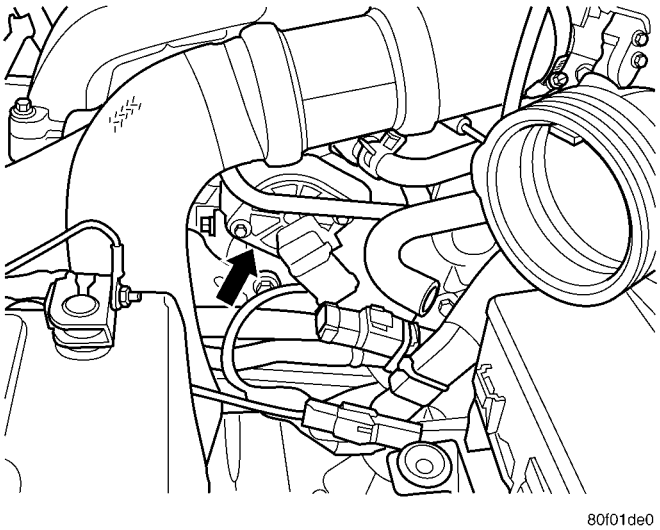

Fig. 2 CAMSHAFT POSITION SENSOR - 2.4L TURBO

The sensor input switches from high (5 volts) to low (0.30 volts) as the target magnet rotates. When the north pole of the target magnet passes under the sensor, the output switches high. The sensor output switches low when the south pole of the target magnet passes underneath.

On 1.6L a raised platform on the cam sprocket serves as a target. When the sensor detects the step, the input voltage from the sensor to the PCM

CAMSHAFT POSITION SENSOR (Continued)

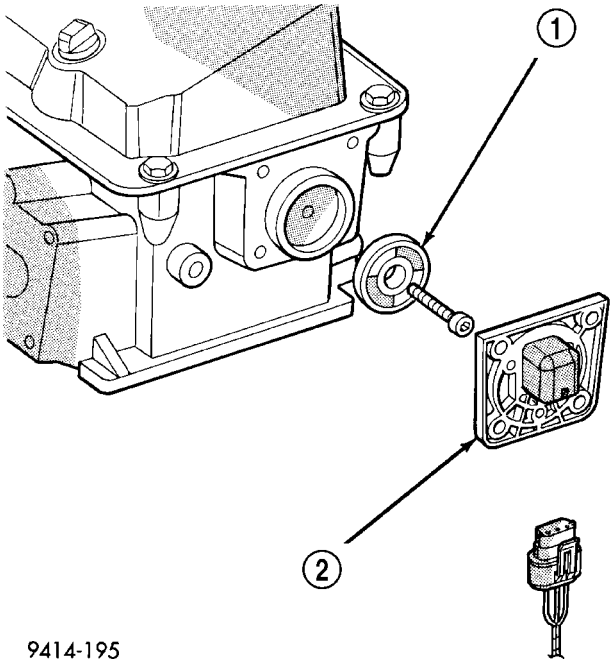

Fig. 3 Target Magnet - Typical

1 - CAM MAGNET/TARGET
2 - CAMSHAFT POSITION SENSOR

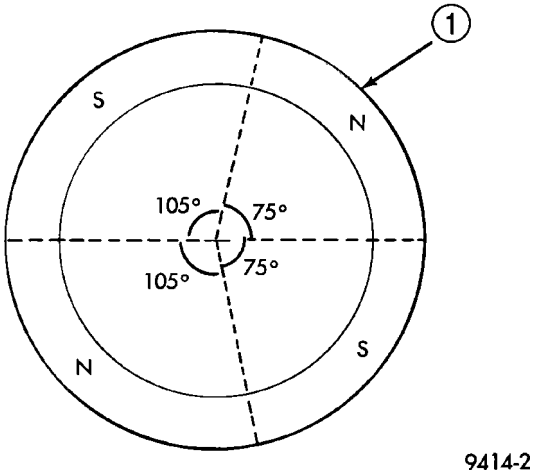

Fig. 4 Target Magnet Polarity

1 - TARGET MAGNET

switches from high (5 volts) to low (0.3 volts). As the step returns away from the sensor, the input voltage switches back to high (5 volts).

REMOVAL

REMOVAL - 2.0/2.4L

(1) Remove the air cleaner lid, disconnect the inlet air temperature sensor and makeup air hose.

(2) Remove the negative battery cable.

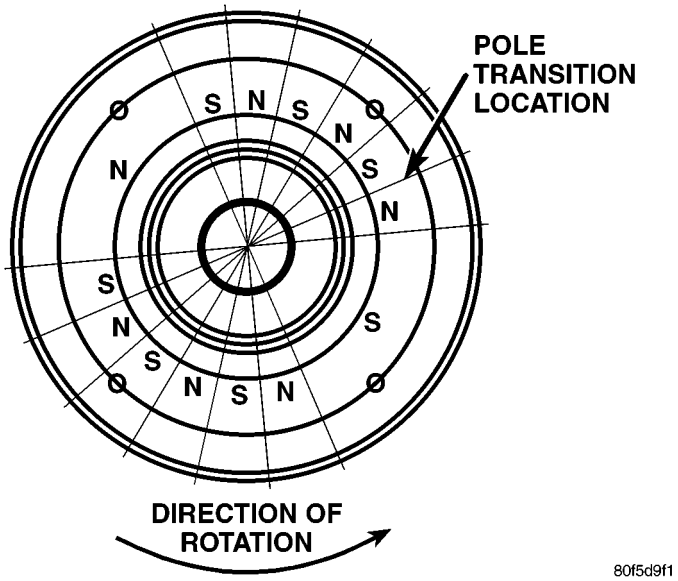

Fig. 5 Target Magnet Polarity - NGC

1 - TARGET MAGNET

(3) Disconnect electrical connector from camshaft position sensor.

(4) Remove camshaft position sensor mounting screws. Remove sensor.

(5) Loosen screw attaching target magnet to rear of camshaft (Fig. 6).

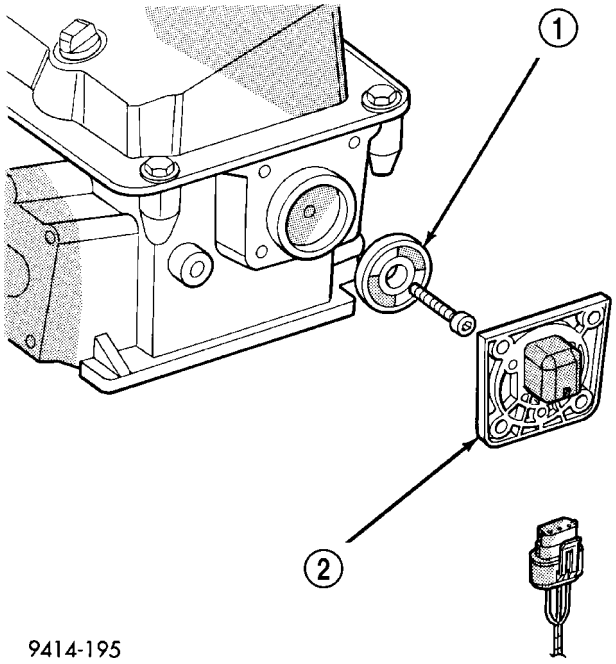

Fig. 6 Target Magnet Removal/Installation

1 - CAM MAGNET/TARGET
2 - CAMSHAFT POSITION SENSOR

CAMSHAFT POSITION SENSOR (Continued)

REMOVAL - 1.6L

(1) Disconnect the negative battery cable.
(2) Relocate the power steering return hose.
(3) Disconnect the electrical connector from the camshaft sensor.
(4) Remove 1 screws from sensor.
(5) Remove sensor (Fig. 7).

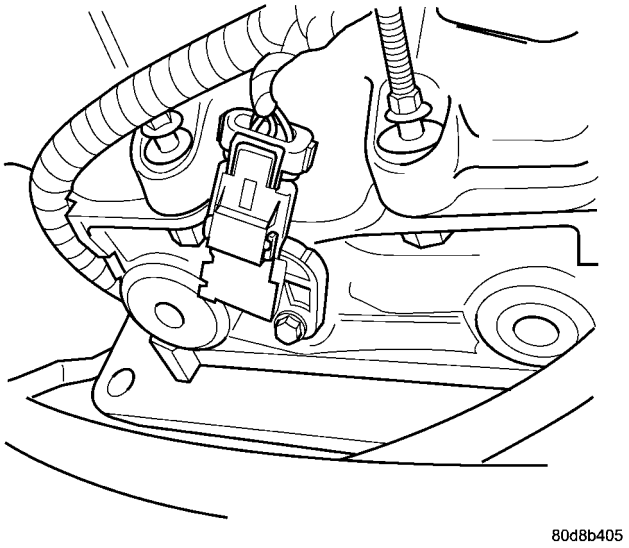

Fig. 7 CAMSHAFT SENSOR LOCATION

INSTALLATION

INSTALLATION - 2.0/2.4L

The target magnet has locating dowels that fit into machined locating holes in the end of the camshaft (Fig. 8).

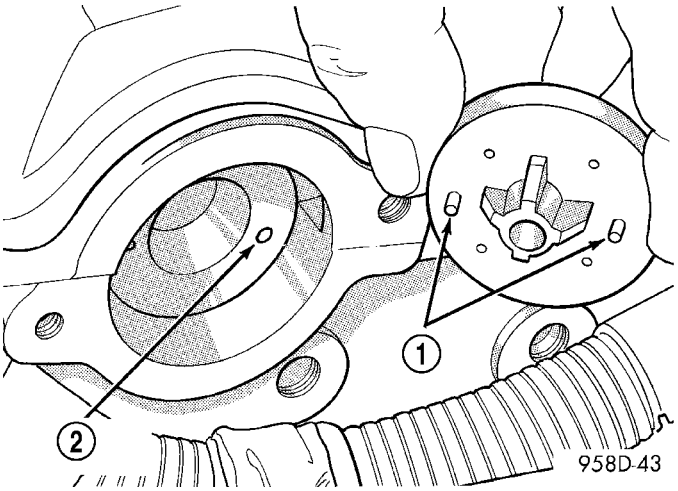

Fig. 8 Target Magnet Installation

1 - LOCATING DOWELS
2 - LOCATING HOLES (2)

(1) Install target magnet in end of camshaft. Tighten mounting screw to 3.6 N·m (32 ±5 in. lbs.) torque. Over torquing could cause cracks in magnet. If magnet cracks replace it.
(2) Install camshaft position sensor. Tighten sensor mounting screws to 9 N·m (80 ±15 in. lbs.) torque.
(3) Carefully attach electrical connector to camshaft position sensor. Installation at an angle may damage the sensor pins.
(4) Install the negative battery cable.
(5) Install the air cleaner lid, connect the inlet air temperature sensor and makeup air hose.

INSTALLATION - 1.6L

(1) Install sensor to cylinder head (Fig. 7).
(2) Tighten screws to 9 N·m (80 in. lbs.).
(3) Connect the electrical connector to the sensor.
(4) Relocate the power steering return line.
(5) Connect the negative battery cable

IGNITION COIL

DESCRIPTION

WARNING: THE DIRECT IGNITION SYSTEM GENERATES APPROXIMATELY 40,000 VOLTS. PERSONAL INJURY COULD RESULT FROM CONTACT WITH THIS SYSTEM.

The coil pack consists of 2 coils molded together. The coil pack is mounted on the valve cover (Fig. 9) or (Fig. 10).

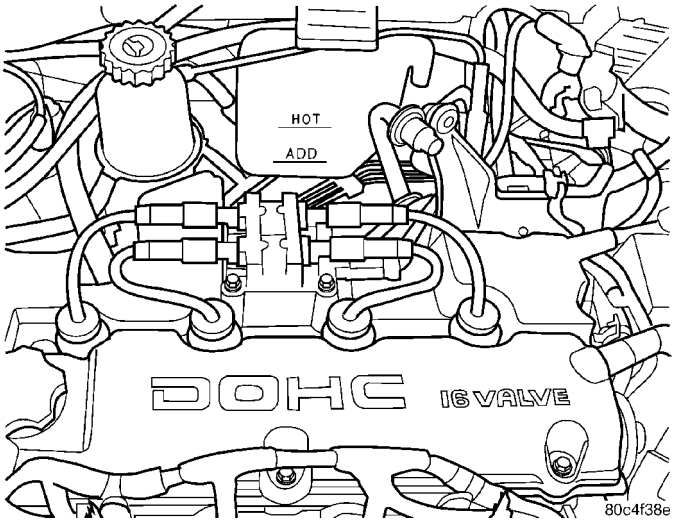

Fig. 9 Ignition Coil Pack—2.0/2.4L

OPERATION

WARNING: THE DIRECT IGNITION SYSTEM GENERATES APPROXIMATELY 40,000 VOLTS. PERSONAL INJURY COULD RESULT FROM CONTACT WITH THIS SYSTEM.

IGNITION COIL (Continued)

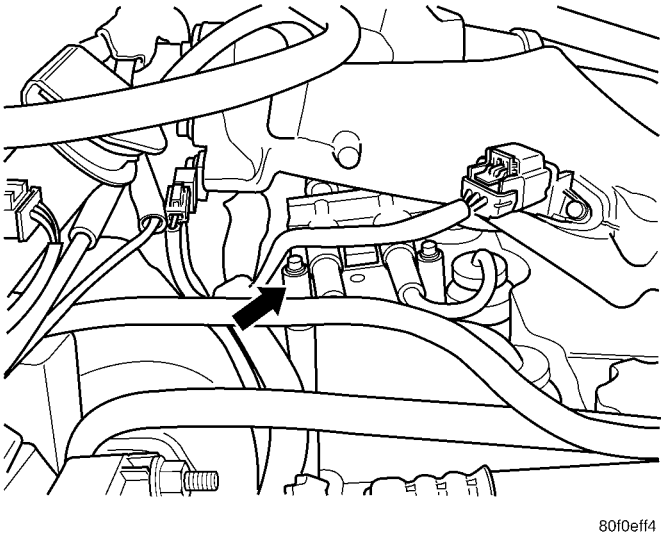

Fig. 10 IGNITION COIL LOCATION - 2.4L TURBO

High tension leads route to each cylinder from the coil. The coil fires two spark plugs every power stroke. One plug is the cylinder under compression, the other cylinder fires on the exhaust stroke. Coil number one fires cylinders 1 and 4. Coil number two fires cylinders 2 and 3. The PCM determines which of the coils to charge and fire at the correct time.

The Auto Shutdown (ASD) relay provides battery voltage to the ignition coil. The PCM provides a ground contact (circuit) for energizing the coil. When the PCM breaks the contact, the energy in the coil primary transfers to the secondary causing the spark. The PCM will de-energize the ASD relay if it does not receive the crankshaft position sensor and camshaft position sensor inputs.

REMOVAL

REMOVAL - 1.6L

NOTE: The 1.6L is attached with a rubber isolator system. Care must be exercised in retaining all the pieces and reinstalling in the order they where removed.

(1) Remove air cleaner assembly cover and disconnect the inlet air temperature sensor (Fig. 11).

(2) Disconnect the negative battery cable.

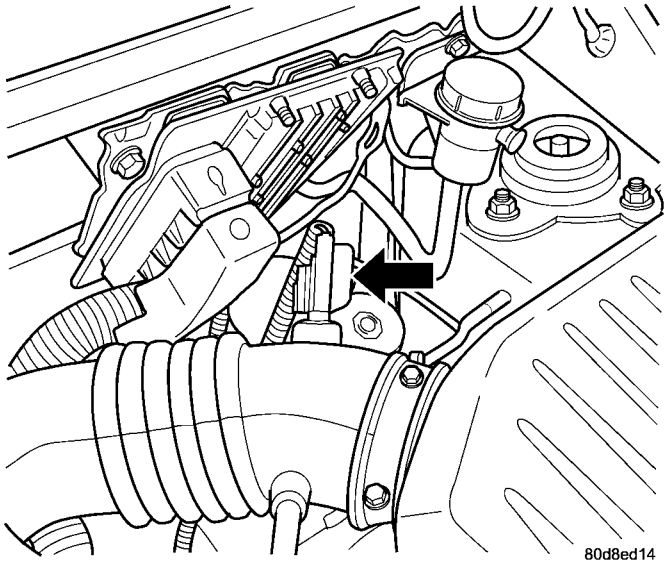

Fig. 11 INLET AIR TEMP. SENSOR

(3) Disconnect the electrical connector at the throttle body.

(4) Remove the purge hose from throttle body.

(5) Remove the 4 bolts from the upper to lower manifold (Fig. 12).

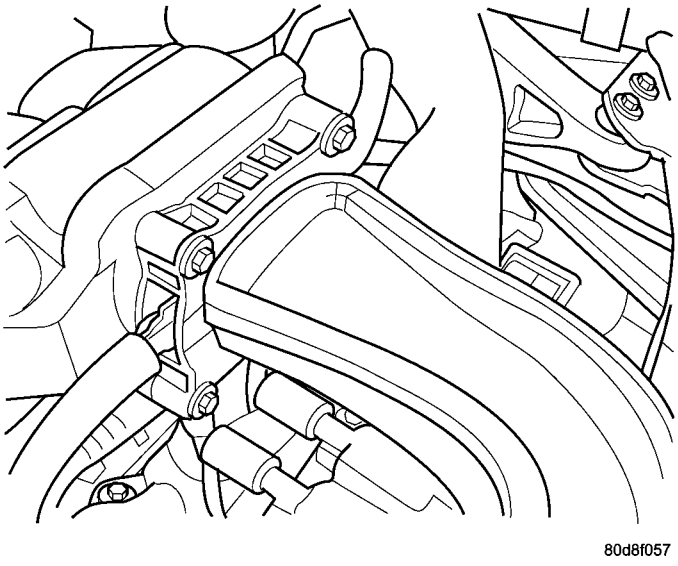

Fig. 12 UPPER MANIFOLD BOLTS

IGNITION COIL (Continued)

(6) Remove the 2 bolts to the upper manifold to struts (Fig. 13) and (Fig. 14).

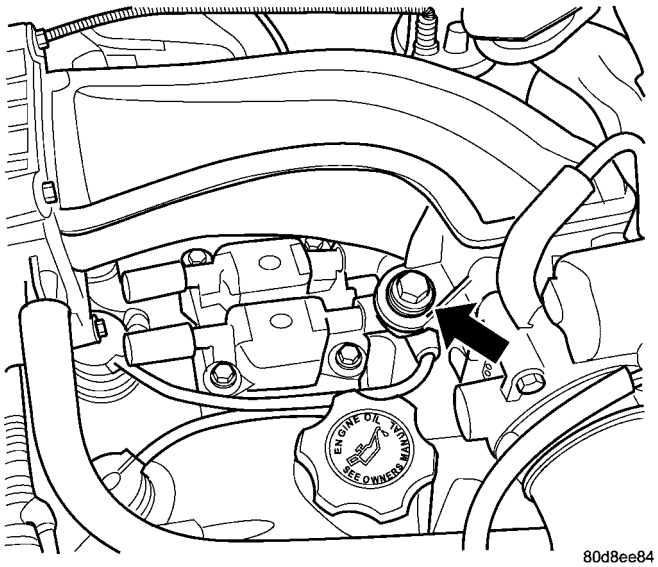

Fig. 13 FRONT STRUT BOLTS UPPER INTAKE

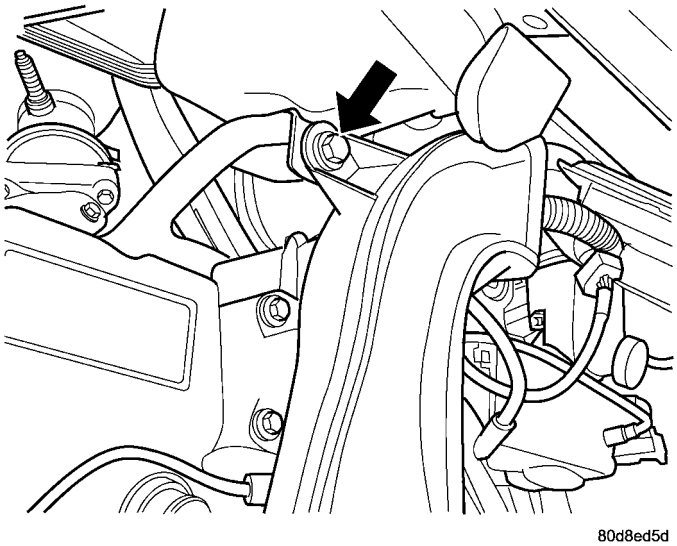

Fig. 14 REAR STRUT BOLTS UPPER INTAKE

(7) Remove the PCV hose and the brake booster hose from the upper manifold

(8) Remove the 4 bolts from the ignition coil (Fig. 15).

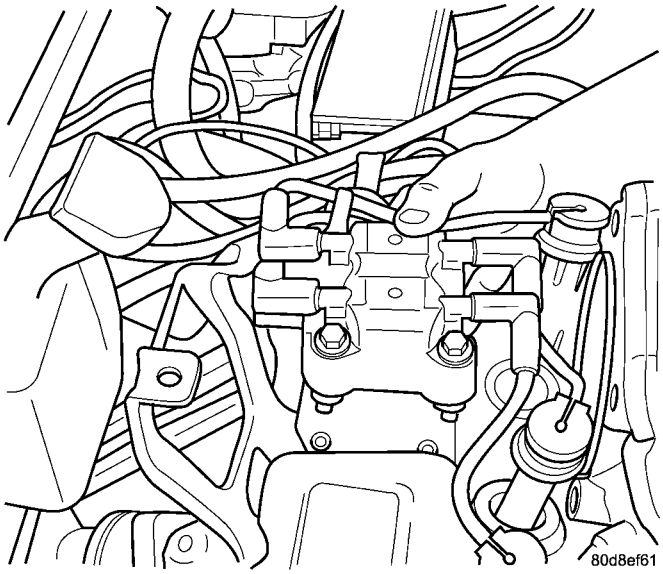

Fig. 15 IGNITION COIL

(9) Remove the spark plug cables from the ignition coil.

REMOVAL - 2.0/2.4L

The electronic ignition coil pack attaches directly to the valve cover (Fig. 16).

(1) Remove the negative battery cable.
(2) Disconnect electrical connector from coil pack.
(3) Remove coil pack mounting nuts.
(4) Remove coil pack.

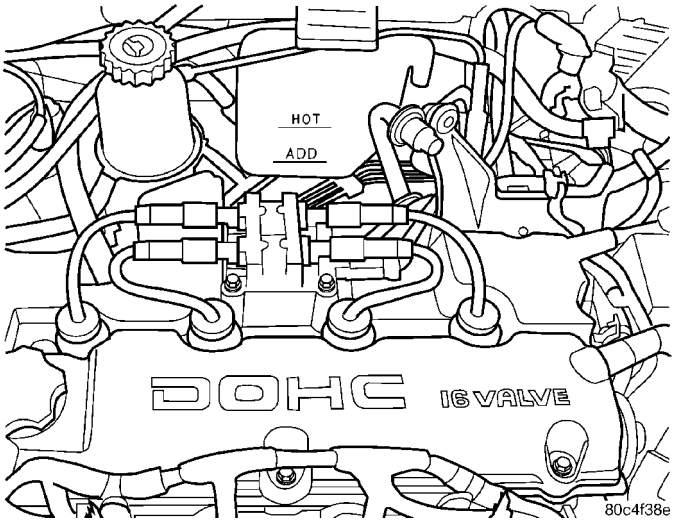

Fig. 16 Electronic Ignition Coil Pack—2.4L

IGNITION COIL (Continued)

REMOVAL - 2.4L TURBO

(1) Disconnect the negative battery cable.
(2) Remove the throttle control shield (Fig. 17).

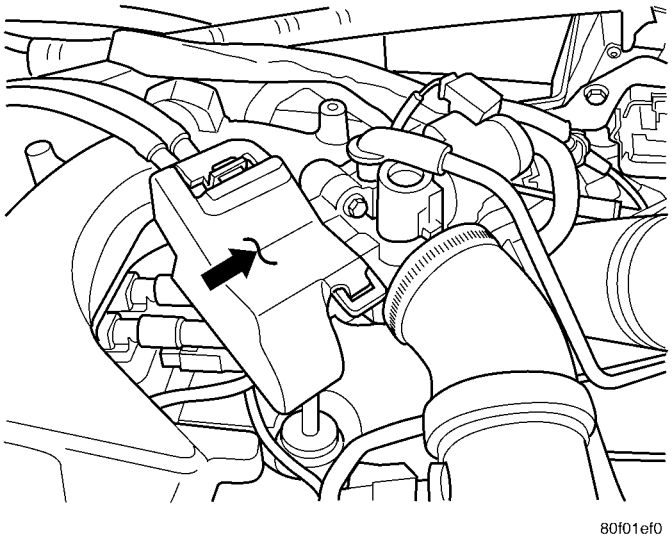

Fig. 17 THROTTLE CONTROL SHIELD

(3) Remove the throttle cables from the throttle body lever (Fig. 18).

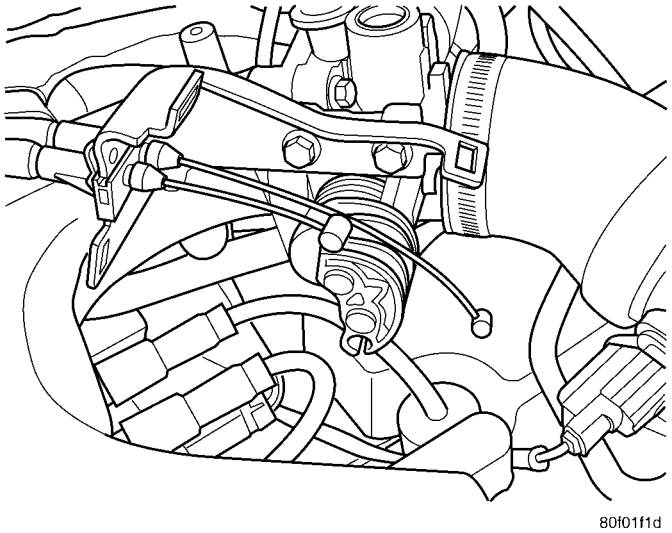

Fig. 18 THROTTLE CABLES

(4) Remove the throttle cable bracket and relocate (Fig. 19).

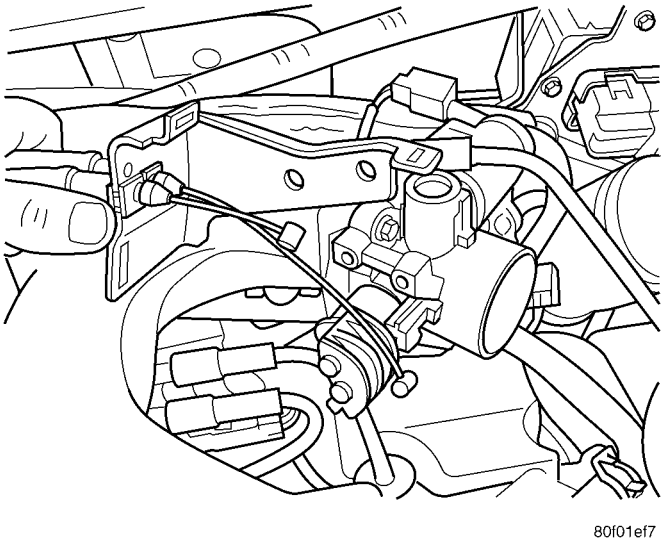

Fig. 19 THROTTLE CABLE BRACKET

(5) Remove the spark plug cables from the ignition coil.
(6) Unlock and disconnect the electrical connector from the ignition coil.
(7) Remove bolts from ignition coil. Twist coil to remove 2 of the bolts (Fig. 20) from the coil before removing it from vehicle.

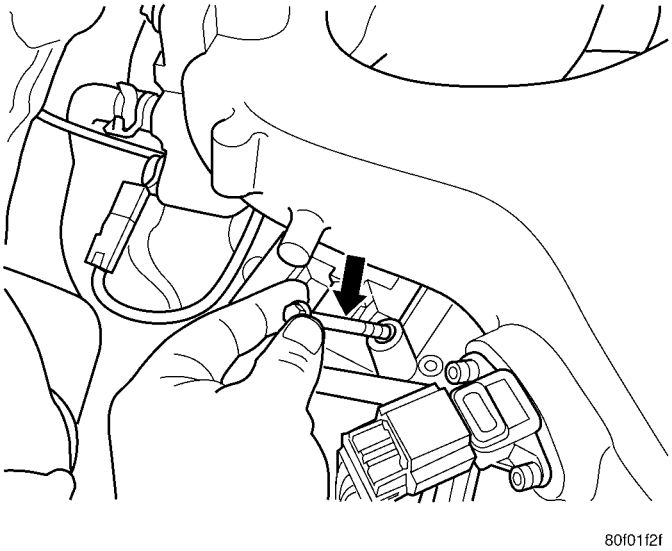

Fig. 20 IGNITION COIL BOLT

IGNITION COIL (Continued)

(8) Pull coil up (Fig. 21) and out by the throttle body side of the intake manifold (Fig. 22).

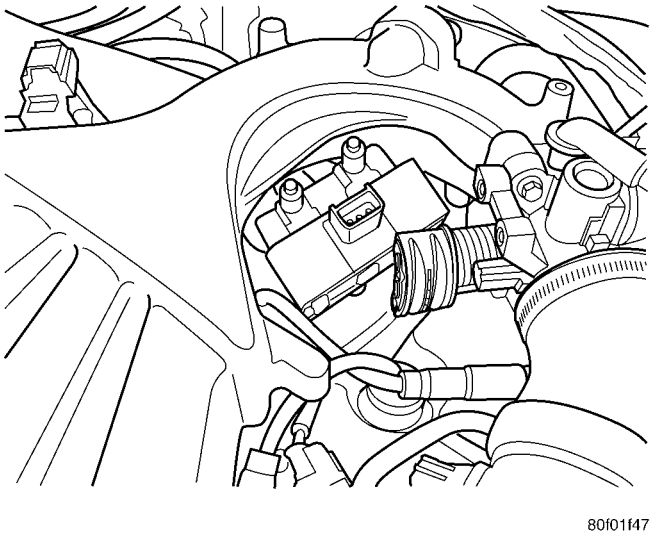

Fig. 21 IGNITION COIL REMOVAL/INSTALLATION

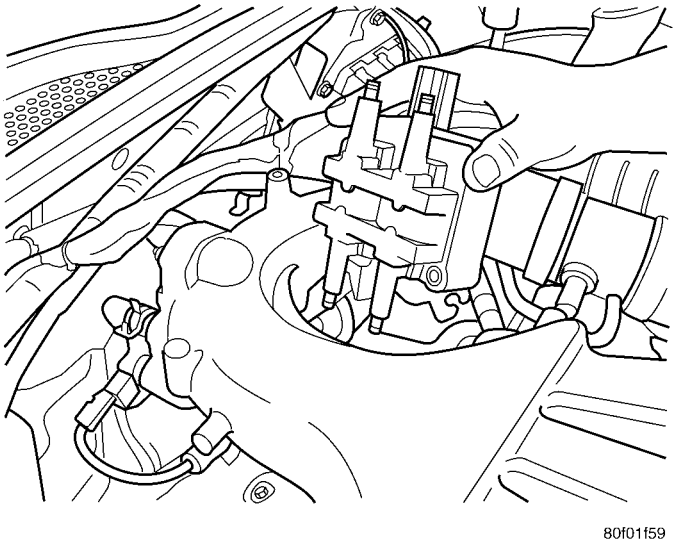

Fig. 22 IGNITION COIL REMOVED

INSTALLATION

INSTALLATION - 1.6L

(1) Install coil and insulators (Fig. 23).

(2) Tighten bolts to 12 N·m (105 ±20 in. lbs.).

(3) Install gasket to upper intake manifold (Fig. 24) and (Fig. 25).

(4) Install the 4 bolts from the upper to lower manifold (Fig. 12).

(5) Install the 2 bolts to the upper manifold to struts (Fig. 13) and (Fig. 14).

(6) Install the PCV hose and the brake booster hose to the upper manifold

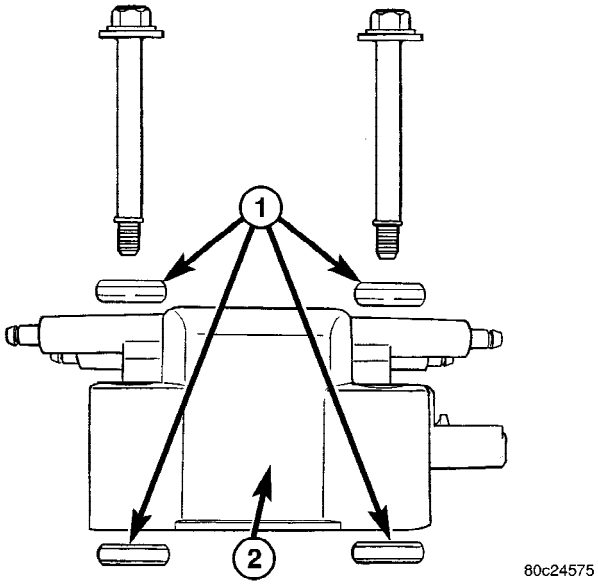

Fig. 23 RUBBER INSULATORS AND COIL

1 - Rubber Insulators
2 - Coil

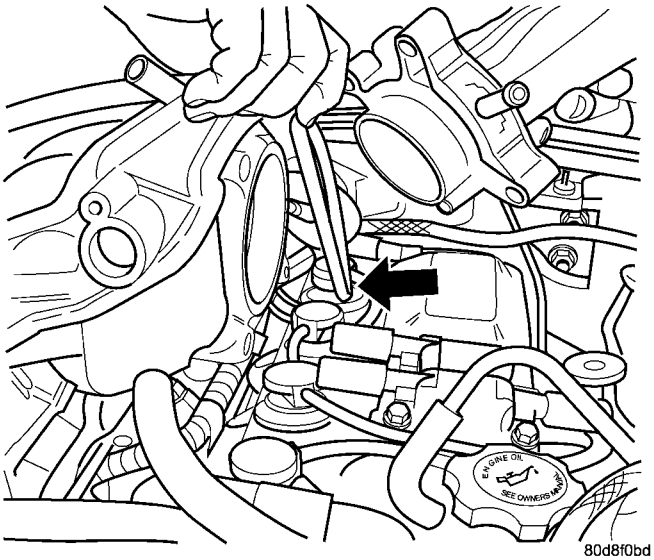

Fig. 24 UPPER INTAKE GASKET

(7) Install the purge hose to throttle body.

(8) Connect the electrical connector to throttle body.

(9) Connect the negative battery cable.

(10) Install air cleaner assembly cover and connect the inlet air temperature sensor (Fig. 11).

INSTALLATION- 2.0/2.4L

The electronic ignition coil pack attaches directly to the valve cover (Fig. 16).

(1) Install coil pack on valve cover. Tighten the bolts to 11.8 N·m (105 ±20 in. lbs.).

IGNITION COIL (Continued)

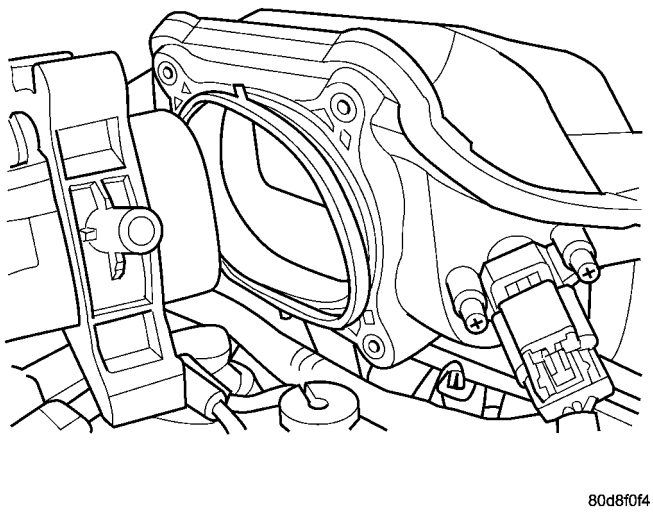

Fig. 25 UPPER INTAKE GASKET INPLACE

(2) Transfer spark plug cables to new coil pack. The coil pack towers are numbered with the cylinder identification. Be sure the ignition cables snap onto the towers.

(3) Install the negative battery cable.

INSTALLATION - 2.4L TURBO

(1) Install the coil on throttle body side of the intake manifold (Fig. 22), rotate down past the throttle body to the valve cover (Fig. 21).

(2) Connect and lock the electrical connector to the ignition coil.

(3) Install bolts to ignition coil. Twist coil to install 2 of the bolts (Fig. 20) to the coil after installing it to vehicle.

(4) Install the spark plug cables to the ignition coil.

(5) Install the throttle cable bracket (Fig. 19).

(6) Install the throttle cables to the throttle body lever (Fig. 18).

(7) Install the throttle control shield (Fig. 17).

(8) Connect the negative battery cable.

NOTE: Check and make sure that throttle body and attachments will not contact ignition cables.

IGNITION COIL CAPACITOR

REMOVAL - 2.4L TURBO

(1) Disconnect the negative battery cable.

(2) Remove the electrical connector from the ignition coil capacitor (Fig. 26).

(3) Remove mounting bolt and remove capacitor (Fig. 26).

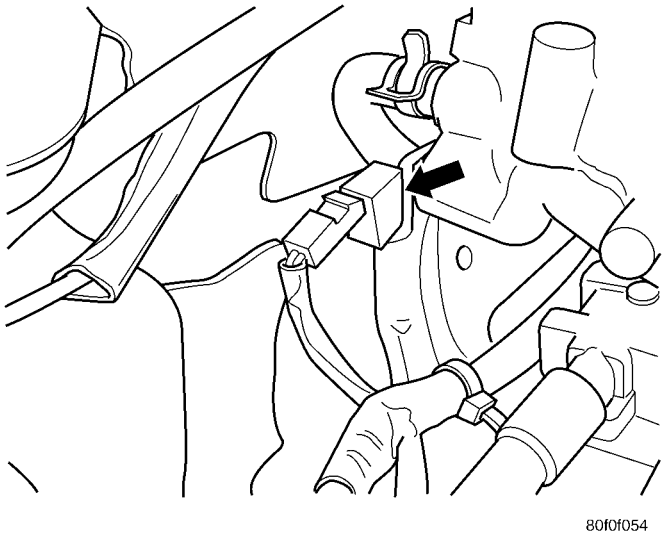

Fig. 26 COIL CAPACITOR - 2.4L TURBO

INSTALLATION - 2.4L TURBO

(1) Install coil capacitor and mounting bolt and tighten to 11.8 N·m (105 in. lbs.).

(2) Connect the electrical connector.

(3) Connect the negative battery cable.

KNOCK SENSOR

DESCRIPTION

The knock sensor is bolted to the cylinder block. The knock sensor is designed to detect engine vibration that is caused by detonation or preignition.

OPERATION

When the knock sensor detects a knock in one of the cylinders, it sends an input signal to the PCM. In response, the PCM retards ignition timing for all cylinders by a scheduled amount.

Knock sensors contain a piezoelectric material which constantly vibrates and sends an input voltage (signal) to the PCM while the engine operates. As the intensity of the crystal's vibration increases, the knock sensor output voltage also increases.

The voltage signal produced by the knock sensor increases with the amplitude of vibration. The PCM receives as an input the knock sensor voltage signal. If the signal rises above a predetermined level, the PCM will store that value in memory and retard ignition timing to reduce engine knock. If the knock sensor voltage exceeds a preset value, the PCM retards ignition timing for all cylinders. It is not a selective cylinder retard.

The PCM ignores knock sensor input during engine idle conditions. Once the engine speed exceeds a specified value, knock retard is allowed.

KNOCK SENSOR (Continued)

Knock retard uses its own short term and long term memory program.

Long term memory stores previous detonation information in its battery-backed RAM. The maximum authority that long term memory has over timing retard can be calibrated.

Short term memory is allowed to retard timing up to a preset amount under all operating conditions (as long as rpm is above the minimum rpm) except WOT. The PCM, using short term memory, can respond quickly to retard timing when engine knock is detected. Short term memory is lost any time the ignition key is turned off.

NOTE: Over or under tightening affects knock sensor performance, possibly causing improper spark control.

REMOVAL

REMOVAL - 1.6L

(1) Remove air cleaner assembly cover.
(2) Disconnect the negative battery cable.
(3) Disconnect the electrical connector for the sensor (Fig. 27) (Fig. 28).

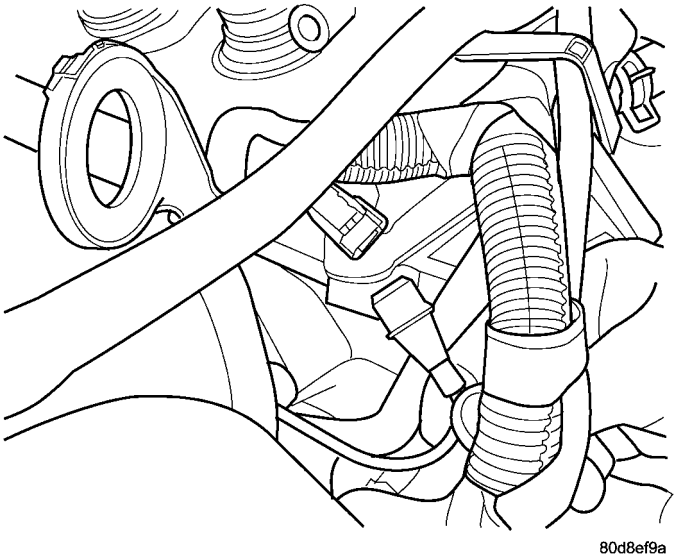

Fig. 27 WIRING CONNECTOR

(4) Remove knock sensor. The knock sensor is located under the intake manifold (Fig. 28).

REMOVAL - 2.0/2.4L

The knock sensor bolts into the side of the cylinder block in front of the starter under the intake manifold.

(1) Disconnect the negative battery cable.

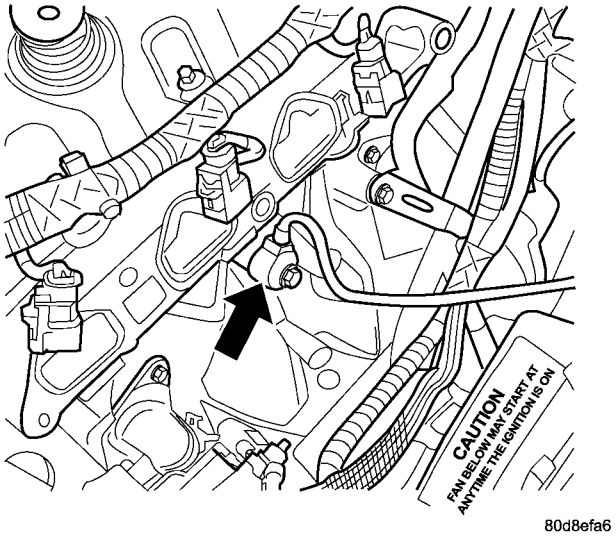

Fig. 28 KNOCK SENSOR

(2) Disconnect electrical connector from knock sensor.
(3) Remove the bolt holding the knock sensor
(4) Remove the knock sensor

INSTALLATION

INSTALLATION - 1.6L

(1) Install the knock sensor (Fig. 28) Tighten knock sensor bolt to 22 N·m (195 in. lbs.) torque. **Over or under tightening effects knock sensor performance resulting in possible improper spark control.**.
(2) Connect the electrical connector for the sensor (Fig. 27).
(3) Connect the negative battery cable.
(4) Install air cleaner assembly cover.

INSTALLATION - 2.0/2.4L

The knock sensor bolts into the side of the cylinder block in front of the starter under the intake manifold.

(1) Install knock sensor. Tighten knock sensor bolt to 22 N·m (195 in. lbs.) torque. **Over or under tightening effects knock sensor performance, possibly causing improper spark control.**
(2) Attach electrical connector to knock sensor.
(3) Connect the negative battery cable.

SPARK PLUG

REMOVAL

REMOVAL - 1.6L

(1) Remove air cleaner assembly cover (Fig. 11).
(2) Disconnect the negative battery cable.
(3) Disconnect the electrical connector at the throttle body.
(4) Remove the purge hose from throttle body.
(5) Remove the 4 bolts from the upper to lower manifold (Fig. 12).
(6) Remove the 2 bolts to the upper manifold to struts (Fig. 13) and (Fig. 14).
(7) Remove the PCV hose and the brake booster hose from the upper manifold
(8) Remove the 4 bolts from the ignition coil.
(9) Remove the spark plug cables from the ignition coil.

Failure to route the cables properly could cause the radio to reproduce ignition noise, cross ignition of the spark plugs or short circuit the cables to ground.

REMOVE CABLES FROM COIL FIRST.

Always remove the spark plug cable by grasping the top of the spark plug insulator, turning the boot 1/2 turn and pulling straight up in a steady motion.

(10) Remove the spark plug using a quality socket with a rubber or foam insert and special tool # 8448 (Fig. 29) on the extension to keep from damaging the spark plug tubes in the cylinder head and valve cover.

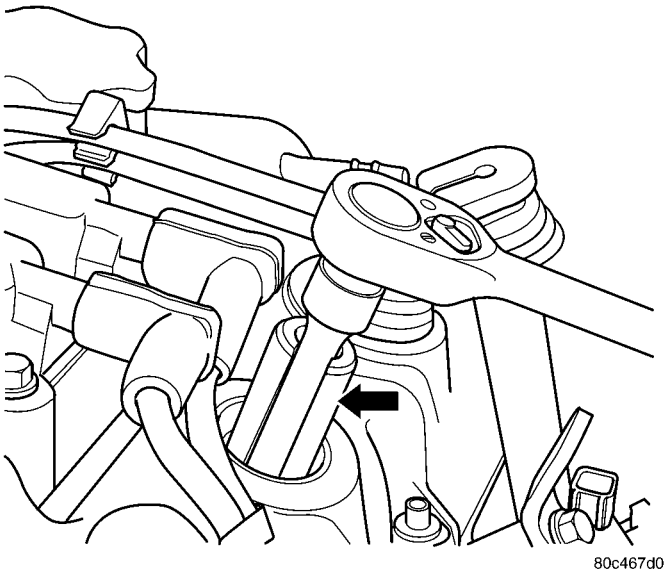

Fig. 29 SPECIAL TOOL # 8448

(11) Inspect the spark plug condition.

REMOVAL - 2.0/2.4L

Failure to route the cables properly could cause the radio to reproduce ignition noise, cross ignition of the spark plugs or short circuit the cables to ground.

NOTE: REMOVE cables from coil first before removing spark plug insulator.

Special care should be used when installing spark plugs in the 2.4L cylinder head spark plug wells. Be sure the plugs do not drop into the wells, damage to the electrodes can occur.

Always tighten spark plugs to the specified torque. Over tightening can cause distortion resulting in a change in the spark plug gap. Overtightening can also damage the cylinder head.

(1) Remove the air cleaner lid, disconnect the inlet air sensor and makeup air hose.
(2) Disconnect the negative battery cable.
(3) Remove the upper intake manifold, refer to the Engine section for more information.
(4) Disconnect the cable from the ignition coil first.

Always remove the spark plug cable by grasping the top of the spark plug insulator, rotate the boot 90° and pulling straight up in a steady motion.

(5) Remove the spark plug using a quality socket with a rubber or foam insert.
(6) Inspect the spark plug condition.

REMOVAL - 2.4L TURBO

Special care should be used when installing spark plugs in the 2.4L cylinder head spark plug wells. Be sure the plugs do not drop into the wells, damage to the electrodes can occur.

NOTE: REMOVE cables from the coil first before removing spark plug insulator.

(1) Disconnect the negative battery cable.
(2) Unlock and disconnect the MAP sensor electrical connector.
(3) Remove the throttle control shield.
(4) Disconnect the cable from the ignition coil first. Always remove the spark plug insulator, rotate the boot 90° and pulling straight up in a steady motion.
(5) Remove the spark plug using a quality socket with a rubber or foam insert (Fig. 30).
(6) Inspect the spark plug condition.

INSTALLATION

INSTALLATION - 1.6L

Failure to route the cables properly could cause the radio to reproduce ignition noise, cross ignition of the spark plugs or short circuit the cables to ground.

SPARK PLUG (Continued)

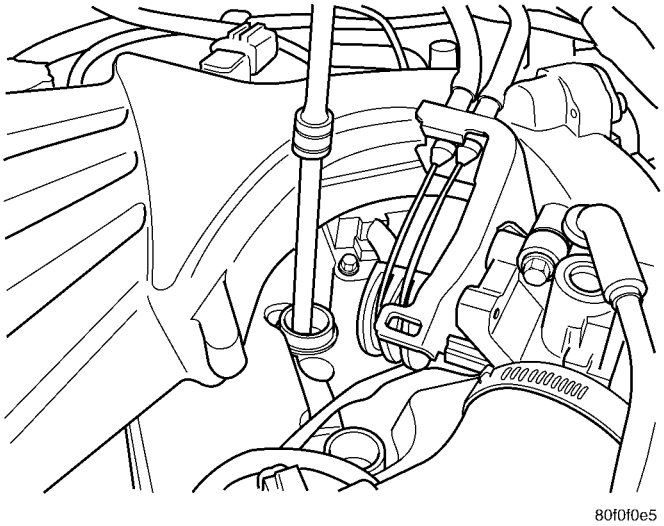

Fig. 30 SPARK PLUG REMOVAL/INSTALLATION - 2.4L TURBO

(1) To avoid cross threading, start the spark plug into the cylinder head by hand.

(2) Use special tool # 8448 to install and tighten the spark plug. Tighten spark plugs to 28 N·m (20 ft. lbs.) torque.

(3) Install spark plug insulators over spark plugs. Ensure the top of the spark plug insulator covers the upper end of the spark plug tube.

(4) Reconnect to cables to coil.

(5) Install the 4 bolts from the upper to lower manifold (Fig. 12).

(6) Install the 2 bolts to the upper manifold to struts (Fig. 13) and (Fig. 14).

(7) Install the PCV hose and the brake booster hose to the upper manifold

(8) Install the purge hose to throttle body.

(9) Connect the electrical connector to throttle body.

(10) Connect the negative battery cable.

(11) Install air cleaner assembly cover and inlet air temperature sensor (Fig. 11).

INSTALLATION - 2.0/2.4L

Failure to route the cables properly could cause the radio to reproduce ignition noise, cross ignition of the spark plugs or short circuit the cables to ground.

NOTE: REMOVE cables from coil first before removing spark plug insulator.

Special care should be used when installing spark plugs in the 2.4L cylinder head spark plug wells. Be sure the plugs do not drop into the wells, damage to the electrodes can occur.

Always tighten spark plugs to the specified torque. Over tightening can cause distortion resulting in a change in the spark plug gap. Overtightening can also damage the cylinder head.

(1) To avoid cross threading, start the spark plug into the cylinder head by hand.

WARNING: The tapered seat plugs for this application are torque-critical! It is imperative that 17.6 N·m +/- 2 (13 +/- 2 ft. lbs.) is NOT exceeded!

(2) Tighten spark plugs to 17.6 +/- 2 N·m (13 +/- 2 ft. lbs.) torque.

(3) Install spark plug insulators over spark plugs. Ensure the top of the spark plug insulator covers the upper end of the spark plug tube.

(4) Install spark plug cable to coil.

(5) Install the upper intake manifold, refer to the Engine section for more information

(6) Connect the negative battery cable.

(7) Install the air cleaner lid and connect the inlet air temperature sensor and makeup hose.

INSTALLATION - 2.4L TURBO

Special care should be used when installing spark plugs in the 2.4L cylinder head spark plug wells. Be sure the plugs do not drop into the wells, damage to the electrodes can occur.

NOTE: INSTALL cables to the spark plug first before installing them to the ignition coil.

(1) Install the spark plug using a quality socket with a rubber or foam insert. Tighten plus to N·m 17.6 ±2 (13 ±2 ft. lbs.). DO NOT OVER TIGHTEN, it is imperative that the torque is NOT EXCEEDED.

(2) Install the throttle control shield.

(3) Connect and lock the MAP sensor electrical connector.

(4) Connect the negative battery cable.

SPARK PLUG CABLE

DESCRIPTION

Spark Plug cables are sometimes referred to as secondary ignition wires. The wires transfer electrical current from the ignition coil pack to individual spark plugs at each cylinder. The resistive spark plug cables are of nonmetallic construction. The cables provide suppression of radio frequency emissions from the ignition system.

Check the spark plug cable connections for good contact at the coil, and spark plugs. Terminals should be fully seated. The insulators should be in good condition and should fit tightly on the coil, and spark

SPARK PLUG CABLE (Continued)

plugs. Spark plug cables with insulators that are cracked or torn must be replaced.

Clean Spark Plug cables with a cloth moistened with a non-flammable solvent. Wipe the cables dry. Check for brittle or cracked insulation. The spark plug cables and spark plug boots are made from high temperature materials.

REMOVAL

REMOVAL - 1.6L

Failure to route the cables properly could cause the radio to reproduce ignition noise, cross ignition of the spark plugs or short circuit the cables to ground.

Remove spark plug cable from coil first.

Always remove the spark plug cable by grasping the top of the spark plug insulator, turning the boot 1/2 turn and pulling straight up in a steady motion.

REMOVAL - 2.0/2.4L

Failure to route the cables properly could cause the radio to reproduce ignition noise, cross ignition of the spark plugs or short circuit the cables to ground.

Remove spark plug cable from coil first.

Always remove the spark plug cable by grasping the top of the spark plug insulator, turning the boot 1/2 turn and pulling straight up in a steady motion.

INSTALLATION

INSTALLATION - 1.6L

Failure to route the cables properly could cause the radio to reproduce ignition noise, cross ignition of the spark plugs or short circuit the cables to ground. Install spark plug insulators over spark plugs. Ensure the top of the spark plug insulator covers the upper end of the spark plug tube, then connect the other end to coil pack.

INSTALLATION - 2.0/2.4L

Failure to route the cables properly could cause the radio to reproduce ignition noise, cross ignition of the spark plugs or short circuit the cables to ground. Install spark plug insulators over spark plugs. Ensure the top of the spark plug insulator covers the upper end of the spark plug tube, then connect the other end to coil pack.

INSTRUMENT CLUSTER

TABLE OF CONTENTS

page

INSTRUMENT CLUSTER
DESCRIPTION 1
OPERATION 2
DIAGNOSIS AND TESTING
DIAGNOSIS AND TESTING - INSTRUMENT CLUSTER WARNING/INDICATOR LAMPS 3
DIAGNOSIS AND TESTING - MULTIPLE/ INDIVIDUAL GAUGES INOPERATIVE 3
STANDARD PROCEDURE - SELF-DIAGNOSTICS 4
REMOVAL 4
INSTALLATION 5
CLUSTER MASK/LENS
REMOVAL 5
INSTALLATION 5

INSTRUMENT CLUSTER

DESCRIPTION

The instrument cluster electronically drives the speedometer, odometer, fuel/temperature gauges, and tachometer. On the back of the cluster are two self-docking connectors, a 26-way and a 10-way.

All the indicators are located within the three gauges:

- Speedometer
- Tachometer
- Fuel/Temperature Gauge

This is a smart cluster and used to control many Body Control Module (BCM) functions.

The purpose of the instrument cluster gauges and indicator lamps is to keep the driver informed about the operating condition of the vehicle. If an abnormal condition occurs, the driver is informed by indicator lamp and a chime. The driver can seek service before damage occurs.

The instrument cluster has warning lamps and indicators for the following systems:

- Airbag
- Anti-lock Brakes (ABS) if equipped
- Brake Warning
- Charging System
- Electronic Throttle Control (ETC) (1.6L only)
- Engine Temperature
- Front Fog Lamps (if equipped)
- High Beam
- Liftgate Ajar
- Low Fuel
- Low Oil Pressure
- Malfunction Indicator Lamp (MIL) (Service Engine Soon)
- Rear Fog Lamps (Export)
- Seat Belt Warning
- Security System
- Trac-Off (if equipped)
- Wait To Start (Diesel Export Only)

The instrument cluster has a Vacuum Fluorescent (VF) display for the following systems:

- Cruise
- Door (ajar)
- Odometer
- Trac (if equipped)
- Trip
- PRNDL (Autostick Only)

CHIME

The functions previously performed by the chime module are now part of the smart cluster. There is no serviceable part of the instrument cluster chime function. Replacement of the instrument cluster is necessary.

KEY IN IGNITION SWITCH

The Key-in switch is built into the ignition switch assembly. Should the Key-in switch require service, the ignition switch assembly must be replaced.

INSTRUMENT CLUSTER (Continued)

INSTRUMENT CLUSTER - EXPORT

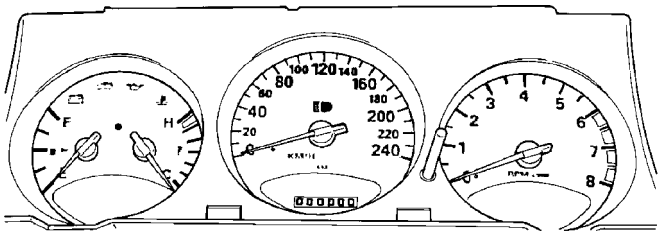

Fig. 1 INSTRUMENT CLUSTER - EXPORT

The instrument cluster (Fig. 1) is referred to as a Electro-Mechanical Instrument Cluster (EMIC). Some of the features it controls are the gauges (except fuel), courtesy lamps, chime control, Daytime Running Lamps (DRL) and cluster self diagnostics. The cluster sends and receives messages via the Programmable Communication Interface (PCI) data bus circuit (J1850). All instrument cluster indicators (Airbag, Seatbelt, etc.) are LED's and are not replaceable, with the exception of the high beam indicator which is a bulb. The gauges are not serviced individually, thereby requiring complete replacement of the cluster if one indicator or gauge becomes defective.

OPERATION

The instrument cluster controls the courtesy lamps. It receives and sends messages to other modules via the PCI (J1850) bus circuit. It controls all the instrument illumination and the chime is also an integral part of the cluster.

All gauges are the analog type. When the ignition switch is moved to the OFF position, the cluster drives each gauge to its lowest position. The individual gauges are not serviceable and require complete replacement of the cluster if one or more gauges are inoperable.

The gauges are the magnetic air-core type. When the ignition switch is OFF, the gauge pointers should rest at or below the lowest graduation. The instrument cluster may be checked quickly by using the cluster self-diagnostics (Refer to 8 - ELECTRICAL/ INSTRUMENT CLUSTER - STANDARD PROCEDURE). After bulb check, (with the key in the RUN position and engine running) all MODULE warning indicators (if so equipped: Airbag, ABS, MIL, Charging System, Trac Off, ETC - Export only) should be extinguished. If any of these indicators stay ON, use the DRB III® scan tool to determine module faults. Also refer to the proper Body Diagnostic Procedures manual for cluster self-diagnostic results.

NOTE: If any of the gauge pointers are stuck on the wrong side of the pointer stop, perform one of the following:

- **Pull the M1 fuse in the fuseblock (refer to Wiring Diagrams for fuse locations) and key on. The gauge pointer will "sweep" the gauges and return all pointers to the correct side of the stop. Key OFF, reinsert the M1 fuse. The cluster will "sweep" the gauges one additional time. The cluster will "sweep" the gauges anytime there was a change in the state of the M1 fuse.**
- **Perform the instrument self-diagnostic check (Refer to 8 - ELECTRICAL/INSTRUMENT CLUSTER - STANDARD PROCEDURE). This will "sweep" all the pointers to the correct side of the pointer stop.**

One button is used to switch the display from trip to total mileage. Holding the button when the display is in the trip mode will reset the trip mileage. This button is also used to put the cluster in self-diagnostic mode (Refer to 8 - ELECTRICAL/INSTRUMENT CLUSTER - STANDARD PROCEDURE). Some of the indicators will come on briefly for a bulb check when the ignition is turned from OFF to ON. The LED's are non serviceable and if one or more warning indictor LED's are out, the entire cluster must be replaced.

In the event that the instrument cluster looses communication with all other modules on the PCI bus, the cluster will display "nobuS" in the VF display. The VF display also displays "Door", "Cruise", "Trac", and odometer trip or total.

If the cluster does not detect voltage on the M1 circuit, the message "FUSE" will alternate with the odometer/trip odometer. The lack of voltage can be due to the M1 Fused B(+) (IOD) fuse being open, or a circuit problem.

Indicator lamps use ON/OFF switch functions for operation, while gauges use a sending unit or sensor.

The instrument cluster will learn some features of the vehicle that it is installed in so swapping clusters from vehicle to vehicle is not recommended.

The features that are learned are:

- ABS
- Traction Control
- SKIM
- RKE
- Air Bags
- Cruise Control
- Lowest/Highest Fuel Level

INSTRUMENT CLUSTER - EXPORT

When the ignition key is ON, the instrument cluster indicator lamps will come on for a brief bulb check. The seat belt indicator lamp will remain ON until the (Driver) seat belt is fastened. The chime will sound for 6 seconds if the seat belt is unbuckled when the ignition is first turned ON. The export

INSTRUMENT CLUSTER (Continued)

instrument cluster operates in the same manner as non-export clusters. Refer to the appropriate Body Diagnostic Procedures manual for complete diagnosis and testing of the instrument cluster.

DIAGNOSIS AND TESTING

DIAGNOSIS AND TESTING - INSTRUMENT CLUSTER WARNING/INDICATOR LAMPS

Every time the vehicle is switched to the START/RUN position, the cluster goes through a BULB CHECK. This tests most of the indicator lamps and Vacuum Fluorescent (VF) displays. If any of the lamps fail to light during the bulb check, refer to the proper Body Diagnostic Procedures manual. The lamps are not replaceable except for the high beam indicator and gauge illumination bulbs. None of these though will illuminate, along with the security indicator, during the bulb check at initial KEY ON.

To diagnose the cluster lamps first place the cluster in self-diagnostic mode. With the ignition switch in the OFF position, press the trip odometer reset button down. Simultaneously turn the ignition key to the ON position and release the trip reset button. Depending on optional equipment, the indicator lamps and VF displays should illuminate except for the fog lampm liftgate ajar, and any unlearned features.

DIAGNOSIS AND TESTING - MULTIPLE/INDIVIDUAL GAUGES INOPERATIVE

Test speedometer, tachometer and other gauges for malfunction using the following:

(1) First perform Cluster Self-Diagnostics (Refer to 8 - ELECTRICAL/INSTRUMENT CLUSTER - STANDARD PROCEDURE). If there is a response, watch for the effected gauge(s) for operation. Replace cluster as necessary. If there is no response to the cluster self-diagnostics, go to Step 2.

(2) Remove the cluster (Refer to 8 - ELECTRICAL/INSTRUMENT CLUSTER - REMOVAL).

(3) Check for ignition voltage at Pin 14 of the 26-way cluster wire harness connector. Refer to Wiring Diagrams for connector views. Check for battery voltage at Pin 4 of the 26-way connector. If no voltage, repair as necessary.

(4) Check Pin 1 and Pin 2 of the 26-way connector for continuity to ground. If no ground, repair as necessary.

(5) If the voltage and ground are OK, and the pins or the connectors are not distorted, replace the instrument cluster(Refer to 8 - ELECTRICAL/INSTRUMENT CLUSTER - REMOVAL).

(6) **Autostick clusters only** - In KEY UNLOCK/RUN/START there is B+ battery voltage at Pin 15 of the 26-way connector. Refer to Step 3.

26-WAY CLUSTER HARNESS CONNECTOR PIN CALL-OUT

CAV.	FUNCTION
1	POWER GROUND
2	LOGIC GROUND
3	PARK LAMP ILLUMINATION FEED
4	BATTERY FEED - M1
5	
6	
7	DOME/MAP/CARGO LAMP
8	
9	DRIVER DOOR AJAR
10	LEFT TURN OUTPUT (DRL)
11	LEFT TURN SIGNAL INPUT
12	RIGHT TURN OUTPUT (DRL)
13	RIGHT TURN SIGNAL INPUT
14	IGNITION RUN/START
15	UNLOCK/RUN/START (AUTOSTICK ONLY
16	SPARE OUTPUT B
17	
18	HIGH BEAM
19	KEY-IN IGNITION
20	SEAT BELT
21	PARK BRAKE
22	PANEL ILLUMINATION DRIVER
23	PASSENGER DOOR AJAR
24	LIFTGATE AJAR
25	PROGRAM VPM
26	PCI BUS

10-WAY CLUSTER HARNESS CONNECTOR PIN CALL-OUT

CAV.	FUNCTION
1	FRONT FOG
2	VEHICLE THEFT/SECURITY SYSTEM (VTSS)
3	SPARE INPUT 5
4	SPARE INPUT 4
5	SPARE INPUT 3
6	REAR FOG
7	PANEL DIMMING LEVEL
8	REVERSE INPUT
9	FUEL SENSOR
10	SPARE INPUT 2

INSTRUMENT CLUSTER (Continued)

STANDARD PROCEDURE - SELF-DIAGNOSTICS

To put the instrument cluster in Self-Diagnostic Mode, press the trip reset button down and then turn the ignition to the ON position simultaneously, then release the button. The gauges will increment to selected stops and all indicators will light with the exception of liftgate ajar and fog lamp indicators. The oil lamp will come on when the ignition is turned ON and the engine is OFF. Refer to the proper Body Diagnostic Procedures manual if one or more indicators don't light, or a gauge does not appear to be functioning correctly.

NOTE: If a vehicle/instrument cluster is received with the instrument cluster gauge pointers on the wrong side of the pointer stops, momentarily remove the M1 fuse, located in the Power Distribution Center (PDC) in the engine compartment, then replace. The gauge pointers should then step through the scales and then sweep back to the proper side of the pointer stops.

REMOVAL

CAUTION: DO NOT turn cluster upside down for longer than 30 minutes (preferably NEVER). This can result in dampening fluid within the gauge pointer assembly to leak causing permanent damage to the instrument cluster gauges.
DO NOT expose the instrument cluster to direct sunlight for extended periods of time. Any overexposure to direct sunlight permanently warps the internal mask of the instrument cluster, causing the pointers to stick. It is acceptable to store the instrument cluster on the floor of the vehicle, gauges facing up, out of direct sunlight.
DO NOT do an electrical "HOT SWAP" when replacing or testing clusters. Ensure that the ignition is OFF with the M1 fuse removed, or the battery negative cable is disconnected. Partial mating of the cluster connector circuits can damage and/or destroy the cluster microprocessor if power is available.
DO NOT swap clusters between vehicles. The instrument cluster has learned information stored in its microprocessor for Airbags, Anti-Lock Brakes, Traction Control, Cruise, and Smart Key Immobilizer. Swapping clusters between cars, may result in the improper illumination of cluster indicators associated with the above features.

(1) Open hood.
(2) Disconnect and isolate the battery negative cable.
(3) Remove the instrument cluster bezel. Refer to Body, Instrument Panel, Instrument Cluster Bezel, Removal.
(4) Remove four screws to the instrument cluster (Fig. 2) and pull straight back to release off of self-docking connectors (Fig. 3).

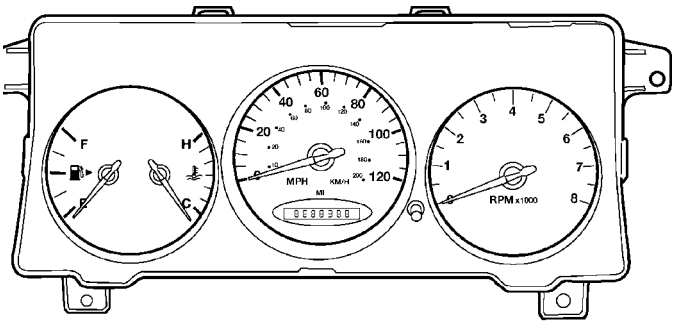

Fig. 2 INSTRUMENT CLUSTER

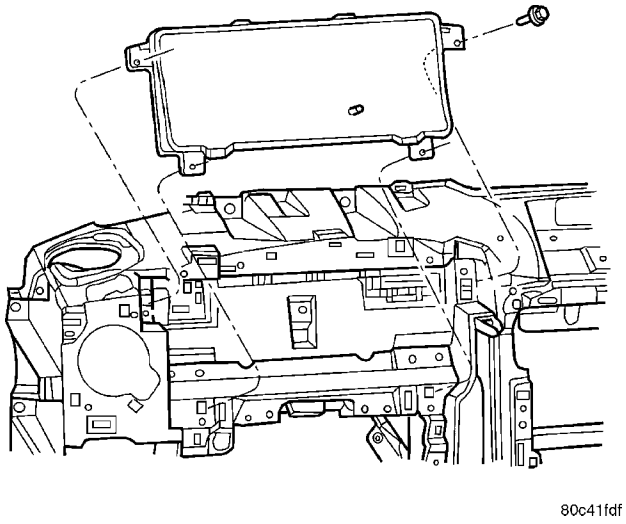

Fig. 3 INSTRUMENT CLUSTER REMOVE/INSTALL

INSTRUMENT CLUSTER (Continued)

INSTALLATION

CAUTION: DO NOT turn cluster upside down for longer than 30 minutes (preferably NEVER). This can result in dampening fluid within the gauge pointer assembly to leak causing permanent damage to the instrument cluster gauges.
DO NOT expose the instrument cluster to direct sunlight for extended periods of time. Any overexposure to direct sunlight permanently warps the internal mask of the instrument cluster, causing the pointers to stick. It is acceptable to store the instrument cluster on the floor of the vehicle, gauges facing up, out of direct sunlight.
DO NOT do an electrical "HOT SWAP" when replacing or testing clusters. Ensure that the ignition is OFF with the M1 fuse removed, or the battery negative cable is disconnected. Partial mating of the cluster connector circuits can damage and/or destroy the cluster microprocessor if power is available.
DO NOT swap clusters between vehicles. The instrument cluster has learned information stored in its microprocessor for Airbags, Anti-Lock Brakes, Traction Control, Cruise, and Smart Key Immobilizer. Swapping clusters between cars, may result in the improper illumination of cluster indicators associated with the above features.

(1) Align the cluster over the self-docking connectors and push firmly into place until seated.
(2) Install four screws to the instrument cluster (Fig. 2)and pull straight back to release off of self-docking connectors (Fig. 3).
(3) Install the instrument cluster bezel. Refer to Body, Instrument Panel, Instrument Cluster Bezel, Installation.
(4) Connect the battery negative cable.
(5) Close hood.
(6) Verify vehicle and system operation.

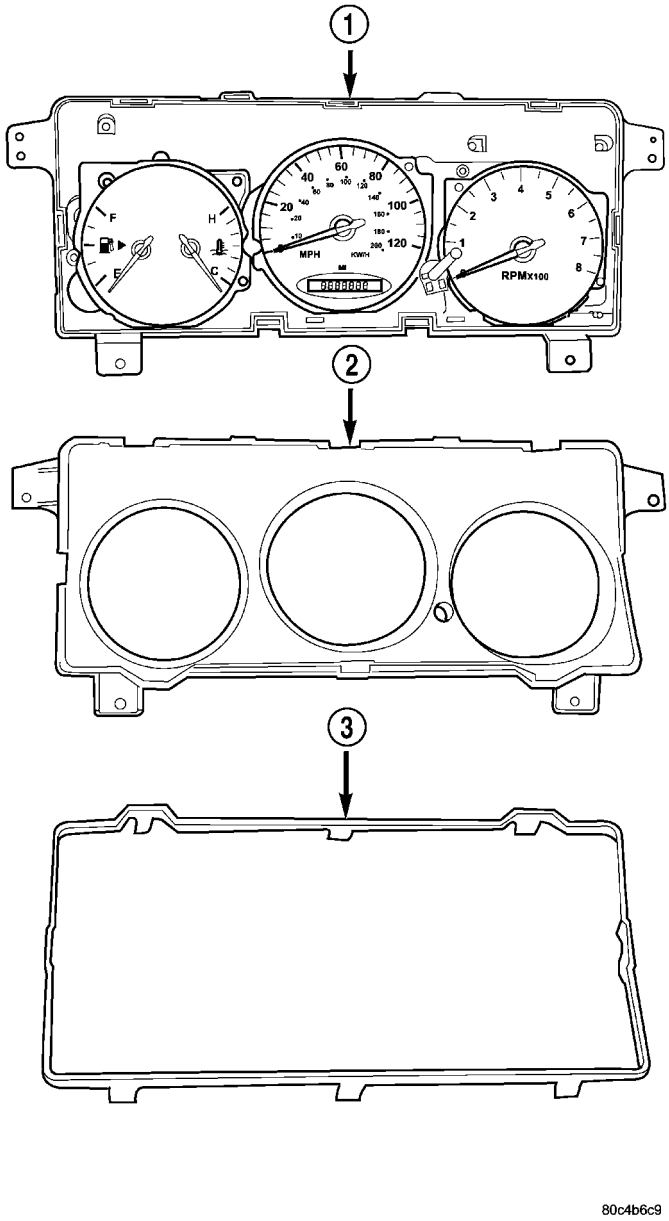

Fig. 4 INSTRUMENT CLUSTER BREAKDOWN

1 - CLUSTER
2 - MASK
3 - LENS

CLUSTER MASK/LENS

REMOVAL

(1) Remove instrument cluster (Refer to 8 - ELECTRICAL/INSTRUMENT CLUSTER - REMOVAL).
(2) To separate the mask/lens from the cluster housing, depress the locking tabs, starting at one point and working all the way around the cluster, and then pull up on the mask/lens (Fig. 4).

INSTALLATION

(1) To install new mask/lens, just place in position and snap together.
(2) Install instrument cluster (Refer to 8 - ELECTRICAL/INSTRUMENT CLUSTER - INSTALLATION).

LAMPS

TABLE OF CONTENTS

page

LAMPS/LIGHTING - EXTERIOR 1

LAMPS/LIGHTING - INTERIOR 28

LAMPS/LIGHTING - EXTERIOR

TABLE OF CONTENTS

page

LAMPS/LIGHTING - EXTERIOR
SPECIFICATIONS
EXTERIOR LAMPS 2
BACK-UP LAMP
REMOVAL 2
INSTALLATION 2
BACK-UP LAMP UNIT
REMOVAL 3
INSTALLATION 3
BRAKE LAMP SWITCH
DESCRIPTION 3
OPERATION 4
DIAGNOSIS AND TESTING - BRAKE LAMP SWITCH 4
REMOVAL 4
INSTALLATION 5
CENTER HIGH MOUNTED STOP LAMP
REMOVAL 5
INSTALLATION 5
CENTER HIGH MOUNTED STOP LAMP UNIT
REMOVAL 5
INSTALLATION 6
COMBINATION FLASHER
DESCRIPTION 6
OPERATION 6
REMOVAL 6
INSTALLATION 6
DAYTIME RUNNING LAMP MODULE
DESCRIPTION 7
OPERATION 7
FOG LAMP
DIAGNOSIS AND TESTING - FOG LAMP 7
REMOVAL 8
INSTALLATION 8
FOG LAMP UNIT
STANDARD PROCEDURE - FOG LAMP UNIT ALIGNMENT 8
REMOVAL 8
INSTALLATION 8
FRONT POSITION LAMP - EXPORT
DESCRIPTION 9
OPERATION 9
DIAGNOSIS AND TESTING - FRONT POSITION LAMP - EXPORT 9
REMOVAL 10
INSTALLATION 10
HEADLAMP
DIAGNOSIS AND TESTING - HEADLAMPS 10
REMOVAL 11
INSTALLATION 11
HEADLAMP UNIT
STANDARD PROCEDURE
STANDARD PROCEDURE - HEADLAMP UNIT ALIGNMENT 12
STANDARD PROCEDURE - HEADLAMP UNIT ALIGNMENT - EXPORT 13
REMOVAL 13
INSTALLATION 15
HEADLAMP LEVELING MOTOR - EXPORT
DESCRIPTION 15
OPERATION 16
DIAGNOSIS AND TESTING - HEADLAMP LEVELING MOTOR - EXPORT 16
REMOVAL 16
INSTALLATION 17
HEADLAMP LEVELING SWITCH - EXPORT
DESCRIPTION 17
OPERATION 17
DIAGNOSIS AND TESTING - HEADLAMP LEVELING SWITCH - EXPORT 17
REMOVAL 17
INSTALLATION 18
HEADLAMP SWITCH
DESCRIPTION 18

OPERATION 18
LICENSE PLATE LAMP
REMOVAL 18
INSTALLATION 18
LICENSE PLATE LAMP UNIT
REMOVAL 19
INSTALLATION 19
MULTI-FUNCTION SWITCH
DESCRIPTION 19
OPERATION 20
DIAGNOSIS AND TESTING - MULTI-FUNCTION SWITCH 20
REMOVAL 24
INSTALLATION 24
PARK/TURN SIGNAL LAMP
REMOVAL 25
INSTALLATION 25
REAR FOG LAMP SWITCH - EXPORT
DESCRIPTION 25
OPERATION 25
SIDE REPEATER LAMP - EXPORT
DIAGNOSIS AND TESTING - SIDE REPEATER LAMP 26
REMOVAL 26
INSTALLATION 26
SIDE REPEATER LAMP UNIT - EXPORT
REMOVAL 26
INSTALLATION 26
TAIL LAMP
REMOVAL 26
INSTALLATION 26
TAIL LAMP UNIT
REMOVAL 27
INSTALLATION 27

LAMPS/LIGHTING - EXTERIOR

SPECIFICATIONS

EXTERIOR LAMPS

CAUTION: Do not use bulbs that have a higher candle power than the bulb listed in the chart below. Damage to lamp can result. Do not touch halogen bulbs with fingers or other oily surfaces. Bulb life will be reduced.

BULB APPLICATION TABLE

LAMP	BULB
BACK-UP LAMP	3157-P27/7W
CHMSL	W16W
FRONT FOG LAMP	9006
FRONT PARK/TURN SIGNAL LAMP/SIDE MARKER	4157NAKX
HEADLAMP LOW BEAM	9006XS
HEADLAMP HIGH BEAM	9005XS
LICENSE PLATE LAMP	168
TAIL LAMP	3157-P27/7W

BULB APPLICATION TABLE - EXPORT

LAMP	BULB
FRONT POSITION LAMP	W5W
SIDE REPEATER LAMP	W5W

BACK-UP LAMP

REMOVAL

(1) Remove screws attaching the back-up lamp assembly to the fascia (Fig. 1).
(2) Remove lamp assembly.
(3) Remove socket from housing.
(4) Pull bulb from socket

INSTALLATION

(1) Push bulb into socket (Fig. 1).
(2) Install socket into the housing. Rotate the socket clockwise until fully seated.
(3) Test lamp operation
(4) Install screws attaching back-up lamp unit to fascia.

BACK-UP LAMP (Continued)

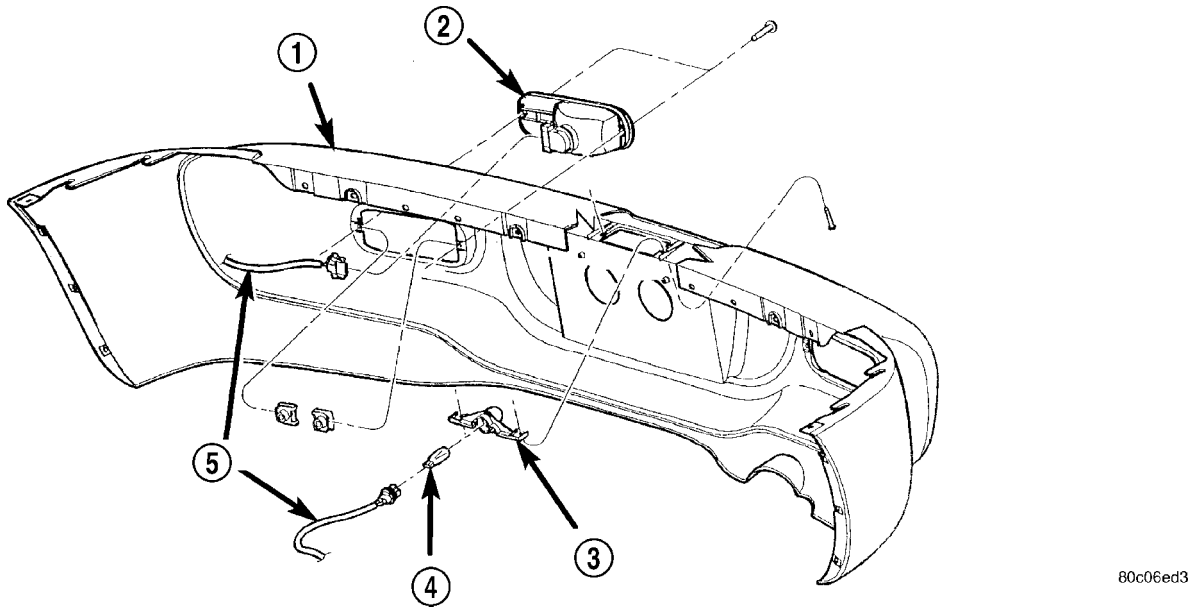

Fig. 1 BACK-UP LAMP

1 - REAR FASCIA
2 - BACK-UP LAMP ASSEMBLY
3 - LICENSE PLATE LAMP
4 - BULB
5 - CONNECTOR

BACK-UP LAMP UNIT

REMOVAL

(1) Remove screws attaching the back-up lamp assembly to the fascia (Fig. 1).

(2) Remove back up lamp assembly.

(3) Remove the bulb socket from the lamp housing by rotating the socket counter-clockwise until the socket is free of the housing.

INSTALLATION

(1) Install the bulb socket into the lamp housing by rotating the socket clockwise until fully seated.

(2) Place back-up lamp assembly into position.

(3) Test lamp operation

(4) Install screws attaching back-up lamp unit to fascia.

BRAKE LAMP SWITCH

DESCRIPTION

The brake lamp switch is located under the instrument panel, at the brake pedal arm (Fig. 2). It has three internal switches controlling various functions of the vehicle. It's main function is to control operation of the vehicle's brake lamps. Other functions include speed control deactivation, brake sense for the antilock brake system and brake sense for the brake transmission shift interlock.

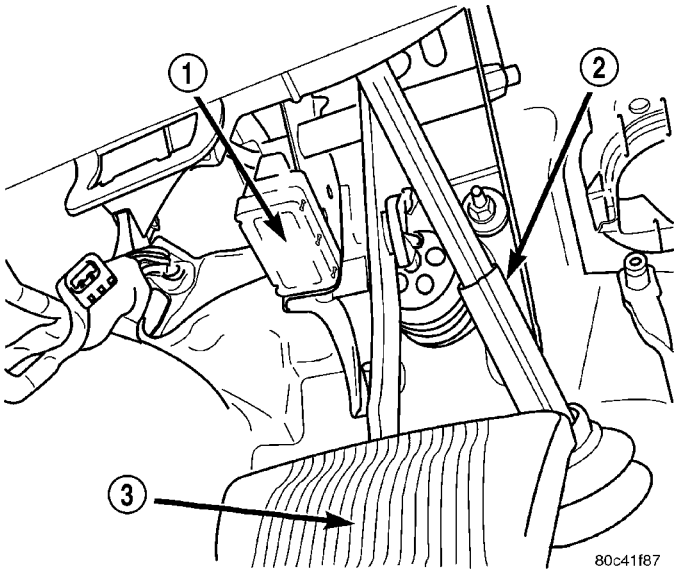

Fig. 2 BRAKE LAMP SWITCH

1 - BRAKE LAMP SWITCH
2 - STEERING COLUMN COUPLER
3 - BRAKE PEDAL

CAUTION: The switch can only be adjusted once. That is during initial installation of the switch. If the switch is not adjusted properly or has been removed for some service, a new switch must be installed and adjusted.

BRAKE LAMP SWITCH (Continued)

OPERATION

When the brake pedal is pressed, the plunger on the outside of the brake lamp switch extends outward. This action opens or closes the contacts of the three switches inside the brake lamp switch.

With the brake pedal pressed down (plunger extended), the switch for terminals 1 and 2 is closed completing the circuit. The switch for terminals 3 and 4 is open and so is the switch for 5 and 6.

When the brake pedal is released (plunger pushed in), the three switches assume the opposite positions. The switch for terminals 1 and 2 is now open while the other two switches are now closed, completing their circuits.

DIAGNOSIS AND TESTING - BRAKE LAMP SWITCH

NOTE: Before proceeding with this diagnostic test, verify the adjustment lever on the back of the switch is in the adjusted position. If the lever is in the non-adjusted (diagonal) position it may have never been adjusted. For adjustment, (Refer to 8 - ELECTRICAL/LAMPS/LIGHTING - EXTERIOR/BRAKE LAMP SWITCH - INSTALLATION).

If the electrical circuit has been tested and the brake lamp switch is suspected of being faulty, it can be tested using the following method.

(1) Remove the switch from the vehicle (Refer to 8 - ELECTRICAL/LAMPS/LIGHTING - EXTERIOR/BRAKE LAMP SWITCH - REMOVAL).

(2) With the switch in the released position (plunger extended), use an ohmmeter to test each of the three internal switches as shown (Fig. 3). You should achieve the results as listed in the figure.

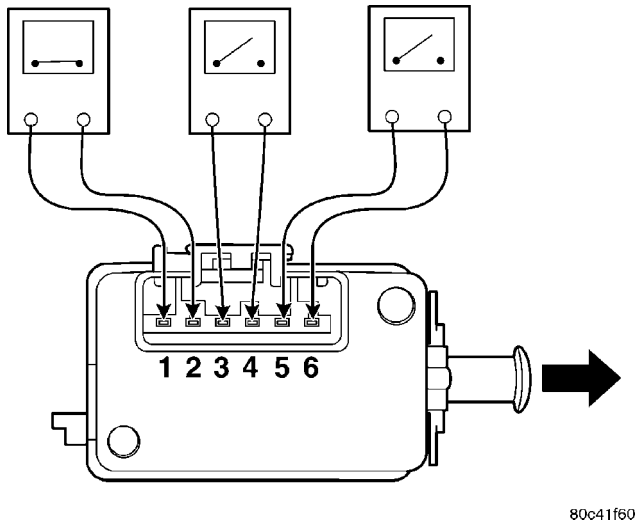

Fig. 3 SWITCH TEST - RELEASED POSITION

(3) Gently push the plunger on the brake lamp switch in until it stops.

(4) With the switch in this depressed position (plunger pushed in), use an ohmmeter to test each of the three internal switches as shown (Fig. 4). You should achieve the results as listed in the figure.

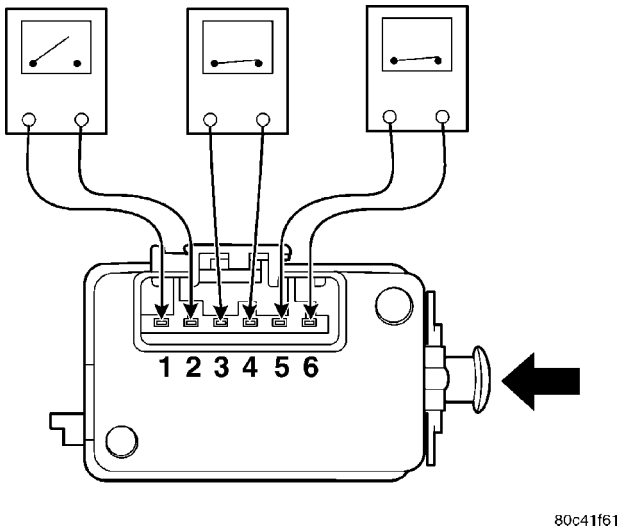

Fig. 4 SWITCH TEST - DEPRESSED POSITION

If you do not achieve the results as listed in both figures, the switch is faulty and must be replaced. Refer to Removal And Installation in this section.

If the switch is found to be operating properly, it may be misadjusted. Do not reinstall the switch, replace it (Refer to 8 - ELECTRICAL/LAMPS/LIGHTING - EXTERIOR/BRAKE LAMP SWITCH - INSTALLATION).

CAUTION: The switch can only be adjusted once. That is during initial installation of the switch. If the switch is not adjusted properly or has been removed for any reason, a new switch must be installed and adjusted.

REMOVAL

(1) Unclip the air cleaner cover (two clips) and move the cover aside.

(2) Disconnect and isolate the battery negative cable from its post on the battery.

(3) Remove the silencer pad below the knee blocker.

(4) Fold down and remove the knee blocker below the steering column.

(5) Remove the brake lamp switch from its bracket by rotating the switch in a counterclockwise direction approximately 30 degrees, then pulling the switch rearward.

(6) Disconnect the wiring harness connector.

(7) Discard the brake lamp switch. **It must not be reused.**

BRAKE LAMP SWITCH (Continued)

INSTALLATION

CAUTION: Do not reuse the original brake lamp switch. The switch can only be adjusted once. That is during initial installation of the switch. If the switch is not adjusted properly or has been removed for some service, a new switch must be installed and adjusted.

(1) Obtain NEW brake lamp switch. The adjustment lever on the new switch should be at a 45° angle from the wiring connector. **If the adjustment lever is parallel with the wiring connector, the switch has been pre-set and must be scrapped. DO NOT ATTEMPT TO RESET (OR RE-ADJUST) THE BRAKE LAMP SWITCH.**

(2) Connect the wiring harness to the connector on the switch.

(3) Mount and adjust the NEW brake lamp switch using the following steps:

(a) Install the switch in its bracket by aligning the index tab on the switch with the notch in the mounting bracket.

(b) When the switch body is fully seated in its bracket, rotate the switch clockwise approximately 30° to lock the switch into place.

(c) With the brake pedal in the fully released position, move the adjustment lever on the brake lamp switch from the 45° angled non-adjusted position, clockwise as shown, until it is parallel with the wiring connector (Fig. 5). The brake lamp switch is now properly adjusted to the vehicle.

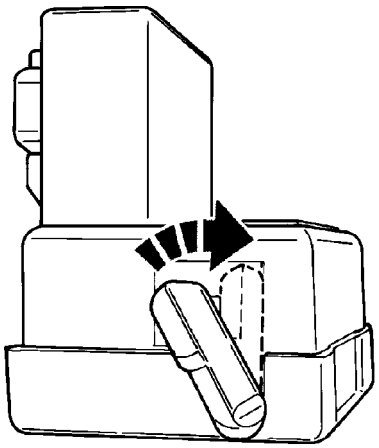

Fig. 5 Adjustment Lever Movement

(4) Install the knee blocker.

(5) Install the silencer pad below the knee blocker.

(6) Reconnect the battery negative terminal.

(7) Reinstall the air cleaner cover (two clips).

(8) Check the stop lamps to verify they are operating properly and not staying on when the pedal is in the released position.

(9) Road test the vehicle to ensure proper operation of the brakes (including ABS) and speed control (if equipped).

CENTER HIGH MOUNTED STOP LAMP

REMOVAL

(1) Open liftgate.

(2) Remove liftgate CHMSL cover (Fig. 6).

(3) Unsnap and remove the CHMSL lens from the lamp housing.

(4) Pull bulb(s) from the lamp housing.

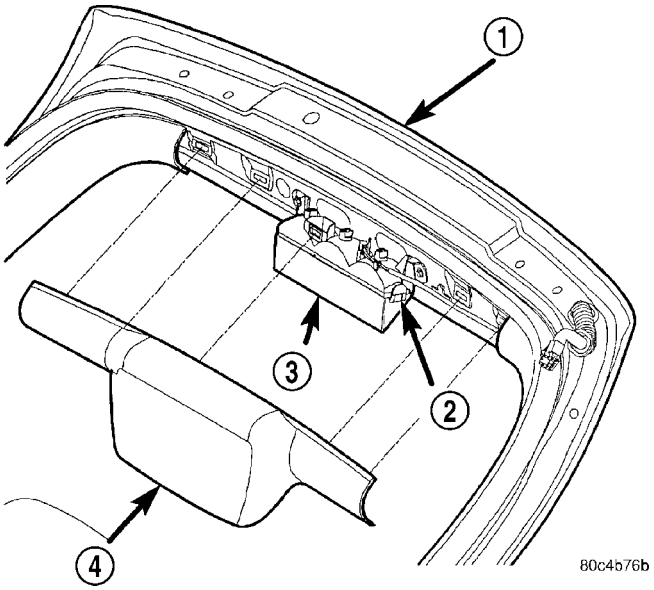

Fig. 6 CENTER HIGH MOUNTED STOP LAMP AND COVER

1 - LIFTGATE
2 - SNAP
3 - CHMSL LAMP
4 - CHMSL COVER

INSTALLATION

(1) Install bulb(s) into the lamp housing (Fig. 6).

(2) Snap the CHMSL lens onto the lamp housing.

(3) Test operation of lamps.

(4) Install liftgate CHMSL cover.

(5) Close liftgate.

CENTER HIGH MOUNTED STOP LAMP UNIT

REMOVAL

(1) Open liftgate.

(2) Remove liftgate CHMSL cover (Fig. 6).

(3) Disconnect the wire harness from the CHMSL.

CENTER HIGH MOUNTED STOP LAMP UNIT (Continued)

(4) Remove screws attaching the CHMSL unit (Fig. 7).

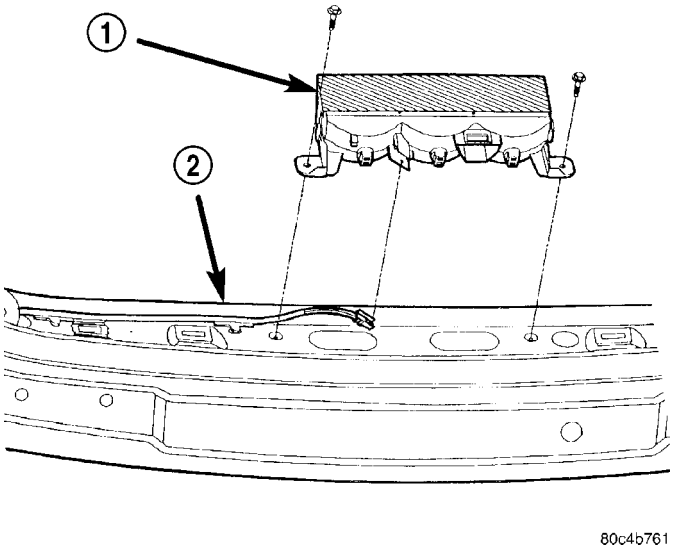

Fig. 7 CENTER HIGH MOUNTED STOP LAMP UNIT

1 - CHMSL LAMP
2 - LIFTGATE

(5) Remove the CHMSL unit from vehicle.

INSTALLATION

(1) Engage the wire harness connector to the CHMSL.

(2) Instal screws attaching the CHMSL unit (Fig. 7).

(3) Test operation of lamps.

(4) Install liftgate CHMSL cover.

(5) Close liftgate.

COMBINATION FLASHER

DESCRIPTION

The turn signal flasher and the hazard warning flasher are combined into one unit called a Combination Flasher (combo-flasher). The combo-flasher is a smart relay located on the back of the multi-function switch (Fig. 8). The combo-flasher is black in color and has a dampener material wrapped on it.

OPERATION

The combo-flasher controls the flashing of the hazard warning system and the turn signal system. Constant battery voltage is supplied to the flasher so that it can perform the hazard warning function, and ignition switched battery voltage is supplied for the turn signal function. However, when the flasher is idle no current is drawn through the module. The unit does not become active until it is provided a signal ground from the turn signal switch or hazard warning switch. An inoperative bulb or incomplete turn signal circuit will cause the flasher rate to double. Typical flash rate is about ninety flashes per minute. When a bulb is burnt out, or when a circuit for a lamp is open, the turn signal flash rate will increase to a minimum of 180 flashes per minute. However, an open lamp circuit or burnt out bulb does not change the hazard warning flash rate.

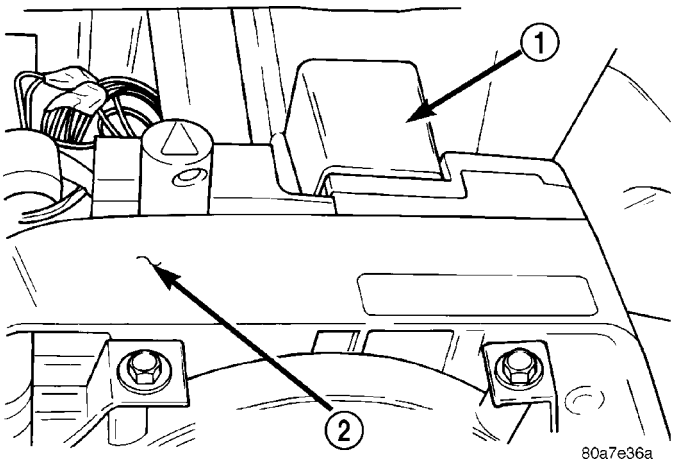

Fig. 8 COMBINATION FLASHER

1 - COMBINATION FLASHER
2 - MULTI-FUNCTION SWITCH

Turn signal inputs that actuate the combination flasher are low current grounds, each drawing a maximum of 300 milliamperes. The turn signal inputs are provided to the flasher through the multi-function switch on the steering column. The hazard warning signal input is a low current ground drawing a maximum of 600 milliamperes. The hazard warning input can be provided through the multi-function switch on the steering column.

REMOVAL

The flasher is mounted to the back side of the multi-function switch (Fig. 8). The flasher is serviced separately from the multi-function switch.

(1) Open hood.

(2) Disconnect and isolate the battery negative cable.

(3) Remove the upper steering column shroud.

(4) The flasher can be removed by pulling it toward the instrument cluster (forward) (Fig. 8).

INSTALLATION

The flasher is mounted to the back side of the multi-function switch (Fig. 8). The flasher is serviced separately from the multi-function switch.

(1) Align the combo-flasher tabs and push into place (Fig. 8).

(2) Install the upper steering column shroud.

(3) Connect the battery negative cable.

COMBINATION FLASHER (Continued)

(4) Close hood.
(5) Verify vehicle and system operation.

DAYTIME RUNNING LAMP MODULE

DESCRIPTION

Vehicles built for use in Canada are equipped with a Daytime Running Lamp (DRL) system. Turn signal lamp circuitry always comes from the multi-function switch, and goes to the cluster connector, into the cluster, then back out to the front turn signal switch lamps.

OPERATION

The Canadian cluster provides steady illumination of the front turn signal when the ignition switch is in the ON position. The DRL function may be inhibited by activating the turn signals, the hazard flashers, the headlamp switch, or park brake.

FOG LAMP

DIAGNOSIS AND TESTING - FOG LAMP

FOG LAMP DIAGNOSIS

CONDITION	POSSIBLE CAUSES	CORRECTION
FOG LAMPS ARE DIM WITH ENGINE IDLING OR IGNITION TURNED OFF.	1. Loose or corroded battery cables.	1. Clean and secure battery cable clamps and posts.
	2. Loose or worn generator drive belt.	2. Adjust or replace generator drive belt.
	3. Charging system output too low.	3. Test and repair charging system. Refer to Charging System.
	4. Battery has insufficient charge.	4. Test battery state - of - charge. Refer to Battery.
	5. Battery is sulfated or shorted.	5. Load test battery. Refer to Battery.
	6. Poor lighting circuit Z1-ground.	6. Test for voltage drop across Z1-ground locations. Refer to Wiring Diagnosis.
FOG LAMP BULBS BURN OUT FREQUENTLY.	1. Charging system output too high.	1. Test and repair charging system. Refer to Charging System.
	2. Loose or corroded terminals or splices in circuit.	2. Inspect and repair all connectors and splices. Refer to Wiring Diagnosis.
FOG LAMPS ARE DIM WITH ENGINE RUNNING ABOVE IDLE.	1. Charging system output too low.	1. Test and repair charging system. Refer to Charging System.
	2. Poor lighting circuit Z1-ground.	2. Test for voltage drop across Z1-ground locations. Refer to Wiring Diagnosis.
	3. High resistance in fog lamp circuit.	3. Test amperage draw of fog lamp circuit.
FOG LAMPS FLASH RANDOMLY.	1. Poor lighting circuit Z1-ground.	1. Test for voltage drop across Wiring Diagnosis.
	2. High resistance in fog lamp circuit.	2. Test amperage draw of fog lamp circuit.
	3. Faulty fog lamp switch.	3. Replace fog lamp switch.
	4. Loose or corroded terminals or splices in circuit.	4. Inspect and repair all connectors and splices. Refer to Wiring Diagnosis.

FOG LAMP (Continued)

CONDITION	POSSIBLE CAUSES	CORRECTION
FOG LAMPS DO NOT ILLUMINATE	1. Blown fuse for fog lamp.	1. Replace fuse. Refer to Wiring Diagnosis.
	2. No Z1-ground at fog lamps.	2. Repair circuit ground. Refer to Wiring Diagnosis.
	3. Faulty fog lamp switch.	3. Replace fog lamp switch.
	4. Broken connector terminal or wire splice in fog lamp circuit.	4. Repair connector terminal or wire splice.
	5. Defective or burned out bulb.	5. Replace bulb.

REMOVAL

(1) Reach behind the lower splash shield to gain access to the rear of the fog lamp (Fig. 9).
(2) Disconnect wire connector from fog lamp.
(3) Remove bulb from lamp.

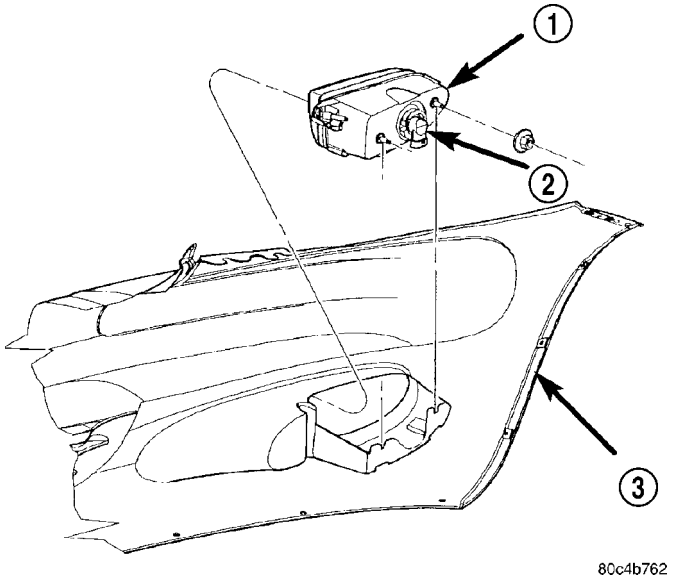

Fig. 9 FOG LAMP

1 - FOG LAMP ADAPTER
2 - FOG LAMP BULB
3 - FRONT FASCIA

INSTALLATION

CAUTION: Do not touch the glass of halogen bulbs with fingers or other possibly oily surface, reduced bulb life will result.

(1) Install bulb into lamp (Fig. 9).
(2) Connect wire connector to the fog lamp.
Test operation of lamp.
(3) Install splash shield attaching fasteners.

FOG LAMP UNIT

STANDARD PROCEDURE - FOG LAMP UNIT ALIGNMENT

Prepare an alignment screen (Refer to 8 - ELECTRICAL/LAMPS/LIGHTING - EXTERIOR/HEADLAMP UNIT - STANDARD PROCEDURE) and read the Alignment Screen Preparation paragraph. Turn on the headlamp switch to the parking lamps only position and actuate the fog lamp switch. A properly aligned fog lamp will project a pattern on the alignment screen with the top of the cut-off line 10 cm (4 in.) below the fog lamp center line and straight ahead with the vehicle 25 feet from the alignment screen.

To adjust fog lamp unit alignment, rotate the alignment screw located on the side of the fog lamp unit from the cooling opening in the fascia, just inboard of the fog lamp opening, to achieve the specified pattern position (Fig. 10).

REMOVAL

(1) Remove fasteners attaching lower splash shield to gain access to the rear of the fog lamp (Fig. 9).
(2) Disconnect wire connector from fog lamp.
(3) Remove nuts attaching fog lamp to fascia.
(4) Remove lamp from fascia. The lower horn may need to be removed for easier fog lamp unit removal.
(5) Remove the two fasteners attaching the outboard end of the fascia to the fender.
(6) Rotate fog lamp unit forward, up, and out.

INSTALLATION

CAUTION: Do not touch the glass of halogen bulbs with fingers or other possibly oily surface, reduced bulb life will result.

(1) Rotate fog lamp unit into position.
(2) Place fog lamp unit into position.
(3) Ensure that the three locating tabs molded into the fog lamp adapter are seated in the three matching fascia slots.
(4) Install nuts attaching fog lamp to fascia.

FOG LAMP UNIT (Continued)

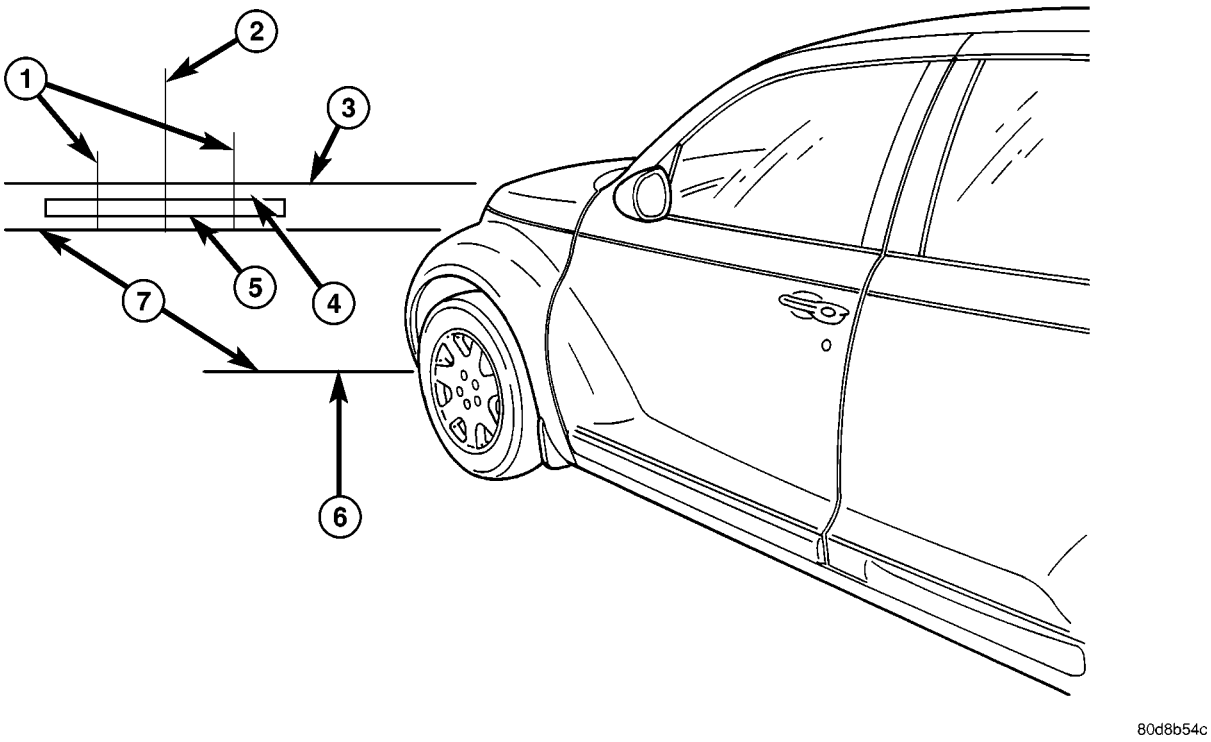

Fig. 10 FOG LAMP UNIT ALIGNMENT SCREEN

1 - CENTER LINE OF FOG LAMPS
2 - CENTER LINE OF VEHICLE
3 - FLOOR TO CENTER OF FOG LAMP
4 - 10cm (4 IN.)
5 - FOG LAMP HOT SPOT
6 - FRONT OF FOG LAMP
7 - 7.62 METERS (25 FT.)

(5) Connect wire connector to the fog lamp.
(6) Install horn if removed.
(7) Install two fasteners to hold the outboard end of the fascia to the fender.

FRONT POSITION LAMP - EXPORT

DESCRIPTION

On vehicles equipped with front position lamps, it is incorporated into each of the headlamp units (Fig. 11). Front position lamps utilize a clear lens and clear bulb. (Refer to 8 - ELECTRICAL/LAMPS/ LIGHTING - EXTERIOR - SPECIFICATIONS).

OPERATION

The front position lamps are turned ON or OFF with the headlamp switch which is incorporated in the multi-function switch.

DIAGNOSIS AND TESTING - FRONT POSITION LAMP - EXPORT

NOTE: Battery must be completely charged (12v) prior to testing. It may also be necessary to install battery charger on the vehicles electrical system when performing this test.

(1) Remove the front position lamp bulb and check for burned out condition. Replace bulb if necessary.
(2) If bulb appears OK, reinstall the bulb in its socket and rotate the left side multi-function switch one detent position and check for lamp operation. If lamp is still inoperative proceed to Step 3.
(3) Remove lamp bulb and check for power (12v) and ground connections in lamp socket. If power and/or ground connections are not present, trace wire until open or short is found. Refer to Wiring Diagrams for a complete system schematic.

FRONT POSITION LAMP - EXPORT (Continued)

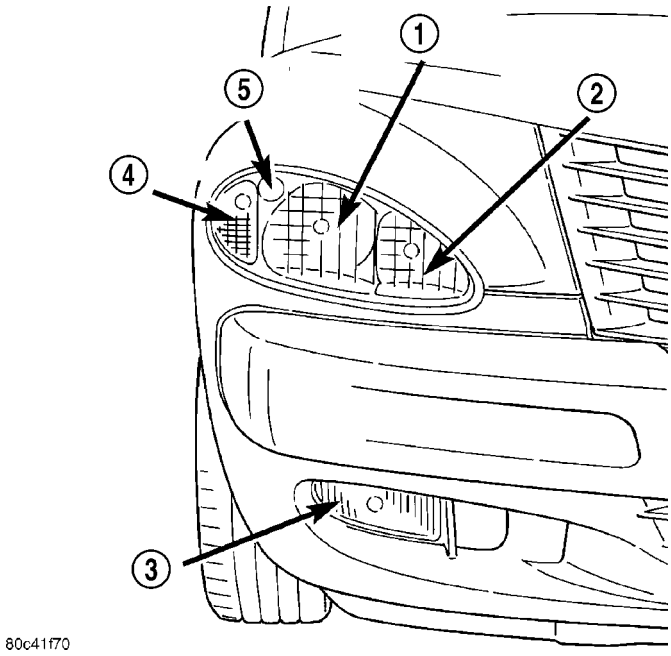

Fig. 11 FRONT POSITION LAMP LOCATION - EXPORT

1 - LOW BEAM HEADLAMP
2 - HIGH BEAM HEADLAMP
3 - FOG LAMP
4 - TURN SIGNAL LAMP
5 - FRONT POSITION LAMP - EXPORT

REMOVAL

(1) Working in the appropriate wheel well, open the lamp bulb access door located in the front portion of the front wheel well splash shield.

(2) Grasp the front position lamp socket extension and pull straight out of headlamp unit.

(3) Rotate bulb counter-clockwise and pull straight from its socket.

INSTALLATION

(1) Install the bulb in its socket.

(2) Install front position lamp in headlamp unit.

(3) Close the appropriate lamp bulb access door in splash shield.

(4) Verify lamp operation.

HEADLAMP

DIAGNOSIS AND TESTING - HEADLAMPS

Always begin any diagnosis by testing all of the fuses and circuit breakers in the system. Refer to Wiring Diagrams.

HEADLAMP DIAGNOSIS

CONDITION	POSSIBLE CAUSES	CORRECTION
HEADLAMPS ARE DIM WITH ENGINE IDLING OR IGNITION TURNED OFF.	1. Loose or corroded battery cables.	1. Clean and secure battery cable clamps and posts.
	2. Loose or worn generator drive belt.	2. Adjust or replace generator drive belt.
	3. Charging system output too low.	3. Test and repair charging system. Refer to Charging System.
	4. Battery has insufficient charge.	4. Test battery state - of - charge. Refer to Battery.
	5. Battery is sulfated or shorted.	5. Load test battery. Refer to Battery.
	6. Poor lighting circuit Z1 - ground.	6. Test for voltage drop across Z1 - ground locations. Refer to Wiring Diagrams.
	7. Both headlamp bulbs defective.	7. Replace both headlamp bulbs.
HEADLAMP BULBS BURN OUT FREQUENTLY.	1. Charging system output too high.	1. Test and repair charging system. Refer to Charging System.
	2. Loose or corroded terminals or splices in circuit.	2. Inspect and repair all connectors and splices. Refer to Wiring Diagrams.

HEADLAMP (Continued)

CONDITION	POSSIBLE CAUSES	CORRECTION
HEADLAMPS ARE DIM WITH ENGINE RUNNING EVEN ABOVE IDLE.*	1. Charging system output too low.	1. Test and repair charging system. Refer to Charging Systems.
	2. Poor lighting circuit Z1 - ground.	2. Test for voltage drop across Z1 - ground locations. Refer to Wiring Diagrams.
	3. High resistance in headlamp circuit.	3. Test amperage draw of headlamp circuit.
	4. Both headlamp bulbs defective.	4. Replace both headlamp bulbs.
HEADLAMPS FLASH RANDOMLY.	1. Poor lighting circuit Z1 - ground.	1. Test for voltage drop across Z1 - ground locations. Refer to Wiring Diagrams.
	2. High resistance in headlamp circuit.	2. Test amperage draw of headlamp circuit. Should not exceed 30 amps.
	3. Faulty headlamps switch circuit breaker.	3. Replace headlamp switch.
	4. Loose or corroded terminals or splices in circuit.	4. Inspect and repair all connectors and splices. Refer to Wiring Diagrams.
HEADLAMPS DO NOT ILLUMINATE.	1. No voltage to headlamps.	1. Repair open headlamp circuit. Refer to Wiring Diagrams.
	2. No Z1 - ground at headlamps.	2. Repair circuit ground. Refer to Wiring Diagrams.
	3. Faulty headlamp switch.	3. Replace headlamp switch.
	4. Faulty headlamp dimmer (multi-function) switch.	4. Replace multi-function switch.
	5. Broken connector terminal or wire splice in headlamp circuit.	5. Repair connector terminal or wire splice.
(DRL EQUIPPED VEHICLES) HEADLAMPS STAY ON WITH KEY REMOVED.	Failed DRL module.	Replace DRL module.
*Canada vehicles must have lamps ON.		

REMOVAL

(1) Remove headlamp access cover in splash shield (Fig. 12).
(2) Rotate socket counterclockwise one quarter turn.
(3) Remove bulb and socket from headlamp housing.
(4) Disconnect wire connector from back of headlamp high or low beam bulb.

INSTALLATION

CAUTION: Do not touch the glass of halogen bulbs with fingers or other possibly oily surface, reduced bulb life will result.

(1) Connect wire connector to the back of headlamp high or low beam bulb.
(2) Install bulb into headlamp housing (Fig. 12)
(3) Rotate socket clockwise one quarter turn.
(4) Test operation of lamps.
(5) Install headlamp access cover into splash shield.

HEADLAMP (Continued)

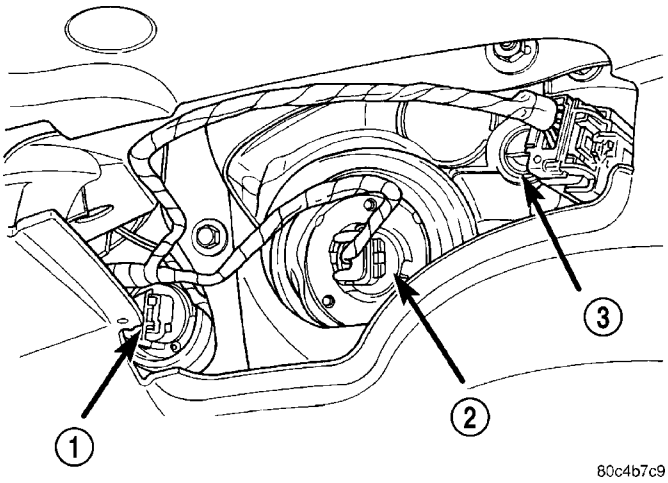

Fig. 12 HEADLAMP BULB ACCESS

1 - HIGH BEAM LAMP
2 - LOW BEAM LAMP
3 - PARK/TURN SIGNAL LAMP

HEADLAMP UNIT

STANDARD PROCEDURE

STANDARD PROCEDURE - HEADLAMP UNIT ALIGNMENT

ALIGNMENT SCREEN PREPARATION

(1) Position vehicle on a level surface perpendicular to a flat wall 7.62 meters (25 ft.) away from front of headlamp lens.

(2) If necessary, tape a line on the floor 7.62 meters (25 ft.) away from and parallel to the wall (Fig. 13).

(3) From the floor up 65.8 Centimeters (26 in.), tape a vertical line on the wall at the center line of the vehicle. Sight along the center line of the vehicle (from rear of vehicle forward) to verify accuracy of the line placement.

(4) Rock vehicle side-to-side three times to allow suspension to stabilize.

(5) Jounce front suspension three times by pushing downward on front bumper and releasing.

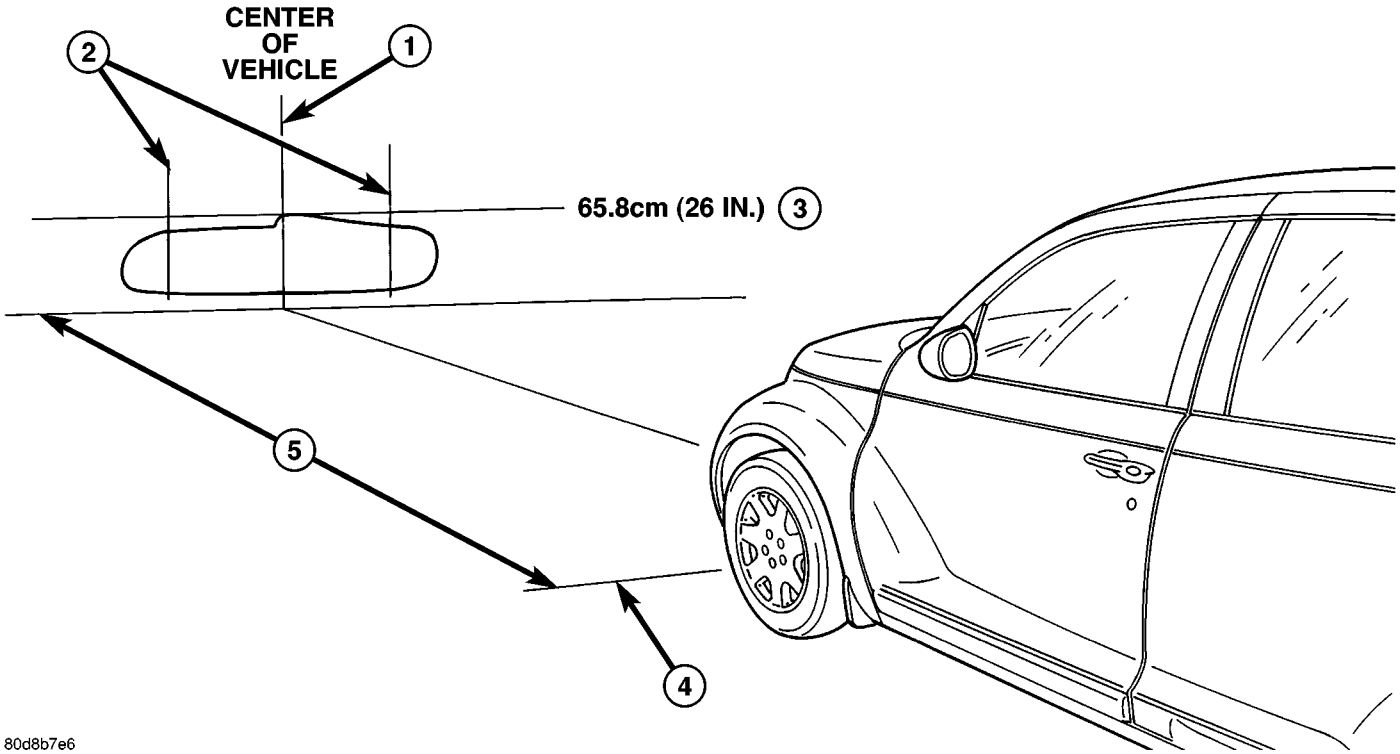

Fig. 13 HEADLAMP UNIT ALIGNMENT SCREEN

1 - CENTER OF VEHICLE
2 - CENTER OF HEADLAMPS
3 - 65.8cm (26 IN.) OR HEIGHT OF LOW BEAM DOT ON FOG LAMP UNIT LENS
4 - FRONT OF HEADLAMP
5 - 7.62 METERS (25 FT.)

HEADLAMP UNIT (Continued)

(6) A small dot is molded into each headlamp lens signifying the center of the low-beam headlamp. Measure the distance from the center of the headlamp to the floor. Transfer measurement to the alignment screen (with tape). Use this line for up/down adjustment reference.

HEADLAMP UNIT ALIGNMENT

The headlamp low beam pattern has a distinct horizontal cutoff line which is used to visually align the headlamps. A properly aimed headlamp will have the top of the horizontal cut off line of the low beam pattern aligned with the horizontal line on the wall (Fig. 13). The high beams on a vehicle with aero headlamps cannot be aligned. The high beam pattern should be correct when the low beams are aligned properly.

To adjust headlamp unit alignment, rotate alignment screw to achieve the specified low beam hot spot pattern.

STANDARD PROCEDURE - HEADLAMP UNIT ALIGNMENT - EXPORT

VEHICLE PREPARATION FOR HEADLAMP UNIT ALIGNMENT

(1) Verify headlamp dimmer switch and high beam indicator operation.

(2) Verify that the headlamp leveling switch is in the “0” position.

(3) Inspect and correct damaged or defective components that could interfere with proper headlamp alignment.

(4) Verify proper tire inflation.

(5) Clean headlamp lenses.

(6) Verify that luggage area is loaded as the vehicle is routinely used.

(7) Fuel tank should be FULL. Add 2.94 kg (6.5 lbs.) of weight over the fuel tank for each estimated gallon of missing fuel.

ALIGNMENT SCREEN PREPARATION

(1) Position vehicle on a level surface perpendicular to a flat wall 10 meters (32.8 ft.) away from front of headlamp lens (Fig. 14).

(2) Place 75 kg in the driver's seat to simulate the ride height of the vehicle when driven.

(3) If necessary, tape a line on the floor 10 meters (32.8 ft.) away from and parallel to the wall.

(4) From the floor up 1.27 meters (5 ft.), tape a vertical line on the wall at the centerline of the vehicle. Sight along the centerline of the vehicle (from rear of vehicle forward) to verify accuracy of the line placement.

(5) Rock vehicle side-to-side three times and allow suspension to stabilize.

(6) Jounce front suspension three times by pushing downward on front bumper and releasing.

(7) Measure the distance from the center of headlamp low beam dot on the lens to the floor. Transfer measurement to the alignment screen (with tape). Use this line for up/down adjustment reference.

(8) Place a tape line 130 mm below and parallel to the center of headlamp line.

(9) Measure distance from the centerline of the vehicle to the center of each headlamp being aligned. Transfer measurements to screen (with tape) to each side of vehicle centerline. Use these lines for left/right adjustment reference.

HEADLAMP UNIT ALIGNMENT

A properly aimed low beam headlamp will project a high intensity light pattern on the screen with the horizontal cut-off line aligned with the tape line 100 mm (3.94 in.) below the headlamp centerline (Fig. 14). The intersection of the horizontal and 15 degree cut-off lines in the projected pattern should align to the intersection of the headlamp centerline vertical tape line and the tape line 100 mm (3.94 in.) below the headlamp horizontal centerline. The high beams on a vehicle with aero headlamps cannot be aligned. The high beam pattern should be correct when the low beams are aligned properly.

To adjust headlamp unit alignment, rotate the alignment screws **(horizontal and vertical**) to achieve the specified low beam spot pattern. The alignment screws are located in the front of the headlamp unit, just below the lens.

REMOVAL

(1) Raise vehicle on a hoist.

(2) Remove wheel and tire.

(3) Remove splash shield as necessary to access headlamp housing.

(4) Remove grille.

(5) Remove the two fascia bolts from behind the grille (Fig. 15) and (Fig. 16).

(6) Remove fasteners attaching fender to fascia on the side being worked on.

(7) Remove the three fasteners holding the lower fascia to the lower radiator crossmember.

(8) Remove four nuts attaching headlamp housing (Fig. 17).

(9) Remove headlamp housing by lowering the fascia as necessary (Fig. 18) and (Fig. 19).

(10) Disconnect wire connector.

HEADLAMP UNIT (Continued)

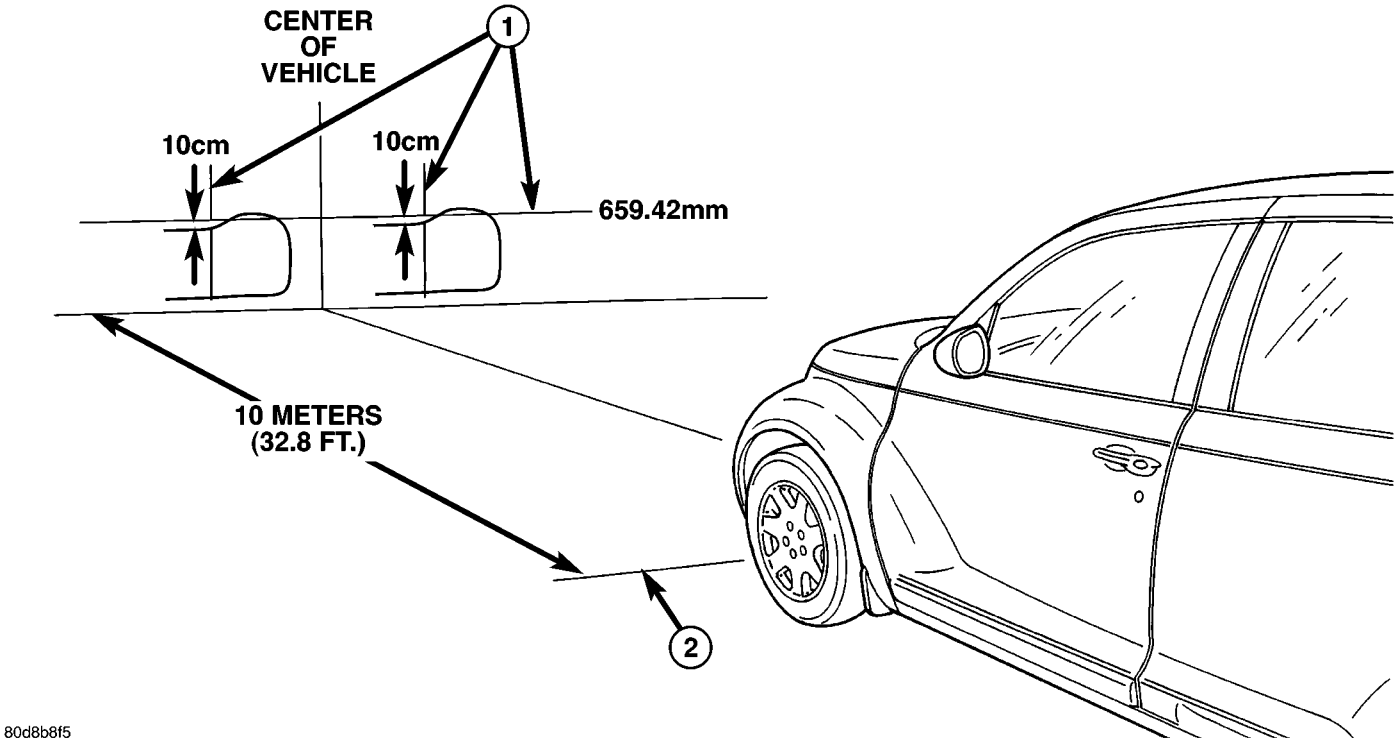

Fig. 14 HEADLAMP UNIT ALIGNMENT SCREEN - EXPORT

1 - CENTER OF HEADLAMPS
2 - FRONT OF HEADLAMP

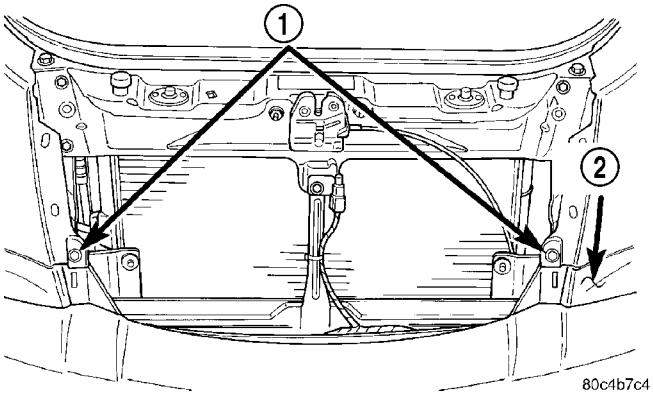

Fig. 15 FASCIA CENTER ATTACHING POINT

1 - ATTACHING POINTS
2 - FRONT FASCIA

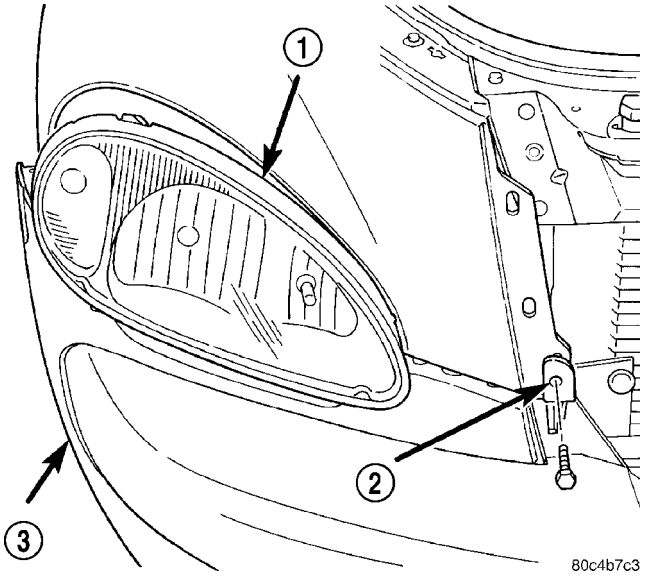

Fig. 16 LOOSENING THE FASCIA

1 - HEADLAMP HOUSING
2 - ATTACHING POINT
3 - FRONT FASCIA

HEADLAMP UNIT (Continued)

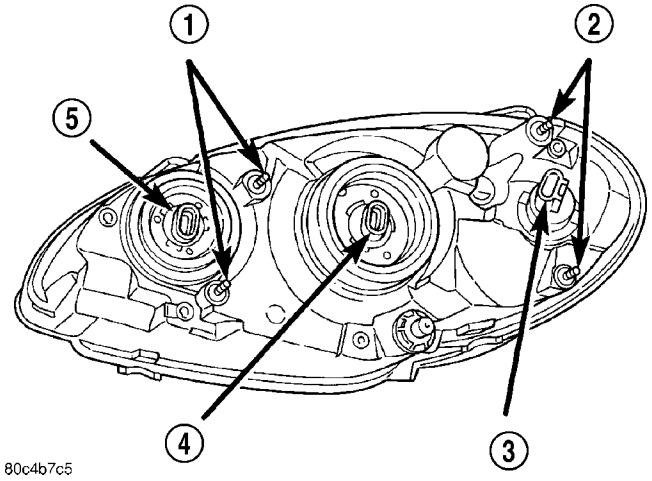

Fig. 17 HEADLAMP UNIT HOUSING

1 - ATTACHING STUDS
2 - ATTACHING STUDS
3 - FRONT SIDE MARKER/TURN SIGNAL/PARK LAMP BULB
4 - LOW BEAM LAMP
5 - HIGH BEAM LAMP

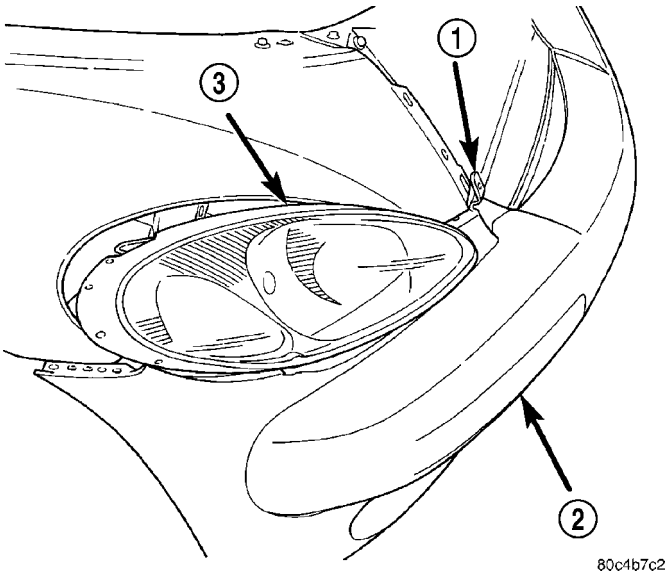

Fig. 18 HEADLAMP UNIT REMOVAL

1 - FASCIA FASTENER
2 - FRONT FASCIA
3 - HEADLAMP UNIT

INSTALLATION

CAUTION: Do not touch the glass of halogen bulbs with fingers or other possibly oily surface, reduced bulb life will result.

(1) Connect wire connectors to the back of headlamp housing.

(2) Place headlamp housing in to position, lower fascia as necessary to install headlamp housing in to position (Fig. 19) and (Fig. 18). Tilt headlamp unit to opening as necessary.

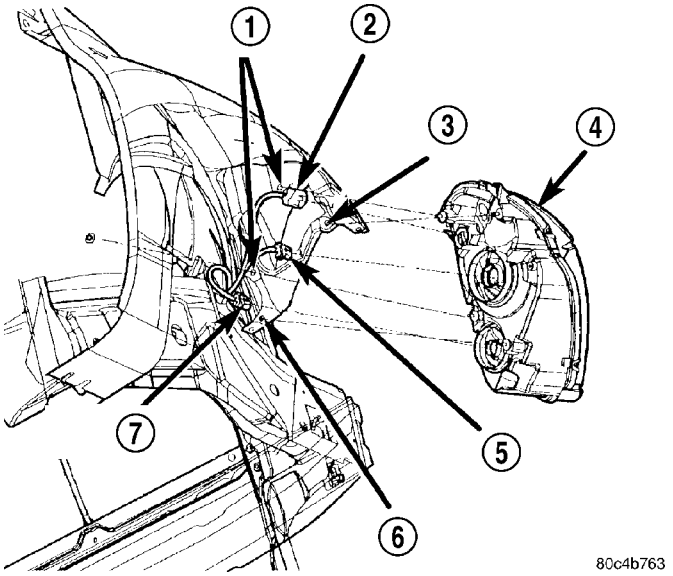

Fig. 19 HEADLAMP UNIT REMOVAL

1 - MOUNTING HOLES
2 - FRONT SIDE MARKER/PARK/TURN SIGNAL LAMP
3 - MOUNTING HOLES
4 - HEADLAMP HOUSING
5 - LOW BEAM CONNECTOR
6 - MOUNTING HOLE
7 - HIGH BEAM CONNECTOR

(3) Install nut(s) attaching headlamp housing (Fig. 17).

(4) Test lamp operation.

(5) Install fasteners attaching fender to fascia on the side being work on.

(6) Install the two fascia bolts from behind the grille (Fig. 15) and (Fig. 16).

(7) Install three fasteners to hold the lower fascia to the lower radiator crossmember.

(8) Install grille.

(9) Install splash shield as necessary to access headlamp housing.

(10) Install wheel and tire.

(11) Lower vehicle.

HEADLAMP LEVELING MOTOR - EXPORT

DESCRIPTION

The Headlamp Leveling System allows the driver to adjust the headlamp beam pattern from the interior of the vehicle to compensate for passenger or cargo load. Only the vertical axis of the headlamp beam can be adjusted.

A headlamp leveling switch is located on the instrument panel and controls the headlamp leveling motors found on the headlamp unit. The headlamp leveling switch has four settings 0-3, 0 being the low-

HEADLAMP LEVELING MOTOR - EXPORT (Continued)

est, 3 being the highest headlight beam vertical setting.

When performing a headlamp beam pattern alignment on a vehicle equipped with headlamp leveling, be certain the headlamp leveling switch is in the “0” position before starting. Failure to do so will result in and incorrect headlamp unit alignment.

OPERATION

With the rotation of the headlamp leveling switch control knob, voltage is adjusted at the headlamp leveling switch (rheostat). This signals the headlamp leveling motors to adjust the vertical headlamp beam pattern accordingly. Headlamps must be ON in order for the leveling system to function.

DIAGNOSIS AND TESTING - HEADLAMP LEVELING MOTOR - EXPORT

NOTE: The battery must be completely charged (12.4v) prior to testing. It may also be necessary to install a battery charger on the vehicles electrical system when performing this test.

(1) Rotate the headlamp switch (low beam) to the ON position.

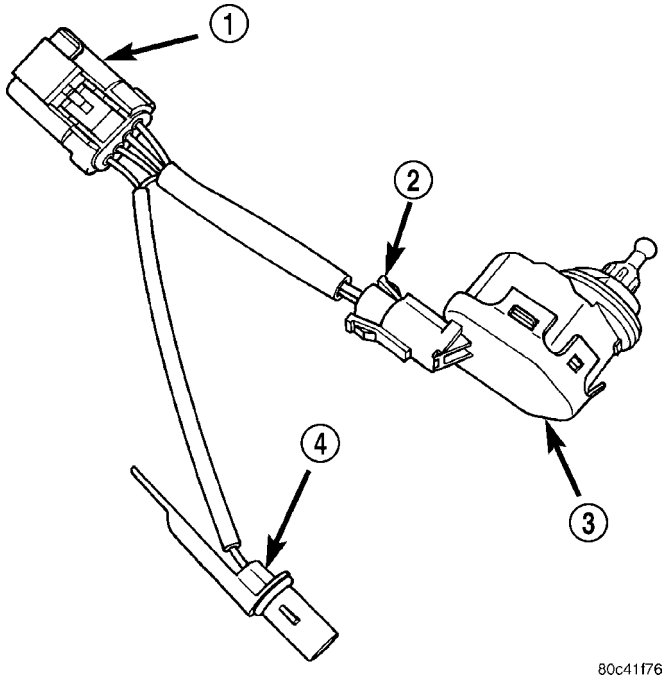

Fig. 20 LAMP WIRE HARNESS JUMPER - EXPORT

1 - FRONT LAMP JUMPER-BUX
2 - HEADLAMP LEVELING MOTOR CONNECTOR
3 - HEADLAMP LEVELING MOTOR
4 - FRONT POSITION LAMP SOCKET

(2) Disconnect the headlamp wire harness jumper electrical connector (Fig. 20). This connector can be accessed by opening the lamp access panel, found in the appropriate front wheel well splash shield.

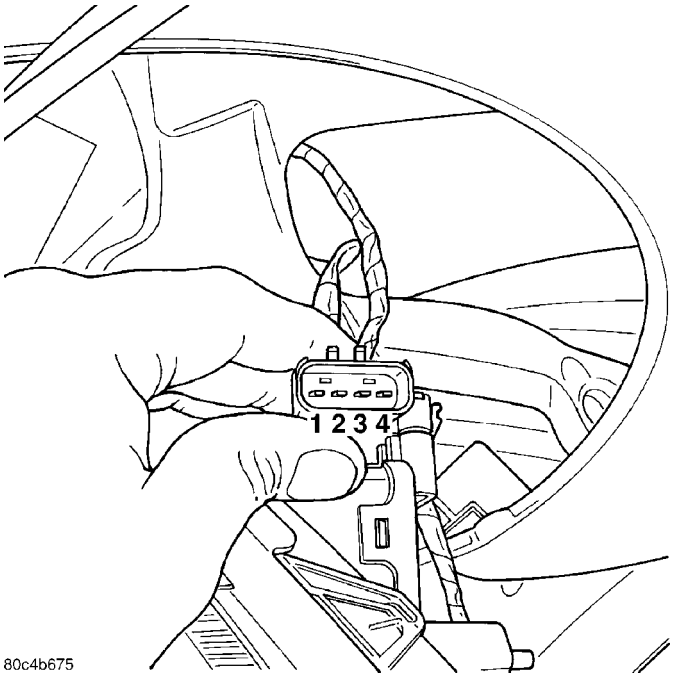

Fig. 21 WIRE HARNESS PIN-OUT - EXPORT

(3) Check PIN #1 for battery voltage (Fig. 21). If no voltage is present, trace circuit until open or short is found. Refer to Wiring Diagrams for complete schematic.

(4) Check PIN #2 for ground (Fig. 21). If ground is not present, trace circuit until open or short is found. Refer to Wiring Diagrams for complete schematic.

(5) Check PIN #3 for headlamp leveling sense voltage (2.83 – 8.60v) (Fig. 21). If voltage is incorrect or not present, trace circuit until open or short is found. (Refer to 8 - ELECTRICAL/LAMPS/LIGHTING - EXTERIOR/HEADLAMP LEVELING SWITCH - DIAGNOSIS AND TESTING) for further information.

(6) If no open or short is found, and headlamp leveling system is still inoperative, replace the headlamp leveling motor (Refer to 8 - ELECTRICAL/LAMPS/LIGHTING - EXTERIOR/HEADLAMP LEVELING MOTOR - REMOVAL).

REMOVAL

(1) Remove headlamp unit (Refer to 8 - ELECTRICAL/LAMPS/LIGHTING - EXTERIOR/HEADLAMP UNIT - REMOVAL).

(2) Disconnect headlamp leveling motor electrical connector.

(3) Rotate leveling motor one quarter turn counterclockwise. This will free leveling motor housing from the headlamp unit.

HEADLAMP LEVELING MOTOR - EXPORT (Continued)

(4) Pull leveling motor straight from headlamp unit. Significant force will be required to unsnap motor control arm from lens reflector.

NOTE: The headlamp leveling motor control arm is snapped into the lens reflector mechanism very securely. Use a firm, steady pull to disengage motor arm from reflector.

(5) Remove leveling motor from headlamp unit.

INSTALLATION

(1) While holding headlamp reflector assembly still, push leveling motor until control arm is fully seated into reflector mechanism. An audible “snap” will be heard.

(2) Push and rotate leveling motor one quarter turn clockwise to lock motor to the headlamp unit.

(3) Connect headlamp leveling motor electrical connector.

(4) Install headlamp unit in the vehicle (Refer to 8 - ELECTRICAL/LAMPS/LIGHTING - EXTERIOR/ HEADLAMP UNIT - INSTALLATION).

HEADLAMP LEVELING SWITCH - EXPORT

DESCRIPTION

This Headlamp Leveling Switch is located in the accessory switch bezel (Fig. 22), located on the instrument panel. The switch is the primary controller of the headlamp leveling system. The leveling switch has four settings 0-3, 0 being the lowest, and 3 being the highest headlight beam vertical setting.

OPERATION

With the rotation of the headlamp leveling switch control knob (Fig. 22), voltage is adjusted at the headlamp leveling switch (rheostat). This signals the headlamp leveling motors (headlamp unit mounted) to adjust the vertical headlamp beam pattern accordingly. Headlamps must be ON in order for the leveling system to function.

DIAGNOSIS AND TESTING - HEADLAMP LEVELING SWITCH - EXPORT

(1) Disconnect and isolate the battery negative cable.

(2) Remove the center instrument panel bezel (Refer to 23 - BODY/INSTRUMENT PANEL/INSTRUMENT PANEL CENTER BEZEL - REMOVAL).

(3) Remove the accessory switch bezel retaining screws and pull bezel away from instrument panel.

(4) Disconnect the headlamp leveling switch electrical connector.

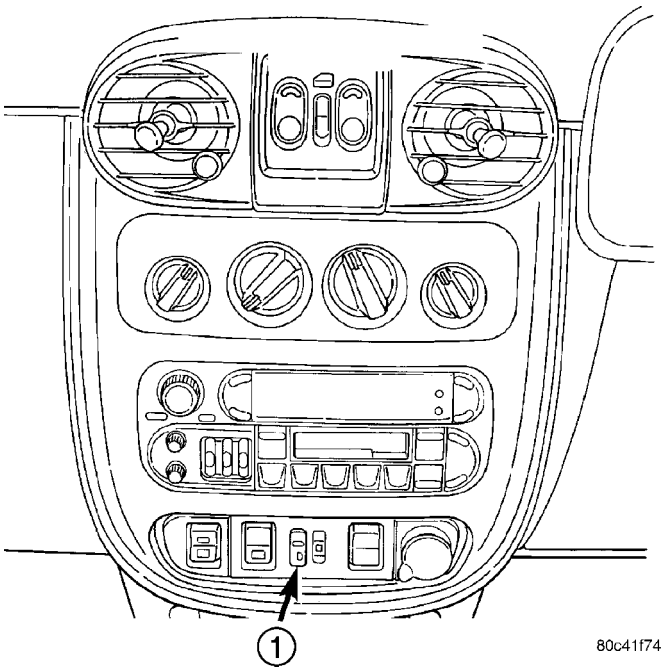

Fig. 22 HEADLAMP LEVELING SWITCH

1 - HEADLAMP LEVELING SWITCH

(5) Using an Ohmmeter and the HEADLAMP LEVELING SWITCH RESISTANCE table, check the resistance between switch connector pins 1 and 2 (Fig. 23).

(6) If the test results are **NOT** as indicated in the HEADLAMP LEVELING SWITCH RESISTANCE table, replace the switch. If test results **ARE** as indicated in the HEADLAMP LEVELING SWITCH RESISTANCE table, the switch is OK at this time. (Refer to 8 - ELECTRICAL/LAMPS/LIGHTING - EXTERIOR/HEADLAMP LEVELING MOTOR - DIAGNOSIS AND TESTING) for further diagnosis.

HEADLAMP LEVELING SWITCH RESISTANCE

SWITCH POSITION	RESISTANCE BETWEEN PINS 1&2
0	0.752Ω
1	0.564Ω
2	348.8Ω
3	249.2Ω

REMOVAL

(1) Disconnect and isolate the battery negative cable.

(2) Remove the center instrument panel bezel (Refer to 23 - BODY/INSTRUMENT PANEL/INSTRUMENT PANEL CENTER BEZEL - REMOVAL).

(3) Remove the accessory switch bezel retaining screws (Fig. 24) and pull bezel away from the instrument panel.

HEADLAMP LEVELING SWITCH - EXPORT (Continued)

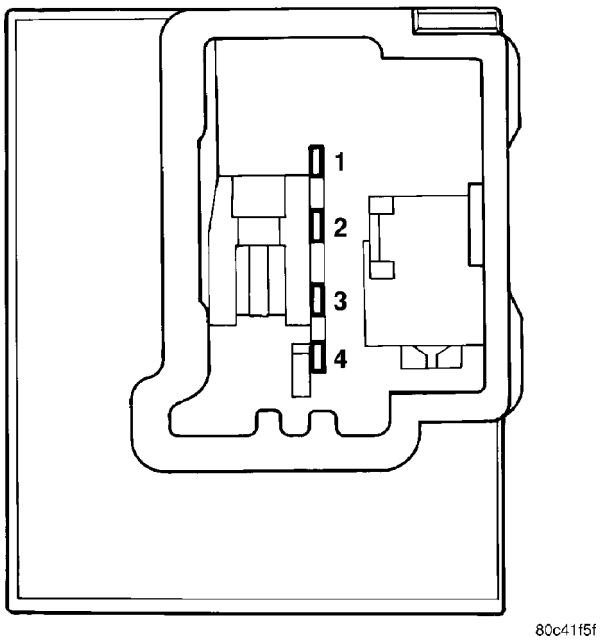

Fig. 23 HEADLAMP LEVELING SWITCH

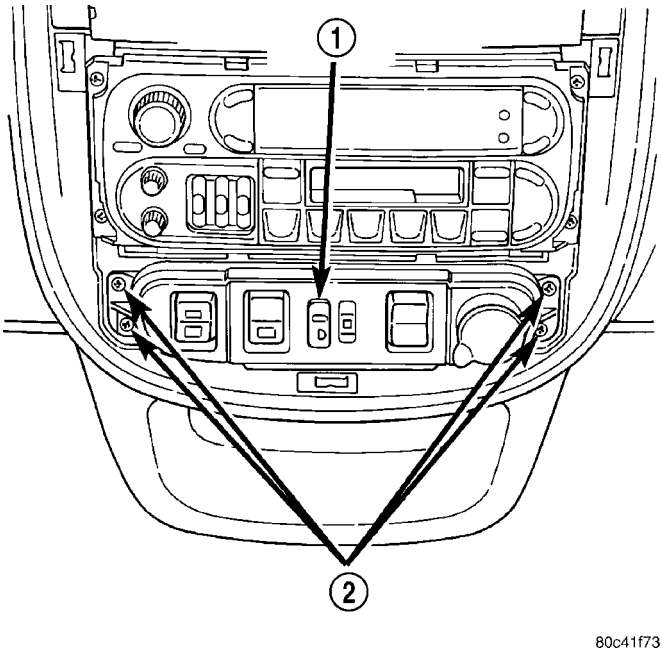

Fig. 24 ACCESSORY SWITCH BEZEL RETAINING SCREWS

1 - HEADLAMP LEVELING SWITCH
2 - ACCESSORY SWITCH BEZEL RETAINING SCREWS

(4) Disconnect the headlamp leveling switch electrical connector. Depress release tab and pull straight apart.

(5) Remove the headlamp leveling switch from the accessory switch bezel.

INSTALLATION

(1) Connect the headlamp leveling switch electrical connector.

(2) Install the headlamp leveling switch in the accessory switch bezel.

(3) Position and install the accessory switch bezel retaining screws (Fig. 24).

(4) Install the center instrument panel bezel (Refer to 23 - BODY/INSTRUMENT PANEL/INSTRUMENT PANEL CENTER BEZEL - INSTALLATION).

(5) Connect the battery negative cable.

(6) Verify headlamp leveling system operation.

HEADLAMP SWITCH

DESCRIPTION

The headlamp switch is integral to the left stalk of the multi-function switch (Fig. 26), on the steering column, behind the steering wheel. A knob on the end of the left control stalk controls all of the exterior lighting functions.

OPERATION

Turn the end of the control lever to the first detent for parking light operation and for headlamp operation, to the second detent. To activate the front fog lights, turn ON the parking lights or the low beam headlights and pull out the end of the control lever.

The headlamp switch is part of the multi-function switch (Refer to 8 - ELECTRICAL/LAMPS/LIGHTING - EXTERIOR/MULTI-FUNCTION SWITCH - DIAGNOSIS AND TESTING). The headlamp switch cannot be repaired. If found defective, it must be replaced.

LICENSE PLATE LAMP

REMOVAL

(1) Remove screws attaching license plate lamp to rear bumper (Fig. 25).

(2) Remove lamp from bumper.

(3) Remove bulb socket from lamp housing.

(4) Pull bulb from socket.

INSTALLATION

(1) Install bulb into socket (Fig. 25).

(2) Install bulb socket into lamp.

(3) Place lamp in position.

(4) Install screws attaching license plate lamp to rear bumper.

LICENSE PLATE LAMP (Continued)

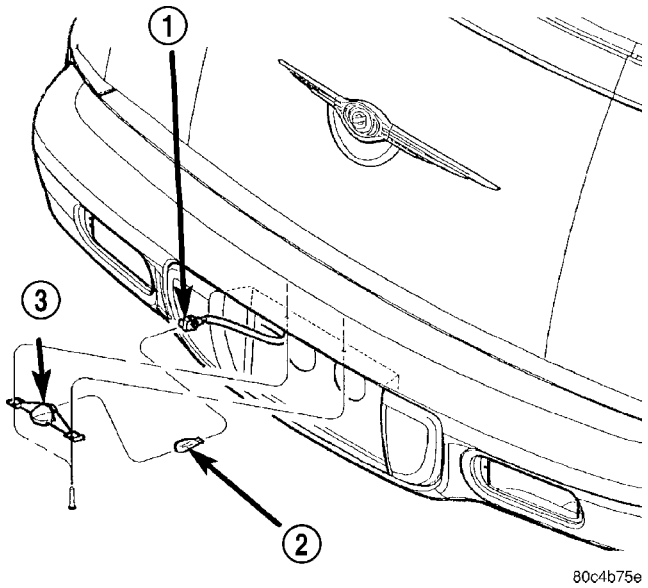

Fig. 25 LICENSE PLATE LAMP

1 - CONNECTOR
2 - BULB
3 - LICENSE PLATE LAMP

LICENSE PLATE LAMP UNIT

REMOVAL

(1) Remove screws attaching license plate lamp to rear bumper (Fig. 25).

(2) Remove lamp from bumper.

(3) Disconnect wire connector and bulb.

INSTALLATION

(1) Connect wire connector and bulb (Fig. 25).

(2) Place lamp in position.

(3) Install screws attaching license plate lamp to rear bumper.

MULTI-FUNCTION SWITCH

DESCRIPTION

MULTI-FUNCTION SWITCH

The turn signals are part of the multi-function switch which contains (Fig. 26):

- Electrical circuitry for turn signals
- Hazard warning switch
- Headlamp switch
- Fog Lamp Switch
- Headlamp beam select switch
- Optical Horn
- Instrument Panel Lamp Dimmer/Interior Lamp Switch
- Combination Flasher

The integrated turn signal switch assembly is mounted to the left hand side of the steering column.

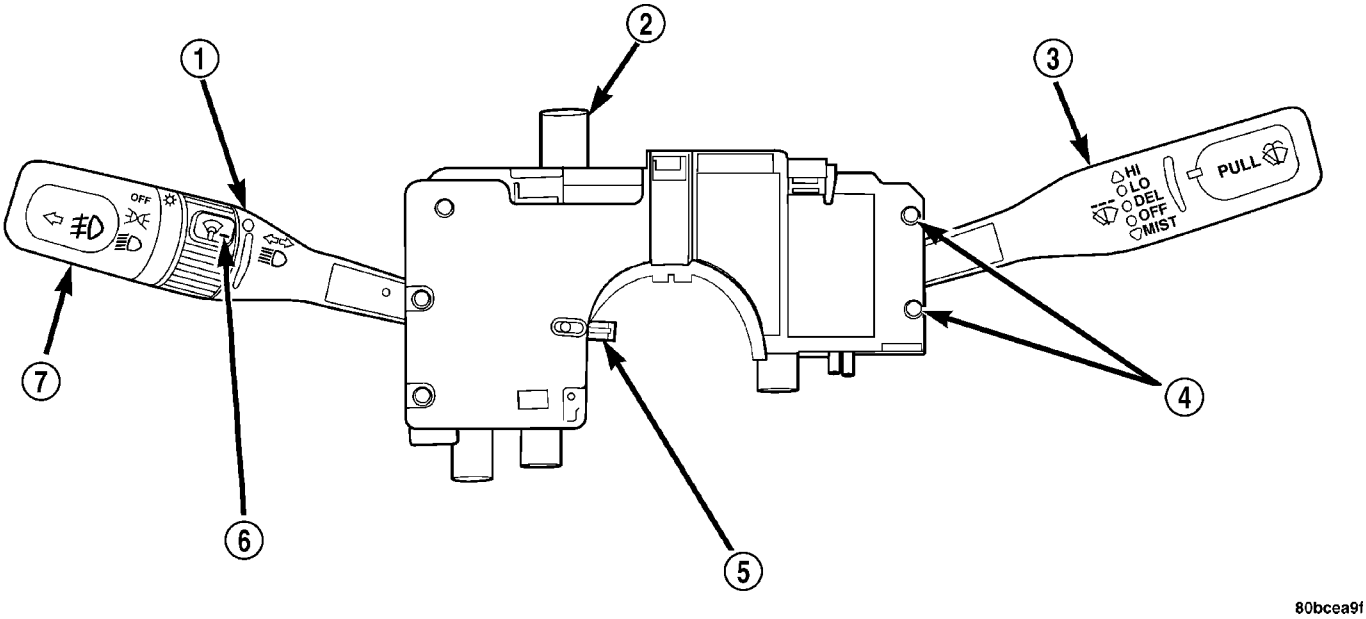

Fig. 26 MULTI-FUNCTION SWITCH

1 - TURN SIGNAL CONTROL STALK
2 - HAZARD WARNING SWITCH
3 - WINDSHIELD WIPER/WASHER CONTROL
4 - WINDSHIELD WIPER/WASHER SWITCH RETAINING SCREWS
5 - CANCELLING CAM
6 - PANEL DIMMER/INTERIOR LIGHT SWITCH
7 - EXTERIOR LIGHTING CONTROL/FOG LAMP

MULTI-FUNCTION SWITCH (Continued)

HAZARD WARNING SYSTEM

The hazard warning system is actuated by a push button located in the multi-function switch (Fig. 26) on the top of the steering column between the steering wheel and the instrument panel. The hazard switch is identified with a double triangle on front of the button.

The hazard warning system allows the vehicle operator to provide the drivers of other vehicles in near proximity an optical indication that the vehicle is disabled or is an obstacle to traffic flow. Unlike the turn signal system, the hazard warning system has battery current at all times, regardless of ignition switch position.

OPERATION

MULTI-FUNCTION SWITCH

When the driver wishes to signal his intentions to change direction of travel, he moves the lever upward to cause the right signals to flash and downward to cause the left signals to flash. After completion of a turn the system is deactivated automatically. As the steering wheel returns to the straight ahead position, a canceling cam molded to the clockspring mechanism comes in contact with the cancel actuator on the turn signal multi-function switch assembly. The cam lobe, pushing on the cancel actuator, returns the switch to the off position.

If only momentary signaling such as indication of a lane change is desired, the switch is actuated to a left or right intermediate detent position. In this position the signal lamps flash as described above, but the switch returns to the OFF position as soon as the lever is released.

When the system is activated, one of two indicator lamps mounted in the instrument cluster flashes in unison with the turn signal lamps, indicating to the driver that the system is operating.

HAZARD WARNING SYSTEM

When the hazard warning system is activated, the combination flasher will cause both the right and left side turn signal indicator lamps, front park/turn signal lamps, front side marker lamps and rear turn signal lamps to flash on and off. If the exterior lamps are turned off, the front park/turn signal lamps and the front side marker lamps will flash in unison. If the exterior lamps are turned on, the front park/turn signal lamps and the side marker lamps will flash alternately.

DIAGNOSIS AND TESTING - MULTI-FUNCTION SWITCH

FLASHER DIAGNOSIS

Should any function of the multi-function switch fail, the entire switch assembly must be replaced (Refer to 8 - ELECTRICAL/LAMPS/LIGHTING - EXTERIOR/MULTI-FUNCTION SWITCH - REMOVAL).

TURN SIGNAL AND FLASHER DIAGNOSIS

CONDITION	POSSIBLE CAUSES	CORRECTION
TURN SIGNAL FLASHES AT TWICE THE NORMAL RATE.	(1) FAULTY EXTERNAL LAMP.	(1) REPLACE LAMP.
	(2) POOR GROUND AT LAMP.	(2) CHECK AND/OR REPAIR WIRING.
	(3) OPEN CIRCUIT IN WIRING TO EXTERNAL LAMP.	(3) REPAIR WIRING HARNESS. CHECK CONNECTORS.
	(4) FAULTY CONTACT IN SWITCH.	(4) REPLACE MULTI FUNCTION SWITCH.
INDICATOR LAMP ILLUMINATED BRIGHTLY, EXTERNAL LAMP GLOWS DIMLY AT A RAPID RATE.	(1) LOOSE OR CORRODED EXTERNAL LAMP CONNECTION.	(1) REPLACE SOCKET CONNECTION.
	(2) POOR GROUND CIRCUIT AT EXTERNAL LAMP.	(2) REPAIR WIRING HARNESS. CHECK CONNECTORS.
	(3) OPEN INSTRUMENT CLUSTER.	(3) REPLACE INSTRUMENT CLUSTER.

MULTI-FUNCTION SWITCH (Continued)

CONDITION	POSSIBLE CAUSES	CORRECTION
HAZARD WARNING SYSTEM DOES NOT FLASH.	(1) FAULTY FUSE.	(1) REPLACE FUSE.
	(2) FAULTY FLASHER.	(2) REPLACE FLASHER.
	(3) OPEN CIRCUIT IN FEED WIRE TO SWITCH.	(3) REPAIR WIRING HARNESS, CHECK CONNECTORS.
	(4) FAULTY CONTACT IN SWITCH.	(4) REPLACE MULTI FUNCTION SWITCH.
	(5) OPEN OR GROUNDED CIRCUIT IN WIRING TO EXTERNAL LAMPS.	(5) REPAIR WIRING HARNESS.
INDICATOR LAMP ILLUMINATES BRIGHTLY, EXTERNAL LAMP DOES NOT LIGHT.	(1) OPEN CIRCUIT IN WIRE TO EXTERNAL LAMP.	(1) REPAIR WIRING HARNESS.
	(2) BURNED OUT LAMP.	(2) REPLACE LAMP.
SYSTEM DOES NOT FLASH ON EITHER SIDE.	(1) FAULTY FUSE.	(1) REPLACE FUSE.
	(2) FAULTY FLASHER UNIT.	(2) REPLACE FLASHER.
	(3) LOOSE BULKHEAD CONNECTOR.	(3) TIGHTEN CONNECTOR.
	(4) LOOSE OR FAULTY REAR WIRING HARNESS OR TERMINALS.	(4) REPAIR WIRING HARNESS.
	(5) OPEN CIRCUIT TO FLASHER UNIT.	(5) CHECK CONNECTORS, REPAIR WIRING HARNESS.
	(6) OPEN CIRCUIT IN FEED WIRE TO TURN SIGNAL SWITCH.	(6) CHECK CONNECTORS, REPAIR WIRING HARNESS.
	(7) FAULTY SWITCH CONNECTION IN SWITCH.	(7) REPLACE MULTI FUNCTION SWITCH.
	(8) OPEN OR GROUNDED CIRCUIT IN WIRING TO EXTERNAL LAMPS.	(8) REPAIR WIRING HARNESS.
SYSTEM DOES NOT CANCEL AFTER COMPLETION OF THE TURN.	(1) BROKEN CANCELLING FINGER ON SWITCH.	(1) REPLACE MULTI FUNCTION SWITCH.
	(2) BROKEN OR MISSING CANCELLING CAM ON CLOCKSPRING.	(2) REPLACE CLOCKSPRING.
EXTERNAL LAMPS OPERATE PROPERLY, NO INDICATOR LAMP OPERATION.	(1) FAULTY INDICATOR LAMP IN INSTRUMENT CLUSTER.	(1) REPLACE LAMP.
	(2) OPEN CIRCUIT OR WIRING.	(2) REPAIR WIRING HARNESS.

MULTI-FUNCTION SWITCH (Continued)

SWITCH DIAGNOSIS

(1) Disconnect and isolate the battery negative cable (Fig. 27).

(2) Remove the upper and lower steering column shrouds.

(3) Disconnect the switch connector.

Using an ohmmeter, test for continuity between the terminals of the switch as shown in the MULTI-FUNCTION SWITCH CONTINUITY TEST table for diagnosis. Refer to (Fig. 28), (Fig. 29), and (Fig. 30) for connector terminal locations.

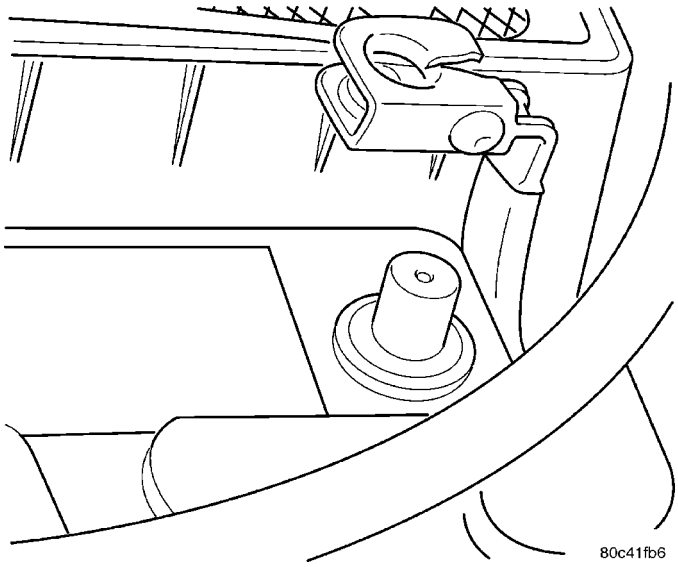

Fig. 27 BATTERY NEGATIVE CABLE REMOVE/ INSTALL

MULTI-FUNCTION SWITCH CONTINUITY TEST

SWITCH POSITION	MODE	CONTINUITY BETWEEN
TURN SIGNAL IN NEUTRAL, HAZARD WARNING SWITCH OFF	NEUTRAL	B-1 AND B-4 B-4 AND B-5 B-1 AND B-5 B-18 AND B-19
TURN SIGNAL ON, HAZARD WARNING SWITCH OFF	LEFT TURN	A-2 AND B-2 A-2 AND B-4 B-1 AND B-5 B-2 AND B-4 B-18 AND B-19
	RIGHT TURN	A-2 AND B-5 A-2 AND B-6 B-1 AND B-4 B-5 AND B-6 B-18 AND B-19

MULTI-FUNCTION SWITCH (Continued)

SWITCH POSITION	MODE	CONTINUITY BETWEEN
TURN SIGNAL IN NEUTRAL, HAZARD WARNING SWITCH ON	NEUTRAL	A-2 AND B-2 A-2 AND B-4 A-2 AND B-5 A-2 AND B-6 A-3 AND A-5 A-3 AND B-7 B-2 AND B-4 B-2 AND B-5 B-4 AND B-5 B-2 AND B-6 B-4 AND B-6 B-5 AND B-6 B-18 AND B-19
HEADLAMP BEAM ON	PARK	B-9 AND B-20 B-18 AND B-19
	LOW	B-16 AND B-18 B-16 AND B-19 B-18 AND B-19
	HIGH	B-17 AND B-18 B-17 AND B-19 B-18 AND B-19
OPTICAL HORN	ON	B-17 AND B-18 B-17 AND B-19 B-18 AND B-19
FRONT FOG	ON	B-13 AND B-14 B-9 AND B-10 B-18 AND B-19
REAR FOG	ON	B-9 AND B-20 B-13 AND B-14 B-12 AND B-13 B-12 AND B-14 B-16 AND B-18 B-16 AND B-19 B-18 AND B-19

MULTI-FUNCTION SWITCH (Continued)

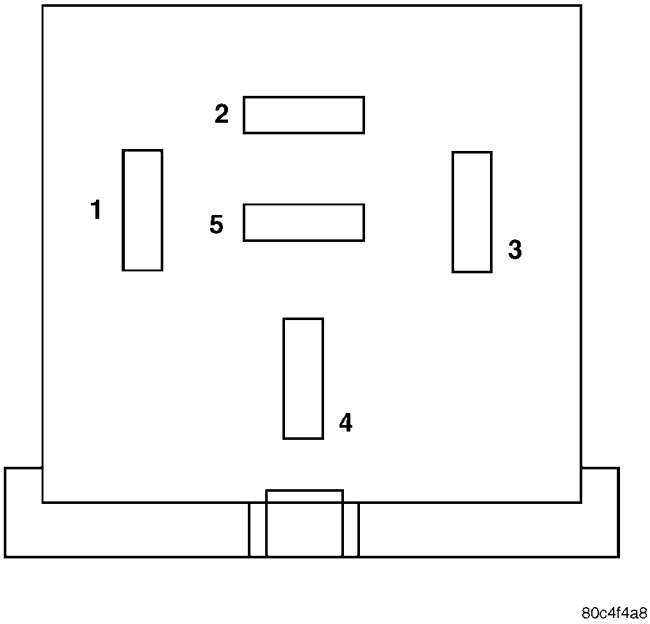

Fig. 28 COMBINATION FLASHER CONNECTOR (A)

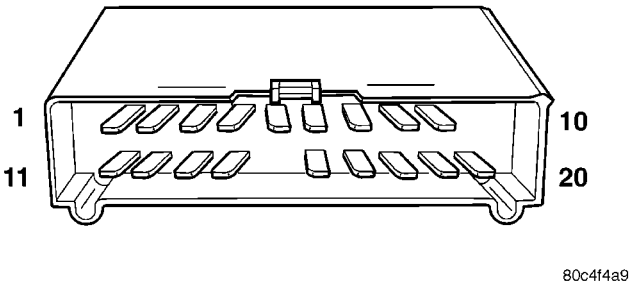

Fig. 29 MULTI-FUNCTION SWITCH CONNECTOR (B)

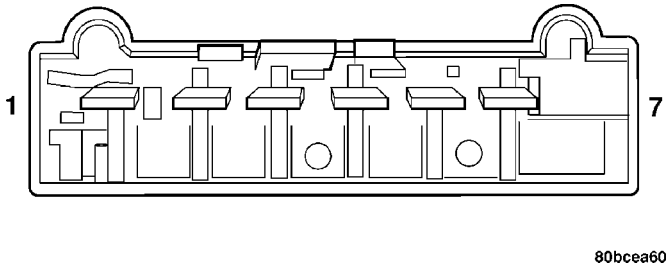

Fig. 30 WINDSHIELD WIPER/WASHER SWITCH CONNECTOR (C)

REMOVAL

(1) Open hood.

(2) Disconnect and isolate the battery negative cable (Fig. 27).

(3) Remove both upper and lower steering column shrouds.

(4) Disconnect both posi-lock harness connectors at the rear of the multi-function switch (Fig. 31)

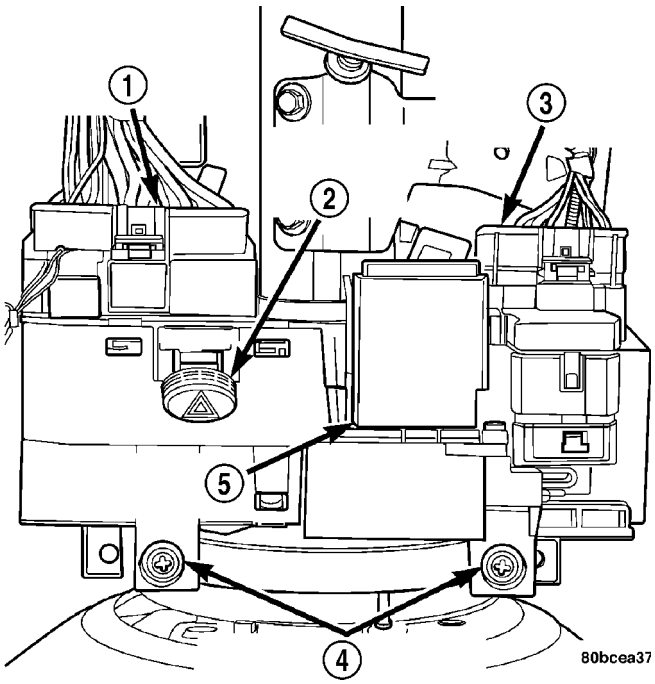

Fig. 31 MULTI-FUNCTION SWITCH REMOVE/ INSTALL

1 - MULTI-FUNCTION SWITCH CONNECTOR
2 - HAZARD/WARNING SWITCH
3 - WINDSHIELD WIPER/WASHER SWITCH CONNECTOR
4 - MOUNTING SCREWS
5 - COMBINATION FLASHER

(5) Remove multi-function switch mounting screws (Fig. 31) and remove switch from vehicle.

INSTALLATION

NOTE:
If replacing the multi-function switch, the combination flasher and windshield wiper/washer switch must be transferred to new multi-function switch. Remove the two torx screws retaining the wiper/ washer switch, place next to the new multi-function switch and install two screws.

(1) Place switch into place and install mounting screws (Fig. 31). Torque multi-function switch to column retaining screws to 3 N·m (27 in. lbs.).

(2) Connect both posi-lock harness connectors at the rear of the multi-function switch (Fig. 31)

(3) Install both upper and lower steering column shrouds.

(4) Connect the battery negative cable (Fig. 27).

(5) Close hood.

(6) Verify vehicle and system operation.

PARK/TURN SIGNAL LAMP

REMOVAL

(1) Remove headlamp access cover in splash shield (Fig. 32).

(2) Rotate socket counterclockwise one quarter turn.

(3) Remove bulb and socket from headlamp unit.

(4) Disconnect wire connector from back of front side marker/park/turn signal lamp.

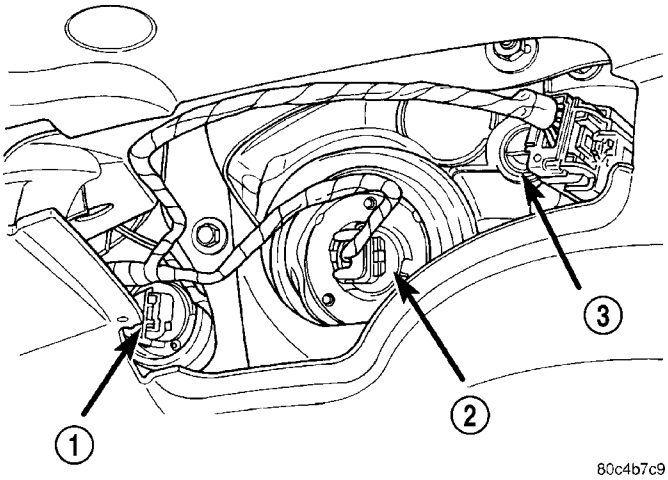

Fig. 32 HEADLAMP ACCESS

1 - HIGH BEAM LAMP
2 - LOW BEAM LAMP
3 - PARK/TURN SIGNAL LAMP

INSTALLATION

(1) Connect wire connector to the back of front side marker/park/turn signal lamp.

(2) Install bulb into headlamp unit (Fig. 32)

(3) Rotate socket clockwise one quarter turn.

(4) Test operation of lamps.

(5) Install headlamp access cover into splash shield.

REAR FOG LAMP SWITCH - EXPORT

DESCRIPTION

The rear fog lamp switch is incorporated into the multi-function switch (Fig. 33).

OPERATION

The multi-function switch contains the added circuitry for the operation of the rear fog lamp switch. While in the front fog lights position, rotate the end of the left control stalk past the headlights position to activate the rear fog lights. (Refer to 8 - ELECTRICAL/LAMPS/LIGHTING - EXTERIOR/MULTI-FUNCTION SWITCH - DIAGNOSIS AND TESTING) for rear fog lamp diagnosis.

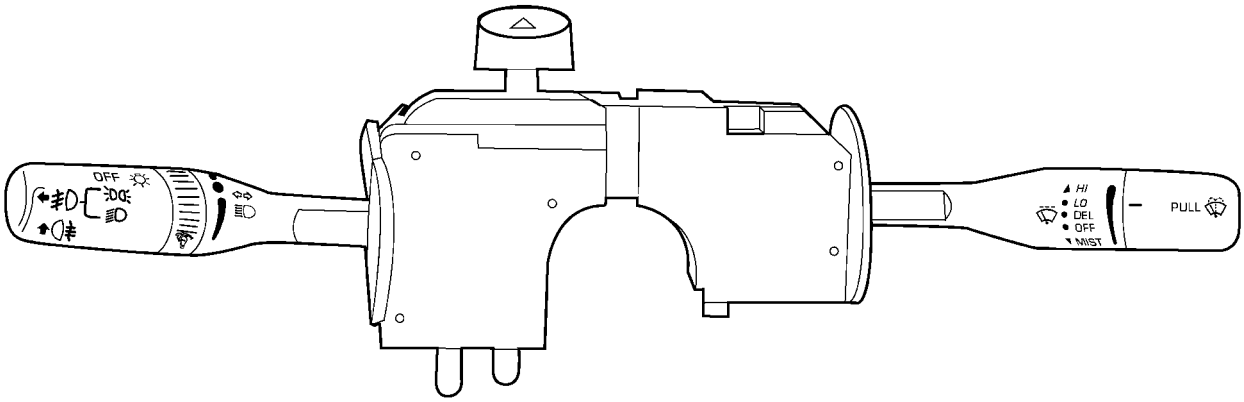

Fig. 33 MULTI-FUNCTION SWITCH WITH REAR FOG LAMP - EXPORT

SIDE REPEATER LAMP - EXPORT

DIAGNOSIS AND TESTING - SIDE REPEATER LAMP

NOTE: Battery must be completely charged (12v) prior to testing. It may also be necessary to install battery charger on the vehicles electrical system when performing this test.

(1) Remove the side repeater lamp bulb and check for burned out condition, replace bulb if necessary.

(2) If bulb appears OK, reinstall the bulb in its socket and rotate the ignition switch to the ON position. Turn the appropriate turn signal lamp ON and check for lamp operation. If lamp is still inoperative proceed to Step 3.

(3) Remove lamp bulb and check for power (12v) and ground connections in lamp socket. If power and/or ground connections are not present, trace wire until open or short is found. Refer to Wiring Diagrams for a complete system schematic.

REMOVAL

(1) Remove the appropriate front wheel well splash shield retaining screws. Reaching through wheel well, depress side repeater lamp retaining tabs and release from front fender (Fig. 34).

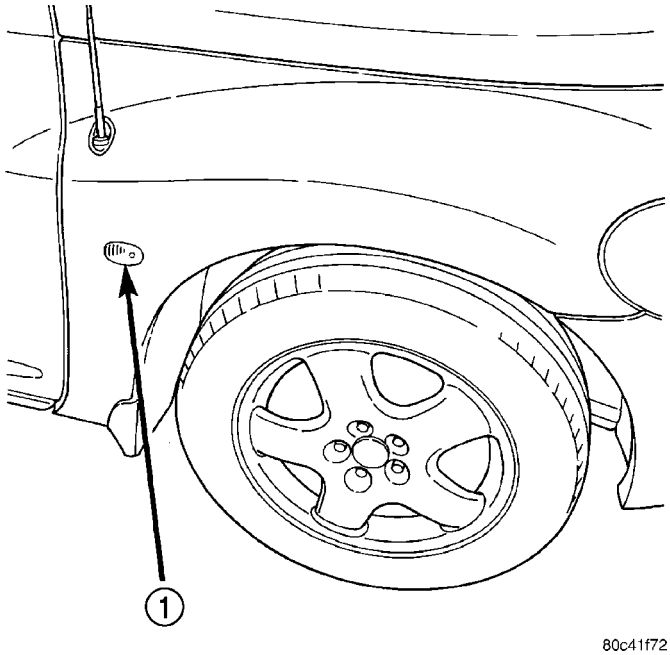

Fig. 34 SIDE REPEATER LAMP

1 - SIDE REPEATER LAMP

(2) Pull side repeater lamp out and disengage bulb socket from lamp.

(3) Rotate and pull bulb from socket.

INSTALLATION

(1) Push and twist bulb into socket.

(2) Push side repeater lamp socket into side repeater lamp unit.

(3) Position side repeater lamp unit to hole in fender.

(4) Push side repeater lamp unit to one side and seat retaining tab into fender.

(5) Verify lamp operation.

SIDE REPEATER LAMP UNIT - EXPORT

REMOVAL

(1) Remove the appropriate front wheel well splash shield retaining screws. Reaching through wheel well, depress side repeater lamp retaining tabs and release from front fender (Fig. 34).

(2) Pull side repeater lamp out and disengage bulb socket from lamp.

INSTALLATION

(1) Push side repeater lamp socket into side repeater lamp.

(2) Position side repeater lamp to hole in fender.

(3) Push side repeater lamp to one side and seat retaining tab into fender.

(4) Verify lamp operation.

TAIL LAMP

REMOVAL

(1) Remove screw attaching tail lamp assembly to the aperture panel (Fig. 35).

(2) Slide the lamp assembly down in the sheet metal opening.

(3) Remove the lamp assembly from vehicle.

(4) Remove bulb socket(s) from tail lamp housing.

(5) Pull bulb(s) from socket(s).

INSTALLATION

(1) Push bulb(s) into the bulb socket(s).

(2) Install bulb socket(s) into tail lamp assembly. Rotate the socket clockwise until fully seated.

(3) Test operation of lamps.

(4) Align the tail lamp assembly to the sheet metal opening.

(5) Insert the lower positioning tab into the slot and then rotate the lamp forward until the retaining clips snap into position.

(6) Slide the lamp assembly upwards within the opening.

TAIL LAMP (Continued)

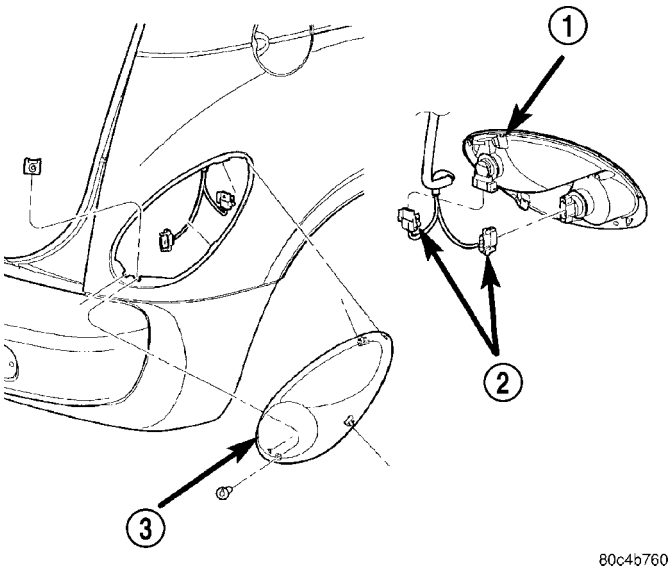

Fig. 35 TAIL AND STOP LAMPS

1 - TAIL LAMP HOUSING
2 - WIRE CONNECTORS
3 - BOTTOM LOCATOR

(7) Install tail lamp attaching screw.

TAIL LAMP UNIT

REMOVAL

(1) Remove screw attaching tail lamp assembly to the aperture panel (Fig. 35).

(2) Slide the lamp assembly downward in the sheet metal opening.

(3) Remove the lamp assembly from the vehicle.

(4) Remove the bulb sockets from the lamp assembly by rotating the sockets counter-clockwise until free of the assembly.

INSTALLATION

(1) Install the bulb sockets to the lamp assembly by rotating the sockets clockwise until fully seated.

(2) Test operation of lamps.

(3) Align the tail lamp assembly to the sheet metal opening.

(4) Insert the lower positioning tab on the lamp assembly into the matching slot and rotate the lamp forward until the retaining clips snap into position.

(5) Slide the assembly upwards within the sheet metal opening.

(6) Install the screw to hold tail lamp assembly to the aperture panel.

LAMPS/LIGHTING - INTERIOR

TABLE OF CONTENTS

page

LAMPS/LIGHTING - INTERIOR
SPECIFICATIONS
INTERIOR LAMPS 28
CENTER CONSOLE FLOOD LAMP
REMOVAL 29
INSTALLATION 29
CENTER CONSOLE FLOOD LAMP HOUSING
REMOVAL 29
INSTALLATION 29
COURTESY/READING LAMP
REMOVAL 30
INSTALLATION 30
DOME LAMP
REMOVAL 30
INSTALLATION 30
DOME LAMP UNIT
REMOVAL 30
INSTALLATION 30
DOME LAMP WITH INTRUSION SENSOR - EXPORT
REMOVAL 30
INSTALLATION 30
DOME LAMP UNIT WITH INTRUSION SENSOR - EXPORT
REMOVAL 30
INSTALLATION 31
CLUSTER ILLUMINATION LAMPS
REMOVAL 31
INSTALLATION 32
REAR CARGO LAMP
REMOVAL 32
INSTALLATION 32
REAR CARGO LAMP UNIT
REMOVAL 32
INSTALLATION 32
TRANS RANGE INDICATOR ILLUMINATION
REMOVAL 33
INSTALLATION 33
VANITY LAMP
REMOVAL 33
INSTALLATION 33

LAMPS/LIGHTING - INTERIOR

SPECIFICATIONS

INTERIOR LAMPS

CAUTION: Do not use bulbs that have a higher candle power than the bulb listed in the chart below. Damage to the lamp unit can result.

BULB APPLICATION TABLE

BULB	LAMP	CANDLE POWER
ABS INDICATOR	LED	
AIRBAG INDICATOR	LED	
BRAKE SYSTEM WARNING INDICATOR	LED	
CLIMATE CONTROLS	6233137	0.95
CONSOLE FLOOD LAMP	T37	0.5
CONSOLE TRANSMISSION RANGE INDICATOR (PRNDL)	T194	2.0
DOME LAMP	T579	9.0
DOME LAMP WITH INTRUSION SENSOR - EXPORT	T578	9.0
FRONT FOG LAMP INDICATOR	LED	
HIGH BEAM INDICATOR	PC74	0.7
INSTRUMENT CLUSTER ILLUMINATION	PC74	0.7
LOW FUEL INDICATOR	LED	
LOW OIL PRESSURE INDICATOR	LED	

LAMPS/LIGHTING - INTERIOR (Continued)

BULB	LAMP	CANDLE POWER
MALFUNCTION INDICATOR LIGHT	LED	
MAP/READING LAMP	T1037	4.4
REAR CARGO LAMP	T904	4.0
SEAT BELT INDICATOR	LED	
SECURITY ALARM INDICATOR	LED	
TRAC OFF INDICATOR	LED	
TURN SIGNAL INDICATOR	T74	0.7
VISOR VANITY	6501966	4.4
VOLTAGE INDICATOR	LED	

All the interior bulbs utilize a brass or glass wedge base. Bulbs with aluminum bases are not approved and should not be used.

CENTER CONSOLE FLOOD LAMP

REMOVAL

(1) Open hood.
(2) Disconnect and isolate the battery negative cable.
(3) Insert a small screwdriver into notch by clip (Fig. 1)and gently pry out unit.
(4) Slide back rear cover to expose bulb.
(5) Replace bulb.

INSTALLATION

(1) Insert new bulb.
(2) Gently secure bulb back into slot.

NOTE: When installing the retainer, ensure that the forward tabs are inserted properly into the slots in the instrument panel.

(3) Connect the battery negative cable.
(4) Close hood.
(5) Verify vehicle and system operation.

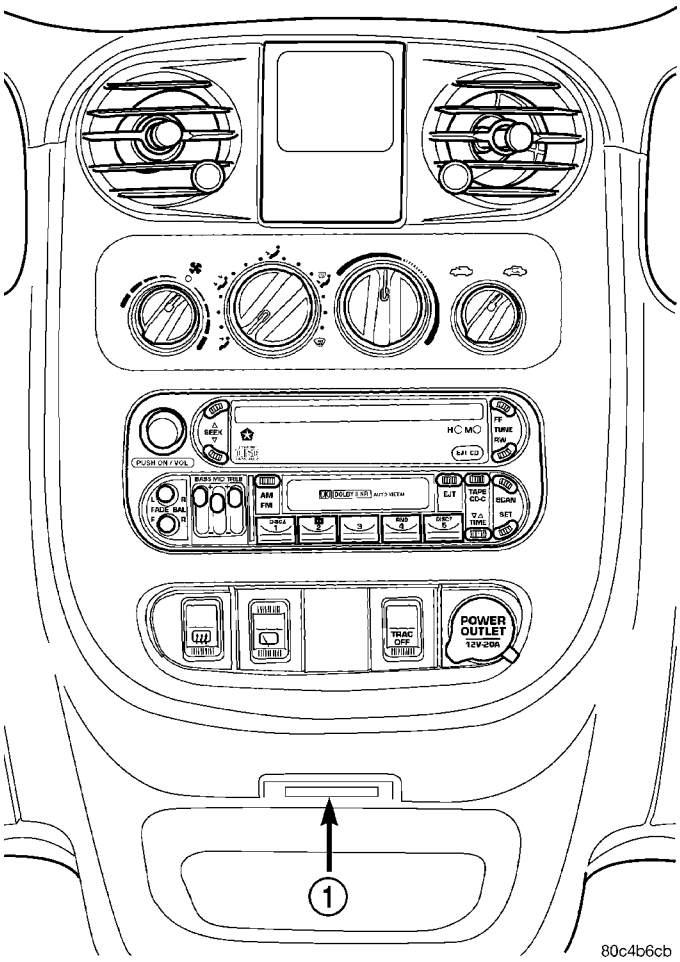

Fig. 1 CENTER CONSOLE FLOOD LAMP LOCATION

1 - CENTER CONSOLE FLOOD LAMP

CENTER CONSOLE FLOOD LAMP HOUSING

REMOVAL

(1) Using a flat blade tool, remove console flood lamp from the lower center console (Fig. 2).
(2) Disconnect wire connector.
(3) Remove console flood lamp housing.

INSTALLATION

(1) Place console flood lamp housing near opening and connect the wire connector (Fig. 2).
(2) Test lamp.
(3) Place console flood lamp into position and apply hand pressure to snap lamp into position.

CENTER CONSOLE FLOOD LAMP HOUSING (Continued)

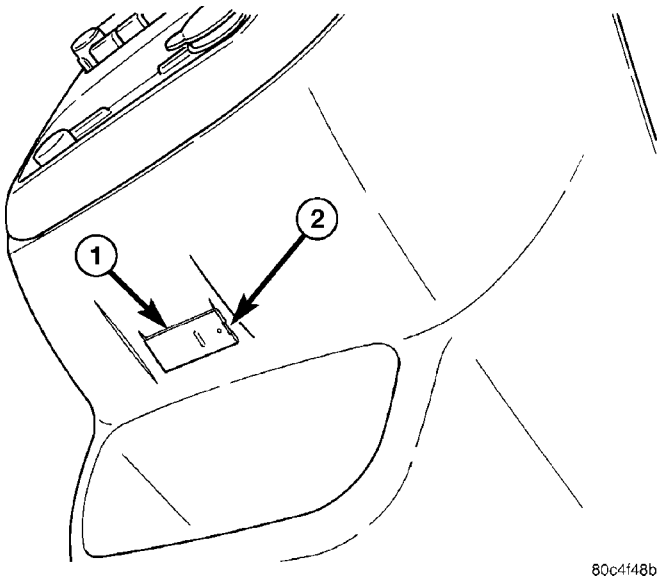

Fig. 2 LOWER INSTRUMENT PANEL CENTER STACK

1 - CONSOLE FLOOD LAMP
2 - INSERT SMALL FLAT TOOL

COURTESY/READING LAMP

REMOVAL

(1) Insert a trim stick between the lamp bezel and courtesy/readinglamp lens.
(2) Carefully swing down one side the lamp lens.
(3) Remove bulb from lamp socket.

INSTALLATION

(1) Push bulb in socket and snap into place.
(2) Position lens on lamp and snap into place.

DOME LAMP

REMOVAL

(1) Insert a trim stick between the lamp unit and the lens.
(2) Carefully swing down one side the lamp lens.
(3) Remove lamp from lamp unit socket.

INSTALLATION

(1) Push lamp in socket and snap into place.
(2) Position lens on lamp unit and snap into place.

DOME LAMP UNIT

REMOVAL

(1) Insert a trim stick between the dome lamp unit bezel and the headliner.
(2) Disconnect wire connector.
(3) Remove the dome lamp unit from vehicle.

INSTALLATION

(1) Place lamp into position.
(2) Connect electrical connector.
(3) Install dome lamp unit into headliner by firmly pushing upward.

DOME LAMP WITH INTRUSION SENSOR - EXPORT

REMOVAL

(1) Using suitable pry tool, gently pry open dome lamp unit lens (Fig. 3).
(2) Remove dome lamp bulb from dome lamp.

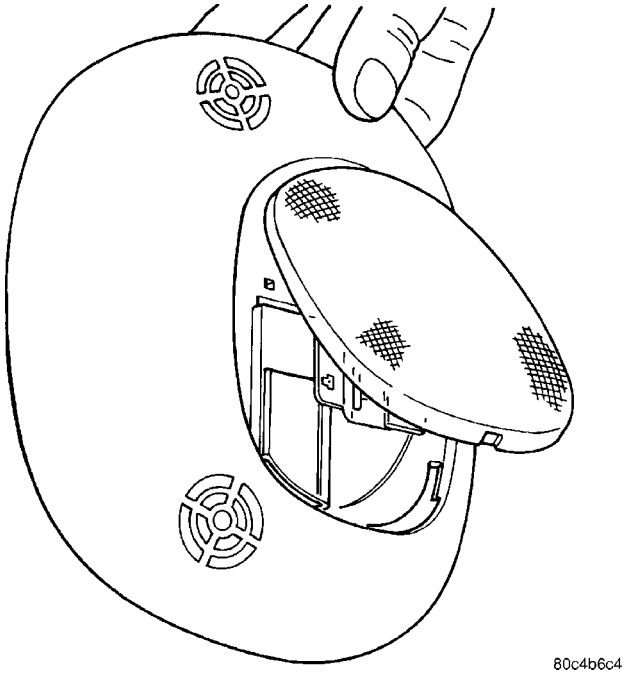

Fig. 3 ACCESSING DOME LAMP

INSTALLATION

(1) Install dome lamp.
(2) Close dome lamp unit lens (Fig. 3).

DOME LAMP UNIT WITH INTRUSION SENSOR - EXPORT

REMOVAL

(1) Disconnect and isolate the negative battery cable.
(2) Grasp the dome lamp unit with intrusion sensor and rotate counterclockwise (Fig. 4).

DOME LAMP UNIT WITH INTRUSION SENSOR - EXPORT (Continued)

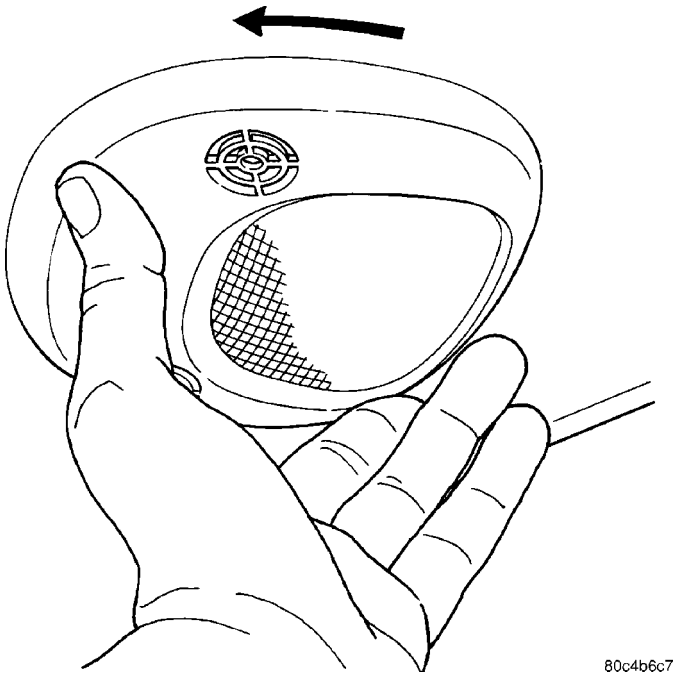

Fig. 4 DOME LAMP UNIT WITH INTRUSION SENSOR REMOVAL

(3) Pull straight down on dome lamp unit with intrusion sensor.

(4) Disconnect electrical connector.

(5) Remove the dome lamp unit with intrusion sensor from the vehicle.

INSTALLATION

(1) Connect electrical connector.

(2) Orient the dome lamp unit with intrusion sensor in a way that the tabs align with the slots in the headliner (Fig. 5).

(3) Push the dome lamp unit with intrusion sensor straight up.

(4) Rotate the dome lamp unit with intrusion sensor clockwise.

(5) Connect the battery negative cable.

CLUSTER ILLUMINATION LAMPS

REMOVAL

The instrument cluster turn signals (Fig. 7), (Fig. 6) and the high beam indicator (Fig. 8) are serviceable indicators. The instrument cluster must first be removed to replace the high beam indicator (Refer to 8 - ELECTRICAL/INSTRUMENT CLUSTER - REMOVAL). Then the defective bulb and socket turns out counterclockwise. The instrument cluster bezel needs to be removed to access the turn signal indicators (Refer to 23 - BODY/INSTRUMENT PANEL/CLUSTER BEZEL - REMOVAL). If any of the

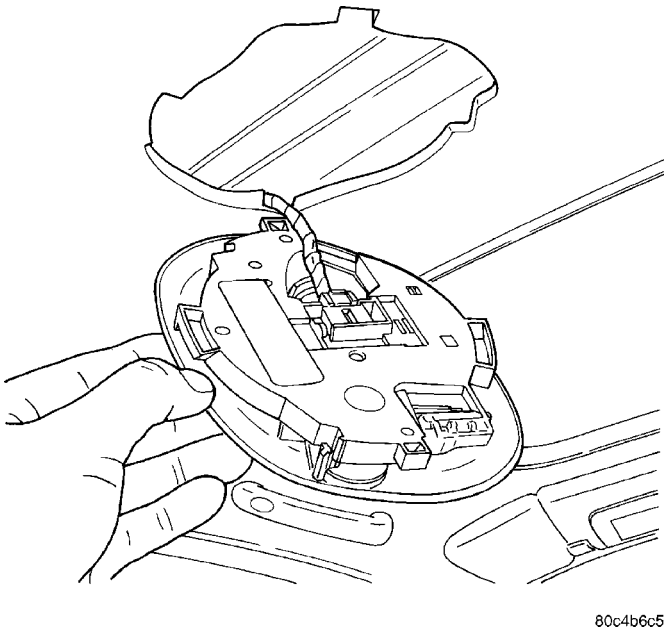

Fig. 5 DOME LAMP UNIT WITH INTRUSION SENSOR ORIENTATION TO HEADLINER

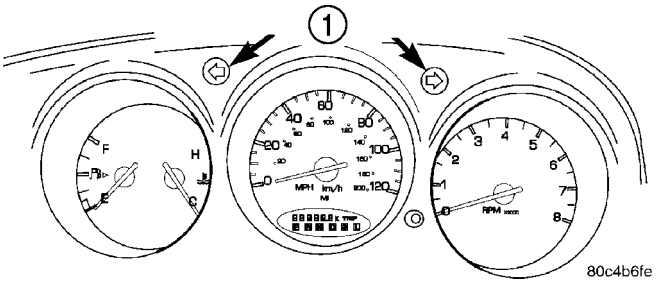

Fig. 6 TURN SIGNAL INDICATOR LAMPS

1 - TURN SIGNAL INDICATORS

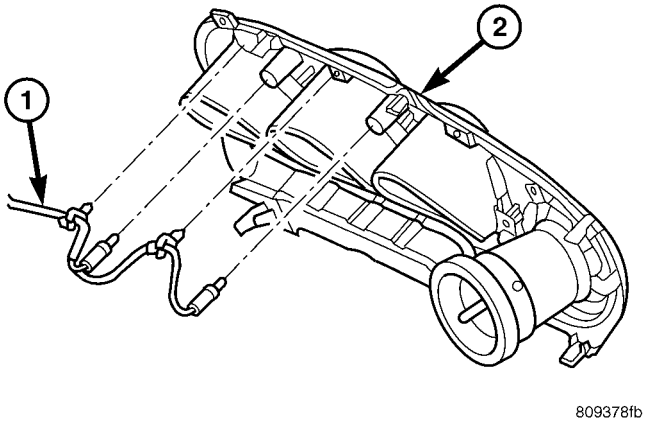

Fig. 7 TURN SIGNAL LAMP(S) - REMOVE/INSTALL

1 -CLUSTER BEZEL
2 - TURN SIGNAL LAMPS AND WIRE HARNESS

CLUSTER ILLUMINATION LAMPS (Continued)

other indicators are burned out, the entire cluster must be replaced.

The cluster illumination bulbs are serviceable and may be replaced once the instrument cluster is removed (Refer to 8 - ELECTRICAL/INSTRUMENT CLUSTER - REMOVAL).

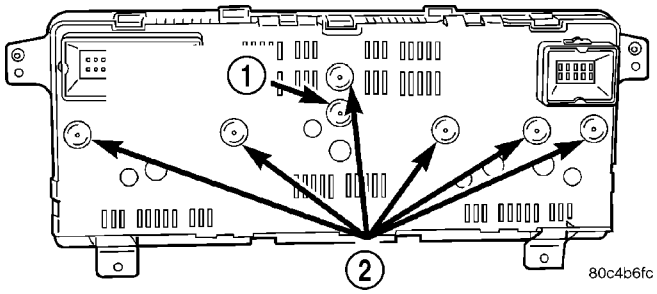

Fig. 8 INSTRUMENT CLUSTER ILLUMINATION BULBS

1 - HIGH BEAM INDICATOR
2 - ILLUMINATION BULBS

INSTALLATION

The illumination bulbs (Fig. 8) are serviceable. The bulb and socket turn in clockwise. Then the instrument cluster may be installed (Refer to 8 - ELECTRICAL/INSTRUMENT CLUSTER - INSTALLATION).

After servicing the indicator (high beam only), install the instrument cluster (Refer to 8 - ELECTRICAL/INSTRUMENT CLUSTER - INSTALLATION).

After replacing the turn signal bulb(s) (Fig. 7), install the (Refer to 23 - BODY/INSTRUMENT PANEL/CLUSTER BEZEL - INSTALLATION).

REAR CARGO LAMP

REMOVAL

(1) Open liftgate.

(2) Remove jack storage door from right rear quarter trim panel.

(3) Remove jack and tool bag.

(4) Place right hand on stem of cargo lamp unit and pull downward until lens separates from the lamp unit (Fig. 9).

(5) Pull cargo lamp unit through jack storage door opening to access bulb.

(6) Disconnect wire connector from cargo lamp unit.

(7) Pull bulb from unit socket.

INSTALLATION

(1) Push bulb into unit socket (Fig. 9).

(2) Snap lens onto lamp unit.

(3) Move wire connector through lamp opening and connect wire connector to cargo lamp unit.

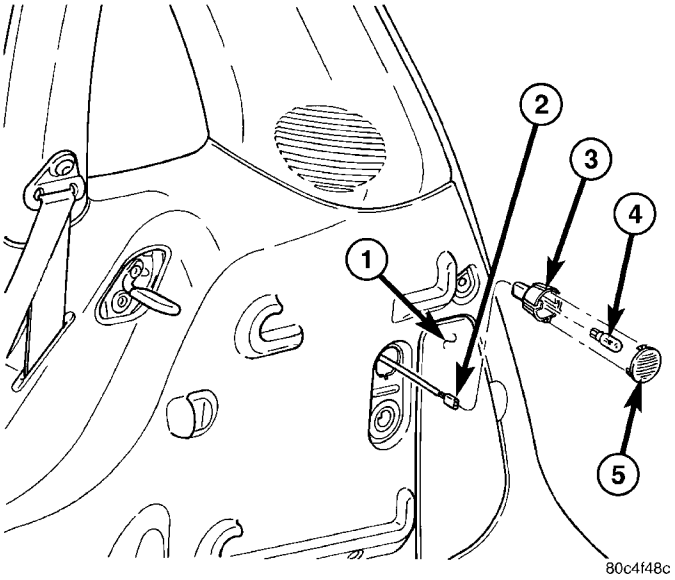

Fig. 9 REAR CARGO LAMP

1 - JACK STORAGE AREA
2 - WIRE CONNECTOR
3 - CARGO LAMP UNIT
4 - BULB
5 - LENS

(4) Place cargo lamp unit into opening and apply hand pressure to seat lamp unit into rear quarter panel.

(5) Install jack and tool bag in the storage area.

(6) Install jack storage door to the right rear quarter trim panel.

(7) Close liftgate.

REAR CARGO LAMP UNIT

REMOVAL

(1) Open liftgate.

(2) Remove jack storage door from right rear quarter trim panel.

(3) Remove jack and tool bag.

(4) Place right hand on stem of cargo lamp unit and pull downward until lens separates from the cargo lamp unit (Fig. 9).

(5) Pull cargo lamp unit through jack storage door opening to access bulb.

(6) Disconnect wire connector from cargo lamp unit.

(7) Remove cargo lamp unit from vehicle.

INSTALLATION

(1) Snap lens onto lamp unit (Fig. 9).

(2) Move wire connector through lamp opening and connect wire connector to cargo lamp unit.

REAR CARGO LAMP UNIT (Continued)

(3) Place cargo lamp unit into opening and apply hand pressure to seat lamp unit into rear quarter panel.
(4) Install jack and tool bag in the storage area.
(5) Install jack storage door to the right rear quarter trim panel.
(6) Close liftgate.

TRANS RANGE INDICATOR ILLUMINATION

REMOVAL

(1) Remove gear shift knob.
(2) Remove floor console.
(3) Disconnect socket from transaxle range indicator (Fig. 10).
(4) Remove bulb from socket.

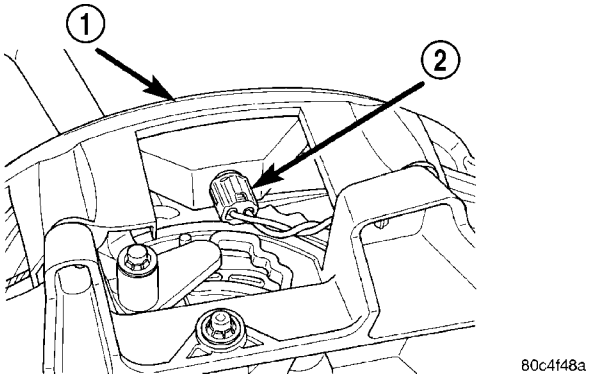

Fig. 10 TRANSMISSION RANGE INDICATOR

1 - TRANSMISSION RANGE INDICATOR
2 - TRANSMISSION RANGE INDICATOR LAMP BULB AND SOCKET

INSTALLATION

(1) Push bulb into socket (Fig. 10).
(2) Snap socket into position.
(3) Install floor console into position.
(4) Install gear shift knob.

VANITY LAMP

REMOVAL

(1) Lower visor.
(2) Insert a small flat bladed tool into the slot between the lamp lens and lamp.
(3) Carefully pry lens outward.
(4) Remove bulb from socket.

INSTALLATION

(1) Position bulb in socket and push into place.
(2) Position lens on lamp and snap into place.

MESSAGE SYSTEMS

TABLE OF CONTENTS

page

OVERHEAD CONSOLE
DESCRIPTION 1
OPERATION 1
STANDARD PROCEDURE
STANDARD PROCEDURE - COMPASS CALIBRATION 2
STANDARD PROCEDURE - COMPASS VARIATION ADJUSTMENT 3
STANDARD PROCEDURE - COMPASS DEMAGNETIZING 4
REMOVAL 4
INSTALLATION 5
SPECIAL TOOLS
OVERHEAD CONSOLE 5
AMBIENT TEMP SENSOR
DESCRIPTION 5
OPERATION 5
DIAGNOSIS AND TESTING - AMBIENT TEMPERATURE SENSOR 5
REMOVAL 6
INSTALLATION 6

OVERHEAD CONSOLE

DESCRIPTION

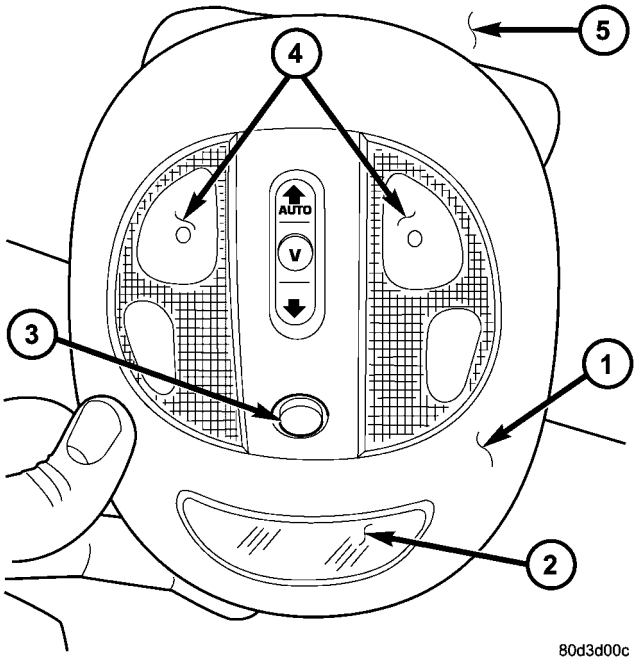

Fig. 1 PT Overhead Console

1 - OVERHEAD CONSOLE HOUSING
2 - DISPLAY SCREEN
3 - DISPLAY STEP BUTTON
4 - READING/COURTESY LAMPS
5 - HEADLINER

The overhead console includes the Compass/Temperature read-out and two reading and courtesy lamps. This display provides the outside temperature and one of eight compass readings to indicate the direction the vehicle is facing. The outside temperature is monitored by the ambient temperature sensor mounted on the support brace in front of the A/C condenser, behind the front grille. The ambient temperature is hardwired directly to the overhead console. On vehicles equipped with a power sunroof option, the overhead console also houses the power sunroof switch between the two reading and courtesy lamps (Fig. 1). The overhead console is snapped into place near the front of the vehicle's roof and clips on the headliner, at the rear of the overhead console. There is a STEP button for the compass/temperature read-out located forward of the sunroof switch (if equipped), and between the map/reading/courtesy lamps.

The overhead console is equipped with two individual reading and courtesy lamps. The lamp lenses are the only visible components of these lamps. The reading and courtesy lamp lenses are mounted near the rear of the overhead console housing. Each lamp has its own switch, bulb, reflector and lens; but both lamps share a common lamp housing within the overhead console. Each lamp is designed and aimed to provide illumination that will be directed only to that side of the vehicle on which the lamp is located.

The reading and courtesy lamp lenses and the lamp housing unit are serviced only as a unit with the overhead console housing. If either of the lamp lenses or the lamp housing is faulty or damaged, the overhead console housing unit must be replaced.

OPERATION

There is a STEP button to display the compass/temperature, and can be read in either F° or C°. When the vehicle is first turned ON, you may select to have the overhead console:

- Blank display
- Compass/Temperature displayed in Fahrenheit

OVERHEAD CONSOLE (Continued)

- Compass/Temperature displayed in Celsius

To put the compass/temperature in the F° display, press the STEP button once. To put the compass/temperature in the C° display, press the STEP button twice. A third press of the STEP button will return it to the blank display.

The overhead console reading and courtesy lamps operate on battery current that is provided at all times, regardless of the ignition switch position. The ground feed for the lamps is switched through the integral reading and courtesy lamp switches or through the door jamb switches.

All reading and courtesy lamps located in the overhead console are activated by the door jamb switches. When all of the doors are closed, these lamps can be individually activated by depressing the corresponding lens. When any door is open, depressing the lamp lenses to activate the lamp switches will not turn the lamps off.

Each light is turned ON by pressing the lens. Press the lens a second time to turn the light OFF. The lights also come ON when a door is opened or the dimmer switch is turned fully upward, past the second detent.

NOTE: The lights will remain ON until the switch is pressed a second time, so be sure they have been turned OFF before leaving the vehicle. They will not turn OFF automatically.

AUTOMATIC COMPASS CALIBRATION

The self calibrating feature of the compass eliminates the need to calibrate the compass for normal conditions. After approximately 10 ignition cycles the CAL light will turn ON. The CAL symbol may also appear after the vehicle is subjected to a high level of magnetism. After completing three 360° (degree) circles in an area free from large metal or metallic objects, the CAL symbol will turn off and the compass will function normally.

MANUAL COMPASS CALIBRATION

If the compass appears to be in the locked up position, you may calibrate the compass. Find an open area away from large metal objects. With the ignition OFF, press and hold the STEP button while turning ON the ignition. Release the STEP button and the CAL light will appear (about 10-15 seconds). Drive in 3 complete 360° (degree) circles. The CAL light will turn off and the compass will be calibrated.

ZONE VARIANCE

Compass variance, also known as magnetic declination, is the difference in angle between magnetic north and true geographic north. In some geographic locations, the difference between magnetic and geographic north is great enough to cause the compass to give false readings. For proper compass function, the correct variance zone must be set. Refer to the variance map for the correct variance zone in your area. To check the variance zone, the ignition switch must be ON and the compass/temperature displayed. Press and hold the STEP button for about 5-15 seconds until ZONE appears in the display, then release the button. The number displayed is the variance zone set in the compass. To change the zone refer to the standard procedure later in this section.

OUTSIDE TEMPERATURE

Since the ambient temperature sensor is in close proximity to the radiator, it can pick up engine heat giving a false “high” outside air temperature reading - known as “Heat Soak”. In order to display a more correct outside temperature, the overhead console will not increase the displayed temperature until it detects movement in the compass over a two-minute period, to insure that there is adequate airflow over the sensor. “Movement over a two minute period” is best understood as once in the first minute, then some more detected movement in the second minute.

If the display shows an open circuit OC (or -49° F (-45° C) then there is an OPEN CIRCUIT or a missing sensor and the condition must be corrected. Keep in mind that after a repair is made, the vehicle may need to be driven to update the temperature for the reasons described above. Even if the engine is cool, it will not increase from -49°F without detecting movement.

STANDARD PROCEDURE

STANDARD PROCEDURE - COMPASS CALIBRATION

CAUTION: Do not place any external magnets, such as magnetic roof mount antennas, in the vicinity of the compass. Do not use magnetic tools when servicing the overhead console.

The electronic compass features a self-calibrating design, which simplifies the calibration procedure. This feature automatically updates the compass calibration while the vehicle is being driven. This allows the compass unit to compensate for small changes in the residual magnetism that the vehicle may acquire during normal use. If the compass readings appear to be erratic or out of calibration, perform the following calibration procedure. Also, new service replacement compass mini-trip computer modules must have their compass calibrated using this procedure. Do not attempt to calibrate the compass near large metal objects such as other vehicles, large buildings, or

OVERHEAD CONSOLE (Continued)

bridges; or, near overhead or underground power lines.

(1) Start the engine. If the compass/temperature data is not currently being displayed, momentarily depress and release the Step push button (this unlabeled button is located directly behind the overhead console display screen) to step through the display options until you have reached the compass/temperature display.

(2) Depress the Step push button, until “ZONE” appears in the display (approx. 5-10 seconds), then “CAL” will be displayed. Release the Step button when CAL is displayed. The “CAL” in the display indicates that the compass is in the calibration mode.

(3) Drive the vehicle on a level surface, at least fifty feet away from large metal objects and power lines, in all four compass directions, such as driving around a city block several times or driving in two to three complete circles at a slow speed (approx. 5 mph) until the CAL is no longer displayed.

(4) Finally, set the proper zone/variance for the area you are in, when in manual override mode for calibration, it defaults to zone 8.

NOTE: If the “CAL” message remains in the display, either there is excessive magnetism near the compass, or the unit is faulty. Repeat the calibration procedure at least one more time.

NOTE: If the wrong direction is still indicated in the compass display, the area selected for calibration may be too close to a strong magnetic field. Repeat the calibration procedure in another location.

STANDARD PROCEDURE - COMPASS VARIATION ADJUSTMENT

Compass variance, also known as magnetic declination, is the difference in angle between magnetic north and true geographic north. In some geographic locations, the difference between magnetic and geographic north is great enough to cause the compass to give false readings.

If a customer moves, or drives across zones the compass variation will have to be reprogrammed so that the compass will display the correct readings. If problems like these occur, the compass variance must be set. Use the following procedure to program the compass zone variation.

PROGRAMMING ZONE VARIATION

(1) Using the Variance Zone map, find your geographic location and note the zone number (Fig. 2).

(2) Turn the ignition switch to the On position. If the compass/temperature data is not currently being displayed, momentarily depress and release the Step push button to step through the display options until you have reached the compass/temperature display.

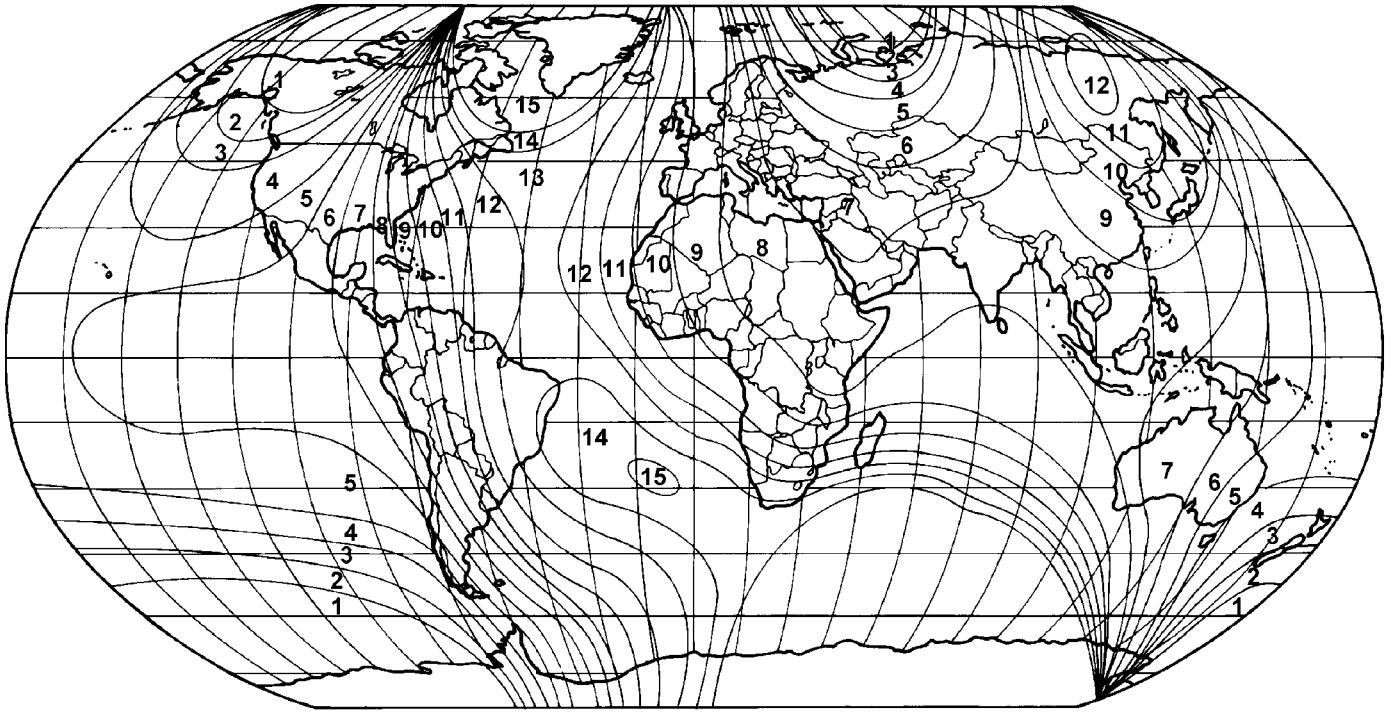

Fig. 2 Variance Zones

OVERHEAD CONSOLE (Continued)

(3) Depress the Step push button and hold down until the compass mini-trip computer enters the variation adjustment mode and "VAR" along with the current variance zone will appear in the display.

(4) Momentarily depress and release the Step push button to step through the zone numbers, until the zone number for your geographic location appears in the display.

(5) After five seconds, the displayed zone will automatically be set in the compass mini-trip computer module memory and normal operation will resume.

(6) Confirm that the correct directions are now indicated by the compass.

STANDARD PROCEDURE - COMPASS DEMAGNETIZING

A degaussing tool (Special Tool 6029) is used to demagnetize, or degauss, the overhead console forward mounting screw and the roof panel above the overhead console. Equivalent units must be rated as continuous duty for 110/115 volts and 60 Hz. They must also have a field strength of over 350 gauss at 7 millimeters (0.25 inch) beyond the tip of the probe.

To demagnetize the roof panel and the overhead console forward mounting screw, proceed as follows:

(1) Be certain that the ignition switch is in the Off position, before you begin the demagnetizing procedure.

(2) Connect the degaussing tool (Fig. 3)to an electrical outlet, while keeping the tool at least 61 centimeters (2 feet) away from the compass unit.

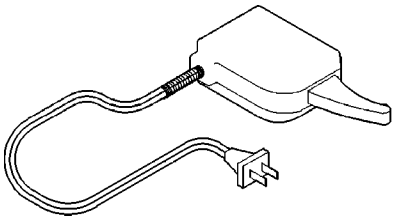

Fig. 3 Degaussing Tool 6029

(3) Slowly approach the head of the overhead console forward mounting screw with the degaussing tool connected.

(4) Contact the head of the screw with the plastic coated tip of the degaussing tool for about two seconds.

(5) With the degaussing tool still energized, slowly back it away from the screw. When the tip of the tool is at least 61 centimeters (2 feet) from the screw head, disconnect the tool.

(6) Place a piece of paper approximately 22 by 28 centimeters (8.5 by 11 inches), oriented on the vehicle lengthwise from front to rear, on the center line of the roof at the windshield header (Fig. 4). The purpose of the paper is to protect the roof panel from scratches, and to define the area to be demagnetized.

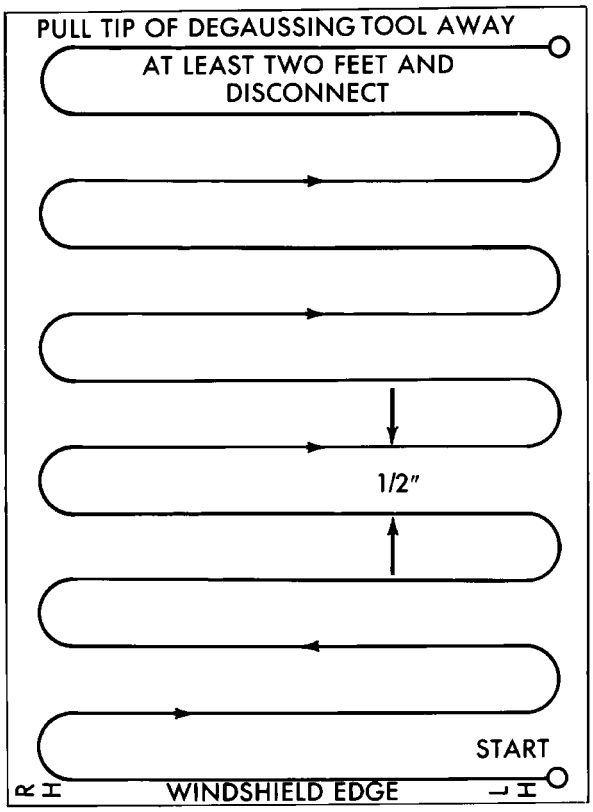

Fig. 4 Roof Demagnetizing Pattern

(7) Connect the degaussing tool to an electrical outlet, while keeping the tool at least 61 centimeters (2 feet) away from the compass unit.

(8) Slowly approach the center line of the roof panel at the windshield header, with the degaussing tool connected.

(9) Contact the roof panel with the plastic coated tip of the degaussing tool. Be sure that the template is in place to avoid scratching the roof panel. Using a slow, back-and-forth sweeping motion, and allowing 13 millimeters (0.50 inch) between passes, move the tool at least 11 centimeters (4 inches) to each side of the roof center line, and 28 centimeters (11 inches) back from the windshield header.

(10) With the degaussing tool still energized, slowly back it away from the roof panel. When the tip of the tool is at least 61 centimeters (2 feet) from the roof panel, disconnect the tool.

(11) Calibrate the compass and adjust the compass variance. Refer to **Compass Variation Adjustment** and **Compass Calibration** in this section for the procedures.

REMOVAL

(1) Disconnect and isolate the negative battery cable.

OVERHEAD CONSOLE (Continued)

(2) Grasp the front of the overhead console and pull downward to disconnect the front retaining clips.

(3) Slide the overhead console forward to disengage the rear tabs from the headliner.

(4) Disconnect the overhead console wire connector.

(5) Unsnap compass module from inner roof panel. Push module all the way forward to disengage the front retaining clip. Once the front clip is disconnected, push the module all the way rearward to disengage the rear retaining clip.

(6) Remove console from vehicle.

INSTALLATION

(1) Position overhead console into vehicle and snap compass module onto inner roof panel.

(2) Connect overhead console wire harness connector.

(3) Engage the rear tabs on the overhead console into the headliner.

(4) Align the front retaining clips of the overhead console with the corresponding holes in the inner roof panel and firmly snap into place.

(5) Connect the battery negative cable.

(6) Calibrate compass (Refer to 8 - ELECTRICAL/ OVERHEAD CONSOLE - STANDARD PROCEDURE).

SPECIAL TOOLS

OVERHEAD CONSOLE

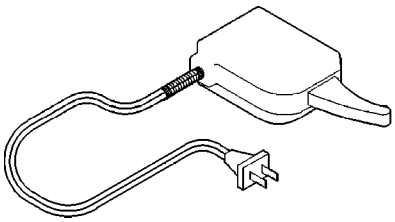

Degaussing Tool 6029

AMBIENT TEMP SENSOR

DESCRIPTION

Ambient air temperature is monitored by the compass/temperature display unit. It receives a hard wired input from the ambient temperature sensor. The ambient temperature sensor is a variable resistor mounted to a bracket that is secured with a nut to the bracket in front of the A/C condenser, behind the radiator grille.

The ambient temperature sensor cannot be adjusted or repaired and, if faulty or damaged, it must be replaced.

OPERATION

The ambient temperature sensor is a variable resistor that operates on a five-volt reference signal. The resistance in the sensor changes as temperature changes, changing the temperature sensor signal circuit voltage to compass/temperature display unit. Based upon the resistance in the sensor, the compass/temperature display unit senses a specific voltage on the temperature sensor signal circuit, which it is programmed to correspond to a specific temperature. The compass/temperature display unit then displays the proper ambient temperature.

DIAGNOSIS AND TESTING - AMBIENT TEMPERATURE SENSOR

The thermometer function is supported by the ambient temperature sensor, a wiring circuit, and the compass/temperature display unit.

If the display shows OC (-49° F (-45° C) or SC (140° F (60° C),, there is an OPEN or SHORT CIRCUIT and it must be repaired before the VFD can be tested.

The ambient temperature sensor circuit can also be diagnosed using the following Sensor Test, and Sensor Circuit Test. If the temperature sensor and circuit are confirmed to be OK, but the temperature display is inoperative or incorrect, replace the compass/temperature display.

SENSOR TESTING

(1) Turn the ignition switch to the OFF position. Disconnect and isolate the battery negative cable (Fig. 5). Disconnect the ambient temperature sensor wire harness connector.

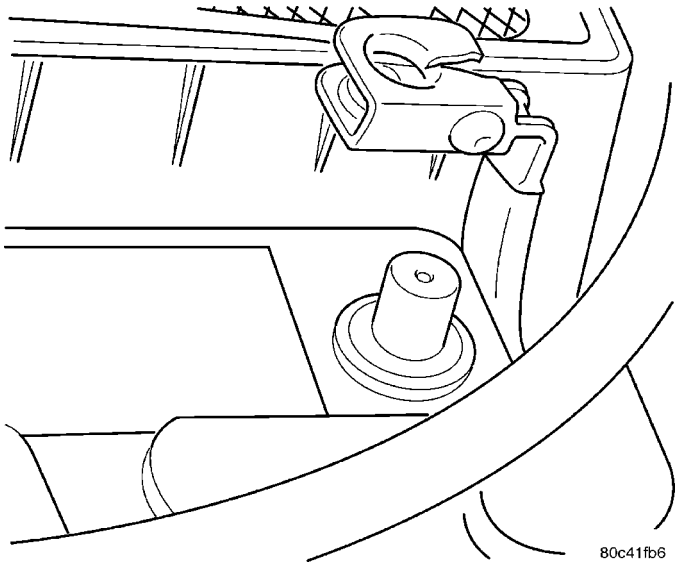

Fig. 5 Battery Negative Cable Remove/Install

(2) Measure the resistance of the ambient temperature sensor. At room temperature (approx. 68°F),

AMBIENT TEMP SENSOR (Continued)

the sensor resistance should be between 9-11 Kilohms (9000-11000 ohms). The sensor resistance should read between these two values. If OK, refer to Sensor Circuit Testing below. If not OK, replace the faulty ambient temperature sensor.

SENSOR CIRCUIT TESTING

(1) Turn the ignition switch to the OFF position. Disconnect and isolate the battery negative cable. Disconnect the ambient temperature sensor wire harness connector and the compass/temperature display unit wire harness connector.

(2) Connect a jumper wire between the two terminals in the body half of the ambient temperature sensor wire harness connector.

(3) Check for continuity between the sensor return circuit and the ambient temperature sensor signal circuit cavities of the compass/temperature display unit wire harness connector. There should be continuity. If OK, go to Step 4. If not OK, repair the open sensor return circuit or ambient temperature sensor signal circuit to the ambient temperature sensor as required.

(4) Remove the jumper wire from the body half of the ambient temperature sensor wire harness connector. Check for continuity between the sensor return circuit cavity of the compass/temperature display unit wire harness connector and a good ground. There should be no continuity. If OK, go to Step 5. If not OK, repair the shorted sensor return circuit as required.

(5) Check for continuity between the ambient temperature sensor signal circuit cavity of the compass/temperature display unit wire harness connector and a good ground. There should be no continuity. If OK, replace the compass/temperature display unit. If not OK, repair the shorted ambient temperature sensor signal circuit as required.

REMOVAL

(1) Open hood.

(2) Working through the hole in the top center of the grille, remove the one retaining nut from the appropriate ambient temperature sensor (Fig. 6).

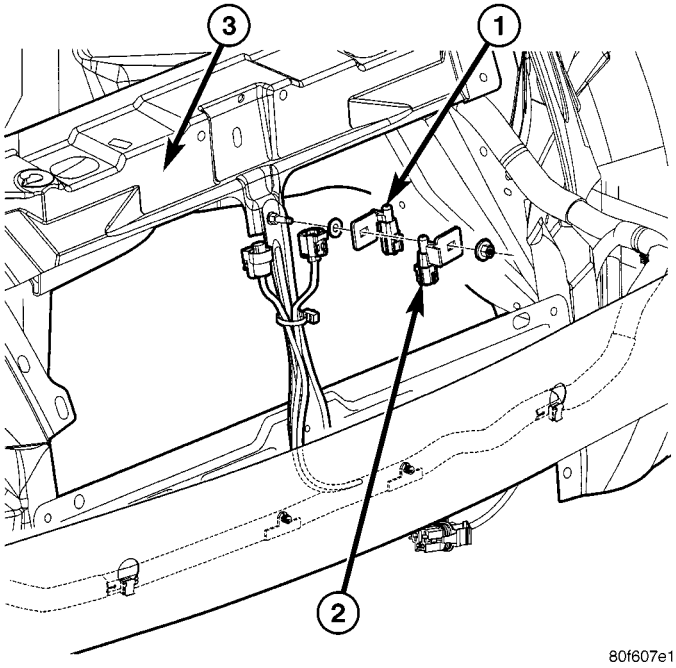

Fig. 6 AMBIENT AIR TEMPERATURE SENSOR LOCATION

1 - Air Temperature Sensor - NGC Engine Controller
2 - Air Temperature Sensor - Overhead Console
3 - Radiator Closure Panel

(3) Disconnect the ambient air temperature sensor electrical connector and remove the sensor from the vehicle.

INSTALLATION

(1) Install the one retaining nut to ambient temperature sensor.

(2) Connect the battery negative cable.

(3) Close hood.

POWER SYSTEMS

TABLE OF CONTENTS

page

POWER LOCKS 1
POWER MIRRORS 8
POWER SEAT SYSTEM 12
POWER WINDOWS 17

POWER LOCKS

TABLE OF CONTENTS

page

POWER LOCKS
DESCRIPTION 1
OPERATION 2
DIAGNOSIS AND TESTING - POWER LOCKS . . 3
STANDARD PROCEDURE
STANDARD PROCEDURE - DOUBLE ACTIVATION UNLOCK 3
STANDARD PROCEDURE - ROLLING DOOR LOCKS 3
DOOR LOCK SWITCH
DIAGNOSIS AND TESTING - DOOR LOCK SWITCH 3
REMOVAL 4
INSTALLATION 4
DOOR LOCK MOTOR
DESCRIPTION 4
OPERATION 4
DIAGNOSIS AND TESTING - DOOR LOCK MOTOR 4
LIFTGATE LOCK MOTOR
REMOVAL 5
INSTALLATION 5
REMOTE KEYLESS ENTRY MODULE
DIAGNOSIS AND TESTING - REMOTE KEYLESS ENTRY MODULE 5
REMOVAL 5
INSTALLATION 5
REMOTE KEYLESS ENTRY TRANSMITTER
DESCRIPTION 6
OPERATION 6
DIAGNOSIS AND TESTING - REMOTE KEYLESS ENTRY TRANSMITTER 6
STANDARD PROCEDURE
STANDARD PROCEDURE - HORN CHIRP TOGGLE 6
STANDARD PROCEDURE - TRANSMITTER PROGRAMING 7
STANDARD PROCEDURE - RKE TRANSMITTER BATTERIES 7
SPECIFICATIONS - TRANSMITTER RANGE 7

POWER LOCKS

DESCRIPTION

POWER LOCKS

A power operated door and liftgate lock system is available factory-installed equipment on this model. The power lock system allows all of the doors and the liftgate to be locked or unlocked electrically by operating a switch on either front door trim panel. The power lock system receives non-switched battery current through a fuse in the Fuse Block, so that the power locks remain operational, regardless of the ignition switch position.

This vehicle also offers several customer programmable features, which allows the selection of several optional electronic features to suit individual preferences.

The power lock system for this vehicle can also be operated remotely using the available Remote Keyless Entry (RKE) system radio frequency transmitters, if equipped.

Certain functions and features of the power lock system rely upon resources shared with other electronic modules in the vehicle over the Programmable Communications Interface (PCI) data bus network.

POWER LOCKS (Continued)

For proper diagnosis of these electronic modules or of the PCI data bus network, the use of a DRBIII® scan tool and the appropriate diagnostic information are required.

CHILD PROTECTION LOCKS

To provide a safer environment for children riding in the rear seat, the rear doors have the "child protection" door lock system.

The child protection locks are on the rear doors only. The lock, when engaged, will disable the inside door handle from opening the door. The lock is part of the latch/lock assembly.

DOOR LOCK INHIBIT

With the key in the ignition switch and the driver door open, the Remote Keyless Entry (RKE) module will ignore the command to lock the power door locks using the interior door lock switches. Once the key is removed, or the drivers door is closed, the RKE module will allow the power locks to lock using the door lock switch.

REMOTE KEYLESS ENTRY

The remote keyless entry system allows locking and unlocking of the vehicle door(s) liftgate, panic alarm and arming or disarming of the vehicle theft security system (if equipped), using the hand held radio frequency (RF) transmitter.

The receiver may receive signals from up to four transmitters. Each transmitter has its own code, and the code is programmed and stored into RKE module memory. If a transmitter is replaced or additional transmitters are added, the codes for all units have to be reprogrammed into the RKE module memory. If a receiver module is replaced, the transmitter codes must be stored in the new receiver memory (by performing the steps for programming transmitters). The RKE module is capable of retaining all transmitter codes when power is removed from the module.

OPERATION

POWER LOCKS

All doors can be locked or unlocked mechanically and independently with their respective locking knobs. The front doors can also be unlocked by actuation of the inside remote door handle.

CENTRAL LOCKING/UNLOCKING (IF EQUIPPED)

The door locks can be locked or unlocked electrically via the exterior door key cylinders to provide the central locking/unlocking feature. The central locking/unlocking feature incorporates a customer programmable "Double activation unlock" feature which operates in the following manner: When enabled, the first turn of the key cylinder to the UNLOCK position (toward the front of the vehicle) will mechanically unlock the door whose key cylinder is being turned. A second turn of the key cylinder to the UNLOCK position (within five seconds of the first turn) will cause all vehicle doors and liftgate to unlock electrically. When this feature is disabled, all vehicle doors and liftgate will be unlocked electrically upon the first turn of a key cylinder to the UNLOCK position. The vehicle is locked electrically by turning the key cylinder to the LOCK position once, regardless of the state of the double activation unlock feature.

REMOTE KEYLESS ENTRY

The transmitter has three buttons for operation: LOCK, UNLOCK and PANIC.

- Pressing the UNLOCK button will unlock the driver's door, flash the park lamps twice and enable illuminated entry. Pressing and releasing the button once will unlock the drivers door. Pressing and releasing the button two tomes within a five second interval will unlock all doors.
- Pressing the LOCK button will cause the horn to sound a short chirp (if enabled) and flash the park lamps to notify that the all door lock signal was received and set. Illuminated entry is cancelled and the interior lamps are faded to off.
- Pressing the PANIC button will cause the panic alarm to sound for three minutes, until the PANIC button is pressed a second time, or the vehicle reaches a speed of 25.7 Km/h (15 mph). The receiver is capable of retaining a Vehicle Access Code (VAC) even when power is removed. Each Remote Keyless Entry (RKE) module must have at least one and no more than four transmitter.

ROLLING DOOR LOCKS

When the rolling door lock system is enabled, the RKE module will automatically lock all the vehicle doors and liftgate when all of the following conditions are met:

- All doors are closed
- The vehicle speed exceeds 25.7 Km/h (15 +/- 1 mph).
- The throttle position sensor tip-in is greater than 10 +/- 2 degrees.

The RKE module will automatically re-lock all doors if the above conditions are met and if any of the doors become ajar and then closed again.

The enabling/disabling of the rolling door lock feature is customer programmable, as well as programmable with the DRB lll® scan tool.

The power lock motors are also equipped with a thermal protection system which prevents the motors from burning out. The motors may chatter if they are continuously activated.

POWER LOCKS (Continued)

DIAGNOSIS AND TESTING - POWER LOCKS

The most reliable, efficient, and accurate means to diagnose the power lock system requires the use of a DRBIII® scan tool and the proper Diagnostic Procedures manual. The DRBIII® scan tool can provide confirmation that the PCI data bus is functional, that all of the electronic modules are sending and receiving the proper messages on the PCI data bus, and that the power lock motors are being sent the proper hard wired outputs by the relays for them to perform their power lock system functions.

STANDARD PROCEDURE

STANDARD PROCEDURE - DOUBLE ACTIVATION UNLOCK

The toggling of the double activation unlock feature (between enabled and disabled) can be performed with the use of the DRB lll® scan tool, or by the customer.

DRB III® PROGRAMMING

When using the DRB lll® scan tool, select:
(1) “Theft Alarm”
(2) “VTSS”
(3) “Miscellaneous”
and then the desired function.

CUSTOMER PROGRAMMING

(1) Open the driver door, sit in the driver seat, and close the driver door.

(2) Turn the ignition switch to the RUN position (without starting the vehicle) and then back to OFF. Repeat this step three additional times (for a total of four key ON/OFF cycles).

(3) Within ten seconds of switching the ignition switch to the OFF position for the last time (at the end of the fourth cycle in the above step), press the driver interior door lock switch to UNLOCK.

(4) A single chime will be heard to verify that the customer programmable toggle of the double activation unlock was successfully completed.

Steps 2 and 3 must be completed within 10 seconds.

NOTE: When toggling the double activation unlock feature (customer programmable), the toggle that happens will be from the last state of the double activation unlock. If the double activation unlock feature was enabled, after the toggle process, it will now be disabled and vice versa. There is no telltale to inform you of which state the double activation unlock feature is in.

STANDARD PROCEDURE - ROLLING DOOR LOCKS

The toggling of the rolling door lock feature (between enabled and disabled) can be performed with the use of the DRB lll® scan tool or by the customer.

DRB III® PROGRAMMING

When using the DRB lll® scan tool, select:
(1) “Theft Alarm”
(2) “VTSS”
(3) “Miscellaneous”
and then the desired function.

CUSTOMER PROGRAMMING

(1) Open the driver door, sit in the driver seat, and close the driver door.

(2) Turn the ignition switch to the RUN position (without starting the vehicle) and then back to OFF. Repeat this step three additional times (for a total of four key ON/OFF cycles).

(3) Within ten seconds of switching the ignition switch to the OFF position for the last time (at the end of the fourth cycle in the above step), press the driver interior door lock switch to LOCK.

(4) A single chime will be heard to verify that the customer programmable toggle of the rolling door locks was successfully completed.

Steps 2 and 3 must be completed within 10 seconds.

NOTE: When toggling the rolling door locks (customer programmable), the toggle that happens will be from the last state of the rolling door locks. If the rolling door locks were enabled, after the toggle process, they will now be disabled and vice versa. There is no telltale to inform you of which state the rolling door locks are in.

DOOR LOCK SWITCH

DIAGNOSIS AND TESTING - DOOR LOCK SWITCH

(1) Remove the switch from its mounting location, and disconnect from vehicle wiring harness. Refer to Door Lock Switch Removal and Installation in this section.

(2) Using an ohmmeter, refer to Door Lock Switch Resistance table to determine if switch resistance is correct in the Lock and Unlock switch positions. Refer to Wiring Diagrams for harness connector pinouts.

DOOR LOCK SWITCH (Continued)

DOOR LOCK SWITCH TEST

SWITCH POSITION	PINS	RESISTANCE VALUE
LOCK	2 AND 3	1K OHM ±10 %
UNLOCK	2 AND 3	249 OHM ± 10 %

REMOVAL

(1) Disconnect and isolate the battery negative cable.

(2) Remove front door trim panel (Refer to 23 - BODY/DOOR - FRONT/TRIM PANEL - REMOVAL).

(3) Disconnect wire connector to door lock switch.

(4) Remove two attaching screws to switch.

(5) Remove the switch from trim panel.

INSTALLATION

(1) Install the switch on trim panel.

(2) Install two attaching screws to switch.

(3) Connect wire connector to door lock switch.

(4) Install front door trim panel (Refer to 23 - BODY/DOOR - FRONT/TRIM PANEL - INSTALLATION).

(5) Connect the battery negative cable.

DOOR LOCK MOTOR

DESCRIPTION

The lock mechanisms are actuated by a reversible electric motor mounted within each door and tailgate. The power lock motors are integral to the door latch units.

The power lock motors cannot be adjusted or repaired and, if faulty or damaged, the door latch unit must be replaced.

OPERATION

The door lock motors are controlled by relays. A positive and negative battery connection to the two motor terminals will cause the motor to move in one direction. Reversing the current will cause the motor to move in the opposite direction.

DIAGNOSIS AND TESTING - DOOR LOCK MOTOR

The most reliable, efficient, and accurate means to diagnose the power lock system requires the use of a DRBIII® scan tool and the proper Diagnostic Procedures manual. The DRBIII® scan tool can provide confirmation that the PCI data bus is functional, that all of the electronic modules are sending and receiving the proper messages on the PCI data bus, and that the power lock motors are being sent the proper hard wired outputs by the door modules for them to perform their power lock system functions.

Refer to the appropriate wiring information. The wiring information includes wiring diagrams, proper wire and connector repair procedures, details of wire harness routing and retention, connector pin-out information and location views for the various wire harness connectors, splices and grounds.

(1) Make certain battery is in normal condition and fuses powering the RKE module aren't blown before circuits are tested.

(2) To determine which motor is faulty, check each individual door for electrical lock and unlock or disconnect the motor connectors one at a time, while operating the door lock switch.

(3) In the event that none of the motors work, the problem maybe caused by a shorted motor, a bad switch or a bad relay internal to the RKE module. Disconnecting a defective motor will allow the others to work.

(4) To test an individual door lock motor, disconnect the electrical connector from the motor.

(5) To lock the door, connect a 12 volt power source to one pin of the lock motor and a ground wire to the other pin.

(6) To unlock the door, reverse the wire connections at the motor pin terminals.

(7) If these results are NOT obtained, replace the motor.

LIFTGATE LOCK MOTOR

REMOVAL

(1) Disconnect and isolate the battery negative cable.
(2) Remove liftgate trim panel.
(3) Disconnect motor wire harness connector.
(4) Remove liftgate lock motor from liftgate (Fig. 1) by gently unsnapping.

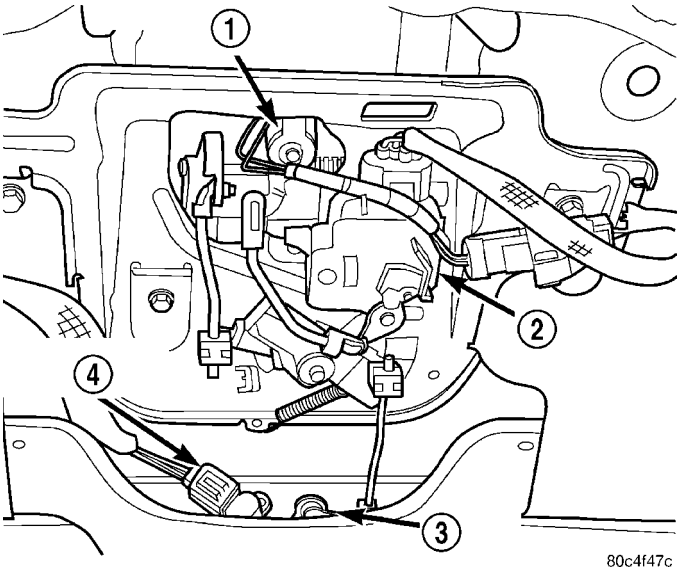

Fig. 1 Liftgate Lock Motor Location

1 - LIFTGATE CYLINDER LOCK SWITCH
2 - LIFTGATE LOCK MOTOR
3 - LATCH ASSEMBLY
4 - LIFTGATE AJAR SWITCH

INSTALLATION

(1) Install liftgate lock motor on the liftgate.
(2) Install motor wire harness connector.
(3) Install the liftgate trim panel.
(4) Connect the battery negative cable.

REMOTE KEYLESS ENTRY MODULE

DIAGNOSIS AND TESTING - REMOTE KEYLESS ENTRY MODULE

Refer to the appropriate wiring information. The wiring information includes wiring diagrams, proper wire and connector repair procedures, further details on wire harness routing and retention, as well as pin-out and location views for the various wire harness connectors, splices and grounds. Refer to the proper Body Diagnostic Procedures Manual for testing the Remote Keyless Entry system using a DRB III® scan tool.

REMOVAL

(1) Disconnect and isolate the battery negative cable.
(2) Remove the instrument panel top cover.
(3) Remove the two screws holding the RKE module to the instrument panel assembly (Fig. 2).

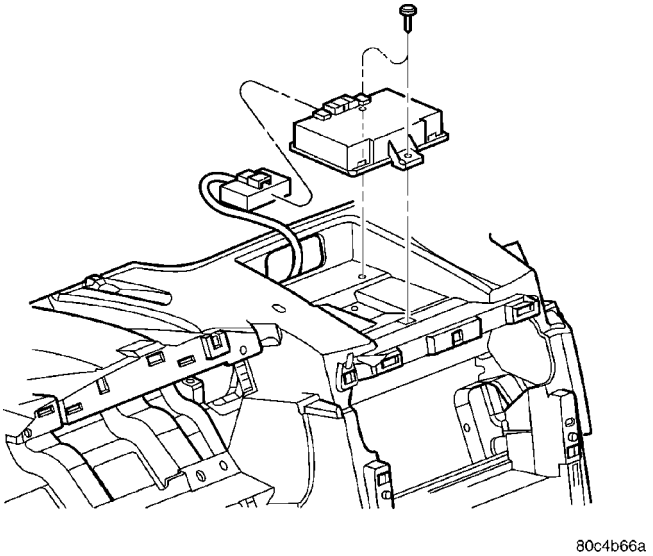

Fig. 2 RKE Module Remove/Install

(4) Slide locking tab of the wiring connector sideways to unlock tab, and remove connector from RKE module.
(5) Remove RKE module from vehicle.

NOTE: When replacing a faulty RKE Module, the replacement module must be configured with the DRB III® scan tool for proper operation. Refer to Vehicle Theft/Security Systems, Configuring a New Module under Service Procedures. Additionally, all transmitters must be reprogrammed to the new RKE module.

INSTALLATION

(1) Install the RKE module on instrument panel.
(2) Connect the wiring harness connector to the RKE module. Slide locking tab of the wiring connector sideways to lock tab.
(3) Install the two screws holding the RKE module to the instrument panel assembly.
(4) Install the instrument panel top cover.
(5) Connect the battery negative cable.

REMOTE KEYLESS ENTRY TRANSMITTER

DESCRIPTION

Fig. 3 Remote Keyless Entry (Key Fob) Transmitter

The transmitter has three buttons for operation (Fig. 3). They are **LOCK**, **UNLOCK**, and **PANIC**.

OPERATION

- The **UNLOCK** button will unlock the driver door flash the Park lamps twice and enable illuminated entry. Pushing and releasing the button once will unlock the driver door. Pushing and releasing the button two times within a five second period will unlock all doors (double unlock activation enabled).
- Upon pressing the **LOCK** button, the horn will sound a short chirp (if enabled) and flash the park lamps to notify that the all door lock signal was received and acted upon. Illuminated entry is cancelled and the interior lamps are faded to off.
- Pushing the **PANIC** button will cause the panic alarm to sound for three minutes, until the panic button is pressed a second time, or until the vehicle reaches a speed of 15 mph.

DIAGNOSIS AND TESTING - REMOTE KEYLESS ENTRY TRANSMITTER

Using special tool 9001, first test to ensure that the transmitter is functioning. Typical testing distance is 2.5 centimeters (1 inch) for Asian transmitters and 30.5 centimeters (12 inches) for all others. To test, position the transmitter as shown (Fig. 4). Press any transmitter button, then test each button individually. The tool will beep if a radio signal strength that lights five or more LED's is detected. Repeat this test three times. If transmitter fails any of the test refer to the Diagnostic Procedures manual.

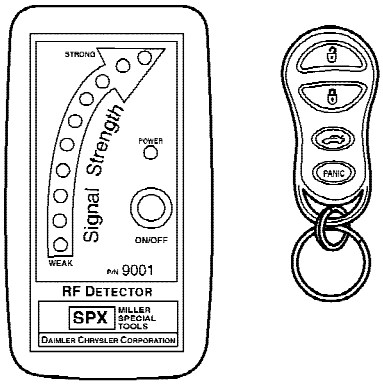

Fig. 4 RKE TRANSMITTER DIAGNOSIS

STANDARD PROCEDURE

STANDARD PROCEDURE - HORN CHIRP TOGGLE

The toggling of the horn chirp (between enabled and disabled) can be performed with the use of the DRB III® scan tool or by the customer.

DRB III® PROGRAMMING

When using the DRB lll® scan tool, select:
(1) “Theft Alarm”
(2) “VTSS”
(3) “Miscellaneous”
and then the desired function.

CUSTOMER PROGRAMMING

Using a transmitter programmed to the RKE Module, the status of the horn chirp may be toggled by the customer.

NOTE: The RKE Module is responsible for keeping track of the horn chirp status; thus this procedure does not need to be repeated for each transmitter programmed to the system.

(1) With the ignition switch in RUN position, press and hold the transmitter Unlock button for a minimum of 4 seconds to a maximum of 10 seconds.

(2) While holding the UNLOCK button for 4-10 seconds, press the LOCK button. A chime will be heard to indicate a successful toggle, at which time both buttons may be released.

REMOTE KEYLESS ENTRY TRANSMITTER (Continued)

STANDARD PROCEDURE - TRANSMITTER PROGRAMING

The Remote Keyless Entry transmitters can be programmed with the use of the DRB III® scan tool or by the customer.

DRB III® PROGRAMMING

When using the DRB lll® scan tool, select:

(1) “Theft Alarm”

(2) “VTSS”

(3) “Miscellaneous”

and then the desired function.

CUSTOMER PROGRAMMING

(1) Insert the key into the ignition switch, and turn the ignition switch to the RUN position (without starting the vehicle).

(2) Using the RKE transmitter programmed to the RKE module, press and continuously hold down the UNLOCK button for 4-10 seconds.

(3) Within the 4-10 second time range, continue to hold the UNLOCK button and press the PANIC button. Both buttons may then be released. Upon the PANIC button being depressed, the message for customer programming mode will be transmitted to the RKE module.

(4) A chime will be heard to verify that the customer programming mode has been entered.

(5) Press and release any button on each transmitter that is to be programmed to the RKE module, including any transmitters which were previously programmed to the RKE module (with a maximum of four possible). After each transmitter is successfully programmed, a chime will be heard to verify that successful programming of the transmitter has occurred.

(6) After thirty seconds, or upon the ignition switch being turned OFF, a chime will indicate that the RKE module has exited the programming mode.

STANDARD PROCEDURE - RKE TRANSMITTER BATTERIES

The Remote Keyless Entry (RKE) transmitter case snaps open and shut for battery access. To replace the RKE transmitter batteries:

(1) Using a thin coin, gently pry at the notch in the center seam of the RKE transmitter case halves near the key ring until the two halves unsnap.

(2) Lift the back half of the transmitter case off of the RKE transmitter.

(3) Remove the two batteries from the RKE transmitter.

(4) Replace the two batteries with new Panasonic 2016, or equivalent. Be certain that the batteries are installed with their polarity correctly oriented.

(5) Align the two RKE transmitter case halves with each other, and squeeze them firmly and evenly together until they snap back into place.

SPECIFICATIONS - TRANSMITTER RANGE

Normal operation range is within 7 meters (23 ft.) of the vehicle. Range may be better or worse depending on the environment around the vehicle.

POWER MIRRORS

TABLE OF CONTENTS

page

POWER MIRRORS
DESCRIPTION 8
OPERATION 8
DIAGNOSIS AND TESTING - POWER MIRRORS 8
POWER MIRROR SWITCH - LHD
DIAGNOSIS AND TESTING - POWER MIRROR SWITCH - LHD 9
REMOVAL 9
INSTALLATION 9
POWER FOLDAWAY MIRROR SWITCH - RHD
DIAGNOSIS AND TESTING - POWER FOLDAWAY MIRROR SWITCH - RHD 10
REMOVAL 11
INSTALLATION 11

POWER MIRRORS

DESCRIPTION

The mirrors are controlled by a single switch assembly located on the front left lower instrument panel (LHD) or on the front right lower instrument panel (RHD). The push button switch (LHD) or rocker switch (RHD) uses L (left) and R (right) for mirror selection and a button to push for the desired direction of mirror movement.

The motors which operate the mirrors are part of the mirror assembly and cannot be replaced separately.

These vehicles may be equipped with power foldaway mirrors. This feature allows both the driver and passenger side view mirrors to fold inward (retract) on demand. The vehicle has an additional switch located below the power mirror switch that controls the folding function of the mirror assembly.

The foldaway side view mirror is attached to the vehicle's door in the same manner as mirrors without the foldaway option. The foldaway mirrors unique option is the internal motor which allows the mirrors to fold inward. The fold-away mirror motor is not serviceable separately and if a motor is found to be faulty, the entire side view mirror must be replaced.

OPERATION

Use the mirror select switch, located to the left of the steering column on the instrument panel, to adjust the view obtained in the outside mirrors. Press the L or R button for Left or Right mirror selection. Use the center off position to guard against accidentally moving a mirror position.

Select a mirror and press one of the four arrows for the direction you want the mirror to move.

DIAGNOSIS AND TESTING - POWER MIRRORS

WIRING VOLTAGE TEST (LHD)

The following wiring test determines whether or not voltage is continuous through the body harness to switch.

(1) Remove the power mirror switch.

(2) Disconnect wire connector from back of power mirror switch.

(3) Connect the clip end of a 12 volt test light to Pin 7 in the harness connector at the mirror switch. Touch the test light probe to Pin 3.

If the test light illuminates, the wiring circuit between the battery and switch is OK.

If the lamp does not illuminate, first check fuse 18 in the Junction Block (JB). If fuse 18 is OK, then check for a broken wire.

Refer to the appropriate wiring information. The wiring information includes wiring diagrams, proper wire and connector repair procedures, details of wire harness routing and retention, connector pin-out information and location views for the various wire harness connectors, splices and grounds.

POWER MIRROR MOTOR TEST (LHD)

If the power mirror switch is receiving proper current and ground and mirrors do not operate, proceed with power mirror motor test. Refer to the appropriate wiring information. The wiring information includes wiring diagrams, proper wire and connector repair procedures, details of wire harness routing and retention, connector pin-out information and location views for the various wire harness connectors, splices and grounds.

(1) Disconnect wire harness connector to power mirror switch.

(2) Using two jumper wires:

- Connect one to a 12 volt source
- Connect the other to a good body ground

POWER MIRRORS (Continued)

• Refer to the Mirror Motor Test Chart for proper wire connections at the switch connector (Fig. 1).

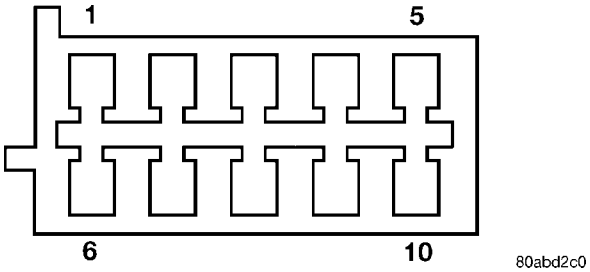

Fig. 1 Mirror Switch Harness Connector - LHD

MIRROR MOTOR TEST CHART

12 VOLTS	GROUND	MIRROR REACTION	
SWITCH CONNECTOR		RIGHT	LEFT
PIN 4	PIN 1	-	UP
PIN 8	PIN 1	-	LEFT
PIN 1	PIN 4	-	DOWN
PIN 1	PIN 8	-	RIGHT
PIN 9	PIN 10	UP	-
PIN 2	PIN 10	LEFT	-
PIN 10	PIN 9	DOWN	-
PIN 10	PIN 2	RIGHT	-

(3) If results shown in table are not obtained, check for open or shorted circuit. Replace mirror assembly as necessary.

POWER MIRROR SWITCH - LHD

DIAGNOSIS AND TESTING - POWER MIRROR SWITCH - LHD

(1) Disconnect and isolate the battery negative cable.

(2) Remove power mirror switch (Refer to 8 - ELECTRICAL/POWER MIRRORS/POWER MIRROR SWITCH - REMOVAL).

(3) Using an ohmmeter, test for continuity between the terminals of the switch as shown in the Mirror Switch Test table.

(4) If test results are not obtained as shown in the Mirror Switch Test table, replace the switch.

REMOVAL

(1) Disconnect and isolate the battery negative cable.

(2) Remove the left lower instrument panel bezel. Pull top rearward, lower to floor and with a quick pulling motion remove off instrument panel.

MIRROR SWITCH TEST TABLE

SWITCH POSITION Move Button	CONTINUITY BETWEEN TERMINALS
Mirror in L Position	
▲	PIN 2 to 4 PIN 4 to 7 PIN 8 to 10
▶	PIN 3 to 8 PIN 8 to 9 PIN 4 to 10
▼	PIN 2 to 8 PIN 7 to 8 PIN 4 to 10
◀	PIN 3 to 4 PIN 4 to 9 PIN 8 to 10
Mirror in R Position	
▲	PIN 2 to 4 PIN 4 to 7 PIN 1 to 8
▶	PIN 1 to 4 PIN 3 to 8 PIN 8 to 9
▼	PIN 1 to 4 PIN 2 to 8 PIN 7 to 8
◀	PIN 3 to 4 PIN 1 to 8 PIN 4 to 9

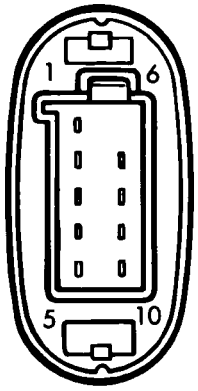

948T-5

POWER MIRROR SWITCH

(3) Remove two screws to the left instrument panel end cover.

(4) Pull the left end cover rearward to unsnap. Maneuver it out from underneath the left A-pillar trim and top cover. Removal of these components is not necessary.

(5) Disconnect the power mirror switch wiring connector and remove end cover from vehicle.

(6) With the left end cover on the bench, gently pry in on the tabs (4) of the mirror switch and push through the front of the cover and remove (Fig. 2).

INSTALLATION

(1) Place the mirror switch in cover opening and firmly snap into place.

(2) Connect the power mirror switch wiring connector.

(3) Place the left end cover in position and snap into place. Make sure that it is underneath the A-pillar trim and top cover.

(4) Install two screws to the left instrument panel end cover.

(5) Place left lower instrument panel bezel in position and make sure the orientation of the hinge is correct and snap bezel hinge into place

POWER MIRROR SWITCH - LHD (Continued)

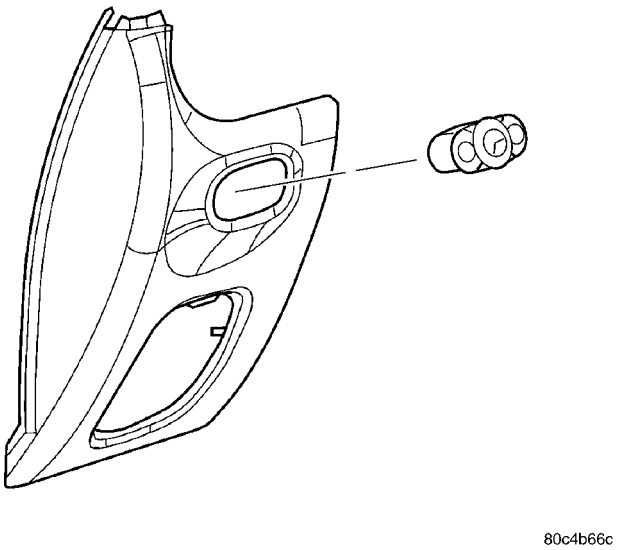

Fig. 2 Power Mirror Switch Remove/Install

(6) Roll bezel upward and snap into place.
(7) Connect the battery negative cable.

POWER FOLDAWAY MIRROR SWITCH - RHD

DIAGNOSIS AND TESTING - POWER FOLDAWAY MIRROR SWITCH - RHD

The following test is designed to be used only on vehicles equipped with power fold-away side view mirrors.

(1) Remove power mirror switch from mounting position (Refer to 8 - ELECTRICAL/POWER MIRRORS/POWER FOLDAWAY MIRROR SWITCH - REMOVAL).

(2) Using an ohmmeter, test for continuity between the terminals of the switch as shown in the tables below (Fig. 3).

NOTE: When testing using the chart below be certain to read the chart correctly. Example - When testing left mirror "DOWN↓", pins 1, 9, 10 will show continuity to each other but not with 3, 4, 5.

(3) If test results are not obtained as shown in the tables below, replace the switch.

EXTENDED MIRROR SWITCH CIRCUIT TEST

NOTE: MIRROR POSITION SWITCH MUST BE IN THE "EXTENDED" POSITION TO USE CHART BELOW.

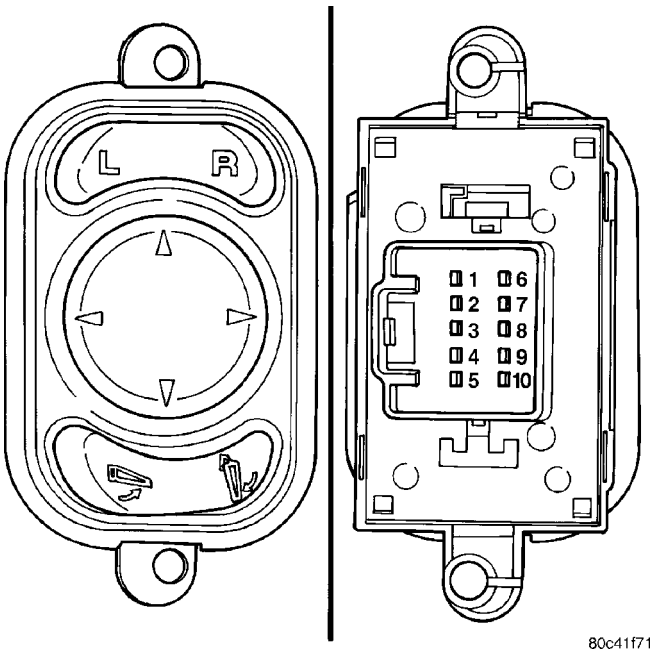

Fig. 3 Power Fold-Away Mirror Switch

WOBBLE PLATE POSITION	LEFT MIRROR SELECTED	RIGHT MIRROR SELECTED
	CONTINUITY BETWEEN PINS	CONTINUITY BETWEEN PINS
↓	1, 9, 10 3, 4, 5	6, 9, 10 3, 4, 5
↑	1, 4, 5 3, 9, 10	6, 4, 5 3, 9, 10
→	2, 9, 10 3, 4, 5	7, 9, 10 3, 4, 5
←	2, 4, 5 3, 9, 10	7, 4, 5 3, 9, 10

POWER FOLDAWAY MIRROR SWITCH - RHD (Continued)

RETRACTED MIRROR SWITCH CIRCUIT TEST

NOTE: MIRROR POSITION SWITCH MUST BE IN THE "RETRACTED" POSITION TO USE CHART BELOW.

WOBBLE PLATE POSITION	LEFT MIRROR SELECTED	RIGHT MIRROR SELECTED
	CONTINUITY BETWEEN PINS	CONTINUITY BETWEEN PINS
↓	1, 3, 4, 9	3, 4, 6, 9
↑	1, 3, 4, 9	3, 4, 6, 9
→	2, 3, 4, 9	3, 4, 7, 9
←	2, 3, 4, 9	3, 4, 7, 9

REMOVAL

(1) Disconnect and isolate the battery negative cable.

(2) Remove the lower instrument panel bezel from under steering column.

(3) Remove the instrument panel end cover retaining screws and pull rearward to release retaining clips.

(4) Disconnect power mirror switch electrical connector (Fig. 4).

(5) Remove the mirror switch retaining screws and remove the switch from the end cover.

INSTALLATION

(1) Connect mirror switch electrical connector to switch.

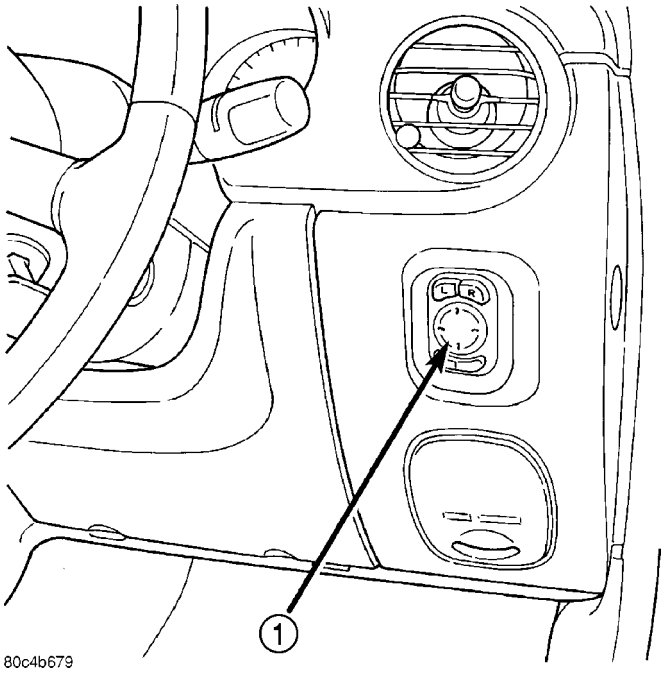

Fig. 4 RHD Power Mirror Switch Location

1 - POWER FOLDAWAY MIRROR SWITCH

(2) Install switch retaining screws holding switch to end cover.

(3) Install the lower instrument panel bezel.

(4) Connect battery negative cable.

POWER SEAT SYSTEM

TABLE OF CONTENTS

	page
POWER SEAT SYSTEM	
DESCRIPTION	12
OPERATION	12
DIAGNOSIS AND TESTING - POWER SEAT SYSTEM	13
DRIVER SEAT SWITCH	
DESCRIPTION	13
OPERATION	13
DIAGNOSIS AND TESTING - DRIVER SEAT SWITCH	13
REMOVAL	14
INSTALLATION	14
POWER SEAT TRACK	
DESCRIPTION	14
OPERATION	14
DIAGNOSIS AND TESTING - POWER SEAT TRACK	14
REMOVAL	15
INSTALLATION	15
LUMBAR	
DESCRIPTION	16
OPERATION	16
REMOVAL	16
INSTALLATION	16

POWER SEAT SYSTEM

DESCRIPTION

A driver's side power front seat is an available factory-installed option for this vehicle. The power seat system option allows the driver to electrically adjust his/her seating position for optimum control and comfort using the power seat switch located on the outboard seat cushion side shield of the drivers front seat.

The power seat system includes the following major components which are covered in further detail later in this section of the manual:

- Power Driver Seat Switch
- Power Seat Track Assembly
- Circuit Breaker
- Wire Harness

WARNING: SOME VEHICLES ARE EQUIPPED WITH SEATBACK MOUNTED AIRBAGS (Fig. 1). BEFORE ATTEMPTING TO DIAGNOSE OR SERVICE ANY SEAT OR POWER SEAT SYSTEM COMPONENT YOU MUST FIRST DISCONNECT AND ISOLATE THE BATTERY NEGATIVE CABLE. THEN WAIT TWO MINUTES FOR THE SYSTEM CAPACITOR TO DISCHARGE BEFORE FURTHER SYSTEM SERVICE. THIS IS THE ONLY SURE WAY TO DISABLE THE AIRBAG SYSTEM. FAILURE TO DO SO COULD RESULT IN ACCIDENTAL AIRBAG DEPLOYMENT AND POSSIBLE PERSONAL INJURY.

Refer to **Power Seat** in Wiring Diagrams for complete circuit diagrams. Following are general descriptions of the major components in the power seat system.

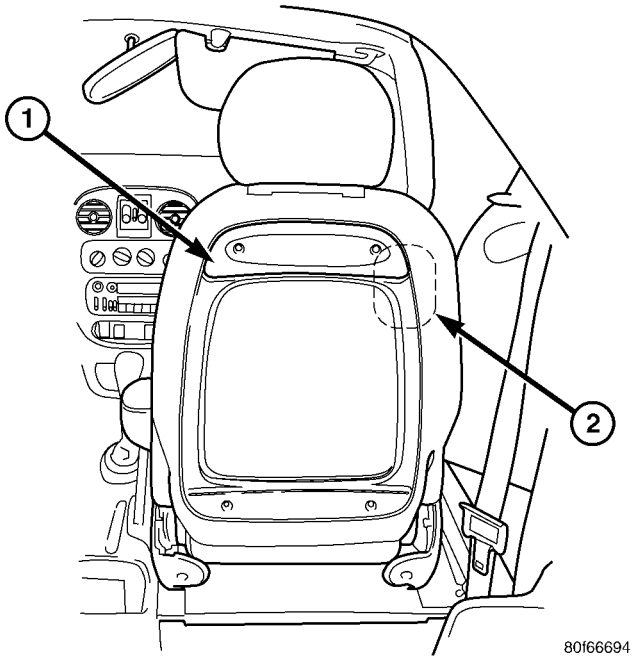

Fig. 1 PT AIRBAG EQUIPPED FRONT SEATS

1 - Front Seat Back Panel
2 - Internal Airbag Location

OPERATION

The power seat system receives battery current through a fuse in the Power Distribution Center (PDC) and a circuit breaker in the junction block so that the power seats remain operational, regardless of the ignition switch position. See the owner's manual in the vehicle glove box for more information on the features, use and operation of the power seat system.

POWER SEAT SYSTEM (Continued)

DIAGNOSIS AND TESTING - POWER SEAT SYSTEM

Before any testing of the power seat system is attempted, the battery should be fully-charged and all wire harness connections and pins cleaned and tightened to ensure proper continuity and grounds. Refer to the appropriate wiring information. The wiring information includes wiring diagrams, proper wire and connector repair procedures, further details on wire harness routing and retention, as well as pin-out and location views for the various wire harness connectors, splices and grounds.

(1) If all power seats are inoperative, check the automatic resetting circuit breaker in the Junction Block (JB). Refer to the Power Distribution section of this manual for the diagnosis and testing procedure.

(2) With the dome lamp on, apply the power seat switch in the direction of the failure.

(3) If the dome lamp dims, the seat or the power seat track may be jammed. Check under and behind the seat for binding or obstructions.

(4) If the dome lamp does not dim, proceed with testing of the individual power seat system components and circuits.

The power seat switch should not be held applied in either direction after the adjuster has reached its travel limit. The power seat adjuster motor contains a self-resetting circuit breaker to protect it from overload. However, consecutive or frequent resetting of the circuit breaker must not be allowed to continue, or the motor may be damaged.

DIAGNOSIS AND TESTING - DRIVER SEAT SWITCH

For complete circuit diagrams, refer to **Wiring Diagrams**.

(1) Disconnect and isolate the battery negative cable.

(2) Remove the power seat switch from the outboard seat cushion side shield. Refer to **Power Seat Switch** in the Removal and Installation section of this group for the procedure.

(3) Use an ohmmeter to test the continuity of the power seat switch in each switch position. See the Power Seat Switch Continuity chart (Fig. 2). If OK, refer to the **Seat Track** Diagnosis and Testing section of this group. If not OK, replace the faulty power seat switch.

DRIVER SEAT SWITCH

DESCRIPTION

A single two-way momentary power seat switch is located on the outboard seat cushion side shield of the drivers front seat. The power seat switch is secured to the back of the seat cushion side shield with two screws, and the switch paddle protrudes through a hole to the outside of the shield. The switch paddle is located in a shallow depression molded into the outer surface of the seat cushion side shield that helps to shroud it from unintentional actuation when entering or exiting the vehicle.

The power seat switch cannot be adjusted or repaired and, if faulty or damaged, it must be replaced.

OPERATION

When the power seat switch paddle is actuated, a battery feed and a ground path are applied through the switch contacts to the power seat track adjuster motor. The motor operates to move the seat track adjuster through its drive unit in the selected direction until the switch is released, or until the travel limit of the adjuster is reached. When the switch is moved in the opposite direction, the battery feed and ground path to the motor are reversed through the switch contacts. This causes the motor to run in the opposite direction.

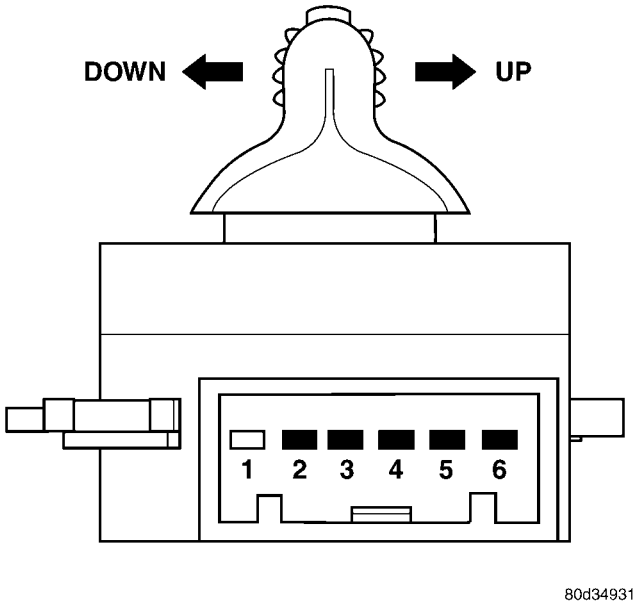

Fig. 2 POWER SEAT SWITCH CONTINUITY CHART / SWITCH PIN-OUT

POWER SEAT SWITCH	
SWITCH POSITION	CONTINUITY BETWEEN
Off	2-4, 3-5
UP	3-5, 4-6
DOWN	2-4, 3-6

DRIVER SEAT SWITCH (Continued)

REMOVAL

(1) Open hood.
(2) Disconnect and isolate the battery negative cable.
(3) Remove two screws to left cushion side shield.
(4) Disconnect wiring from switch.
(5) Remove attaching screws and switch from bezel.

INSTALLATION

(1) Install attaching switch and two attaching screws to bezel.
(2) Connect wiring from switch.
(3) Install screws to left cushion side shield.
(4) Connect the battery negative cable.
(5) Close hood.
(6) Verify vehicle and system operation.

POWER SEAT TRACK

DESCRIPTION

The power seat track on the PT incorporates a front and rear riser (Fig. 3). These risers are not part of the power seat track and must be removed in order to service the power seat track assembly. One 12v motor is utilized in the power seat track (Fig. 3). The motor is connected to a worm-drive gearbox that moves the seat adjuster up and down. The drivers front seat can be raised or lowered using the power seat switch, located on the outboard side of the seat cushion side shield.

The motor contains a self-resetting circuit breaker to protect it from overload. Consecutive or frequent resetting of the circuit breaker may cause damage to the motor or circuit breaker.

The power seat track cannot be repaired, and is serviced only as a complete unit. If any component in this unit is faulty or damaged, the entire power seat track unit must be replaced.

OPERATION

One single armature permanent magnet reversible motor is coupled to a worm gear box assembly. It is located in between the seat tracks and upper supports. The one single gear motor assembly attaches to the seat tracks and provide the various seat movements.

The electrical circuit is protected by a 20 amp circuit breaker located in the fuse block.

When a power seat switch is actuated, a battery feed and a ground path are applied through the switch contacts to the appropriate motor. The motor and drive operate to move the seat in the selected direction until the power seat switch is released, or until the travel limit of the power seat track adjuster is reached. When the power seat switch is moved in the opposite direction, the battery feed and ground path to the motor are reversed through the switch contacts. This causes the motor and drive to run in the opposite direction.

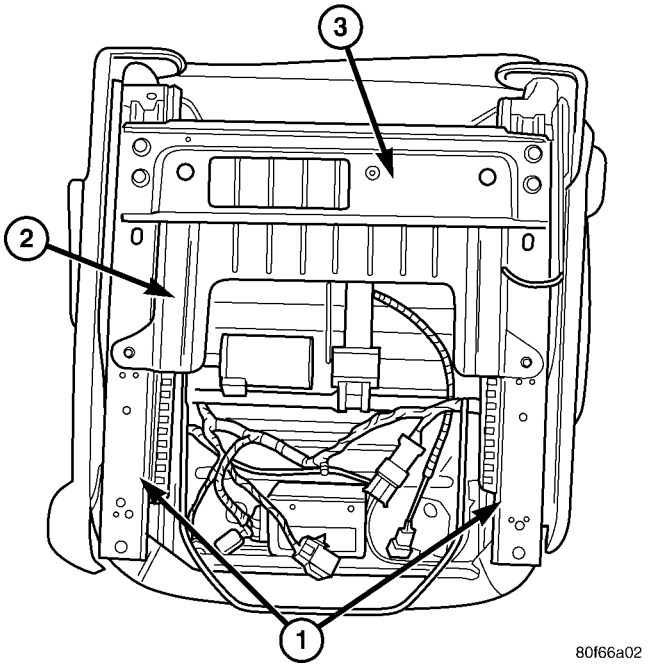

Fig. 3 PT POWER SEAT TRACK

1 - Power Seat Track
2 - Lower Seat Track Cover
3 - Rear Seat Cushion Riser

DIAGNOSIS AND TESTING - POWER SEAT TRACK

Refer to the appropriate wiring information. The wiring information includes wiring diagrams, proper wire and connector repair procedures, further details on wire harness routing and retention, as well as pin-out and location views for the various wire harness connectors, splices and grounds.

Operate the power seat switch to move the seat motor in each direction. The seat should move in each of the selected directions. If the power seat track fails to operate in only one direction, move the seat a short distance in the opposite direction and test again to be certain that the adjuster is not at its travel limit. If the power seat track still fails to operate in only one direction, begin by testing the power seat switch for the inoperative seat. If the power seat track fails to operate in more than one direction, proceed as follows:

(1) Test the circuit breaker in the Junction Block (JB). If OK, Step 2. If not OK, replace the faulty circuit breaker.

(2) Remove the power seat switch from the seat. Check for battery voltage at the fused B(+) circuit

POWER SEAT TRACK (Continued)

cavity of the power seat wire harness connector for the power seat switch. If OK, go to Step 3. If not OK, repair the open fused B(+) circuit between the power seat switch and the JB as required.

(3) Check for continuity between the ground circuit cavity of the power seat wire harness connector for the power seat switch and a good ground. There should be continuity. If OK, Step 4. If not OK, repair the open ground circuit to ground as required.

(4) Test the power seat switch. If the switch tests OK, test the circuits of the power seat wire harness for the inoperative power seat motor(s) between the power seat switch and the inoperative motor for shorts or opens. If the circuits check OK, replace the faulty power seat track. If the circuits are not OK, repair the power seat wire harness as required.

REMOVAL

(1) Remove the power seat from the vehicle and set face down on a clean surface. (Refer to 23 - BODY/SEATS/SEAT - REMOVAL)

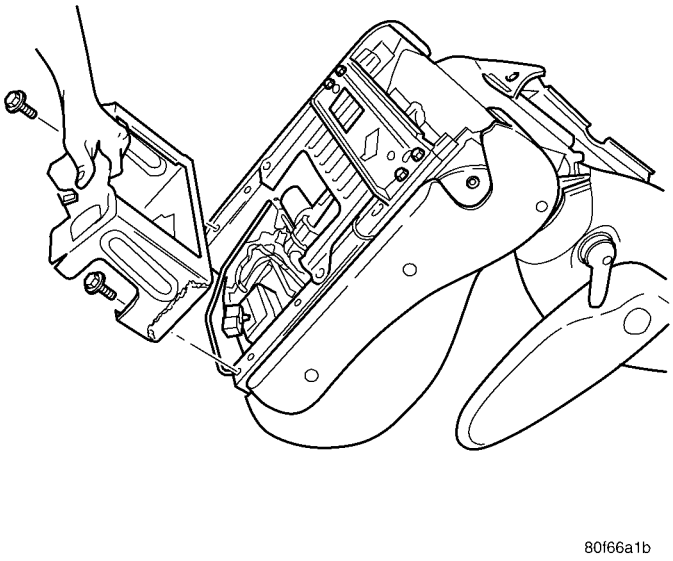

Fig. 4 SEAT FRONT RISER REMOVAL/ INSTALLATION

(2) Remove the bolts retaining the front riser and set the front seat riser aside (Fig. 4).

(3) Remove the bolts retaining the rear riser (Fig. 5) and set the seat riser aside.

(4) Remove the lower seat track cover screws and set it aside.

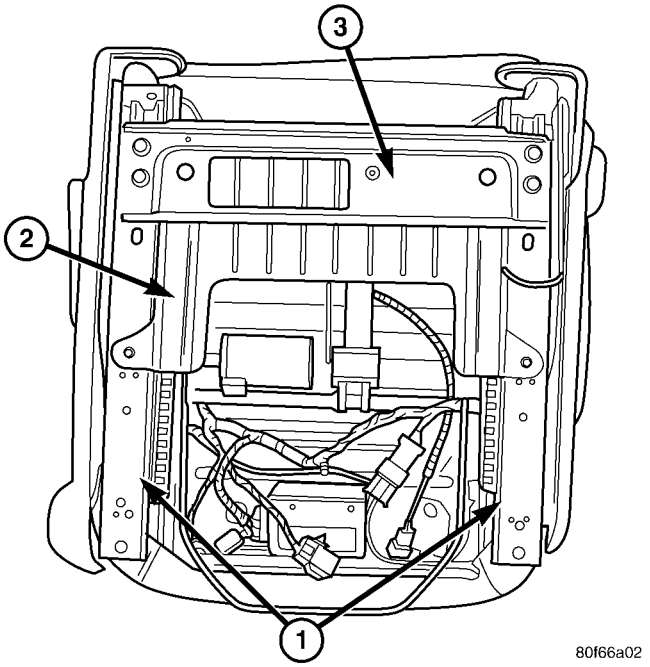

Fig. 5 POWER SEAT TRACK

1 - Power Seat Track
2 - Lower Seat Track Cover
3 - Rear Seat Cushion Riser

(5) Remove the seat cushion side shields and set aside.

(6) Disengage and disconnect the power seat wire harness from the power seat track.

(7) Remove the power seat track retaining fasteners and remove the power seat track from the seat.

INSTALLATION

(1) Reinstall the power seat track onto the seat cushion frame. Torque bolts to 21 ft. lbs. (28 N·m).

(2) Secure and connect the power seat wire harness on the power seat track.

(3) Install the seat cushion side shields.

(4) Install the lower seat track cover.

(5) Install the bolts retaining the rear riser. Torque bolts to 21 ft. lbs. (28 N·m).

(6) Install the bolts retaining the front riser. Torque bolts to 21 ft. lbs. (28 N·m).

(7) Reinstall the power seat assembly into the vehicle as a unit. (Refer to 23 - BODY/SEATS/SEAT - INSTALLATION). Torque bolts to 45 ft. lbs. (61 N·m).

(8) Reconnect the battery negative cable.

LUMBAR

DESCRIPTION

Some vehicles are equipped with a mechanical lumbar support mechanism (Fig. 6). The only visible evidence of this option is the separate power lumbar control lever that is located on the inboard seat cushion side shield. The lumbar adjuster and cable are concealed beneath the seat back trim cover and padding, where they are secured to the seat back frame.

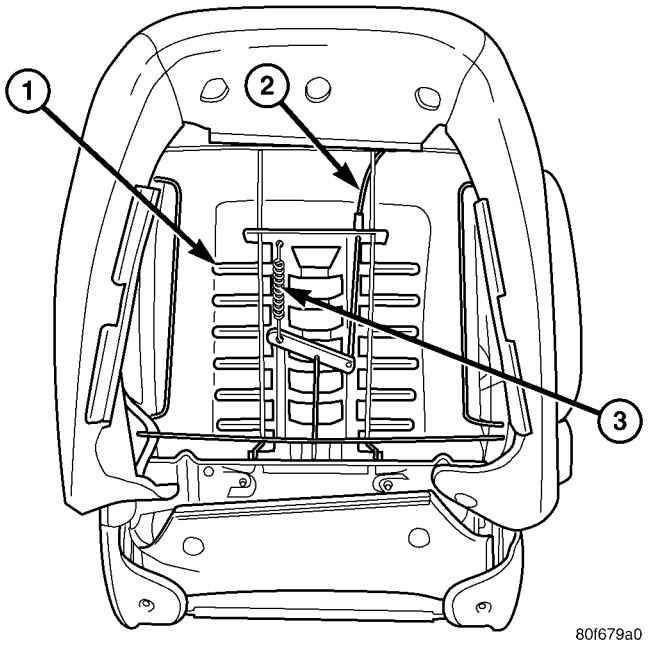

Fig. 6 PT LUMBAR ASSEMBLY

1 - LUMBAR ASSEMBLY
2 - LUMBAR CONTROL CABLE
3 - SPRING

OPERATION

The lumbar adjuster lever, located on the inboard side of each front seat attaches to a cable located inside the seat back. This cable/lever operates the lumbar adjuster mechanism. When the lumbar adjuster lever is moved up/down the attached cable is extended or retracted. The action of this cable compresses or relaxes a grid of flexible slats, located in the seat back. The more this grid is compressed, the more the slats bow outward against the center of the seat back padding, providing additional lumbar support.

REMOVAL

(1) Remove the plastic seat back panel from the appropriate front seat.

(2) Partially remove the seat back trim cover from the seat back frame.

(3) Disconnect the lumbar mechanism spring and disconnect the cable from the lumbar assembly.

(4) Unsnap the lumbar assembly from the seat back frame and remove from the seat.

INSTALLATION

(1) Snap the lumbar assembly on the seat back frame. Be careful not to break the retaining pins, if broken replace with new pieces.

(2) Connect the lumbar cable and connect the mechanism spring on the lumbar assembly.

(3) Install the seat back trim cover on the seat back frame.

(4) Install the plastic seat back panel on the front seat.

POWER WINDOWS

TABLE OF CONTENTS

page

POWER WINDOWS
DESCRIPTION 17
OPERATION 17
DIAGNOSIS AND TESTING - POWER WINDOWS 17
POWER WINDOW SWITCH
DIAGNOSIS AND TESTING - POWER WINDOW SWITCH 18
REMOVAL 19
INSTALLATION 19
WINDOW MOTOR
REMOVAL 19
INSTALLATION 19

POWER WINDOWS

DESCRIPTION

The power window system allows each of the door windows to be raised and lowered electrically by actuating a switch on the instrument panel (front windows) or center console (rear windows). The front window switch allows the front occupants to lock out the individual rear switches from operation. The power window system receives battery feed through a circuit breaker in the fuse block, only when the ignition switch is in the ON position.

The power window system includes the power window switches on the instrument panel (front windows) and center console (rear windows), the circuit breaker in the fuse block, and the power window motors inside each door. For service of the mechanical components, such as the regulator, window tracks, or glass, refer to Body Group.

OPERATION

The front and rear door window lift motors are of the permanent magnet type. A battery positive and negative connection to either of the two motor terminals will cause the motor to rotate in one direction. Reversing current through these same two connections will cause the motor to rotate in the opposite direction.

Each individual motor is grounded through their respective switch.

DIAGNOSIS AND TESTING - POWER WINDOWS

WIRING VOLTAGE TEST

The following wiring test determines whether or not voltage is continuous through the body harness to the front switch.

(1) Remove the power window switch and bezel.

(2) Disconnect wire connector from back of power window switch.

(3) Switch ignition to the ON position.

(4) Connect the clip end of a 12 volt test light to Pin 4 of the window switch harness connector. Touch the test light probe to Pin 3.

- If the test light illuminates, the wiring circuit between the battery and switch is OK.
- If the lamp does not illuminate, first check 30 amp circuit breaker in the fuse block. If circuit breaker is OK, then check for a broken wire.

Refer to the appropriate wiring information. The wiring information includes wiring diagrams, proper wire and connector repair procedures, details of wire harness routing and retention, connector pin-out information and location views for the various wire harness connectors, splices and grounds.

POWER WINDOW MOTOR TEST

If the power window motor is receiving proper current and ground and does not operate, proceed with motor test. Refer to the appropriate wiring information. The wiring information includes wiring diagrams, proper wire and connector repair procedures, details of wire harness routing and retention, connector pin-out information and location views for the various wire harness connectors, splices and grounds.

(1) Remove front door trim panel as necessary to gain access to power window motor wire connector.

(2) Disconnect power window motor wire connector from door harness.

(3) Using two jumper wires, connect one to a battery (+) source and the other to a good ground (-).

(4) Connect the Negative (-) jumper probe to one of the motor connector terminals.

(5) Momentarily touch the Positive (+) jumper probe to the other motor connector terminal.

When positive probe is connected the motor should rotate in one direction to either move window up or down. If window is all the way up or down the motor

POWER WINDOWS (Continued)

will grunt and the inner door panel will flex when actuated in that one direction.

(6) Reverse jumper probes at the motor connector terminals and window should now move in opposite direction. If window does not move or grunt, replace the motor.

If window moved completely up or down, reverse the jumper probes and cycle window to the opposite position to verify full operation.

If motor grunts and does not move, verify that regulator is not binding.

POWER WINDOW SWITCH

DIAGNOSIS AND TESTING - POWER WINDOW SWITCH

Remove the switch. Using an ohmmeter, test the window switch for continuity in all positions listed in the Continuity Table. Refer to the Power Window Switch Continuity table to determine if continuity is correct (Fig. 1) and (Fig. 2).

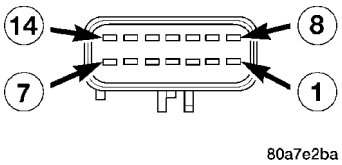

Fig. 1 FRONT WINDOW SWITCH

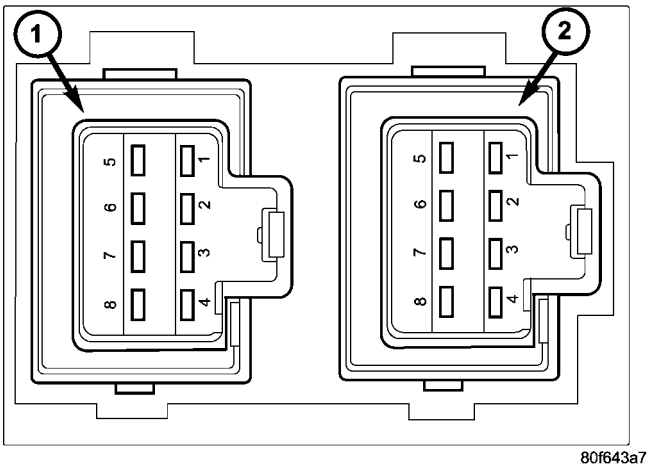

Fig. 2 REAR WINDOW SWITCHES

1 - RIGHT REAR SWITCH
2 - LEFT REAR SWITCH

POWER WINDOW SWITCH CONTINUITY TABLE

SWITCH POSITION	CONTINUITY BETWEEN
	FRONT WINDOW SWITCH
LOCKOUT SWITCH (TOP OF SWITCH DEPRESSED)	PIN 12 AND 5
LEFT FRONT UP	PIN 12 AND 14
RIGHT FRONT UP	PIN 12 AND 7
LEFT REAR UP	PIN 12 AND 8
LEFT REAR DOWN	PIN 12 AND 9
RIGHT REAR UP	PIN 12 AND 1
RIGHT REAR DOWN	PIN 12 AND 2
	LEFT OR RIGHT REAR SWITCH
OFF	PIN 2 AND 5 PIN 3 AND 8
UP	PIN 4 AND 5
DOWN	PIN 4 AND 8

To test the left front down and express down switch position, connect pin 4 to ground and pin 12 to a 12 volt source. Using a voltmeter, measure for voltage from pin 13 to ground.

To test the right front down and express down switch position, connect pin 4 to ground and pin 12 to a 12 volt source. Using a voltmeter, measure for voltage from pin 3 to ground. If the correct results are not obtained, replace the switch.

POWER WINDOW SWITCH (Continued)

REMOVAL

FRONT

(1) Disconnect and isolate the battery negative cable.

(2) Using a trim stick (special tool #C-4755) or equivalent, gently pry at the top of the switch (Fig. 3).

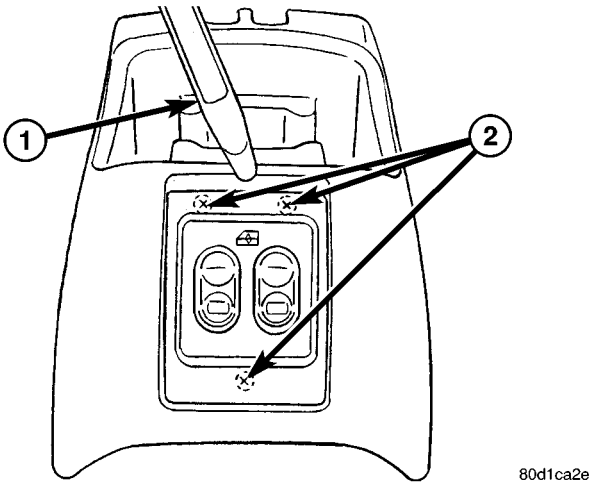

Fig. 3 WINDOW SWITCH REMOVAL (REAR SHOWN - FRONT SIMILAR)

1 - TRIM STICK
2 - RETAINING CLIP LOCATION

(3) Remove switch and disconnect electrical harness connector (Fig. 4).

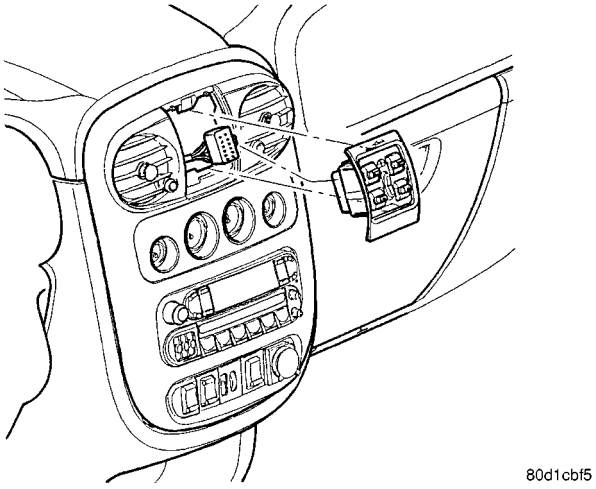

Fig. 4 FRONT WINDOW SWITCH

REAR

(1) Disconnect and isolate the battery negative cable.

(2) Using a trim stick (special tool #C-4755) or equivalent, gently pry at the top of the switch (Fig. 3).

(3) Remove switch and disconnect electrical harness connectors (Fig. 5).

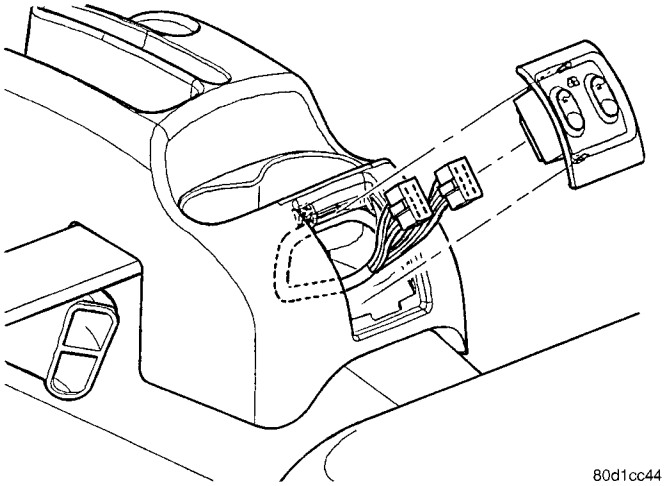

Fig. 5 REAR WINDOW SWITCH

INSTALLATION

FRONT

(1) Connect electrical harness connector to switch.

(2) Align switch and press into position.

(3) Connect battery negative cable.

REAR

(1) Connect electrical harness connector to switch.

(2) Align switch and press into position.

(3) Connect battery negative cable.

WINDOW MOTOR

REMOVAL

(1) Move the window to the full UP position position, if possible.

(2) Disconnect and isolate the battery negative cable.

(3) Remove door trim panel (Refer to 23 - BODY/DOOR - FRONT/TRIM PANEL - REMOVAL).

(4) Disconnect electrical harness connector from motor.

(5) Remove window regulator.

(6) With regulator on bench, remove three screws retaining the motor to the regulator and remove motor.

INSTALLATION

(1) With regulator on bench, install three screws retaining the motor to the regulator.

(2) Install the window regulator.

(3) Connect the electrical harness connector to window motor.

(4) Install door trim panel (Refer to 23 - BODY/DOOR - FRONT/TRIM PANEL - INSTALLATION).

(5) Connect battery negative cable.

RESTRAINTS

TABLE OF CONTENTS

	page
RESTRAINTS	
DESCRIPTION	1
OPERATION	2
WARNING	3
DIAGNOSIS AND TESTING - AIRBAG SYSTEM	4
STANDARD PROCEDURE	
STANDARD PROCEDURE - HANDLING AIRBAGS	4
STANDARD PROCEDURE - SERVICE AFTER AN AIRBAG DEPLOYMENT	5
CLOCK SPRING	
DESCRIPTION	5
OPERATION	6
STANDARD PROCEDURE - CLOCK SPRING CENTERING	6
REMOVAL	6
INSTALLATION	7
DRIVER AIRBAG	
DESCRIPTION	7
OPERATION	8
REMOVAL	8
INSTALLATION	9
DRIVER AIRBAG COVER	
REMOVAL	9
INSTALLATION	10
FRONT SEAT BELT & RETRACTOR	
REMOVAL	11
INSTALLATION	11
FRONT SEAT BELT BUCKLE	
REMOVAL	11
INSTALLATION	11
FRONT SEAT BELT HEIGHT ADJUSTER	
REMOVAL	12
INSTALLATION	12
OCCUPANT RESTRAINT CONTROLLER	
DESCRIPTION	12
OPERATION	12
REMOVAL	13
INSTALLATION	13
PASSENGER AIRBAG	
DESCRIPTION	13
OPERATION	14
REMOVAL	14
INSTALLATION	15
PASSENGER AIRBAG COVER	
REMOVAL	15
INSTALLATION	15
REAR CENTER SEAT BELT & RETRACTOR	
REMOVAL	16
INSTALLATION	16
REAR SEAT BELT & RETRACTOR	
REMOVAL	16
INSTALLATION	16
REAR SEAT BELT BUCKLE	
REMOVAL	16
SEAT AIRBAG	
DESCRIPTION	16
OPERATION	17
REMOVAL	17
INSTALLATION	18
SIDE IMPACT AIRBAG CONTROL MODULE	
DESCRIPTION	19
OPERATION	19
REMOVAL	19
INSTALLATION	20

RESTRAINTS

DESCRIPTION

FRONT AIRBAG SYSTEM

A dual front airbag system (Fig. 1) utilizes driver and passenger airbags. Both the driver and passenger airbags are certified to new federal regulations, which allows them to deploy with less force than prior airbags. The primary occupant restraints in this vehicle are the seat belts, which require active use by the vehicle occupants. The front airbag system is a supplemental passive restraint that was designed and is intended to enhance the protection for the front seat occupants of the vehicle when used in conjunction with the seat belts.

The driver airbag includes an inflatable airbag and an inflator unit behind a trim cover in the hub area of the steering wheel. The passenger airbag includes an inflatable airbag and an inflator unit behind an airbag door in the instrument panel above the glove box.

The dual front airbag system consists of the following components:

- Occupant Restraint Controller (ORC)
- Airbag indicator lamp.
- Clock Spring
- Driver and passenger airbags (including the airbag inflators).

RESTRAINTS (Continued)

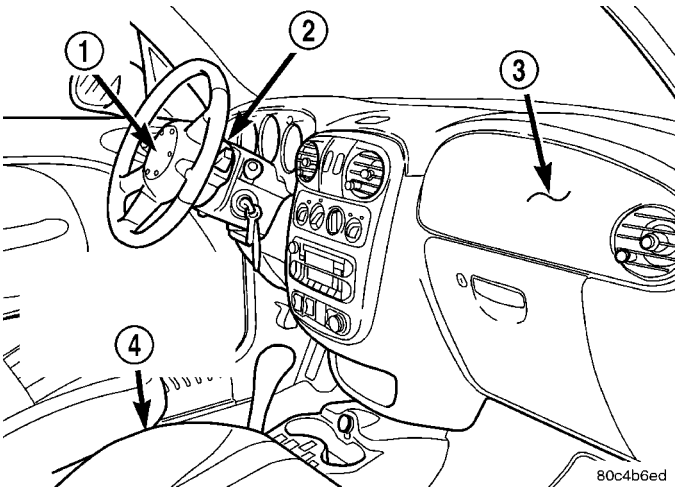

Fig. 1 FRONT AIRBAG SYSTEM COMPONENT LOCATION

1 - DRIVER AIRBAG
2 - CLOCK SPRING
3 - PASSENGER AIRBAG
4 - OCCUPANT RESTRAINT CONTROLLER (ORC)

- Wire harness and connections.

Refer to the proper Body Diagnostic Procedures manual to test or diagnose a problem with any component of the front airbag system.

SIDE IMPACT AIRBAG SYSTEM

The Side Impact Airbag System utilizes two airbags, one mounted to each front seat back frame. This system is designed to enhance protection of occupants in the event of a side impact collision.

BELT TENSIONER SYSTEM

The seat belt system incorporates Tensioner Modules. They are integral to the seat belt retractors (Fig. 2) and cannot be serviced. If found defective they must be replaced.

OPERATION

FRONT AIRBAG SYSTEM

The front airbag system electrical circuits are continuously monitored by a microprocessor and software contained within the Occupant Restraint Controller (ORC). The ORC also contains impact sensing elements, which are monitored by the ORC to determine when an impact occurs that is severe enough to require front airbag system protection. When a frontal impact is severe enough, the ORC initiates the inflator units of both front airbags to deploy.

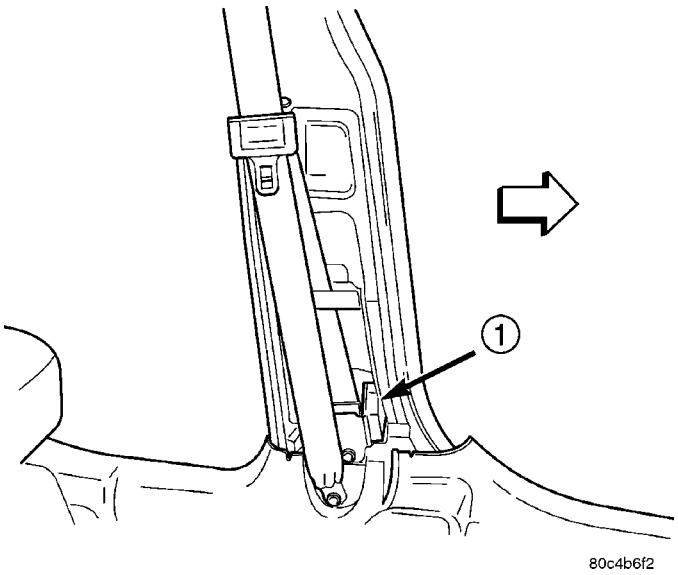

Fig. 2 SEAT BELT TENSIONER LOCATION - TYPICAL

1 - SEAT BELT TENSIONER

An airbag indicator lamp in the instrument cluster lights for six to eight seconds as a bulb test each time the ignition switch is turned to the ON position. Following the bulb test, the airbag indicator lamp is turned ON or OFF by the ORC to indicate the status of the airbag system. If the airbag indicator lamp comes ON at any time other than during the bulb test, it indicates that there is a problem in the airbag system. Such a problem may cause the airbags not to deploy when required, or to deploy when not required.

During a frontal vehicle impact, the knee blockers work in conjunction with properly adjusted seat belts to restrain the driver and front seat passenger in the proper position for an airbag deployment. The knee blockers also work to absorb and distribute the crash energy from the driver and front seat passenger to the structure of the instrument panel. The driver side knee blocker is integral to the lower instrument panel bezel. The passenger side knee blocker is integral to the glove box door.

SIDE IMPACT AIRBAG SYSTEM

The Side Impact Airbag Control Modules (SIACM) control the seat back mounted airbags (one left and one right). If a SIACM determines the impact is severe enough, the appropriate airbag will inflate, tearing open the front seat back trim cover protecting the occupants. Once a seat back mounted airbag has been deployed, the entire seat back as well as any damaged parts must be replaced.

RESTRAINTS (Continued)

BELT TENSIONER SYSTEM

At the onset of an impact event, each tensioner uses a pyrotechnic device which is triggered simultaneously with the airbags to rapidly retract the seat belts. With the slack removed, the occupant's forward motion in an impact will be reduced as will the likelihood of contacting interior components.

WARNING: WHEN THE FRONT AIRBAG IS DEPLOYED, THE TENSIONER WILL HAVE DEPLOYED ALSO, AND MUST BE REPLACED.

The ORC monitors the seat belt tensioner circuit and reports active and stored Diagnostic Trouble Codes (DTC's) if any problem is found.

Once a vehicle has been in an accident, the tensioner will have a "Gravel/Grinding" sound to it after the tensioner has been put into use. This must be replaced along with any deployed airbags and broken or damaged parts.

WARNING

FRONT AIRBAG SYSTEM

WARNING: THIS SYSTEM CONTAINS A SENSITIVE, COMPLEX ELECTRONIC UNIT. DISCONNECT AND ISOLATE THE BATTERY NEGATIVE REMOTE CABLE BEFORE BEGINNING AIRBAG SYSTEM COMPONENT REMOVAL OR INSTALLATION PROCEDURES. THIS WILL DISABLE THE AIRBAG SYSTEM. FAILURE TO DISCONNECT THE BATTERY COULD RESULT IN ACCIDENTAL AIRBAG DEPLOYMENT AND POSSIBLE PERSONAL INJURY.

ALLOW SYSTEM CAPACITOR TO DISCHARGE FOR TWO MINUTES BEFORE REMOVING AIRBAG COMPONENTS.

DO NOT PLACE AN INTACT UNDEPLOYED AIRBAG FACE DOWN ON A SOLID SURFACE, THE AIRBAG WILL PROPEL INTO THE AIR IF ACCIDENTALLY DEPLOYED AND COULD RESULT IN PERSONAL INJURY. WHEN CARRYING OR HANDLING AN UNDEPLOYED AIRBAG, THE TRIM SIDE OF THE AIRBAG SHOULD BE POINTING TOWARD THE BODY TO MINIMIZE POSSIBILITY OF INJURY IF ACCIDENTAL DEPLOYMENT OCCURS.

REPLACE AIRBAG SYSTEM COMPONENTS WITH MOPAR® REPLACEMENT PARTS ONLY. SUBSTITUTE PARTS MAY APPEAR INTERCHANGEABLE, BUT INTERNAL DIFFERENCES MAY RESULT IN INFERIOR OCCUPANT PROTECTION.

WEAR SAFETY GLASSES, RUBBER GLOVES, AND LONG SLEEVED CLOTHING WHEN CLEANING POWDER RESIDUE FROM THE VEHICLE AFTER AN AIRBAG DEPLOYMENT. SODIUM HYDROXIDE POWDER RESIDUE EMITTED FROM A DEPLOYED AIRBAG CAN CAUSE SKIN IRRITATION. FLUSH AFFECTED AREA WITH COOL WATER IF IRRITATION IS EXPERIENCED. IF NASAL OR THROAT IRRITATION IS EXPERIENCED, EXIT THE VEHICLE FOR FRESH AIR UNTIL THE IRRITATION CEASES. IF IRRITATION CONTINUES, SEE A PHYSICIAN.

DO NOT USE A REPLACEMENT AIRBAG THAT IS NOT IN THE ORIGINAL PACKAGING, IMPROPER DEPLOYMENT AND PERSONAL INJURY CAN RESULT.

THE FACTORY INSTALLED FASTENERS, SCREWS AND BOLTS USED TO FASTEN AIRBAG COMPONENTS HAVE A SPECIAL COATING AND ARE SPECIFICALLY DESIGNED FOR THE AIRBAG SYSTEM. DO NOT USE SUBSTITUTE FASTENERS, USE ONLY ORIGINAL EQUIPMENT FASTENERS LISTED IN THE PARTS CATALOG WHEN FASTENER REPLACEMENT IS REQUIRED.

AIRBAGS SHOULD BE STORED IN A COOL, DRY PLACE, AWAY FROM EXCESSIVE HEAT AND STATIC ELECTRICAL ACTIVITY WITH THE FABRIC AIRBAG FACING UP. IF NOT, A PREMATURE DEPLOYMENT CAN RESULT.

NOTE: Please refer to the Hazardous Substance Control System for Proper Disposal. Dispose of deployed air bags in a manner consistent with state, provincial, local, and federal regulations.

RESTRAINTS (Continued)

SIDE IMPACT AIRBAG SYSTEM

WARNING: THE SIDE IMPACT AIRBAG SYSTEM CONTAINS SENSITIVE, COMPLEX ELECTRONIC UNITS. BEFORE ATTEMPTING TO DIAGNOSE OR SERVICE ANY SIDE IMPACT AIRBAG SYSTEM COMPONENTS, YOU MUST FIRST DISCONNECT AND ISOLATE THE BATTERY NEGATIVE (GROUND) CABLE. THIS IS THE ONLY SURE WAY TO DISABLE THE SIDE IMPACT AIRBAG SYSTEM. FAILURE TO DO THIS COULD RESULT IN ACCIDENTAL SIDE IMPACT AIRBAG MODULE DEPLOYMENT AND POSSIBLE PERSONAL INJURY.
ALLOW SYSTEM CAPACITOR TO DISCHARGE FOR TWO MINUTES BEFORE REMOVING AIRBAG COMPONENTS.
DO NOT PLACE A NON-DEPLOYED SIDE AIRBAG FACE DOWN ON A HARD SURFACE, THE AIRBAG WILL PROPEL INTO THE AIR IF ACCIDENTALLY DEPLOYED, AND COULD RESULT IN SERIOUS OR FATAL INJURY.
BEFORE SERVICING A SIDE IMPACT AIRBAG CONTROL MODULE (SIACM), ALWAYS DISCONNECT THE APPROPRIATE (LEFT OR RIGHT) SIDE IMPACT AIRBAG CONNECTOR UNDER THE SEAT TO ENGAGE THE SIDE IMPACT AIRBAG SYSTEM SHORTING BAR TO PREVENT ACCIDENTAL DEPLOYMENT.
DO NOT ATTEMPT TO DISMANTLE A SIDE IMPACT AIRBAG MODULE OR TAMPER WITH ITS INFLATOR. DO NOT PUNCTURE, INCINERATE, OR BRING INTO CONTACT WITH ELECTRICITY. DO NOT STORE AT TEMPERATURES EXCEEDING 93° C (200° F).
REPLACE SIDE IMPACT AIRBAG SYSTEM COMPONENTS ONLY WITH PARTS SPECIFIED IN THE MOPAR PARTS CATALOG. SUBSTITUTE PARTS MAY APPEAR INTERCHANGEABLE, BUT INTERNAL DIFFERENCES MAY RESULT IN INFERIOR OCCUPANT PROTECTION.
THE FASTENERS, SCREWS, AND BOLTS ORIGINALLY USED FOR THE SIDE IMPACT AIRBAG SYSTEM COMPONENTS HAVE SPECIAL COATINGS AND ARE SPECIFICALLY DESIGNED FOR THE SIDE IMPACT AIRBAG SYSTEM. THEY MUST NEVER BE REPLACED WITH ANY SUBSTITUTES. ANY TIME A NEW FASTENER IS NEEDED, REPLACE IT WITH THE CORRECT FASTENERS PROVIDED IN THE SERVICE PACKAGE OR SPECIFIED IN THE MOPAR PARTS CATALOG.

NOTE: Please refer to the Hazardous Substance Control System for Proper Disposal. Dispose of deployed air bags in a manner consistent with state, provincial, local, and federal regulations.

DIAGNOSIS AND TESTING - AIRBAG SYSTEM

(1) With the battery negative remote cable disconnected, connect the DRB III® scan tool to the Data Link connector.

(2) Turn the ignition key to the ON position. Exit vehicle with the scan tool.

(3) After checking that no one is inside the vehicle, connect the battery negative remote terminal.

(4) Read and record the **ACTIVE** Diagnostic Trouble Code (DTC) data.

(5) Read and record any **STORED** DTC's.

(6) Refer to the proper Body Diagnostic Procedures manual if any DTC's are found in Step 4 and Step 5.

(7) If the airbag warning lamp either fails to light, or goes ON and stays ON, there is a system malfunction. To test the airbag warning lamp (bulb) operation in the cluster, refer to Electrical, Instrument Cluster, Diagnosis and Testing - Instrument Cluster. Refer to the proper Body Diagnostic Procedures manual for any other system problems.

STANDARD PROCEDURE

STANDARD PROCEDURE - HANDLING AIRBAGS

DEPLOYED AIRBAG

The vehicle interior may contain a very small amount of sodium hydroxide powder, a by-product of airbag deployment. Sodium hydroxide powder can irritate the skin, eyes, nose and throat. Wear safety glasses, rubber gloves, and long sleeved clothing when cleaning any of the powder residue from the vehicle.

If you find that the cleanup is irritating your skin, run cool water over the affected area. Also, if you experience nasal or throat irritation, exit the vehicle for fresh air until the irritation ceases. If irritation continues, see a physician.

UNDEPLOYED AIRBAG

The airbags must be stored in its original special container until used for service. At no time should a source of electricity be permitted near the inflator on the back of an airbag module. When carrying or handling an undeployed airbag module, the trim side of the airbag should be pointing away from the body to minimize possibility of injury if accidental deployment occurs. Do not place undeployed airbag face down on a solid surface, the airbag will propel into the air if accidental deployment occurs.

RESTRAINTS (Continued)

STANDARD PROCEDURE - SERVICE AFTER AN AIRBAG DEPLOYMENT

DRIVER AIRBAG

After a Driver Airbag has been deployed due to a collision, the following **MUST** be replaced:

- Driver Airbag
- Clock Spring Assembly
- Steering Wheel
- Complete Steering Column Assembly with Lower Steering Column Coupler

All other airbag and vehicle components should be closely inspected following any airbag deployment, and should be replaced when visible damage is incurred.

PASSENGER AIRBAG

After a Passenger Airbag has been deployed due to a collision. the following **MUST** be replaced:

- Passenger Airbag
- Passenger Airbag Cover

All other airbag and vehicle components should be closely inspected following any airbag deployment, and should be replaced when visible damage is incurred.

SEAT AIRBAG

After a Seat Airbag has been deployed due to a collision. the following **MUST** be replaced:

- Complete Seat Back Assembly

All other airbag and vehicle components should be closely inspected following any airbag deployment, and should be replaced when visible damage is incurred.

SEAT BELT TENSIONERS

After a frontal impact where an airbag has been deployed due to a collision. the following **MUST** be replaced:

- Front Seat Belt Retractors (driver and passenger) with integral Tensioners.

All other seat belts should be closely inspected for cuts, tears, fraying, or damage in any way following any frontal impact or airbag deployment. The other seat belts are to be replaced when visible damage is incurred.

CLEAN UP PROCEDURE

Roll or fold the airbag towards its mounting point (i.e. instrument panel, steering wheel, or seat back). Then tape the ripped cover over the deployed airbag.

Use a vacuum cleaner to remove any residual powder from the vehicle interior. Work from the outside in to avoid kneeling or sitting in a contaminated area. Vacuum the heater and A/C outlets as well (Fig. 3). If the heater or air conditioner was in RECIRC mode at time of airbag deployment, operate blower motor on low speed and vacuum powder residue expelled from the heater and A/C outlets. Multiple vacuum cleaning may be necessary to decontaminate the interior of the vehicle.

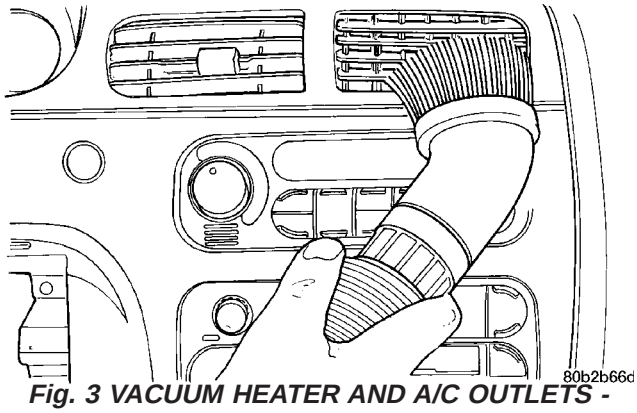

Fig. 3 VACUUM HEATER AND A/C OUTLETS - TYPICAL

CLOCK SPRING

DESCRIPTION

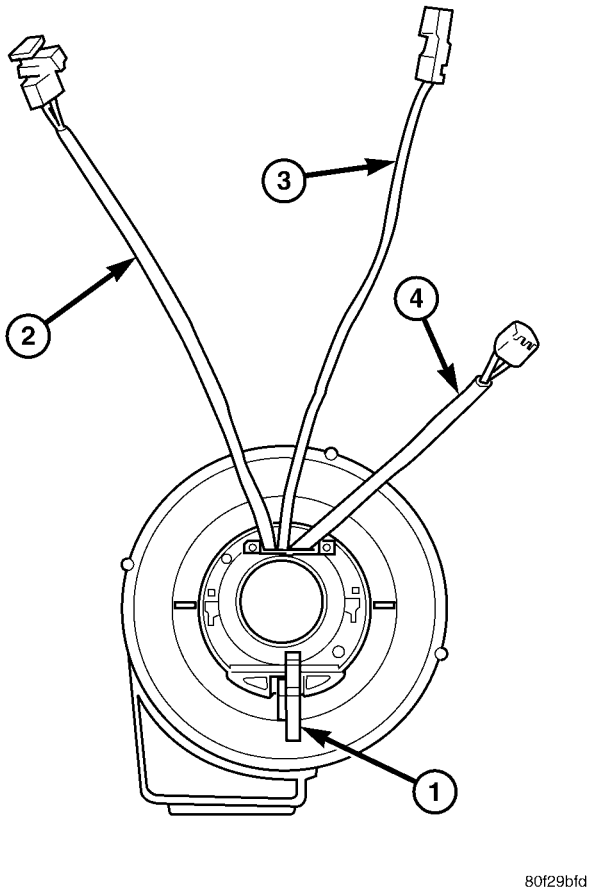

Fig. 4 CLOCK SPRING

1 - LOCKING PIN
2 - DRIVER AIRBAG WIRE/CONNECTOR
3 - HORN WIRE/CONNECTOR
4 - SPEED CONTROL WIRE/CONNECTOR

CLOCK SPRING (Continued)

The clock spring is mounted to the steering column behind the steering wheel (Fig. 4). This assembly consists of a flat, ribbon like, electrically conductive tape that winds and unwinds with the steering wheel rotation. The clock spring is used to maintain a continuous electrical circuit between the wiring harness and the:

- Driver Airbag.
- Speed Control Switch.
- Horn Switch.

OPERATION

The clock spring is used to maintain a continuous electrical circuit between the wiring harness and the driver airbag.

The clock spring must be properly centered when it is installed on the steering column following any service removal, or it will be damaged (Refer to 8 - ELECTRICAL/RESTRAINTS/CLOCK SPRING - STANDARD PROCEDURE).

The clock spring cannot be repaired. If the clock spring is faulty, damaged, or if the airbag has been deployed, the clock spring must be replaced.

STANDARD PROCEDURE - CLOCK SPRING CENTERING

If the rotating tape within the clock spring is not positioned properly with the steering wheel and the front wheels, the clock spring may fail during use. The following procedure **MUST BE USED** to center the clock spring if:

- The clock spring is not known to be properly positioned.
- The front wheels were moved.
- The steering wheel was moved from the half turn (180 degrees) to the right (clockwise) position.

(1) Open hood.

(2) Disconnect and isolate the battery negative cable. Allow system capacitor to discharge for two minutes before beginning.

(3) Remove clock spring (Refer to 8 - ELECTRICAL/RESTRAINTS/CLOCK SPRING - REMOVAL).

(4) Rotate the clock spring rotor in the CLOCKWISE DIRECTION to the end of travel. Do not apply excessive torque.

(5) From the end of travel, rotate the rotor three full turns in the counterclockwise direction. The horn wire and the squib wire should end up at the bottom. If not, rotate the rotor counter clockwise until the wires are properly oriented, but not more than half turn (180 degrees). Engage clock spring locking mechanism.

(6) Install the clock spring (Refer to 8 - ELECTRICAL/RESTRAINTS/CLOCK SPRING - INSTALLATION).

WARNING: DO NOT CONNECT BATTERY NEGATIVE CABLE YET (Refer to 8 - ELECTRICAL/RESTRAINTS - DIAGNOSIS AND TESTING - AIRBAG SYSTEM).

(7) Close hood.

(8) Verify vehicle and system operation.

REMOVAL

(1) Place the front road wheels in the straight ahead position. Then:

- Rotate the steering wheel half turn (180 degrees) to the right (clockwise).
- Lock column with ignition lock cylinder.

(2) Open hood.

(3) Disconnect and isolate the battery negative cable.

(4) Wait two minutes for the system reserve capacitor to discharge before servicing any airbag components.

(5) Remove steering wheel (Refer to 19 - STEERING/COLUMN/STEERING WHEEL - REMOVAL).

(6) Remove upper and lower steering column shrouds to gain access to clock spring wiring (Refer to 19 - STEERING/COLUMN/UPPER SHROUD - REMOVAL).

(7) Remove multi-function switch (Refer to 8 - ELECTRICAL/LAMPS/LIGHTING - EXTERIOR/MULTI-FUNCTION SWITCH - REMOVAL).

(8) Disconnect the 7-way connector between the clock spring and the instrument panel wiring harness at the base of the clock spring.

(9) Remove clock spring by lifting the top latch tab up slightly to guide it over the lock housing (Fig. 5). The clock spring cannot be repaired, and must be replaced if faulty.

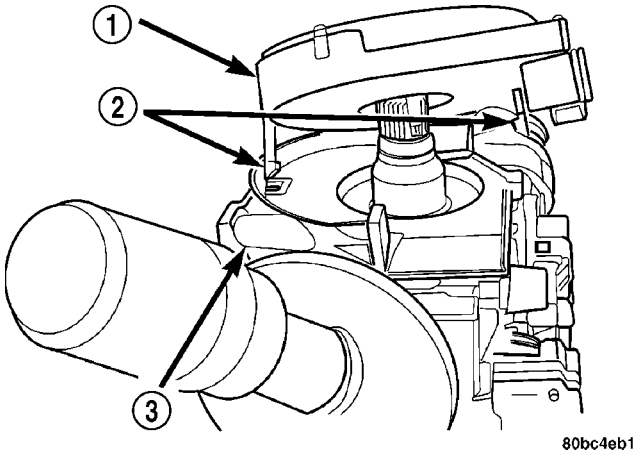

Fig. 5 CLOCK SPRING LATCH HOOKS

1 - CLOCK SPRING
2 - LATCH HOOKS
3 - STEERING COLUMN

(10) Rotate clock spring rotor a half turn (180 degrees) to the left (counter clockwise).

CLOCK SPRING (Continued)

(11) Lock the clock spring rotor in the center position as follows: Insert a paper clip wire through the hole in the rotor at the 10 o'clock position and bend to prevent it from falling out.

INSTALLATION

(1) Confirm that:

- The steering wheel position is a half turn (180 degrees) to the right (clockwise)
- The column is locked with the ignition cylinder lock.
- Check that the turn signal stalk is in the neutral position
- When reusing the clock spring, remove locking wire and rotate clock spring rotor one half turn (180 degrees) to the right (clockwise). Locate the clock spring on the steering shaft and push down on the rotor until the clock spring is fully seated on the steering column (Fig. 5).
- When installing a new clock spring, position the front wheels straight a head. Remove grenade pin.

(2) Connect the clock spring to the instrument panel harness, ensure wiring is properly routed. Then check that the connectors, locking tabs are properly engaged and the halo lamp wire is in position.

(3) Install steering column shrouds (Refer to 19 - STEERING/COLUMN/UPPER SHROUD - INSTALLATION). Be sure all wires are inside of shrouds.

(4) Install steering wheel ensuring the flats on hub align with the clock spring (Refer to 19 - STEERING/COLUMN/STEERING WHEEL - INSTALLATION). Pull the horn, airbag and speed control leads through the larger slot. Ensure leads do not get pinched under the steering wheel.

(5) Route speed control wires under and behind the driver airbag mounting tabs.

(6) Connect the speed control wires to the switch.

(7) Connect the horn lead wire and the driver airbag lead wire to the airbag.

(8) Install the driver airbag.

WARNING: DO NOT CONNECT BATTERY NEGATIVE CABLE YET (Refer to 8 - ELECTRICAL/RESTRAINTS - DIAGNOSIS AND TESTING - AIRBAG SYSTEM).

(9) Close hood.

(10) Verify vehicle and system operation.

DRIVER AIRBAG

DESCRIPTION

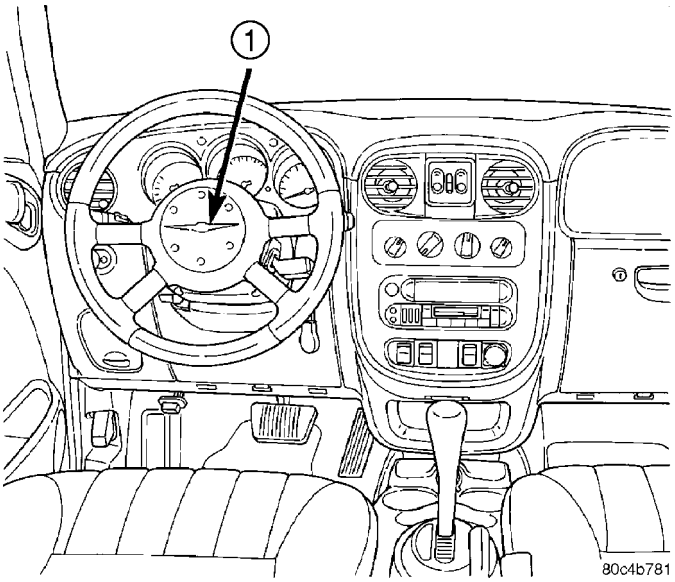

Fig. 6 DRIVER AIRBAG LOCATION

1 - DRIVER AIRBAG

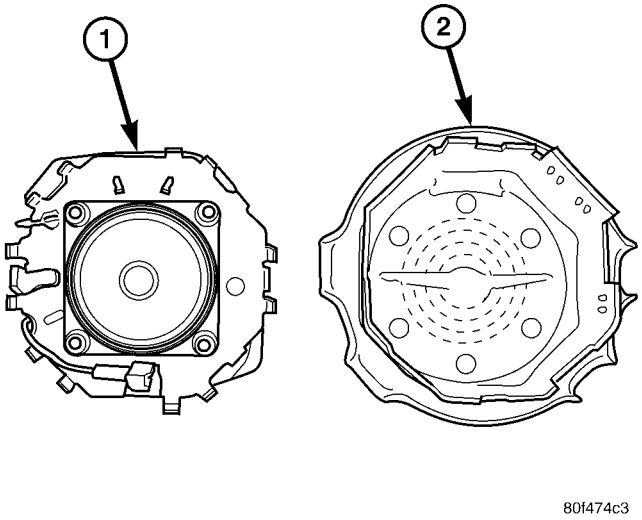

Fig. 7 DRIVER AIRBAG AND COVER

1 - DRIVER AIRBAG
2 - DRIVER AIRBAG COVER

DRIVER AIRBAG (Continued)

The driver airbag protective trim cover is the most visible part of the driver airbag system (Fig. 6). The driver airbag is mounted directly to the steering wheel. Located under the airbag cover are the horn switch, the folded airbag cushion, and the airbag cushion supporting components (Fig. 7). The resistive membrane-type horn switch is secured within a pocket on the airbag cushion.

The driver airbag cannot be repaired and must be replaced if deployed or in any way damaged. The driver airbag cover is available for service replacement if marred, scratched, or disfigured. The horn switch is not serviceable and if found faulty or defective, a complete driver airbag assembly will need to be installed.

OPERATION

The driver airbag includes a stamped metal housing to which the cushion and an inflator unit are attached and sealed. The conventional pyrotechnic-type inflator assembly is mounted to studs on the back of the airbag housing. The inflator seals the hole in the airbag cushion so it can discharge the gas it produces directly into the cushion when supplied with the proper electrical signal. Following an airbag deployment, the airbag cushion quickly deflates by venting this gas towards the instrument panel through the porous fabric material used on the steering wheel side of the airbag cushion.

The protective trim cover is fitted to the front of the airbag and forms a decorative cover in the center of the steering wheel. The inside of the trim cover has locking blocks molded into it that engage a lip on the airbag metal housing. Two stamped metal retainers then fit over the inflator mounting studs on the back of the airbag housing and are engaged in slots on the inside of the cover, securely locking the trim cover into place. The trim cover will split at predetermined breakout lines, then fold back out of the way along with the horn switch and tray unit upon airbag deployment.

REMOVAL

(1) Open hood.

(2) Disconnect and isolate the battery negative cable.

(3) Wait two minutes for the system reserve capacitor to discharge before servicing any airbag components.

(4) Remove upper and lower steering column shrouds to gain access to clock spring wiring (Refer to 19 - STEERING/COLUMN/UPPER SHROUD - REMOVAL).

(5) Using a pair of 90° internal snap ring pliers or equivalent, pry open the retaining clip (Fig. 8) on the back of the steering wheel to release the retaining pin (Fig. 9). Pull or press rearward on the driver airbag while doing this. The pin will release slightly.

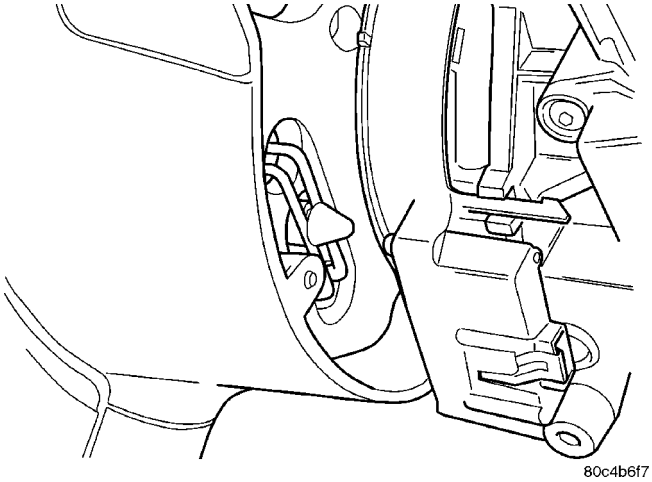

Fig. 8 DRIVER AIRBAG RETAINING PIN

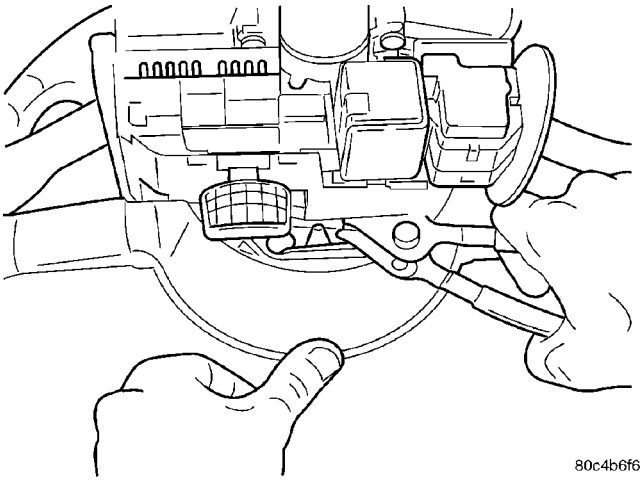

Fig. 9 FIRST DRIVER AIRBAG RETAINING PIN - REMOVAL

(6) Using a pair of 90° internal snap ring pliers or equivalent, pry open the retaining clip (Fig. 10), and at the same time gently pry the pin away from the retaining clip, using a pocket screwdriver or equivalent, so it can slide through the middle of the clip. Use the screwdriver to push the pin through the clip.

(7) When the driver airbag releases from the steering wheel, peel rearward and expose the underside of the airbag. Disconnect the two harness connectors, squib and horn feed (Fig. 11) and (Fig. 12). Use a small pocket screwdriver to separate horn connector. Insert into the bottom of the connector (airbag side) and pull handle of screwdriver up while pulling out on the clock spring side of the connector.

(8) Remove airbag from vehicle.

DRIVER AIRBAG (Continued)

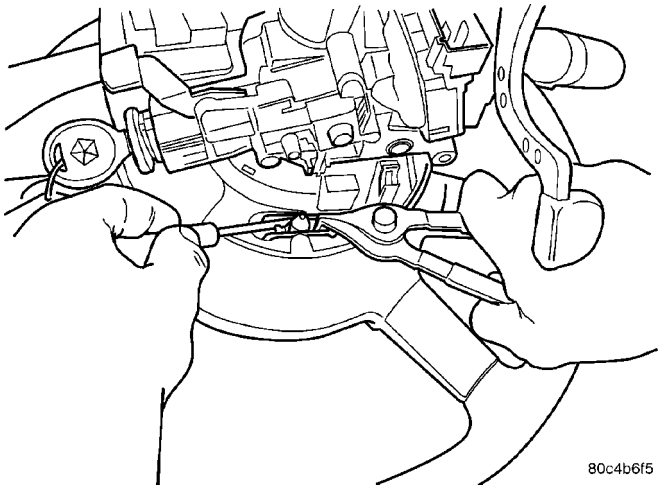

Fig. 10 SECOND DRIVER AIRBAG RETAINING PIN - REMOVAL

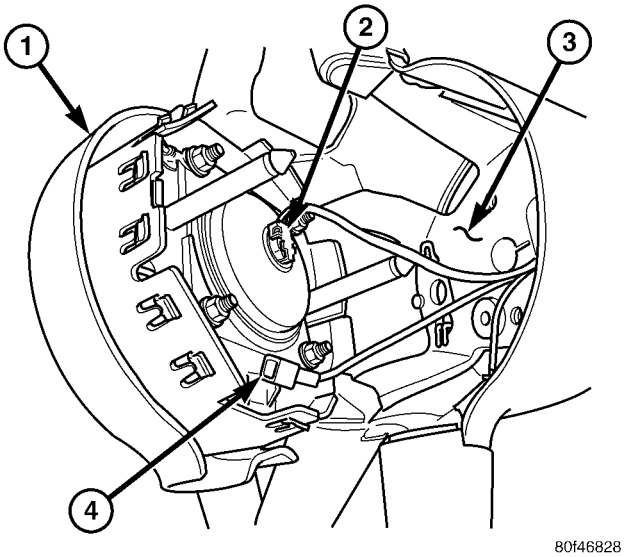

Fig. 11 DRIVER AIRBAG ELECTRICAL CONNECTORS

1 - DRIVER AIRBAG
2 - DRIVER AIRBAG SQUIB CONNECTOR
3 - STEERING WHEEL
4 - HORN CONNECTOR

WARNING: WHEN REPLACING A DEPLOYED DRIVER AIRBAG, THE CLOCK SPRING MUST ALSO BE REPLACED (Refer to 8 - ELECTRICAL/RESTRAINTS/CLOCK SPRING - REMOVAL).

INSTALLATION

NOTE: Before installation, inspect the rear of the steering wheel for presence of driver airbag retaining clips anti-rattle foam pads. If any of them are damaged or missing, replace them as necessary.

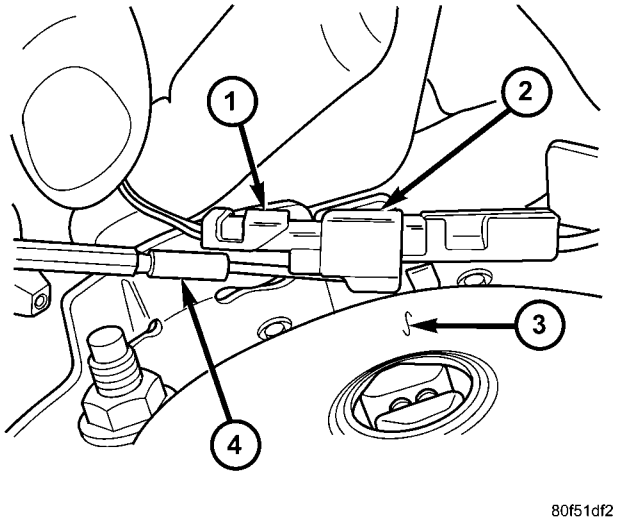

Fig. 12 DRIVER AIRBAG HORN CONNECTOR

1 - WIRE FROM CLOCK SPRING
2 - WIRE TO HORN SWITCH
3 - DRIVER AIRBAG IGNITER
4 - SMALL SCREWDRIVER

(1) Connect the squib wire to the driver airbag. Make airbag connection by pressing straight in on the connector. The connector should be fully seated. Feel for positive snap to assure positive connection.

(2) Connect the horn wire.

(3) **Rotate the steering wheel 90° left or right.**

(4) Place driver airbag into position and firmly snap both pins into place. **Listen for the audible click at each pin. Visually check that both pins are properly seated between the legs of the clips.**

(5) Install steering column shrouds (Refer to 19 - STEERING/COLUMN/UPPER SHROUD - INSTALLATION). Be sure all wires are inside of shrouds.

WARNING: DO NOT CONNECT BATTERY NEGATIVE CABLE YET (Refer to 8 - ELECTRICAL/RESTRAINTS - DIAGNOSIS AND TESTING - AIRBAG SYSTEM).

(6) Close hood.

(7) Verify vehicle and system operation.

DRIVER AIRBAG COVER

REMOVAL

(1) Open hood.

(2) Disconnect and isolate the battery negative cable.

(3) Wait two minutes for the system reserve capacitor to discharge before servicing any airbag components.

DRIVER AIRBAG COVER (Continued)

(4) Remove the driver airbag (Refer to 8 - ELECTRICAL/RESTRAINTS/DRIVER AIRBAG - REMOVAL).

(5) With driver airbag removed, pick a corner and push down on the inflator or latch hook mounting plate until the latch hooks push out of the driver airbag cover (Fig. 13). On two of the latch hook locations, there is a tab on top of the latch hooks that retains the DAB. Before pushing down on the latch hook plate, pull up on the DAB mounting pins and push a small screwdriver between the tab and the DAB cover. Then continue with normal removal.

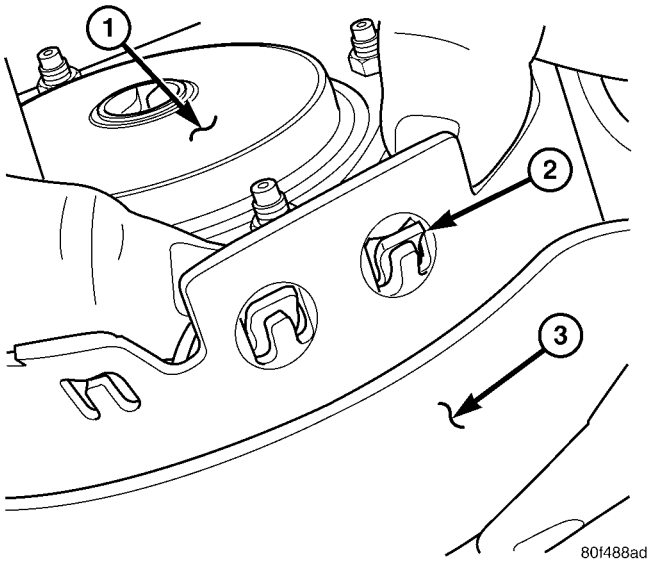

Fig. 13 UNLATCH DRIVER AIRBAG COVER

1 - INFLATOR OR LATCH HOOK MOUNTING PLATE
2 - LATCH HOOK
3 - DRIVER AIRBAG COVER

(6) Remove driver airbag from driver airbag cover (Fig. 14).

INSTALLATION

(1) Place driver airbag into new driver airbag cover. Be careful not to pinch airbag cushion between latch hook mounting plate and cover.

(2) Push down on the latch hook mounting plate and guide the latch hooks into the slots on the driver airbag cover.

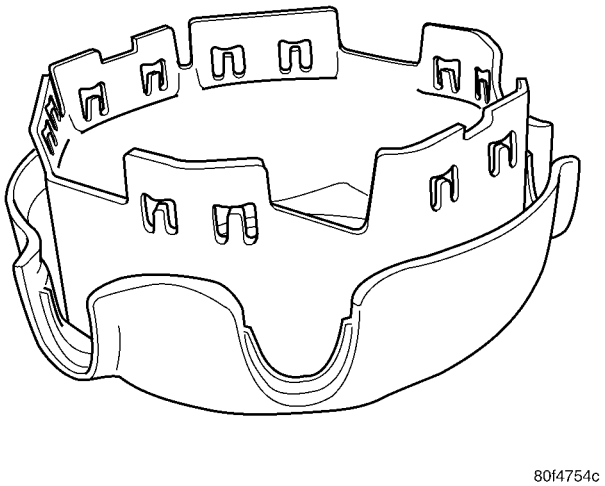

Fig. 14 DRIVER AIRBAG COVER

(3) Once all the latch hooks have been started, pull the driver airbag cover away from the driver airbag to fully seat the latch hooks (Fig. 15).

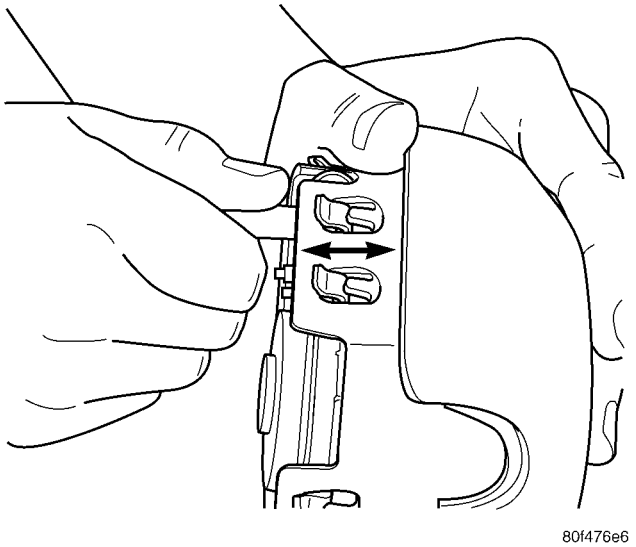

Fig. 15 SECURE DRIVER AIRBAG COVER LATCH HOOKS

(4) Install the driver airbag (Refer to 8 - ELECTRICAL/RESTRAINTS/DRIVER AIRBAG - INSTALLATION).

FRONT SEAT BELT & RETRACTOR

REMOVAL

WARNING: FRONT SEAT BELT ASSEMBLIES MUST BE REPLACED AFTER A COLLISION.

(1) Disconnect and isolate the battery negative cable.
(2) Wait two minutes for the system reserve capacitor to discharge before servicing any airbag components.
(3) Remove plastic turning loop cover.
(4) Remove shoulder belt height control knob.
(5) Remove bolt attaching turning loop to belt adjuster.
(6) Remove upper B-pillar trim (Refer to 23 - BODY/INTERIOR/B-PILLAR TRIM - REMOVAL).
(7) Remove access cover from B-pillar trim.
(8) Remove anchor bolt from lower B-pillar.
(9) Disengage clips attaching trim to B-pillar.
(10) Feed seat belt turning loop and seat belt through trim panel.
(11) Disconnect electrical connector.
(12) Remove the webbing mid guide two screws.
(13) Remove lower B-pillar trim from vehicle.
(14) Remove front seat belt retractor.

INSTALLATION

WARNING: FRONT SEAT BELT ASSEMBLIES MUST BE REPLACED AFTER A COLLISION.

NOTE: Tighten all seat belt bolts to 40 N·m (30 ft. lbs.) torque.

(1) Place front seat belt retractor into position.
(2) Position lower B-pillar trim panel near B-pillar (Refer to 23 - BODY/INTERIOR/B-PILLAR TRIM - INSTALLATION).
(3) Install the two screws to the webbing mid guide.
(4) Connect electrical connector.
(5) Feed seat belt turning loop and seat belt through trim panel.
(6) Align locating pins on backside of trim panel to mating holes in B-pillar.
(7) Push clips on trim panel into slots in B-pillar.
(8) Install access cover to B-pillar trim.
(9) Install bolt attaching lower seat belt anchor to floor pan kick-up.
(10) Install bolt attaching turning loop to belt adjuster.
(11) Move height adjuster to the lowest position.
(12) Install upper B-pillar trim.
(13) Install shoulder belt height control knob.
(14) Install the plastic turning loop cover.

WARNING: DO NOT CONNECT BATTERY NEGATIVE CABLE YET (Refer to 8 - ELECTRICAL/RESTRAINTS - DIAGNOSIS AND TESTING - AIRBAG SYSTEM).

FRONT SEAT BELT BUCKLE

REMOVAL

WARNING: FRONT SEAT BELT ASSEMBLIES MUST BE REPLACED AFTER A COLLISION.

(1) Remove center console (Refer to 23 - BODY/INTERIOR/CENTER CONSOLE - REMOVAL).
(2) Remove front seat cushion side shield two retaining screws.
(3) Remove bolt attaching seat belt buckle to seat.
(4) Remove seat belt buckle from seat.

INSTALLATION

WARNING: FRONT SEAT BELT ASSEMBLIES MUST BE REPLACED AFTER A COLLISION.

(1) Place seat belt buckle in position on seat anchor.
(2) Install bolt attaching seat belt buckle to seat. Tighten seat belt anchor bolt to 40 N·m (30 ft. lbs.) torque.
(3) Install front seat cushion side shield two screws.
(4) Install the center console (Refer to 23 - BODY/INTERIOR/CENTER CONSOLE - INSTALLATION).

FRONT SEAT BELT HEIGHT ADJUSTER

REMOVAL

WARNING: FRONT SEAT BELT ASSEMBLIES MUST BE REPLACED AFTER A COLLISION.

(1) Remove B-pillar trim (Refer to 23 - BODY/INTERIOR/B-PILLAR TRIM - REMOVAL).
(2) Remove the two bolts attaching front seat belt height adjuster to B-pillar (Fig. 16).
(3) Remove front seat belt height adjuster from vehicle.

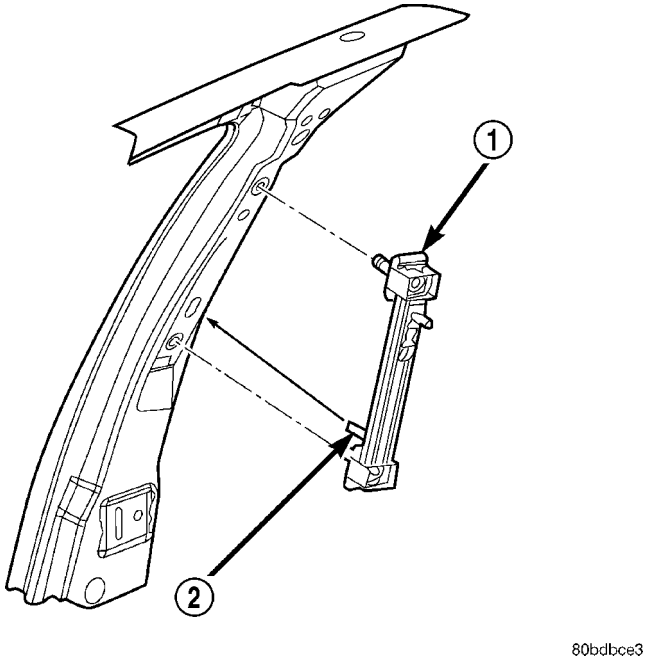

Fig. 16 FRONT SEAT BELT HEIGHT ADJUSTER

1 - FRONT SEAT BELT HEIGHT ADJUSTER
2 - TAB IS ON BOTTOM

INSTALLATION

WARNING: FRONT SEAT BELT ASSEMBLIES MUST BE REPLACED AFTER A COLLISION.

NOTE: Front seat belt height adjuster must be in the lowest position when Installing adjuster knob.

(1) Place into position the front seat belt height adjuster.
(2) Install bolts attaching the front seat belt height adjuster to B-pillar. Tighten all seat belt bolts to 40 N·m (30 ft. lbs.) torque.
(3) Install B-pillar trim (Refer to 23 - BODY/INTERIOR/B-PILLAR TRIM - INSTALLATION).

OCCUPANT RESTRAINT CONTROLLER

DESCRIPTION

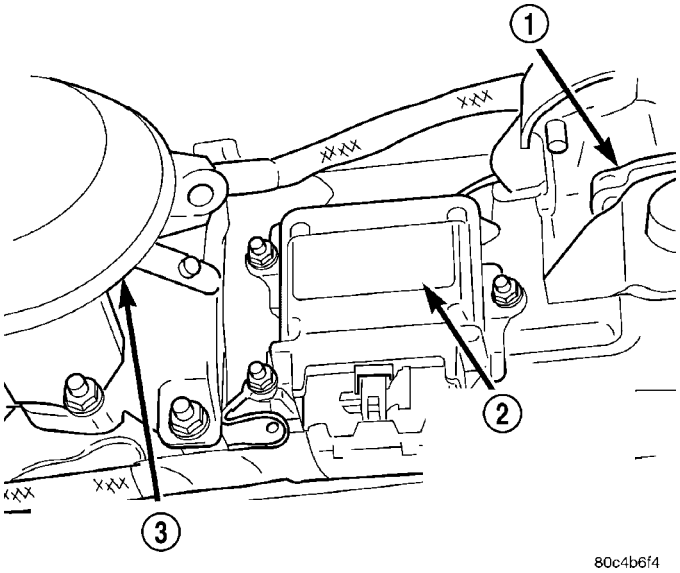

Fig. 17 OCCUPANT RESTRAINT CONTROLLER LOCATION

1 - PARKING BRAKE
2 - OCCUPANT RESTRAINT CONTROLLER
3 - CONSOLE GEAR SELECTOR

The Occupant Restraint Controller (ORC) is also sometimes referred to as the Airbag Control Module (ACM). The ORC is mounted on the tunnel floor pan, between the transmission shifter and parking brake (Fig. 17).

The ORC contains a microprocessor, the impact sensing device, and energy storage capacitors. The microprocessor contains the airbag system logic. The airbag system logic includes On-Board Diagnostics (OBD) capability, and communicates with the instrument cluster circuitry on the Programmable Communication Interface (PCI) data bus to control the airbag indicator lamp.

OPERATION

The impact sensing device is located inside the ORC. The sensing device provides crash severity discrimination and confirmation of a crash. The ORC monitors the system to determine the system readiness. The ORC contains on-board diagnostics (OBD), and will illuminate the AIRBAG warning lamp on the cluster when a fault occurs. The warning indicator is illuminated for six to eight seconds every time the vehicle is started.

OCCUPANT RESTRAINT CONTROLLER (Continued)

The microprocessor in the ORC monitors internal components and the airbag system electrical circuits to determine the system readiness. If the ORC detects a monitored system fault, it sends messages to the instrument cluster over the PCI data bus to turn ON the airbag warning lamp. A decision algorithm in the ORC microprocessor determines when the deceleration rate is severe enough to require airbag system protection. When the appropriate conditions are met, the ORC sends an electrical signal to deploy the frontal airbags. The impact sensing device is an accelerometer that senses deceleration, which provides verification of the severity of an impact. The ORC is calibrated for the specific vehicle, and is only serviced as a unit. The ORC also contains an energy-storage capacitor. The purpose of the capacitor is to provide airbag system protection if the impact has damaged or disconnected the battery. The ORC cannot be repaired or adjusted, and if damaged or faulty, must be replaced.

REMOVAL

(1) Open hood.
(2) Disconnect and isolate the battery negative cable.
(3) Wait two minutes for the system reserve capacitor to discharge before servicing any airbag components.
(4) Remove the center console (Refer to 23 - BODY/INTERIOR/CENTER CONSOLE - REMOVAL).
(5) Remove ORC module mounting nuts and ground eyelet, then remove module (Fig. 18).

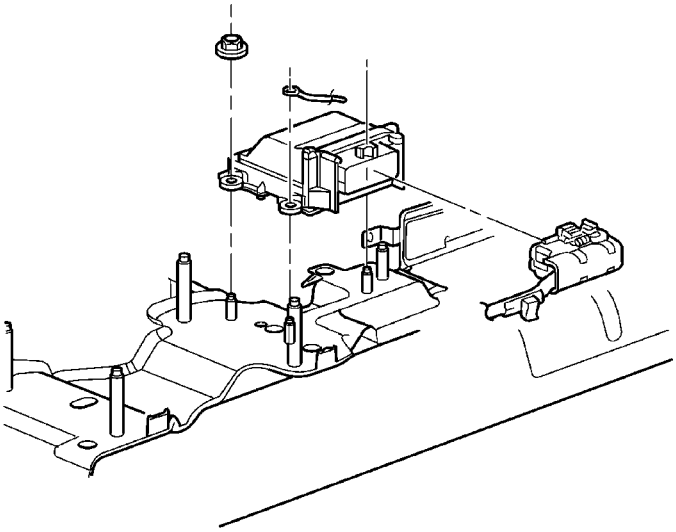

Fig. 18 OCCUPANT RESTRAINT CONTROLLER - REMOVE/INSTALL

(6) Disconnect ORC 23-way connector.
(7) Remove ORC from vehicle.

INSTALLATION

(1) Connect ORC connector and ensure that the connector and all locking tabs are engaged.

CAUTION: USE SUPPLIED NUTS ONLY

(2) Position ORC (arrow pointing forward) in the console floor bracket (Fig. 18), replace ground eyelet, and attach the nuts and tighten to 9.6 to 14 N·m (85 to 125 in. lbs.) torque.

NOTE: Place the ground eyelet over the front (towards the front of the vehicle) weld stud when reattaching the ORC.

(3) Install center console assembly (Refer to 23 - BODY/INTERIOR/CENTER CONSOLE - INSTALLATION).

WARNING: DO NOT CONNECT BATTERY NEGATIVE CABLE YET (Refer to 8 - ELECTRICAL/RESTRAINTS - DIAGNOSIS AND TESTING - AIRBAG SYSTEM).

(4) Close hood.
(5) Verify vehicle and system operation.

PASSENGER AIRBAG

DESCRIPTION

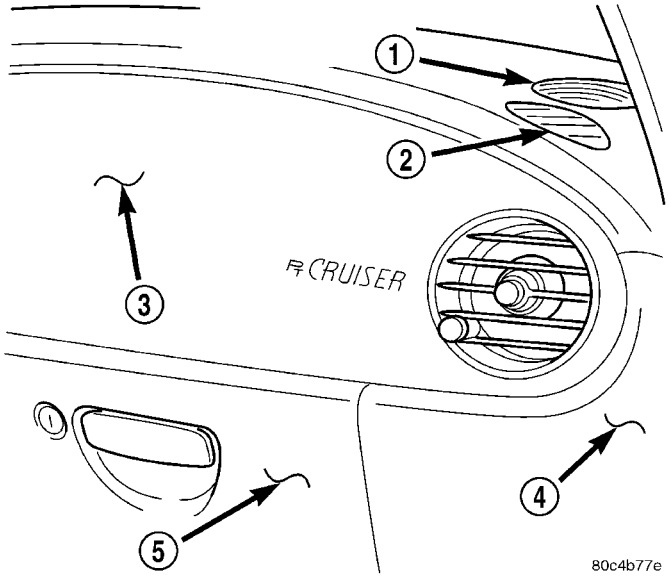

Fig. 19 PASSENGER AIRBAG LOCATION

1 - INSTRUMENT PANEL SPEAKER
2 - SIDE WINDOW DEMISTER
3 - PASSENGER AIRBAG
4 - RIGHT INSTRUMENT PANEL END COVER
5 - GLOVE BOX ASSEMBLY

PASSENGER AIRBAG (Continued)

The passenger airbag is located behind the passenger airbag cover, between the glove box and instrument panel top cover (Fig. 19).

The passenger airbag includes a stamped steel housing within which the cushion and inflator are mounted and sealed. Two stamped metal brackets, one on each end of the housing, enclose the cushion and inflator. The mounting scheme consists of two weld studs and a bracket with two tabs off the bottom of the housing.

Following a passenger airbag deployment, the passenger airbag and the passenger airbag cover must be replaced. If inspection reveals that the passenger airbag mounting points on the instrument panel structural duct have been cracked or damaged, the instrument panel assembly must also be replaced. The passenger airbag cannot be repaired, and must be replaced if deployed or in any way damaged.

OPERATION

The hybrid-type inflator assembly includes a small canister of highly compressed argon gas. The inflator seals the hole in the airbag cushion so it can discharge the gas it produces directly into the cushion when supplied with the proper electrical signal. Following an airbag deployment, the airbag cushion quickly deflates by venting this gas through the porous fabric material used on each end panel of the airbag cushion.

The passenger airbag is secured with screws to the instrument panel structural duct beneath the instrument panel top pad and above the glove box opening.

REMOVAL

NON-DEPLOYED AIRBAG

(1) Open hood.

(2) Disconnect and isolate the battery negative cable.

(3) Wait two minutes for the system reserve capacitor to discharge before servicing any airbag components.

(4) Remove instrument panel top cover (Refer to 23 - BODY/INSTRUMENT PANEL/INSTRUMENT PANEL TOP COVER - REMOVAL).

(5) Open glove box, push in on the box/bin sides and lower to floor.

(6) Remove the right instrument panel end cap.

(7) Remove four passenger airbag cover screws along the bottom end of the airbag cover.

(8) Remove two passenger airbag cover screws along the top edge of the airbag cover.

(9) Remove two nuts retaining passenger airbag to instrument panel assembly inside glove box opening (Fig. 20).

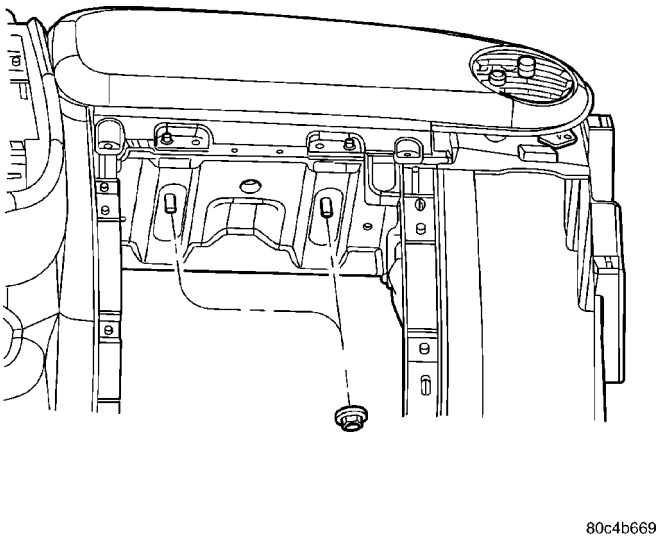

Fig. 20 PASSENGER AIRBAG RETAINING NUTS

(10) Lift airbag up until the wire connector is visible and disconnect the wire connector from airbag. Unlock the locking tab (Fig. 21) and release the connector (Fig. 22).

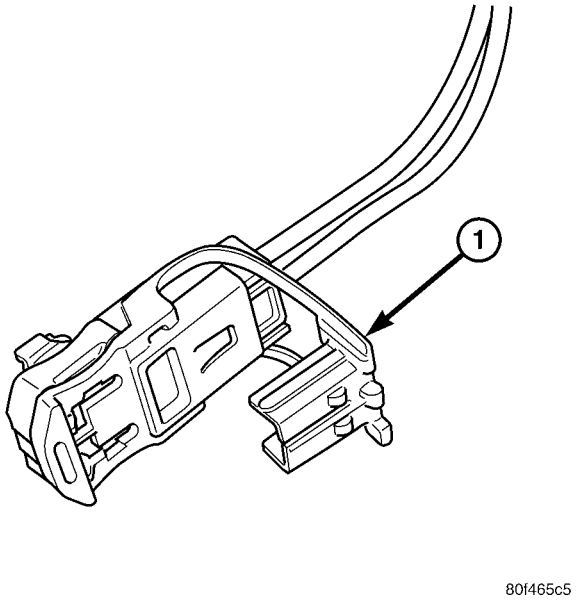

Fig. 21 ELECTRICAL CONNECTOR LOCK

1 - LOCKING TAB

(11) Remove passenger airbag from vehicle.

DEPLOYED AIRBAG

(1) Open hood.

(2) Disconnect and isolate the battery negative cable.

(3) Roll/fold airbag towards instrument panel.

PASSENGER AIRBAG (Continued)

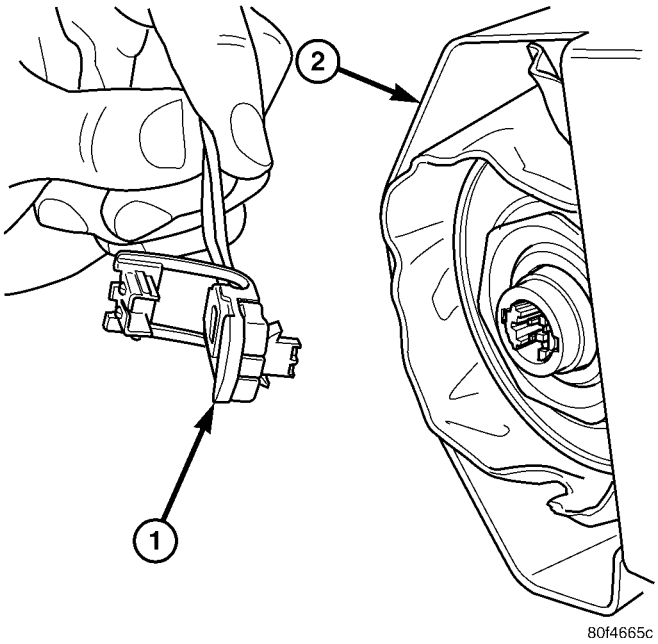

Fig. 22 PASSENGER AIRBAG ELECTRICAL CONNECTOR

1 - ELECTRICAL CONNECTOR
2 - PASSENGER AIRBAG

(4) Close door over folded airbag and tape door closed.

(5) Remove instrument panel top cover (Refer to 23 - BODY/INSTRUMENT PANEL/INSTRUMENT PANEL TOP COVER - REMOVAL).

(6) Open glove box, push in on the box/bin sides and lower to floor.

(7) Remove the right instrument panel end cap.

(8) Remove four passenger airbag cover screws along the bottom end of the airbag cover.

(9) Remove two passenger airbag cover screws along the top edge of the airbag cover.

(10) Remove two nuts retaining passenger airbag to instrument panel assembly inside glove box opening (Fig. 20).

(11) Lift airbag up until the wire connector is visible and disconnect the wire connector from airbag. Unlock the locking tab and release the connector (Fig. 22).

(12) Remove passenger airbag from vehicle.

INSTALLATION

(1) Place airbag into instrument panel opening, connect the 4-way wire connector, and lock the red locking tab (Fig. 22).

(2) Install the two nuts retaining passenger airbag to instrument panel assembly inside glove box opening (Fig. 20). Torque the two airbag retaining nuts to 22 to 34 N·m (200 to 300 in. lbs.) torque.

(3) Install two passenger airbag cover screws along the top edge of the airbag cover. Torque trim screws to 2 N·m (20 in. lbs.).

(4) Install four passenger airbag cover screws along the bottom end of the airbag cover. Torque trim screws to 2 N·m (20 in. lbs.).

(5) Install the right instrument panel end cap.

(6) Push in on the box/bin sides and close glove box door.

(7) Install instrument panel top cover (Refer to 23 - BODY/INSTRUMENT PANEL/INSTRUMENT PANEL TOP COVER - INSTALLATION).

WARNING: DO NOT CONNECT BATTERY NEGATIVE CABLE YET (Refer to 8 - ELECTRICAL/RESTRAINTS - DIAGNOSIS AND TESTING - AIRBAG SYSTEM).

(8) Close hood.

(9) Verify vehicle and system operation.

PASSENGER AIRBAG COVER

REMOVAL

(1) Open hood.

(2) Disconnect and isolate the battery negative cable.

(3) Wait two minutes for the system reserve capacitor to discharge before servicing any airbag components.

(4) Remove the passenger airbag from the vehicle (Refer to 8 - ELECTRICAL/RESTRAINTS/PASSENGER AIRBAG - REMOVAL).

(5) Unsnap cover from passenger airbag and remove by lifting the airbag cover up towards the hinge.

(6) Reach in under the cover and push down on the metal flap running the length of the top of the airbag housing.

(7) Maneuver airbag cover out of the airbag housing.

INSTALLATION

If reinstalling the airbag cover onto the same passenger airbag, perform the following adjustment. Otherwise, go to Step 1.

- Using a 90° needle nose pliers or equivalent, place the pliers on the rear edge of the airbag cover metal flap retainer.
- Bend roughly 10° so that the metal flap is closed slightly to eliminate rattles of the airbag cover.
- Bend until the measurement of the metal flap to airbag housing is 7 - 8.3 mm (use a drill bit ranging from 9/32 - 21/64 inch).

(1) Snap cover onto the passenger airbag frame.

PASSENGER AIRBAG COVER (Continued)

(2) Install the passenger airbag (Refer to 8 - ELECTRICAL/RESTRAINTS/PASSENGER AIRBAG - INSTALLATION).

WARNING: DO NOT CONNECT BATTERY NEGATIVE CABLE YET (Refer to 8 - ELECTRICAL/RESTRAINTS - DIAGNOSIS AND TESTING - AIRBAG SYSTEM).

(3) Close hood.
(4) Verify vehicle and system operation.

REAR CENTER SEAT BELT & RETRACTOR

REMOVAL

(1) Detach Quick Connect Anchor by depressing tab.
(2) Remove seat bezel.
(3) De-trim seat back upper (Refer to 23 - BODY/SEATS/SEAT BACK COVER - REMOVAL).
(4) Lock seat back latch.
(5) Disconnect Locking Cable from retractor.
(6) Remove retractor bolt.
(7) Feed webbing and hardware through seat frame and remove retractor.

INSTALLATION

(1) Feed webbing and hardware through seat frame and install retractor.
(2) Install retractor bolt and tighten to 40 N·m (30 ft. lbs.).
(3) Connect locking cable to retractor.
(4) Unlock seat back latch.
(5) Re-trim rear seat back cover (Refer to 23 - BODY/SEATS/SEAT BACK COVER - INSTALLATION).
(6) Install seat bezel.
(7) Attach Quick Connect Anchor.

REAR SEAT BELT & RETRACTOR

REMOVAL

(1) Remove turning loop cover.
(2) Remove turning loop bolt.
(3) Remove upper and lower trim bezels.
(4) Remove trim panel from body (Refer to 23 - BODY/INTERIOR/LEFT QUARTER TRIM PANEL - REMOVAL).
(5) Remove lower seat belt anchor bolt.
(6) Feed seat belt and hardware through trim openings.
(7) Unbolt and remove the retractor and belt assembly.

INSTALLATION

(1) Place rear seat belt retractor into position.
(2) Install bolt attaching retractor. Tighten the retractor belt bolt to 40 N·m (30 ft. lbs.) torque.
(3) Feed seat belt and hardware through trim opening.
(4) Install lower seat belt anchor bolt. Tighten to 40 N·m (30 ft. lbs.).
(5) Install trim panel (Refer to 23 - BODY/INTERIOR/LEFT QUARTER TRIM PANEL - INSTALLATION).
(6) Install upper and lower trim bezels.
(7) Install turning loop bolts.
(8) Install turning loop cover.

REAR SEAT BELT BUCKLE

REMOVAL

The rear seat belt buckles are riveted to the rear seat lower pivot. To service the rear seat belt buckles, the entire pivot assembly needs to be replaced.

SEAT AIRBAG

DESCRIPTION

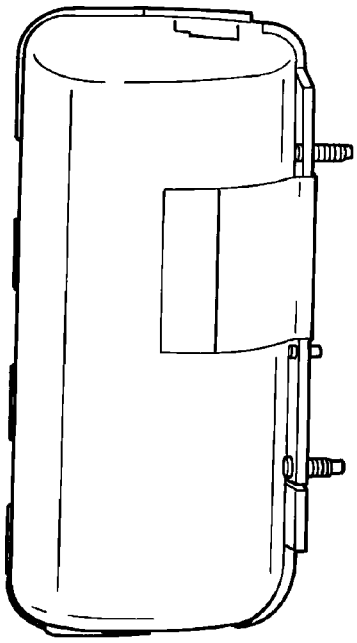

Fig. 23 SEAT AIRBAG - TYPICAL

SEAT AIRBAG (Continued)

The left and right seat airbags (Fig. 23) are located in the outboard end of the front seat backs. The airbag contains a bag, an inflator (small canister of highly compressed gas), and a mounting bracket. The seat airbag cannot be repaired and must be replaced, with the entire seat back assembly, if deployed or in any way damaged.

OPERATION

When supplied with the proper electrical signal, the inflator seals the hole in the airbag cushion so it can discharge the compressed gas it contains directly into the cushion. Upon deployment, the seat back trim cover will tear open and allow the seat airbag to fully deploy between the seat and the door.

REMOVAL

DEPLOYED SEAT AIRBAG

WARNING: DO NOT REPLACE A DEPLOYED SEAT AIRBAG. IF THE SEAT AIRBAG HAS BEEN DEPLOYED, THE ENTIRE SEAT BACK AND ALL DAMAGED PARTS MUST BE REPLACED.

If the seat airbag was deployed, the entire seat back must be replaced (Refer to 23 - BODY/SEATS/SEAT BACK - REMOVAL).

NONDEPLOYED SEAT AIRBAG

WARNING: ONLY REPLACE A NONDEPLOYED SEAT AIRBAG IF FAULTY OR DEFECTIVE.

(1) Position the front seat in the full forward position.

(2) Open hood.

(3) Disconnect and isolate the battery negative cable (Fig. 24).

(4) Wait two minutes for the system reserve capacitor to discharge before servicing any airbag components.

(5) Remove front seat from vehicle (Refer to 23 - BODY/SEATS/SEAT - REMOVAL).

(6) Remove plastic back panel from the seat back (Fig. 25).

(7) Disengage seat back trim cover J-strap from the upper, lower and airbag side of seat back.

(8) Disconnect the seat airbag electrical connector (Fig. 26). Slide the yellow locking tab down to unlock. Then with two fingers, push two side retaining tabs in and pull connector straight from module.

(9) Remove the seat airbag retaining nuts.

(10) Grasp the upper airbag side of the seat back trim cover and pull trim cover and cushion over top of seat back frame. This will allow room to remove seat airbag without damaging trim cover or cushion.

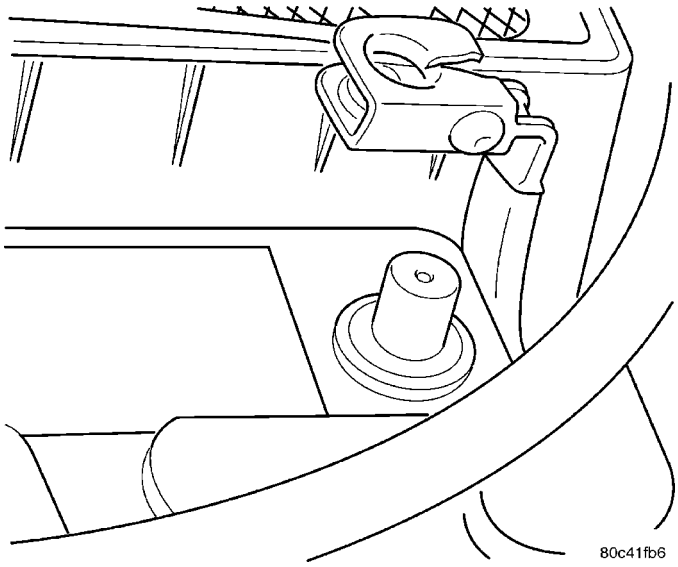

Fig. 24 BATTERY NEGATIVE CABLE - REMOVE/INSTALL

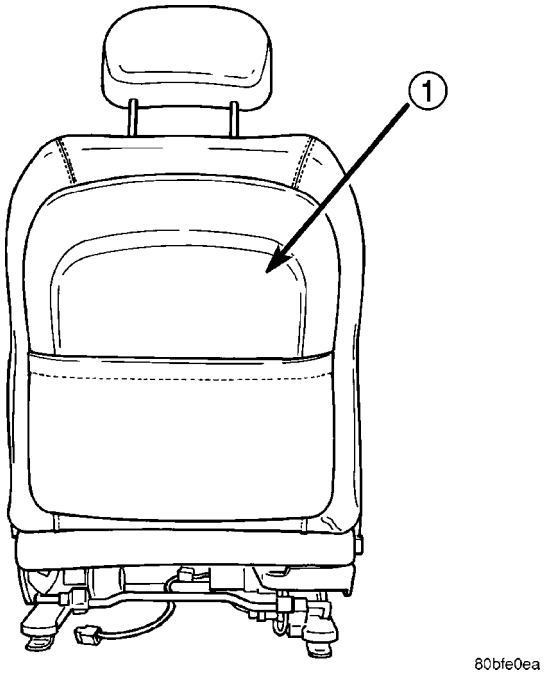

Fig. 25 FRONT SEAT BACK REAR PANEL

1 - FRONT SEAT BACK REAR PANEL

(11) Working between seat back trim cover/cushion and frame carefully unhook seat airbag studs from nylon sleeve and slide airbag out of sleeve. Be careful not to tear nylon sleeve as this will affect function of airbag system.

CAUTION: Be certain not to tear the seat airbag nylon sleeve during removal.

SEAT AIRBAG (Continued)

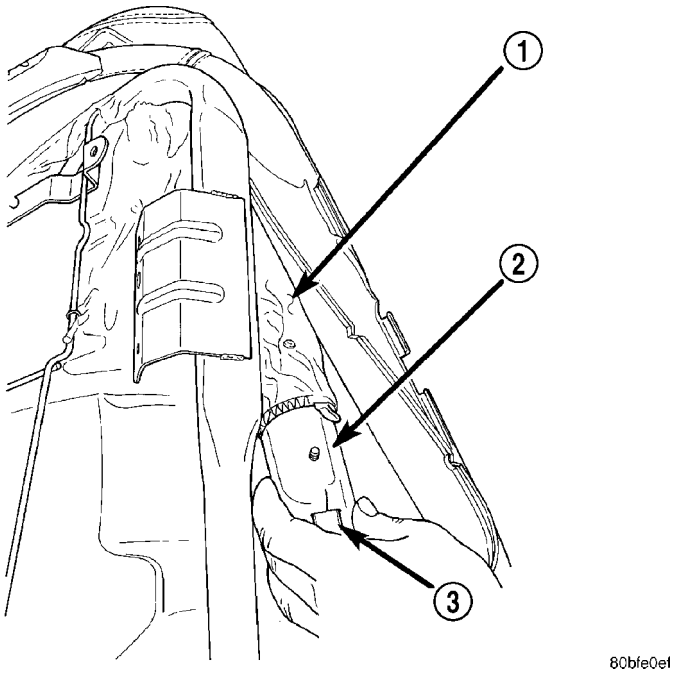

Fig. 26 SEAT AIRBAG ELECTRICAL CONNECTOR

1 - SEAT AIRBAG NYLON SLEEVE
2 - SEAT AIRBAG
3 - SEAT AIRBAG ELECTRICAL CONNECTOR

INSTALLATION

DEPLOYED SEAT AIRBAG

WARNING: DO NOT REPLACE A DEPLOYED SEAT AIRBAG. IF THE SEAT AIRBAG HAS BEEN DEPLOYED, THE ENTIRE SEAT BACK AND ALL DAMAGED PARTS MUST BE REPLACED.

If the seat airbag was deployed, the entire seat back must be replaced (Refer to 23 - BODY/SEATS/SEAT BACK - INSTALLATION).

NONDEPLOYED SEAT AIRBAG

WARNING: ONLY REPLACE A NONDEPLOYED SEAT AIRBAG IF FAULTY OR DEFECTIVE.

NOTE: The seat airbag connector must face down (toward seat cushion) after installation.

(1) Carefully slide the side airbag in nylon sleeve until mounting studs line up with holes provided in nylon sleeve. Be careful not to tear nylon sleeve as this will affect function of airbag system.

CAUTION: The side airbag must be inside the nylon sleeve before installing retaining nuts. Failure to do so will adversely affect the function of the side impact airbag system.

(2) Pull seat airbag and nylon sleeve assembly up to line up mounting studs with holes provided in seat back frame mounting bracket (Fig. 27). Install the seat airbag retaining nuts. Torque to 10.7 N·m (94.7 in. lbs.).

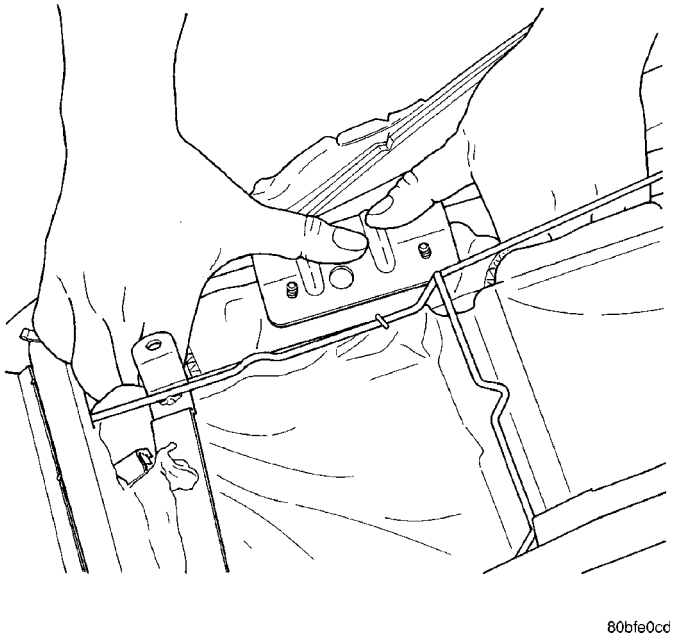

Fig. 27 INSTALLING SIDE AIRBAG INTO SEAT BACK

(3) Position the upper seat back trim cover and cushion over seat back frame.

(4) Connect the seat airbag electrical connector. After initial connector is installed be certain the yellow locking tab is in the upper “locked” position. Check to be certain connector cannot be removed once yellow locking tab is positioned.

(5) Position seat back trim cover and install seat back trim cover J-straps on the upper, lower and airbag side of seat back frame.

(6) Install the plastic back panel on the seat back (Fig. 25). Install four screws in the upper mounting location of the back cover.

CAUTION: Be certain plastic back panel is securely installed on the seat back. Failure to do so will adversely affect the side impact airbag system.

(7) Install the front seat in vehicle (Refer to 23 - BODY/SEATS/SEAT - INSTALLATION).

WARNING: DO NOT CONNECT BATTERY NEGATIVE CABLE YET (Refer to 8 - ELECTRICAL/RESTRAINTS - DIAGNOSIS AND TESTING - AIRBAG SYSTEM).

(8) Close hood.
(9) Verify vehicle and system operation.

SIDE IMPACT AIRBAG CONTROL MODULE

DESCRIPTION

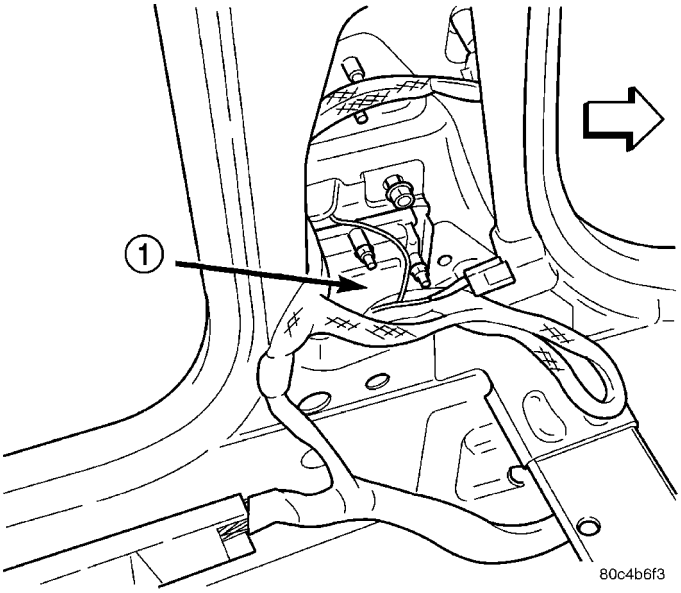

Fig. 28 SIDE IMPACT AIRBAG CONTROL MODULE LOCATION - TYPICAL

1 - SIDE IMPACT AIRBAG CONTROL MODULE

Vehicles equipped with seat airbags use two Side Impact Airbag Control Modules (SIACM) (Fig. 28). One is located on each side of the vehicle within the body B-pillar.

OPERATION

Each Side Impact Airbag Control Modules (SIACM) serves as the impact sensor for its seat mounted airbag. The right side SIACM controls the right seat airbag. The left side SIACM controls the left seat airbag. Each SIACM contains two accelerometers, both accelerometers must agree in order to deploy the seat airbag. In the event of a side impact, the appropriate SIACM will send an electronic signal to its airbag, deploying the airbag. The SIACM communicates with the Occupant Restraint Controller (ORC) via the PCI data bus circuit.

The SIACM perform self-diagnostics and circuit tests to determine if the system is functioning properly. If the test finds a problem, the SIACM will set both active and stored Diagnostic Trouble Codes (DTC's). If a DTC is active, the SIACM will request that the airbag warning lamp be turned on. The results of the system test are transmitted on the PCI data bus circuit to the ORC once each second, or on a change in lamp state (ON/OFF). If the warning lamp status message from either SIACM contains a lamp ON request, the ORC will set an active DTC. At the same time as the DTC is set, the ORC sends a PCI data bus message to the cluster requesting the airbag warning lamp to be turned ON. Observe all ORC WARNING and CAUTION statements (Refer to 8 - ELECTRICAL/RESTRAINTS - WARNING) when servicing or handling the SIACM. The SIACM's are not serviceable and must be replaced even if they are dropped.

REMOVAL

The removal and installation of the driver and passenger side modules is identical. The orientation of the modules is the only difference (which way they are tilted).

WARNING: THE MODULES CANNOT BE INTERCHANGED. THEY ARE UNIQUE TO EACH SIDE.

(1) Open hood.

(2) Disconnect and isolate the battery negative cable.

(3) Wait two minutes for the system reserve capacitor to discharge before servicing any airbag components.

(4) Remove the lower seat trim. Locate the connector for the seat airbag which is under the seat on the outboard side, attached to the seat frame. Disconnect the harness side of the connector. **This is to engage the shorting clips to disable the side impact airbag system.**

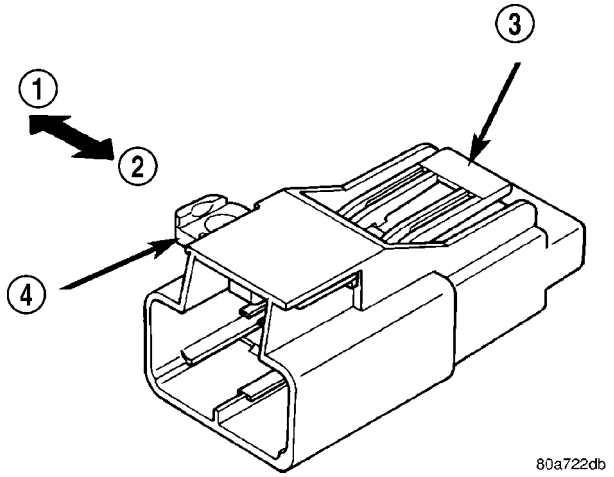

Fig. 29 SIDE AIRBAG IMPACT CONTROL MODULE CONNECTOR

1 - UNLOCK
2 - LOCK
3 - PRESS LOCK
4 - RED LOCKING TAB

(5) Remove the lower B-pillar trim from the appropriate side of the vehicle (Refer to 23 - BODY/INTERIOR/B-PILLAR TRIM - REMOVAL).

SIDE IMPACT AIRBAG CONTROL MODULE (Continued)

(6) Remove the seat belt retractor (Refer to 8 - ELECTRICAL/RESTRAINTS/FRONT SEAT BELT & RETRACTOR - REMOVAL).

WARNING: DO NOT REMOVE SIACM FROM THE MOUNTING BRACKET. THIS IS SERVICED WITH THE BRACKET AND A NEW ONE WILL COME WITH THE REPLACEMENT SIACM.

(7) Remove the SIACM retaining nuts and ground eyelet (Fig. 28).
(8) Pull SIACM out of B-pillar (Fig. 28).
(9) Disconnect the SIACM electrical connector (Fig. 29).
(10) Remove the SIACM from the vehicle.

INSTALLATION

The installation of the driver and passenger side modules is identical. The orientation of the modules is the only difference (which way they are tilted).

WARNING: THE MODULES CANNOT BE INTERCHANGED. THEY ARE UNIQUE TO EACH SIDE.

(1) Connect the SIACM electrical connector (Fig. 29).

NOTE: Place the ground eyelet over the TOP REAR (towards the rear of the vehicle) weld stud when reattaching the SIACM. This location prevents the eyelet from spinning during tightening.

(2) Position the SIACM in the b-pillar (Fig. 28), replace ground eyelet, and install the retaining nuts. Torque the nuts to 20 N·m (175 ± 25 in. lbs.).
(3) Install the seat belt retractor (Refer to 8 - ELECTRICAL/RESTRAINTS/FRONT SEAT BELT & RETRACTOR - INSTALLATION).
(4) Install the lower B-pillar trim (Refer to 23 - BODY/INTERIOR/B-PILLAR TRIM - INSTALLATION).
(5) Connect the harness side of the connector. Install the lower seat trim.

WARNING: DO NOT CONNECT BATTERY NEGATIVE CABLE YET (Refer to 8 - ELECTRICAL/RESTRAINTS - DIAGNOSIS AND TESTING - AIRBAG SYSTEM).

(6) Close hood.
(7) Verify vehicle and system operation.

SPEED CONTROL

TABLE OF CONTENTS

	page
SPEED CONTROL	
DESCRIPTION	1
OPERATION	
OPERATION	2
OPERATION - INTERACTIVE SPEED CONTROL (4 Speed EATX Only)	2
OPERATION - CHECKING FOR DIAGNOSTIC CODES	3
DIAGNOSIS AND TESTING - ROAD TEST	3
CABLE	
DESCRIPTION	4
OPERATION	4
REMOVAL	
REMOVAL	4
REMOVAL - 2.4L TURBO	5
INSTALLATION	
INSTALLATION	5
INSTALLATION - 2.4L TURBO	6
SERVO	
DESCRIPTION	6
OPERATION	7
REMOVAL	
REMOVAL	7
REMOVAL - 2.4L TURBO	7
INSTALLATION	
INSTALLATION	8
INSTALLATION - 2.4L TURBO	8
SWITCH	
REMOVAL	8
INSTALLATION	8
VACUUM RESERVOIR	
DESCRIPTION	9
OPERATION	9
REMOVAL	9
INSTALLATION	10

SPEED CONTROL

DESCRIPTION

The speed control system is electronically controlled and vacuum operated. The electronic control is integrated into the Powertrain Control Module, located on the left side of the engine compartment next to the air cleaner. The controls are located on the steering wheel and consist of a single switch. The ON, OFF, RESUME, ACCEL, SET, COAST, and CANCEL, lever is located on the right of the steering wheel (Fig. 1). For identification and location of the major components (Fig. 2).

The system is designed to operate at speeds above 25 mph (40 km/h).

WARNING: THE USE OF SPEED CONTROL IS NOT RECOMMENDED WHEN DRIVING CONDITIONS DO NOT PERMIT MAINTAINING A CONSTANT SPEED, SUCH AS IN HEAVY TRAFFIC OR ON ROADS THAT ARE WINDING, ICY, SNOW COVERED, OR SLIPPERY.

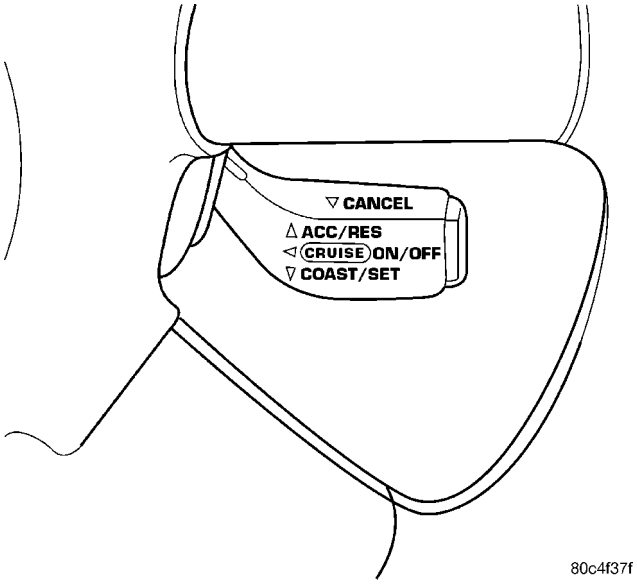

Fig. 1 Speed Control Switch

SPEED CONTROL (Continued)

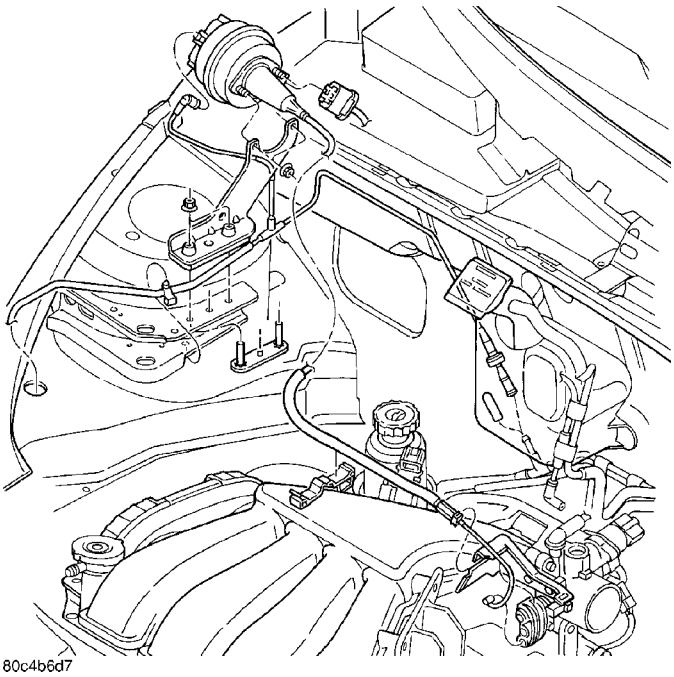

Fig. 2 Speed Control System

OPERATION

OPERATION

When speed control is activated by depressing the ON switch, the PCM allows a set speed to be stored in RAM for speed control. To store a set speed, depress and release the SET switch while the vehicle is moving at a speed between 30 and 85 mph. In order for the speed control to engage, the brakes cannot be applied, nor can the gear selector be indicating the transmission is in Park or Neutral (ATX) or 1st/2nd gear (MTX). The speed control can be disengaged manually by:

- Stepping on the brake pedal
- Depressing the OFF switch
- Depressing the CANCEL switch.
- Depressing the clutch pedal
- Operating in 1st or 2nd gear (autostick, if equipped)

NOTE: Turning the system off by depressing the OFF switch or turning off the ignition switch will erase the set speed stored in the PCM.

For added safety, the speed control system is programmed to disengage for any of the following conditions:

- An indication of Park or Neutral
- A rapid increase rpm (indicates that the clutch has been disengaged)
- Excessive engine rpm (indicates that the transmission may be in a low gear)
- The speed signal increases at a rate of 10 mph per second (indicates that the co-efficient of friction between the road surface and tires is extremely low)
- The speed signal decreases at a rate of 10 mph per second (indicates that the vehicle may have decelerated at an extremely high rate)
- If the actual speed is greater than 20 mph over the set speed.
- Autostick shifts into 1st or 2nd gear (autostick, if equipped)

Once the speed control has been disengaged, depressing the RESUME switch when speed is greater than 20 mph allows the vehicle to resume control to the target speed that was stored in the PCM.

While the speed control is engaged, the driver can increase the vehicle speed by depressing the ACCEL switch. The new target speed is stored in the PCM when the ACCEL switch is released. The PCM also has a ″tap-up″ feature in which target speed increases by 2 mph for each momentary switch activation of the ACCEL switch. The PCM also provides a means to decelerate to a new lower target speed without disengaging speed control. Depress and hold the COAST switch until the desired speed is reached, then release the switch.

The PCM also has a “Tap Down” feature in which target speed decreases at 1 mph for each momentary switch activation of the coast switch.

OPERATION - INTERACTIVE SPEED CONTROL (4 Speed EATX Only)

Interactive means that communication between the PCM and the TCM is taking place, this communication is internal to the PCM on NGC vehicles. Interactive speed control avoids unnecessary shifting for smoother, quieter operation and when downshifts are required, makes the shifts smoother.

CLIMBING A GRADE

DESCRIPTION

When climbing a grade the interactive speed control tries to maintain the set speed by increasing the throttle opening, while inhibiting/delaying downshifts.

OPERATION

If opening the throttle alone cannot maintain the set speed and the vehicle speed drops more than three mph below the set speed, the transmission will downshift to third gear. If the vehicle continues to lose speed, by more than 6 mph, the transmission will downshift again to maintain the set speed. After the vehicle encounters a less-steep grade, or has crested the grade (reduced the load on the power-

SPEED CONTROL (Continued)

train) and can maintain the set speed at a reduced throttle position, the transmission will upshift, as appropriate, until the set speed can be maintained in Overdrive.

GRADE HUNTING

DESCRIPTION

All vehicles equipped with a four speed automatic transmission have a grade hunting feature for the 2nd to 3rd gear upshift and the 3rd to Overdrive upshift.

OPERATION

The TCM (on SBEC vehicles) (PCM on NGC vehicles) identifies the powertrain loading conditions and selects the proper gear to maintain the current vehicle speed. Under moderate loading conditions the transaxle will stay in 3rd gear until the top of the grade is reached or the powertrain loading is reduced.

If powertrain loading is severe, the transaxle may shift into 2nd gear and remain there until powertrain loading is reduced, then a 2nd to 3rd gear upshift will be scheduled. Grade hunting features always operate regardless of whether or not the interactive speed control is engaged. **If the interactive speed control is not engaged and powertrain loading is not reduced, the driver may have to completely lift off of the throttle before an upshift will occur**. If the driver does lift off the throttle to induce an upshift under these conditions, vehicle speed will reduce and the Overdrive to 3rd and 3rd to 2nd gear downshifts will reoccur when the throttle is reapplied. If grade hunting is repeatedly induced by the driver, transaxle damage may result.

AUTOMATIC SPEED CONTROL OVERSPEED REDUCTION

DESCRIPTION

Transmission control software includes an automatic speed control overspeed reduction feature. This maintains vehicle speed at the selected set point when descending a grade.

OPERATION

The TCM (on SBEC vehicles) (PCM on NGC vehicles) first senses that the speed control is set. If the set speed is exceeded by more than 4 mph (6.5 km/hr) and the throttle is closed, the TCM (on SBEC vehicles) (PCM on NGC vehicles) causes the transaxle to downshift to THIRD gear. After downshifting, the automatic speed control resumes normal operation. To ensure that an upshift is appropriate after the set speed is reached, the TCM (on SBEC vehicles) (PCM on NGC vehicles) waits until the speed control system opens the throttle at least 6 degrees before upshifting to OVERDRIVE again.

If the driver applies the brakes, canceling automatic speed control operation with the transaxle still in THIRD gear, the TCM (on SBEC vehicles) (PCM on NGC vehicles) maintains this gear until the driver opens the throttle at least 6 degrees to avoid an inappropriate upshift. The upshift is also delayed for 2.5 seconds after reaching the 6 degrees throttle opening in anticipation that the driver might open the throttle enough to require THIRD gear. This will avoid unnecessary and disturbing transmission cycling. If the automatic speed control RESUME feature is used after braking, the upshift is delayed until the set speed is achieved to reduce cycling and provide better response.

OPERATION - CHECKING FOR DIAGNOSTIC CODES

When trying to verify a speed control system electronic malfunction: Connect a DRB scan tool if available to the data link connector. The connector is located near the steering column, and at lower edge of the dash panel.

A speed control malfunction may occur without a diagnostic code being indicated. For further information and usage of the DRB scan tool and a more complete list of Diagnostic Trouble Code and No Trouble Codes, refer to the Powertrain Diagnostic Manual.

DIAGNOSIS AND TESTING - ROAD TEST

Perform a vehicle road test to verify reports of speed control system malfunction. The road test should include attention to the speedometer. Speedometer operation should be smooth and without flutter at all speeds.

Flutter in the speedometer indicates a problem which might cause surging in the speed control system. The cause of any speedometer problems should be corrected before proceeding. Refer to the Instrument Cluster for speedometer diagnosis.

If a road test verifies an inoperative system, and the speedometer operates properly, check for:

- A Diagnostic Trouble Code (DTC). If a DTC exists, conduct tests per the Powertrain Diagnostic Procedures manual.
- A misadjusted brake (stop) lamp switch. This could also cause an intermittent problem.
- Loose or corroded electrical connections at the servo. Corrosion should be removed from electrical terminals and a light coating of Mopar Multipurpose Grease, or equivalent, applied.
- Leaking vacuum reservoir.
- Loose or leaking vacuum hoses or connections.
- Defective one-way vacuum check valve.

SPEED CONTROL (Continued)

- Secure attachment at both ends of the speed control servo cable.
- Smooth operation of throttle linkage and throttle body air valve.
- Conduct electrical test at PCM.
- Failed speed control servo. Do the servo vacuum test.

CAUTION: When test probing for voltage or continuity at electrical connectors, care must be taken not to damage connector, terminals or seals. If these components are damaged, intermittent or complete system failure may occur.

CABLE

DESCRIPTION

The speed control servo cable is connected between the speed control vacuum servo diaphragm and the throttle body control linkage.

OPERATION

This cable causes the throttle control linkage to open or close the throttle valve in response to movement of the vacuum servo diaphragm.

REMOVAL

REMOVAL

(1) Remove the air cleaner lid, and makeup air hose.

(2) Remove the negative battery cable.

(3) Remove the engine cover and throttle control shield, if equipped.

(4) Remove two nuts attaching speed control cable and mounting bracket to servo (Fig. 6).

(5) Remove servo from the mounting bracket.

(6) Disconnect electrical connectors and vacuum hose.

(7) Remove retaining clip holding cable to servo (Fig. 3).

(8) Remove throttle cable clasp from the throttle body cam (Fig. 4).

(9) Remove speed control cable from throttle cam by sliding clasp out hole used for throttle cable.

(10) Compress the retaining tabs on the cables and slide cables out of bracket (Fig. 5).

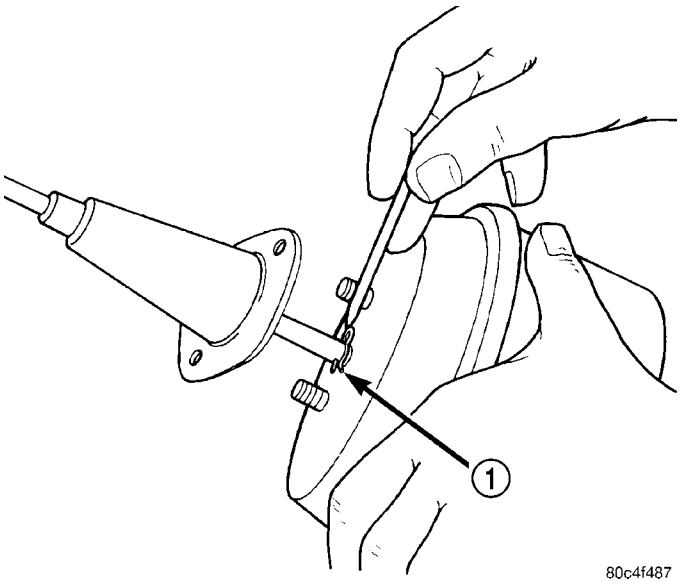

Fig. 3 Cable Clip

1 - HAIRPIN CLIP

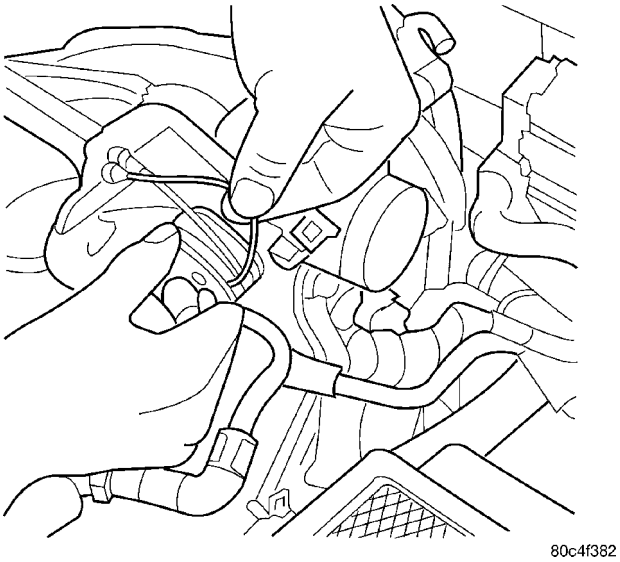

Fig. 4 Throttle Cable and Speed Control Cable

CABLE (Continued)

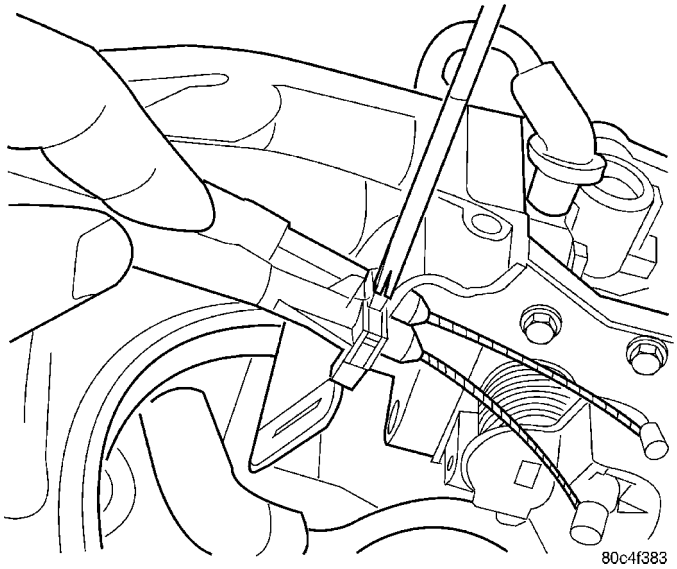

Fig. 5 Retaining Tabs

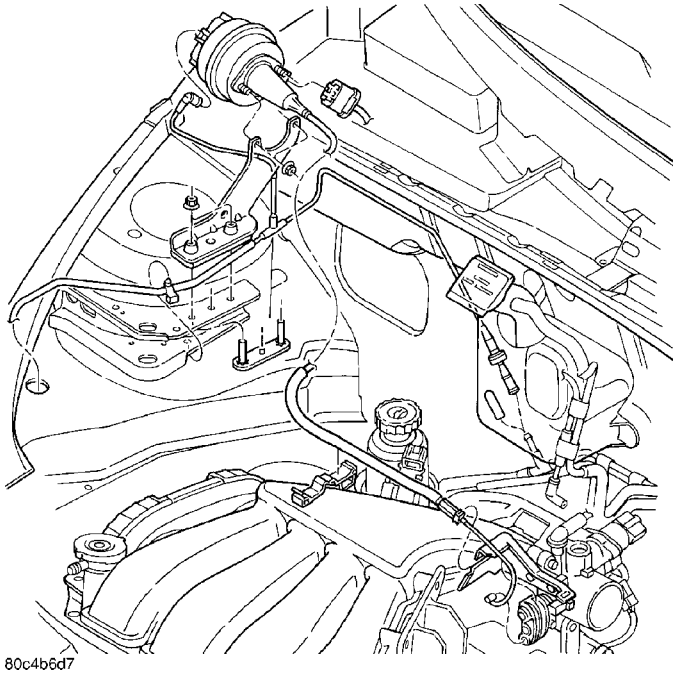

Fig. 6 Speed Control System

REMOVAL - 2.4L TURBO

(1) Disconnect the negative battery cable.

(2) Remove the throttle control shield (Fig. 7).

(3) Remove the speed control cable from the throttle body lever.

(4) Remove from throttle cable bracket by compressing the retaining tabs on the cable and slide cable out of the bracket (Fig. 8).

(5) Remove the vacuum line from the speed control servo (Fig. 9).

(6) Remove the 2 nuts from the speed control servo studs (Fig. 10).

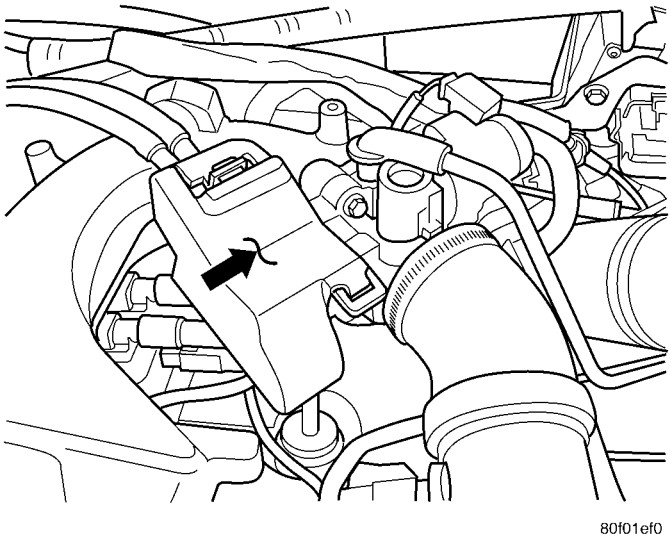

Fig. 7 THROTTLE CONTROL SHIELD

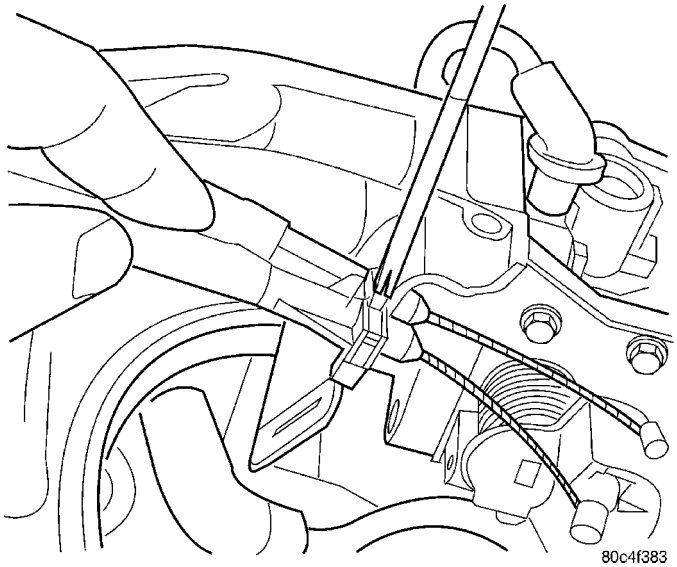

Fig. 8 Retaining Tabs

(7) Push and pull up the speed control servo from the mounting bracket.

(8) Unlock and disconnect the electrical connector from the speed control servo (Fig. 9).

(9) Remove the 2 push clips and discard.

(10) Remove the retaining clip holding cable to servo (Fig. 11).

(11) Remove the cable.

INSTALLATION

INSTALLATION

(1) Install cable core wire through center hole on bracket, onto servo center post.

(2) Install retaining clip to cable at servo (Fig. 3).

CABLE (Continued)

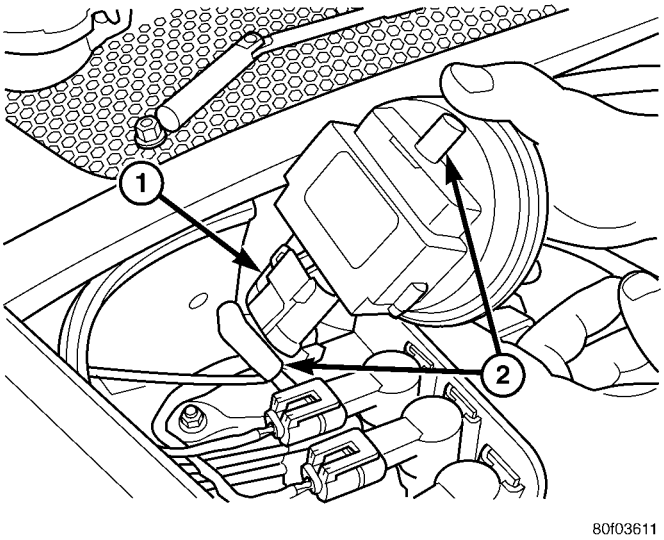

Fig. 9 VACUUM AND ELECTRICAL CONNECTION

1 - Electrical Connector
2 - Vacuum Line and Nipple

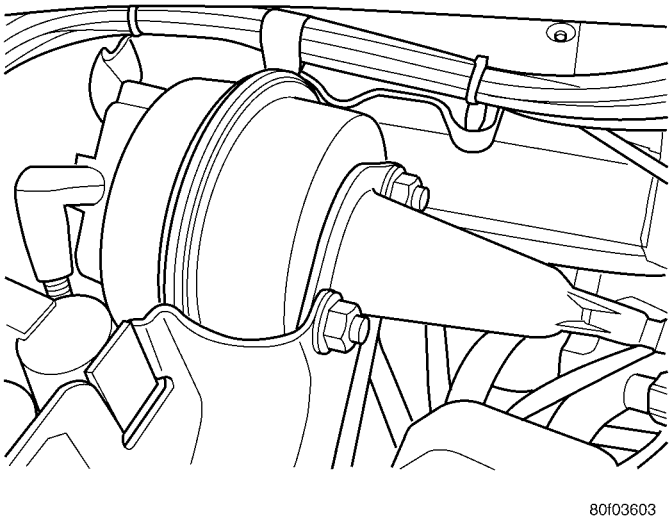

Fig. 10 SPEED CONTROL SERVO - 2.4L TURBO

(3) Slide cable bell housing over servo mounting studs through the bracket.

(4) Install 2 nuts, tighten to 7 N·m (60 ins. lbs.).

(5) Slide cables into throttle cable bracket and engage retaining tabs (Fig. 4).

(6) Rotate the throttle cam forward to the wide open position and install speed control cable clasp (Fig. 4).

(7) Rotate the throttle cam forward to the wide open position and install throttle cable clasp.

(8) Install engine cover and throttle control shield, if equipped.

(9) Install the negative battery cable.

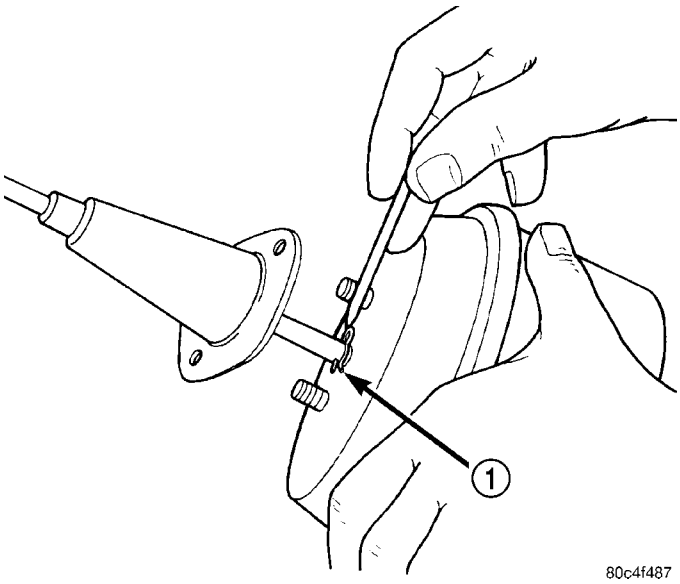

Fig. 11 Cable Clip

1 - HAIRPIN CLIP

(10) Install the air cleaner lid, makeup air hose.

INSTALLATION - 2.4L TURBO

(1) Install the cable.

(2) Install the retaining clip holding cable to servo (Fig. 11).

(3) Connect and Lock the electrical connector to the speed control servo (Fig. 9).

(4) Install the speed control servo to the mounting bracket.

(5) Install the 2 nuts to the speed control servo studs (Fig. 10) and tighten to 7 N·m(60 in. lbs.).

(6) Install the vacuum line to the speed control servo nipple (Fig. 9).

(7) Install speed control cable to throttle cable bracket (Fig. 8).

(8) Install the speed control cable to the throttle body lever.

(9) Install the throttle control shield (Fig. 7).

(10) Connect the negative battery cable.

SERVO

DESCRIPTION

The servo unit consists of a solenoid valve body, and a vacuum chamber. The solenoid valve body contains three solenoids:

- Vacuum
- Vent
- Dump

The vacuum chamber contains a diaphragm with a cable attached to control the throttle linkage.

SERVO (Continued)

OPERATION

The PCM controls the solenoid valve body. The solenoid valve body controls the application and release of vacuum to the diaphragm of the vacuum servo. The servo unit cannot be repaired and is serviced only as a complete assembly.

Power is supplied to the servo by the PCM through the brake switch. The PCM controls the ground path for the vacuum and vent solenoids.

The dump solenoid is energized anytime it receives power. If power to the dump solenoid is interrupted, the solenoid dumps vacuum in the servo. This provides a safety backup to the vent and vacuum solenoids.

The vacuum and vent solenoids must be grounded by the PCM to operate. When the PCM grounds the vacuum servo solenoid, the solenoid allows vacuum to enter the servo and pull open the throttle plate using the cable. When the PCM breaks the ground, the solenoid closes and no more vacuum is allowed to enter the servo. The PCM also operates the vent solenoid via ground. The vent solenoid opens and closes a passage to bleed or hold vacuum in the servo as required.

The PCM cycles the vacuum and vent solenoids to maintain the set speed, or to accelerate and decelerate the vehicle. To increase throttle opening, the PCM grounds the vacuum and vent solenoids. To decrease throttle opening, the PCM removes the grounds from the vacuum and vent solenoids.

REMOVAL

REMOVAL

(1) Remove the air cleaner lid, and makeup air hose.

(2) Remove the negative battery cable.

(3) Remove two nuts attaching speed control cable and mounting bracket to servo (Fig. 12).

(4) Remove servo from the mounting bracket.

(5) Disconnect electrical connectors and vacuum hose.

(6) Remove the engine cover.

(7) Remove cable from throttle cam. Refer to Speed Control Servo Cable Removal/Installation in this section.

(8) Remove the 2 push nuts and discard.

(9) Remove clip attaching cable to servo (Fig. 13).

REMOVAL - 2.4L TURBO

(1) Disconnect the negative battery cable.

(2) Remove the throttle control shield (Fig. 7).

(3) Remove the speed control cable from the throttle body lever.

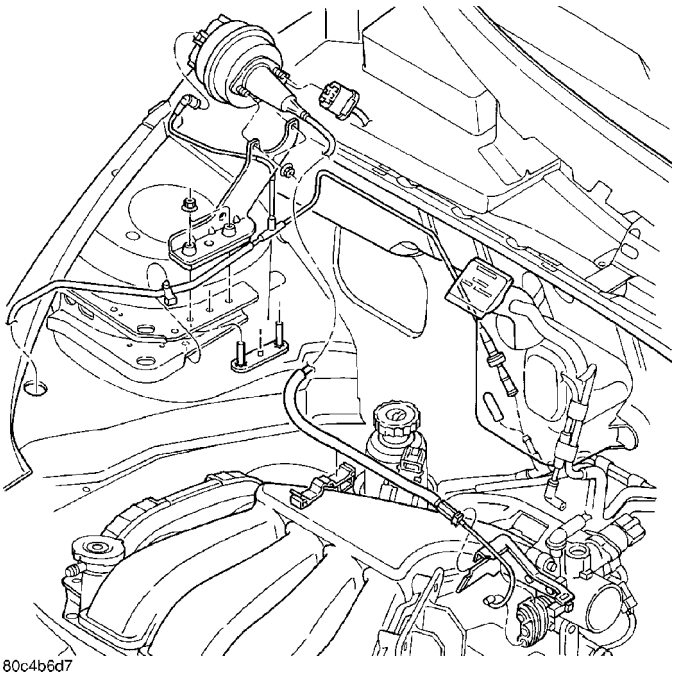

Fig. 12 Speed Control System

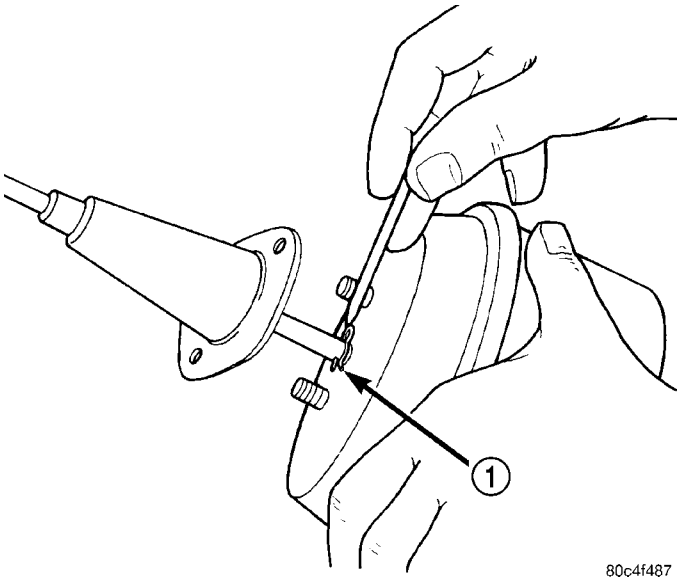

Fig. 13 Attaching Clip

1 - HAIRPIN CLIP

(4) Remove the vacuum line from the speed control servo (Fig. 9).

(5) Remove the 2 nuts from the speed control servo studs (Fig. 10).

(6) Push and pull up the speed control servo from the mounting bracket.

(7) Unlock and disconnect the electrical connector from the speed control servo (Fig. 10).

(8) Remove the 2 push clips and discard.

(9) Remove the retaining clip holding cable to servo (Fig. 11).

SERVO (Continued)

INSTALLATION

INSTALLATION

(1) Install hairpin clip to servo and cable (Fig. 13).
(2) Install servo studs through cable bell and then the bracket.
(3) Install nuts, tighten to 7 N·m (60 in. lbs.).
(4) Install speed control cable to throttle cam. Refer to Speed Control Servo Cable Removal/Installation in this section.
(5) Connect electrical connector.
(6) Connect the vacuum hose to servo.
(7) Install the engine cover.
(8) Install the negative battery cable.
(9) Install the air cleaner lid, and makeup air hose.

INSTALLATION - 2.4L TURBO

(1) Install the retaining clip holding cable to servo (Fig. 11).
(2) Connect and lock the electrical connector to the speed control servo (Fig. 10).
(3) Install the speed control servo to the mounting bracket.
(4) Install the 2 nuts from the speed control servo studs (Fig. 10).
(5) Install the vacuum line to the speed control servo (Fig. 9).
(6) Install the speed control cable to the throttle body lever.
(7) Install the throttle control shield (Fig. 7).
(8) Connect the negative battery cable.

SWITCH

REMOVAL

The speed control switches is mounted in the steering wheel and wired through the clock spring device under the airbag module (Fig. 14).

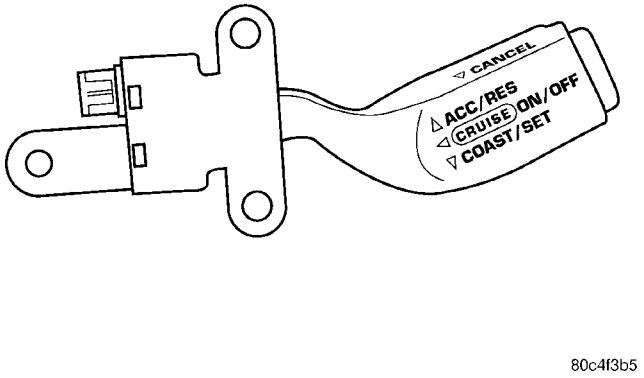

Fig. 14 Speed Control Switch

WARNING: IF REMOVAL OF AIRBAG MODULE IS NECESSARY, REFER TO THE RESTRAINT SYSTEMS.

(1) Remove the air cleaner lid, disconnect the inlet air temperature sensor and makeup air hose.
(2) Remove the negative battery cable.
(3) Turn off ignition.
(4) Remove air bag, refer to the Restraint systems section.
(5) Remove the top mounting screw (Fig. 15).

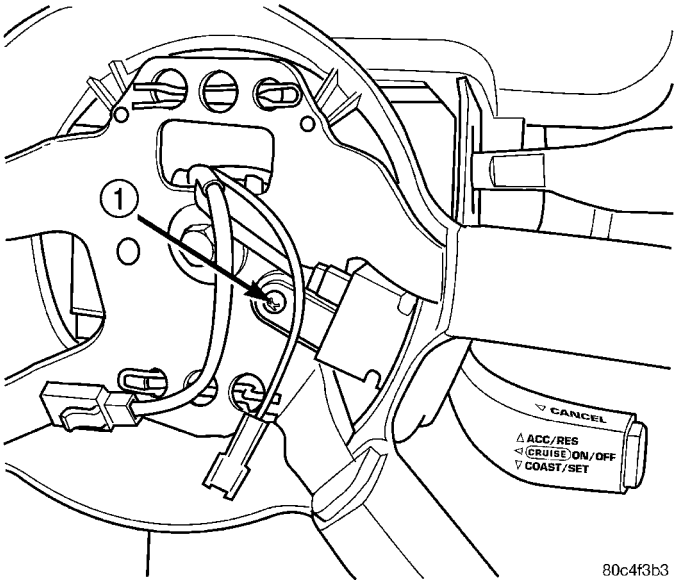

Fig. 15 Switch Top Mounting Screw

1 - TOP MOUNTING SCREW

(6) Rotate steering wheel so that the switch is in the 6 o'clock position. Remove 2 screws from the back side of the speed control switch.
(7) Disconnect the electrical connector.
(8) Remove switch (Fig. 16).

INSTALLATION

The speed control switch is mounted in the steering wheel and wired through the clock spring device under the airbag module (Fig. 14).

WARNING: IF REMOVAL OF AIRBAG MODULE IS NECESSARY, REFER TO THE RESTRAINT SYSTEMS.

(1) Connect the electrical connector.
(2) Install switch (Fig. 16) and tighten the screws to 1.6 N·m (15 ins. lbs.). Make sure rubber seal is in place around switch.
(3) Install airbag, refer to the Restraint Systems section.
(4) Install the negative battery cable.

SWITCH (Continued)

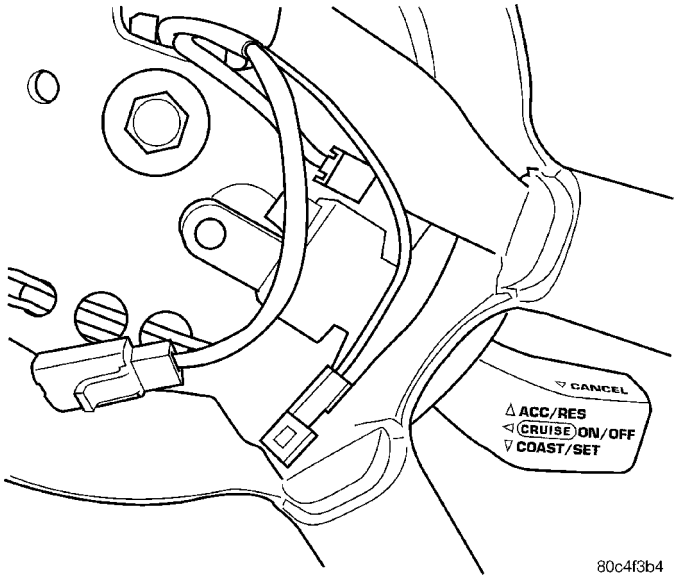

Fig. 16 Switch Removal

(5) Install the air cleaner lid, connect the inlet air temperature sensor and makeup air hose.

VACUUM RESERVOIR

DESCRIPTION

The vacuum reservoir is located in the right front fender well on the frame rail (Fig. 17). It is made of plastic.

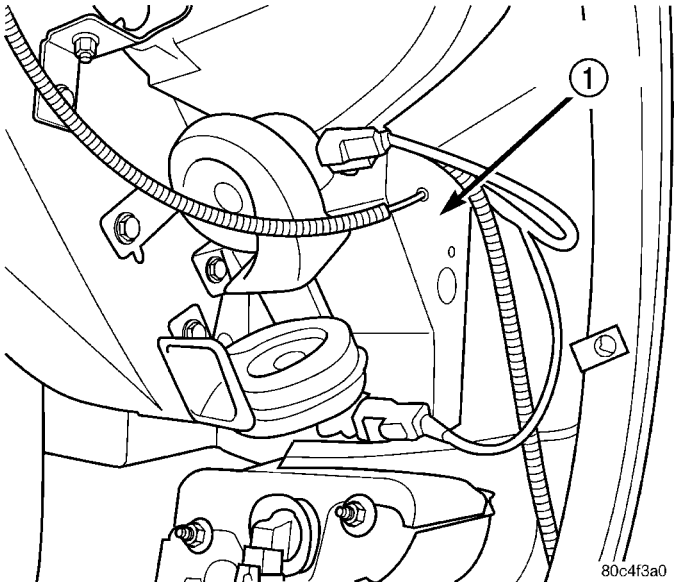

Fig. 17 Vacuum Reservoir

1 - VACUUM RESERVOIR

OPERATION

The reservoir stores engine vacuum. Manifold vacuum is supplied from the brake booster check valve. The speed control vacuum supply hose has a check valve at the source (brake booster) to maintain the highest available vacuum level in the servo, reservoir and vacuum hoses. When engine vacuum drops, as in climbing a grade while driving, the reservoir supplies the vacuum needed to maintain proper speed control operation. The vacuum reservoir cannot be repaired and must be replaced if faulty.

REMOVAL

The vacuum reservoir is located in the right front fender well on the frame rail (Fig. 19). It is made of plastic.

(1) Remove the air cleaner lid, disconnect the inlet air temperature sensor and makeup air hose.

(2) Remove the negative battery cable.

(3) Raise vehicle and support.

(4) Remove the right front wheel.

(5) Remove the front half of the inner splash shield and relocate rearward (Fig. 18).

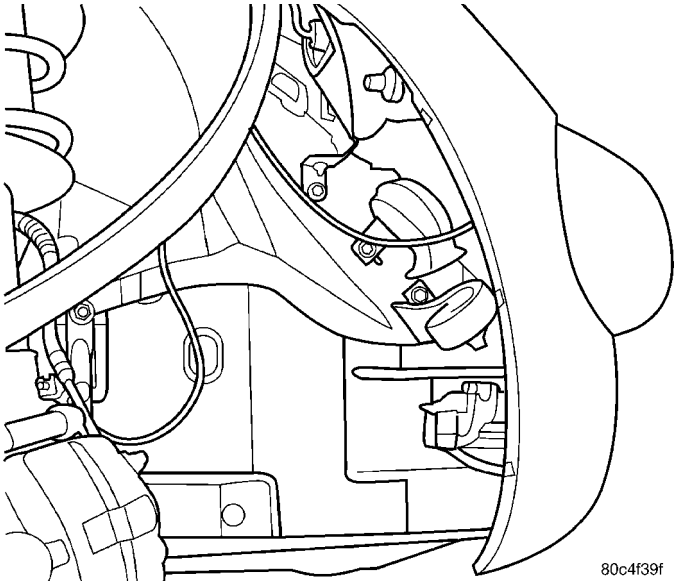

Fig. 18 Inner Splash Shield

VACUUM RESERVOIR (Continued)

(6) Remove the 2 screws from vacuum reservoir (Fig. 19).

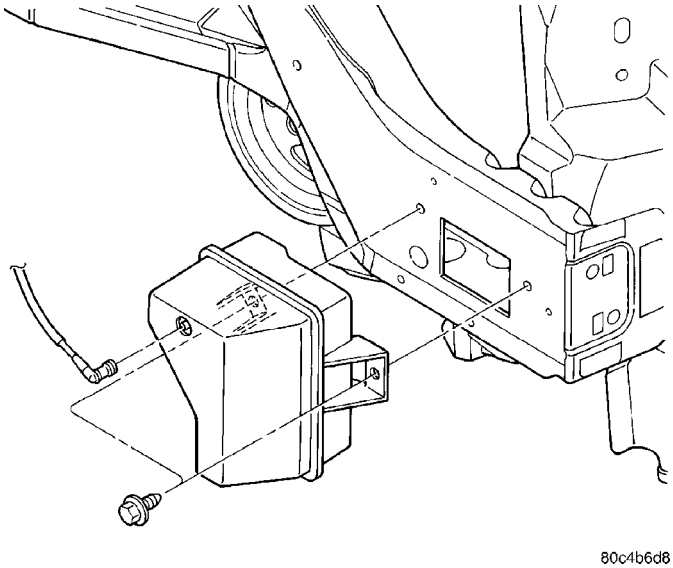

Fig. 19 Reservoir Mounting Screws

(7) Disconnect vacuum hose from reservoir (Fig. 20).

INSTALLATION

The vacuum reservoir is located in the right front fender well on the frame rail (Fig. 19). It is made of plastic.

(1) Connect hoses to reservoir.

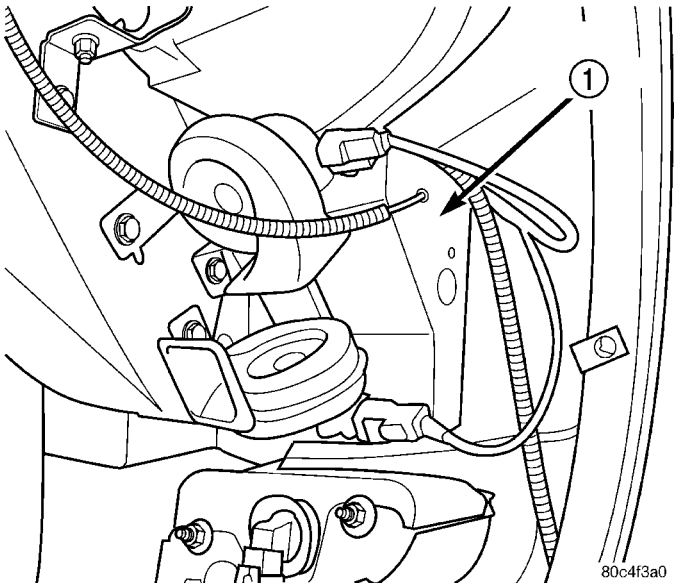

Fig. 20 Vacuum Reservoir

1 - VACUUM RESERVOIR

(2) Install reservoir and tighten screws to 5 N·m (45 ins. lbs.) (Fig. 19).

(3) Install the inner splash shield (Fig. 18).

(4) Lower vehicle.

(5) Install the negative battery cable.

(6) Install the air cleaner lid, connect the inlet air temperature sensor and makeup air hose.

VEHICLE THEFT SECURITY

TABLE OF CONTENTS

	page
VEHICLE THEFT SECURITY	
DESCRIPTION	1
OPERATION	2
DIAGNOSIS AND TESTING - SENTRY KEY IMMOBILIZER SYSTEM	2
STANDARD PROCEDURE	
STANDARD PROCEDURE - RKE/VTSS CONFIGURING A NEW MODULE	3
STANDARD PROCEDURE - SENTRY KEY IMMOBILIZER SYSTEM INITIALIZATION	3
DOOR CYLINDER LOCK SWITCH	
REMOVAL	4
INSTALLATION	4
HOOD AJAR SWITCH - EXPORT	
REMOVAL	5
INSTALLATION	5
INTRUSION SENSOR - EXPORT	
DESCRIPTION	5
OPERATION	5
REMOVAL	5
INSTALLATION	6
LIFTGATE CYLINDER LOCK SWITCH	
REMOVAL	6
INSTALLATION	6
SKIS INDICATOR LAMP	
DESCRIPTION	7
OPERATION	7
SIREN - EXPORT	
DESCRIPTION	7
OPERATION	7
REMOVAL	7
INSTALLATION	8
TRANSPONDER KEY	
DESCRIPTION	8
OPERATION	8
STANDARD PROCEDURE - TRANSPONDER PROGRAMMING	8

VEHICLE THEFT SECURITY

DESCRIPTION

VEHICLE THEFT SECURITY SYSTEM

The Vehicle Theft/Security System (VTSS) is designed to protect against whole vehicle theft. The system monitors vehicle doors, liftgate, and ignition for unauthorized operation.

The VTSS activates:

- Sounding of the horn.
- Flashing of the park lamps.
- Flashing of the headlamps.

The vehicle theft security system contains a built-in tamper alert feature. This feature is designed to notify the driver that the system had been activated during its armed state. When the vehicle is disarmed, 3 horn pulses will be followed by the initial disarming pulse letting the driver know the system had been activated.

VEHICLE THEFT SECURITY SYSTEM - EXPORT

Some vehicles are equipped with a premium vehicle theft security system. The Premium Vehicle Theft Security System (VTSS) is designed to protect against whole vehicle theft and the loss of its contents. This system monitors vehicle doors, hood, liftgate and ignition key cylinders for unauthorized operation, as well as monitoring any movement inside the cabin when the intrusion sensor is armed.

Some vehicles are equipped with a standard vehicle theft security system. This system is designed to protect against whole vehicle theft. This system monitors the vehicle doors, liftgate, and ignition key cylinders for unauthorized operation.

SENTRY KEY IMMOBILIZER SYSTEM

The Sentry Key Immobilizer System (SKIS) is available as a factory-installed option on this vehicle. It is designed to provide passive protection against unauthorized vehicle use by disabling the engine, after two (2) seconds of running, whenever an invalid key is used to start the vehicle. The SKIS is active whenever the ignition is on and does not require any customer intervention. The primary components of the system are the Sentry Key Immobilizer Module (SKIM), Sentry Key (ignition key with a transponder molded into the head), indicator light, and the Powertrain Control Module (PCM). The SKIM is mounted to the steering column with the molded, integral antenna mounted on the trim ring surrounding the ignition lock cylinder. The indicator light, is located in the instrument cluster.

VEHICLE THEFT SECURITY (Continued)

OPERATION

VEHICLE THEFT SECURITY SYSTEM

The system is armed when the vehicle is locked using the:

- Power door lock switches.
- Remote Keyless Entry (RKE) transmitter.
- Key cylinder switches.

After the vehicle is locked and the last door is closed, the circular red VTSS indicator in the instrument cluster will flash quickly for 16 seconds, indicating that arming is in progress. If no monitored systems are activated during this period the system will arm. After 16 seconds, the LED will continue to flash at a slower rate indicating the system is armed.

If the VTSS indicator does not illuminate at all upon door closing it indicates that the system is not arming.

VTSS disarming occurs upon normal vehicle entry by unlocking either door via the key cylinders or RKE transmitter, or by starting the vehicle with a valid Sentry Key. This disarming will also halt the alarm once it has been activated.

A tamper alert exists to notify the driver that the system had been activated. This alert consists of 3 horn pulses when the vehicle is disarmed.

The VTSS will not arm by mechanically locking the vehicle doors. This will manually override the system.

TRIGGERING THE VTSS

ARMING THE VTSS

Locking the power door switch and closing the door or the keyless transmitter will arm the system, or locking any door or liftgate with the key cylinder switch.

SETTING OFF THE VTSS Any of the following actions will trigger the system:

(1) Opening any door or liftgate.

NOTE: Only EXPORT alarm systems will include a hood ajar switch, motion sensor, and decklid ajar switch.

(2) Turning the ignition to the ON position with an invalid key.

VEHICLE THEFT SECURITY SYSTEM - EXPORT

In the event the Premium VTSS is triggered, the VTSS siren will sound and the turn indicator lamps will flash on the premium security system. The premium system cannot be disarmed via the key cylinders.

In the event the Standard VTSS is triggered, the VTSS will sound the vehicle horn and flash the headlamp and park lamps in a alternating fashion.

The VTSS and RKE system receives signals from the hand-held key fob or transmitter. European market vehicles use 433 MHz frequency. Japan market vehicles use 268 MHz frequency.

SENTRY KEY IMMOBILIZER SYSTEM

The SKIS includes keys from the factory which are pre-programmed. Each SKIM will recognize a maximum of eight Sentry Keys. If the customer would like to own additional keys other than those provided with the vehicle, they can be purchased from any authorized dealer. These keys must be programmed to the SKIM on the vehicle in order for the system to recognize them as valid keys. This can be done by the dealer with a DRB III® scan tool or by a customer if this feature is available in their market and they have two (2) valid keys already available to them. Refer to the Service Procedures portion of this system for additional details. The SKIS performs a self-test each time the ignition switch is turned to the ON position and will store Diagnostic Trouble Codes (DTC's) if a system malfunction is detected. The DTC's can be retrieved using a DRB III® scan tool. The SKIS can be diagnosed using the proper Powertrain Diagnostic Procedures manual.

DIAGNOSIS AND TESTING - SENTRY KEY IMMOBILIZER SYSTEM

WARNING: ON VEHICLES EQUIPPED WITH AIRBAGS, (Refer to 8 - ELECTRICAL/RESTRAINTS - WARNING). FAILURE TO TAKE THE PROPER PRECAUTIONS COULD RESULT IN ACCIDENTAL AIRBAG DEPLOYMENT AND POSSIBLE PERSONAL INJURY.

NOTE: The following tests may not prove conclusive in the diagnosis of this system. The most reliable, efficient, and accurate means to diagnose the Sentry Key Immobilizer System (SKIS) involves the use of a DRB lll® scan tool and the proper Powertrain Diagnostic Procedures manual.

The Sentry Key Immobilizer System (SKIS) and the Programmable Communication Interface (PCI) bus network should be diagnosed using a DRB lll® scan tool. The DRB lll® will allow confirmation that the PCI bus is functional, that the Sentry Key Immobilizer Module (SKIM) is placing the proper messages on the PCI bus, and that the Powertrain Control Module (PCM) and the instrument cluster are receiving the PCI bus messages. Refer to the proper Powertrain Diagnostic Procedures manual. Refer to

VEHICLE THEFT SECURITY (Continued)

Wiring Diagrams for complete circuit descriptions and diagrams.

(1) Check the fuses in the fuse block. If OK, go to Step 2. If not OK, repair the shorted circuit or component as required and replace the faulty fuse.

(2) Disconnect and isolate the battery negative cable (Fig. 1). Unplug the wire harness connector at the SKIM. Check for continuity between the ground circuit cavity of the SKIM wire harness connector and a good ground. There should be continuity. If OK, go to Step 3. If not OK, repair the open circuit to ground as required.

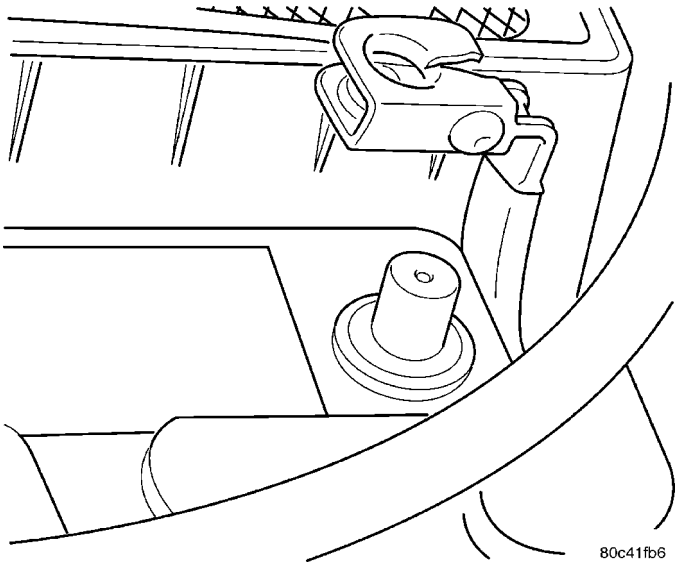

Fig. 1 BATTERY NEGATIVE CABLE - REMOVE/ INSTALL

(3) Connect the battery negative cable. Check for battery voltage at the fused B(+) circuit cavity of the SKIM wire harness connector. If OK, go to Step 4. If not OK, repair the open circuit to the fuse in the fuse block as required.

(4) Turn the ignition switch to the ON position. Check for battery voltage at the fused ignition switch output (run/start) circuit cavity of the SKIM wire harness connector. If OK, use a DRB lll® scan tool and the proper Powertrain Diagnostic Procedures manual to complete the diagnosis of the SKIS. If not OK, repair the open circuit to the fuse in the fuse block as required.

GENERAL TROUBLESHOOTING TIPS

(1) Using a DRB III® scan tool, read and record the faults as they exist in the module when you first start your analysis of the vehicle. It is important to document these faults because the SKIM does not differentiate between historical faults (those faults that occurred in the past) and active faults (those faults that are present now). If this problem turns out to be an intermittent condition, this information may become very valuable to your analysis.

(2) Using a DRB III® scan tool, erase the faults in the Sentry Key Immobilizer Module (SKIM).

(3) Turn the ignition off and back on again.

(4) Using a DRB III® scan tool, read the faults now listed in the Sentry Key Immobilizer Module (SKIM).

(5) Using the fault information you now have, refer to the proper Powertrain Diagnostic Procedures manual for additional specific steps.

STANDARD PROCEDURE

STANDARD PROCEDURE - RKE/VTSS CONFIGURING A NEW MODULE

To switch operating modes or to configure a new module, a DRB lll® scan tool must be used.

(1) Hook up the DRB lll® scan tool to the Data Link Connector (DLC).

(2) With the key in the ignition, turn the key to the RUN position.

(3) After the DRB lll® scan tool initialization, perform the following:

(a) Select “Theft Alarm.”

(b) Select “VTSS.”

(c) Select “Miscellaneous.”

(4) Once in the “Miscellaneous” screen:

(a) If you wish to configure a new module, select “Configure Module.”

STANDARD PROCEDURE - SENTRY KEY IMMOBILIZER SYSTEM INITIALIZATION

The Sentry Key Immobilizer System (SKIS) initialization should be performed following a Sentry Key Immobilizer Module (SKIM) replacement.

It can be summarized by the following:

(1) Obtain the vehicles unique PIN number assigned to it’s original SKIM from the vehicle owner, the vehicle’s invoice or from Chrysler’s Customer Center.

(2) With the DRB lll® scan tool, select “Theft Alarm,” “SKIM,” Miscellaneous.” Select “SKIM Module Replaced” function and the DRB lll® will prompt you through the following steps.

(3) Enter secured access mode using the unique four digit PIN number.

(4) Program the vehicle’s VIN number into the SKIM’s memory.

(5) Program the country code into the SKIM’s memory.

(6) Transfer the vehicle’s unique Secret Key data from the PCM. This process will require the SKIM to be in **secured access mode**. The PIN number must be entered into the DRB lll® before the SKIM will

VEHICLE THEFT SECURITY (Continued)

enter **secured access mode**. Once **secured access mode** is active, the SKIM will remain in that mode for 60 seconds.

(7) Program all customer keys into the SKIM's memory. This required that the SKIM be in **secured access mode** The SKIM will immediately exit **secured access mode** after each key is programmed.

NOTE: If a PCM is replaced, the unique "Secret Key" data must be transferred from the SKIM to the PCM. This procedure requires the SKIM to be placed in SECURED ACCESS MODE using the four digit PIN code.

DOOR CYLINDER LOCK SWITCH

REMOVAL

(1) Open hood.

(2) Disconnect and isolate the battery negative cable (Fig. 1).

(3) Remove front door trim panel (Refer to 23 - BODY/DOOR - FRONT/TRIM PANEL - REMOVAL).

(4) Remove door cylinder lock switch from door lock cylinder (Fig. 2).

(5) Remove the switch from the inside of the door by pulling the switch and attached wires out of the door.

(6) Cut the two wires leading to the bad switch, at least three inches from where the wires enter the switch.

INSTALLATION

(1) Splice in the new switch. Refer to Wiring Diagrams for splicing information.

(2) Route the door cylinder lock switch inside the door panel.

(3) Install door cylinder lock switch on rear of door lock cylinder (Fig. 2).

(4) Install the front door trim panel (Refer to 23 - BODY/DOOR - FRONT/TRIM PANEL - INSTALLATION).

(5) Connect the battery negative cable (Fig. 1).

(6) Close hood.

(7) Verify vehicle and system operation.

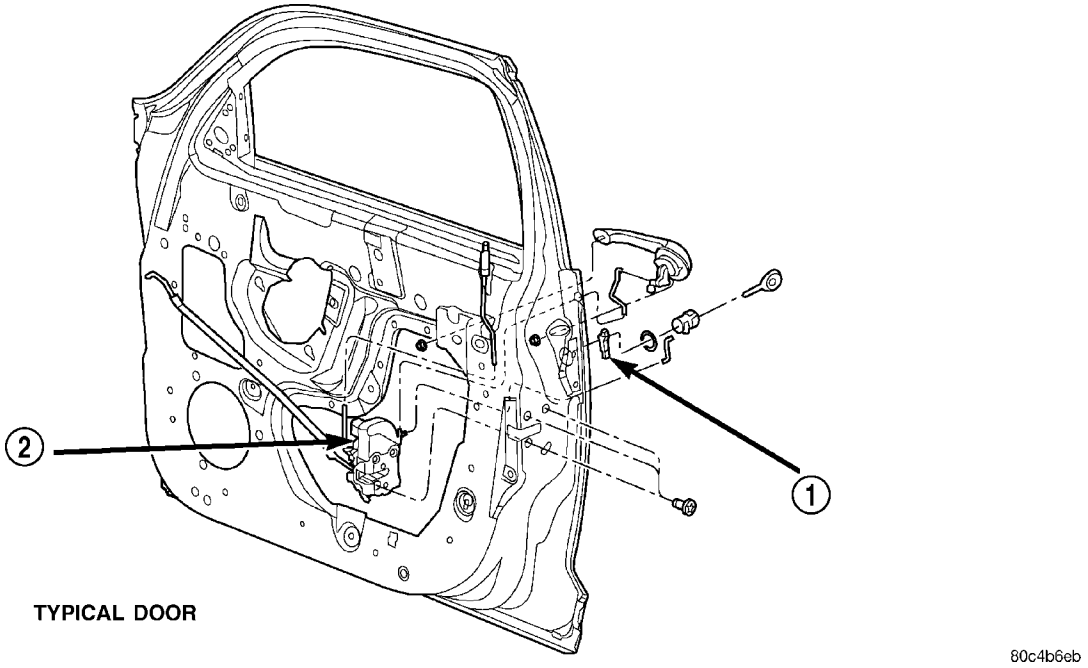

Fig. 2 DOOR CYLINDER LOCK SWITCH - REMOVE/INSTALL

1 - DOOR CYLINDER LOCK SWITCH
2 - DOOR LOCK MOTOR

HOOD AJAR SWITCH - EXPORT

REMOVAL

(1) Open hood.

(2) Disconnect and isolate the battery negative cable (Fig. 1).

(3) Disconnect wire harness connector from hood ajar switch.

(4) Firmly press tangs on the bottom side of the switch together and push up through bracket (Fig. 3).

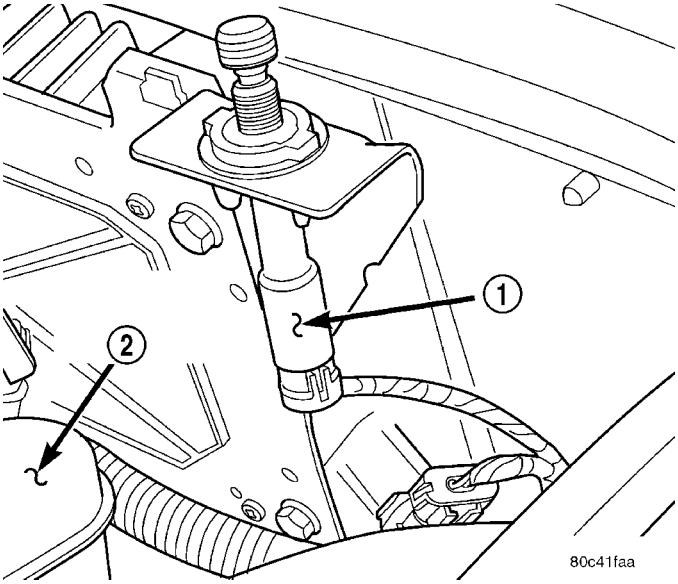

Fig. 3 HOOD AJAR SWITCH LOCATION

1 - HOOD AJAR SWITCH CONNECTOR
2 - BRAKE FLUID RESERVOIR

(5) Remove switch from vehicle.

INSTALLATION

(1) Firmly press hood ajar switch through bracket (Fig. 3).

(2) Connect wire harness connector to hood ajar switch.

(3) Connect the battery negative cable (Fig. 1).

(4) Close hood.

(5) Verify vehicle and system operation.

INTRUSION SENSOR - EXPORT

DESCRIPTION

Some vehicles equipped with the premium vehicle theft security system (VTSS) use a ultrasonic intrusion sensor. This intrusion sensor is integrated into the dome lamp (Fig. 4) and detects any movement in the cabin when the VTSS system and the intrusion sensor are armed. The sensor cannot be serviced separately and if found to be faulty the entire dome lamp assembly must be replaced.

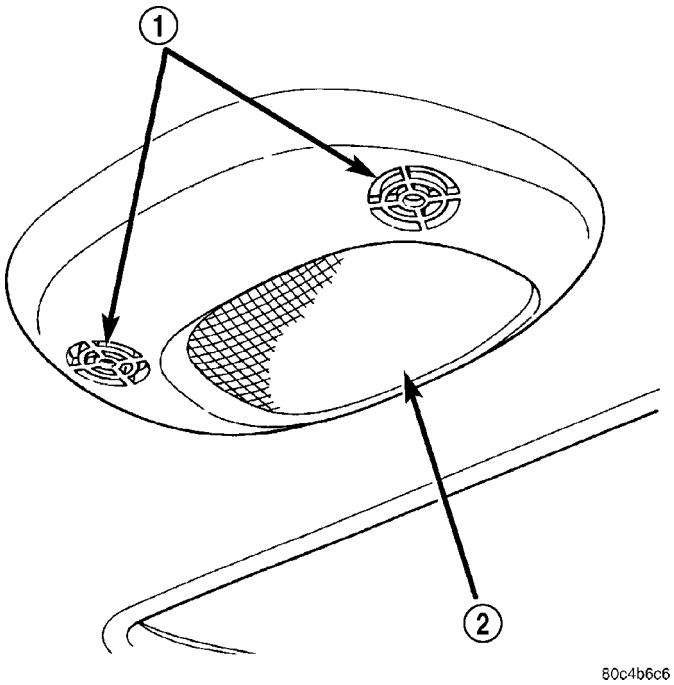

Fig. 4 VTSS INTRUSION SENSOR

1 - INTRUSION SENSORS
2 - DOME LAMP

OPERATION

In the event the intrusion sensor detects movement inside the vehicle's interior (with system armed), the ARKEM module will sound the siren. Refer to ARKEM module description and operation in the Power Door Locks section of the service manual for detailed information.

DISARMING THE INTRUSION SENSOR

- Press the "LOCK" button on Remote Keyless Entry transmitter THREE times within FIVE seconds. This operation must be performed during the first 16 seconds of VTSS system arming.
- Rotating the drivers door key cylinder THREE times within FIVE seconds. This operation must be performed during the first 16 seconds of VTSS system arming.

REMOVAL

(1) Disconnect and isolate the negative battery cable.

(2) Grasp the dome lamp unit with intrusion sensor and rotate counterclockwise (Fig. 5).

(3) Pull straight down on dome lamp unit with intrusion sensor.

(4) Disconnect electrical connector.

INTRUSION SENSOR - EXPORT (Continued)

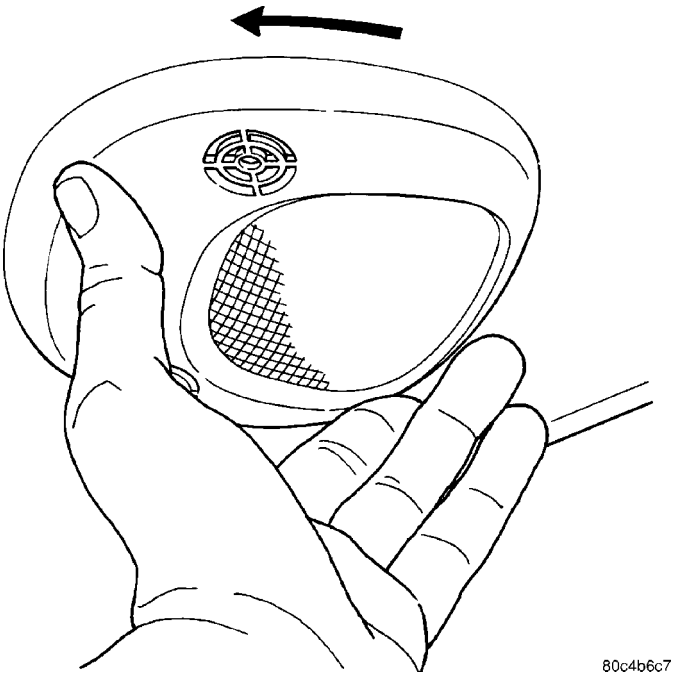

Fig. 5 DOME LAMP UNIT WITH INTRUSION SENSOR REMOVAL

(5) Remove the dome lamp unit with intrusion sensor from the vehicle.

INSTALLATION

(1) Connect electrical connector.

(2) Orient the dome lamp unit with intrusion sensor in a way that the tabs align with the slots in the headliner (Fig. 6).

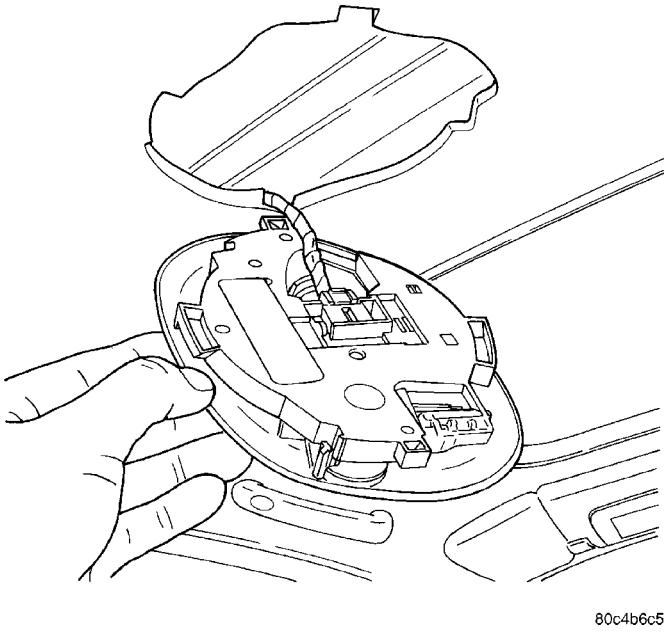

Fig. 6 DOME LAMP UNIT WITH INTRUSION SENSOR ORIENTATION TO HEADLINER

(3) Push the dome lamp unit with intrusion sensor straight up.

(4) Rotate the dome lamp unit with intrusion sensor clockwise.

(5) Connect the battery negative cable.

LIFTGATE CYLINDER LOCK SWITCH

REMOVAL

(1) Open hood.

(2) Disconnect and isolate the battery negative cable (Fig. 1).

(3) Remove the liftgate trim panel (Refer to 23 - BODY/DECKLID/HATCH/LIFTGATE/TAILGATE/ TRIM PANEL - REMOVAL).

(4) Remove the liftgate cylinder U-bracket by sliding it out.

(5) Remove switch E-clip and disconnect connector.

(6) Remove liftgate cylinder lock switch from liftgate lock cylinder (Fig. 7) by gently unsnapping.

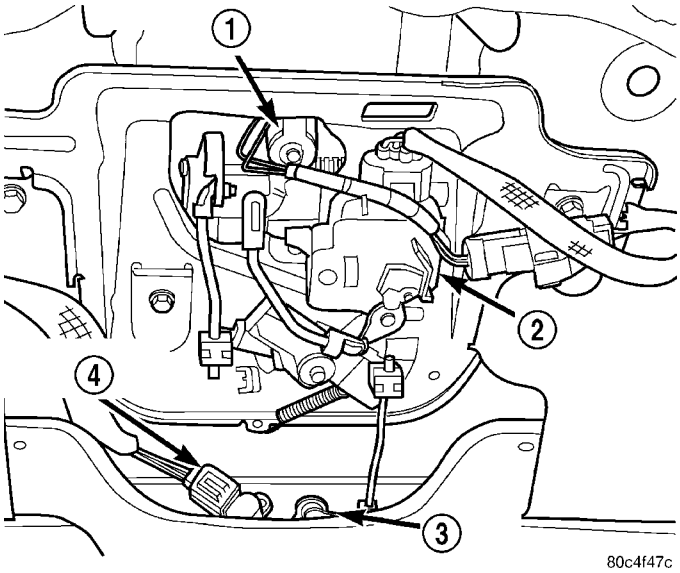

Fig. 7 LIFTGATE CYLINDER LOCK SWITCH LOCATION

1 - LIFTGATE CYLINDER LOCK SWITCH
2 - LIFTGATE LOCK MOTOR
3 - LATCH ASSEMBLY
4 - LIFTGATE AJAR SWITCH

INSTALLATION

(1) Install liftgate cylinder lock switch on rear of liftgate lock cylinder without rotating the switch (Fig. 2).

(2) Install the liftgate cylinder U-bracket by sliding it in.

(3) Install switch E-clip and connector.

LIFTGATE CYLINDER LOCK SWITCH (Continued)

(4) Install the liftgate trim panel (Refer to 23 - BODY/DECKLID/HATCH/LIFTGATE/TAILGATE/ TRIM PANEL - INSTALLATION).
(5) Connect the battery negative cable (Fig. 1).
(6) Close hood.
(7) Verify vehicle and system operation.

SKIS INDICATOR LAMP

DESCRIPTION

The Sentry Key Immobilizer System (SKIS) uses the Vehicle Theft Security System (VTSS) indicator LED to give an indication when the SKIS is faulty or when the vehicle has been immobilized due to the use of an invalid ignition key. The LED is controlled by the instrument cluster circuitry based upon messages received from the Sentry Key Immobilizer Module (SKIM).

OPERATION

The SKIM sends messages to the instrument cluster, to turn the LED on for about three seconds when the ignition switch is turned to the ON position as a bulb test. After completion of the bulb test, the SKIM sends PCI bus messages to keep the LED off for a duration of about one second. Then the SKIM sends messages to the instrument cluster circuitry to turn the LED on or off based upon the results of the SKIS self-tests. If the VTSS indicator LED comes on and stays on after the bulb test, it indicates that the SKIM has detected a system malfunction and/or that the SKIS has become inoperative. If the SKIM detects an invalid key when the ignition switch is turned to the ON position, it sends messages to the instrument cluster to flash the VTSS indicator LED.

The SKIM can also send messages to the instrument cluster to flash the LED and to generate a single audible chime tone. These functions serve as an indication to the customer that the SKIS has been placed in its “Customer Learn” programming mode. See Sentry Key Immobilizer System Transponder Programming in this group for more information on the “Customer Learn” programming mode.

The VTSS indicator LED uses a Light Emitting Diode (LED) on the instrument cluster electronic circuit board. It is not serviceable separate from the instrument cluster assembly. If the VTSS indicator LED comes on and stays on after the bulb test function, diagnosis of the SKIS should be performed with a DRB lll® scan tool and the proper Powertrain Diagnostic Procedures manual.

SIREN - EXPORT

DESCRIPTION

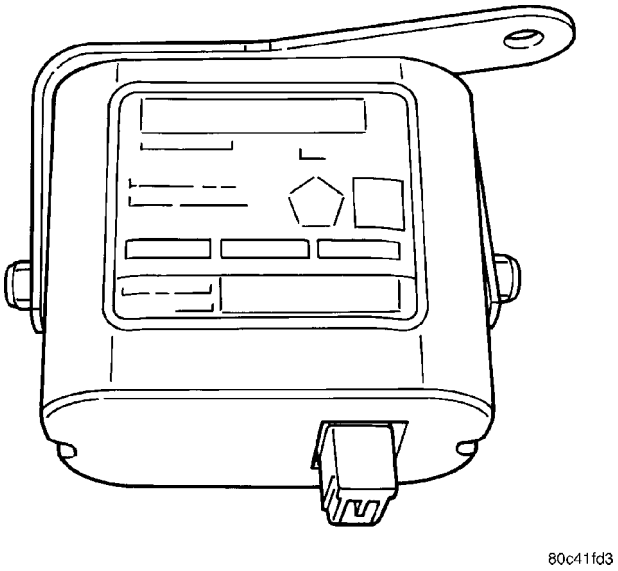

Fig. 8 VEHICLE THEFT SECURITY SIREN

Some vehicles equipped with the premium vehicle theft security system (VTSS) utilize a separate siren (Fig. 8). This siren is dedicated to the Vehicle Theft Security System (VTSS) and is controlled by the ARKEM module (Remote Keyless Entry). The siren can reach sound decibels as high as 110 dB. A internal battery-backup power source and auto detect feature are also built into the siren. The internal battery-backup provides sufficient power to sound the alarm even if the vehicle’s electrical system is depleted. The auto detect feature has the ability to sound the siren if any of the wires (voltage supply, ground and signal) leading to the siren are cut while the system is armed.

OPERATION

In the event the vehicle theft security is triggered, the ARKEM module will sound the siren. Refer to ARKEM module description and operation in the Power Door Locks section of the service manual for detailed information.

REMOVAL

(1) Disconnect and isolate the battery negative cable.
(2) Remove the left front wheel well splash shield (Refer to 23 - BODY/EXTERIOR/FRONT END SPLASH SHIELDS - REMOVAL).
(3) Remove the air blocker to see siren (Fig. 9).
(4) Disconnect the siren electrical connector.
(5) Remove the siren retaining screws and remove the siren from the vehicle.

SIREN - EXPORT (Continued)

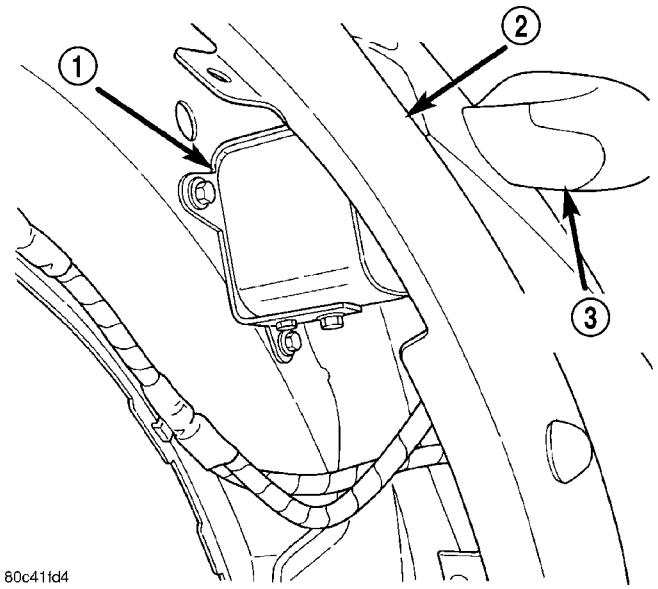

Fig. 9 SIREN LOCATION

1 - SIREN
2 - LEFT FRONT FENDER
3 - LEFT DOOR MIRROR

INSTALLATION

(1) Position siren and install retaining screws.
(2) Connect the siren electrical connector.
(3) Install air blocker in original position.
(4) Install the left front wheel well splash shield (Refer to 23 - BODY/EXTERIOR/FRONT END SPLASH SHIELDS - INSTALLATION).
(5) Connect the battery negative cable.

TRANSPONDER KEY

DESCRIPTION

The Sentry Key Immobilizer System (SKIS) uses a transponder chip that is integral to each ignition key (Fig. 10) to communicate with the Sentry Key Immobilizer Module (SKIM). Ignition keys are supplied with the vehicle when it is shipped from the factory. The transponder chip is undermolded within the head of the key. This undermold is hidden beneath an overmolded rubber cap.

OPERATION

Each Sentry Key transponder has a unique transponder identification code programmed into it by the manufacturer. The Sentry Key Immobilizer Module (SKIM) has a unique “Secret Key” code programmed into it by the manufacturer. When a Sentry Key transponder is programmed into the memory of the SKIM, the SKIM learns the transponder identification code from the transponder, and the transponder learns the “Secret Key” code from the SKIM. Each of

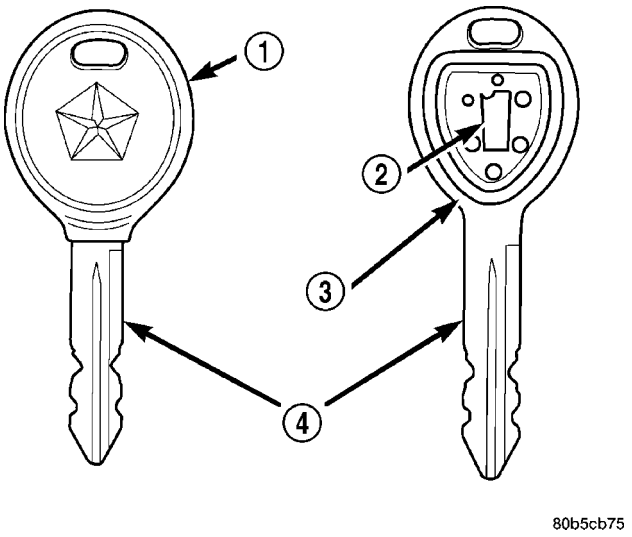

Fig. 10 SENTRY KEY IMMOBILIZER TRANSPONDER

1 - MOLDED CAP
2 - TRANSPONDER
3 - MOLDED CAP REMOVED
4 - SENTRY KEY

these codes is stored within the transponder and in the nonvolatile memory of the SKIM. Therefore, blank keys for the SKIS must be programmed by and into the SKIM, in addition to being cut to match the mechanical coding of the ignition lock cylinder. See Sentry Key Immobilizer System Transponder Programming in this section for more information.

The Sentry Key’s transponder is within the range of the SKIM’s transceiver antenna ring when it is inserted into the ignition lock cylinder. When the ignition switch is turned to the ON position, the SKIM communicates with the Sentry Key via a radio frequency (RF) signal. The SKIM determines if a valid key is present based on the information it receives from the Sentry Key. If a valid key is detected, that fact is communicated to the PCM via the PCI bus and the vehicle is allowed to continue running. If an invalid key is received by the PCM or no status at all is communicated, the vehicle will stall after two (2) seconds of running. The indicator light will be flashing at this point. The Sentry Key’s transponder can not be repaired. If it is faulty or damaged, it must be replaced.

STANDARD PROCEDURE - TRANSPONDER PROGRAMMING

USING A DRB III® SCAN TOOL

All Sentry Keys included with the vehicle are preprogrammed to work with the Sentry Key Immobilizer System (SKIS) when it is shipped from the factory. The Sentry Key Immobilizer Module (SKIM) can be programmed to recognize up to a total of eight

TRANSPONDER KEY (Continued)

Sentry Keys. When programming a blank Sentry Key transponder, the key must first be cut to match the ignition lock cylinder of the vehicle for which it will be used. The vehicle's four digit PIN code will be required to complete this task since you will need it to enter the Secured Access Mode in the SKIM. The following steps must be completed using a DRB III® scan tool:

(1) Insert the blank key into the ignition and turn it to the RUN position.

(2) Using a DRB III® scan tool, select "Theft Alarm," "SKIM," "Miscellaneous," and then "Program Ignition Key."

(3) Enter the four digit PIN code using the DRB III® scan tool. When programming is completed, the SKIM will exit Secured Access Mode and the DRB III® scan tool will display the results of your attempt to program the key. One of five distinct results may be displayed. All five are listed below:

- **"Programming Successful"** is displayed if the Sentry Key programming is successful.
- **"Learned Key in Ignition"** is displayed if the key in the ignition has already been programmed into that vehicle's SKIM.
- **"Eight Keys Already Learned (At The Maximum) Programming Not Done"** is displayed if eight keys have already been programmed into the SKIM. In this case, if a new key needs to be added due to a lost or defective key, the "Erase All Keys" command (which requires entering the Secured Access Mode) has to be performed. Following the "Erase All Keys" command, all keys that will be used to operate the vehicle **MUST** be reprogrammed to the SKIM.
- **"Programming Not Attempted"** is displayed after an "Erase All Keys" function is executed.
- **"Programming Key Failed"** is displayed if further diagnosis is required.

To learn additional keys, turn the ignition OFF, remove the learned key, insert the next new blank key, and repeat the steps from the beginning.

"CUSTOMER LEARN" MODE

This feature is only available on domestic vehicles or those which have a U.S. country code designator. This procedure requires access to at least two valid Sentry Keys. If two valid Sentry Keys are not available, Sentry Key programming will require the use of a DRB III® scan tool.

The steps required to program Sentry Keys with two valid Sentry Keys follows:

(1) Obtain the blank Sentry Key(s) that need to be programmed. Cut the keys to match the ignition lock cylinder mechanical key codes.

(2) Insert one of the two valid Sentry Keys into the ignition switch and turn the ignition switch to the ON position.

(3) After the ignition switch has been in the ON position for longer than three seconds, but no more than fifteen seconds, cycle the ignition switch back to the OFF position. Replace the first valid Sentry Key in the ignition lock cylinder with the second valid Sentry Key and turn the ignition switch back to the ON position. The second valid Sentry Key must be inserted, and the ignition key to the ON position, within 15 seconds of removing the first valid Sentry key.

(4) About ten seconds after the completion of Step 3, the indicator light will start to flash and a single audible chime tone will sound to indicate that the system has entered the "Customer Learn" programming mode.

(5) Within sixty seconds of entering the "Customer Learn" programming mode, turn the ignition switch to the OFF position, replace the valid Sentry Key with a blank Sentry Key transponder, and turn the ignition switch back to the ON position.

(6) About ten seconds after the completion of Step 5, a single audible chime tone will sound and the indicator light will stop flashing and stay on solid for three seconds and then turn off to indicate that the blank Sentry Key has been successfully programmed. The SKIS will immediately exit the "Customer Learn" programming mode and the vehicle may be started using the newly programmed Sentry Key.

These steps must be completed in their entirety for each additional Sentry Key to be programmed. If any of the above steps are not completed in the given sequence, or within the allotted time, the SKIS will exit the "Customer Learn" programming mode and the programming will be unsuccessful. The SKIS will also automatically exit the "Customer Learn" programming mode if:

- It sees a non-blank Sentry Key when it should see a blank.
- If it has already programmed eight (8) valid Sentry Keys.
- If the ignition switch is turned to the OFF position for more than about fifty (50) seconds.

NOTE: If you attempt to start the vehicle while in "Customer Learn" mode (LED flashing), the vehicle will behave as though an invalid key is being used (i.e. the engine will stall after two (2) seconds of running). No faults will be logged.

NOTE: Once a Sentry Key has been programmed to a particular vehicle, it cannot be used on any other vehicle.

WIPERS/WASHERS

TABLE OF CONTENTS

	page
WIPERS/WASHERS	
DESCRIPTION	1
OPERATION	3
DIAGNOSIS AND TESTING	
DIAGNOSIS AND TESTING - FRONT WIPER CONDITIONS	3
DIAGNOSIS AND TESTING - REAR WIPER SYSTEM	5
DIAGNOSIS AND TESTING - WASHER SYSTEM	5
FRONT WASHER NOZZLE	
REMOVAL	6
INSTALLATION	6
FRONT WIPER ARMS	
REMOVAL	6
INSTALLATION	7
ADJUSTMENTS	
ADJUSTMENT - FRONT WIPER ARMS	7
ADJUSTMENT - FRONT WIPER ARMS - RHD	7
FRONT WIPER BLADES	
REMOVAL	7
CLEANING - FRONT WIPER BLADES	8
INSTALLATION	8
FRONT WIPER BLADE ELEMENTS	
REMOVAL	8
INSTALLATION	8
FRONT WIPER MODULE	
REMOVAL	9
INSTALLATION	9
FRONT WIPER MODULE - RHD	
REMOVAL	10
INSTALLATION	10
FRONT WIPER MOTOR	
DIAGNOSIS AND TESTING - WIPER MOTOR	10
REMOVAL	12
INSTALLATION	12
FRONT WIPER MOTOR - RHD	
REMOVAL	12
INSTALLATION	13
FRONT WIPER SWITCH	
DIAGNOSIS AND TESTING - FRONT WIPER/WASHER SWITCH	13
REMOVAL	13
INSTALLATION	13
REAR WASHER NOZZLE	
REMOVAL	14
INSTALLATION	14
REAR WIPER ARMS	
REMOVAL	14
INSTALLATION	15
REAR WIPER BLADE	
REMOVAL	15
INSTALLATION	15
REAR WIPER MOTOR	
REMOVAL	15
INSTALLATION	16
REAR WIPER SWITCH	
DIAGNOSIS AND TESTING - REAR WIPER SWITCH	16
REMOVAL	17
WASHER HOSES	
REMOVAL	17
INSTALLATION	17
WASHER PUMP MOTOR	
REMOVAL	17
INSTALLATION	18
WASHER PUMP MOTOR - RHD	
REMOVAL	18
INSTALLATION	18
WASHER RESERVOIR	
REMOVAL	19
INSTALLATION	19

WIPERS/WASHERS

DESCRIPTION

FRONT WINDSHIELD WIPER SYSTEM

The front windshield wiper/washer switch is mounted on the right side of the multi-function switch (Fig. 1), on the steering column, behind the steering wheel.

The wiper system has LOW, HIGH, and INTERMITTENT switch positions. The intermittent wiper system, in addition to low and high speed, has a delay mode and a pulse wipe mode.

The intermittent wiper function is integral to the wiper switch. All electronics and relay are inside the switch assembly. The wiper switch also includes the MIST feature which provides a single wipe when actuated.

WIPERS/WASHERS (Continued)

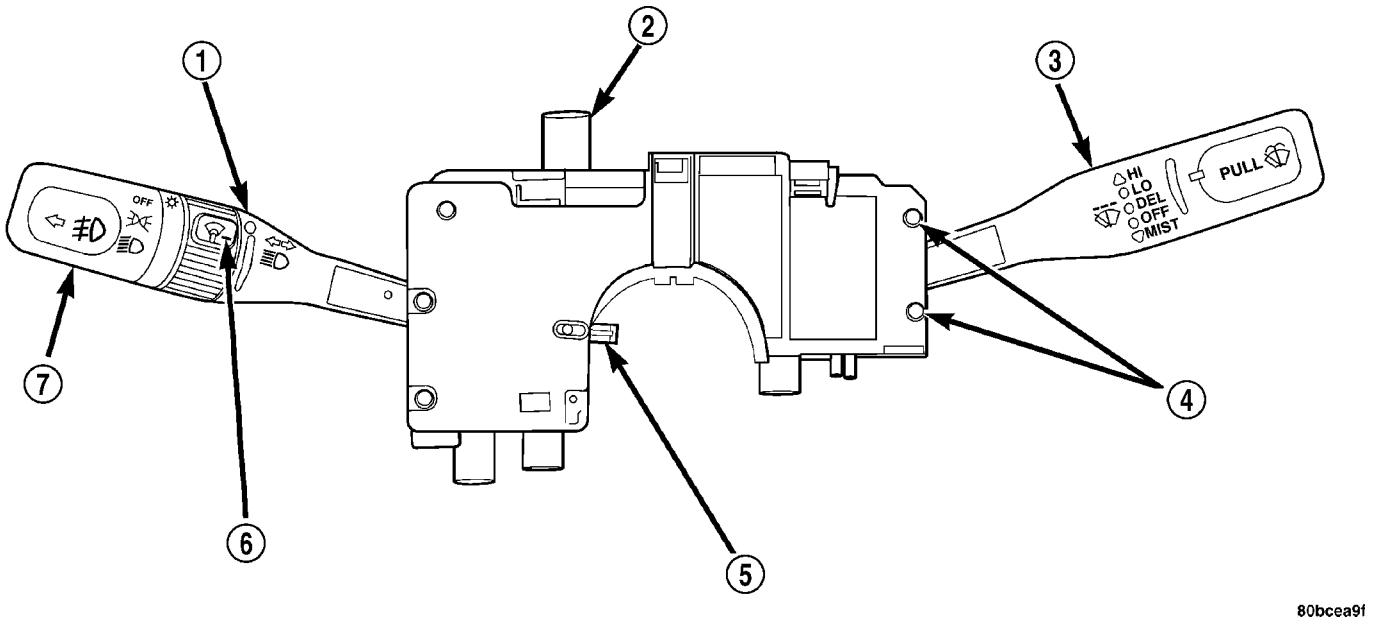

Fig. 1 FRONT WINDSHIELD WIPER/WASHER SWITCH LOCATION

1 - TURN SIGNAL CONTROL STALK
2 - HAZARD WARNING SWITCH
3 - WINDSHIELD WIPER/WASHER CONTROL
4 - WINDSHIELD WIPER/WASHER SWITCH RETAINING SCREWS
5 - CANCELLING CAM
6 - PANEL DIMMER/INTERIOR LIGHT SWITCH
7 - EXTERIOR LIGHTING CONTROL/FOG LAMP

FRONT WINDSHIELD WASHER SYSTEM

This vehicle is equipped with an electrically operated windshield washer pump. The washers are operated by a switch in the multi-function switch control lever (Fig. 1). The lever is located on the right side of the steering column.

The electric pump assembly is mounted directly to the reservoir. A permanently lubricated motor is coupled to an impeller type pump. The pump and reservoir are serviced as separate assemblies.

REAR WINDSHIELD WIPER SYSTEM

The driver controls an electrically operated intermittent rear wiper system with the switch located on the instrument panel accessory switch bezel. The rear wiper is controlled by ignition switched battery current through a fuse in the fuse block, and will operate only when the ignition switch is in the Accessory or ON positions.

The intermittent rear wiper system allows the driver to select an intermittent wipe mode. The intermittent wipe mode delay time has a fixed delay interval of about four seconds between sweeps. This system also has a wipe-after-wash feature that operates the rear wiper for as long as the washer pump is energized, then provides about two additional sweeps of the wiper after the washer pump is de-energized.

The rear wiper motor module operates on a separate non-switched battery current feed through a fuse in the fuse block.

The rear wiper system includes the following components:

- Rear wiper and washer switch.
- Rear wiper arm and blade.
- Rear wiper motor module.

REAR WINDSHIELD WASHER SYSTEM

The driver controls all rear washer system functions with the switch integral to the accessory switch bezel in the instrument panel. The rear washer system is controlled by ignition switched battery current through a fuse in the fuse block, and will operate only when the ignition switch is in the ACCESSORY or ON positions.

This system has a wipe-after-wash feature that operates the rear wiper for as long as the washer pump is energized, then provides about two additional sweeps of the wiper after the washer pump is de-energized.

The rear washer system shares the washer reservoir of the front windshield washer system. The front washer pump is a two way pump that is reversed depending on which switch is activated.

The rear washer system includes the following components:

- Washer reservoir and pump.
- Wiper and washer switch.
- Rear washer nozzle and plumbing.

WIPERS/WASHERS (Continued)

OPERATION

FRONT WINDSHIELD WIPER SYSTEM

Move the control lever up to select the desired wiper speed. Move the lever upward to the second detent for Low speed wiper operation, or to the third detent for High speed operation.

Use the intermittent wiper when weather conditions make a single wiping cycle, with a variable pause between cycles, desirable. Move the lever to the DEL position, then select the delay interval by turning the end of the lever. The delay can be regulated from a maximum of approximately 18 ± 0.5 seconds between cycles, to a cycle every second ± 0.5 second.

The windshield wipers will only operate with the ignition switch in the ACCESSORY or IGNITION RUN position. The wiper circuit is protected against over loads by a fuse in the fuse block and a circuit breaker within the wiper motor. This protects the circuitry of the wiper system and the vehicle. The wiper motor has permanent magnet fields.

The intermittent wiper delay mode has a range of 1 ± 0.5 to 18 ± 0.5 seconds. Pulse wipe is accomplished by holding stalk lever in the WASH position momentarily. The wiper blades then sweep once or twice after the WASH at low speed and then return to the previous wiper switch mode.

The wiper system completes the wipe cycle when the switch is turned OFF. The blades park in the lowest portion of the wipe pattern.

Push down on the wiper lever to activate a single wipe to clear off road mist or spray from a passing vehicle. As long as the lever is held down, the wipers will continue to operate.

FRONT WINDSHIELD WASHER SYSTEM

To use the washer, pull the stalk lever toward you and hold while spray is desired. If the stalk lever is pulled while in the delay range, the wiper will operate for two wipe cycles (± 1) after the stalk lever is released, and then resume the intermittent interval previously selected.

The wash function can be accessed in the OFF position of the wiper control switch. Pulling the washer stalk lever rearward when the switch is in the OFF position will operate the wipers and washer motor pump continuously until the stalk lever is released. Releasing the stalk lever will stop the washer pump but the wipers will complete the current wipe cycle followed by an average of two more wipe cycles (± 1) before the wipers park and the module turns off.

If the stalk lever is pulled while in the OFF position, the wipers will operate for two wipe cycles, then turn OFF.

Fluid, gravity fed from the reservoir, is forced by the pump through rubber hoses to the hood mounted nozzles which direct the fluid streams to the windshield.

REAR WINDSHIELD WIPER SYSTEM

A rocker switch located in the accessory switch bezel, below the radio turns the rear wiper ON or OFF. When this switch is pressed the rear wiper will operate at a fixed interval of about four seconds.

Press and hold the switch as long as spray is desired. If the switch is depressed while the wiper is ON, the wipers will operate for a few seconds after the switch is released then resume the previously set mode of intermittent wiper.

NOTE: The washers will stop spraying if the switch is pressed longer than 30 seconds.

REAR WINDSHIELD WASHER SYSTEM

The vehicle operator selects the rear washer system functions using the wiper and washer switch, which is located on the instrument panel, accessory switch bezel. The instrument panel switch provides a hard wired ignition switched battery current feed to the rear washer pump for the washer system function.

Press and hold the switch as long as spray is desired. If the switch is depressed while the wiper is ON, the wipers will operate for a few seconds after the switch is released then resume the previously set mode of intermittent wiper.

NOTE: The washers will stop spraying if the switch is pressed longer than 30 seconds.

DIAGNOSIS AND TESTING

DIAGNOSIS AND TESTING - FRONT WIPER CONDITIONS

The following is a list of general wiper motor system problems, the tests that are to be performed to locate the faulty part, and the corrective action to be taken.

Whatever the problem, disconnect motor wire harness and clean the terminals, then connect motor wire harness and test.

Refer to Wiring Diagrams for circuit information and connector call-outs.

MOTOR WILL NOT OPERATE ALL SWITCH POSITIONS

(1) Check fuse 1, in the fuse block (Fig. 2).
  (a) If fuse is OK, go to Step 2.

WIPERS/WASHERS (Continued)

(b) If fuse is defective, replace and check motor operation in all switch positions.

(c) If motor is still inoperative and the fuse does not blow, go to Step 2.

(d) If replacement fuse blows, go to Step 6.

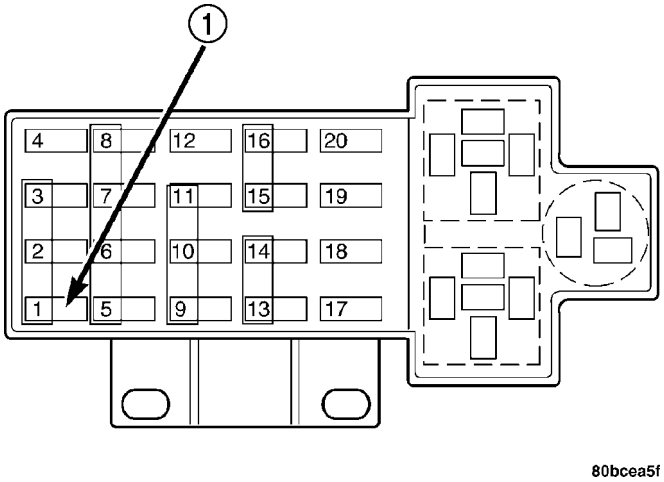

Fig. 2 FUSE BLOCK

1 - FUSE 1 WIPER

(2) Disconnect motor harness connector.

(3) Check motor low speed. Using two jumper wires, connect one jumper wire between the battery positive terminal and terminal 4 of the motor connector. Connect the other jumper wire to the battery negative terminal and terminal 1 of the motor (Fig. 3). Check motor high speed, connect the positive jumper wire to terminal 5 of the motor connector. Connect the negative jumper wire to terminal 1 of the motor.

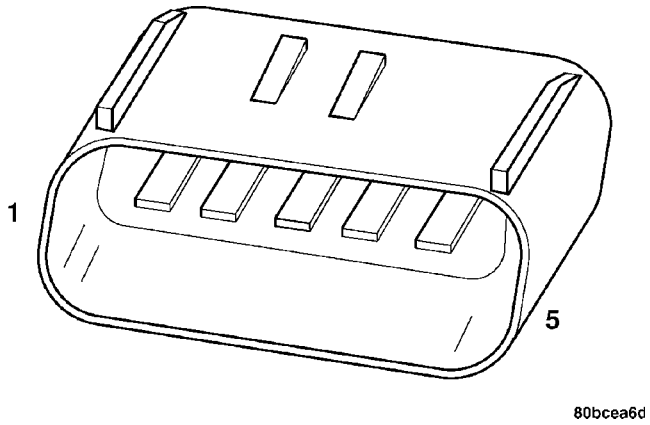

Fig. 3 WINDSHIELD WIPER MOTOR CONNECTOR

(a) If motor does not run in high or low speed go to Step 4.

(b) If motor does run, go to Step 5.

(4) Using an ohmmeter, check for good ground at terminal 1 of the motor. If OK, replace motor. If not repair the ground circuit as necessary.

(5) Check terminal 2 of wiper switch connector for continuity to ground. If OK, go to Step 6. If not OK, repair the ground circuit as necessary.

(6) Using a voltmeter, with wiper switch connected, connect negative lead to terminal 1 of the motor. Connect the positive lead to terminal 4 of the wiper switch connector (Fig. 4).

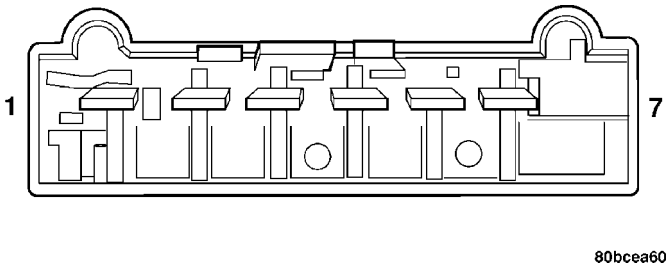

Fig. 4 WIPER/WASHER SWITCH CONNECTOR

(a) If no voltage, repair wiring as necessary. If OK, go to Step b.

(b) Check wiper switch low speed. Connect voltmeter positive lead to terminal 6 of the wiper switch connector. Move wiper stalk to LOW position. If no voltage, replace switch.

(c) Check wiper switch high speed, connect voltmeter positive lead to terminal 5 of the wiper switch connector. Move wiper stalk to HIGH position. If no voltage, replace switch.

(7) Disconnect motor connector and replace fuse 1 in fuse block.

(a) If fuse does not blow, replace motor.

(b) If fuse blows, disconnect wiper switch and replace fuse.

(c) If fuse does not blow, replace switch.

(d) If fuse blows, repair wiring as necessary.

MOTOR OPERATES SLOWLY AT ALL SPEEDS

(1) Remove wiper arms and cowl screen. Disconnect motor linkage from motor. Connect an ammeter between battery positive terminal and terminal 4 of the motor connector. Turn wiper motor on and check ampere reading.

If motor runs and ammeter reading is more than 6 amps, go to Step 2. If less than 6 amps, go to Step 3.

(2) Using an ohmmeter, check the high and low circuits for a short to ground. Refer to Wiring Diagrams.

(3) Check to see if wiper linkage or pivots are binding or caught.

WIPERS RUN AT HIGH SPEED WITH SWITCH IN LOW SPEED POSITION OR WIPERS RUN AT LOW SPEED WITH SWITCH IN HIGH SPEED POSITION.

(1) Check for crossed wires in harness connector from wiper switch to motor.

(2) If OK, replace wiper switch.

WIPERS/WASHERS (Continued)

WIPERS WILL OPERATE CONTINUOUSLY WITH THE SWITCH IN THE INTERMITTENT POSITION - WHEN WIPER SWITCH IS TURNED OFF, WIPERS STOP WHEREVER THEY ARE WITHOUT RETURNING TO PARK POSITION.

(1) Check at terminal 1 of the motor for a good ground.

(2) Turn ignition switch OFF. Disconnect the wiper switch harness connector. Using an ohmmeter with the motor in the park position, check for continuity between terminal 2 of the wiper switch harness connector (Fig. 5) and terminal 1 of the motor. If continuity, replace wiper switch. If no continuity, repair wiring as necessary.

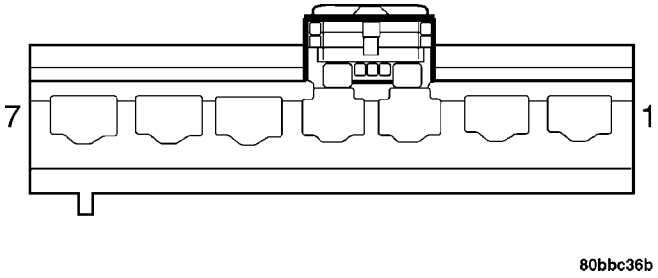

Fig. 5 WINDSHIELD WIPER SWITCH HARNESS CONNECTOR

WIPERS DO NOT OPERATE WHEN WASHER MOTOR IS ENGAGED (PULSE WIPE) OR WIPERS DO OPERATE IN INTERMITTENT POSITION.

Check for a good ground at terminal 1 of the motor and at wiper switch terminal 2. If OK, replace wiper switch. If not OK, repair wiring as necessary.

DIAGNOSIS AND TESTING - REAR WIPER SYSTEM

The rear window wiper system operates in several modes:

- Intermittent wipe.
- Wash
- Wipe after wash.

(1) Check the fused B(+) fuse in the fuse block. If OK, go to Step 2. If not OK, repair the shorted circuit or component as required and replace the faulty fuse.

(2) Check for battery voltage at the fused B(+) fuse in the fuse block. If OK, go to Step 3. If not OK, repair the open fused B(+) circuit to the Power Distribution Center (PDC) fuse as required.

(3) Check the fused ignition switch output (run/accessory) fuse in the fuse block. If OK, go to Step 4. If not OK, repair the shorted circuit or component as required and replace the faulty fuse.

(4) Turn the ignition switch to the On position. Check for battery voltage at the fused ignition switch output (RUN/ACCESSORY) fuse in the fuse block. If OK, turn the ignition switch to the Off position and go to Step 5. If not OK, repair the open fused ignition switch output (RUN/ACCESSORY) circuit to the ignition switch as required.

(5) Disconnect and isolate the battery negative cable. Disconnect the rear windshield wiper/washer switch wire harness connector. Reconnect the battery negative cable. Turn the ignition switch to the ON position. Check for battery voltage at the fused ignition switch output (RUN/ACCESSORY) circuit cavity of the instrument panel wire harness connector for the rear windshield wiper and washer switch. If OK, go to Step 6. If not OK, repair the open fused ignition switch output (RUN/ACCESSORY) circuit to the fuse block fuse as required.

(6) Turn the ignition switch to the OFF position. Disconnect and isolate the battery negative cable.

(7) Remove the liftgate inner trim panel. Disconnect the liftgate wire harness connector from the rear wiper motor. Check for continuity between the ground circuit cavity of the liftgate wire harness connector for the rear wiper motor and a good ground. There should be continuity. If not OK, repair the open ground circuit to ground as required.

(8) Reconnect the battery negative cable. Check for battery voltage at the fused B(+) circuit cavity of the liftgate wire harness connector for the rear wiper motor. If not OK, repair the open fused B(+) circuit to the fuse block fuse as required.

(9) Turn the rear wiper switch to the ON position. Check for battery voltage at the rear wiper motor control circuit cavity of the liftgate wire harness connector. If OK, replace the faulty rear wiper motor. If not OK, repair the open rear wiper motor control circuit to the wiper and washer switch as required.

DIAGNOSIS AND TESTING - WASHER SYSTEM

Whenever a windshield washer malfunction occurs, first verify that the washer pump connector and the multi-function switch, front wiper/washer switch connector is properly connected before starting diagnosis and testing. Also check the rear wiper/washer switch connection. Refer to WASHER SYSTEM TEST table.

WIPERS/WASHERS (Continued)

WASHER SYSTEM TEST

CONDITION	POSSIBLE CAUSES	CORRECTION
PUMP RUNS NO FLUID FLOWING.	1. NO FLUID IN THE RESERVOIR.	1. FILL RESERVOIR.
	2. NOZZLE PLUGGED OR FROZEN.	2. THAW AND CHECK FLOW IF BLOCKED
	3. BROKEN, LOOSE OR PINCHED HOSE.	3. CHECK FLOW THROUGH HOSE CONNECTIONS.
	4. FAULTY PUMP.	4. APPLY BATTERY VOLTAGE TO MOTOR TERMINALS, REPLACE IF PUMP DOES NOT RUN.
SYSTEM OPERATES INTERMITTENTLY.	1. LOOSE WIRE CONNECTION.	1. CHECK WIRE CONNECTIONS.
	2. FAULTY SWITCH.	2. DISCONNECT WIRE HARNESS USE VOLTMETER TO CHECK SWITCH.
SYSTEM OUTPUT IS LOW.	1. PINCHED HOSE.	1. CHECK FLOW THROUGH HOSE CONNECTION.
	2. HOSE BLOCKED.	2. DISCONNECT HOSE AT NOZZLE CHECK FOR FLOW. REPLACE AS NECESSARY.

FRONT WASHER NOZZLE

REMOVAL

(1) Open hood.

(2) Remove the underhood, rear hood silencer pad fasteners.

(3) Disconnect the washer hose from the underside of the front washer nozzle.

(4) Lower hood down.

(5) Using a plastic body filler spreader or equivalent (credit card), gently place it underneath the front of the washer nozzle. Be careful not to damage the hood seal underneath the nozzle (Fig. 6).

(6) Rock the nozzle back and forth slightly to release it from the hood panel.

INSTALLATION

(1) Place the nozzle into hood opening and snap into place.

(2) Open hood.

(3) Connect the washer hose to the underside of the washer nozzle.

(4) After connecting hose, check for proper system function and to assure leak free connections by actuating the front washer system switch from inside of vehicle.

(5) Install the underhood, rear hood silencer pad fasteners.

(6) Close hood.

(7) Verify system operation.

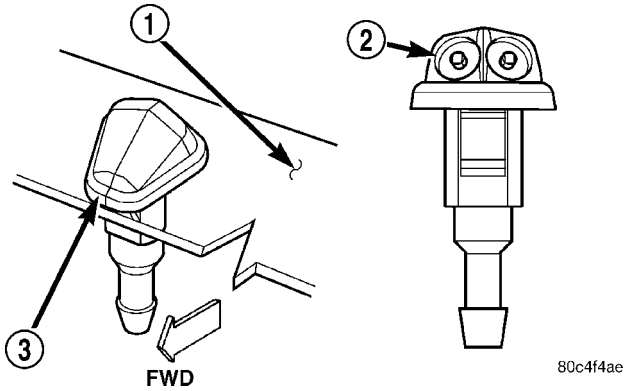

Fig. 6 FRONT WASHER NOZZLE

1 - HOOD
2 - ADJUST WITH A PIN
3 - NOZZLE

FRONT WIPER ARMS

REMOVAL

(1) Place the wiper arm/blades in the PARK position and turn ignition OFF.

(2) Open hood.

(3) Using a trim stick (special tool #C-4755) or equivalent, gently pry up on the wiper arm nut cap and remove (Fig. 7).

(4) Remove wiper arm retaining nut (Fig. 7).

(5) Remove the arm from the pivot using a rocking motion while the arm is in an over/centered position (Fig. 7).

(6) Clean metal splinters OFF the pivot shafts.

FRONT WIPER ARMS (Continued)

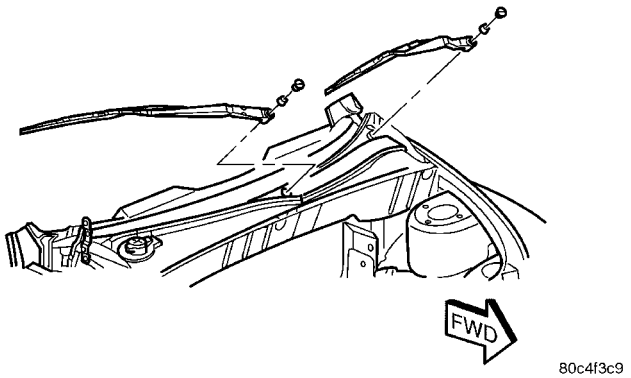

Fig. 7 FRONT WIPER ARM - REMOVE/INSTALL

INSTALLATION

Before installation activate wiper system to ensure the wiper module is in the PARK position. Position wiper arms so that the tip of the driver's blade and the middle of the passenger's blade is on the park line on the windshield. Refer to Adjustments in this section for Wiper Arm Adjustment.

(1) Place the arm on the pivot while the arm is in an over/centered position (Fig. 7).

(2) Install the wiper arm retaining nut (Fig. 7)and torque to 21 N·m (190 in. lbs.).

(3) Install the wiper arm nut cap (Fig. 7).

(4) Close hood.

(5) Verify system operation.

ADJUSTMENTS

ADJUSTMENT - FRONT WIPER ARMS

(1) Open hood.

(2) Using a trim stick (special tool #C-4755) or equivalent, gently pry up on the wiper arm nut cap and remove (Fig. 7).

(3) Remove wiper arm retaining nut (Fig. 7).

(4) Remove the arm from the pivot using a rocking motion while the arm is in an over/centered position (Fig. 7).

(5) The wiper blade should be within the tolerance shown by the tick mark. The park line or tick mark, is on the windshield (Fig. 8).

NOTE: In the event that the wiper blade tip excessively strikes the cowl screen due to long term normal wear, reposition the wiper blade tip slightly above the park line. Make sure that the wipers are in the PARK position.

(6) Place the arm on the pivot while the arm is in an over/centered position (Fig. 7).

(7) Install the wiper arm retaining nut (Fig. 7)and torque to 21 N·m (190 in. lbs.).

(8) Install the wiper arm nut cap (Fig. 7).

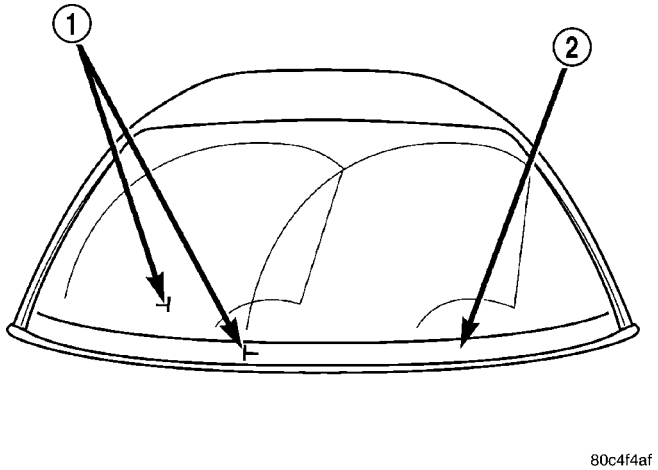

Fig. 8 WIPER BLADE/ARM PARK LINES

1 - PARK LINES
2 - BLACK OUT AREA

(9) Close hood.

(10) Verify system operation.

ADJUSTMENT - FRONT WIPER ARMS - RHD

(1) Open hood.

(2) Using a trim stick (special tool #C-4755) or equivalent, gently pry up on the wiper arm nut cap and remove (Fig. 7).

(3) Remove wiper arm retaining nut (Fig. 7).

(4) Remove the arm from the pivot using a rocking motion while the arm is in an over/centered position (Fig. 7).

(5) The wiper blade should be parked within the tolerance shown by the tick mark. The park line, or tick mark, is on the windshield (Fig. 9).

NOTE: In the event that the wiper blade tip excessively strikes the cowl screen due to long term normal wear, reposition the wiper blade heel slightly above the park line. Make sure that the wipers are in the PARK position.

(6) Place the arm on the pivot while the arm is in an over/centered position (Fig. 7).

(7) Install the wiper arm retaining nut (Fig. 7) and torque to 21 N·m (190 in. lbs.).

(8) Install the wiper arm nut cap (Fig. 7).

(9) Close hood.

(10) Verify vehicle and system operation.

FRONT WIPER BLADES

REMOVAL

(1) Lift wiper arm to the over center position.

FRONT WIPER BLADES (Continued)

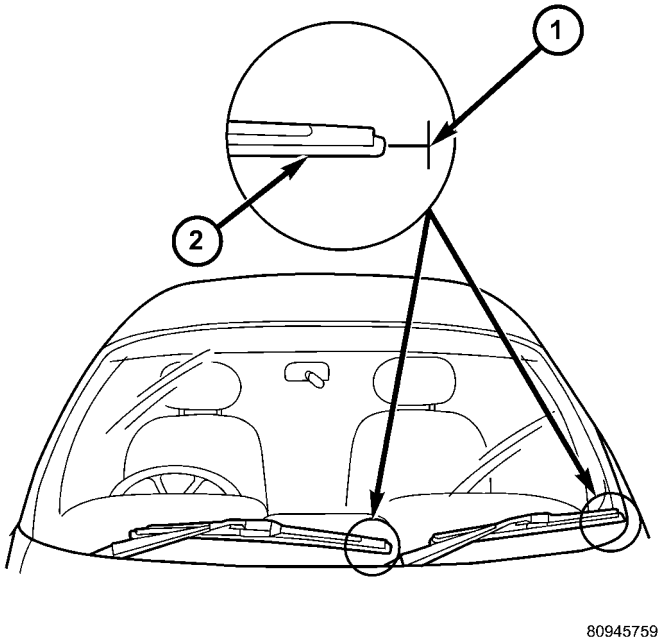

Fig. 9 WIPER BLADE/ARM PARK LINES - RHD

1 - ALIGNMENT TOLERANCE ON WINDSHIELD
2 - WIPER BLADE

(2) Remove blade assembly from arm by pushing release tab under arm tip and slide blade away from arm tip (Fig. 10).

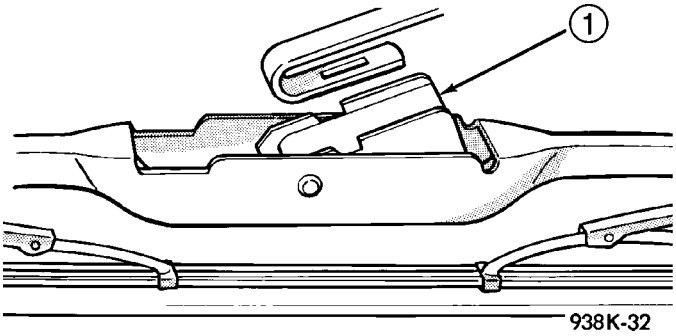

Fig. 10 FRONT WIPER BLADE - REMOVE/INSTALL

1 - RELEASE TAB

(3) Gently place wiper arm tip on glass surface.

CLEANING - FRONT WIPER BLADES

Wiper blades exposed to the weather for a long period of time tend to lose their wiping effectiveness. Periodic cleaning of the wiper blade is recommended to remove the accumulation of salt and road grime. The wiper blades, arms and windshield should be cleaned with a sponge or cloth and a mild detergent or nonabrasive cleaner. If the wiper blades continue to streak or smear, they should be replaced. The wiper blade should run smoothly across the windshield in both directions. The wiper blade should slightly roll over center when the blade reverses direction. A wiper blade insert that has lost flexibility or a wiper arm that has lost spring tension, will cause the blade to skip or chatter across the windshield. If the wiper blades are new and the wiper arm spring tension is OK and a chattering sound is emitted from the wiper(s), the wiper blade is not rolling over center. If this condition exists (Refer to 8 - ELECTRICAL/WIPERS/WASHERS/WIPER ARMS - ADJUSTMENTS).

INSTALLATION

(1) Install blade assembly on arm by sliding the blade into the arm tip until it clicks (Fig. 10).
(2) Let wiper arm/blade rest on front windshield.
(3) Verify system operation.

FRONT WIPER BLADE ELEMENTS

REMOVAL

(1) Lift wiper arm to raise blade off glass.
(2) Remove blade assembly from arm by pushing release tab under arm tip and slide blade away from arm tip (Fig. 10).
(3) Let wiper arm rest on front windshield.
(4) Remove wiping element from blade assembly. Pull pocket of the rubber element out of the end of the claw together with vertebra (metal rails) (Fig. 11).

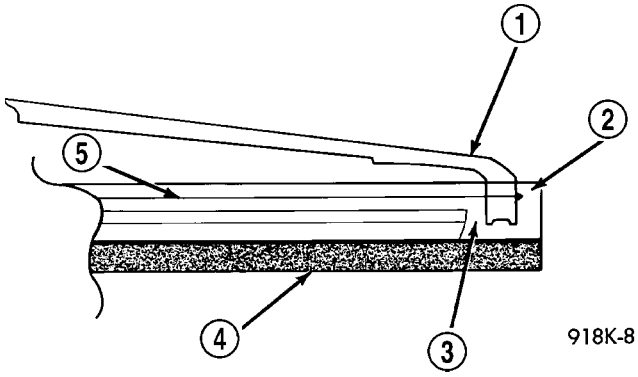

Fig. 11 WIPER BLADE ELEMENT - TYPICAL

1 - CLAW
2 - TO GRASP AND PULL
3 - CHANNEL
4 - RUBBER ELEMENT
5 - VERTABRA

INSTALLATION

After Installation, check that the element and vertebra are through all claws and the final claw is locked in the pocket.

FRONT WIPER BLADE ELEMENTS (Continued)

(1) Install wiping element into blade assembly. Push pocket of the rubber element in the end claw together with vertebra (metal rails) (Fig. 11).

(2) Install blade assembly on arm by pushing tab under the hook on the arm tip and slide blade into arm tip (Fig. 10).

(3) Let wiper arm/blade rest on front windshield.

(4) Verify system operation.

FRONT WIPER MODULE

REMOVAL

(1) Open hood.

(2) Disconnect and isolate the battery negative cable (Fig. 12).

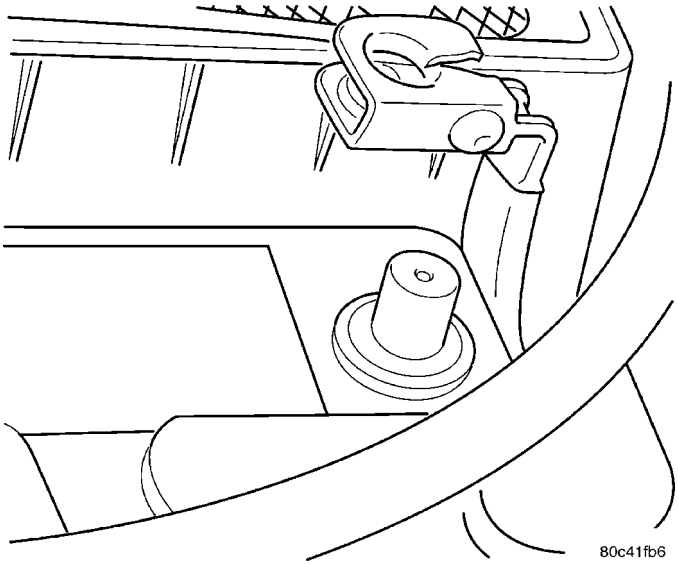

Fig. 12 BATTERY NEGATIVE CABLE - REMOVE/ INSTALL

(3) Using a trim stick (special tool #C-4755) or equivalent, gently pry up on the wiper arm nut cap and remove (Fig. 7).

(4) Remove wiper arm retaining nut (Fig. 7).

(5) Remove the arm from the pivot using a rocking motion while the arm is in an over/centered position (Fig. 7).

(6) Remove the cowl cover. The right side cover overlaps the left side cover, so they both must be removed.

(a) Remove the rear engine compartment seal at the cowl.

(b) Remove the four push retainers to the right side cowl cover and remove from vehicle.

(c) Remove the three push retainers to the left side cowl cover and remove from vehicle.

(7) Disconnect front wiper motor posi-lock harness connector.

(8) Remove three front wiper module mounting bolts and remove module from vehicle (Fig. 13).

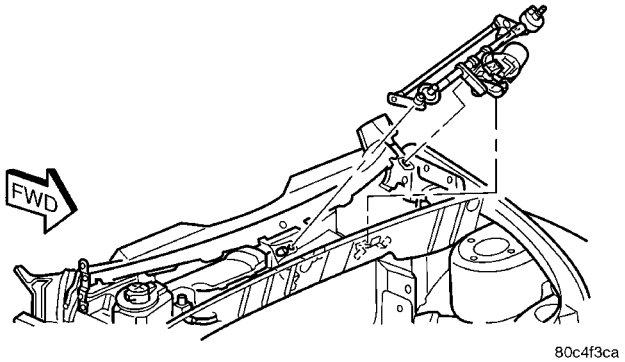

Fig. 13 FRONT WIPER MODULE - REMOVE/INSTALL

NOTE: If replacing the front wiper linkage, the wiper motor must be transferred to the new linkage.

- **Disconnect drive link from motor crank ball joint.**
- **Remove three bolts to the front wiper motor and separate from linkage.**

INSTALLATION

NOTE: If the front wiper linkage was replaced, install the wiper motor on the new linkage.

- **Place the motor on the front wiper module and install the three bolts to the front windshield wiper motor.**
- **Reconnect drive link to motor crank ball joint.**

(1) Place the front wiper module into cowl area and install the three mounting bolts (Fig. 13). Torque the mounting screws to 8 N·m (75 in. lbs.).

(2) Connect the front wiper motor posi-lock harness connector.

(3) Install the cowl cover. The right side cover overlaps the left side cover.

(a) Place the left side cowl cover into position and install the three push retainers.

(b) Place the right side cowl cover into position and install the four push retainers.

(c) Install the rear engine compartment seal at the cowl.

Before installation of the front wiper arms, activate the wiper system to ensure the front wiper module is in the PARK position. Position wiper arms so that the tip of the driver's blade and the middle of the passenger's blade is on the park line on the windshield (Refer to 8 - ELECTRICAL/WIPERS/WASHERS/WIPER ARMS - ADJUSTMENTS).

(4) Place the arm on the pivot while the arm is in an over/centered position (Fig. 7).

FRONT WIPER MODULE (Continued)

(5) Install the wiper arm retaining nut (Fig. 7) and torque to 21 N·m (190 in. lbs.).
(6) Install the wiper arm nut cap (Fig. 7).
(7) Connect the battery negative cable (Fig. 12).
(8) Close hood.
(9) Verify vehicle and system operation.

FRONT WIPER MODULE - RHD

REMOVAL

(1) Open hood.
(2) Disconnect and isolate the battery negative cable (Fig. 12).
(3) Using a trim stick (special tool #C-4755) or equivalent, gently pry up on the wiper arm nut cap and remove (Fig. 7).
(4) Remove wiper arm retaining nut (Fig. 7).
(5) Remove the arm from the pivot using a rocking motion while the arm is in an over/centered position (Fig. 7).
(6) Remove the cowl cover. The right side cover overlaps the left side cover, so they both must be removed.
(a) Remove the rear engine compartment seal at the cowl.
(b) Remove the four push retainers to the right side cowl cover and remove from vehicle.
(c) Remove the three push retainers to the left side cowl cover and remove from vehicle.
(7) Disconnect front wiper motor posi-lock harness connector.
(8) Remove three front wiper module mounting bolts and remove module from vehicle (Fig. 14).

NOTE: If replacing the front wiper linkage, the wiper motor must be transferred to the new linkage.

- **Disconnect drive link from motor crank ball joint.**
- **Remove three bolts to the front wiper motor and separate from linkage.**

INSTALLATION

NOTE: If the front wiper linkage was replaced, install the wiper motor on the new linkage.

- **Place the motor on the wiper linkage and install the three bolts to the front wiper motor.**
- **Reconnect drive link to motor crank ball joint.**

(1) Place the front wiper module into cowl area and install the three mounting bolts (Fig. 14). Torque the mounting screws to 8 N·m (75 in. lbs.).
(2) Connect the front wiper motor posi-lock harness connector.

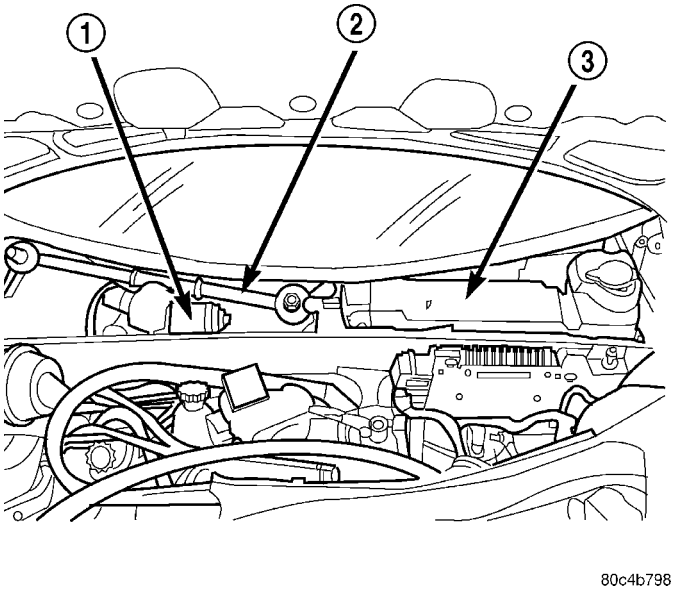

Fig. 14 FRONT WIPER MODULE - RHD - REMOVE/ INSTALL

1 - WIPER MOTOR
2 - WIPER MOTOR MODULE
3 - RESERVOIR

(3) Install the cowl cover. The right side cover overlaps the left side cover.
(a) Place the left side cowl cover into position and install the three push retainers.
(b) Place the right side cowl cover into position and install the four push retainers.
(c) Install the rear engine compartment seal at the cowl.

Before installation of the front wiper arms, activate the wiper system to ensure the front wiper module is in the PARK position. Position wiper arms so that the tip of the driver's blade and the middle of the passenger's blade is on the park line on the windshield (Refer to 8 - ELECTRICAL/WIPERS/WASHERS/WIPER ARMS - ADJUSTMENTS).

(4) Place the arm on the pivot while the arm is in an over/centered position (Fig. 7).
(5) Install the wiper arm retaining nut (Fig. 7) and torque to 21 N·m (190 in. lbs.).
(6) Install the wiper arm nut cap (Fig. 7).
(7) Connect the battery negative cable (Fig. 12).
(8) Close hood.
(9) Verify vehicle and system operation.

FRONT WIPER MOTOR

DIAGNOSIS AND TESTING - WIPER MOTOR

Whenever a wiper motor malfunction occurs, verify that the wire harness is properly connected, then start normal diagnosis and repair procedures. Refer to the WIPER MOTOR DIAGNOSIS table.

FRONT WIPER MOTOR (Continued)

WIPER MOTOR DIAGNOSIS

CONDITION	POSSIBLE CAUSES	CORRECTION
WIPER BLADES DO NOT PARK PROPERLY.	(1) WIPER ARMS IMPROPERLY PARKED.	(1) REMOVE WIPER ARMS AND REPARK. REFER TO ELECTRICAL, WIPERS/WASHERS, WIPER ARM, REMOVAL.
	(2) WIPER ARMS ARE LOOSE ON PIVOT SHAFT.	(2) REMOVE WIPER ARM AND REPARK. REFER TO ELECTRICAL, WIPERS/WASHERS, WIPER ARM, REMOVAL.
	(3) MOTOR CRANK LOOSE AT OUTPUT SHAFT.	(3) REMOVE WIPER ARM, RUN WIPER MOTOR TO PARK POSITION AND REMOVE THE MODULE. WITHOUT ROTATING THE MOTOR OUTPUT SHAFT, REMOVE THE CRANK AND CLEAN ANY FOREIGN MATTER FROM THE MOTOR SHAFT. INSTALL THE MOTOR CRANK IN ITS ORIGINAL POSITION.
MOTOR STOPS IN ANY POSITION WHEN THE SWITCH IS TURNED OFF.	(1) OPEN PARK CIRCUIT.	(1) CHECK PARK SWITCH BY DISCONNECTING THE WIRE CONNECTOR. PLACE A JUMPER WIRE FROM PIN 2 TO PIN 4. APPLY BATTERY VOLTAGE TO PIN 3 AND THEN TO PIN 1. REPLACE MOTOR IF IT DOES NOT PARK.
MOTOR WILL NOT STOP WHEN THE SWITCH IS TURNED OFF.	(1) FAULTY SWITCH.	(1) CHECK SWITCH IN LOW, HIGH AND INTERMITTENT POSITION.
WIPER BLADES SLAP AGAINST COWL SCREEN OR WINDOW MOLDINGS.	(1) WIPER ARMS ARE PARKED INCORRECTLY.	(1) PARK WIPER ARMS. REFER TO WIPER ARM ADJUSTMENT.
BLADES CHATTER.	(1) FOREIGN SUBSTANCE SUCH AS POLISH ON GLASS OR BLADES.	(1) CLEAN GLASS AND BLADE ELEMENT WITH NON-ABRASIVE CLEANER.
	(2) ARMS TWISTED, BLADE AT WRONG ANGLE ON GLASS.	(2) REPLACE ARM.
	(3) BLADE STRUCTURE BENT.	(3) REPLACE BLADE.
	(4) BLADE ELEMENT HAS PERMANENT SET.	(4) REPLACE BLADE ELEMENT.
WIPER KNOCK AT REVERSAL.	(1) LINKAGE BUSHINGS WORN.	(1) REPLACE WORN LINK. REFER TO ELECTRICAL, WIPERS/WASHERS, WIPER LINKAGE, REMOVAL.
	(2) ARMATURE ENDPLAY IN MOTOR.	(2) REPLACE WIPER MOTOR. REFER TO ELECTRICAL, WIPERS/WASHERS, WIPER MOTOR REMOVAL.

FRONT WIPER MOTOR (Continued)

CONDITION	POSSIBLE CAUSES	CORRECTION
WIPER MOTOR WILL NOT RUN.	(1) BLOWN FUSE.	(1) REPLACE FUSE, AND RUN SYSTEM.
	(2) NEW FUSE BLOWS.	(2) CHECK FOR SHORT IN WIRING OR SWITCH.
	(3) NEW FUSE BLOWS.	(3) REPLACE FUSE, REMOVE MOTOR CONNECTOR, TURN SWITCH ON, FUSE DOES NOT BLOW, REPLACE MOTOR.
	(4) NO VOLTAGE AT MOTOR.	(4) CHECK SWITCH AND WIRING HARNESS. REFER TO WIRING DIAGRAMS.
	(5) POOR GROUND.	(5) REPAIR GROUND WIRE CONNECTION AS NECESSARY.

REMOVAL

To service the front wiper motor, the front wiper module must first be removed.

(1) Open hood.

(2) Disconnect and isolate the battery negative cable (Fig. 12).

(3) Using a trim stick (special tool #C-4755) or equivalent, gently pry up on the wiper arm nut cap and remove (Fig. 7).

(4) Remove wiper arm retaining nut (Fig. 7).

(5) Remove the arm from the pivot using a rocking motion while the arm is in an over/centered position (Fig. 7).

(6) Remove the cowl cover. The right side cover overlaps the left side cover, so they both must be removed.

(a) Remove the rear engine compartment seal at the cowl.

(b) Remove the four push retainers to the right side cowl cover and remove from vehicle.

(c) Remove the three push retainers to the left side cowl cover and remove from vehicle.

(7) Disconnect front wiper motor posi-lock harness connector.

(8) Remove three front wiper module mounting bolts and remove module from vehicle (Fig. 14).

(9) Disconnect drive link to motor crank ball joint.

(10) Remove three bolts to the front wiper motor and separate from module.

INSTALLATION

(1) Place the motor on the wiper linkage and install the three bolts to the front wiper motor.

(2) Reconnect the drive link to the motor crank ball joint.

(3) Place the front wiper module into cowl area and install the three mounting bolts (Fig. 14). Torque the mounting screws to 8 N·m (75 in. lbs.).

(4) Connect the front wiper motor posi-lock harness connector.

(5) Install the cowl cover. The right side cover overlaps the left side cover.

(a) Place the left side cowl cover into position and install the three push retainers.

(b) Place the right side cowl cover into position and install the four push retainers.

(c) Install the rear engine compartment seal at the cowl.

Before installation of the front wiper arms, activate the wiper system to ensure the front wiper module is in the PARK position. Position wiper arms so that the tip of the driver's blade and the middle of the passenger's blade is on the park line on the windshield (Refer to 8 - ELECTRICAL/WIPERS/WASHERS/WIPER ARMS - ADJUSTMENTS).

(6) Place the arm on the pivot while the arm is in an over/centered position (Fig. 7).

(7) Install the wiper arm retaining nut (Fig. 7) and torque to 21 N·m (190 in. lbs.).

(8) Install the wiper arm nut cap (Fig. 7).

(9) Connect the battery negative cable (Fig. 12).

(10) Close hood.

(11) Verify vehicle and system operation.

FRONT WIPER MOTOR - RHD

REMOVAL

To service the front wiper motor, the front wiper module must first be removed.

(1) Open hood.

(2) Disconnect and isolate the battery negative cable (Fig. 12).

(3) Using a trim stick (special tool #C-4755) or equivalent, gently pry up on the wiper arm nut cap and remove (Fig. 7).

(4) Remove wiper arm retaining nut (Fig. 7).

(5) Remove the arm from the pivot using a rocking motion while the arm is in an over/centered position (Fig. 7).

FRONT WIPER MOTOR - RHD (Continued)

(6) Remove the cowl cover. The right side cover overlaps the left side cover, so they both must be removed.

(a) Remove the rear engine compartment seal at the cowl.

(b) Remove the four push retainers to the right side cowl cover and remove from vehicle.

(c) Remove the three push retainers to the left side cowl cover and remove from vehicle.

(7) Disconnect front wiper motor posi-lock harness connector.

(8) Remove three front wiper module mounting bolts (Fig. 14) and remove module from vehicle.

(9) Disconnect drive link from motor crank ball joint.

(10) Remove three bolts to the front wiper motor and separate from linkage.

INSTALLATION

(1) Place the motor on the wiper linkage and install the three bolts to the front wiper motor.

(2) Connect drive link to motor crank ball joint.

(3) Place the front wiper module into cowl area and install the three mounting bolts. Torque the mounting screws to 8 N·m (75 in. lbs.).

(4) Connect the front wiper motor posi-lock harness connector.

(5) Install the cowl cover. The right side cover overlaps the left side cover.

(a) Place the left side cowl cover into position and install the three push retainers.

(b) Place the right side cowl cover into position and install the four push retainers.

(c) Install the rear engine compartment seal at the cowl.

Before installation of the front wiper arms, activate the wiper system to ensure the front wiper module is in the PARK position. Position wiper arms so that the tip of the driver's blade and the middle of the passenger's blade is on the park line on the windshield (Refer to 8 - ELECTRICAL/WIPERS/WASHERS/WIPER ARMS - ADJUSTMENTS).

(6) Place the arm on the pivot while the arm is in an over/centered position (Fig. 7).

(7) Install the wiper arm retaining nut (Fig. 7) and torque to 21 N·m (190 in. lbs.).

(8) Install the wiper arm nut cap (Fig. 7).

(9) Connect the battery negative cable (Fig. 12).

(10) Close hood.

(11) Verify vehicle and system operation.

FRONT WIPER SWITCH

DIAGNOSIS AND TESTING - FRONT WIPER/WASHER SWITCH

Refer to FRONT WIPER/WASHER SWITCH CONTINUITY TEST table and (Fig. 15).

FRONT WIPER/WASHER SWITCH CONTINUITY TEST

MODE	CONTINUITY BETWEEN
OFF	PIN C-1 AND C-6
LOW/MIST	PIN C-4 AND C-6
HIGH	PIN C-4 AND C-5
WASH	PIN C-4 AND C-3
INTERMITTENT	CANNOT BE CHECKED

REMOVAL

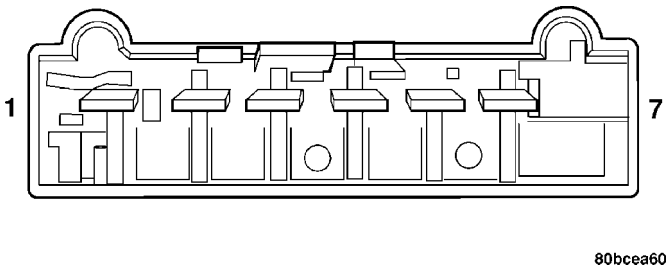

Fig. 15 WIPER/WASHER SWITCH CONNECTOR (C)

To service the front wiper/washer switch, the multi-function switch must first be removed.

(1) Open hood.

(2) Disconnect and isolate the battery negative cable (Fig. 12).

(3) Remove both upper and lower steering column shrouds (Refer to 19 - STEERING/COLUMN/UPPER SHROUD - REMOVAL).

(4) Disconnect both posi-lock harness connectors at the rear of the multi-function switch (Fig. 16)

(5) Remove multi-function switch mounting screws (Fig. 16)and remove switch from vehicle.

(6) Remove the two torx screws retaining the wiper/washer switch to the multi-function switch and separate (Fig. 17).

INSTALLATION

To service the front wiper/washer switch, the multi-function switch must first be removed.

(1) Place new wiper/washer switch next to the multi-function switch and install two screws (Fig. 17).

(2) Place the multi-function switch into place and install the two mounting screws (Fig. 16). Torque multi-function switch to column retaining screws to 3 N·m (27 in. lbs.).

FRONT WIPER SWITCH (Continued)

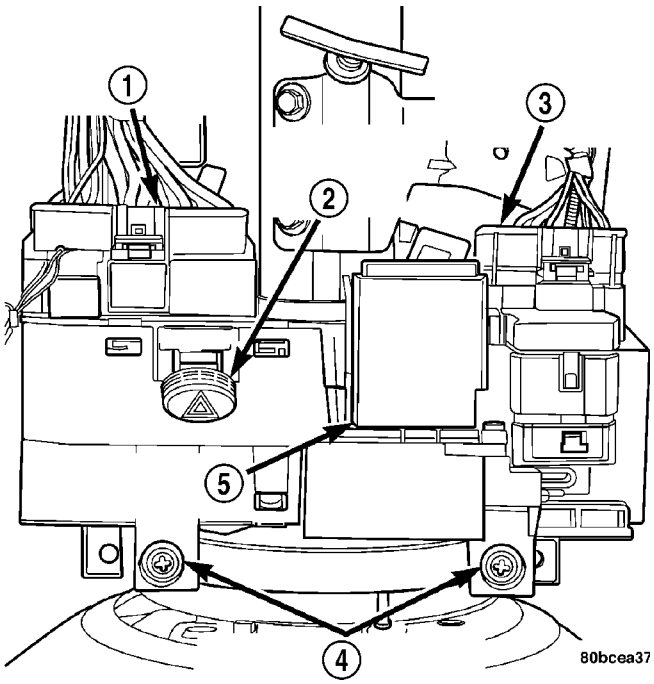

Fig. 16 MULTI-FUNCTION SWITCH - REMOVE/ INSTALL

1 - MULTI-FUNCTION SWITCH CONNECTOR
2 - HAZARD/WARNING SWITCH
3 - WINDSHIELD WIPER/WASHER SWITCH CONNECTOR
4 - MOUNTING SCREWS
5 - COMBINATION FLASHER

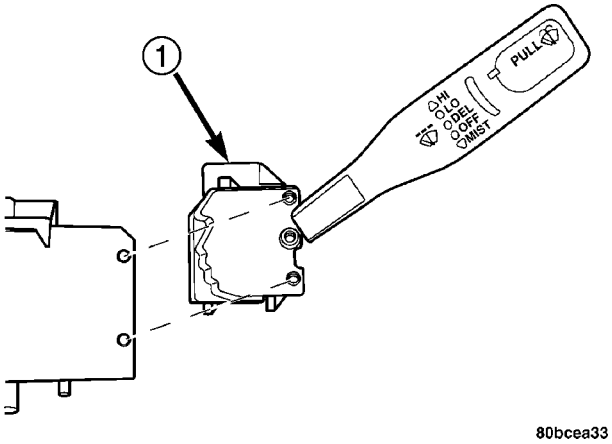

Fig. 17 FRONT WIPER SWITCH - REMOVE/INSTALL

1 - FRONT WIPER SWITCH

(3) Connect both posi-lock harness connectors at the rear of the multi-function switch and front wiper/ washer switch (Fig. 16).

(4) Install both upper and lower steering column shrouds (Refer to 19 - STEERING/COLUMN/UPPER SHROUD - INSTALLATION).

(5) Connect the battery negative cable (Fig. 12).

(6) Close hood.

(7) Verify vehicle and system operation.

REAR WASHER NOZZLE

REMOVAL

(1) Open liftgate.

(2) Remove liftgate CHMSL access panel (Refer to 23 - BODY/DECKLID/HATCH/LIFTGATE/TAIL-GATE/CHMSL COVER PANEL - REMOVAL).

(3) Disconnect the rear washer hose at nozzle.

(4) Remove the nut retaining the rear washer nozzle and remove the nozzle from rear window glass and vehicle.

INSTALLATION

(1) Install the nozzle into rear window opening and retaining nut to the rear washer nozzle and torque to 2.8 N·m (25 in. lbs.).

NOTE: Verify that the nozzle is pointing straight down.

(2) Connect the rear washer hose at nozzle.

(3) Install liftgate CHMSL access panel (Refer to 23 - BODY/DECKLID/HATCH/LIFTGATE/TAIL-GATE/CHMSL COVER PANEL - INSTALLATION).

(4) Close liftgate.

(5) Verify vehicle and system operation.

REAR WIPER ARMS

REMOVAL

(1) Remove the rear wiper arm nut cap.

(2) Remove wiper arm retaining nut.

(3) Use a battery terminal puller to remove the wiper arm from the wiper pivot (Fig. 18).

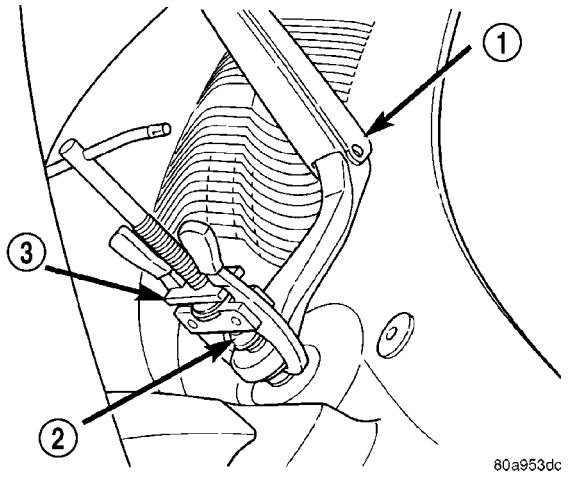

Fig. 18 WIPER ARM PULLER (SHOWN ON FRONT WIPER ARM)

1 - WIPER ARM
2 - WIPER PIVOT
3 - BATTERY TERMINAL PULLER

REAR WIPER ARMS (Continued)

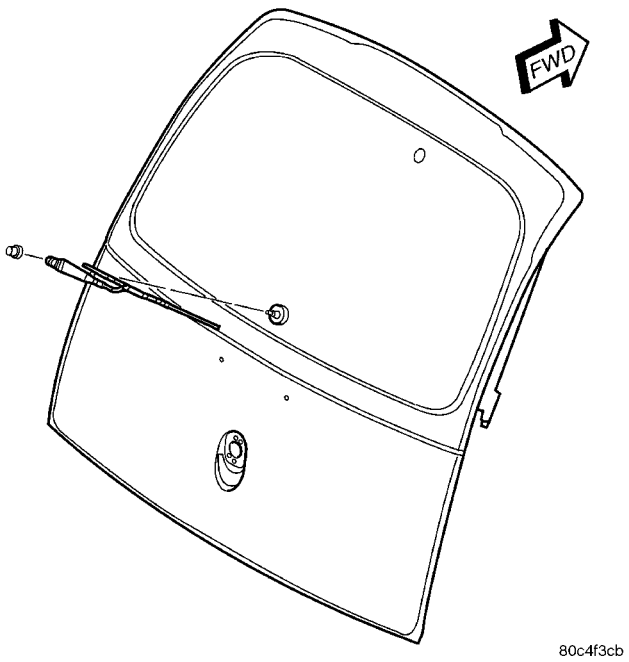

Fig. 19 REAR WIPER ARM - REMOVE/INSTALL

INSTALLATION

Before installation activate wiper system to ensure the wiper module is in the PARK position. Position wiper arm so that the tip of the blade is on the park line on the windshield.

NOTE: Blade should be parked along bottom rear window defogger grid line. Vertical tick mark shows park tolerance.

(1) Install the arm on the pivot (Fig. 19) and position to tick mark (Fig. 20).
(2) Install wiper arm retaining nut and torque to 18-20 N·m (160-175 in. lbs.).
(3) Install the rear wiper arm nut cap.
(4) Verify system operation.

REAR WIPER BLADE

REMOVAL

(1) Lift wiper arm from the glass.
(2) Remove blade assembly from arm by pushing release tab under arm tip and slide blade towards pivot (Fig. 21).
(3) Gently place wiper arm tip on glass surface.

INSTALLATION

(1) Install blade assembly on arm by sliding blade until it clicks into arm tip (Fig. 21).
(2) Let wiper arm/blade rest on glass.
(3) Verify system operation.

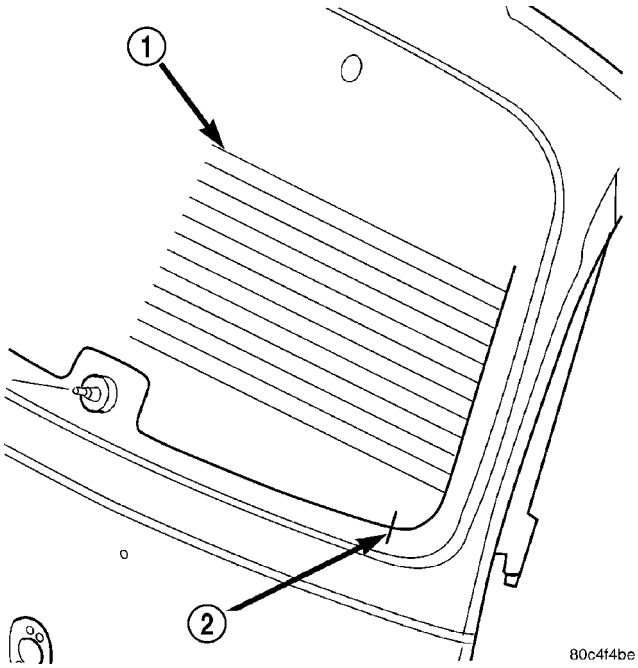

Fig. 20 REAR WIPER BLADE/ARM TICK MARK

1 - EBL GRID LINES
2 - TICK MARK

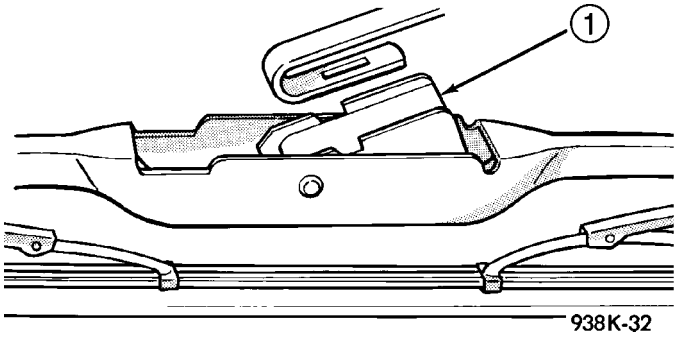

Fig. 21 REAR WIPER BLADE - REMOVE/INSTALL

1 - RELEASE TAB

REAR WIPER MOTOR

REMOVAL

(1) Open hood.
(2) Disconnect and isolate the battery negative cable (Fig. 12).
(3) Remove the rear wiper arm nut cap.
(4) Remove wiper arm retaining nut.
(5) Use a battery terminal puller to remove the wiper arm from the wiper pivot (Fig. 18).
(6) Remove liftgate trim panel (Refer to 23 - BODY/DECKLID/HATCH/LIFTGATE/TAILGATE/ TRIM PANEL - REMOVAL).
(7) Disconnect harness connector.
(8) Remove three bolts to the rear wiper motor and remove from vehicle (Fig. 22).

REAR WIPER MOTOR (Continued)

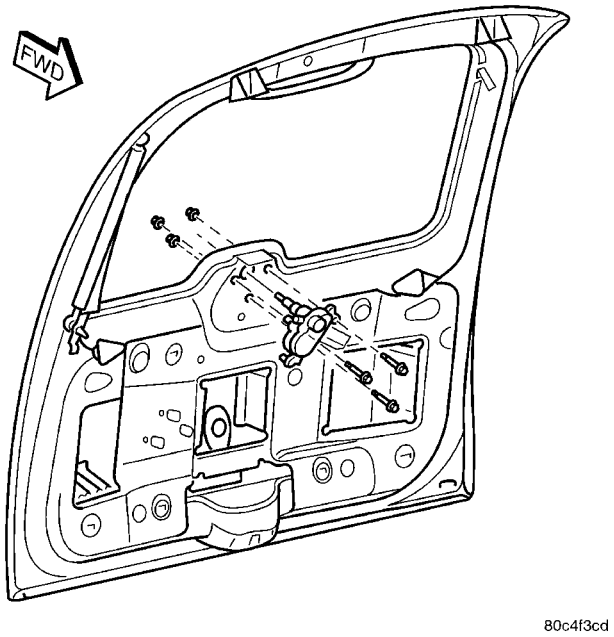

Fig. 22 REAR WIPER MOTOR - REMOVE/INSTALL

CAUTION: Use extreme care when taking out motor. Damage to the grommet and or window can occur.

INSTALLATION

Before installation activate wiper system to ensure the wiper module is in the PARK position. Position wiper arm so that the tip of the blade is on the park line on the glass.

NOTE: When servicing the rear wiper motor, replace all three rubber well-nuts.

(1) Install three bolts to the rear wiper motor (Fig. 22). Torque bolts to 1.2 N·m (10 in. lbs.).
(2) Connect harness connector.
(3) Install liftgate trim panel (Refer to 23 - BODY/DECKLID/HATCH/LIFTGATE/TAILGATE/TRIM PANEL - INSTALLATION).
(4) Install the arm on the pivot (Fig. 19).
(5) Install wiper arm retaining nut and torque to 18-20 N·m (160-175 in. lbs.).
(6) Install the rear wiper arm nut cap.
(7) Connect the battery negative cable (Fig. 12).
(8) Close hood.
(9) Verify vehicle and system operation.

REAR WIPER SWITCH

DIAGNOSIS AND TESTING - REAR WIPER SWITCH

The rear windshield wiper/washer switch may be tested in the vehicle or out of the vehicle, on the bench.

IN-VEHICLE TESTING

(1) Remove the switch from the instrument panel but leave the switch connected, refer to Instrument Panel Systems, Accessory Switch Bezel Removal and Installation.
(2) Turn the ignition switch ON.
(3) Using a voltmeter, check for battery voltage at Pin 1 and 2 (Fig. 23).

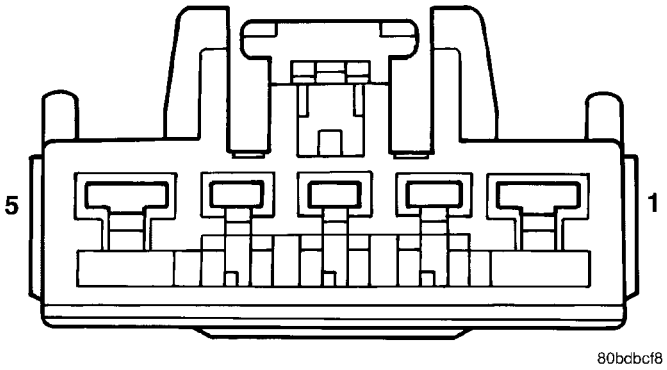

Fig. 23 REAR WIPER SWITCH HARNESS CONNECTOR

(a) If OK, go to Step 4.
(b) If NOT OK, check wiper fuse in the fuse block and the 40 Amp cartridge fuse in the Power Distribution Center (PDC). If fuses are OK, check wiring circuit. Refer to Wiring Diagrams.

(4) Check Pin 5, with switch in the ON position there should be battery voltage and no voltage in the OFF position.
(a) If NOT OK, no voltage in the ON position or voltage in the OFF position. Replace the switch.

BENCH TESTING

(1) First remove switch. Refer to Instrument Panel Systems, Accessory Switch Bezel Removal and Installation.
(2) With switch removed from vehicle, use a jumper wire and connect a 12 volt supply to Pin 1 and 2. Using a third jumper wire, ground Pin 3. Refer to (Fig. 24).
(3) Follow the same procedures used for IN-VEHICLE TESTING, except for step Step 2.

REAR WIPER SWITCH (Continued)

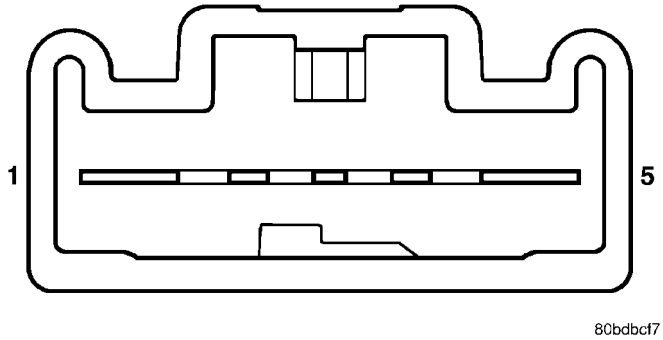

Fig. 24 REAR WIPER SWITCH CONNECTOR

REMOVAL

The Rear Wiper Switch is located within the accessory switch bezel in the lower center stack of the instrument panel. For Removal and Installation of the Rear Wiper Switch, (Refer to 23 - BODY/INSTRUMENT PANEL/ACCESSORY SWITCH BEZEL - REMOVAL) and (Refer to 23 - BODY/INSTRUMENT PANEL/ACCESSORY SWITCH BEZEL - INSTALLATION).

WASHER HOSES

REMOVAL

For damaged or plugged windshield washer hose, remove the affected piece of hose and replace with bulk hose. It may be necessary to de-trim parts of the interior to locate the problem portion of hose. Refer to (Fig. 25) hose routing. Refer also to Body, Interior component Removal and Installation.

INSTALLATION

Depending on how much of the vehicle has been de-trimmed, either splice in a small piece of hose or replace the entire length of affected hose. Verify vehicle and system operation upon reassembly.

WASHER PUMP MOTOR

REMOVAL

(1) Open hood.

(2) Disconnect and isolate the battery negative cable (Fig. 12).

(3) Using a trim stick (special tool #C-4755) or equivalent, gently pry up on the wiper arm nut cap and remove (Fig. 7).

(4) Remove wiper arm retaining nut (Fig. 7).

(5) Remove the arm from the pivot using a rocking motion while the arm is in an over/centered position (Fig. 7).

(6) Remove the right cowl cover.

(a) Remove the rear engine compartment seal at the cowl.

(b) Remove the four push retainers to the right side cowl cover and remove from vehicle.

(7) Remove three reservoir retaining screws.

(8) Disconnect the pump wire connector.

(9) Disconnect the washer hose connections.

(10) Lift washer reservoir out of cowl area and drain into bucket.

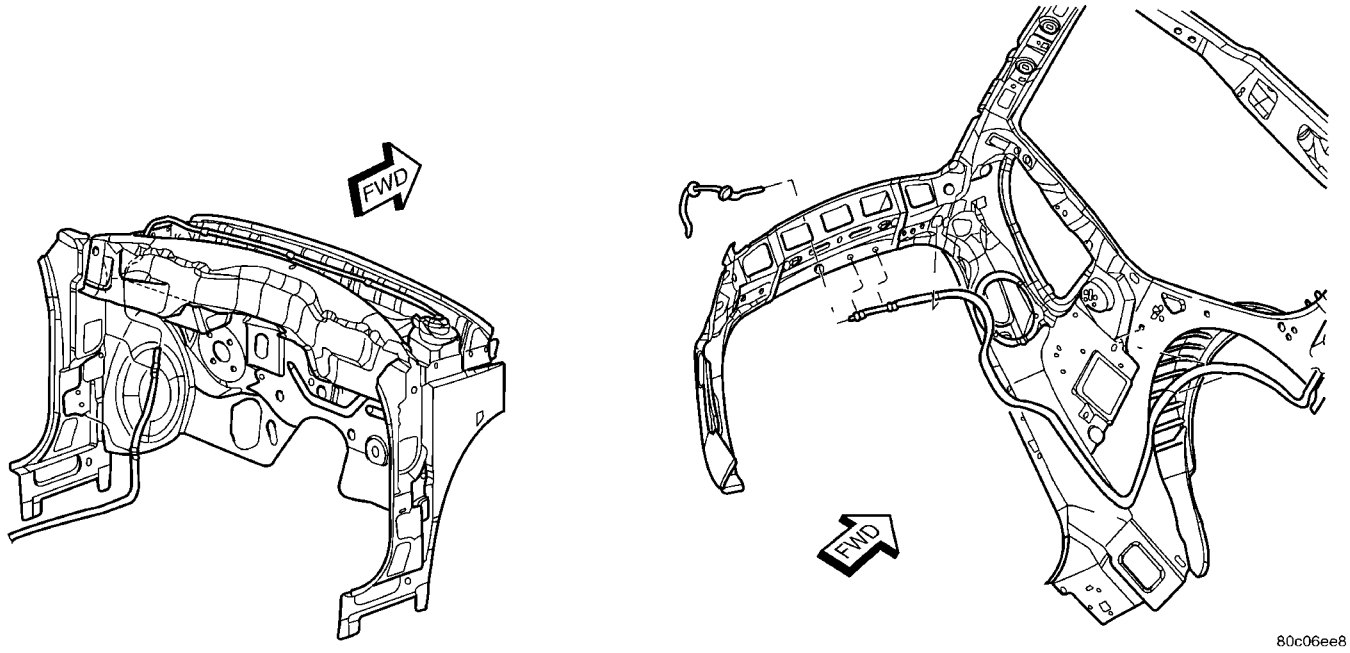

Fig. 25 BODY HOSE ROUTING

WASHER PUMP MOTOR (Continued)

(11) Remove plastic strap from around pump.
(12) Gently pry pump away from reservoir and out of grommet. Care must be taken not to puncture reservoir.
(13) Remover rubber grommet from reservoir.

INSTALLATION

CAUTION: A new grommet must be used every time the pump is removed/installed from the reservoir to prevent possible leaks in the future.

(1) Install new grommet into the reservoir.
(2) Insert pump into pump grommet.
(3) Place plastic strap over pump assembly and firmly snap into the reservoir.
(4) Place reservoir into cowl area and connect the washer hoses.

NOTE: The hose with the white stripe goes on the white side of the pump and the black hose on the black side of the pump.

(5) Connect the pump wire connector.
(6) Install the three reservoir retaining screws. Torque screws to 8 N·m (70 in. lbs.).
(7) Install the right cowl cover.
(a) Place the right side cowl cover into position and install the four push retainers.
(b) Install the rear engine compartment seal at the cowl.
Before installation of the front wiper arms, activate the wiper system to ensure the front wiper module is in the PARK position. Position wiper arms so that the tip of the driver's blade and the middle of the passenger's blade is on the park line on the windshield (Refer to 8 - ELECTRICAL/WIPERS/WASHERS/WIPER ARMS - ADJUSTMENTS).
(8) Place the arm on the pivot while the arm is in an over/centered position (Fig. 7).
(9) Install the wiper arm retaining nut (Fig. 7) and torque to 21 N·m (190 in. lbs.).
(10) Install the wiper arm nut cap (Fig. 7).
(11) Connect the battery negative cable (Fig. 12).
(12) Close hood.
(13) Verify vehicle and system operation.

WASHER PUMP MOTOR - RHD

REMOVAL

(1) Open hood.
(2) Disconnect and isolate the battery negative cable (Fig. 12).
(3) Using a trim stick (special tool #C-4755) or equivalent, gently pry up on the wiper arm nut cap and remove (Fig. 7).
(4) Remove wiper arm retaining nut (Fig. 7).
(5) Remove the arm from the pivot using a rocking motion while the arm is in an over/centered position (Fig. 7).
(6) Remove the left cowl cover.
(a) Remove the rear engine compartment seal at the cowl.
(b) Remove the four push retainers to the left side cowl cover and remove from vehicle.
(7) Remove three reservoir retaining screws.
(8) Disconnect the pump wire connector.
(9) Disconnect the washer hose connections.
(10) Lift washer reservoir out of cowl area and drain into bucket.
(11) Remove the plastic strap from around pump.
(12) Gently pry pump away from reservoir and out of grommet. Care must be taken not to puncture reservoir.
(13) Remover rubber grommet from reservoir.

INSTALLATION

CAUTION: A new grommet must be used every time the pump is removed/installed from the reservoir to prevent possible leaks in the future.

(1) Install new grommet into the reservoir.
(2) Insert pump into pump grommet and firmly snap into reservoir.
(3) Place plastic strap over pump assembly and snap firmly into the reservoir.
(4) Place reservoir into cowl area and connect the washer hoses.

NOTE: The hose with the white stripe goes on the white side of the pump and the black hose on the black side of the pump.

(5) Connect the pump wire connector.
(6) Install the three reservoir retaining screws. Torque screws to 8 N·m (70 in. lbs.).
(7) Install the cowl cover. The left side cover overlaps the right side cover.
(a) Place the left side cowl cover into position and install the four push retainers.
(b) Install the rear engine compartment seal at the cowl.
Before installation of the front wiper arms, activate the wiper system to ensure the front wiper module is in the PARK position. Position wiper arms so that the tip of the driver's blade and the middle of the passenger's blade is on the park line on the windshield (Refer to 8 - ELECTRICAL/WIPERS/WASHERS/WIPER ARMS - ADJUSTMENTS).
(8) Place the arm on the pivot while the arm is in an over/centered position (Fig. 7).

WASHER PUMP MOTOR - RHD (Continued)

(9) Install the wiper arm retaining nut (Fig. 7) and torque to 21 N·m (190 in. lbs.).
(10) Install the wiper arm nut cap (Fig. 7).
(11) Connect the battery negative cable (Fig. 12).
(12) Close hood.
(13) Verify vehicle and system operation.

WASHER RESERVOIR

REMOVAL

(1) Open hood.
(2) Disconnect and isolate the battery negative cable (Fig. 12).
(3) Using a trim stick (special tool #C-4755) or equivalent, gently pry up on the wiper arm nut cap and remove (Fig. 7).
(4) Remove wiper arm retaining nut (Fig. 7).
(5) Remove the arm from the pivot using a rocking motion while the arm is in an over/centered position (Fig. 7).
(6) Remove the right cowl cover. The right side cover overlaps the left side cover.
(a) Remove the rear engine compartment seal at the cowl.
(b) Remove the four push retainers to the right side cowl cover and remove from vehicle.
(7) Remove three reservoir retaining screws.
(8) Disconnect the pump wire connector.
(9) Disconnect the washer hose connections.
(10) Lift washer reservoir out of cowl area and drain into bucket.

NOTE: If replacing the washer reservoir, the washer pump must be transferred to the new reservoir. The new reservoir will come with a new washer pump grommet.

(11) Remove plastic strap from around pump.
(12) Gently pry pump away from reservoir and out of grommet.

INSTALLATION

(1) Insert pump into pump grommet.
(2) Place plastic strap over pump assembly and snap firmly into the reservoir.
(3) Place reservoir into cowl area and connect the washer hoses.

NOTE: The hose with the white stripe goes on the white side of the pump and the black hose on the black side of the pump.

(4) Connect the pump wire connector.
(5) Install the three reservoir retaining screws. Torque screws to 8 N·m (70 in. lbs.).
(6) Install the cowl cover. The right side cover overlaps the left side cover.
(a) Place the right side cowl cover into position and install the four push retainers.
(b) Install the rear engine compartment seal at the cowl.
Before installation of the front wiper arms, activate the wiper system to ensure the front wiper module is in the PARK position. Position wiper arms so that the tip of the driver's blade and the middle of the passenger's blade is on the park line on the windshield (Refer to 8 - ELECTRICAL/WIPERS/WASHERS/WIPER ARMS - ADJUSTMENTS).
(7) Place the arm on the pivot while the arm is in an over/centered position (Fig. 7).
(8) Install the wiper arm retaining nut (Fig. 7) and torque to 21 N·m (190 in. lbs.).
(9) Install the wiper arm nut cap (Fig. 7).
(10) Connect the battery negative cable (Fig. 12).
(11) Close hood.
(12) Verify vehicle and system operation.

WIRING

TABLE OF CONTENTS

	page
WIRING DIAGRAM INFORMATION	8W-01-1
COMPONENT INDEX	8W-02-1
POWER DISTRIBUTION	8W-10-1
FUSE BLOCK	8W-11-1
GROUND DISTRIBUTION	8W-15-1
BUS COMMUNICATIONS	8W-18-1
CHARGING SYSTEM	8W-20-1
STARTING SYSTEM	8W-21-1
FUEL/IGNITION SYSTEM	8W-30-1
TRANSMISSION CONTROL SYSTEM	8W-31-1
VEHICLE SPEED CONTROL	8W-33-1
ANTILOCK BRAKES	8W-35-1
VEHICLE THEFT SECURITY SYSTEM	8W-39-1
INSTRUMENT CLUSTER	8W-40-1
HORN/CIGAR LIGHTER/POWER OUTLET	8W-41-1
AIR CONDITIONING-HEATER	8W-42-1
OCCUPANT RESTRAINT SYSTEM	8W-43-1
INTERIOR LIGHTING	8W-44-1
AUDIO SYSTEM	8W-47-1
REAR WINDOW DEFOGGER	8W-48-1
OVERHEAD CONSOLE	8W-49-1
FRONT LIGHTING	8W-50-1
REAR LIGHTING	8W-51-1
TURN SIGNALS	8W-52-1
WIPERS	8W-53-1
POWER WINDOWS	8W-60-1
POWER DOOR LOCKS	8W-61-1
POWER MIRRORS	8W-62-1
POWER SEAT	8W-63-1
POWER SUNROOF	8W-64-1
SPLICE INFORMATION	8W-70-1
CONNECTOR PIN-OUTS	8W-80-1
CONNECTOR/GROUND/SPLICE LOCATION	8W-91-1
POWER DISTRIBUTION	8W-97-1

8W-01 WIRING DIAGRAM INFORMATION

TABLE OF CONTENTS

page

WIRING DIAGRAM INFORMATION
DESCRIPTION
DESCRIPTION - HOW TO USE WIRING DIAGRAMS 1
DESCRIPTION - CIRCUIT INFORMATION 5
DESCRIPTION - CIRCUIT FUNCTIONS 6
DESCRIPTION - SECTION IDENTIFICATION AND INFORMATION 6
DESCRIPTION - CONNECTOR, GROUND AND SPLICE INFORMATION 7
WARNING
WARNINGS - GENERAL 7
DIAGNOSIS AND TESTING - WIRING HARNESS 7
STANDARD PROCEDURE
STANDARD PROCEDURE - ELECTROSTATIC DISCHARGE (ESD) SENSITIVE DEVICES 8
STANDARD PROCEDURE - TESTING OF VOLTAGE POTENTIAL. 9
STANDARD PROCEDURE - TESTING FOR CONTINUITY 9
STANDARD PROCEDURE - TESTING FOR A SHORT TO GROUND 9
STANDARD PROCEDURE - TESTING FOR A SHORT TO GROUND ON FUSES POWERING SEVERAL LOADS 9
STANDARD PROCEDURE - TESTING FOR A VOLTAGE DROP 10
SPECIAL TOOLS
WIRING/TERMINAL 10
CONNECTOR
REMOVAL 11
INSTALLATION 11
DIODE
REMOVAL 14
INSTALLATION 14
TERMINAL
REMOVAL 14
INSTALLATION 14
WIRE
STANDARD PROCEDURE - WIRE SPLICING . . 15

WIRING DIAGRAM INFORMATION

DESCRIPTION

DESCRIPTION - HOW TO USE WIRING DIAGRAMS

DaimlerChrysler Corporation wiring diagrams are designed to provide information regarding the vehicles wiring content. In order to effectively use the wiring diagrams to diagnose and repair DaimlerChrysler Corporation vehicles, it is important to understand all of their features and characteristics.

Diagrams are arranged such that the power (B+) side of the circuit is placed near the top of the page, and the ground (B-) side of the circuit is placed near the bottom of the page (Fig. 1).

All switches, components, and modules are shown in the at rest position with the doors closed and the key removed from the ignition (Fig. 2).

Components are shown two ways. A solid line around a component indicates that the component is complete. A dashed line around the component indicates that the component is being shown is not complete. Incomplete components have a reference number to indicate the page where the component is shown complete.

It is important to realize that no attempt is made on the diagrams to represent components and wiring as they appear on the vehicle. For example, a short piece of wire is treated the same as a long one. In addition, switches and other components are shown as simply as possible, with regard to function only.

SYMBOLS

International symbols are used throughout the wiring diagrams. These symbols are consistent with those being used around the world (Fig. 3).

WIRING DIAGRAM INFORMATION (Continued)

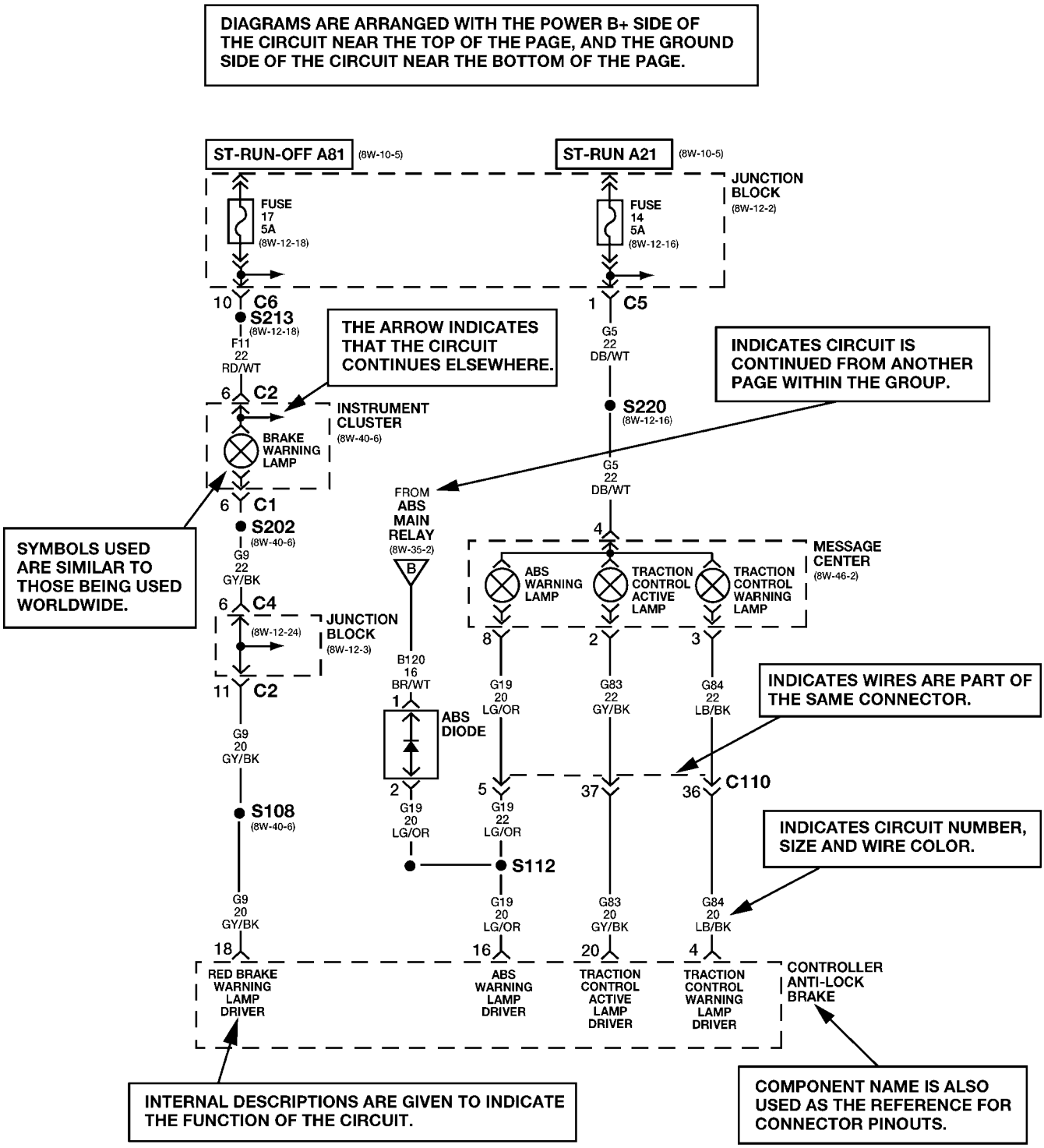

The System shown here is an EXAMPLE ONLY. It does not represent the actual circuit shown in the WIRING DIAGRAM SECTION.

80c06d01

Fig. 1 WIRING DIAGRAM EXAMPLE 1

WIRING DIAGRAM INFORMATION (Continued)

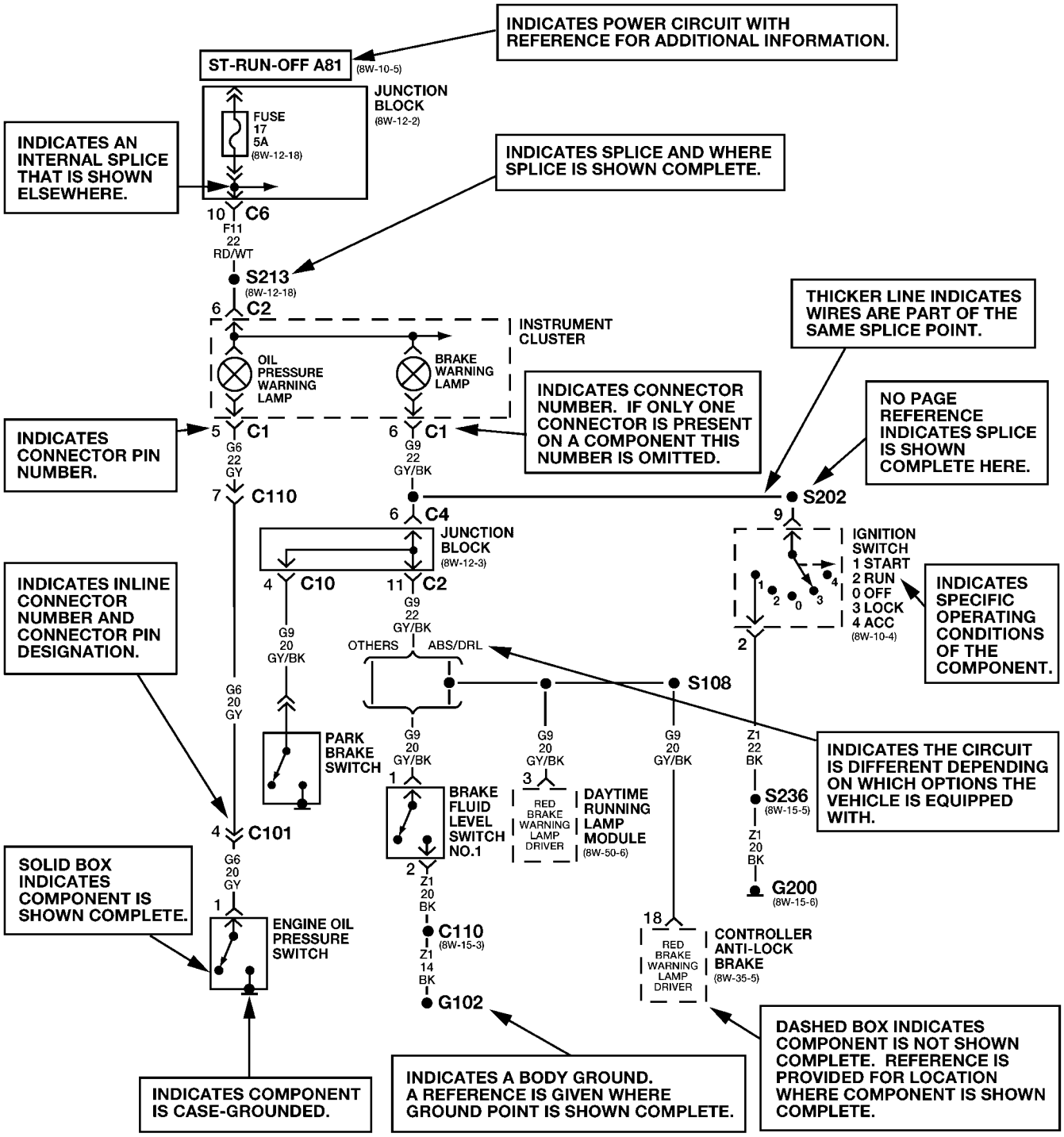

The System shown here is an EXAMPLE ONLY. It does not represent the actual circuit shown in the WIRING DIAGRAM SECTION.

80c06d02

Fig. 2 WIRING DIAGRAM EXAMPLE 2

WIRING DIAGRAM INFORMATION (Continued)

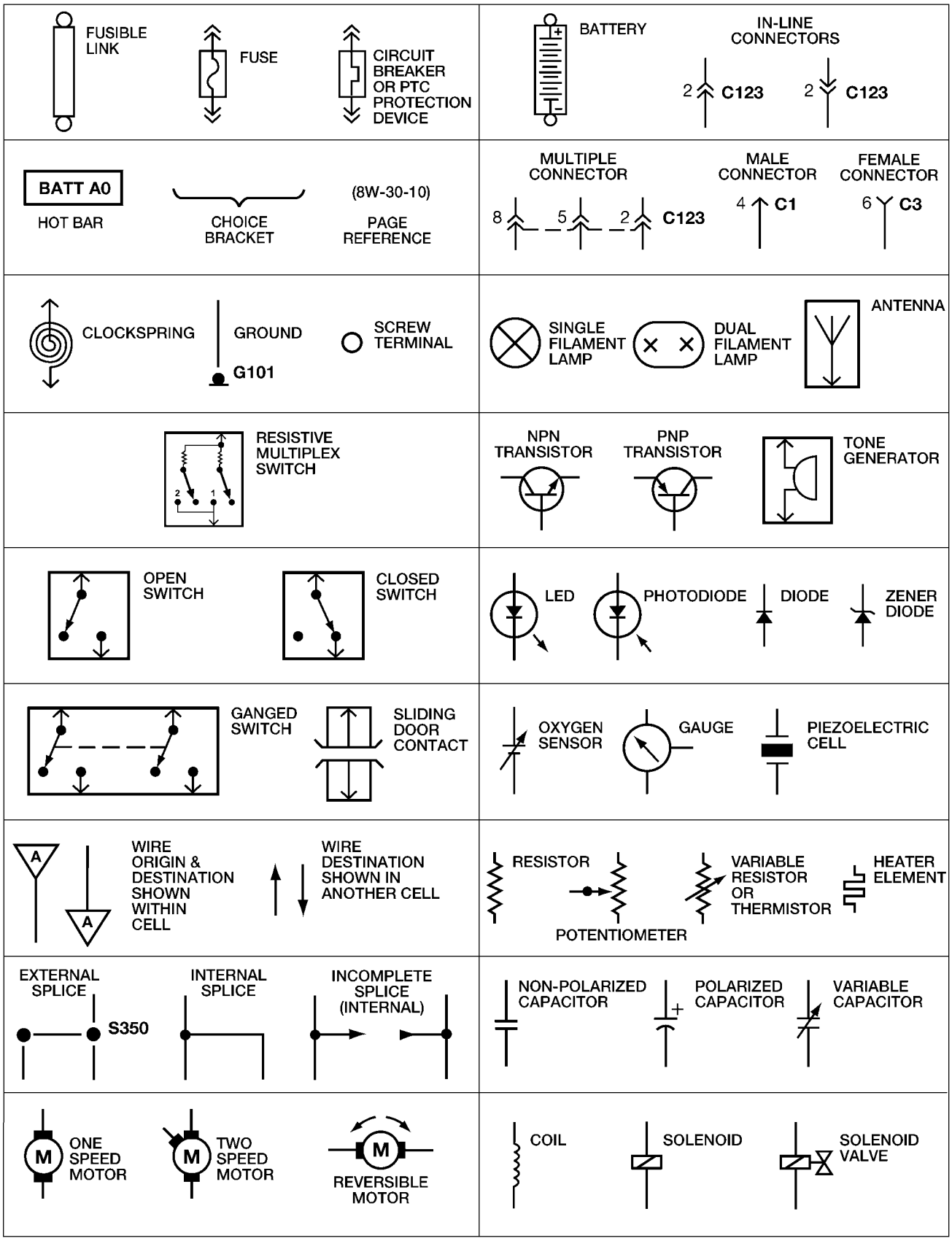

Fig. 3 WIRING DIAGRAM SYMBOLS

WIRING DIAGRAM INFORMATION (Continued)

TERMINOLOGY

This is a list of terms and definitions used in the wiring diagrams.

LHD . . . . . Left Hand Drive Vehicles
RHD . . . . . Right Hand Drive Vehicles
ATX . . . . . Automatic Transmissions-Front Wheel Drive
MTX . . . . . Manual Transmissions-Front Wheel Drive
AT . . . . . Automatic Transmissions-Rear Wheel Drive
MT . . . . . Manual Transmissions-Rear Wheel Drive
SOHC . . . . . Single Over Head Cam Engine
DOHC . . . . . Double Over Head Cam Engine
Built-Up-Export . . . . . Vehicles Built For Sale In Markets Other Than North America
Except Built-Up-Export . . . . . Vehicles Built For Sale In North America

DESCRIPTION - CIRCUIT INFORMATION

Each wire shown in the diagrams contains a code which identifies the main circuit, part of the main circuit, gage of wire, and color (Fig. 4).

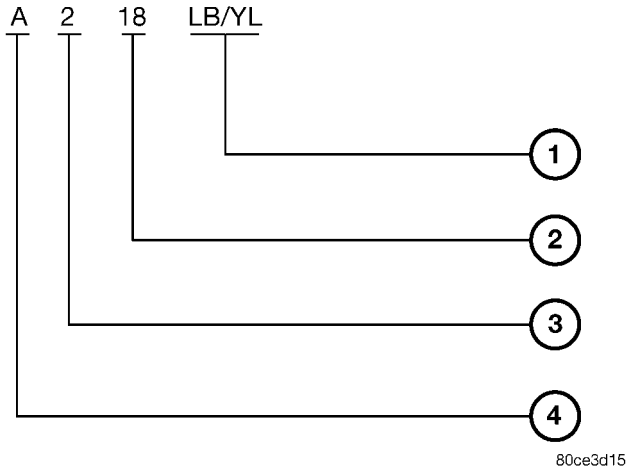

Fig. 4 WIRE CODE IDENTIFICATION

1 - COLOR OF WIRE (LIGHT BLUE WITH YELLOW TRACER
2 - GAGE OF WIRE (18 GAGE)
3 - PART OF MAIN CIRCUIT (VARIES DEPENDING ON EQUIPMENT)
4 - MAIN CIRCUIT IDENTIFICATION

WIRE COLOR CODE CHART

COLOR CODE	COLOR
BL	BLUE
BK	BLACK
BR	BROWN
DB	DARK BLUE
DG	DARK GREEN
GY	GRAY
LB	LIGHT BLUE
LG	LIGHT GREEN
OR	ORANGE
PK	PINK
RD	RED
TN	TAN
VT	VIOLET
WT	WHITE
YL	YELLOW
*	WITH TRACER

WIRING DIAGRAM INFORMATION (Continued)

DESCRIPTION - CIRCUIT FUNCTIONS

All circuits in the diagrams use an alpha/numeric code to identify the wire and it's function. To identify which circuit code applies to a system, refer to the Circuit Identification Code Chart. This chart shows the main circuits only and does not show the secondary codes that may apply to some models.

CIRCUIT IDENTIFICATION CODE CHART

CIRCUIT	FUNCTION
A	BATTERY FEED
B	BRAKE CONTROLS
C	CLIMATE CONTROLS
D	DIAGNOSTIC CIRCUITS
E	DIMMING ILLUMINATION CIRCUITS
F	FUSED CIRCUITS
G	MONITORING CIRCUITS (GAUGES)
H	OPEN
I	NOT USED
J	OPEN
K	POWERTRAIN CONTROL MODULE
L	EXTERIOR LIGHTING
M	INTERIOR LIGHTING
N	NOT USED
O	NOT USED
P	POWER OPTION (BATTERY FEED)
Q	POWER OPTIONS (IGNITION FEED)
R	PASSIVE RESTRAINT
S	SUSPENSION/STEERING
T	TRANSMISSION/TRANSAXLE/ TRANSFER CASE
U	OPEN
V	SPEED CONTROL, WIPER/ WASHER
W	OPEN
X	AUDIO SYSTEMS
Y	OPEN
Z	GROUNDS

DESCRIPTION - SECTION IDENTIFICATION AND INFORMATION

The wiring diagrams are grouped into individual sections. If a component is most likely found in a particular group, it will be shown complete (all wires, connectors, and pins) within that group. For example, the Auto Shutdown Relay is most likely to be found in Group 30, so it is shown there complete. It can, however, be shown partially in another group if it contains some associated wiring.

Splice diagrams in Section 8W-70 show the entire splice and provide references to other sections the splices serves. Section 8W-70 only contains splice diagrams that are not shown in their entirety somewhere else in the wiring diagrams.

Section 8W-80 shows each connector and the circuits involved with that connector. The connectors are identified using the name/number on the diagram pages.

WIRING SECTION CHART

GROUP	TOPIC
8W-01 thru 8W-09	General information and Diagram Overview
8W-10 thru 8W-19	Main Sources of Power and Vehicle Grounding
8W-20 thru 8W-29	Starting and Charging
8W-30 thru 8W-39	Powertrain/Drivetrain Systems
8W-40 thru 8W-49	Body Electrical items and A/C
8W-50 thru 8W-59	Exterior Lighting, Wipers and Trailer Tow
8W-60 thru 8W-69	Power Accessories
8W-70	Splice Information
8W-80	Connector Pin Outs
8W-91	Connector, Ground and Splice Locations

WIRING DIAGRAM INFORMATION (Continued)

DESCRIPTION - CONNECTOR, GROUND AND SPLICE INFORMATION

CAUTION: Not all connectors are serviced. Some connectors are serviced only with a harness. A typical example might be the Supplemental Restraint System connectors. Always check parts availability before attempting a repair.

IDENTIFICATION

In-line connectors are identified by a number, as follows:

- In-line connectors located in the engine compartment are C100 series numbers
- In-line connectors located in the Instrument Panel area are C200 series numbers.
- In-line connectors located in the body are C300 series numbers.
- Jumper harness connectors are C400 series numbers.
- Grounds and ground connectors are identified with a “G” and follow the same series numbering as the in-line connectors.
- Splices are identified with an “S” and follow the same series numbering as the in-line connectors.
- Component connectors are identified by the component name instead of a number. Multiple connectors on a component use a C1, C2, etc. identifier.

LOCATIONS

Section 8W-91 contains connector/ground/splice location illustrations. The illustrations contain the connector name (or number)/ground number/splice number and component identification. Connector/ground/splice location charts in section 8W-91 reference the figure numbers of the illustrations.

The abbreviation T/O is used in the component location section to indicate a point in which the wiring harness branches out to a component. The abbreviation N/S means Not Shown in the illustrations

WARNING

WARNINGS - GENERAL

WARNINGS provide information to prevent personal injury and vehicle damage. Below is a list of general warnings that should be followed any time a vehicle is being serviced.

WARNING: ALWAYS WEAR SAFETY GLASSES FOR EYE PROTECTION.

WARNING: USE SAFETY STANDS ANYTIME A PROCEDURE REQUIRES BEING UNDER A VEHICLE.

WARNING: BE SURE THAT THE IGNITION SWITCH ALWAYS IS IN THE OFF POSITION, UNLESS THE PROCEDURE REQUIRES IT TO BE ON.

WARNING: SET THE PARKING BRAKE WHEN WORKING ON ANY VEHICLE. AN AUTOMATIC TRANSMISSION SHOULD BE IN PARK. A MANUAL TRANSMISSION SHOULD BE IN NEUTRAL.

WARNING: OPERATE THE ENGINE ONLY IN A WELL-VENTILATED AREA.

WARNING: KEEP AWAY FROM MOVING PARTS WHEN THE ENGINE IS RUNNING, ESPECIALLY THE FAN AND BELTS.

WARNING: TO PREVENT SERIOUS BURNS, AVOID CONTACT WITH HOT PARTS SUCH AS THE RADIATOR, EXHAUST MANIFOLD(S), TAIL PIPE, CATALYTIC CONVERTER AND MUFFLER.

WARNING: DO NOT ALLOW FLAME OR SPARKS NEAR THE BATTERY. GASES ARE ALWAYS PRESENT IN AND AROUND THE BATTERY.

WARNING: ALWAYS REMOVE RINGS, WATCHES, LOOSE HANGING JEWELRY AND AVOID LOOSE CLOTHING.

DIAGNOSIS AND TESTING - WIRING HARNESS

TROUBLESHOOTING TOOLS

When diagnosing a problem in an electrical circuit there are several common tools necessary. These tools are listed and explained below.

- Jumper Wire - This is a test wire used to connect two points of a circuit. It can be used to bypass an open in a circuit.

WARNING: NEVER USE A JUMPER WIRE ACROSS A LOAD, SUCH AS A MOTOR, CONNECTED BETWEEN A BATTERY FEED AND GROUND.

- Voltmeter - Used to check for voltage on a circuit. Always connect the black lead to a known good ground and the red lead to the positive side of the circuit.

CAUTION: Most of the electrical components used in today’s vehicles are Solid State. When checking voltages in these circuits, use a meter with a 10 - megohm or greater impedance rating.

WIRING DIAGRAM INFORMATION (Continued)

• Ohmmeter - Used to check the resistance between two points of a circuit. Low or no resistance in a circuit means good continuity.

CAUTION: Most of the electrical components used in today's vehicles are Solid State. When checking resistance in these circuits use a meter with a 10 - megohm or greater impedance rating. In addition, make sure the power is disconnected from the circuit. Circuits that are powered up by the vehicle's electrical system can cause damage to the equipment and provide false readings.

• Probing Tools - These tools are used for probing terminals in connectors (Fig. 5). Select the proper size tool from Special Tool Package 6807, and insert it into the terminal being tested. Use the other end of the tool to insert the meter probe.

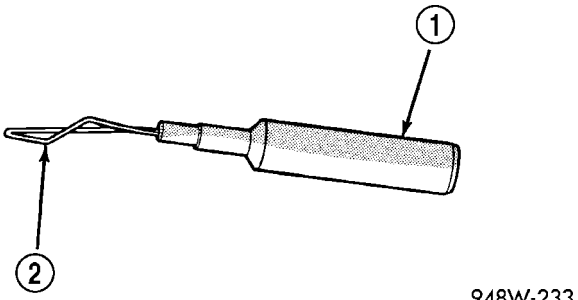

Fig. 5 PROBING TOOL

1 - SPECIAL TOOL 6801
2 - PROBING END

INTERMITTENT AND POOR CONNECTIONS

Most intermittent electrical problems are caused by faulty electrical connections or wiring. It is also possible for a sticking component or relay to cause a problem. Before condemning a component or wiring assembly, check the following items.

• Connectors are fully seated
• Spread terminals, or terminal push out
• Terminals in the wiring assembly are fully seated into the connector/component and locked into position
• Dirt or corrosion on the terminals. Any amount of corrosion or dirt could cause an intermittent problem
• Damaged connector/component casing exposing the item to dirt or moisture
• Wire insulation that has rubbed through causing a short to ground
• Some or all of the wiring strands broken inside of the insulation
• Wiring broken inside of the insulation

TROUBLESHOOTING WIRING PROBLEMS

When troubleshooting wiring problems there are six steps which can aid in the procedure. The steps are listed and explained below. Always check for non-factory items added to the vehicle before doing any diagnosis. If the vehicle is equipped with these items, disconnect them to verify these add-on items are not the cause of the problem.

(1) Verify the problem.
(2) Verify any related symptoms. Do this by performing operational checks on components that are in the same circuit. Refer to the wiring diagrams.
(3) Analyze the symptoms. Use the wiring diagrams to determine what the circuit is doing, where the problem most likely is occurring and where the diagnosis will continue.
(4) Isolate the problem area.
(5) Repair the problem area.
(6) Verify the proper operation. For this step, check for proper operation of all items on the repaired circuit. Refer to the wiring diagrams.

STANDARD PROCEDURE

STANDARD PROCEDURE - ELECTROSTATIC DISCHARGE (ESD) SENSITIVE DEVICES

All ESD sensitive components are solid state and a symbol (Fig. 6) is used to indicate this. When handling any component with this symbol, comply with the following procedures to reduce the possibility of electrostatic charge build up on the body and inadvertent discharge into the component. If it is not known whether the part is ESD sensitive, assume that it is.

(1) Always touch a known good ground before handling the part. This should be repeated while handling the part and more frequently after sliding across a seat, sitting down from a standing position, or walking a distance.
(2) Avoid touching electrical terminals of the part, unless instructed to do so by a written procedure.
(3) When using a voltmeter, be sure to connect the ground lead first.
(4) Do not remove the part form it's protective packing until it is time to install the part.
(5) Before removing the part from it's pakage, ground the pakage to a known good ground on the vehicle.

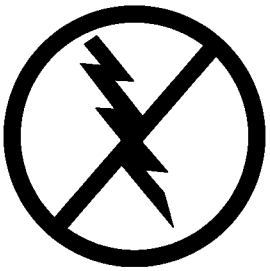

Fig. 6 ELECTROSTATIC DISCHARGE SYMBOL

WIRING DIAGRAM INFORMATION (Continued)

STANDARD PROCEDURE - TESTING OF VOLTAGE POTENTIAL

(1) Connect the ground lead of a voltmeter to a known good ground (Fig. 7).

(2) Connect the other lead of the voltmeter to the selected test point. The vehicle ignition may need to be turned ON to check voltage. Refer to the appropriate test procedure.

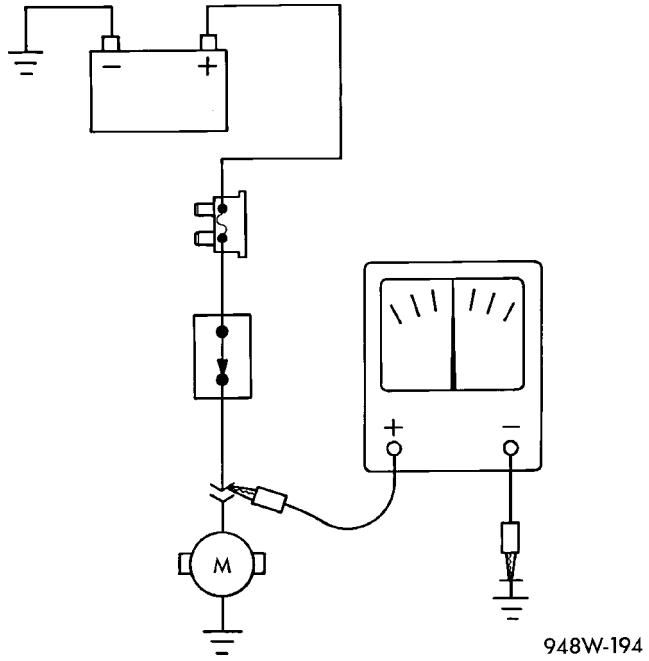

Fig. 7 TESTING FOR VOLTAGE POTENTIAL

STANDARD PROCEDURE - TESTING FOR CONTINUITY

(1) Remove the fuse for the circuit being checked or, disconnect the battery.

(2) Connect one lead of the ohmmeter to one side of the circuit being tested (Fig. 8).

(3) Connect the other lead to the other end of the circuit being tested. Low or no resistance means good continuity.

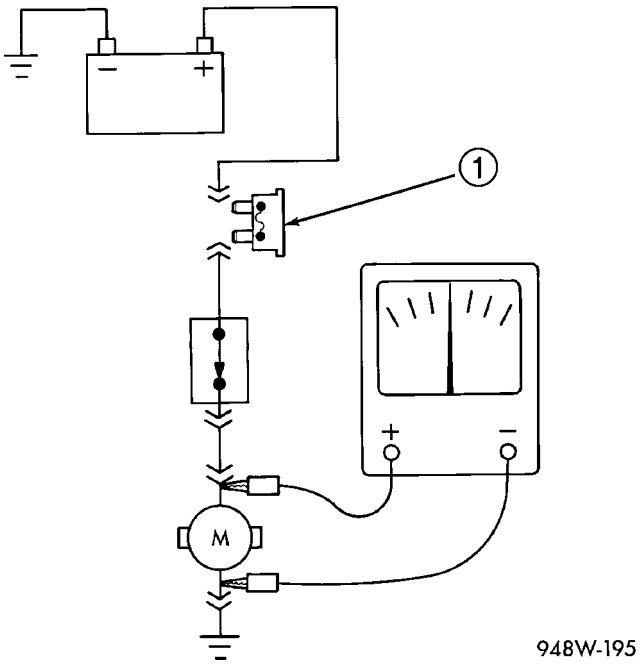

Fig. 8 TESTING FOR CONTINUITY

1 - FUSE REMOVED FROM CIRCUIT

STANDARD PROCEDURE - TESTING FOR A SHORT TO GROUND

(1) Remove the fuse and disconnect all items involved with the fuse.

(2) Connect a test light or a voltmeter across the terminals of the fuse.

(3) Starting at the fuse block, wiggle the wiring harness about six to eight inches apart and watch the voltmeter/test lamp.

(4) If the voltmeter registers voltage or the test lamp glows, there is a short to ground in that general area of the wiring harness.

STANDARD PROCEDURE - TESTING FOR A SHORT TO GROUND ON FUSES POWERING SEVERAL LOADS

(1) Refer to the wiring diagrams and disconnect or isolate all items on the suspected fused circuits.

(2) Replace the blown fuse.

(3) Supply power to the fuse by turning ON the ignition switch or re-connecting the battery.

(4) Start connecting or energizing the items in the fuse circuit one at a time. When the fuse blows the circuit with the short to ground has been isolated.

WIRING DIAGRAM INFORMATION (Continued)

STANDARD PROCEDURE - TESTING FOR A VOLTAGE DROP

(1) Connect the positive lead of the voltmeter to the side of the circuit closest to the battery (Fig. 9).

(2) Connect the other lead of the voltmeter to the other side of the switch, component or circuit.

(3) Operate the item.

(4) The voltmeter will show the difference in voltage between the two points.

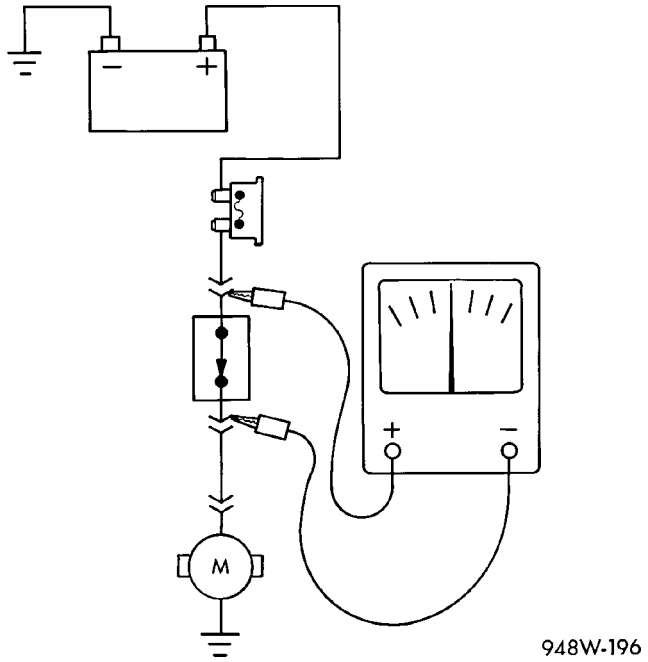

Fig. 9 TESTING FOR VOLTAGE DROP

SPECIAL TOOLS

WIRING/TERMINAL

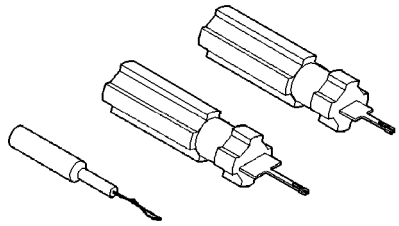

PROBING TOOL PACKAGE 6807

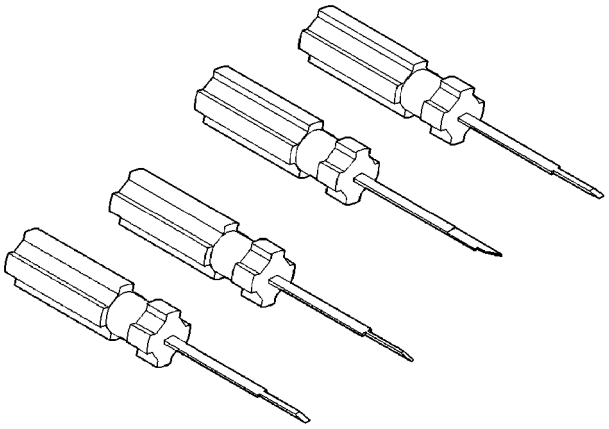

TERMINAL PICK TOOL SET 6680

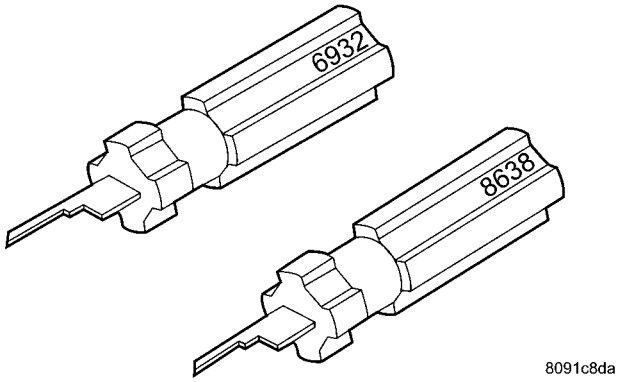

TERMINAL REMOVING TOOLS 6932 AND 8638

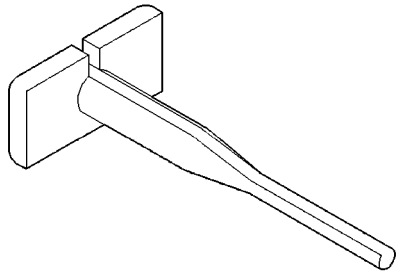

TERMINAL REMOVING TOOL 6934

CONNECTOR

REMOVAL

(1) Disconnect battery.

(2) Release Connector Lock (Fig. 10).

(3) Disconnect the connector being repaired from its mating half/component.

(4) Remove the dress cover (if applicable) (Fig. 10).

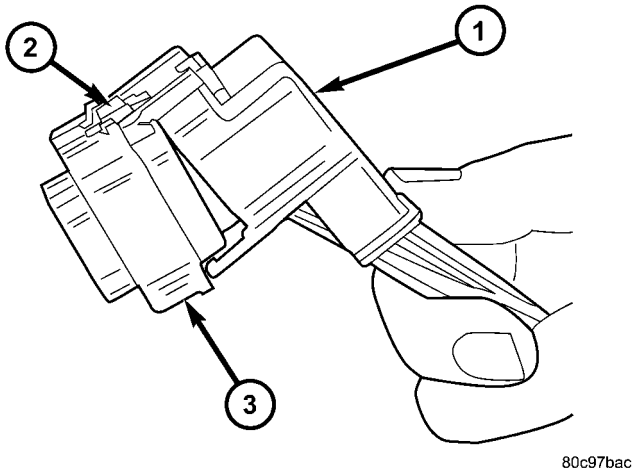

Fig. 10 REMOVAL OF DRESS COVER

1 - DRESS COVER
2 - CONNECTOR LOCK
3 - CONNECTOR

(5) Release the Secondary Terminal Lock, if required (Fig. 11).

(6) Position the connector locking finger away from the terminal using the proper special tool. Pull on the wire to remove the terminal from the connector (Fig. 12).

INSTALLATION

(1) Insert the removed terminal in the same cavity on the repair connector.

(2) Repeat steps for each terminal in the connector, being sure that all wires are inserted into the proper cavities. For additional connector pin-out identification, refer to the wiring diagrams.

(3) When the connector is re-assembled, the secondary terminal lock must be placed in the locked position to prevent terminal push out.

(4) Replace dress cover (if applicable).

(5) Connect connector to its mating half/component.

(6) Connect battery and test all affected systems.

CONNECTOR (Continued)

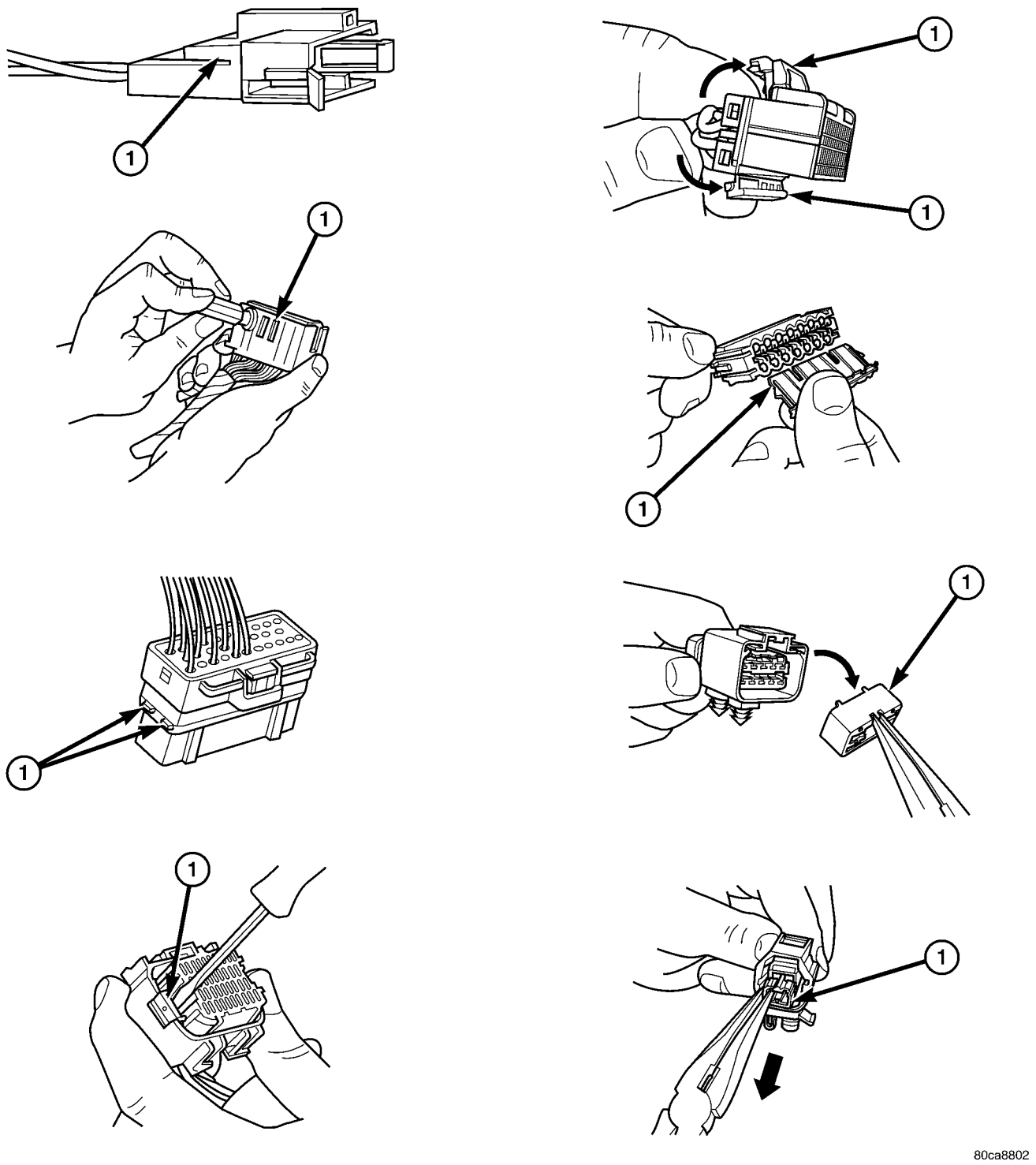

Fig. 11 EXAMPLES OF CONNECTOR SECONDARY TERMINAL LOCKS

1 - Secondary Terminal Lock

CONNECTOR (Continued)

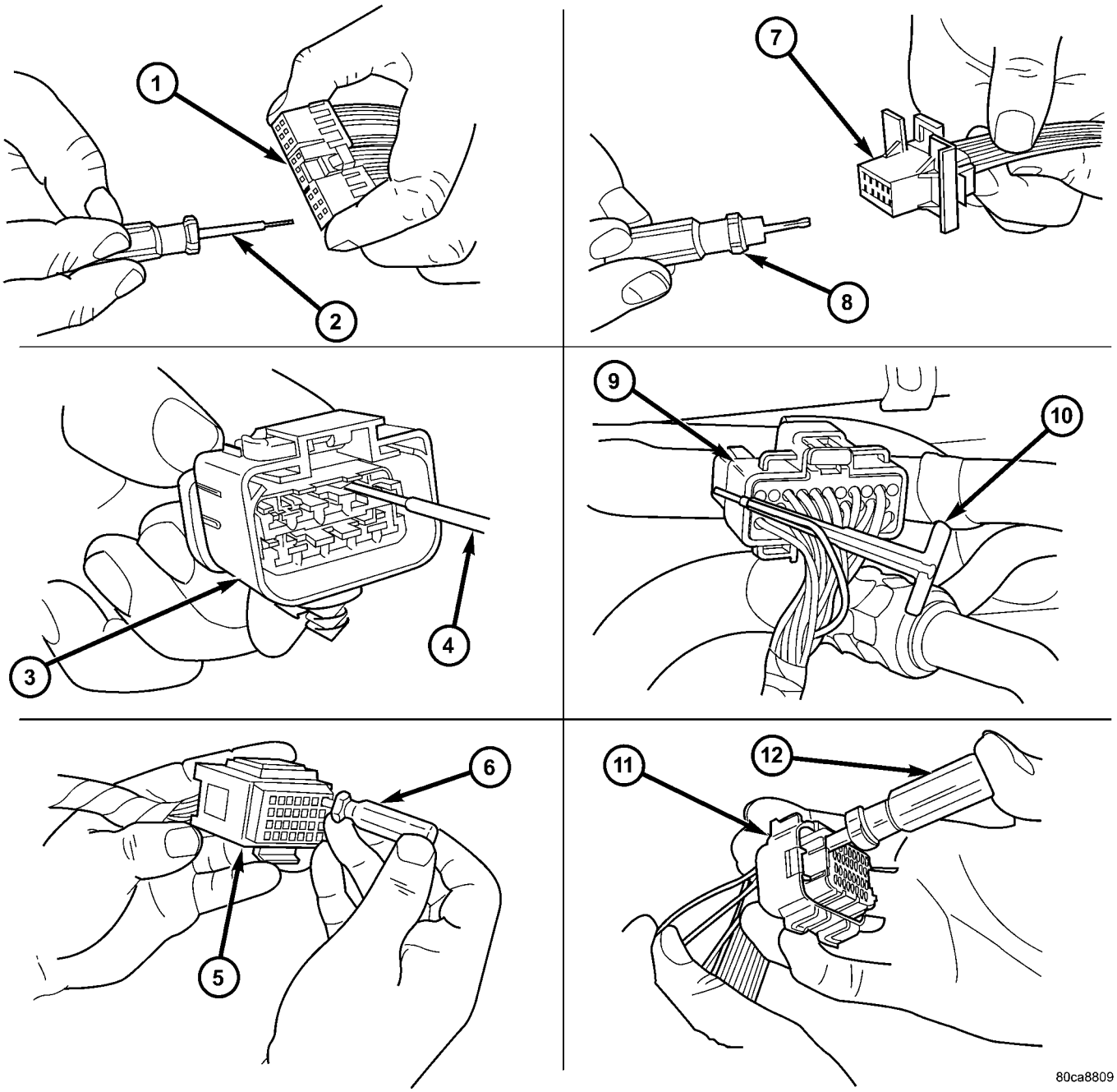

Fig. 12 TERMINAL REMOVAL

1 - TYPICAL CONNECTOR
2 - PICK FROM SPECIAL TOOL KIT 6680
3 - APEX CONNECTOR
4 - PICK FROM SPECIAL TOOL KIT 6680
5 - AUGAT CONNECTOR
6 - SPECIAL TOOL 6932
7 - MOLEX CONNECTOR
8 - SPECIAL TOOL 6742
9 - THOMAS AND BETTS CONNECTOR
10 - SPECIAL TOOL 6934
11 - TYCO CONNECTOR
12 - SPECIAL TOOL 8638

DIODE

REMOVAL

(1) Disconnect the battery.

(2) Locate the diode in the harness, and remove the protective covering.

(3) Remove the diode from the harness, pay attention to the current flow direction (Fig. 13).

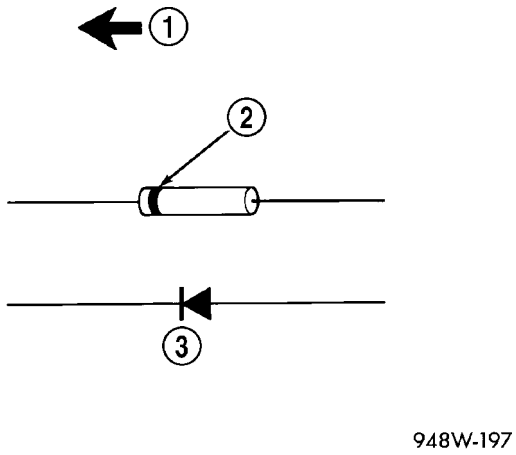

Fig. 13 DIODE IDENTIFICATION

1 - CURRENT FLOW
2 - BAND AROUND DIODE INDICATES CURRENT FLOW
3 - DIODE AS SHOWN IN THE DIAGRAMS

INSTALLATION

(1) Remove the insulation from the wires in the harness. Only remove enough insulation to solder in the new diode.

(2) Install the new diode in the harness, making sure current flow is correct. If necessary, refer to the appropriate wiring diagram for current flow (Fig. 13).

(3) Solder the connection together using rosin core type solder only. **Do not use acid core solder.**

(4) Tape the diode to the harness using electrical tape. Make sure the diode is completely sealed from the elements.

(5) Re-connect the battery and test affected systems.

TERMINAL

REMOVAL

(1) Follow steps for removing terminals described in the connector removal section.

(2) Cut the wire 6 inches from the back of the connector.

INSTALLATION

(1) Select a wire from the terminal repair kit that best matches the color and gage of the wire being repaired.

(2) Cut the repair wire to the proper length and remove one–half (1/2) inch of insulation.

(3) Splice the repair wire to the wire harness (see wire splicing procedure).

(4) Insert the repaired wire into the connector.

(5) Install the connector locking wedge, if required, and reconnect the connector to its mating half/component.

(6) Re-tape the wire harness starting at 1–1/2 inches behind the connector and 2 inches past the repair.

(7) Connect battery and test all affected systems.

WIRE

STANDARD PROCEDURE - WIRE SPLICING

When splicing a wire, it is important that the correct gage be used as shown in the wiring diagrams.

(1) Remove one-half (1/2) inch of insulation from each wire that needs to be spliced.

(2) Place a piece of adhesive lined heat shrink tubing on one side of the wire. Make sure the tubing will be long enough to cover and seal the entire repair area.

(3) Place the strands of wire overlapping each other inside of the splice clip (Fig. 14).

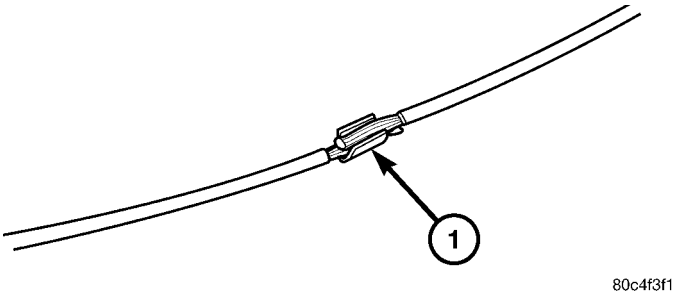

Fig. 14 SPLICE BAND

1 - SPLICE BAND

(4) Using crimping tool, Mopar p/n 05019912AA, crimp the splice clip and wires together (Fig. 15).

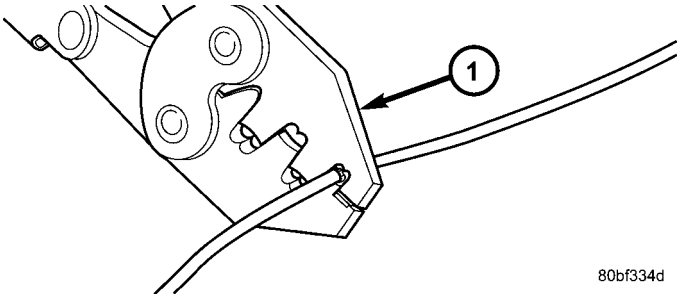

Fig. 15 CRIMPING TOOL

1 - CRIMPING TOOL

(5) Solder the connection together using rosin core type solder only (Fig. 16).

CAUTION: DO NOT USE ACID CORE SOLDER.

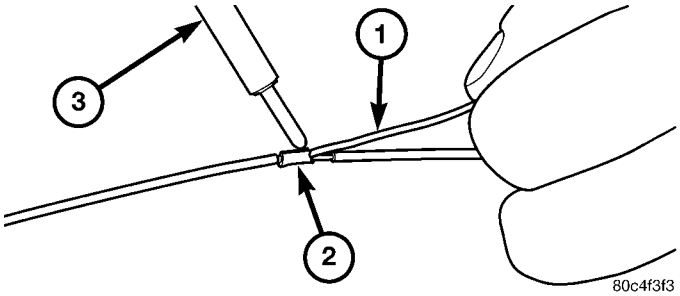

Fig. 16 SOLDER SPLICE

1 - SOLDER
2 - SPLICE BAND
3 - SOLDERING IRON

(6) Center the heat shrink tubing over the joint and heat using a heat gun. Heat the joint until the tubing is tightly sealed and sealant comes out of both ends of the tubing (Fig. 17).

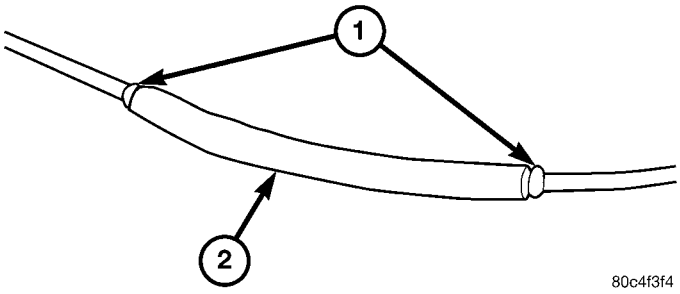

Fig. 17 HEAT SHRINK TUBE

1 - SEALANT
2 - HEAT SHRINK TUBE

8W-02 COMPONENT INDEX

Component	Page
A/C Compressor Clutch Relay	8W-42
A/C Compressor Clutch	8W-42
A/C High Pressure Switch	8W-42
A/C Low Pressure Switch	8W-42
A/C Pressure Transducer	8W-42
A/C-Heater Control Switch	8W-42
Accelerator Pedal Position Sensor	8W-30
Airbag Control Module	8W-43
Airbag Squibs	8W-43
Ambient Temperature Sensor	8W-49
Ambient Temperature Sensor-NGC	8W-30
Auto Shut Down Relay	8W-30
Autostick Switch	8W-31
Back-Up Lamp Switch	8W-51
Back-Up Lamps	8W-51
Battery Jump Post	8W-10
Battery Temperature Sensor	8W-20
Battery	8W-20
Blower Motor Resistor Block	8W-42
Blower Motor	8W-42
Boost Pressure Sensor	8W-30
Brake Lamp Switch	8W-30
Brake Transmission Shift Interlock Solenoid	8W-31
Brake Warning Indicator Switch	8W-30
Cabin Heater Relays	8W-30
Cabin Heater	8W-30
Camshaft Position Sensor	8W-30
Cargo Lamp	8W-44
Center High Mounted Stop Lamp	8W-51
Center Stack Lamp	8W-44
Cigar Lighter	8W-41
Circuit Breaker No. 2	8W-11
City Lamps	8W-50
Clockspring	8W-33, 41, 43
Clutch Pedal Position Switch	8W-30
Controller Antilock Brake	8W-35
Crankshaft Position Sensor	8W-30
Cylinder Lock Switches	8W-61
Data Link Connector	8W-18
Dome Lamp	8W-44
Dome Lamp/Intrusion Sensor	8W-44
Door Ajar Switches	8W-40, 61
Door Lock Switches	8W-61
Door Power Lock Motor/Ajar Switches	8W-61
Door Power Lock Motors	8W-61
EGR Solenoid	8W-30
Electronic Throttle Control Module	8W-30
Engine Control Module	8W-30
Engine Coolant Temperature Sensor	8W-30
Engine Oil Pressure Switch	8W-30
EVAP/Purge Solenoid	8W-30
Fog Lamps	8W-50, 51
Front Power Window Switch	8W-60
Front Washer Pump Motor	8W-53
Front Wiper Motor	8W-53
Front Wiper/Washer Switch	8W-53
Fuel Heater Module	8W-30
Fuel Heater Relay	8W-30
Fuel Injectors	8W-30
Fuel Pressure Sensor	8W-30
Fuel Pressure Solenoid	8W-30
Fuel Pump Module	8W-30
Fuel Pump Relay	8W-30
Fuse Block	8W-11
Fuses	8W-10, 11
Fusible Link	8W-10
Generator	8W-20
Glow Plugs	8W-30
Grounds	8W-15
Headlamp Leveling Modules	8W-50
Headlamp Leveling Switch	8W-50
Headlamp Relay	8W-50
Headlamp Switch	8W-50, 51
Headlamps	8W-50
Heated Seat Backs	8W-63
Heated Seat Cushions	8W-63
Heated Seat Module	8W-63
Heated Seat Relay	8W-63
Heated Seat Switches	8W-63
High Speed Radiator Fan Relay	8W-42
Hood Ajar Switch	8W-39
Horn Relay	8W-41
Horn Switch	8W-41
Horns	8W-41
Idle Air Control Motor	8W-30
Ignition Coil	8W-30
Ignition Switch	8W-10
Inlet Air Temperature Sensor	8W-30
Input Speed Sensor	8W-31
Instrument Cluster	8W-40
Knock Sensor	8W-30
License Lamps	8W-51
Liftgate Ajar Switch	8W-40
Liftgate Cylinder Lock Switch	8W-61
Liftgate Power Lock Motor	8W-61
Low Speed Radiator Fan Relay	8W-42
Manifold Absolute Pressure Sensor	8W-30
Map/Reading Lamps	8W-44
Mass Air Flow Sensor	8W-30
Mirror Switch	8W-62
Multi-Function Switch	8W-40, 52
Natural Vacuum Leak Detection Assembly	8W-30
Noise Suppressor	8W-30

Component	Page
Output Speed Sensor	8W-31
Overhead Console Module	8W-49
Oxygen Sensors	8W-30
Park/Turn Signal Lamps	8W-50
Parking Brake Switch	8W-40
PCV Heater	8W-30
Positive Jump Start Attachment	8W-10
Power Distribution Center	8W-10
Power Mirror Switch	8W-62
Power Mirrors	8W-62
Power Outlet	8W-41
Power Seat Motor	8W-63
Power Seat Switch	8W-63
Power Steering Pressure Switch	8W-30
Power Sunroof Module	8W-64
Power Window Motors	8W-60
Power Window Switches	8W-60
Powertrain Control Module	8W-30
Radiator Fan Motor	8W-42
Radio	8W-47
Rear Power Outlet	8W-41
Rear Window Defogger Switch	8W-48
Rear Window Defogger	8W-48
Rear Wiper Motor	8W-53
Rear Wiper Switch	8W-53
Remote Keyless Entry Antenna	8W-39
Remote Keyless Entry Module	8W-39
Seat Belt Switches	8W-40
Seat Belt Tensioners	8W-43
Sentry Key Immobilizer Module	8W-39
Side Impact Sensors	8W-43
Side Markers	8W-52
Siren	8W-39
Speakers	8W-47
Speed Control Servo	8W-33
Speed Control Switch	8W-33
Splices	8W-70
Starter Motor Relay	8W-21
Starter Motor	8W-21
Stop Lamp	8W-51
Sunroof Motor	8W-64
Sunroof Switch	8W-64
Surge Solenoid	8W-30
Swirl Solenoid	8W-30
Tail Lamp	8W-51
Tail/Stop Lamps	8W-51
Throttle Inlet Pressure Sensor	8W-30
Throttle Inlet Pressure Solenoid	8W-30
Throttle Position Sensor	8W-30
Traction Control Switch	8W-35
Transmission Control Relay	8W-31
Transmission Range Indicator Illumination	8W-44
Transmission Range Sensor	8W-31
Transmission Solenoid/Pressure Switch Assembly	8W-31
Turn Signal Indicators	8W-52
Turn Signal Lamps	8W-52
Vehicle Speed Sensor	8W-30
Visor/Vanity Lamps	8W-44
Wastegate Solenoid	8W-30

8W-10 POWER DISTRIBUTION

Component	Page
A/C Compressor Clutch Relay	8W-10-10, 16, 21
A/C Compressor Clutch	8W-10-16
Auto Shut Down Relay	8W-10-17, 19, 20, 21
Autostick Switch	8W-10-29
Battery Jump Post	8W-10-9, 32
Battery	8W-10-8, 9, 10
Brake Lamp Switch	8W-10-10, 16
Cabin Heater Relay No. 1	8W-10-10, 15, 21
Cabin Heater Relay No. 2	8W-10-9, 21, 32
Cabin Heater	8W-10-15, 32
Camshaft Position Sensor	8W-10-22
Center High Mounted Stop Lamp	8W-10-16
Cigar Lighter	8W-10-28
Circuit Breaker No. 2 (FB)	8W-10-30
Controller Antilock Brake	8W-10-10, 12, 14, 16
Data Link Connector	8W-10-17
EGR Solenoid	8W-10-21
Engine Control Module	8W-10-16, 17, 22, 30
Fuel Heater Module	8W-10-32
Fuel Heater Relay	8W-10-9, 26, 32
Fuel Injector No. 1	8W-10-18, 19, 20
Fuel Injector No. 2	8W-10-18, 19, 20
Fuel Injector No. 3	8W-10-18, 19, 20
Fuel Injector No. 4	8W-10-18, 19, 20
Fuel Pressure Solenoid	8W-10-22
Fuel Pump Module	8W-10-17, 26
Fuel Pump Relay	8W-10-11, 17, 22, 26
Fuse 1	8W-10-10, 12, 15, 28
Fuse 2	8W-10-10, 12, 15
Fuse 3	8W-10-10, 13, 15, 28
Fuse 4	8W-10-10, 13
Fuse 5	8W-10-10, 14, 30
Fuse 6	8W-10-30
Fuse 7	8W-10-10, 14, 30
Fuse 8	8W-10-10, 15, 27
Fuse 9	8W-10-10, 15, 31
Fuse 10	8W-10-10, 15, 31
Fuse 11	8W-10-10, 16, 31
Fuse 12	8W-10-10, 11, 16, 31
Fuse 13	8W-10-10, 11, 17, 25
Fuse 14	8W-10-11, 23, 31
Fuse 15	8W-10-11, 23, 31
Fuse 16	8W-10-12, 28, 29
Fuse 16/17	8W-10-11, 24
Fuse 17	8W-10-13
Fuse 18	8W-10-11, 15, 25
Fuse 19	8W-10-11, 26
Fuse 20	8W-10-11, 26, 28
Fuse 21	8W-10-11, 26
Fuse 22	8W-10-11, 27
Fuse Block	8W-10-10, 11, 12, 13, 15, 25, 27, 29, 30, 31
Fusible Link	8W-10-8, 9, 32
Generator	8W-10-8, 9, 18, 22
Glow Plug No. 1	8W-10-32
Glow Plug No. 2	8W-10-32
Glow Plug No. 3	8W-10-32
Glow Plug No. 4	8W-10-32
Glow Plug Relay	8W-10-9, 21, 32
Headlamp Relay	8W-10-27
Headlamp Switch	8W-10-11, 24, 27
Heated Seat Relay	8W-10-13
High Note Horn	8W-10-23
High Speed Radiator Fan Relay	8W-10-14, 21
Horn Relay	8W-10-11, 23
Ignition Coil	8W-10-18, 19, 20
Ignition Switch	8W-10-10, 11, 12, 13, 26, 28, 29, 30, 31
Instrument Cluster	8W-10-27, 29
Left High Beam Headlamp	8W-10-24
Left Power Mirror	8W-10-15
Left Rear Fog Lamp	8W-10-27
Left Tail/Stop Lamp	8W-10-16
Low Note Horn	8W-10-23
Low Speed Radiator Fan Relay	8W-10-14, 22
Mass Air Flow Sensor	8W-10-22
Mega Fuse	8W-10-9
Multi-Function Switch	8W-10-11, 26
Noise Suppressor	8W-10-18, 19, 20
Oxygen Sensor 1/1 Upstream	8W-10-18
Oxygen Sensor 1/2 Downstream	8W-10-18
PCV Heater	8W-10-26
Positive Jump Start Attachment	8W-10-11
Power Distribution Center	8W-10-2, 3, 8, 9, 10, 11, 12, 13, 14, 15, 16, 17, 23, 24, 25, 26, 27, 28
Power Outlet	8W-10-11, 26, 28
Power Seat Switch	8W-10-13
Powertrain Control Module	8W-10-16, 17, 18, 19, 20, 23, 30
Radiator Fan Motor	8W-10-14
Radiator Fan Motor	8W-10-20
Radiator Fan Motor	8W-10-8
Radio	8W-10-25
Rear Window Defogger Switch	8W-10-10, 15
Rear Window Defogger	8W-10-15, 28
Right High Beam Headlamp	8W-10-24
Right Power Mirror	8W-10-15
Right Rear Fog Lamp	8W-10-27
Right Tail/Stop Lamp	8W-10-16
Siren	8W-10-11, 25
Starter Motor Relay	8W-10-12, 30
Starter Motor	8W-10-8, 9, 12
Surge Solenoid	8W-10-20
Swirl Solenoid	8W-10-22
Transmission Control Relay	8W-10-11, 23
Transmission Solenoid/Pressure Switch Assembly	8W-10-23
Wastegate Solenoid	8W-10-22

POWER DISTRIBUTION CENTER
GAS

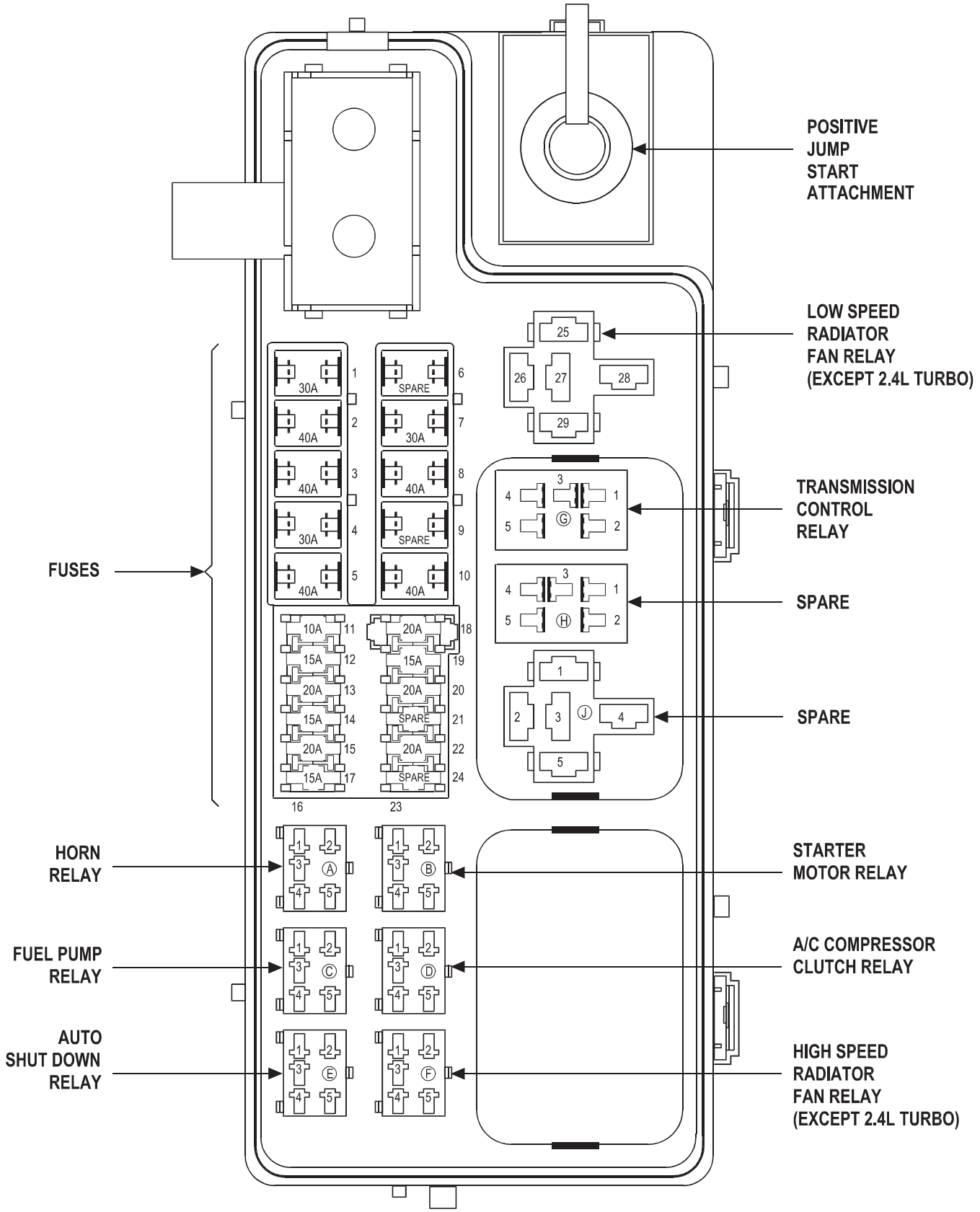

POWER DISTRIBUTION CENTER
DIESEL

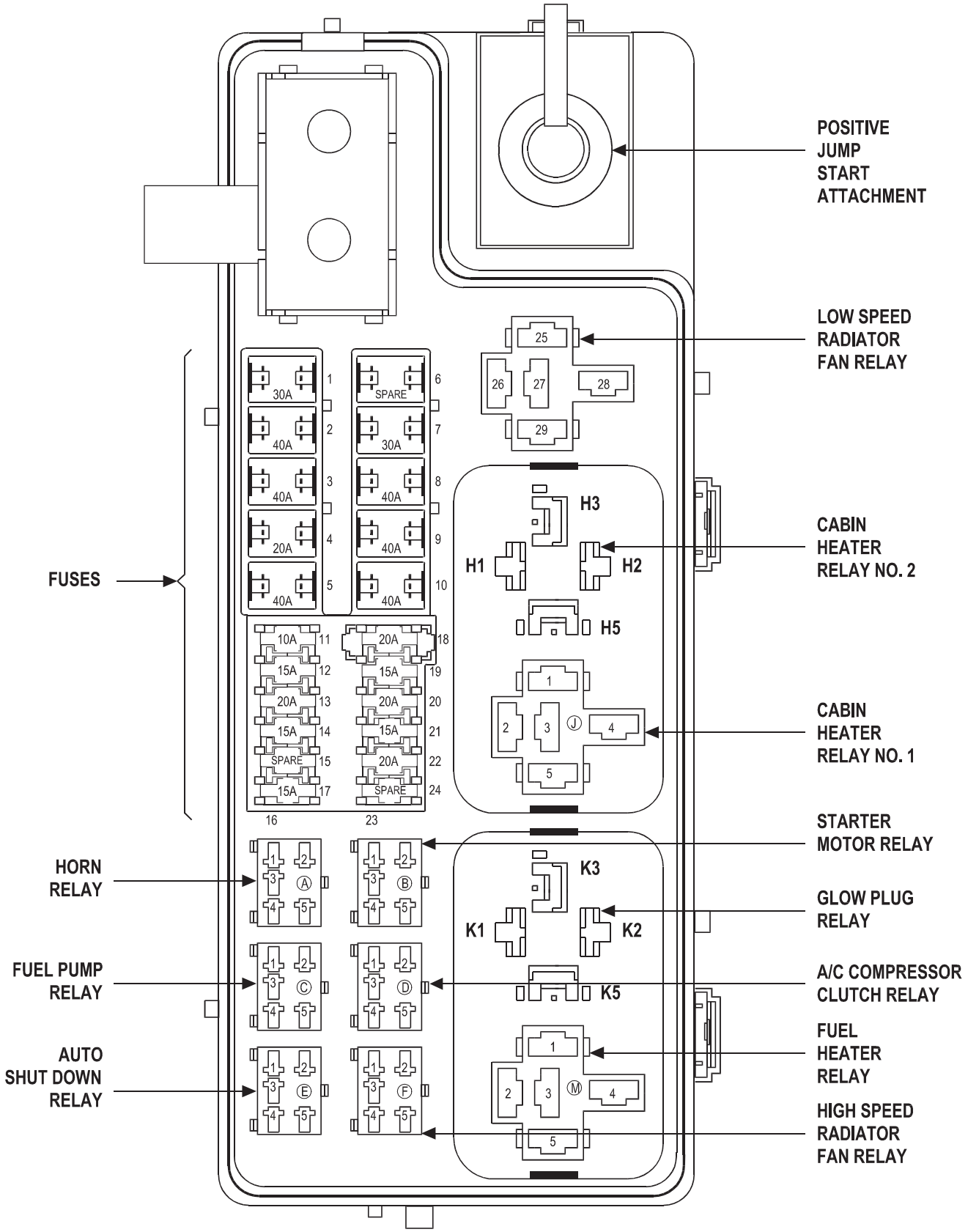

FUSES

FUSE	AMPS	FUSED CIRCUIT	FUNCTION
1	30A	A1 14RD	FUSED B(+)
2	40A	A10 12RD/DG □	FUSED B(+)
3	40A	A2 12PK/BK ◐ ●● ◐◐	FUSED B(+)
3	40A	A2 12BK/PK ● ◐◐	FUSED B(+)
4	20A	A35 14DB ◐◐ △	FUSED B(+)
4	30A	A35 14DB ◐ △△	FUSED B(+)
5	40A	A16 12GY ###	FUSED B(+)
6	-	-	-
7	30A	A20 12RD/DB □	FUSED B(+)
8	40A	A4 12BK/PK	FUSED B(+)
9	40A	A122 12RD ◐◐	FUSED B(+)
10	40A	A3 12RD/WT	FUSED B(+)
11	10A	A17 20RD/BK	FUSED B(+)
12	15A	F32 18PK/DB	FUSED B(+)
13	20A	A14 16RD/WT ◐ ●●●	FUSED B(+)
13	20A	A14 14RD/WT ◐◐	FUSED B(+)
13	20A	A14 18RD/WT □□□	FUSED B(+)
14	15A	F62 20RD	FUSED B(+)
		F62 20RD	FUSED B(+)
15	20A	A30 16RD/WT ### ■■	FUSED B(+)
15	20A	A30 18RD/WT ## ■■	FUSED B(+)
16/17	15A	L33 16LG/BR	FUSED DIMMER SWITCH HIGH BEAM OUTPUT
18	20A	M11 16PK/LB ▽▽▽	FUSED B(+)
18	20A	M11 16PK/LB ●●●	FUSED B(+)
18	20A	M11 16PK/LG □□	FUSED B(+)
18	20A	M11 16PK/LG □□□	FUSED B(+)
19	15A	A15 18PK/DG	FUSED B(+)
20	20A	F1 16DB/BK	FUSED B(+)
21	15A	A140 16DG/WT ◐◐	FUSED B(+)
22	20A	F39 16PK/LG ▲▲	FUSED B(+)
23/24	-	-	-

2.4L TURBO
EXCEPT 2.4L TURBO
□ ABS
□□ 2.0L RHD
□□□ 2.0L RHD MTX

◐ GAS
◐◐ DIESEL
● LHD
●● RHD
●●● EXCEPT 2.0L RHD MTX

△ HEATED SEATS
△△ POWER/HEATED SEATS
▲▲ EXPORT
■■ EATX
▽▽▽ EXPORT EXCEPT 2.0L RHD MTX

RELAYS

A/C COMPRESSOR CLUTCH RELAY

CAVITY	CIRCUIT	FUNCTION
D1	C3 20DB/BK	A/C COMPRESSOR CLUTCH RELAY OUTPUT
D2	C28 20DB/OR	A/C COMPRESSOR CLUTCH RELAY CONTROL
D2	C28 20DB/OR ## ▼▼▼	A/C CLUTCH RELAY CONTROL
D3	-	-
D4	F18 20LG/BK ◐	FUSED IGNITION SWITCH OUTPUT (RUN-START)
D4	A142 16DG/OR ◐◐	AUTOMATIC SHUT DOWN RELAY OUTPUT
D5	A17 20RD/BK	FUSED B(+)

AUTO SHUT DOWN RELAY

CAVITY	CIRCUIT	FUNCTION
E1	A142 16DG/OR ◐	AUTOMATIC SHUT DOWN RELAY OUTPUT
E1	A142 14DG/OR ◐◐	AUTOMATIC SHUT DOWN RELAY OUTPUT
E2	K51 20DB/YL	AUTOMATIC SHUT DOWN RELAY CONTROL
E3	-	-
E4	A14 16RD/WT ●●●	FUSED B(+)
E4	A14 18RD/WT □□□	FUSED B(+)
E5	A14 16RD/WT ◐●●●	FUSED B(+)
E5	A14 14RD/WT ◐◐	FUSED B(+)
E5	A14 18RD/WT □□□	FUSED B(+)

CABIN HEATER RELAY NO. 1 (DIESEL)

CAVITY	CIRCUIT	FUNCTION
J1	A142 16DG/OR	AUTOMATIC SHUT DOWN RELAY OUTPUT
J2	K132 12VT	CABIN HEATER RELAY NO. 1 OUTPUT
J3	-	-
J4	A122 12RD	FUSED B(+)
J5	C41 20LB/DG	CABIN HEATER RELAY NO. 1 CONTROL

CABIN HEATER RELAY NO. 2 (DIESEL)

CAVITY	CIRCUIT	FUNCTION
H1	A142 16DG/OR	AUTOMATIC SHUT DOWN RELAY OUTPUT
H2	C42 20LB/GY	CABIN HEATER RELAY NO. 2 CONTROL
H3	A222 10RD/LB	FUSED B(+)
H4	-	-
H5	K232 10YL	CABIN HEATER RELAY NO. 2 OUTPUT

2.4L TURBO
▼▼ 1.6L/DIESEL
▼▼▼ 2.0L/2.4L EXCEPT TURBO
◐ GAS
◐◐ DIESEL
□□□ 2.0L RHD MTX
●●● EXCEPT 2.0L RHD MTX

RELAYS

FUEL HEATER RELAY (DIESEL)

CAVITY	CIRCUIT	FUNCTION
M1	A141 16DG/WT ●	FUEL PUMP RELAY OUTPUT
M1	A141 20DG/WT ●●	FUEL PUMP RELAY OUTPUT
M2	A93 14RD/BK	FUEL HEATER RELAY OUTPUT
M3	-	-
M4	A193 14RD/DB	FUSED B(+)
M5	Z320 20BK ●●	GROUND
M5	Z12 20BK/TN ●	GROUND

FUEL PUMP RELAY

CAVITY	CIRCUIT	FUNCTION
C1	A141 16DG/WT	FUEL PUMP RELAY OUTPUT
C2	K31 20BR	FUEL PUMP RELAY CONTROL
C3	-	-
C4	F12 20DB/WT ◐	FUSED IGNITION SWITCH OUTPUT (RUN-START)
C4	A142 16DG/OR ◐◐	AUTOMATIC SHUT DOWN RELAY OUTPUT
C5	A14 16RD/WT ◐	FUSED B(+)
C5	A140 16DG/WT ◐◐	FUSED B(+)

GLOW PLUG RELAY (DIESEL)

CAVITY	CIRCUIT	FUNCTION
K1	A142 16DG/OR	AUTOMATIC SHUT DOWN RELAY OUTPUT
K2	K152 20WT	GLOW PLUG RELAY CONTROL
K3	A54 10RD	FUSED B(+)
K4	-	-
K5	K154 10GY	GLOW PLUG RELAY OUTPUT

HIGH SPEED RADIATOR FAN RELAY (EXCEPT 2.4L TURBO)

CAVITY	CIRCUIT	FUNCTION
F1	C25 12YL	HIGH SPEED RADIATOR FAN RELAY OUTPUT
F2	C27 20DB/PK ▼▼	HIGH SPEED RADIATOR FAN RELAY CONTROL
F2	C27 20DB/PK ▼▼▼	HIGH SPEED RAD FAN RELAY CONTROL
F3	-	-
F4	F18 20LG/BK ◐	FUSED IGNITION SWITCH OUTPUT (RUN-START)
F4	A142 16DG/OR ◐◐	AUTOMATIC SHUT DOWN RELAY OUTPUT
F5	A16 12GY	FUSED B(+)

▼▼ 1.6L/DIESEL
▼▼▼ 2.0L/2.4L EXCEPT TURBO
◐ GAS
◐◐ DIESEL
● LHD
●● RHD

HORN RELAY

CAVITY	CIRCUIT	FUNCTION
A1	X2 20DG/RD	HORN RELAY OUTPUT
A2	X3 20BK/RD	HORN RELAY CONTROL
A3	-	-
A4	F62 20RD	FUSED B(+)
A5	F62 20RD	FUSED B(+)

LOW SPEED RADIATOR FAN RELAY (EXCEPT 2.4L TURBO)

CAVITY	CIRCUIT	FUNCTION
25	F18 20LG/BK ◐	FUSED IGNITION SWITCH OUTPUT (RUN-START)
25	A142 16DG/OR ◐◐	AUTOMATIC SHUT DOWN RELAY OUTPUT
26	C23 12DG	LOW SPEED RADIATOR FAN RELAY OUTPUT
27	-	-
28	A16 12GY	FUSED B(+)
29	C24 20YL/RD ▼▼	LOW SPEED RADIATOR FAN RELAY CONTROL
29	C24 20DB/WT ▼▼▼ ●●●	LOW SPEED RAD FAN RELAY CONTROL
29	C24 20DB/PK □□□	LOW SPEED RAD FAN RELAY CONTROL

STARTER MOTOR RELAY

CAVITY	CIRCUIT	FUNCTION
B1	T40 14BR	STARTER MOTOR RELAY OUTPUT
B2	K90 20TN	STARTER MOTOR RELAY CONTROL
B3	-	-
B4	A41 14YL	FUSED IGNITION SWITCH OUTPUT (START)
B5	A1 14RD	FUSED B(+)

TRANSMISSION CONTROL RELAY

CAVITY	CIRCUIT	FUNCTION
G1	T16 16RD	TRANSMISSION CONTROL RELAY OUTPUT
G2	Z1 20BK	GROUND
G3	-	-
G4	T15 20LG	TRANSMISSION CONTROL RELAY CONTROL
G5	A30 16RD/WT ###	FUSED B(+)
G5	A30 18RD/WT ##	FUSED B(+)

□□□ 2.0L RHD MTX
●●● EXCEPT 2.0L RHD MTX
◐ GAS
◐◐ DIESEL
2.4L TURBO
EXCEPT 2.4L TURBO
▼▼ 1.6L/DIESEL
▼▼▼ 2.0L/2.4L EXCEPT TURBO

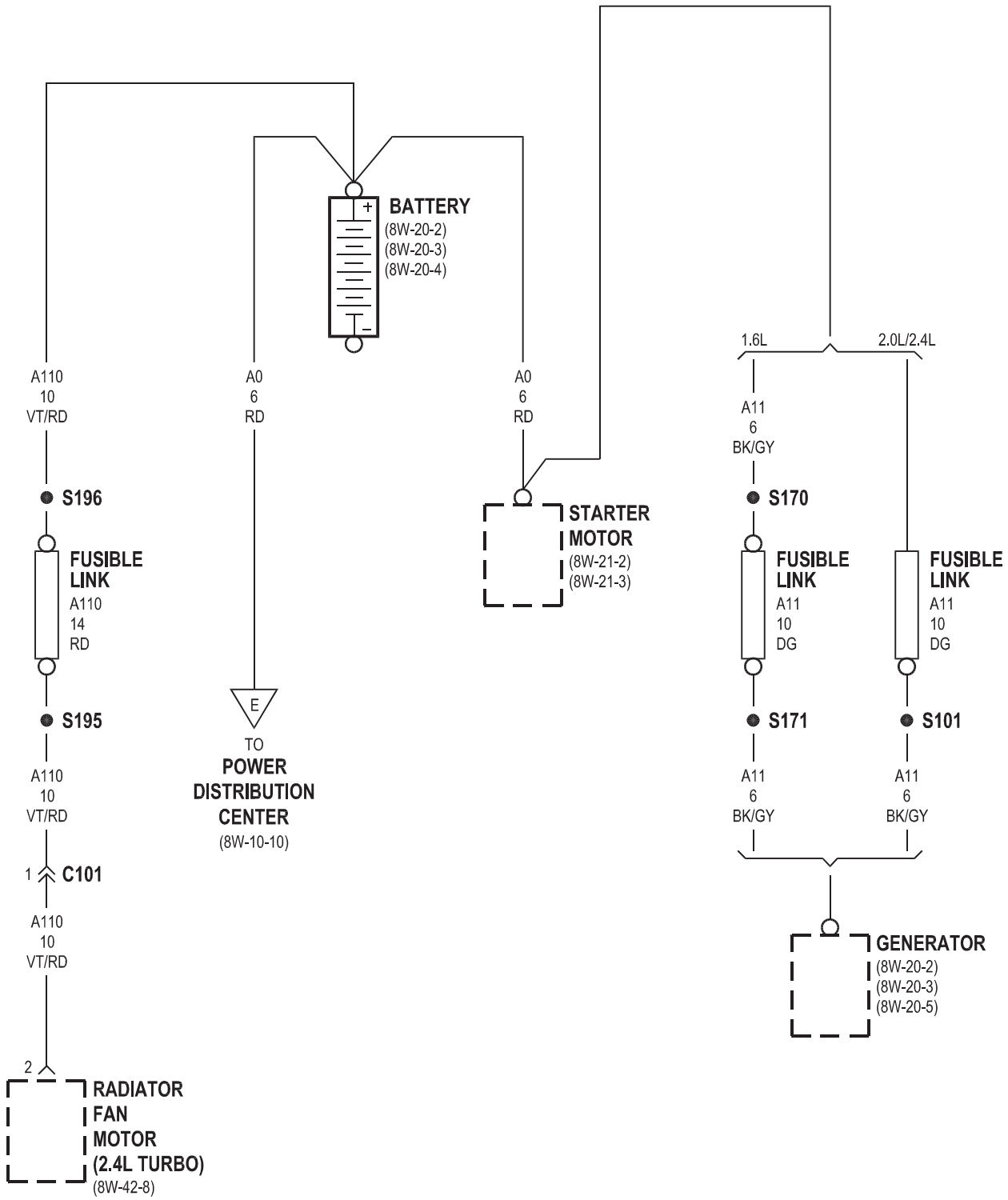
BATTERY
(8W-20-2)
(8W-20-3)
(8W-20-4)
A110
10
VT/RD
A0
6
RD
A0
6
RD
1.6L
2.0L/2.4L
A11
6
BK/GY
S196
S170
STARTER
MOTOR
(8W-21-2)
(8W-21-3)
FUSIBLE
LINK
A110
14
RD
FUSIBLE
LINK
A11
10
DG
FUSIBLE
LINK
A11
10
DG
S195
E
TO
POWER
DISTRIBUTION
CENTER
(8W-10-10)
S171
S101
A110
10
VT/RD
A11
6
BK/GY
A11
6
BK/GY
1
C101
A110
10
VT/RD
GENERATOR
(8W-20-2)
(8W-20-3)
(8W-20-5)
2
RADIATOR
FAN
MOTOR
(2.4L TURBO)
(8W-42-8)

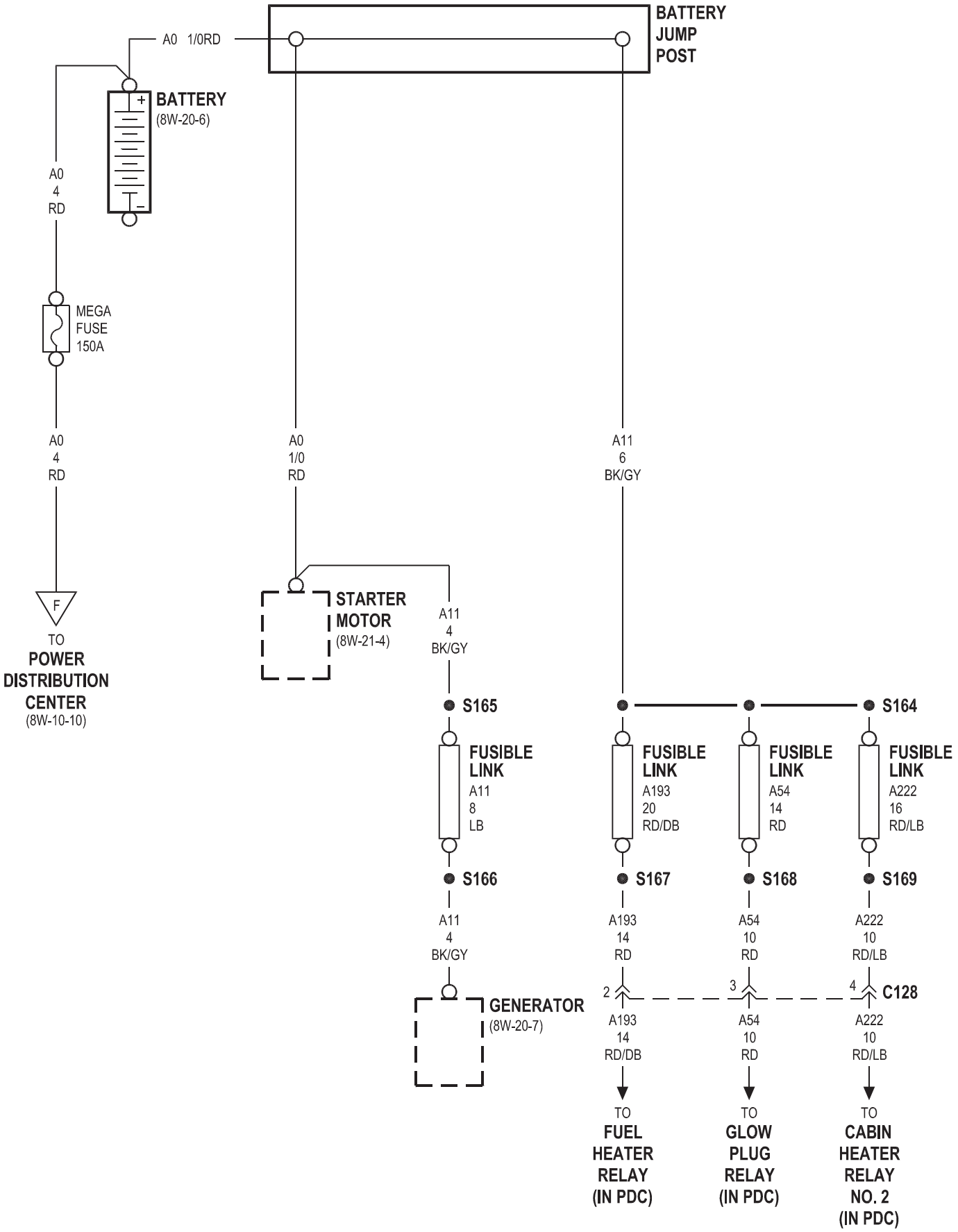
BATTERY JUMP POST
A0 1/0RD
BATTERY
(8W-20-6)
A0
4
RD
MEGA
FUSE
150A
A0
4
RD
F
TO
POWER
DISTRIBUTION
CENTER
(8W-10-10)
A0
1/0
RD
STARTER
MOTOR
(8W-21-4)
A11
4
BK/GY
A11
6
BK/GY
S165
S164
FUSIBLE
LINK
A11
8
LB
FUSIBLE
LINK
A193
20
RD/DB
FUSIBLE
LINK
A54
14
RD
FUSIBLE
LINK
A222
16
RD/LB
S166
S167
S168
S169
A11
4
BK/GY
A193
14
RD
A54
10
RD
A222
10
RD/LB
2
3
4
C128
GENERATOR
(8W-20-7)
A193
14
RD/DB
A54
10
RD
A222
10
RD/LB
TO
FUEL
HEATER
RELAY
(IN PDC)
TO
GLOW
PLUG
RELAY
(IN PDC)
TO
CABIN
HEATER
RELAY
NO. 2
(IN PDC)

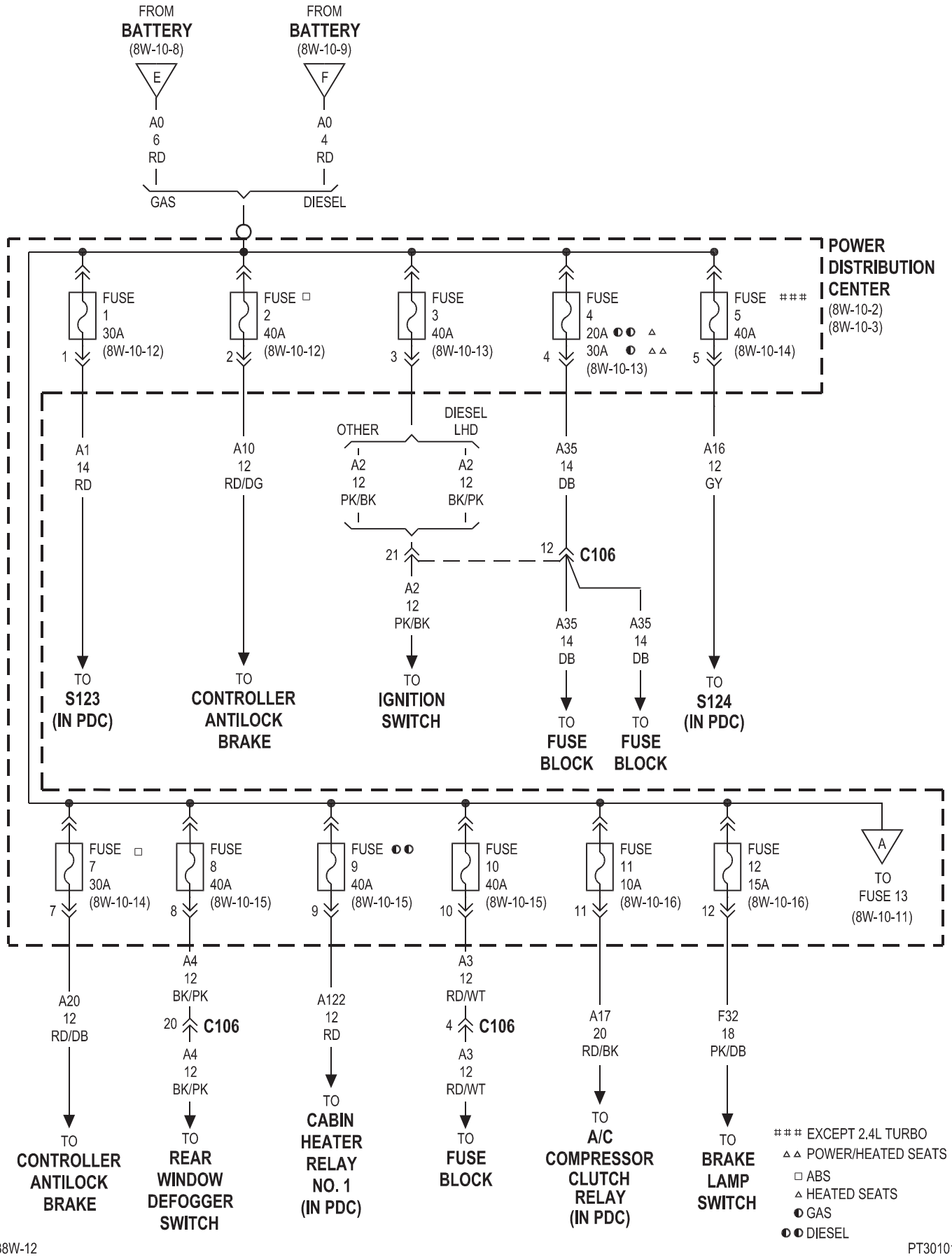
FROM BATTERY (8W-10-8)
E
A0 6 RD
GAS
FROM BATTERY (8W-10-9)
F
A0 4 RD
DIESEL
POWER DISTRIBUTION CENTER (8W-10-2) (8W-10-3)
FUSE 1 30A (8W-10-12)
FUSE □ 2 40A (8W-10-12)
FUSE 3 40A (8W-10-13)
FUSE 4 20A ◐◐ △ 30A ◐ △△ (8W-10-13)
FUSE ### 5 40A (8W-10-14)
A1 14 RD
TO S123 (IN PDC)
A10 12 RD/DG
TO CONTROLLER ANTILOCK BRAKE
OTHER
DIESEL LHD
A2 12 PK/BK
A2 12 BK/PK
21
A2 12 PK/BK
TO IGNITION SWITCH
A35 14 DB
12 C106
A35 14 DB
TO FUSE BLOCK
A35 14 DB
TO FUSE BLOCK
A16 12 GY
TO S124 (IN PDC)
FUSE □ 7 30A (8W-10-14)
FUSE 8 40A (8W-10-15)
FUSE ◐◐ 9 40A (8W-10-15)
FUSE 10 40A (8W-10-15)
FUSE 11 10A (8W-10-16)
FUSE 12 15A (8W-10-16)
A
TO FUSE 13 (8W-10-11)
A20 12 RD/DB
TO CONTROLLER ANTILOCK BRAKE
A4 12 BK/PK
20 C106
A4 12 BK/PK
TO REAR WINDOW DEFOGGER SWITCH
A122 12 RD
TO CABIN HEATER RELAY NO. 1 (IN PDC)
A3 12 RD/WT
4 C106
A3 12 RD/WT
TO FUSE BLOCK
A17 20 RD/BK
TO A/C COMPRESSOR CLUTCH RELAY (IN PDC)
F32 18 PK/DB
TO BRAKE LAMP SWITCH
EXCEPT 2.4L TURBO
△△ POWER/HEATED SEATS
□ ABS
△ HEATED SEATS
◐ GAS
◐◐ DIESEL

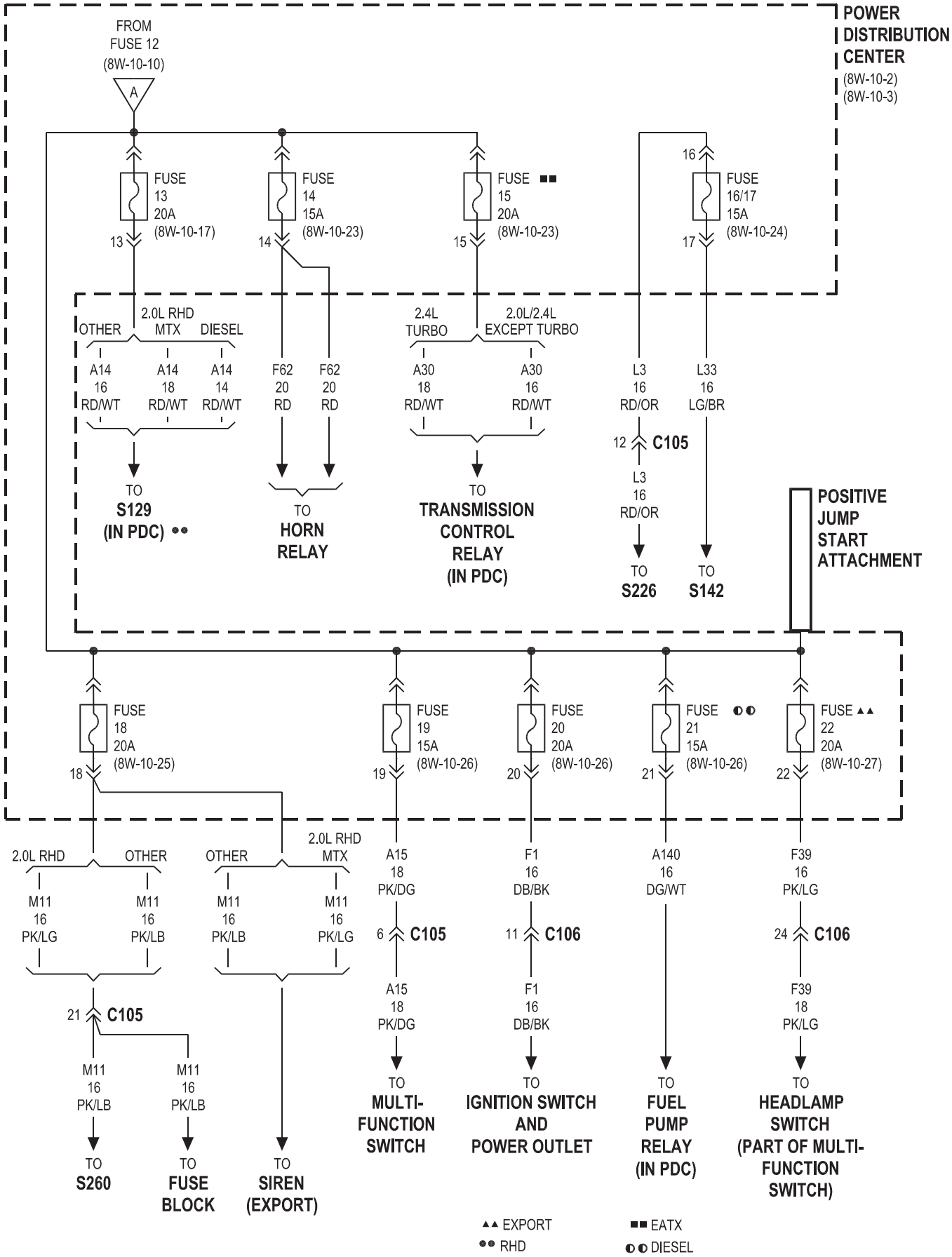
POWER DISTRIBUTION CENTER
(8W-10-2)
(8W-10-3)
FROM FUSE 12 (8W-10-10)
A
FUSE 13 20A (8W-10-17)
FUSE 14 15A (8W-10-23)
FUSE ■■ 15 20A (8W-10-23)
FUSE 16/17 15A (8W-10-24)
OTHER
2.0L RHD MTX
DIESEL
2.4L TURBO
2.0L/2.4L EXCEPT TURBO
A14 16 RD/WT
A14 18 RD/WT
A14 14 RD/WT
F62 20 RD
F62 20 RD
A30 18 RD/WT
A30 16 RD/WT
L3 16 RD/OR
L33 16 LG/BR
C105
L3 16 RD/OR
TO S129 (IN PDC) ●●
TO HORN RELAY
TO TRANSMISSION CONTROL RELAY (IN PDC)
TO S226
TO S142
POSITIVE JUMP START ATTACHMENT
FUSE 18 20A (8W-10-25)
FUSE 19 15A (8W-10-26)
FUSE 20 20A (8W-10-26)
FUSE ◐◐ 21 15A (8W-10-26)
FUSE ▲▲ 22 20A (8W-10-27)
2.0L RHD
OTHER
OTHER
2.0L RHD MTX
M11 16 PK/LG
M11 16 PK/LB
M11 16 PK/LB
M11 16 PK/LG
A15 18 PK/DG
F1 16 DB/BK
A140 16 DG/WT
F39 16 PK/LG
C105
C106
C106
C105
A15 18 PK/DG
F1 16 DB/BK
F39 18 PK/LG
M11 16 PK/LB
M11 16 PK/LB
TO S260
TO FUSE BLOCK
TO SIREN (EXPORT)
TO MULTI-FUNCTION SWITCH
TO IGNITION SWITCH AND POWER OUTLET
TO FUEL PUMP RELAY (IN PDC)
TO HEADLAMP SWITCH (PART OF MULTI-FUNCTION SWITCH)
▲▲ EXPORT
●● RHD
■■ EATX
◐◐ DIESEL

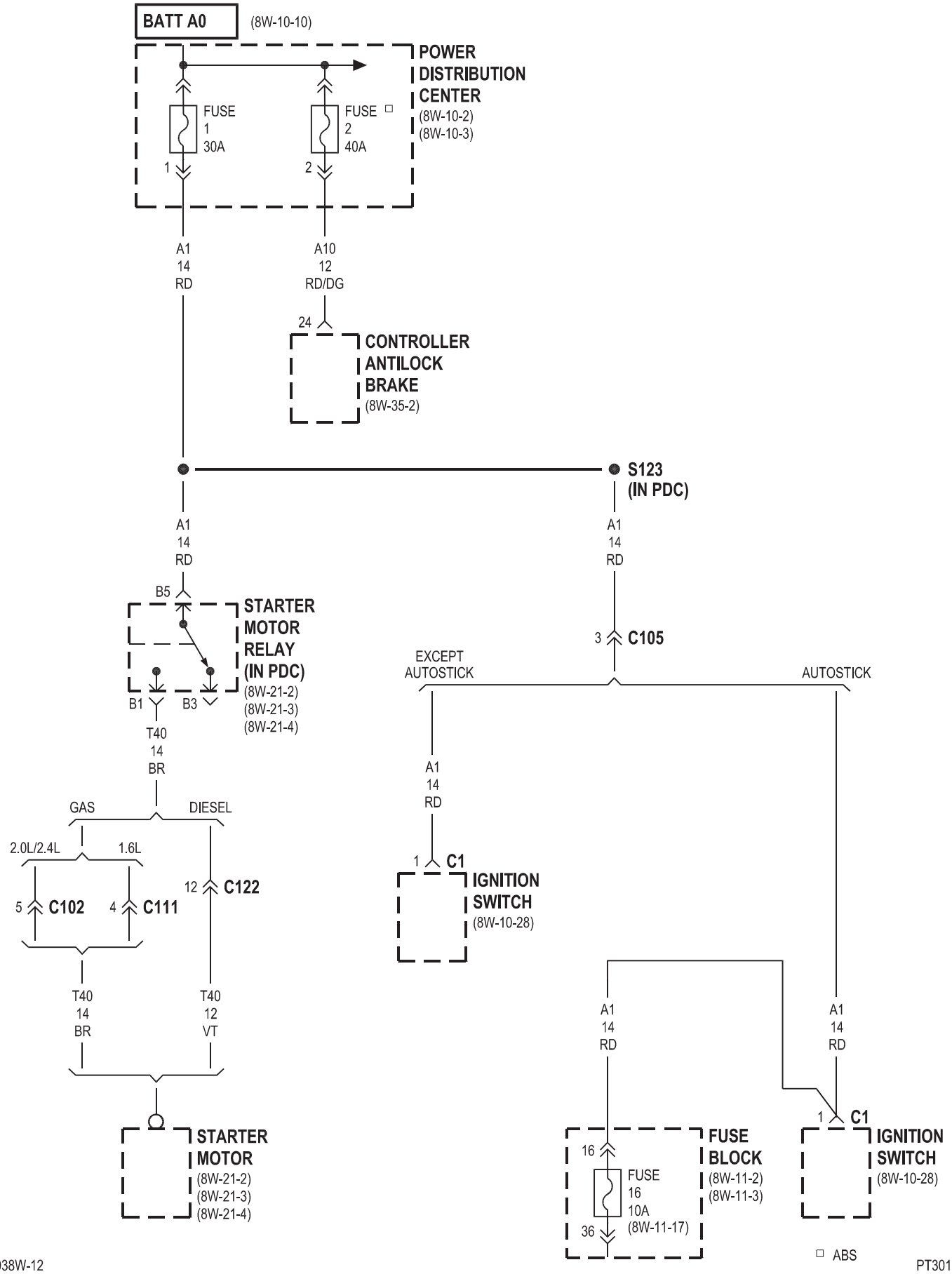
BATT A0
(8W-10-10)
POWER DISTRIBUTION CENTER
(8W-10-2)
(8W-10-3)
FUSE 1 30A
FUSE 2 40A
1
2
A1 14 RD
A10 12 RD/DG
24
CONTROLLER ANTILOCK BRAKE
(8W-35-2)
S123 (IN PDC)
A1 14 RD
A1 14 RD
B5
STARTER MOTOR RELAY (IN PDC)
(8W-21-2)
(8W-21-3)
(8W-21-4)
B1
B3
T40 14 BR
3
C105
EXCEPT AUTOSTICK
AUTOSTICK
A1 14 RD
1
C1
IGNITION SWITCH
(8W-10-28)
GAS
DIESEL
2.0L/2.4L
1.6L
5
C102
4
C111
12
C122
T40 14 BR
T40 12 VT
STARTER MOTOR
(8W-21-2)
(8W-21-3)
(8W-21-4)
A1 14 RD
A1 14 RD
16
FUSE 16 10A
(8W-11-17)
36
FUSE BLOCK
(8W-11-2)
(8W-11-3)
1
C1
IGNITION SWITCH
(8W-10-28)
ABS

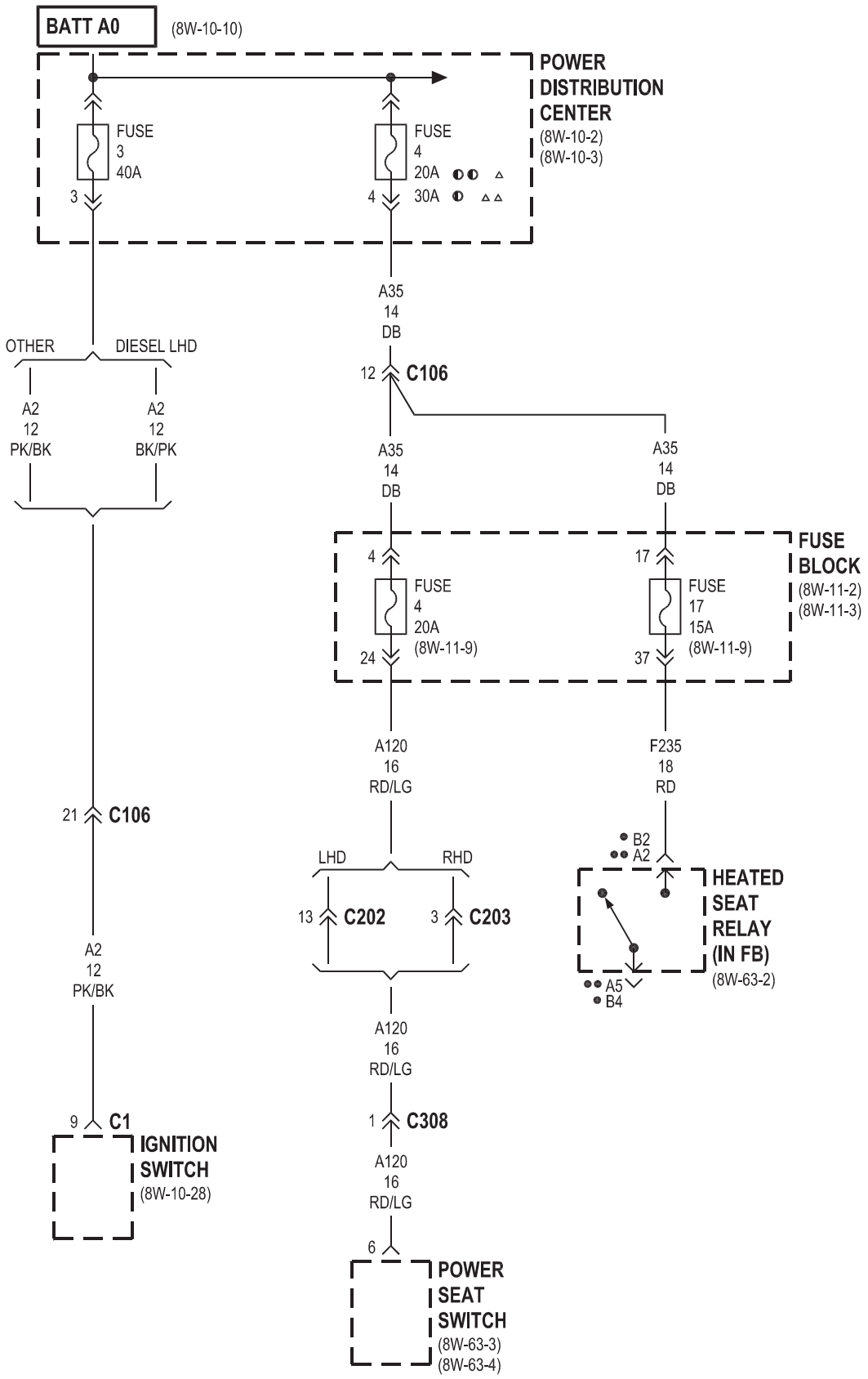
BATT A0
(8W-10-10)
POWER DISTRIBUTION CENTER
(8W-10-2)
(8W-10-3)
FUSE 3 40A
FUSE 4 20A 30A
3
4
A35 14 DB
OTHER
DIESEL LHD
A2 12 PK/BK
A2 12 BK/PK
12 C106
A35 14 DB
A35 14 DB
FUSE BLOCK
(8W-11-2)
(8W-11-3)
4
17
FUSE 4 20A
(8W-11-9)
FUSE 17 15A
(8W-11-9)
24
37
A120 16 RD/LG
F235 18 RD
21 C106
B2
A2
HEATED SEAT RELAY (IN FB)
(8W-63-2)
A5
B4
LHD
RHD
13 C202
3 C203
A2 12 PK/BK
A120 16 RD/LG
9 C1
IGNITION SWITCH
(8W-10-28)
1 C308
A120 16 RD/LG
6
POWER SEAT SWITCH
(8W-63-3)
(8W-63-4)
LHD
RHD
GAS
DIESEL
HEATED SEATS
POWER/HEATED SEATS

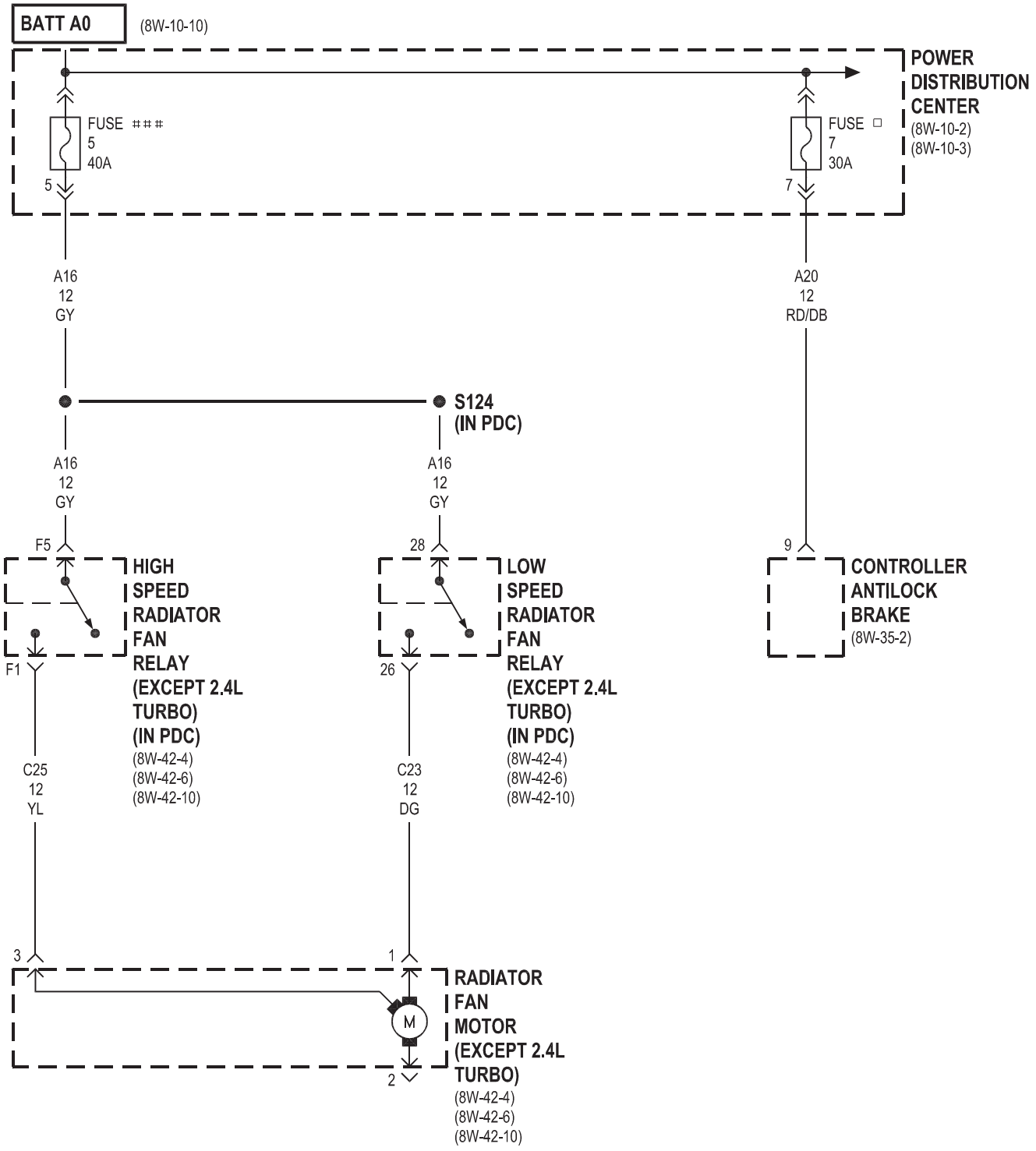

□ ABS
EXCEPT 2.4L TURBO

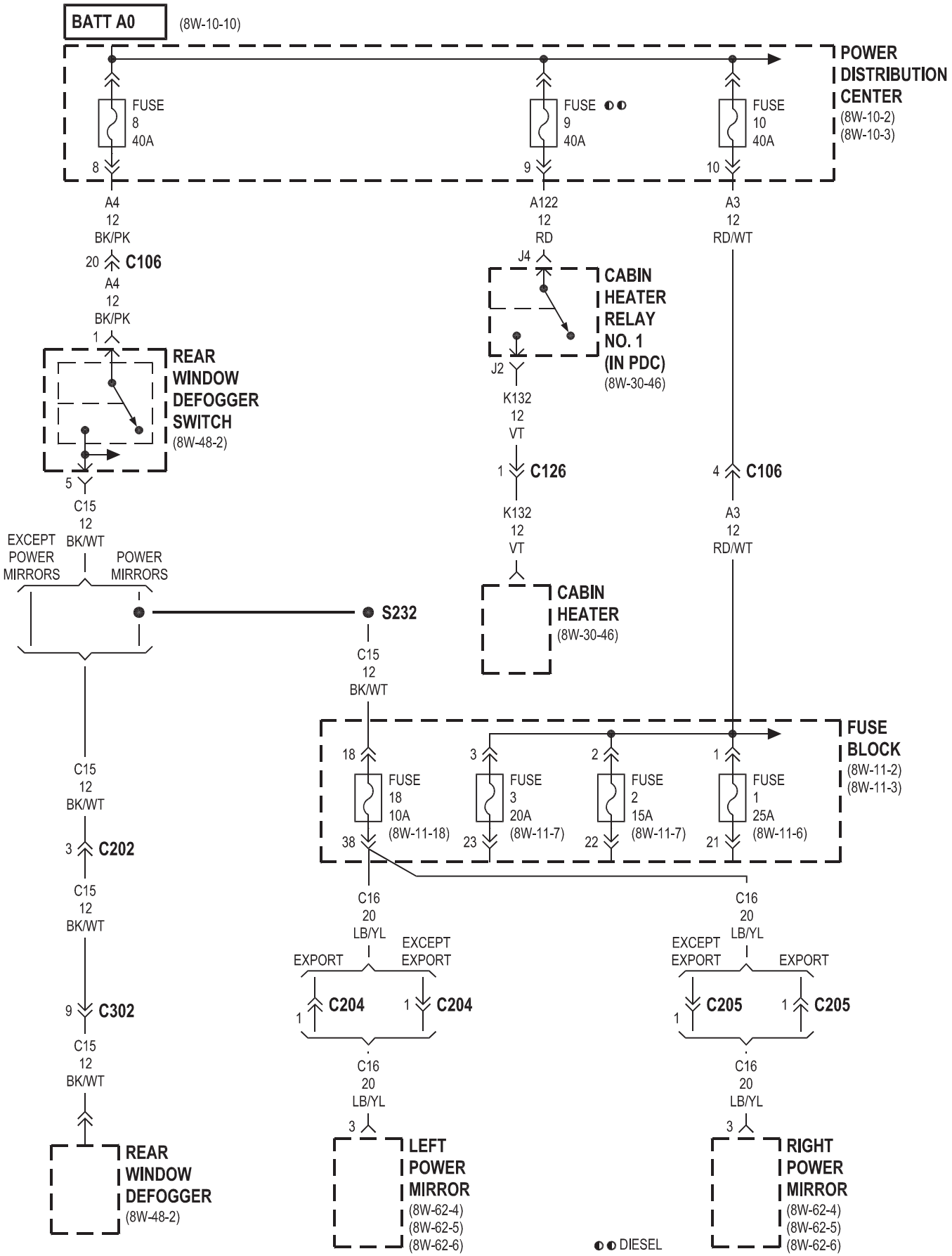
BATT A0
(8W-10-10)
POWER DISTRIBUTION CENTER
(8W-10-2)
(8W-10-3)
FUSE 8 40A
FUSE 9 40A
FUSE 10 40A
8
9
10
A4 12 BK/PK
A122 12 RD
A3 12 RD/WT
20 C106
A4 12 BK/PK
J4
CABIN HEATER RELAY NO. 1 (IN PDC)
(8W-30-46)
J2
K132 12 VT
1 C126
K132 12 VT
CABIN HEATER
(8W-30-46)
4 C106
A3 12 RD/WT
REAR WINDOW DEFOGGER SWITCH
(8W-48-2)
5
C15 12 BK/WT
EXCEPT POWER MIRRORS
POWER MIRRORS
S232
C15 12 BK/WT
FUSE BLOCK
(8W-11-2)
(8W-11-3)
FUSE 18 10A (8W-11-18)
FUSE 3 20A (8W-11-7)
FUSE 2 15A (8W-11-7)
FUSE 1 25A (8W-11-6)
C15 12 BK/WT
3 C202
C15 12 BK/WT
9 C302
C15 12 BK/WT
REAR WINDOW DEFOGGER
(8W-48-2)
C16 20 LB/YL
EXPORT
EXCEPT EXPORT
C204
C204
C16 20 LB/YL
LEFT POWER MIRROR
(8W-62-4)
(8W-62-5)
(8W-62-6)
C16 20 LB/YL
EXCEPT EXPORT
EXPORT
C205
C205
C16 20 LB/YL
RIGHT POWER MIRROR
(8W-62-4)
(8W-62-5)
(8W-62-6)
DIESEL

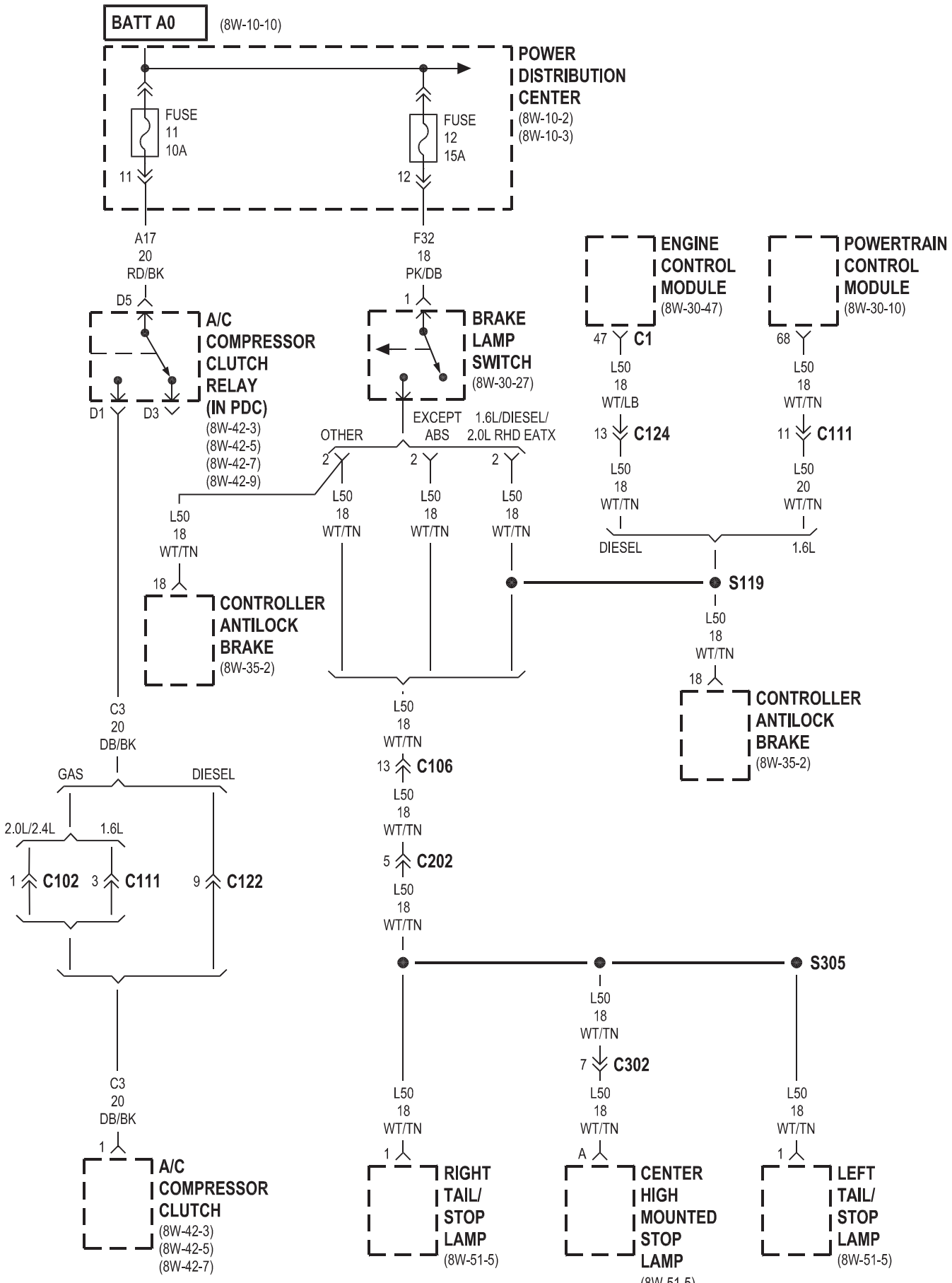
BATT A0
(8W-10-10)
POWER DISTRIBUTION CENTER
(8W-10-2)
(8W-10-3)
FUSE 11 10A
FUSE 12 15A
11
12
A17 20 RD/BK
F32 18 PK/DB
D5
1
A/C COMPRESSOR CLUTCH RELAY (IN PDC)
(8W-42-3)
(8W-42-5)
(8W-42-7)
(8W-42-9)
D1
D3
BRAKE LAMP SWITCH
(8W-30-27)
ENGINE CONTROL MODULE
(8W-30-47)
POWERTRAIN CONTROL MODULE
(8W-30-10)
47 C1
68
L50 18 WT/LB
L50 18 WT/TN
13 C124
11 C111
L50 18 WT/TN
L50 20 WT/TN
DIESEL
1.6L
OTHER
EXCEPT ABS
1.6L/DIESEL/ 2.0L RHD EATX
2
L50 18 WT/TN
S119
CONTROLLER ANTILOCK BRAKE
(8W-35-2)
18
C3 20 DB/BK
GAS
DIESEL
2.0L/2.4L
1.6L
1 C102
3 C111
9 C122
13 C106
5 C202
S305
7 C302
A
A/C COMPRESSOR CLUTCH
(8W-42-3)
(8W-42-5)
(8W-42-7)
RIGHT TAIL/ STOP LAMP
(8W-51-5)
CENTER HIGH MOUNTED STOP LAMP
(8W-51-5)
LEFT TAIL/ STOP LAMP
(8W-51-5)

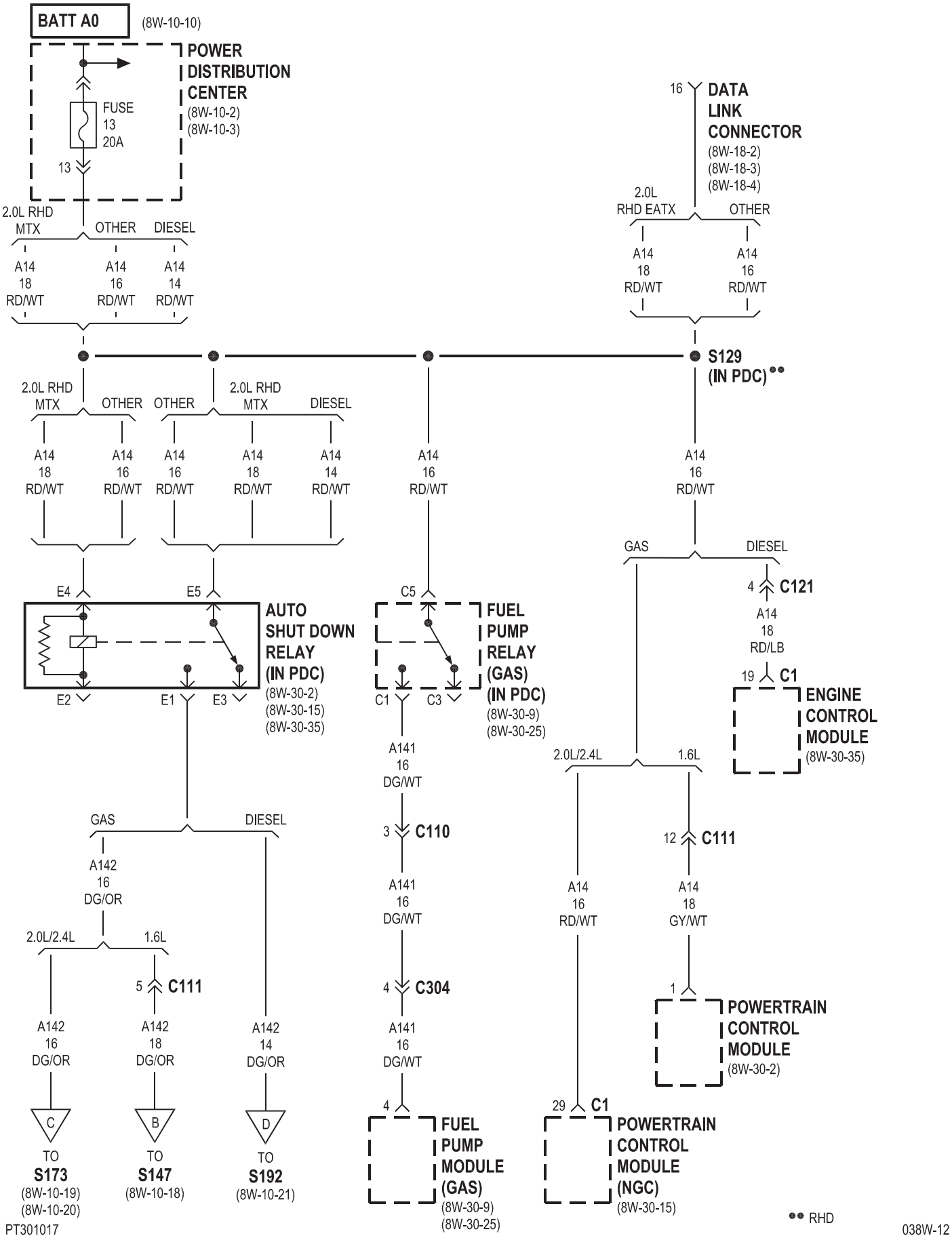
BATT A0
(8W-10-10)
POWER DISTRIBUTION CENTER
(8W-10-2)
(8W-10-3)
FUSE 13 20A
13
2.0L RHD MTX
OTHER
DIESEL
A14 18 RD/WT
A14 16 RD/WT
A14 14 RD/WT
16
DATA LINK CONNECTOR
(8W-18-2)
(8W-18-3)
(8W-18-4)
2.0L RHD EATX
OTHER
A14 18 RD/WT
A14 16 RD/WT
S129 (IN PDC)••
2.0L RHD MTX
OTHER
OTHER
2.0L RHD MTX
DIESEL
A14 18 RD/WT
A14 16 RD/WT
A14 16 RD/WT
A14 18 RD/WT
A14 14 RD/WT
A14 16 RD/WT
A14 16 RD/WT
GAS
DIESEL
4 C121
A14 18 RD/LB
19 C1
ENGINE CONTROL MODULE
(8W-30-35)
E4
E5
AUTO SHUT DOWN RELAY (IN PDC)
(8W-30-2)
(8W-30-15)
(8W-30-35)
E2
E1
E3
C5
FUEL PUMP RELAY (GAS) (IN PDC)
(8W-30-9)
(8W-30-25)
C1
C3
A141 16 DG/WT
3 C110
A141 16 DG/WT
4 C304
A141 16 DG/WT
4
FUEL PUMP MODULE (GAS)
(8W-30-9)
(8W-30-25)
2.0L/2.4L
1.6L
12 C111
A14 16 RD/WT
A14 18 GY/WT
1
POWERTRAIN CONTROL MODULE
(8W-30-2)
29 C1
POWERTRAIN CONTROL MODULE (NGC)
(8W-30-15)
GAS
DIESEL
A142 16 DG/OR
2.0L/2.4L
1.6L
5 C111
A142 16 DG/OR
A142 18 DG/OR
A142 14 DG/OR
C
B
D
TO S173
(8W-10-19)
(8W-10-20)
TO S147
(8W-10-18)
TO S192
(8W-10-21)
•• RHD
PT301017
038W-12

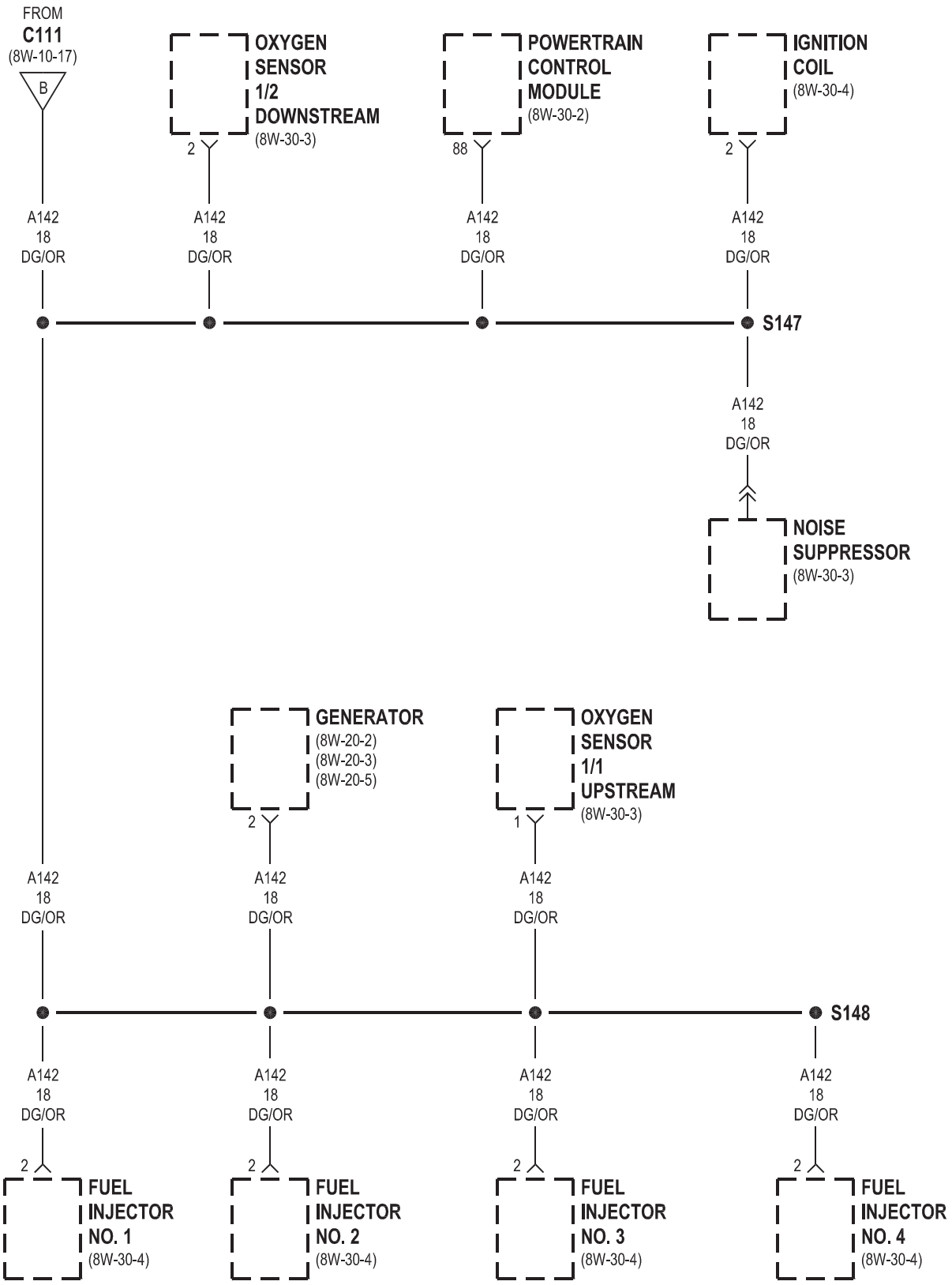
FROM
C111
(8W-10-17)
B
OXYGEN SENSOR 1/2 DOWNSTREAM
(8W-30-3)
2
POWERTRAIN CONTROL MODULE
(8W-30-2)
88
IGNITION COIL
(8W-30-4)
2
A142
18
DG/OR
S147
NOISE SUPPRESSOR
(8W-30-3)
GENERATOR
(8W-20-2)
(8W-20-3)
(8W-20-5)
OXYGEN SENSOR 1/1 UPSTREAM
(8W-30-3)
1
S148
FUEL INJECTOR NO. 1
(8W-30-4)
FUEL INJECTOR NO. 2
(8W-30-4)
FUEL INJECTOR NO. 3
(8W-30-4)
FUEL INJECTOR NO. 4
(8W-30-4)

2.0L/2.4L EXCEPT TURBO

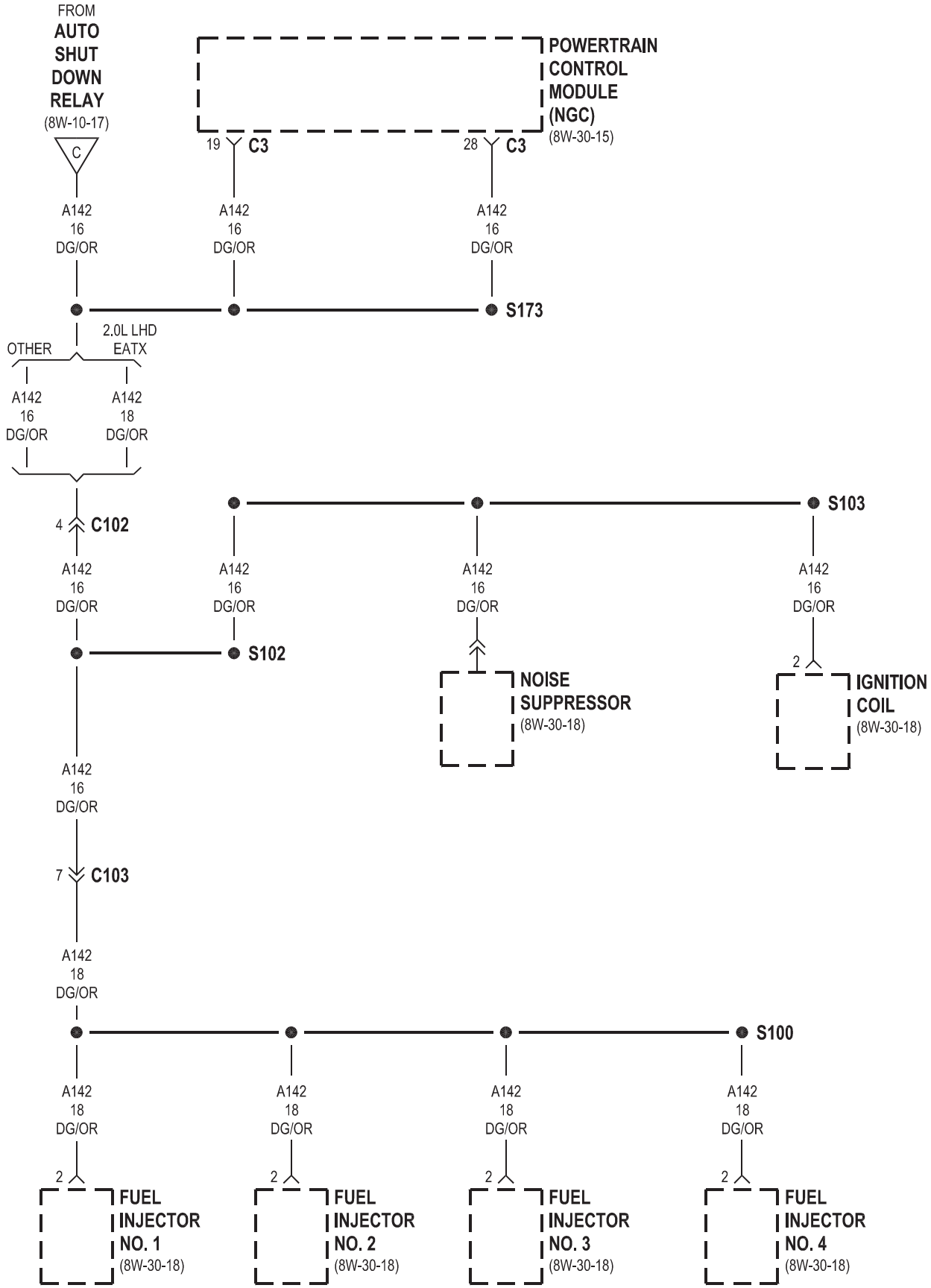

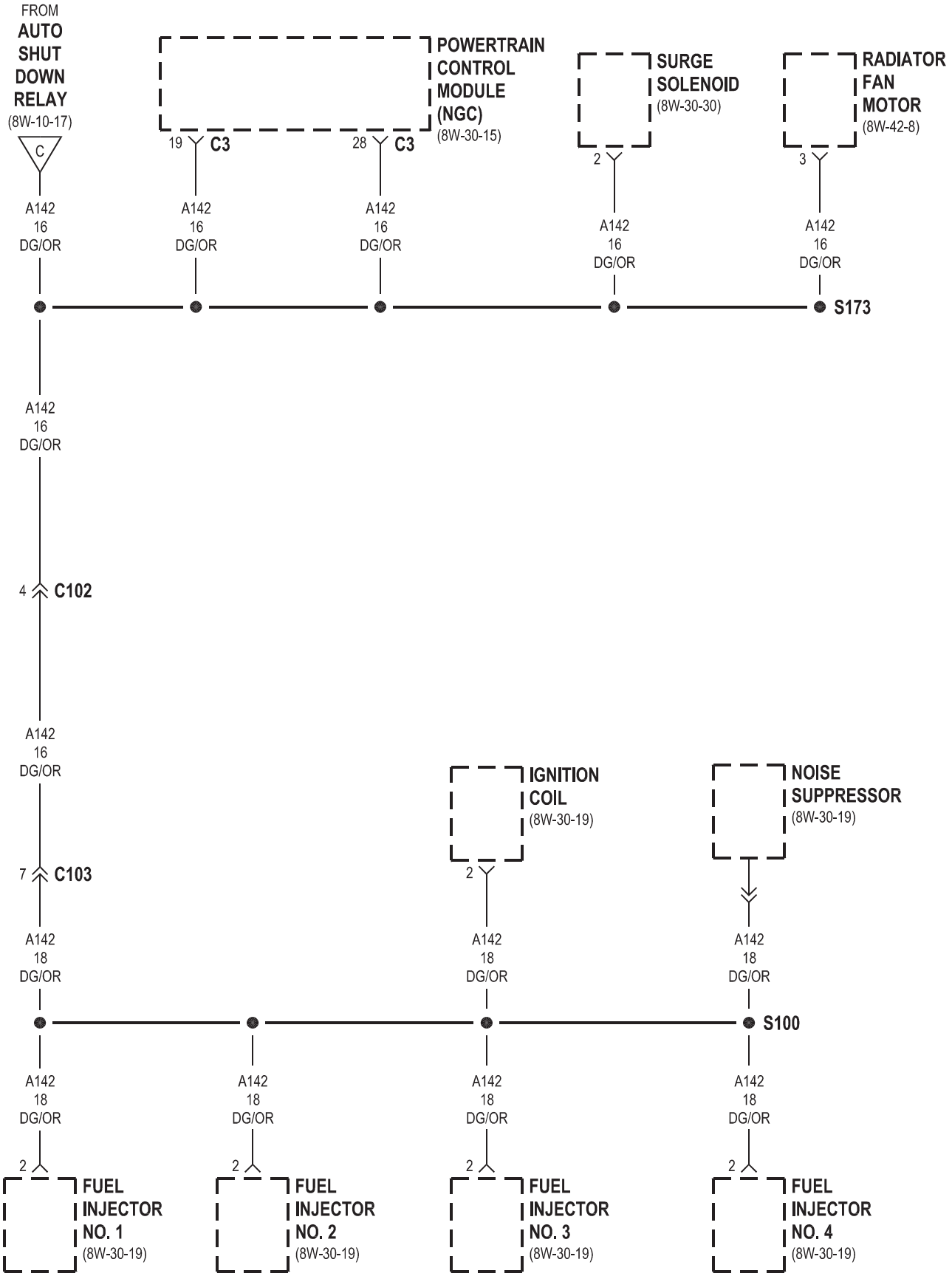
FROM
AUTO SHUT DOWN RELAY
(8W-10-17)
C
POWERTRAIN CONTROL MODULE (NGC)
(8W-30-15)
19 C3
28 C3
SURGE SOLENOID
(8W-30-30)
2
RADIATOR FAN MOTOR
(8W-42-8)
3
A142 16 DG/OR
S173
4 C102
7 C103
A142 18 DG/OR
IGNITION COIL
(8W-30-19)
NOISE SUPPRESSOR
(8W-30-19)
S100
FUEL INJECTOR NO. 1
(8W-30-19)
FUEL INJECTOR NO. 2
(8W-30-19)
FUEL INJECTOR NO. 3
(8W-30-19)
FUEL INJECTOR NO. 4
(8W-30-19)

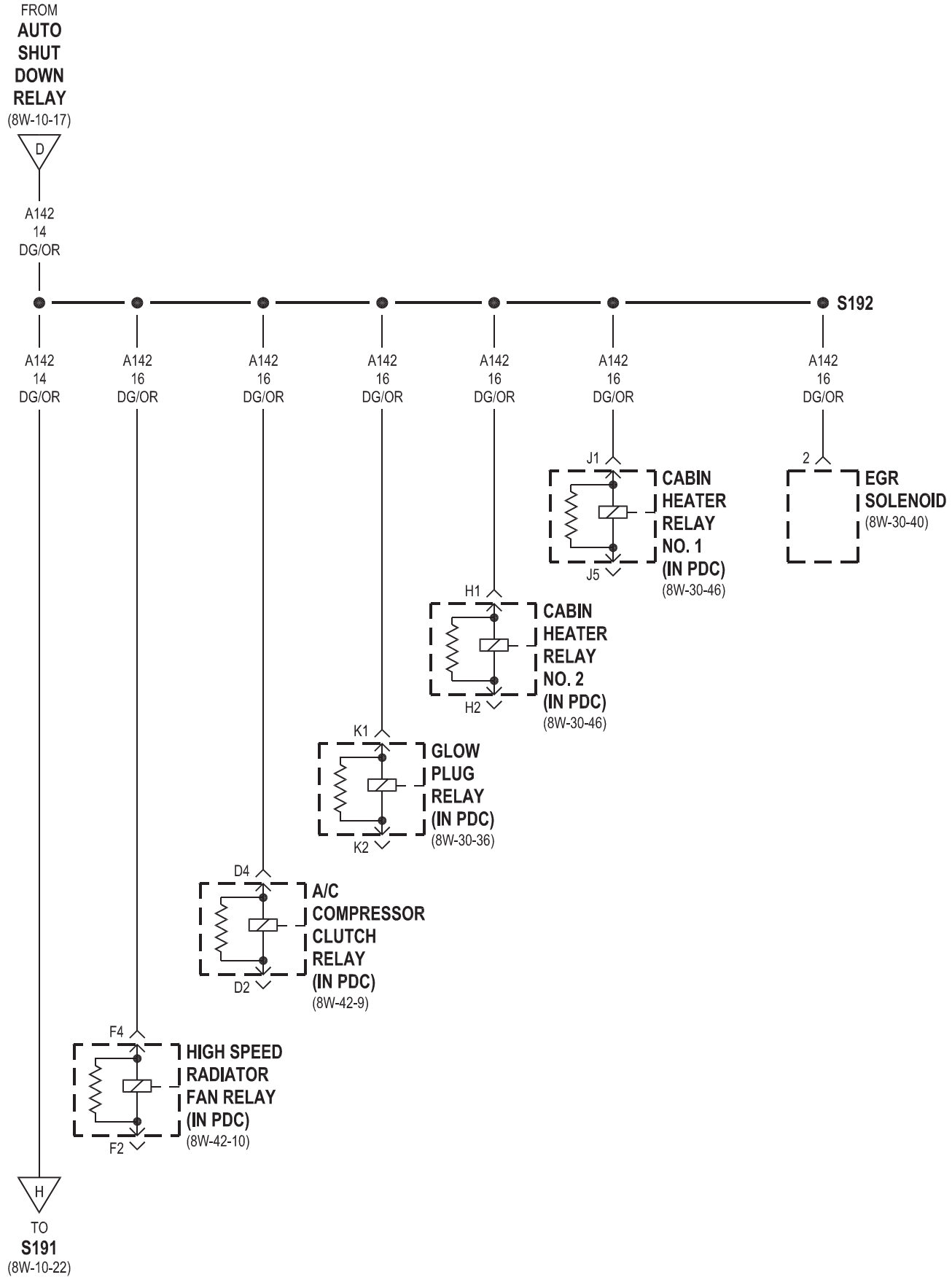
FROM
AUTO SHUT DOWN RELAY
(8W-10-17)
D
A142
14
DG/OR
S192
A142
14
DG/OR
A142
16
DG/OR
A142
16
DG/OR
A142
16
DG/OR
A142
16
DG/OR
A142
16
DG/OR
A142
16
DG/OR
J1
J5
CABIN HEATER RELAY NO. 1 (IN PDC)
(8W-30-46)
2
EGR SOLENOID
(8W-30-40)
H1
H2
CABIN HEATER RELAY NO. 2 (IN PDC)
(8W-30-46)
K1
K2
GLOW PLUG RELAY (IN PDC)
(8W-30-36)
D4
D2
A/C COMPRESSOR CLUTCH RELAY (IN PDC)
(8W-42-9)
F4
F2
HIGH SPEED RADIATOR FAN RELAY (IN PDC)
(8W-42-10)
H
TO
S191
(8W-10-22)

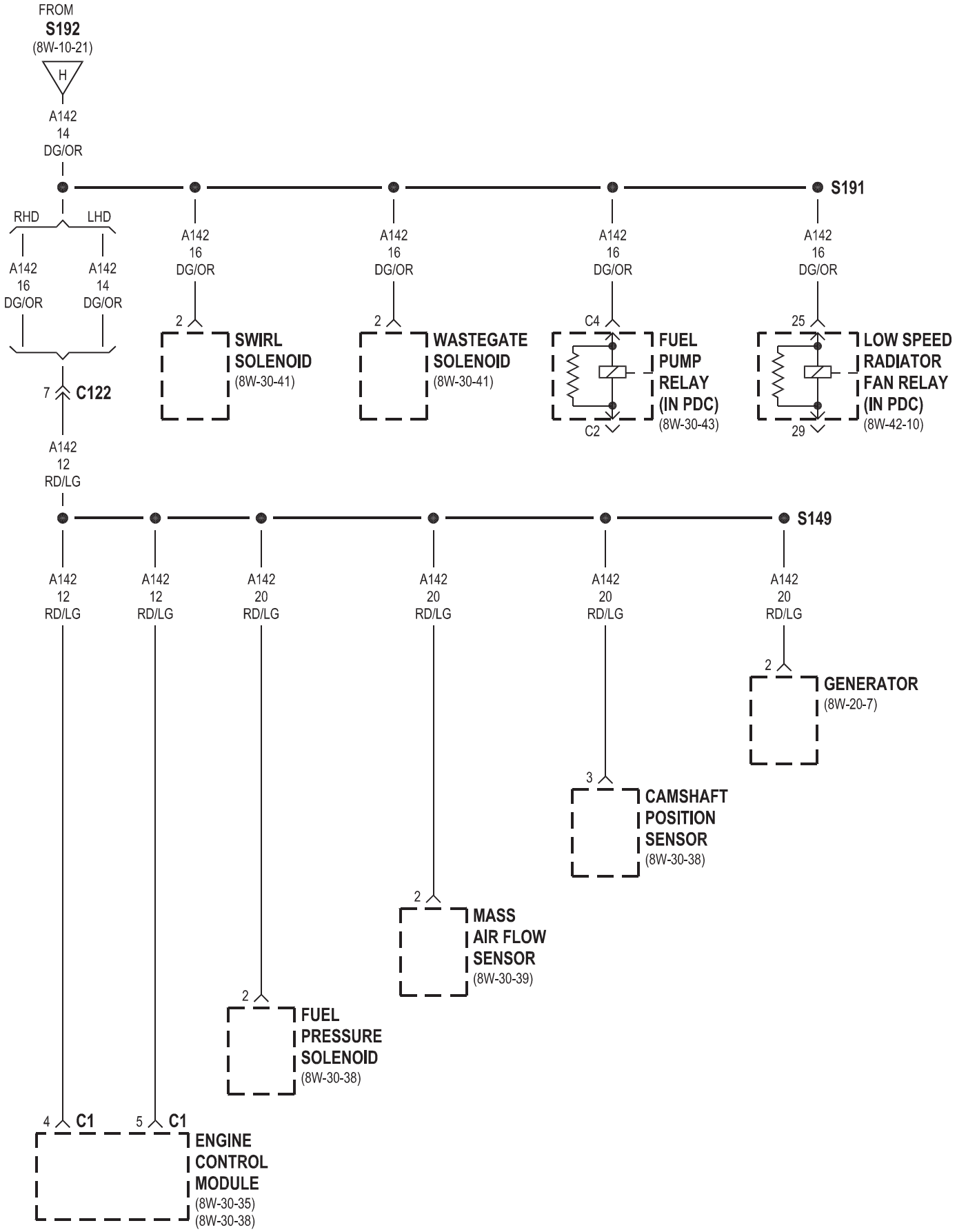
FROM
S192
(8W-10-21)
H
A142
14
DG/OR
S191
RHD
LHD
A142
16
DG/OR
A142
14
DG/OR
A142
16
DG/OR
2
SWIRL
SOLENOID
(8W-30-41)
A142
16
DG/OR
2
WASTEGATE
SOLENOID
(8W-30-41)
A142
16
DG/OR
C4
FUEL
PUMP
RELAY
(IN PDC)
(8W-30-43)
C2
A142
16
DG/OR
25
LOW SPEED
RADIATOR
FAN RELAY
(IN PDC)
(8W-42-10)
29
7
C122
A142
12
RD/LG
S149
A142
12
RD/LG
A142
12
RD/LG
A142
20
RD/LG
A142
20
RD/LG
A142
20
RD/LG
A142
20
RD/LG
2
GENERATOR
(8W-20-7)
3
CAMSHAFT
POSITION
SENSOR
(8W-30-38)
2
MASS
AIR FLOW
SENSOR
(8W-30-39)
2
FUEL
PRESSURE
SOLENOID
(8W-30-38)
4
C1
5
C1
ENGINE
CONTROL
MODULE
(8W-30-35)
(8W-30-38)

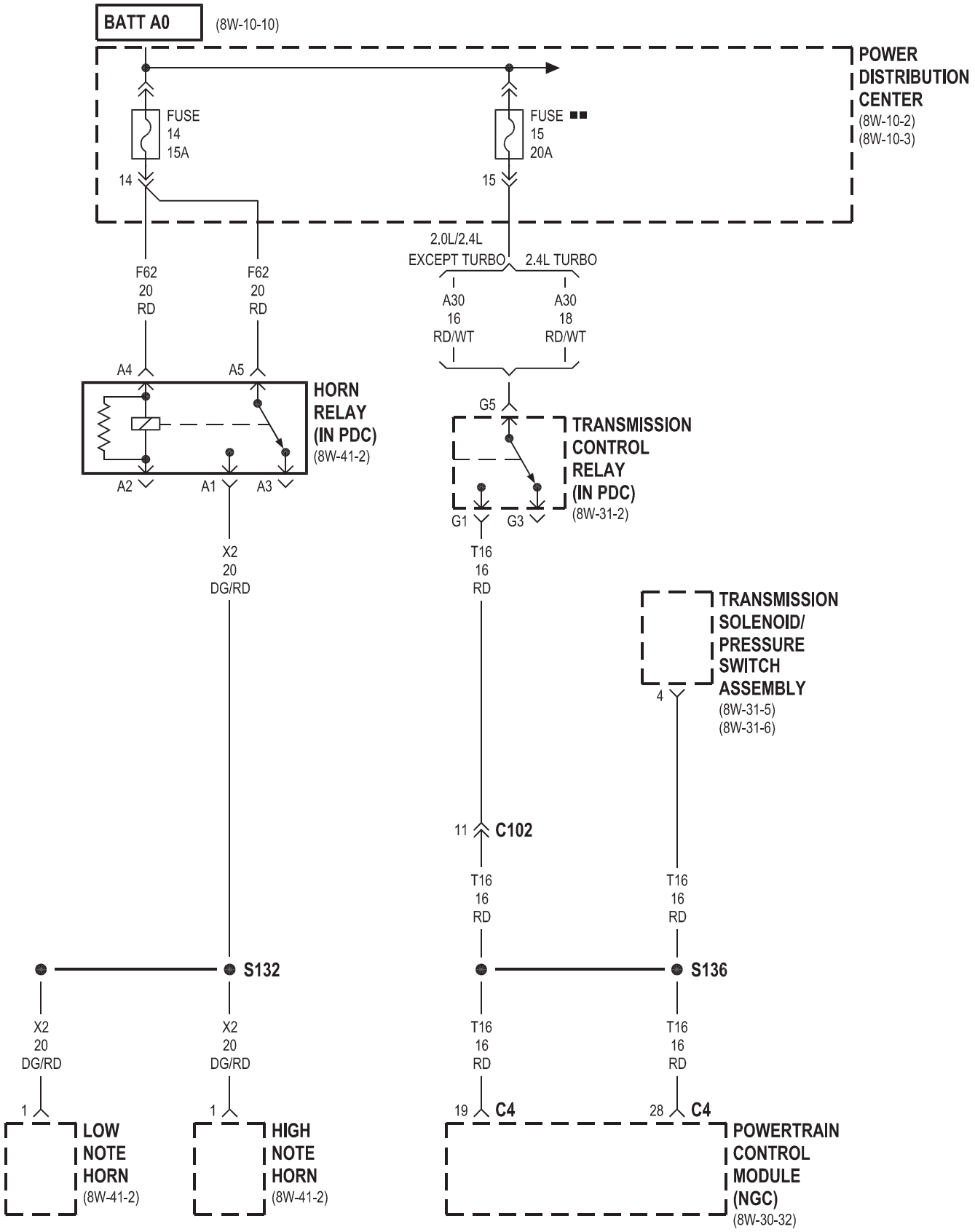
BATT A0
(8W-10-10)
POWER DISTRIBUTION CENTER
(8W-10-2)
(8W-10-3)
FUSE 14 15A
FUSE 15 20A ■■
14
15
F62 20 RD
F62 20 RD
2.0L/2.4L EXCEPT TURBO
2.4L TURBO
A30 16 RD/WT
A30 18 RD/WT
A4
A5
HORN RELAY (IN PDC)
(8W-41-2)
A2
A1
A3
G5
TRANSMISSION CONTROL RELAY (IN PDC)
(8W-31-2)
G1
G3
X2 20 DG/RD
T16 16 RD
TRANSMISSION SOLENOID/ PRESSURE SWITCH ASSEMBLY
(8W-31-5)
(8W-31-6)
4
11
C102
T16 16 RD
T16 16 RD
S132
S136
X2 20 DG/RD
X2 20 DG/RD
T16 16 RD
T16 16 RD
1
1
19
C4
28
C4
LOW NOTE HORN
(8W-41-2)
HIGH NOTE HORN
(8W-41-2)
POWERTRAIN CONTROL MODULE (NGC)
(8W-30-32)

■■ EATX

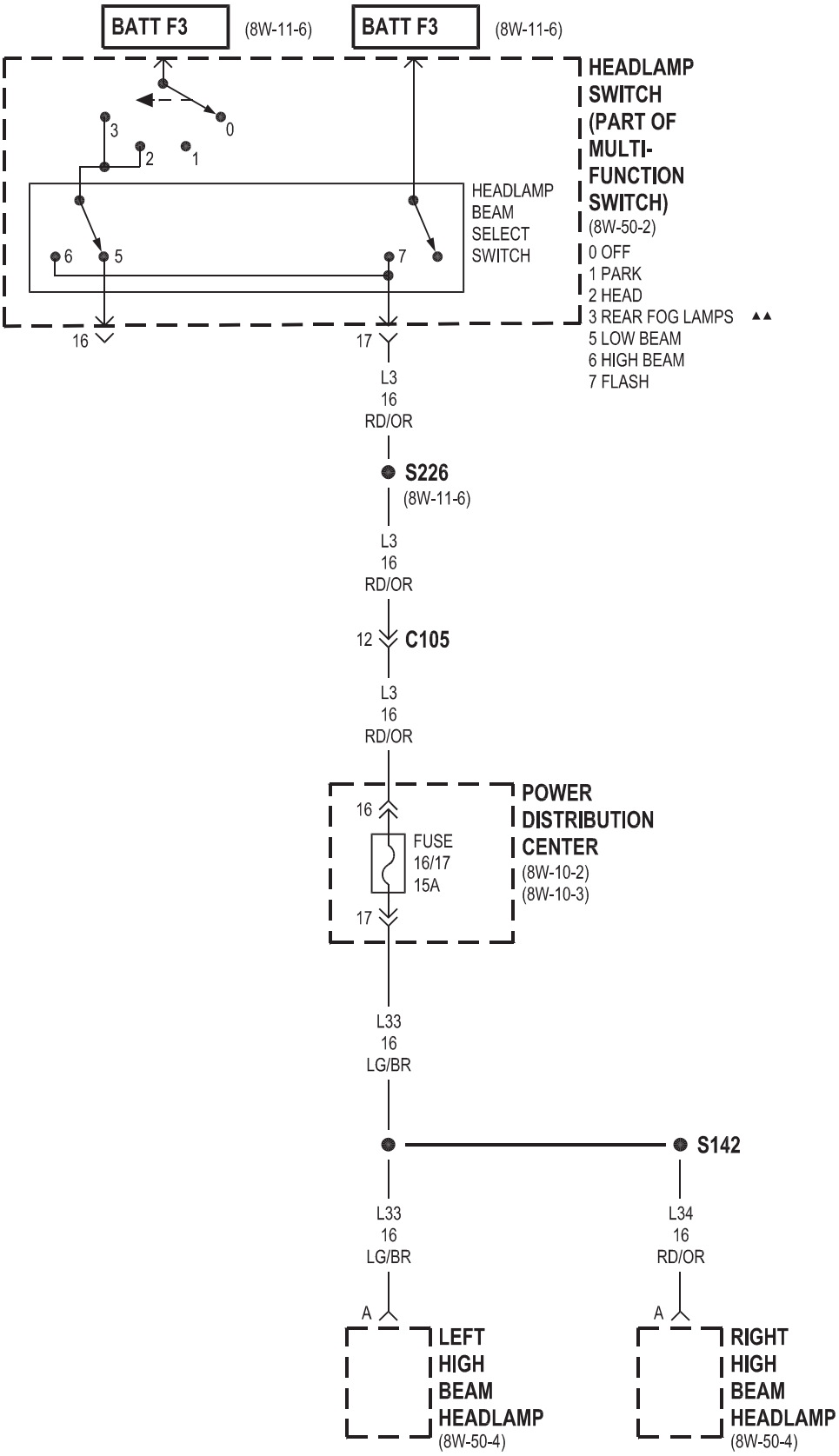
BATT F3
(8W-11-6)
BATT F3
(8W-11-6)
HEADLAMP SWITCH (PART OF MULTI-FUNCTION SWITCH)
(8W-50-2)
0 OFF
1 PARK
2 HEAD
3 REAR FOG LAMPS ▲▲
5 LOW BEAM
6 HIGH BEAM
7 FLASH
HEADLAMP BEAM SELECT SWITCH
3
2
1
0
6
5
7
16
17
L3
16
RD/OR
S226
(8W-11-6)
L3
16
RD/OR
12
C105
L3
16
RD/OR
16
FUSE
16/17
15A
17
POWER DISTRIBUTION CENTER
(8W-10-2)
(8W-10-3)
L33
16
LG/BR
S142
L33
16
LG/BR
L34
16
RD/OR
A
A
LEFT HIGH BEAM HEADLAMP
(8W-50-4)
RIGHT HIGH BEAM HEADLAMP
(8W-50-4)

▲▲ EXPORT

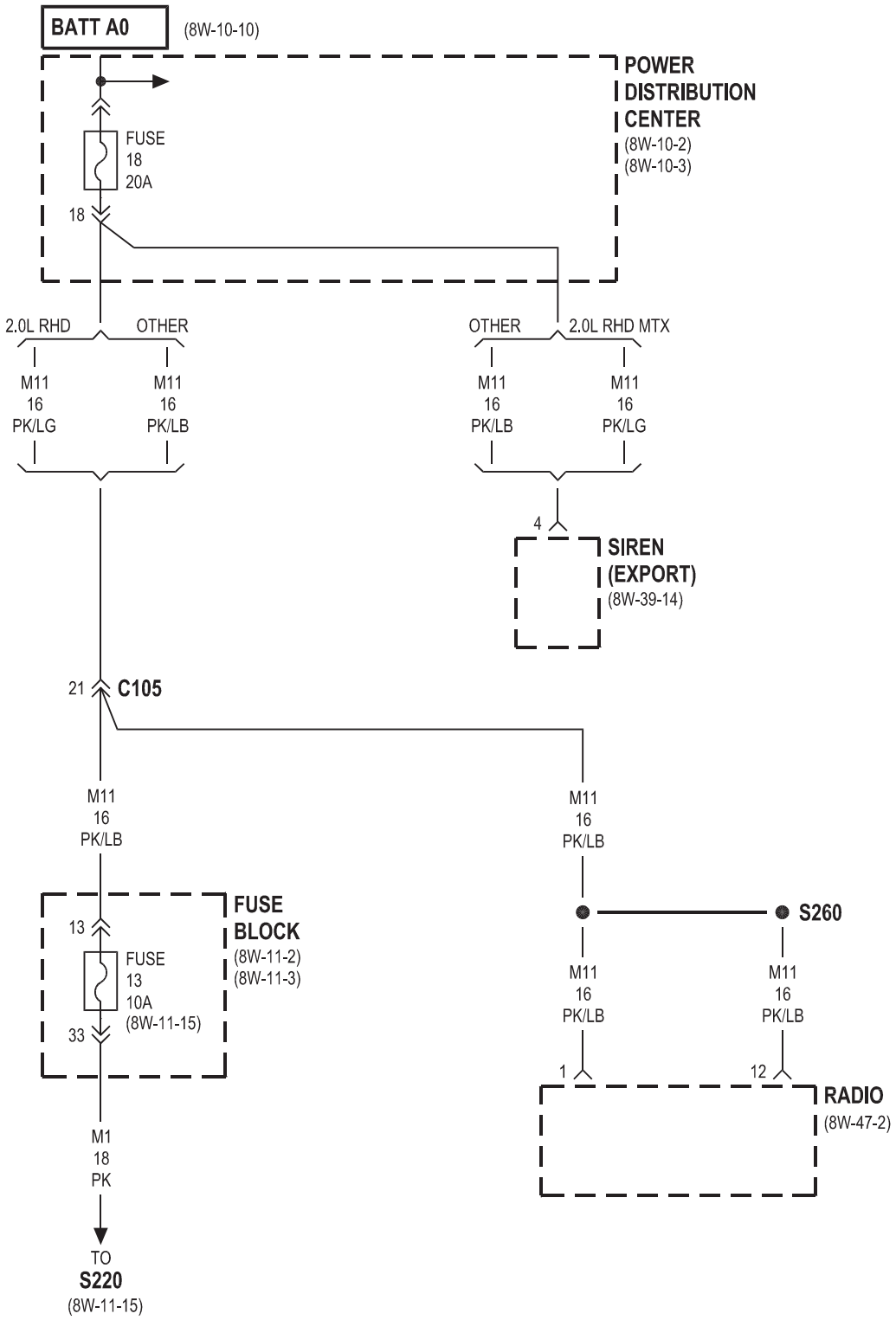
BATT A0
(8W-10-10)
POWER DISTRIBUTION CENTER
(8W-10-2)
(8W-10-3)
FUSE 18 20A
18
2.0L RHD
OTHER
OTHER
2.0L RHD MTX
M11 16 PK/LG
M11 16 PK/LB
M11 16 PK/LB
M11 16 PK/LG
4
SIREN (EXPORT)
(8W-39-14)
21
C105
M11 16 PK/LB
M11 16 PK/LB
FUSE BLOCK
(8W-11-2)
(8W-11-3)
13
FUSE 13 10A
(8W-11-15)
33
S260
M11 16 PK/LB
M11 16 PK/LB
1
12
RADIO
(8W-47-2)
M1 18 PK
TO
S220
(8W-11-15)

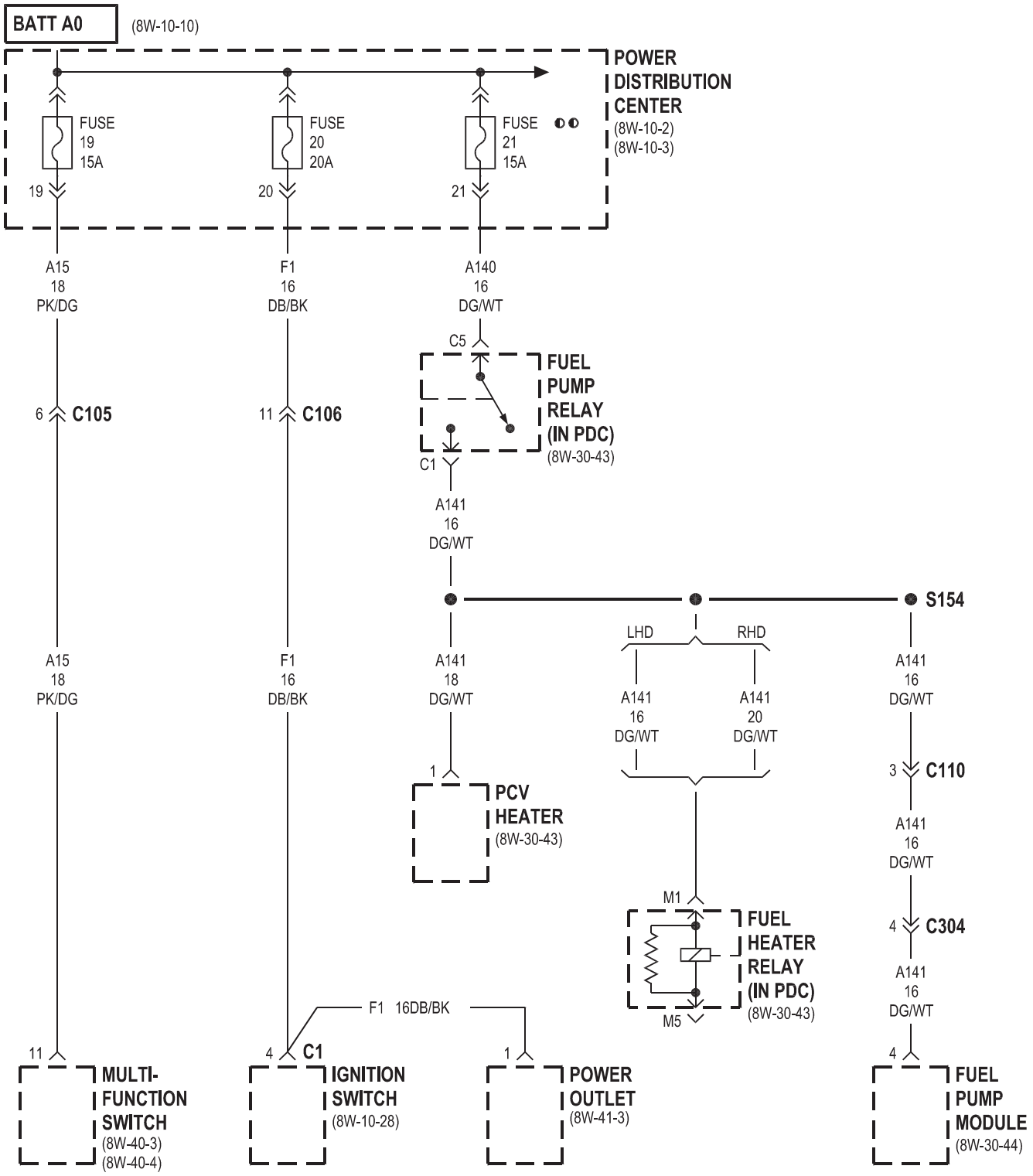
BATT A0
(8W-10-10)
POWER DISTRIBUTION CENTER
(8W-10-2)
(8W-10-3)
FUSE 19 15A
FUSE 20 20A
FUSE 21 15A
19
20
21
A15 18 PK/DG
F1 16 DB/BK
A140 16 DG/WT
C5
FUEL PUMP RELAY (IN PDC)
(8W-30-43)
6 C105
11 C106
C1
A141 16 DG/WT
S154
LHD
RHD
A15 18 PK/DG
F1 16 DB/BK
A141 18 DG/WT
A141 16 DG/WT
A141 20 DG/WT
A141 16 DG/WT
1
PCV HEATER
(8W-30-43)
3 C110
A141 16 DG/WT
M1
FUEL HEATER RELAY (IN PDC)
(8W-30-43)
M5
4 C304
A141 16 DG/WT
F1 16DB/BK
11
MULTI-FUNCTION SWITCH
(8W-40-3)
(8W-40-4)
4 C1
IGNITION SWITCH
(8W-10-28)
1
POWER OUTLET
(8W-41-3)
4
FUEL PUMP MODULE
(8W-30-44)

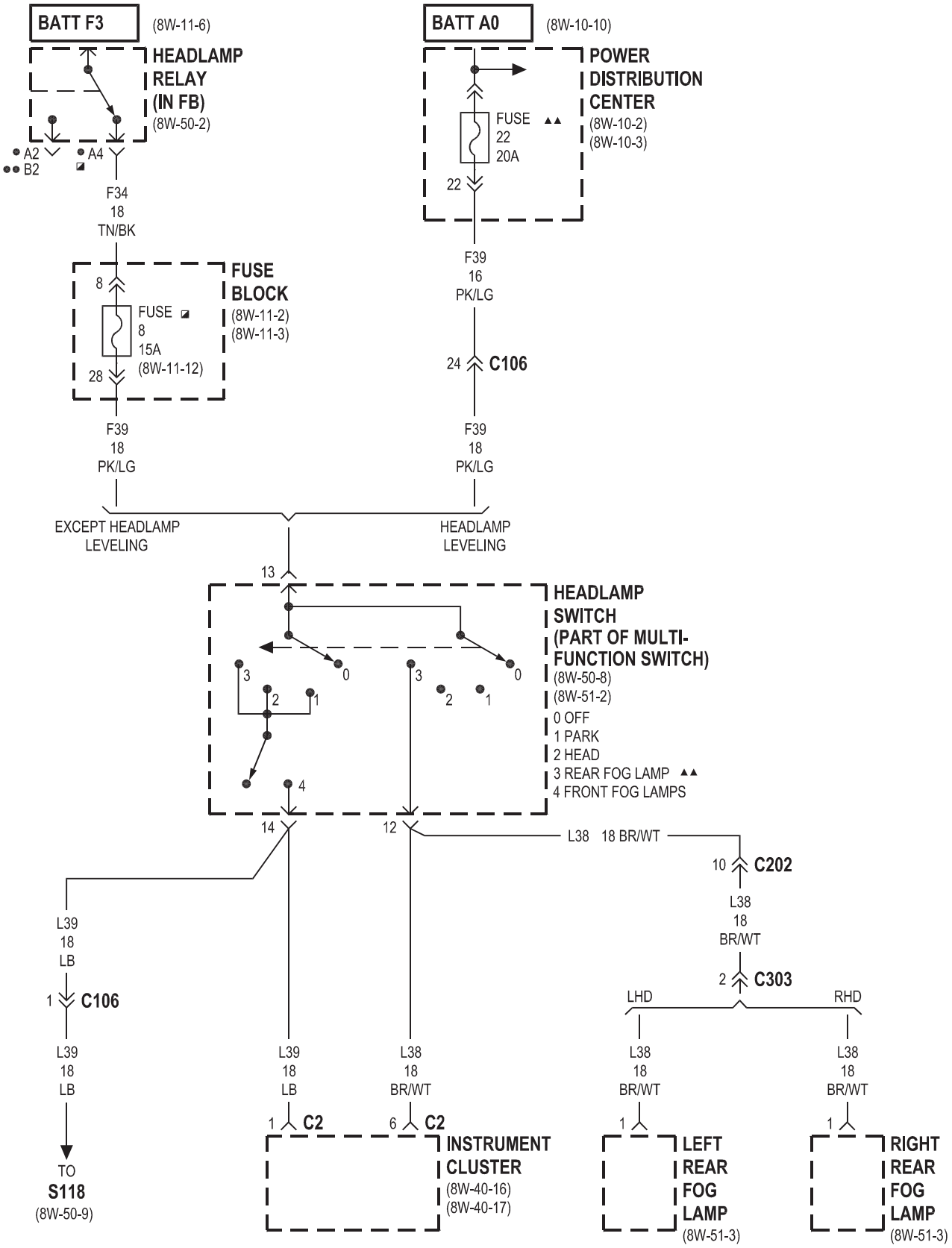

◪ EXCEPT HEADLAMP LEVELING
▲▲ EXPORT
● LHD
●● RHD

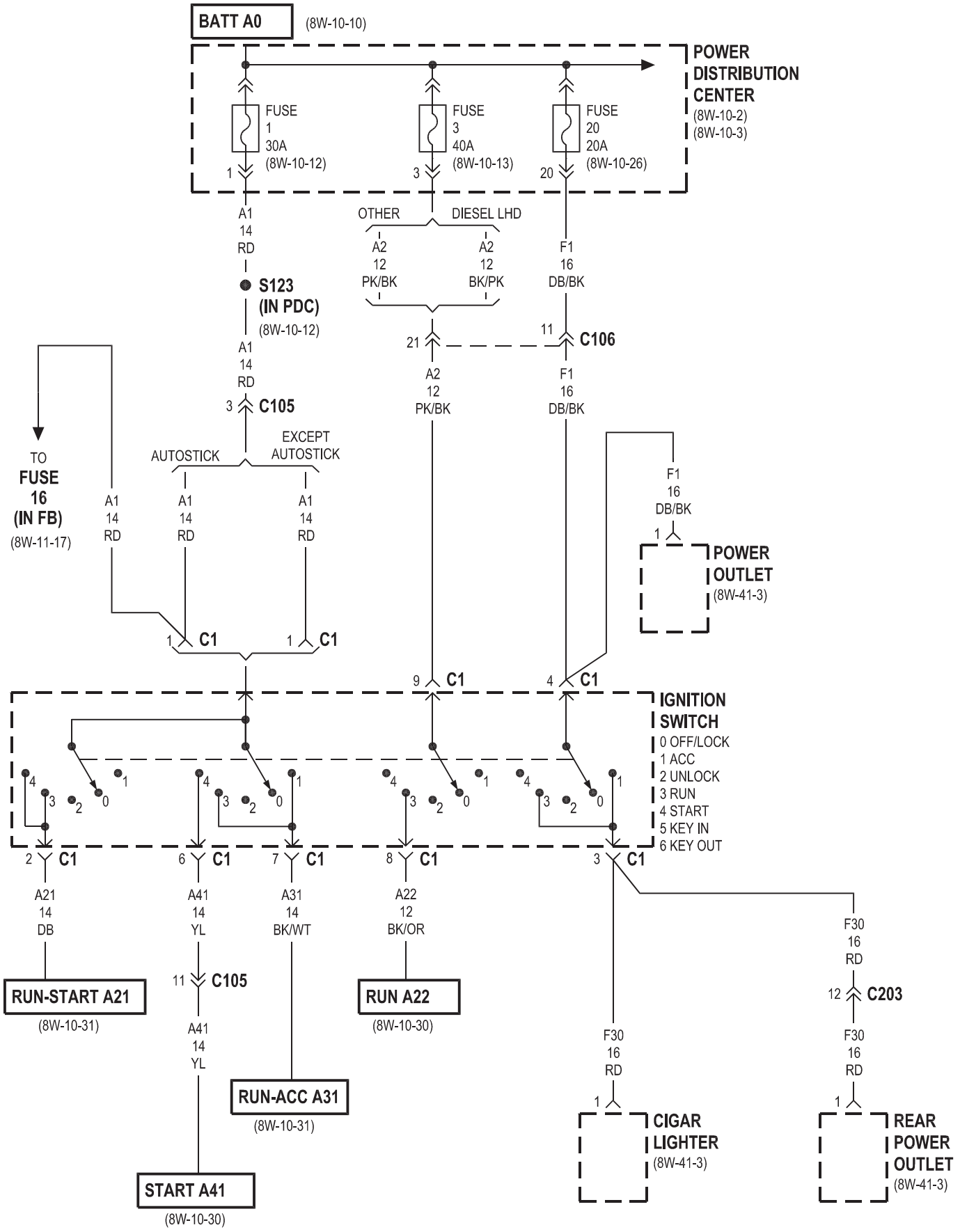
BATT A0
(8W-10-10)
POWER DISTRIBUTION CENTER
(8W-10-2)
(8W-10-3)
FUSE 1 30A (8W-10-12)
FUSE 3 40A (8W-10-13)
FUSE 20 20A (8W-10-26)
1
3
20
A1 14 RD
OTHER
DIESEL LHD
A2 12 PK/BK
A2 12 BK/PK
F1 16 DB/BK
S123 (IN PDC)
(8W-10-12)
21
11
C106
A1 14 RD
3
C105
A2 12 PK/BK
F1 16 DB/BK
TO FUSE 16 (IN FB)
(8W-11-17)
AUTOSTICK
EXCEPT AUTOSTICK
A1 14 RD
A1 14 RD
A1 14 RD
F1 16 DB/BK
1
POWER OUTLET
(8W-41-3)
1 C1
1 C1
9 C1
4 C1
IGNITION SWITCH
0 OFF/LOCK
1 ACC
2 UNLOCK
3 RUN
4 START
5 KEY IN
6 KEY OUT
2 C1
6 C1
7 C1
8 C1
3 C1
A21 14 DB
A41 14 YL
A31 14 BK/WT
A22 12 BK/OR
F30 16 RD
RUN-START A21
(8W-10-31)
11
C105
RUN A22
(8W-10-30)
12
C203
A41 14 YL
F30 16 RD
F30 16 RD
RUN-ACC A31
(8W-10-31)
1
CIGAR LIGHTER
(8W-41-3)
1
REAR POWER OUTLET
(8W-41-3)
START A41
(8W-10-30)

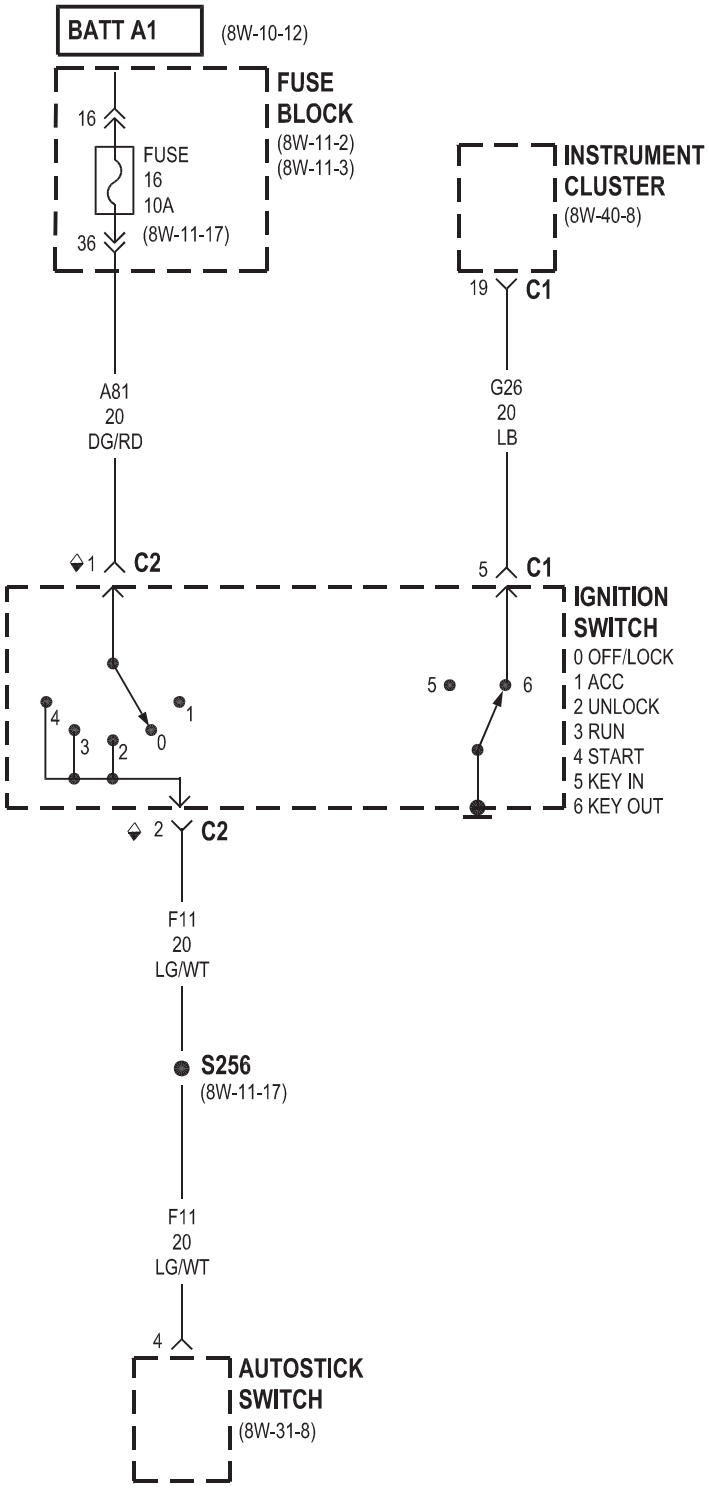
BATT A1
(8W-10-12)
FUSE BLOCK
(8W-11-2)
(8W-11-3)
16
FUSE
16
10A
(8W-11-17)
36
INSTRUMENT CLUSTER
(8W-40-8)
19
C1
A81
20
DG/RD
G26
20
LB
1
C2
5
C1
IGNITION SWITCH
0 OFF/LOCK
1 ACC
2 UNLOCK
3 RUN
4 START
5 KEY IN
6 KEY OUT
2
C2
F11
20
LG/WT
S256
(8W-11-17)
F11
20
LG/WT
4
AUTOSTICK SWITCH
(8W-31-8)

◆ AUTOSTICK

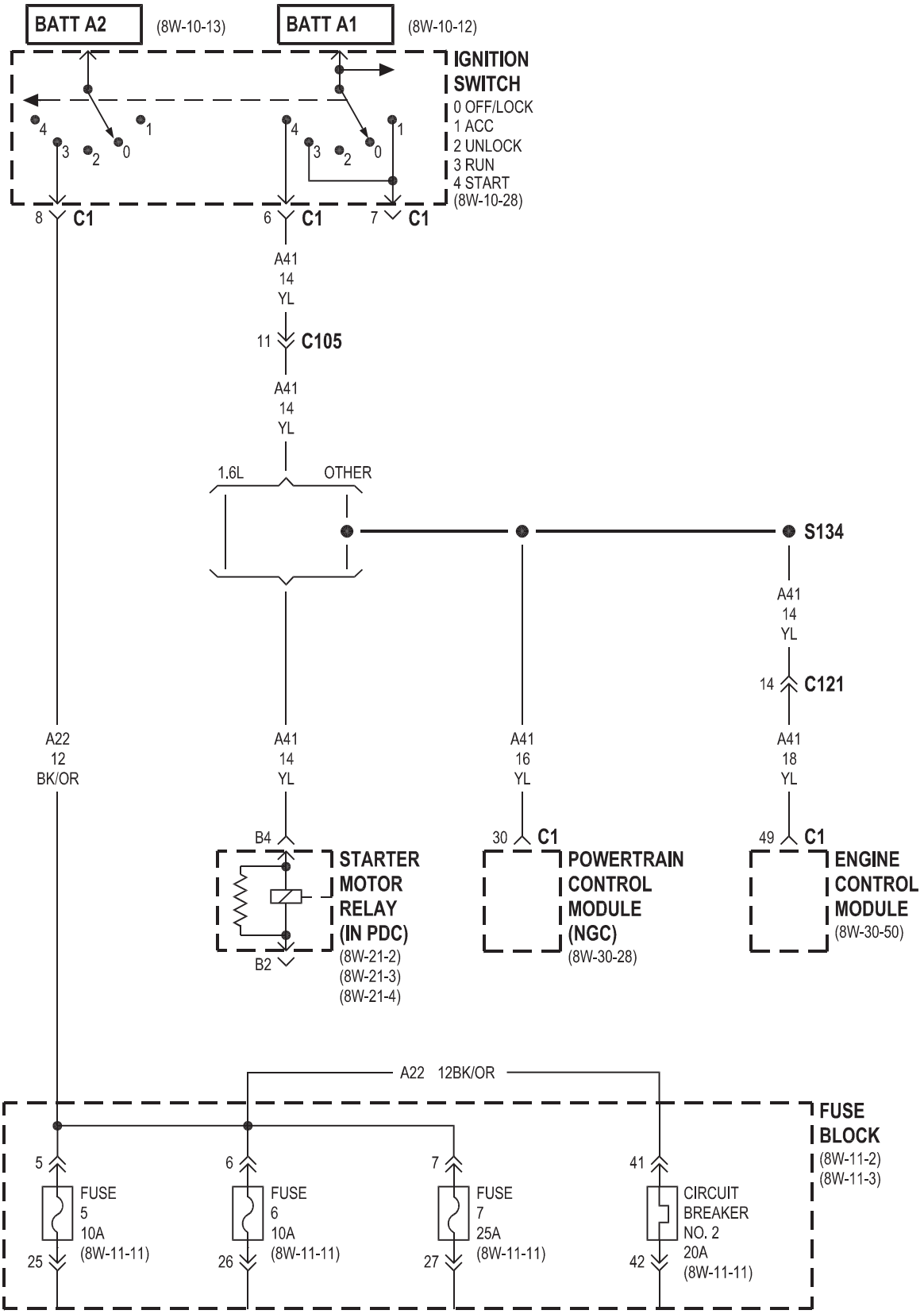
BATT A2
(8W-10-13)
BATT A1
(8W-10-12)
IGNITION SWITCH
0 OFF/LOCK
1 ACC
2 UNLOCK
3 RUN
4 START
(8W-10-28)
8 C1
6 C1
7 C1
A41
14
YL
11 C105
A41
14
YL
1.6L
OTHER
S134
A41
14
YL
14 C121
A22
12
BK/OR
A41
14
YL
A41
16
YL
A41
18
YL
B4
B2
STARTER MOTOR RELAY (IN PDC)
(8W-21-2)
(8W-21-3)
(8W-21-4)
30 C1
POWERTRAIN CONTROL MODULE (NGC)
(8W-30-28)
49 C1
ENGINE CONTROL MODULE
(8W-30-50)
A22 12BK/OR
FUSE BLOCK
(8W-11-2)
(8W-11-3)
5
FUSE 5 10A
(8W-11-11)
25
6
FUSE 6 10A
(8W-11-11)
26
7
FUSE 7 25A
(8W-11-11)
27
41
CIRCUIT BREAKER NO. 2 20A
(8W-11-11)
42

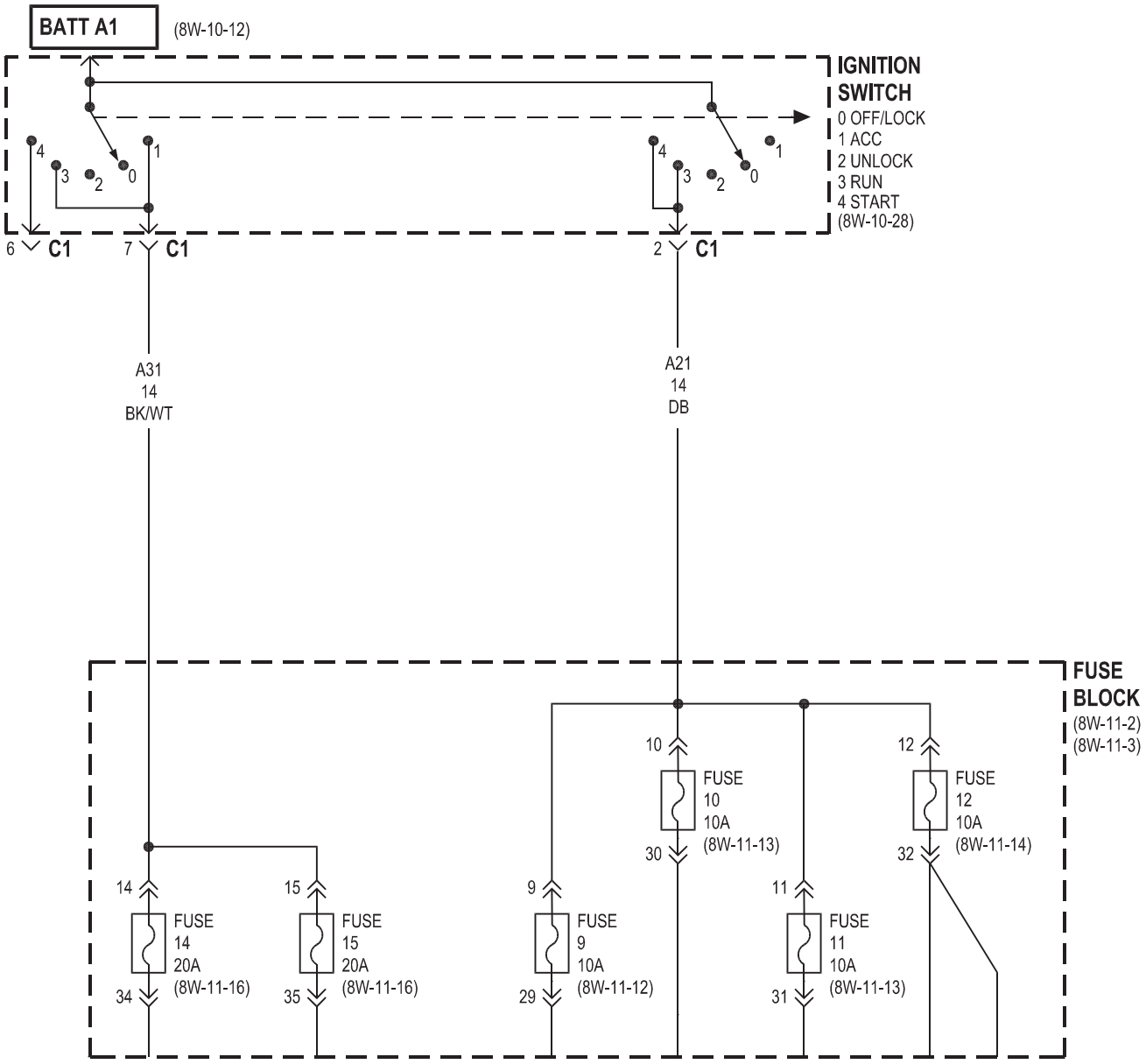
BATT A1
(8W-10-12)
IGNITION SWITCH
0 OFF/LOCK
1 ACC
2 UNLOCK
3 RUN
4 START
(8W-10-28)
6 C1
7 C1
2 C1
A31
14
BK/WT
A21
14
DB
FUSE BLOCK
(8W-11-2)
(8W-11-3)
10
FUSE
10
10A
(8W-11-13)
30
12
FUSE
12
10A
(8W-11-14)
32
14
FUSE
14
20A
(8W-11-16)
34
15
FUSE
15
20A
(8W-11-16)
35
9
FUSE
9
10A
(8W-11-12)
29
11
FUSE
11
10A
(8W-11-13)
31

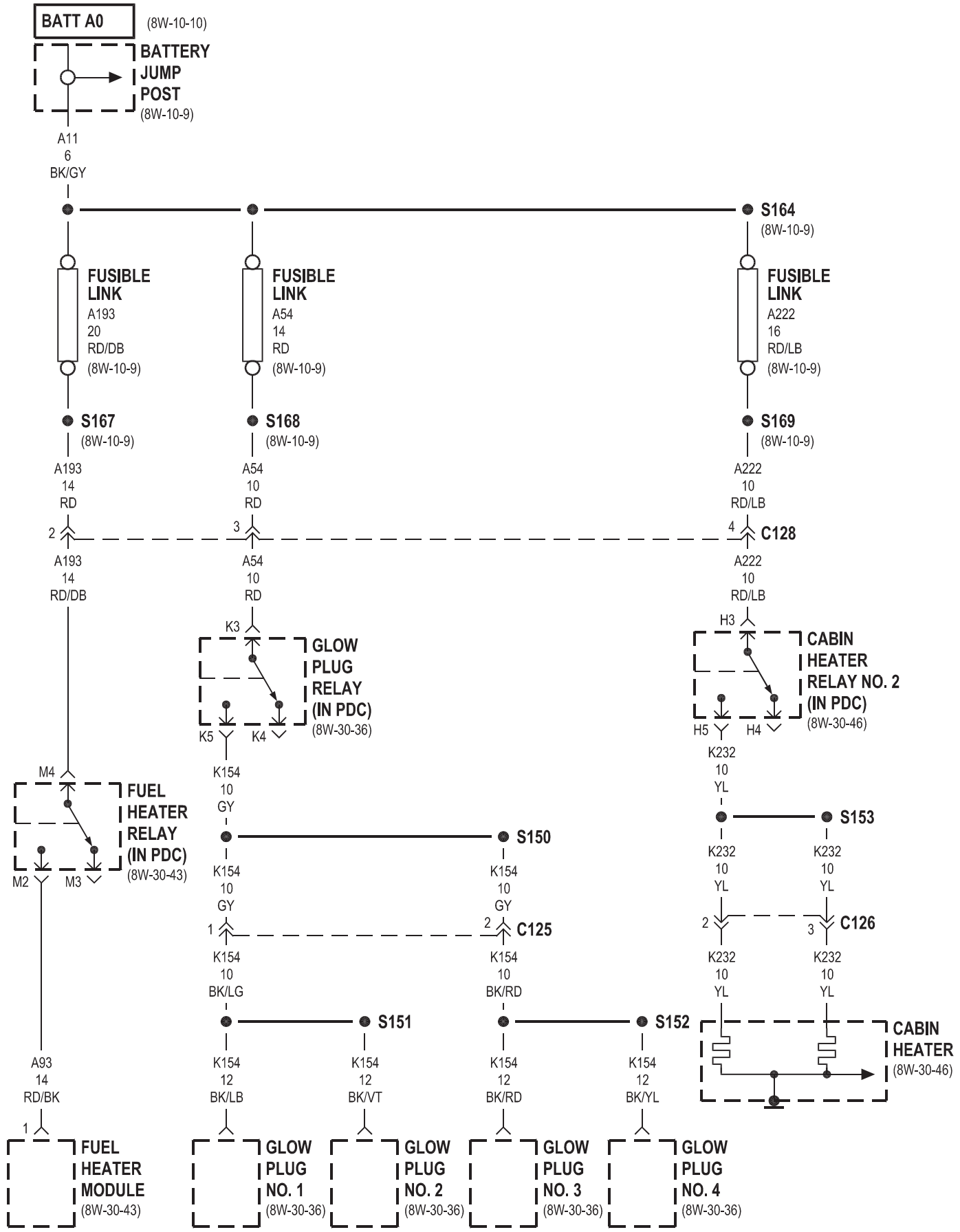
BATT A0
(8W-10-10)
BATTERY JUMP POST
(8W-10-9)
A11
6
BK/GY
S164
(8W-10-9)
FUSIBLE LINK
A193
20
RD/DB
(8W-10-9)
FUSIBLE LINK
A54
14
RD
(8W-10-9)
FUSIBLE LINK
A222
16
RD/LB
(8W-10-9)
S167
(8W-10-9)
S168
(8W-10-9)
S169
(8W-10-9)
A193
14
RD
A54
10
RD
A222
10
RD/LB
2
3
4
C128
A193
14
RD/DB
A54
10
RD
A222
10
RD/LB
K3
GLOW PLUG RELAY (IN PDC)
(8W-30-36)
K5
K4
H3
CABIN HEATER RELAY NO. 2 (IN PDC)
(8W-30-46)
H5
H4
K232
10
YL
M4
FUEL HEATER RELAY (IN PDC)
(8W-30-43)
M2
M3
K154
10
GY
S150
S153
K154
10
GY
K154
10
GY
K232
10
YL
K232
10
YL
1
2
C125
2
3
C126
K154
10
BK/LG
K154
10
BK/RD
K232
10
YL
K232
10
YL
S151
S152
CABIN HEATER
(8W-30-46)
A93
14
RD/BK
K154
12
BK/LB
K154
12
BK/VT
K154
12
BK/RD
K154
12
BK/YL
1
FUEL HEATER MODULE
(8W-30-43)
GLOW PLUG NO. 1
(8W-30-36)
GLOW PLUG NO. 2
(8W-30-36)
GLOW PLUG NO. 3
(8W-30-36)
GLOW PLUG NO. 4
(8W-30-36)

8W-11 FUSE BLOCK

Component	Page
A/C Compressor Clutch Relay	8W-11-14
Airbag Control Module	8W-11-11, 12
Autostick Switch	8W-11-17
Back-Up Lamp Switch	8W-11-11
Blower Motor	8W-11-11
Brake Transmission Shift Interlock Solenoid	8W-11-14
Cargo Lamp	8W-11-15
Circuit Breaker No. 2 (FB)	8W-11-11
Controller Antilock Brake	8W-11-13
Dome Lamp	8W-11-15
Dome Lamp/Intrusion Sensor	8W-11-15
Driver Heated Seat Switch	8W-11-10
Engine Control Module	8W-11-13
EVAP/Purge Solenoid	8W-11-13
Front Power Window Switch	8W-11-11
Front Wiper Motor	8W-11-16
Front Wiper/Washer Switch	8W-11-16
Fuel Pump Relay	8W-11-13
Fuse 1	8W-11-6, 17
Fuse 2	8W-11-7
Fuse 3	8W-11-7
Fuse 4	8W-11-9
Fuse 5	8W-11-11
Fuse 6	8W-11-9, 11
Fuse 7	8W-11-11
Fuse 8	8W-11-12
Fuse 9	8W-11-12
Fuse 10	8W-11-13
Fuse 11	8W-11-13
Fuse 12	8W-11-14
Fuse 13	8W-11-15
Fuse 14	8W-11-16
Fuse 15	8W-11-16
Fuse 16	8W-11-17
Fuse 16/17	8W-11-19
Fuse 17	8W-11-9
Fuse 18	8W-11-18
Fuse 19	8W-11-19
Fuse 20	8W-11-19
Fuse Block	8W-11-2, 3, 6, 7, 9, 11, 12, 13, 14, 15, 16, 17, 18, 19
G201	8W-11-6, 9
Headlamp Leveling Switch	8W-11-19
Headlamp Relay	8W-11-6, 12
Headlamp Switch	8W-11-6, 7, 12
Heated Seat Module	8W-11-10
Heated Seat Relay	8W-11-9, 11
High Speed Radiator Fan Relay	8W-11-14
Ignition Switch	8W-11-17
Instrument Cluster	8W-11-6, 7, 12, 13, 15, 17
Left City Lamp	8W-11-8
Left Door Lock Switch	8W-11-7
Left Front Park/Turn Signal Lamp	8W-11-8
Left Headlamp Leveling Module	8W-11-19
Left High Beam Headlamp	8W-11-19
Left License Lamp	8W-11-8
Left Low Beam Headlamp	8W-11-19
Left Power Mirror	8W-11-18
Left Tail/Stop Lamp	8W-11-8
Left Visor/Vanity Lamp	8W-11-15
License Lamp	8W-11-8
Low Speed Radiator Fan Relay	8W-11-14
Map/Reading Lamps	8W-11-16
Multi-Function Switch	8W-11-16
Overhead Console Module	8W-11-15, 16
Passenger Heated Seat Switch	8W-11-10
Power Distribution Center	8W-11-9, 17, 19
Power Mirror Switch	8W-11-7, 15
Power Seat Switch	8W-11-9
Power Sunroof Module	8W-11-16
Powertrain Control Module	8W-11-13, 17
Radio	8W-11-16
Rear Window Defogger Switch	8W-11-11, 18
Rear Window Defogger	8W-11-18
Rear Wiper Motor	8W-11-16
Rear Wiper Switch	8W-11-16
Remote Keyless Entry Module	8W-11-6, 7, 13, 15
Right City Lamp	8W-11-8
Right Door Lock Switch	8W-11-7
Right Front Park/Turn Signal Lamp	8W-11-8
Right Headlamp Leveling Module	8W-11-19
Right High Beam Headlamp	8W-11-19
Right Low Beam Headlamp	8W-11-19
Right Power Mirror	8W-11-18
Right Tail/Stop Lamp	8W-11-8
Right Visor/Vanity Lamp	8W-11-15
Sentry Key Immobilizer Module	8W-11-13, 15
Throttle Inlet Pressure Solenoid	8W-11-13
Transmission Range Sensor	8W-11-11

LHD

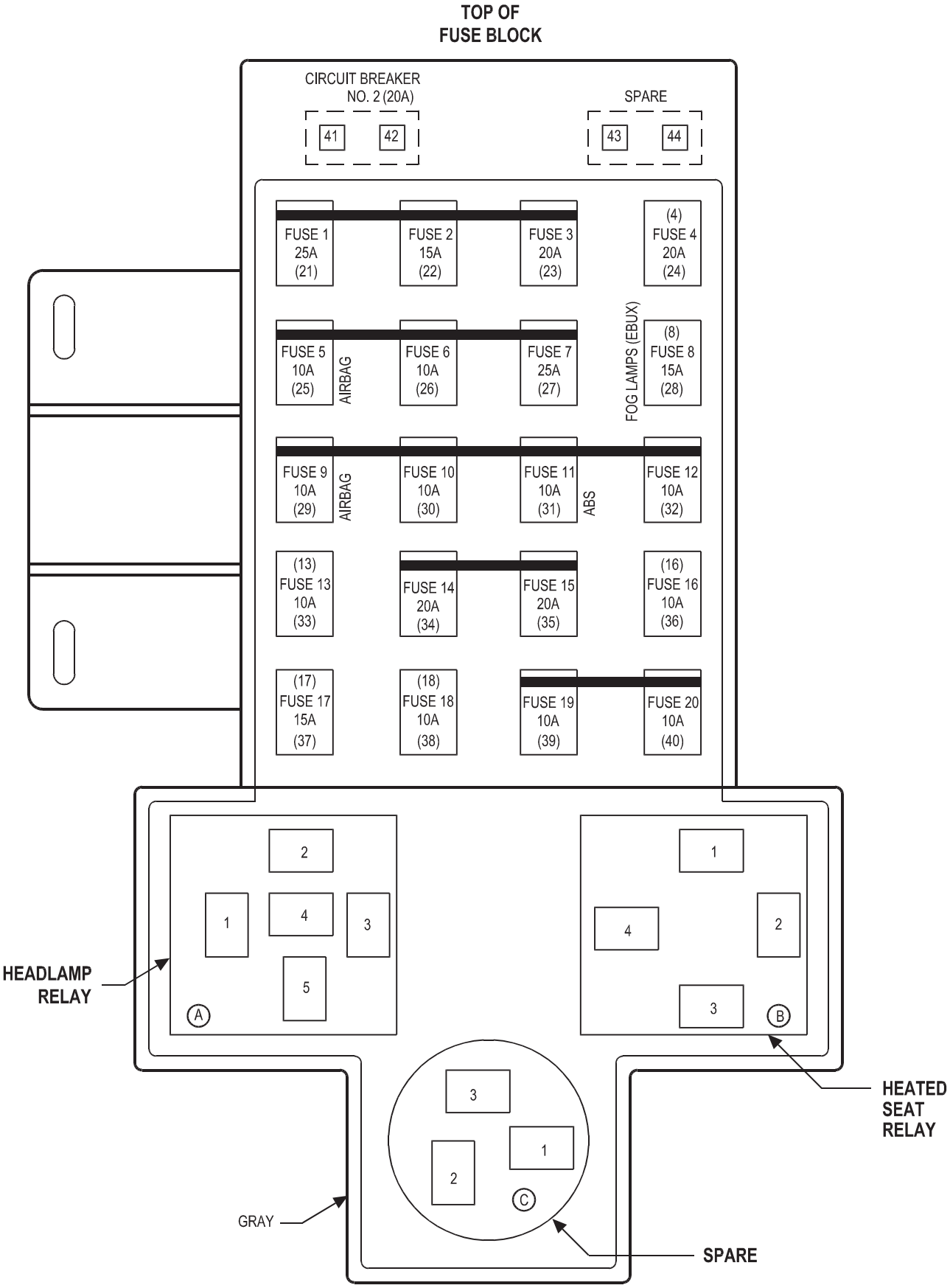
TOP OF
FUSE BLOCK
CIRCUIT BREAKER
NO. 2 (20A)
41
42
SPARE
43
44
FUSE 1
25A
(21)
FUSE 2
15A
(22)
FUSE 3
20A
(23)
(4)
FUSE 4
20A
(24)
FUSE 5
10A
(25)
AIRBAG
FUSE 6
10A
(26)
FUSE 7
25A
(27)
FOG LAMPS (EBUX)
(8)
FUSE 8
15A
(28)
FUSE 9
10A
(29)
AIRBAG
FUSE 10
10A
(30)
FUSE 11
10A
(31)
ABS
FUSE 12
10A
(32)
(13)
FUSE 13
10A
(33)
FUSE 14
20A
(34)
FUSE 15
20A
(35)
(16)
FUSE 16
10A
(36)
(17)
FUSE 17
15A
(37)
(18)
FUSE 18
10A
(38)
FUSE 19
10A
(39)
FUSE 20
10A
(40)
HEADLAMP
RELAY
A
B
HEATED
SEAT
RELAY
C
GRAY
SPARE

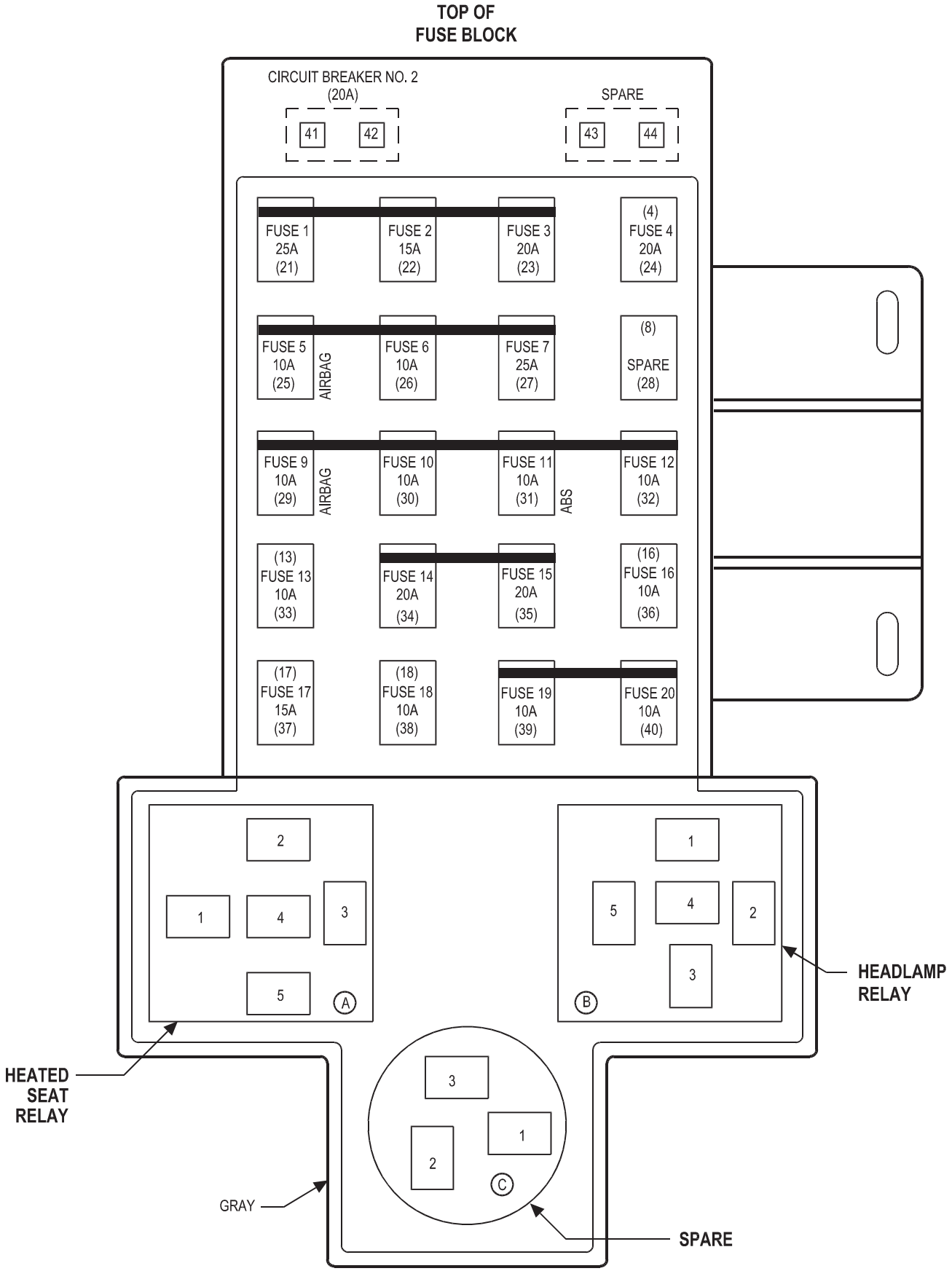
TOP OF
FUSE BLOCK
CIRCUIT BREAKER NO. 2
(20A)
41
42
SPARE
43
44
FUSE 1
25A
(21)
FUSE 2
15A
(22)
FUSE 3
20A
(23)
(4)
FUSE 4
20A
(24)
FUSE 5
10A
(25)
AIRBAG
FUSE 6
10A
(26)
FUSE 7
25A
(27)
(8)
SPARE
(28)
FUSE 9
10A
(29)
AIRBAG
FUSE 10
10A
(30)
FUSE 11
10A
(31)
ABS
FUSE 12
10A
(32)
(13)
FUSE 13
10A
(33)
FUSE 14
20A
(34)
FUSE 15
20A
(35)
(16)
FUSE 16
10A
(36)
(17)
FUSE 17
15A
(37)
(18)
FUSE 18
10A
(38)
FUSE 19
10A
(39)
FUSE 20
10A
(40)
A
B
C
HEADLAMP
RELAY
HEATED
SEAT
RELAY
GRAY
SPARE

FUSES

FUSE	AMPS	FUSED CIRCUIT	FUNCTION NAME
1	25A	F3 12LB/OR	FUSED B(+)
2	15A	F33 18PK/RD	FUSED B(+)
3	20A	F35 18RD	FUSED B(+)
4	20A	A120 16RD/LG ○○○	FUSED B(+)
5	10A	F25 18TN/LG	FUSED IGNITION SWITCH OUTPUT (RUN)
6	10A	F20 20WT	FUSED IGNITION SWITCH OUTPUT (RUN)
		F20 20WT △ △ △	FUSED IGNITION SWITCH OUTPUT (RUN)
7	25A	C1 14DG	FUSED IGNITION SWITCH OUTPUT (RUN)
8	15A	F39 18PK/LG ● ◪	FUSED HEADLAMP RELAY OUTPUT
9	10A	F15 18DG/WT ●	FUSED IGNITION SWITCH OUTPUT (RUN-START)
9	10A	F15 18DB/WT ●●	FUSED IGNITION SWITCH OUTPUT (RUN-START)
10	10A	G5 20DB/BK	FUSED IGNITION SWITCH OUTPUT (RUN-START)
11	10A	F12 20DB/WT	FUSED IGNITION SWITCH OUTPUT (RUN-START)
12	10A	F18 20LG/BK ◐	FUSED IGNITION SWITCH OUTPUT (RUN-START)
		F18 20LG/BK ■■ ◐	FUSED IGNITION SWITCH OUTPUT (RUN-START)
13	10A	M1 18PK	FUSED B(+)
14	20A	F10 18YL/RD	FUSED IGNITION SWITCH OUTPUT (RUN-ACC)
15	20A	L6 16RD/WT	FUSED IGNITION SWITCH OUTPUT (RUN-ACC)
16	10A	A81 20DG/RD ◆	FUSED B(+)
17	15A	F235 18RD △	FUSED B(+)
18	10A	C16 20LB/YL	FUSED REAR WINDOW DEFOGGER SWITCH OUTPUT
		C16 20LB/YL	FUSED REAR WINDOW DEFOGGER SWITCH OUTPUT
19	10A	L44 16VT/RD	FUSED RIGHT LOW BEAM OUTPUT
20	10A	L43 16VT	FUSED LEFT LOW BEAM OUTPUT
		L43 18VT ◪◪	FUSED LEFT LOW BEAM OUTPUT

CIRCUIT BREAKERS

C.B. NO. 1	-	-	-
C.B. NO. 2	20A	F21 14TN	FUSED IGNITION SWITCH OUTPUT (RUN)

▲ EXCEPT EXPORT
◆ AUTOSTICK
● LHD
●● RHD
○○○ POWER SEAT

△ △ △ EXCEPT HEATED SEATS
△ HEATED SEATS
◐ GAS
◪ EXCEPT HEADLAMP LEVELING
◪◪ HEADLAMP LEVELING
■■ EATX

RELAYS

HEADLAMP RELAY (LHD)

CAVITY	CIRCUIT	FUNCTION
A1	Z1 20BK	GROUND
A2	L4 16VT/WT	HEADLAMP RELAY OUTPUT
A3	L3 16RD/OR	HEADLAMP RELAY CONTROL
A4	F34 18TN/BK ◪	HEADLAMP RELAY OUTPUT
A5	F3 12LB/OR	FUSED B(+)

HEADLAMP RELAY (RHD)

CAVITY	CIRCUIT	FUNCTION
B1	Z1 20BK	GROUND
B2	L4 16VT/WT	HEADLAMP RELAY OUTPUT
B3	L3 16RD/OR	HEADLAMP RELAY CONTROL
B4	-	-
B5	F3 12LB/OR	FUSED B(+)

HEATED SEAT RELAY (LHD)

CAVITY	CIRCUIT	FUNCTION
B1	Z1 20BK	GROUND
B2	F235 18RD	FUSED B(+)
B3	F20 20WT	HEATED SEAT RELAY CONTROL
B4	F98 18RD/WT	HEATED SEAT RELAY OUTPUT
B5	-	-

HEATED SEAT RELAY (RHD)

CAVITY	CIRCUIT	FUNCTION
A1	Z1 20BK	GROUND
A2	F235 18RD	FUSED B(+)
A3	F20 20WT	HEATED SEAT RELAY CONTROL
A4	-	-
A5	F98 18RD/WT	HEATED SEAT RELAY OUTPUT

◪ EXCEPT HEADLAMP LEVELING

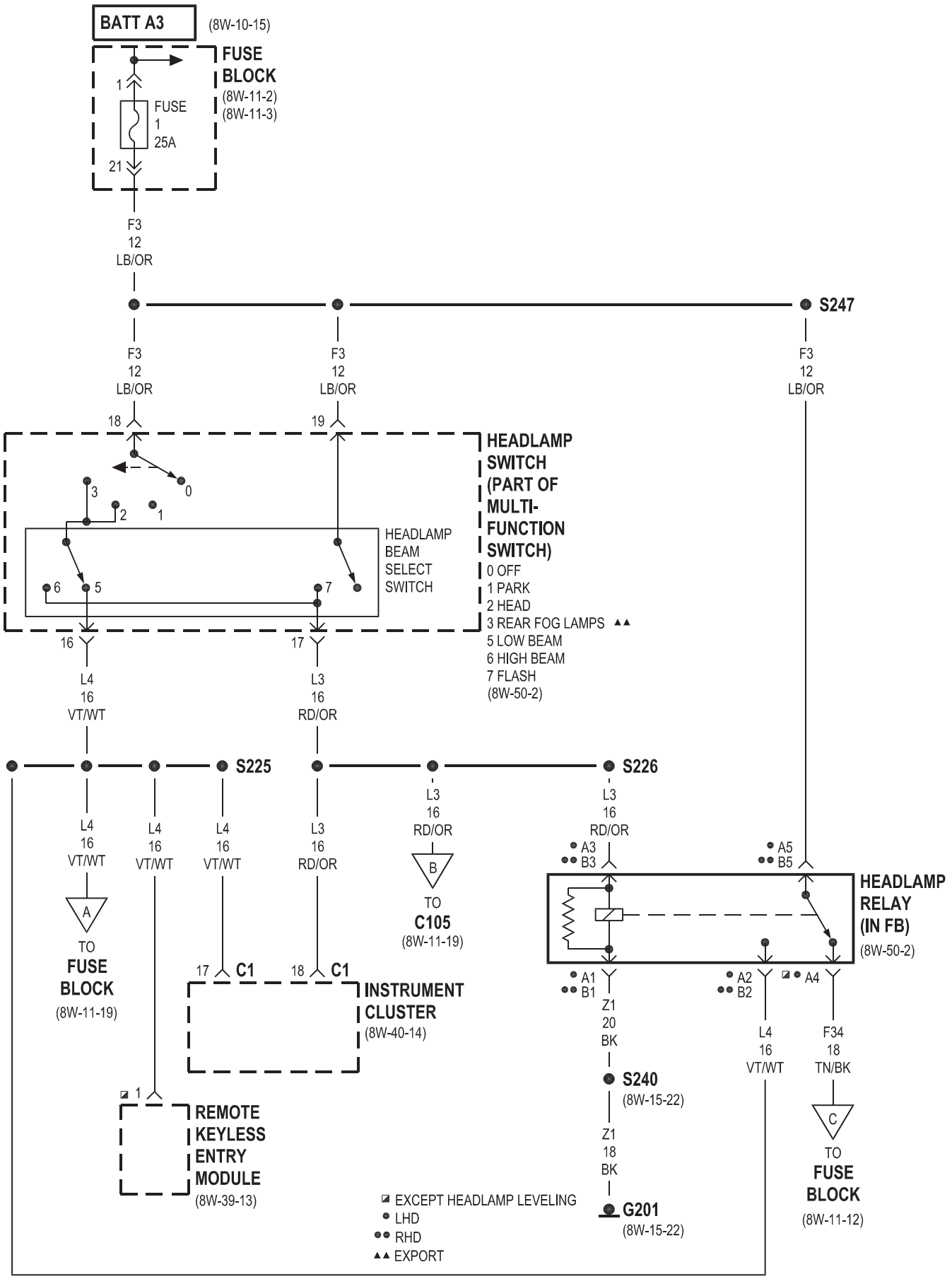
BATT A3
(8W-10-15)
FUSE BLOCK
(8W-11-2)
(8W-11-3)
1
FUSE 1 25A
21
F3 12 LB/OR
S247
F3 12 LB/OR
F3 12 LB/OR
F3 12 LB/OR
18
19
HEADLAMP SWITCH (PART OF MULTI-FUNCTION SWITCH)
0 OFF
1 PARK
2 HEAD
3 REAR FOG LAMPS ▲▲
5 LOW BEAM
6 HIGH BEAM
7 FLASH
(8W-50-2)
HEADLAMP BEAM SELECT SWITCH
16
17
L4 16 VT/WT
L3 16 RD/OR
S225
S226
L4 16 VT/WT
L4 16 VT/WT
L4 16 VT/WT
L3 16 RD/OR
L3 16 RD/OR
L3 16 RD/OR
A
TO FUSE BLOCK
(8W-11-19)
B
TO C105
(8W-11-19)
17 C1
18 C1
INSTRUMENT CLUSTER
(8W-40-14)
A3 B3
A5 B5
HEADLAMP RELAY (IN FB)
(8W-50-2)
A1 B1
A2 B2
A4
Z1 20 BK
L4 16 VT/WT
F34 18 TN/BK
S240
(8W-15-22)
Z1 18 BK
G201
(8W-15-22)
C
TO FUSE BLOCK
(8W-11-12)
1
REMOTE KEYLESS ENTRY MODULE
(8W-39-13)
◪ EXCEPT HEADLAMP LEVELING
● LHD
●● RHD
▲▲ EXPORT

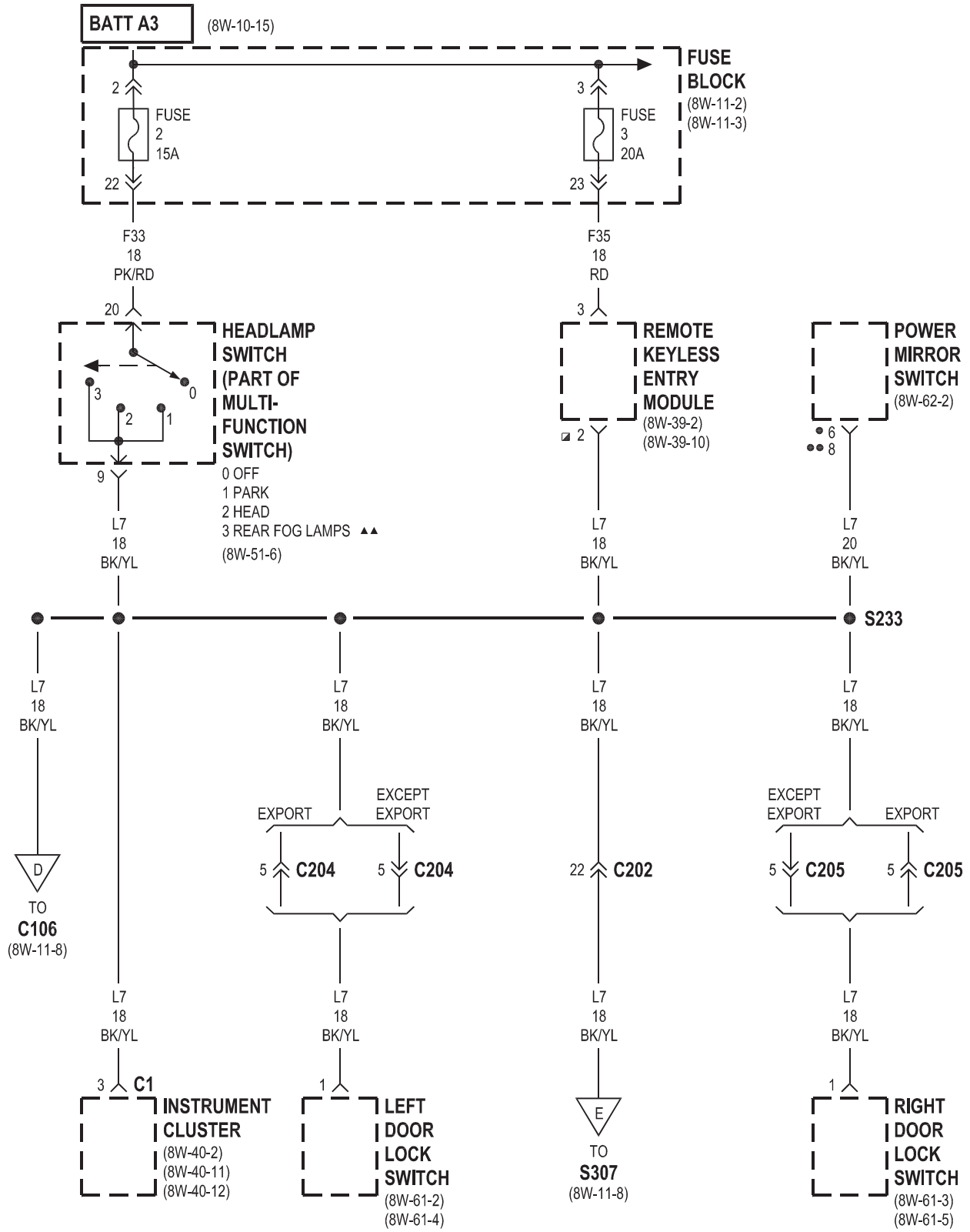
BATT A3
(8W-10-15)
FUSE BLOCK
(8W-11-2)
(8W-11-3)
2
FUSE 2 15A
22
3
FUSE 3 20A
23
F33 18 PK/RD
F35 18 RD
20
HEADLAMP SWITCH (PART OF MULTI-FUNCTION SWITCH)
0 OFF
1 PARK
2 HEAD
3 REAR FOG LAMPS ▲▲
(8W-51-6)
9
3
REMOTE KEYLESS ENTRY MODULE
(8W-39-2)
(8W-39-10)
POWER MIRROR SWITCH
(8W-62-2)
L7 18 BK/YL
L7 20 BK/YL
S233
EXPORT
EXCEPT EXPORT
5 C204
5 C204
22 C202
5 C205
5 C205
D
TO C106
(8W-11-8)
3 C1
INSTRUMENT CLUSTER
(8W-40-2)
(8W-40-11)
(8W-40-12)
1
LEFT DOOR LOCK SWITCH
(8W-61-2)
(8W-61-4)
E
TO S307
(8W-11-8)
RIGHT DOOR LOCK SWITCH
(8W-61-3)
(8W-61-5)
EXCEPT HEADLAMP LEVELING
LHD
RHD
▲▲ EXPORT

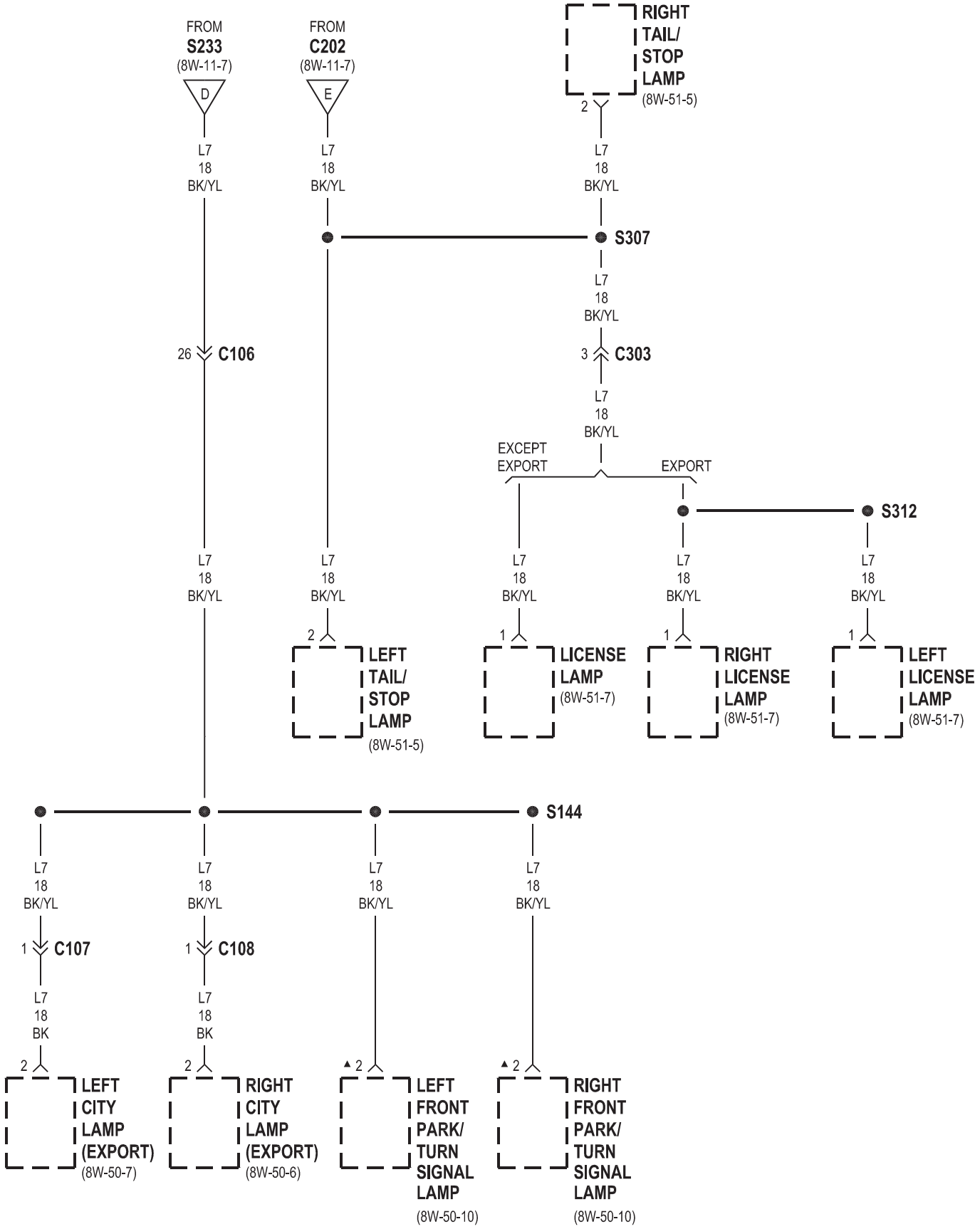

▲ EXCEPT EXPORT

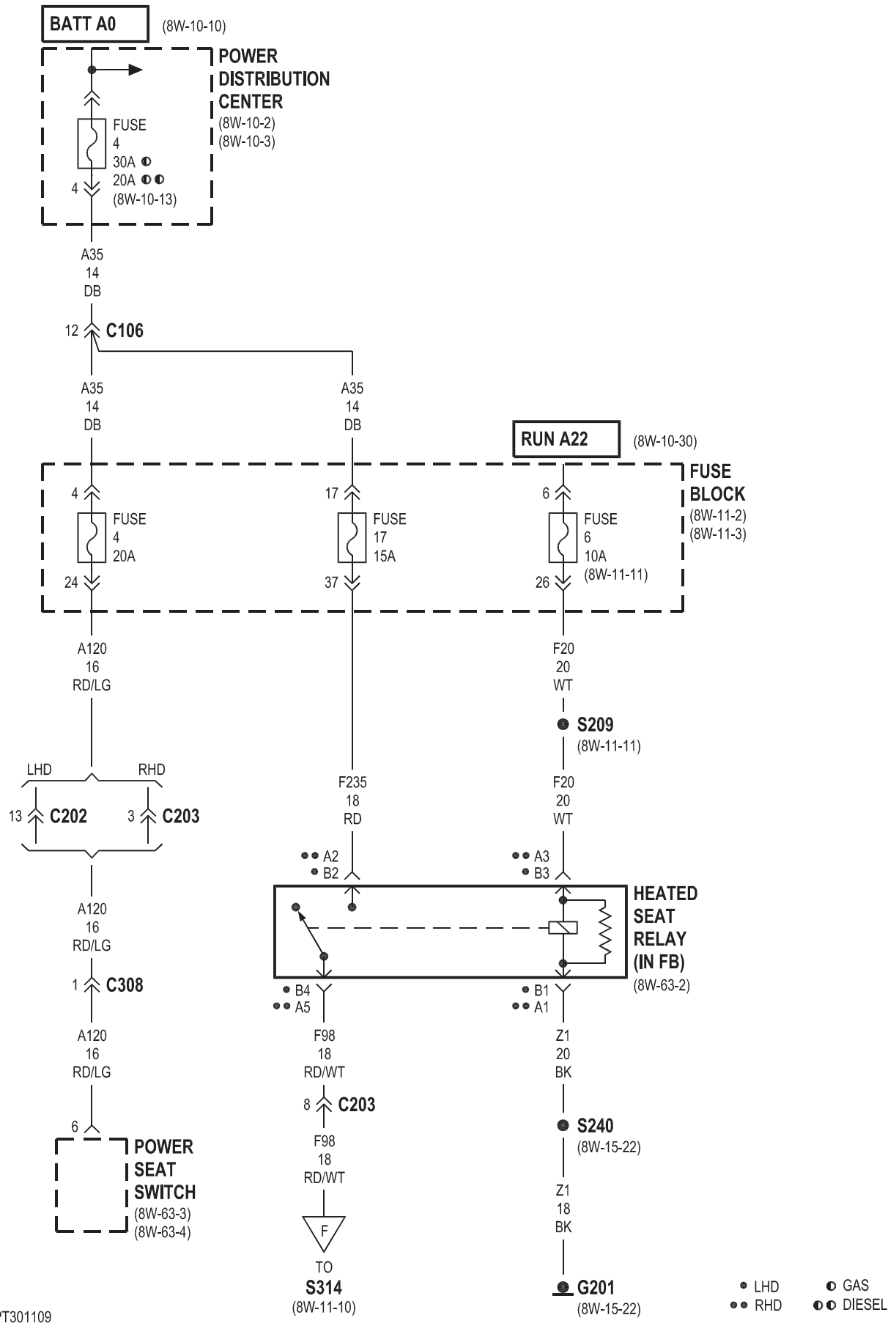
BATT A0
(8W-10-10)
POWER DISTRIBUTION CENTER
(8W-10-2)
(8W-10-3)
FUSE 4 30A 20A
(8W-10-13)
4
A35 14 DB
12
C106
A35 14 DB
A35 14 DB
RUN A22
(8W-10-30)
FUSE BLOCK
(8W-11-2)
(8W-11-3)
4
FUSE 4 20A
24
17
FUSE 17 15A
37
6
FUSE 6 10A
(8W-11-11)
26
A120 16 RD/LG
F20 20 WT
S209
(8W-11-11)
LHD
RHD
13
C202
3
C203
F235 18 RD
F20 20 WT
A2
B2
A3
B3
HEATED SEAT RELAY (IN FB)
(8W-63-2)
A120 16 RD/LG
1
C308
B4
A5
B1
A1
A120 16 RD/LG
F98 18 RD/WT
Z1 20 BK
6
8
C203
S240
(8W-15-22)
POWER SEAT SWITCH
(8W-63-3)
(8W-63-4)
F98 18 RD/WT
Z1 18 BK
F
TO
S314
(8W-11-10)
G201
(8W-15-22)
LHD
RHD
GAS
DIESEL

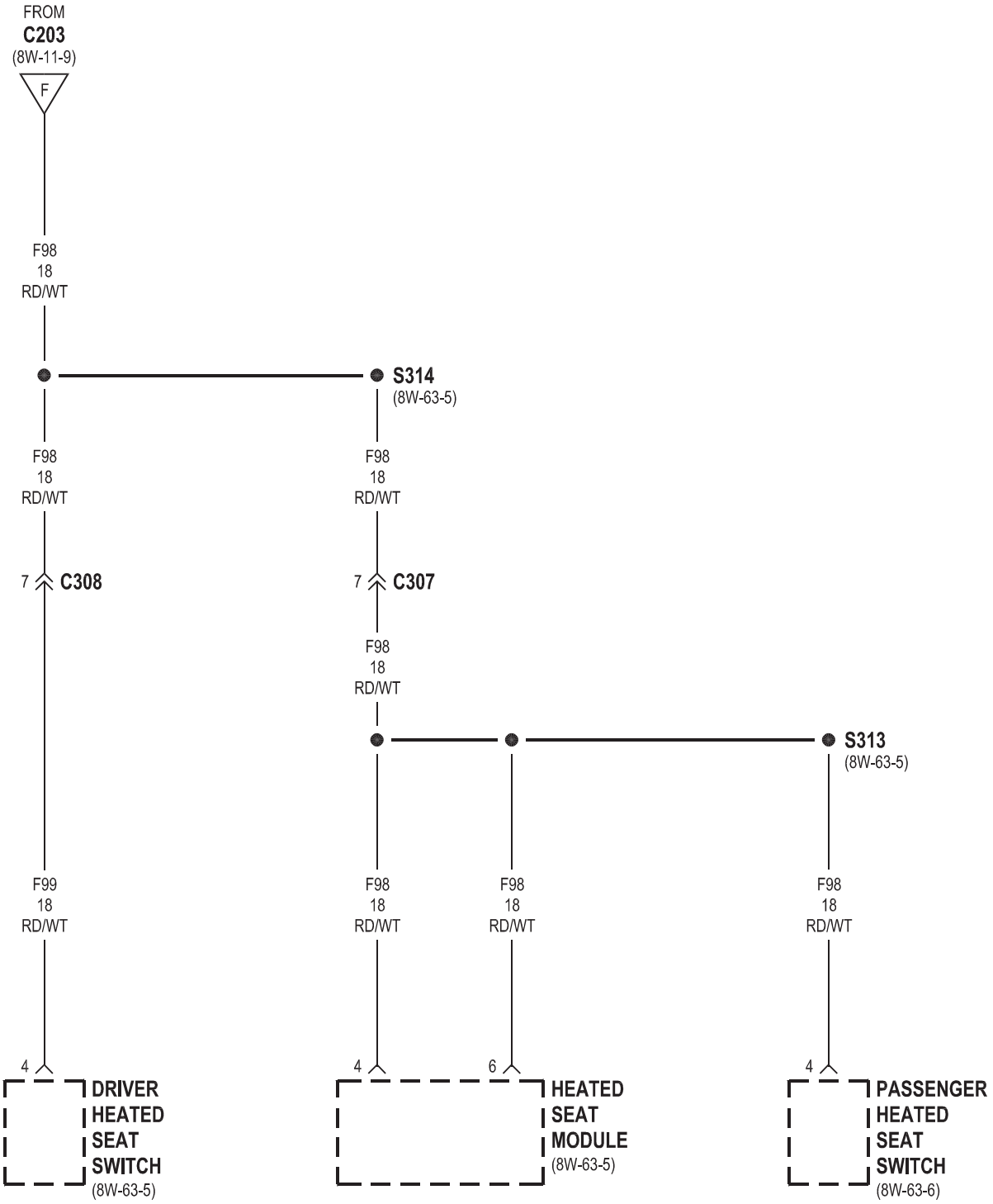
FROM
C203
(8W-11-9)
F
F98
18
RD/WT
S314
(8W-63-5)
F98
18
RD/WT
F98
18
RD/WT
7
C308
7
C307
F98
18
RD/WT
S313
(8W-63-5)
F99
18
RD/WT
F98
18
RD/WT
F98
18
RD/WT
F98
18
RD/WT
4
4
6
4
DRIVER
HEATED
SEAT
SWITCH
(8W-63-5)
HEATED
SEAT
MODULE
(8W-63-5)
PASSENGER
HEATED
SEAT
SWITCH
(8W-63-6)

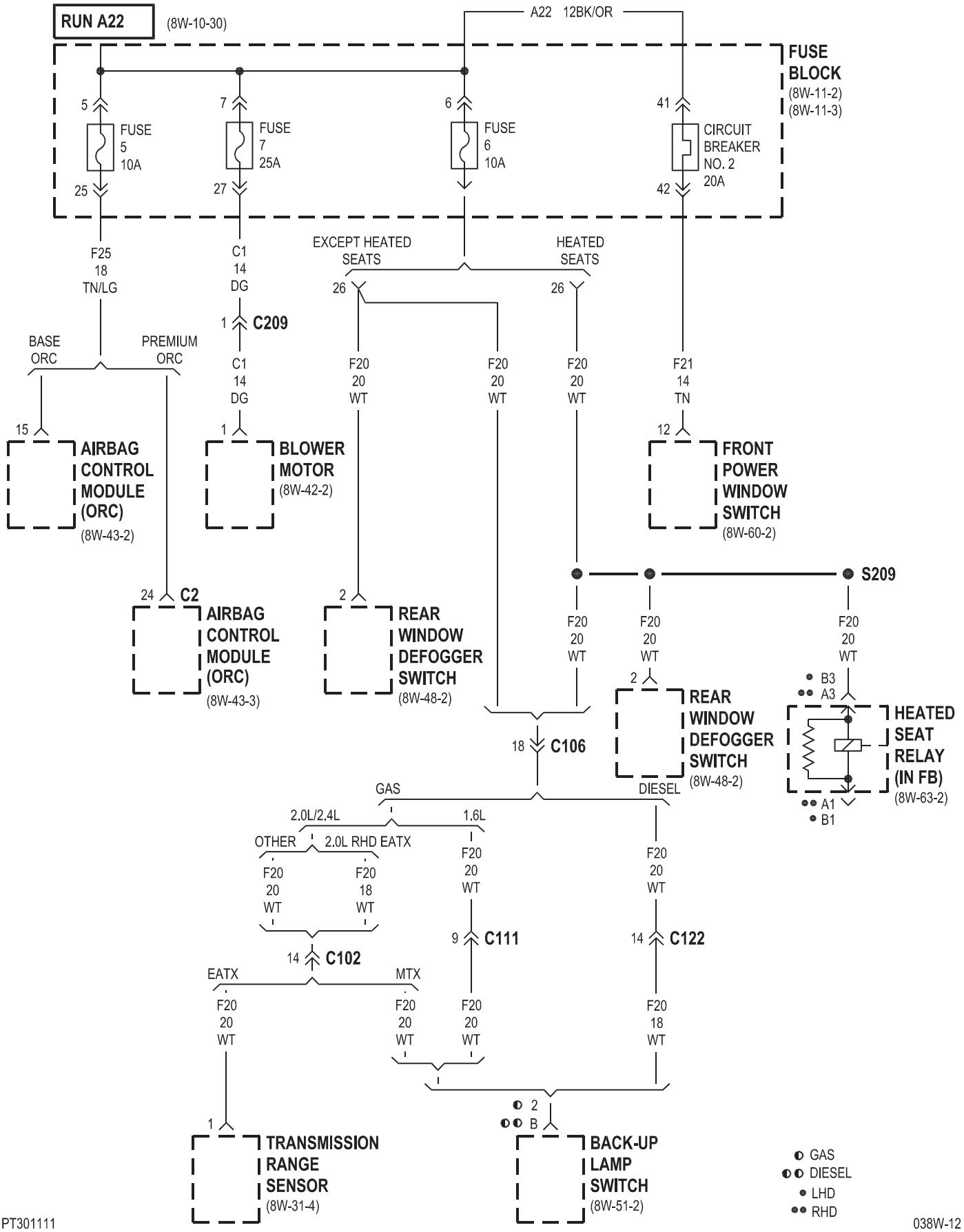
RUN A22
(8W-10-30)
A22 12BK/OR
FUSE BLOCK
(8W-11-2)
(8W-11-3)
5
FUSE 5 10A
25
7
FUSE 7 25A
27
6
FUSE 6 10A
41
CIRCUIT BREAKER NO. 2 20A
42
F25 18 TN/LG
C1 14 DG
EXCEPT HEATED SEATS
HEATED SEATS
26
26
1 C209
BASE ORC
PREMIUM ORC
C1 14 DG
F20 20 WT
F20 20 WT
F20 20 WT
F21 14 TN
15
AIRBAG CONTROL MODULE (ORC)
(8W-43-2)
1
BLOWER MOTOR
(8W-42-2)
12
FRONT POWER WINDOW SWITCH
(8W-60-2)
S209
24 C2
AIRBAG CONTROL MODULE (ORC)
(8W-43-3)
2
REAR WINDOW DEFOGGER SWITCH
(8W-48-2)
F20 20 WT
F20 20 WT
F20 20 WT
2
REAR WINDOW DEFOGGER SWITCH
(8W-48-2)
B3
A3
HEATED SEAT RELAY (IN FB)
(8W-63-2)
A1
B1
18 C106
GAS
DIESEL
2.0L/2.4L
1.6L
OTHER
2.0L RHD EATX
F20 20 WT
F20 18 WT
F20 20 WT
F20 20 WT
14 C102
9 C111
14 C122
EATX
MTX
F20 20 WT
F20 20 WT
F20 20 WT
F20 18 WT
2
B
1
TRANSMISSION RANGE SENSOR
(8W-31-4)
BACK-UP LAMP SWITCH
(8W-51-2)
GAS
DIESEL
LHD
RHD

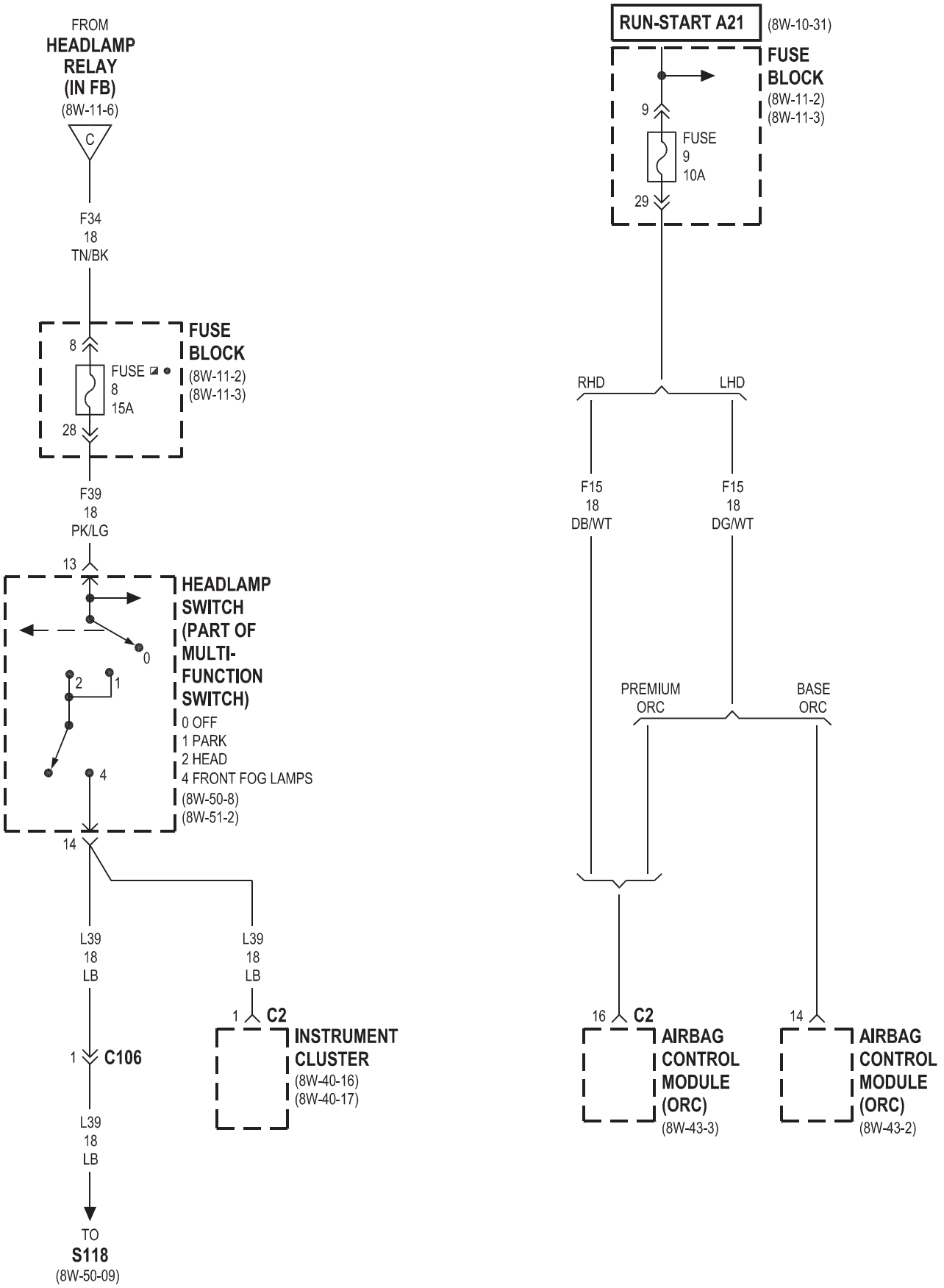

● LHD
◪ EXCEPT HEADLAMP LEVELING

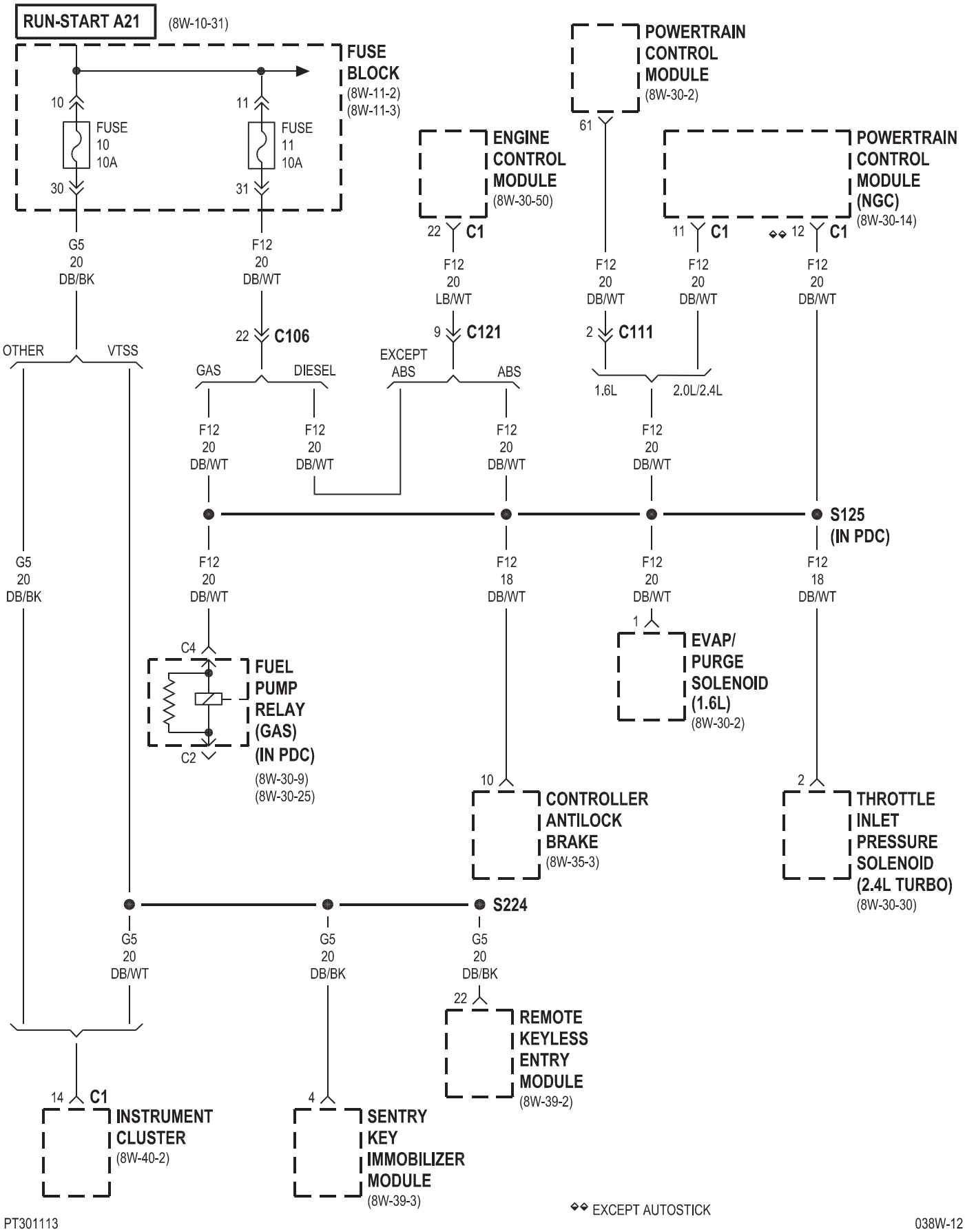
RUN-START A21
(8W-10-31)
FUSE BLOCK
(8W-11-2)
(8W-11-3)
10
FUSE 10 10A
30
11
FUSE 11 10A
31
G5 20 DB/BK
F12 20 DB/WT
POWERTRAIN CONTROL MODULE
(8W-30-2)
61
ENGINE CONTROL MODULE
(8W-30-50)
22 C1
F12 20 LB/WT
POWERTRAIN CONTROL MODULE (NGC)
(8W-30-14)
11 C1
12 C1
F12 20 DB/WT
22 C106
9 C121
2 C111
OTHER
VTSS
GAS
DIESEL
EXCEPT ABS
ABS
1.6L
2.0L/2.4L
S125 (IN PDC)
F12 18 DB/WT
C4
C2
FUEL PUMP RELAY (GAS) (IN PDC)
(8W-30-9)
(8W-30-25)
1
EVAP/ PURGE SOLENOID (1.6L)
(8W-30-2)
10
CONTROLLER ANTILOCK BRAKE
(8W-35-3)
2
THROTTLE INLET PRESSURE SOLENOID (2.4L TURBO)
(8W-30-30)
S224
G5 20 DB/BK
22
REMOTE KEYLESS ENTRY MODULE
(8W-39-2)
14 C1
INSTRUMENT CLUSTER
(8W-40-2)
4
SENTRY KEY IMMOBILIZER MODULE
(8W-39-3)
◆◆ EXCEPT AUTOSTICK

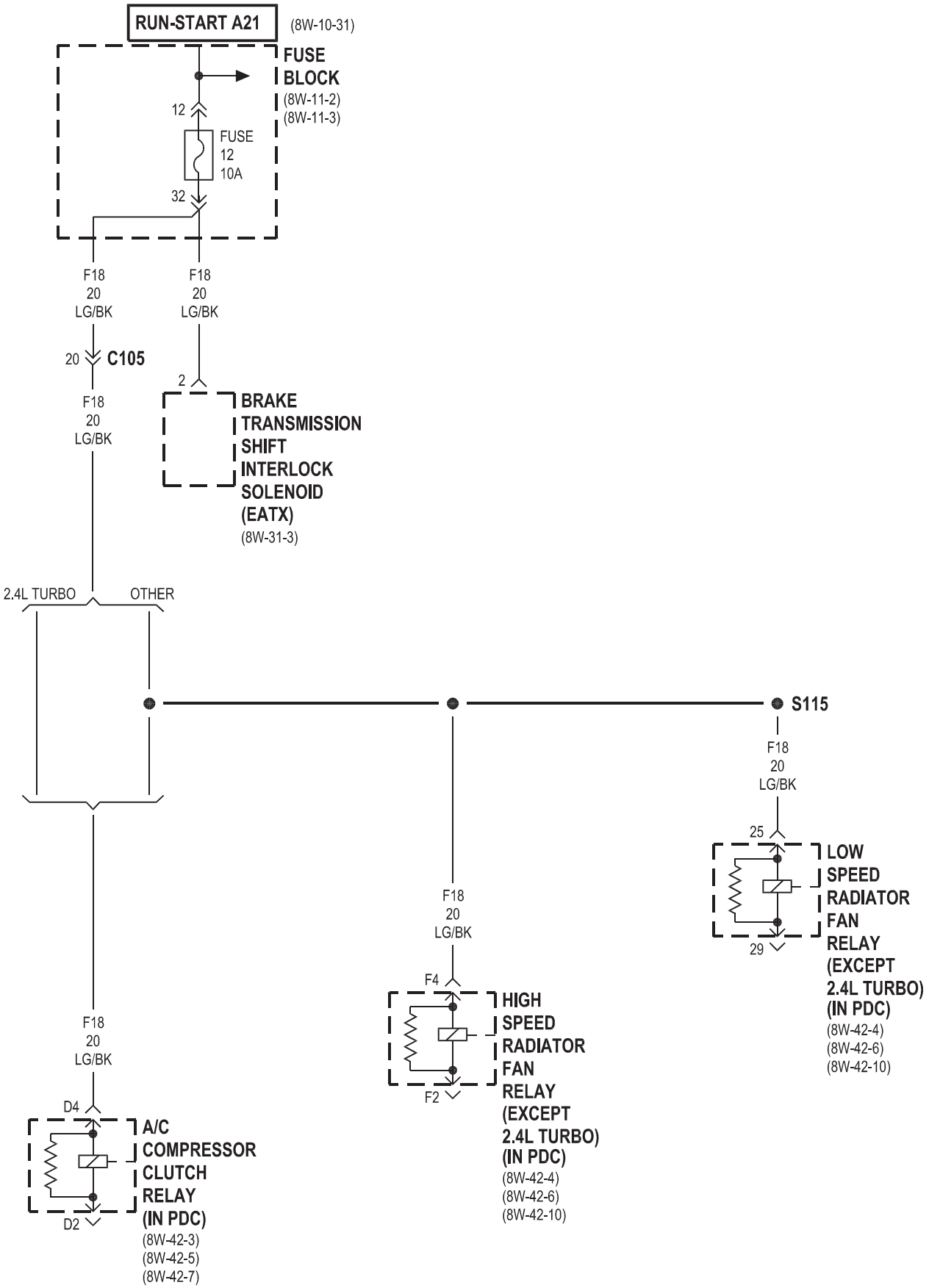
RUN-START A21
(8W-10-31)
FUSE BLOCK
(8W-11-2)
(8W-11-3)
12
FUSE 12 10A
32
F18 20 LG/BK
F18 20 LG/BK
20
C105
2
F18 20 LG/BK
BRAKE TRANSMISSION SHIFT INTERLOCK SOLENOID (EATX)
(8W-31-3)
2.4L TURBO
OTHER
S115
F18 20 LG/BK
25
LOW SPEED RADIATOR FAN RELAY (EXCEPT 2.4L TURBO) (IN PDC)
(8W-42-4)
(8W-42-6)
(8W-42-10)
29
F18 20 LG/BK
F4
HIGH SPEED RADIATOR FAN RELAY (EXCEPT 2.4L TURBO) (IN PDC)
(8W-42-4)
(8W-42-6)
(8W-42-10)
F2
F18 20 LG/BK
D4
A/C COMPRESSOR CLUTCH RELAY (IN PDC)
(8W-42-3)
(8W-42-5)
(8W-42-7)
D2

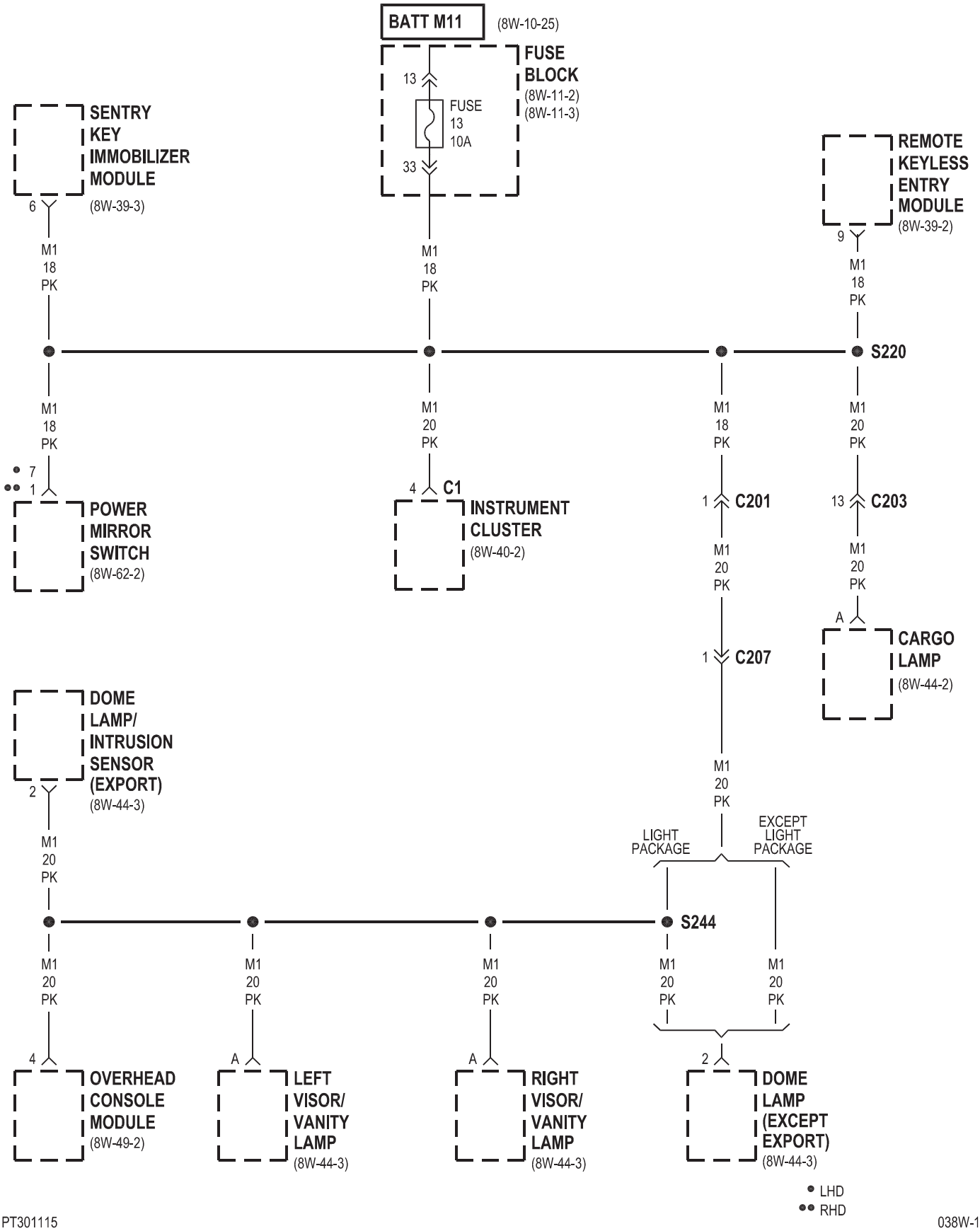
BATT M11
(8W-10-25)
FUSE BLOCK
(8W-11-2)
(8W-11-3)
13
FUSE 13 10A
33
SENTRY KEY IMMOBILIZER MODULE
(8W-39-3)
6
M1 18 PK
M1 18 PK
REMOTE KEYLESS ENTRY MODULE
(8W-39-2)
9
M1 18 PK
S220
M1 18 PK
M1 20 PK
M1 18 PK
M1 20 PK
7
1
POWER MIRROR SWITCH
(8W-62-2)
4
C1
INSTRUMENT CLUSTER
(8W-40-2)
1
C201
13
C203
M1 20 PK
M1 20 PK
A
CARGO LAMP
(8W-44-2)
1
C207
DOME LAMP/ INTRUSION SENSOR (EXPORT)
(8W-44-3)
2
M1 20 PK
M1 20 PK
LIGHT PACKAGE
EXCEPT LIGHT PACKAGE
S244
M1 20 PK
M1 20 PK
M1 20 PK
M1 20 PK
M1 20 PK
4
OVERHEAD CONSOLE MODULE
(8W-49-2)
A
LEFT VISOR/ VANITY LAMP
(8W-44-3)
A
RIGHT VISOR/ VANITY LAMP
(8W-44-3)
2
DOME LAMP (EXCEPT EXPORT)
(8W-44-3)
LHD
RHD

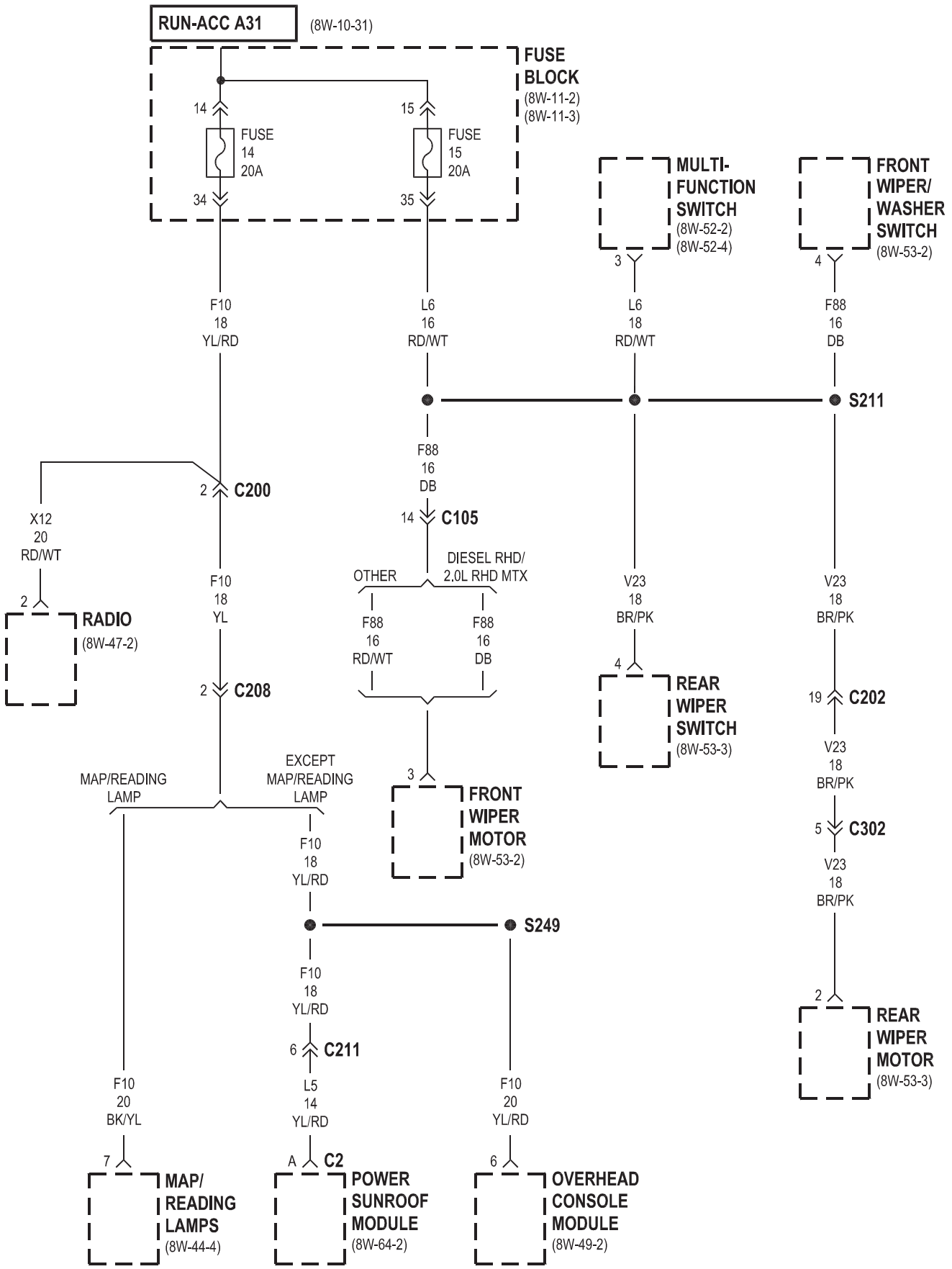
RUN-ACC A31
(8W-10-31)
FUSE BLOCK
(8W-11-2)
(8W-11-3)
14
15
FUSE 14 20A
FUSE 15 20A
34
35
MULTI-FUNCTION SWITCH
(8W-52-2)
(8W-52-4)
FRONT WIPER/ WASHER SWITCH
(8W-53-2)
3
4
F10 18 YL/RD
L6 16 RD/WT
L6 18 RD/WT
F88 16 DB
S211
F88 16 DB
2
C200
14
C105
X12 20 RD/WT
2
RADIO
(8W-47-2)
F10 18 YL
OTHER
DIESEL RHD/ 2.0L RHD MTX
F88 16 RD/WT
F88 16 DB
V23 18 BR/PK
V23 18 BR/PK
4
REAR WIPER SWITCH
(8W-53-3)
2
C208
19
C202
V23 18 BR/PK
MAP/READING LAMP
EXCEPT MAP/READING LAMP
3
FRONT WIPER MOTOR
(8W-53-2)
5
C302
F10 18 YL/RD
V23 18 BR/PK
S249
F10 18 YL/RD
2
REAR WIPER MOTOR
(8W-53-3)
6
C211
F10 20 BK/YL
L5 14 YL/RD
F10 20 YL/RD
7
A
C2
6
MAP/ READING LAMPS
(8W-44-4)
POWER SUNROOF MODULE
(8W-64-2)
OVERHEAD CONSOLE MODULE
(8W-49-2)

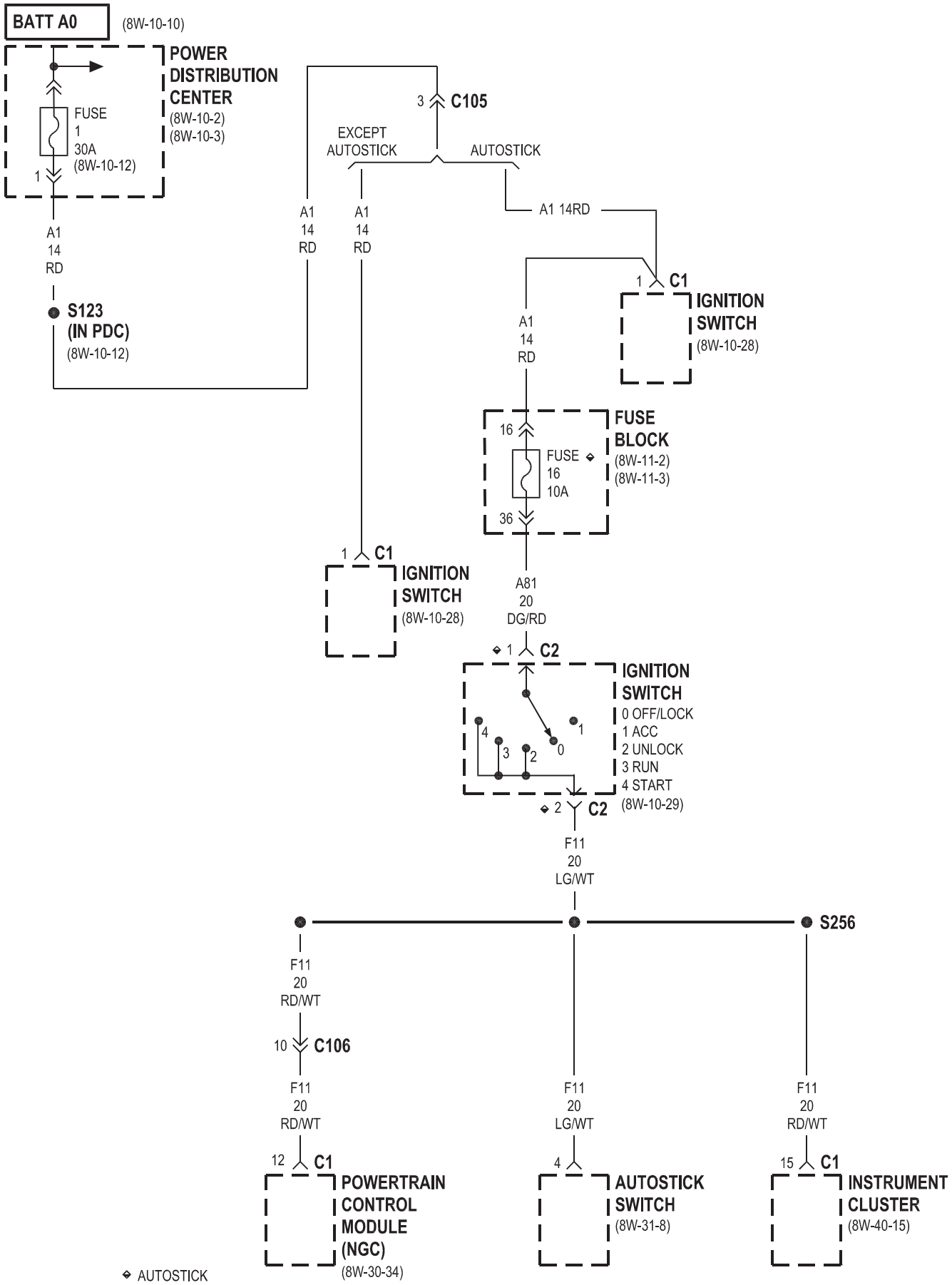
BATT A0
(8W-10-10)
POWER DISTRIBUTION CENTER
(8W-10-2)
(8W-10-3)
FUSE 1 30A
(8W-10-12)
1
A1 14 RD
S123 (IN PDC)
(8W-10-12)
3
C105
EXCEPT AUTOSTICK
AUTOSTICK
A1 14 RD
A1 14 RD
A1 14 RD
1
C1
IGNITION SWITCH
(8W-10-28)
A1 14 RD
16
FUSE 16 10A
36
FUSE BLOCK
(8W-11-2)
(8W-11-3)
1
C1
IGNITION SWITCH
(8W-10-28)
A81 20 DG/RD
1
C2
IGNITION SWITCH
0 OFF/LOCK
1 ACC
2 UNLOCK
3 RUN
4 START
(8W-10-29)
2
C2
F11 20 LG/WT
S256
F11 20 RD/WT
10
C106
F11 20 RD/WT
12
C1
POWERTRAIN CONTROL MODULE (NGC)
(8W-30-34)
F11 20 LG/WT
4
AUTOSTICK SWITCH
(8W-31-8)
F11 20 RD/WT
15
C1
INSTRUMENT CLUSTER
(8W-40-15)
◆ AUTOSTICK

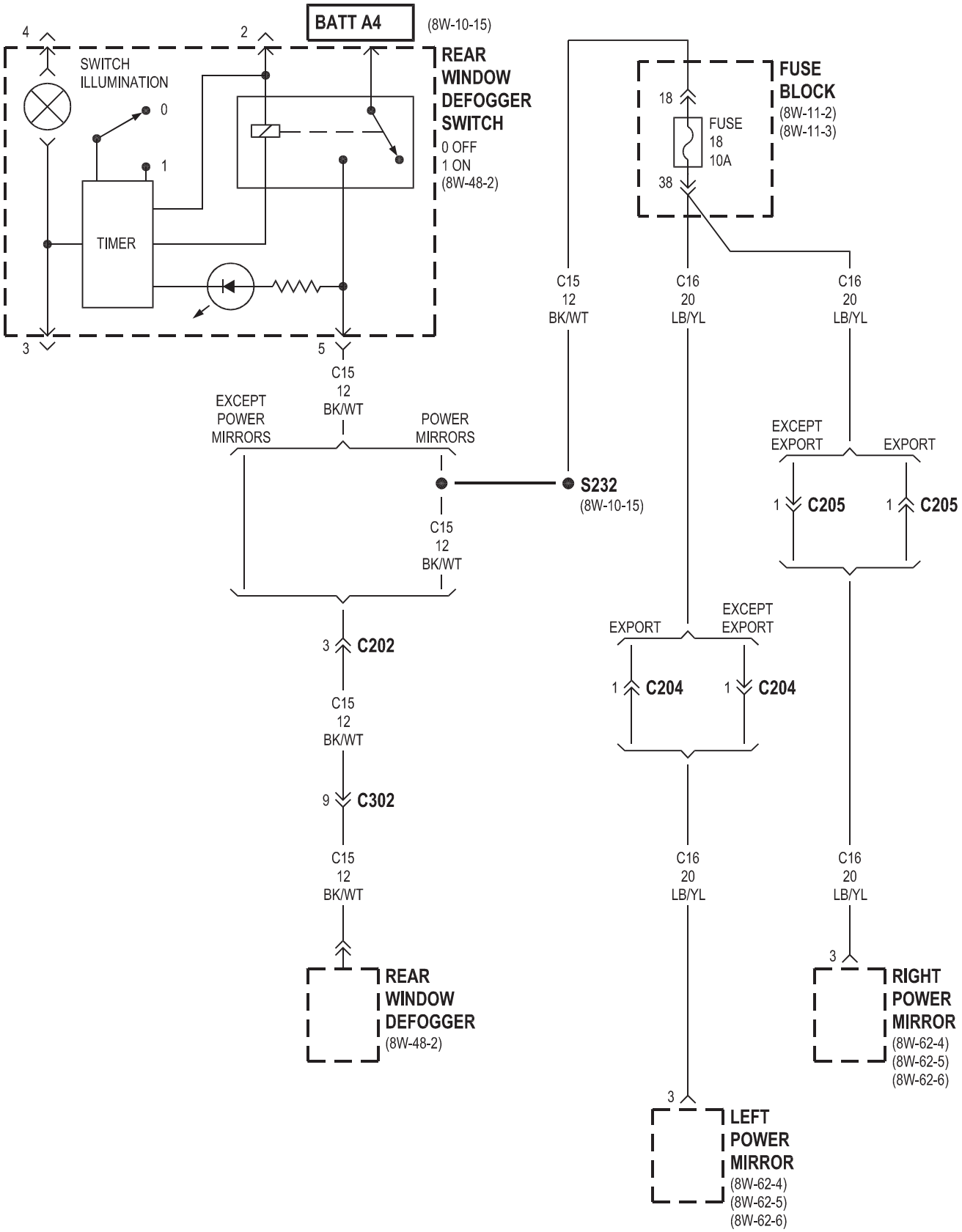
BATT A4
(8W-10-15)
4
2
SWITCH
ILLUMINATION
0
1
TIMER
REAR
WINDOW
DEFOGGER
SWITCH
0 OFF
1 ON
(8W-48-2)
3
5
C15
12
BK/WT
FUSE
BLOCK
(8W-11-2)
(8W-11-3)
18
FUSE
18
10A
38
C15
12
BK/WT
C16
20
LB/YL
C16
20
LB/YL
EXCEPT
POWER
MIRRORS
POWER
MIRRORS
S232
(8W-10-15)
C15
12
BK/WT
EXCEPT
EXPORT
EXPORT
1 C205
1 C205
3 C202
EXPORT
EXCEPT
EXPORT
1 C204
1 C204
C15
12
BK/WT
9 C302
C15
12
BK/WT
C16
20
LB/YL
C16
20
LB/YL
3
REAR
WINDOW
DEFOGGER
(8W-48-2)
3
RIGHT
POWER
MIRROR
(8W-62-4)
(8W-62-5)
(8W-62-6)
3
LEFT
POWER
MIRROR
(8W-62-4)
(8W-62-5)
(8W-62-6)

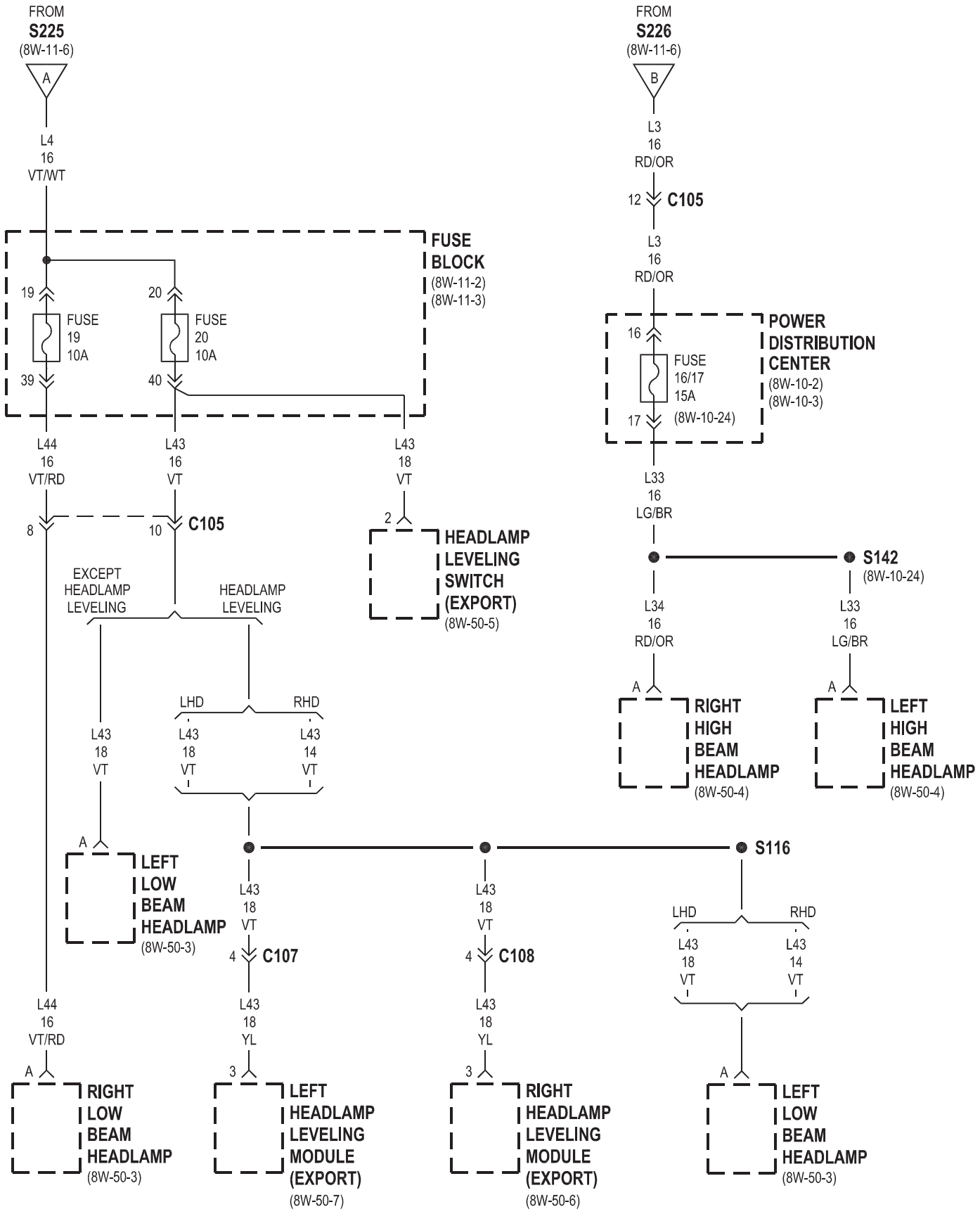
FROM
S225
(8W-11-6)
A
L4
16
VT/WT
FUSE
BLOCK
(8W-11-2)
(8W-11-3)
19
20
FUSE
19
10A
FUSE
20
10A
39
40
L44
16
VT/RD
L43
16
VT
L43
18
VT
8
10
C105
2
HEADLAMP
LEVELING
SWITCH
(EXPORT)
(8W-50-5)
EXCEPT
HEADLAMP
LEVELING
HEADLAMP
LEVELING
LHD
RHD
L43
18
VT
L43
18
VT
L43
14
VT
A
LEFT
LOW
BEAM
HEADLAMP
(8W-50-3)
L43
18
VT
4
C107
L43
18
VT
4
C108
S116
LHD
RHD
L43
18
VT
L43
14
VT
L44
16
VT/RD
L43
18
YL
L43
18
YL
A
RIGHT
LOW
BEAM
HEADLAMP
(8W-50-3)
3
LEFT
HEADLAMP
LEVELING
MODULE
(EXPORT)
(8W-50-7)
3
RIGHT
HEADLAMP
LEVELING
MODULE
(EXPORT)
(8W-50-6)
A
LEFT
LOW
BEAM
HEADLAMP
(8W-50-3)
FROM
S226
(8W-11-6)
B
L3
16
RD/OR
12
C105
L3
16
RD/OR
16
FUSE
16/17
15A
17
(8W-10-24)
POWER
DISTRIBUTION
CENTER
(8W-10-2)
(8W-10-3)
L33
16
LG/BR
S142
(8W-10-24)
L34
16
RD/OR
L33
16
LG/BR
A
RIGHT
HIGH
BEAM
HEADLAMP
(8W-50-4)
A
LEFT
HIGH
BEAM
HEADLAMP
(8W-50-4)

8W-15 GROUND DISTRIBUTION

Component	Page
A/C Compressor Clutch	8W-15-10, 11
A/C-Heater Control Switch	8W-15-23
Airbag Control Module	8W-15-23
Autostick Switch	8W-15-23
Battery	8W-15-2
Brake Lamp Switch	8W-15-3, 9, 11, 15, 16
Brake Warning Indicator Switch	8W-15-3, 9, 11, 15, 16
Center High Mounted Stop Lamp	8W-15-26
Center Stack Lamp	8W-15-21
Cigar Lighter	8W-15-23
Clutch Pedal Position Switch	8W-15-3, 4, 5, 8, 9
Controller Antilock Brake	8W-15-12
Data Link Connector	8W-15-3, 4, 5, 6, 7, 8
Dome Lamp/Intrusion Sensor	8W-15-18
Driver Door Ajar Switch	8W-15-19
Driver Door Power Lock Motor/Ajar Switch	8W-15-19, 20
Driver Heated Seat Cushion	8W-15-25
Driver Heated Seat Switch	8W-15-25
Driver Seat Belt Switch	8W-15-27
Engine Control Module	8W-15-7, 8
Front Power Window Switch	8W-15-23
Front Wiper Motor	8W-15-10, 11, 15
Front Wiper/Washer Switch	8W-15-22
Fuel Heater Relay	8W-15-7, 8
Fuel Pump Module	8W-15-14, 15, 16
G100	8W-15-2
G101	8W-15-2
G102	8W-15-3, 4, 5, 6, 7, 8
G103	8W-15-10, 11, 12
G104	8W-15-13, 14, 15, 16
G105	8W-15-17
G106	8W-15-17
G200	8W-15-18
G201	8W-15-21, 22
G202	8W-15-23
G203	8W-15-23
G204	8W-15-24
G300	8W-15-25, 27
G301	8W-15-28
Generator	8W-15-10, 11
Headlamp Leveling Switch	8W-15-21
Headlamp Relay	8W-15-22
Heated Seat Module	8W-15-25
Heated Seat Relay	8W-15-22
High Note Horn	8W-15-14, 15
Hood Ajar Switch	8W-15-3, 9, 12
Instrument Cluster	8W-15-18, 22
Left Back-Up Lamp	8W-15-26
Left City Lamp	8W-15-12
Left Cylinder Lock Switch	8W-15-19
Left Door Lock Switch	8W-15-19
Left Fog Lamp	8W-15-12
Left Front Park/Turn Signal Lamp	8W-15-12
Left Front Side Marker	8W-15-12
Left Front Turn Signal Lamp	8W-15-12
Left Headlamp Leveling Module	8W-15-12
Left High Beam Headlamp	8W-15-12
Left License Lamp	8W-15-26
Left Low Beam Headlamp	8W-15-12
Left Power Mirror	8W-15-19
Left Rear Fog Lamp	8W-15-26
Left Rear Power Window Switch	8W-15-27
Left Rear Turn Signal Lamp	8W-15-27
Left Tail/Stop Lamp	8W-15-27
Left Turn Signal Indicator	8W-15-24
Left Visor/Vanity Lamp	8W-15-24
License Lamp	8W-15-26
Liftgate Ajar Switch	8W-15-26
Liftgate Cylinder Lock Switch	8W-15-26
Low Note Horn	8W-15-14, 15
Map/Reading Lamps	8W-15-24
Multi-Function Switch	8W-15-18
Natural Vacuum Leak Detection Assembly	8W-15-14
Overhead Console Module	8W-15-18, 24
Oxygen Sensor 1/1 Upstream	8W-15-10, 11
Oxygen Sensor 1/2 Downstream	8W-15-10, 11
Passenger Door Ajar Switch	8W-15-20
Passenger Door Power Lock Motor/Ajar Switch	8W-15-19, 20
Passenger Heated Seat Cushion	8W-15-25
Passenger Heated Seat Switch	8W-15-25
PCV Heater	8W-15-10
Power Mirror Switch	8W-15-22
Power Outlet	8W-15-21
Power Seat Switch	8W-15-25
Power Steering Pressure Switch	8W-15-3, 9, 11, 16
Power Sunroof Module	8W-15-24
Powertrain Control Module	8W-15-4, 5, 6, 17
Radiator Fan Motor	8W-15-17
Radio	8W-15-18
Rear Power Outlet	8W-15-28
Rear Window Defogger Switch	8W-15-21
Rear Window Defogger	8W-15-27
Rear Wiper Motor	8W-15-26
Rear Wiper Switch	8W-15-21
Remote Keyless Entry Module	8W-15-18, 22
Right Back-Up Lamp	8W-15-26
Right City Lamp	8W-15-13, 15
Right Cylinder Lock Switch	8W-15-20
Right Door Lock Switch	8W-15-20
Right Fog Lamp	8W-15-13, 15
Right Front Park/Turn Signal Lamp	8W-15-13
Right Front Side Marker	8W-15-13, 15
Right Front Turn Signal Lamp	8W-15-13, 15
Right Headlamp Leveling Module	8W-15-13, 15
Right High Beam Headlamp	8W-15-13, 15
Right Low Beam Headlamp	8W-15-13, 15
Right Power Mirror	8W-15-20
Right Rear Fog Lamp	8W-15-26
Right Rear Power Window Switch	8W-15-28
Right Rear Turn Signal Lamp	8W-15-28
Right Tail/Stop Lamp	8W-15-28
Right Turn Signal Indicator	8W-15-24
Right Visor/Vanity Lamp	8W-15-24
Sentry Key Immobilizer Module	8W-15-18
Siren	8W-15-10
Speed Control Servo	8W-15-14, 15
Traction Control Switch	8W-15-21
Transmission Control Relay	8W-15-10, 11
Transmission Range Indicator Illumination	8W-15-23
Wastegate Solenoid	8W-15-12

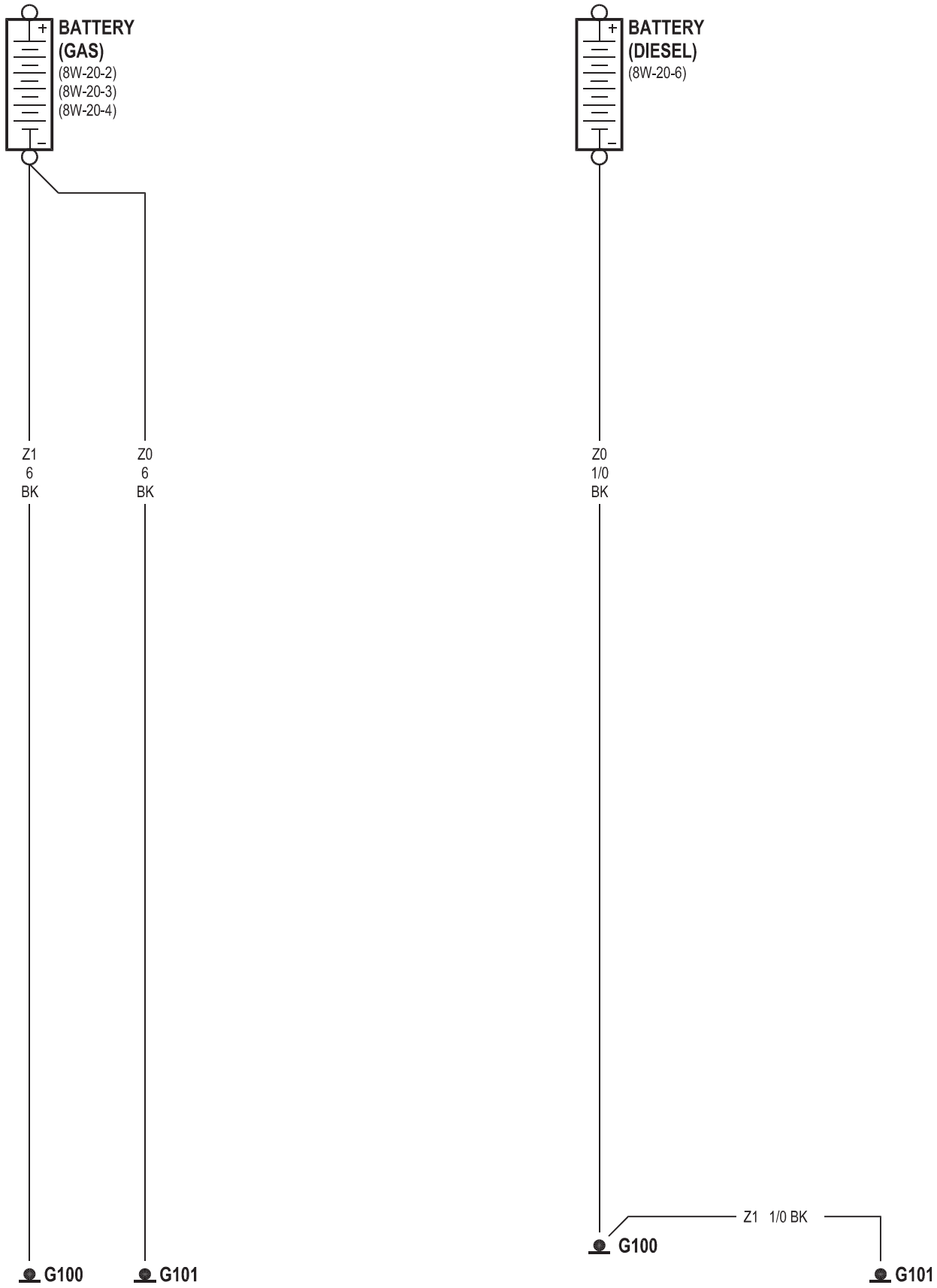
BATTERY
(GAS)
(8W-20-2)
(8W-20-3)
(8W-20-4)
+
–
Z1
6
BK
Z0
6
BK
G100
G101
BATTERY
(DIESEL)
(8W-20-6)
+
–
Z0
1/0
BK
Z1 1/0 BK
G100
G101

1.6L

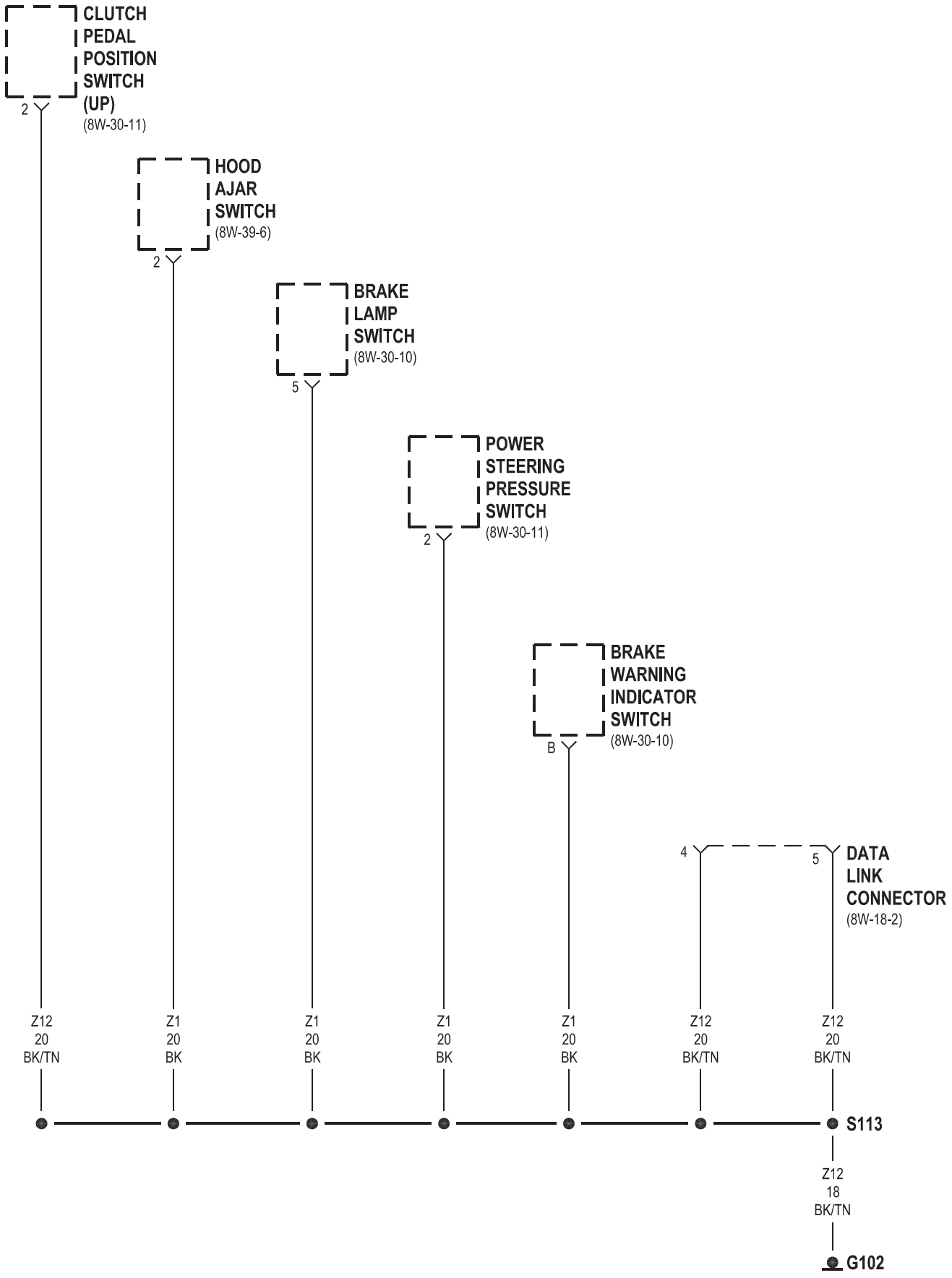
CLUTCH PEDAL POSITION SWITCH (UP)
(8W-30-11)
2
HOOD AJAR SWITCH
(8W-39-6)
2
BRAKE LAMP SWITCH
(8W-30-10)
5
POWER STEERING PRESSURE SWITCH
(8W-30-11)
2
BRAKE WARNING INDICATOR SWITCH
(8W-30-10)
B
4
5
DATA LINK CONNECTOR
(8W-18-2)
Z12 20 BK/TN
Z1 20 BK
Z1 20 BK
Z1 20 BK
Z1 20 BK
Z12 20 BK/TN
Z12 20 BK/TN
S113
Z12 18 BK/TN
G102

GAS LHD EXCEPT 1.6L

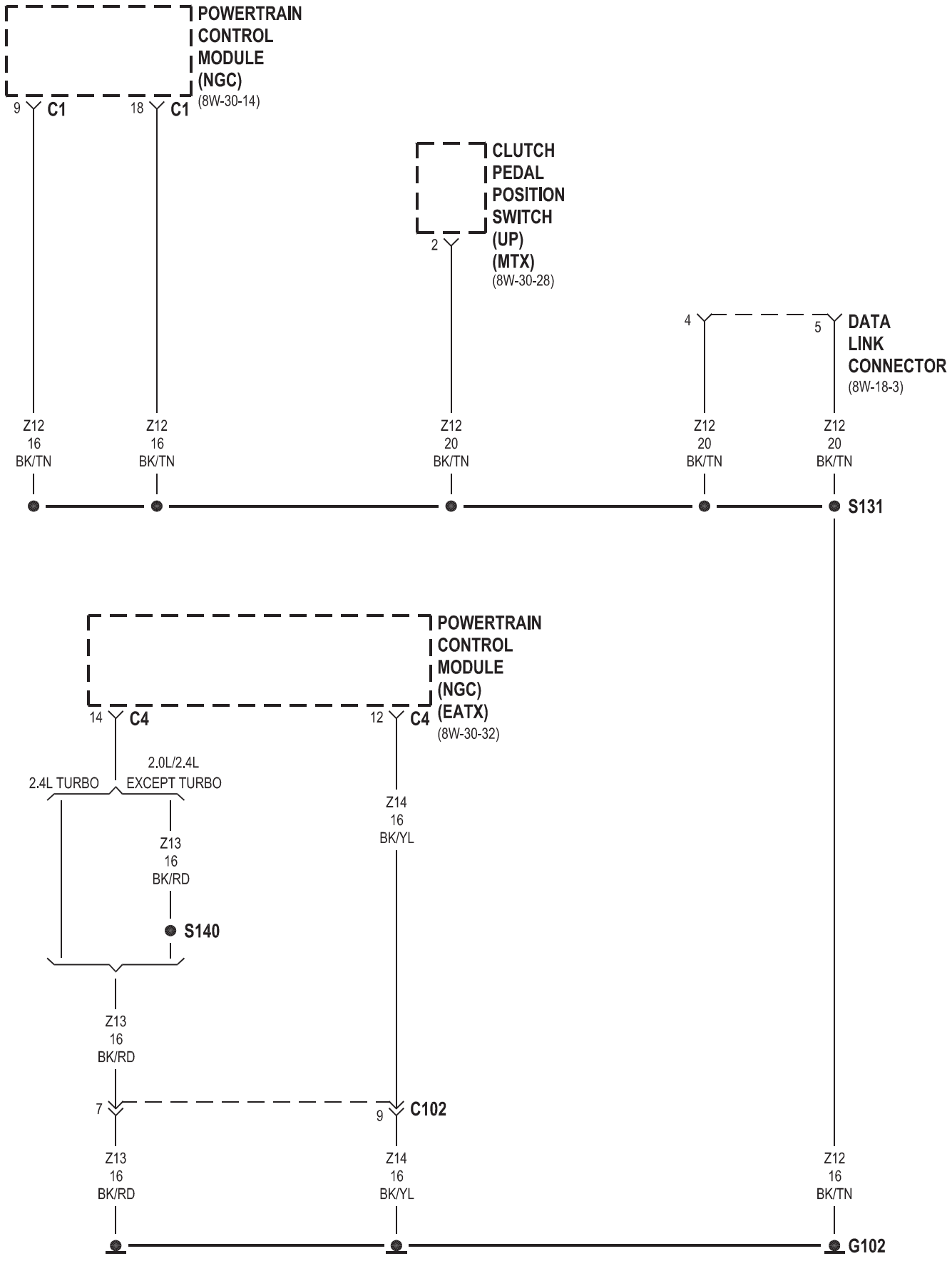

GAS RHD MTX

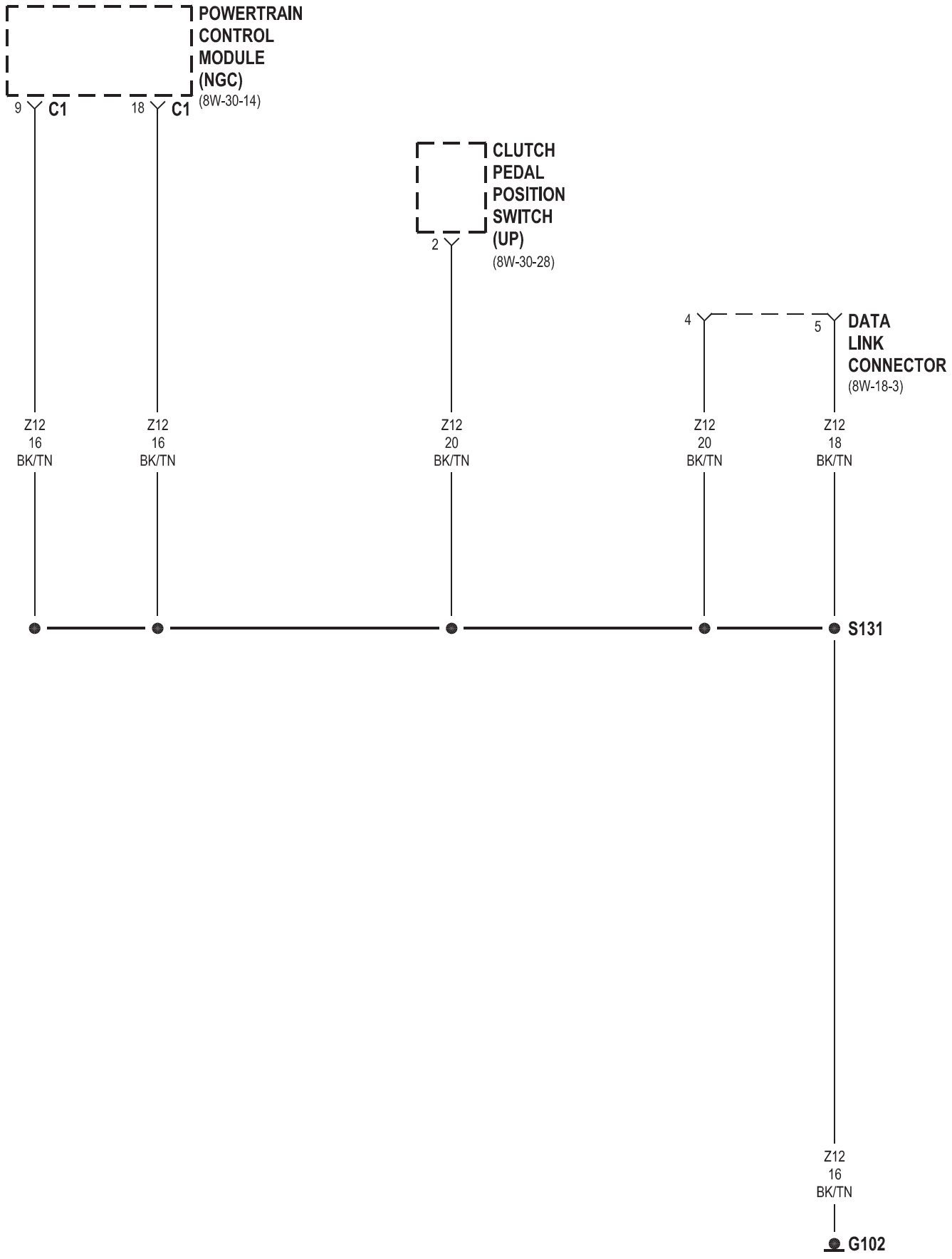
POWERTRAIN
CONTROL
MODULE
(NGC)
(8W-30-14)
9
C1
18
C1
CLUTCH
PEDAL
POSITION
SWITCH
(UP)
(8W-30-28)
2
4
5
DATA
LINK
CONNECTOR
(8W-18-3)
Z12
16
BK/TN
Z12
16
BK/TN
Z12
20
BK/TN
Z12
20
BK/TN
Z12
18
BK/TN
S131
Z12
16
BK/TN
G102

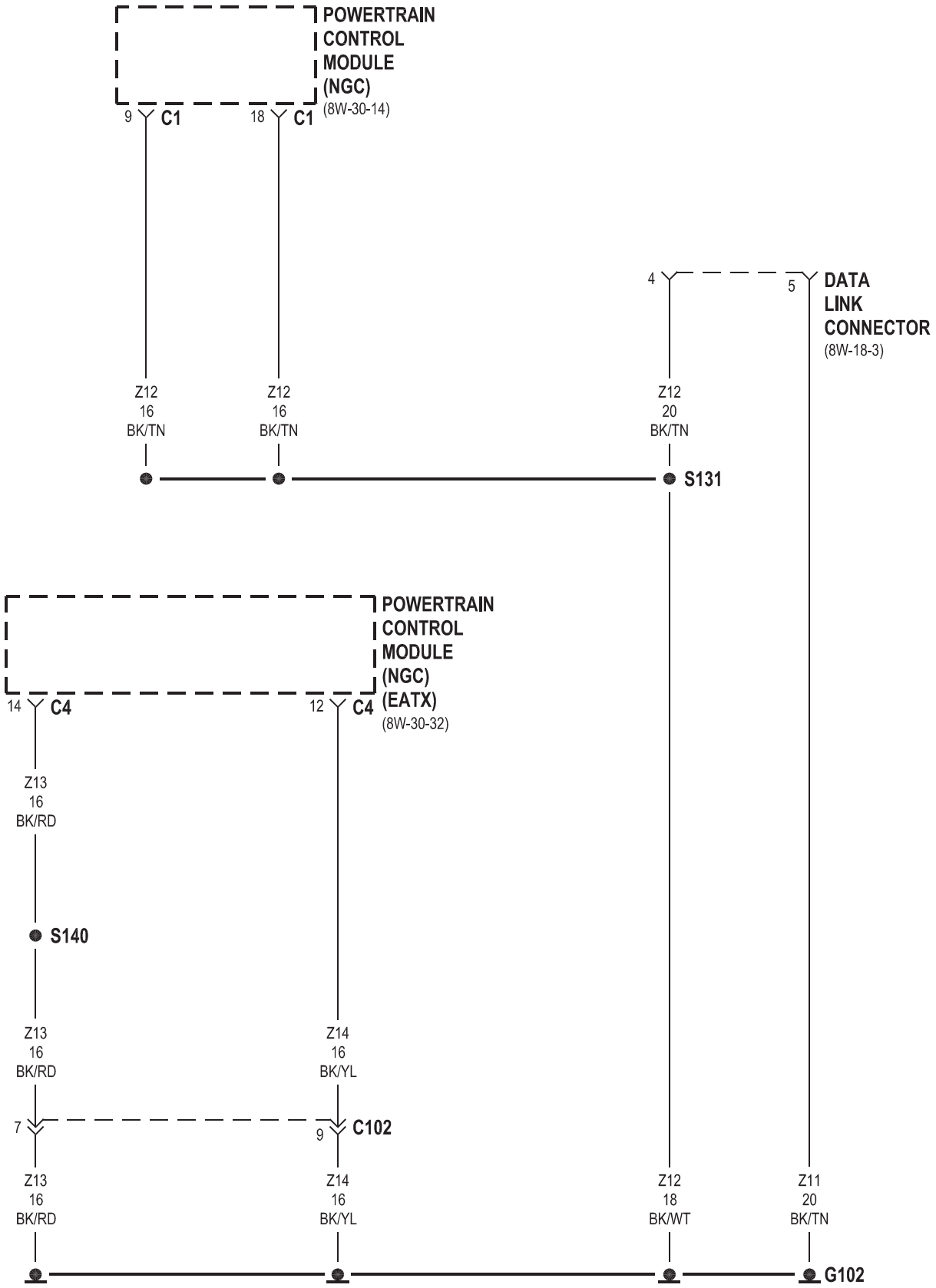
POWERTRAIN
CONTROL
MODULE
(NGC)
(8W-30-14)
9 C1
18 C1
4
5
DATA
LINK
CONNECTOR
(8W-18-3)
Z12
16
BK/TN
Z12
16
BK/TN
Z12
20
BK/TN
S131
POWERTRAIN
CONTROL
MODULE
(NGC)
(EATX)
(8W-30-32)
14 C4
12 C4
Z13
16
BK/RD
S140
Z13
16
BK/RD
Z14
16
BK/YL
7
9 C102
Z13
16
BK/RD
Z14
16
BK/YL
Z12
18
BK/WT
Z11
20
BK/TN
G102

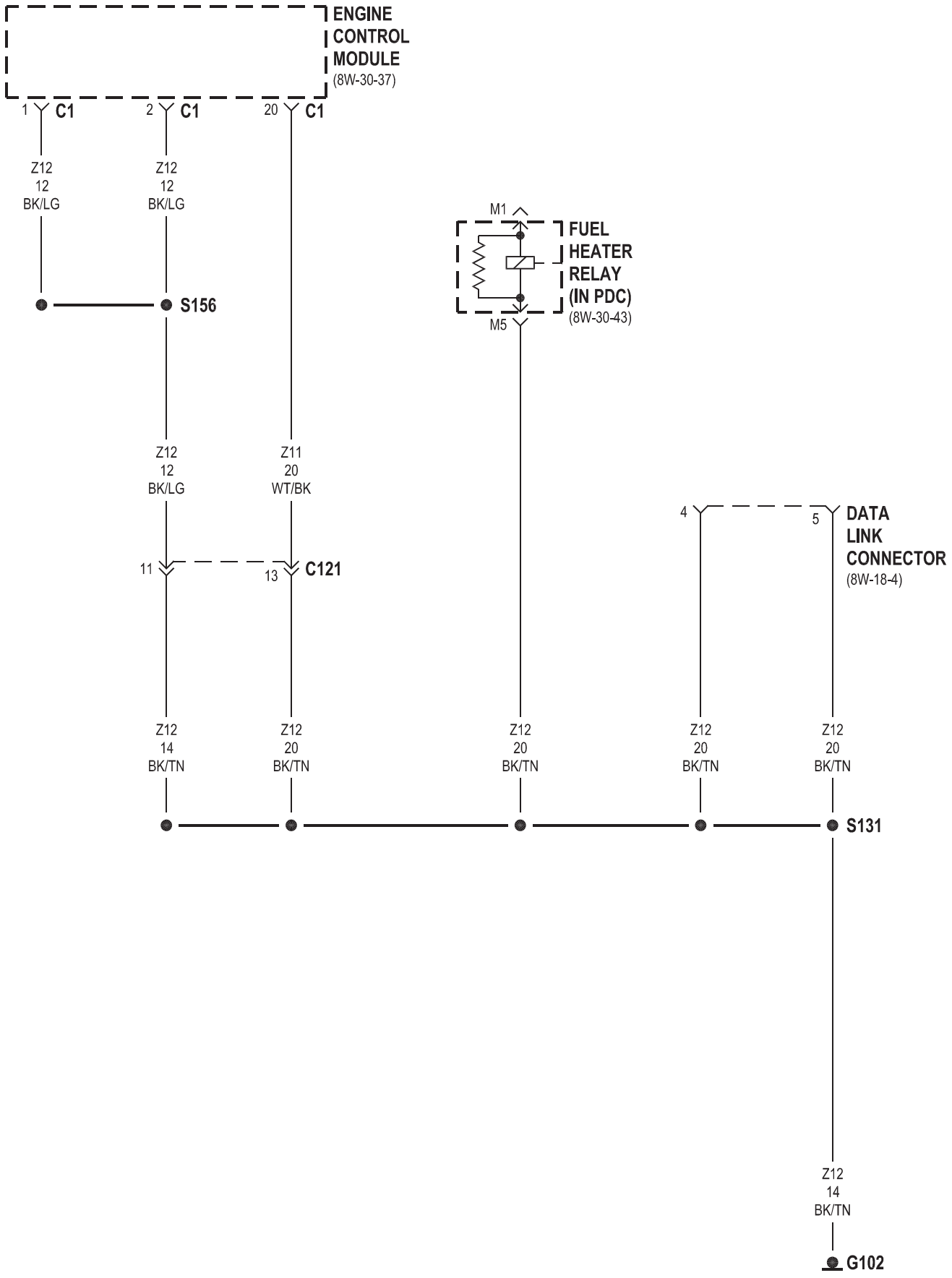
ENGINE CONTROL MODULE
(8W-30-37)
1 C1
2 C1
20 C1
Z12 12 BK/LG
Z12 12 BK/LG
S156
M1
FUEL HEATER RELAY (IN PDC)
(8W-30-43)
M5
Z12 12 BK/LG
Z11 20 WT/BK
11
13 C121
4
5
DATA LINK CONNECTOR
(8W-18-4)
Z12 14 BK/TN
Z12 20 BK/TN
Z12 20 BK/TN
Z12 20 BK/TN
Z12 20 BK/TN
S131
Z12 14 BK/TN
G102

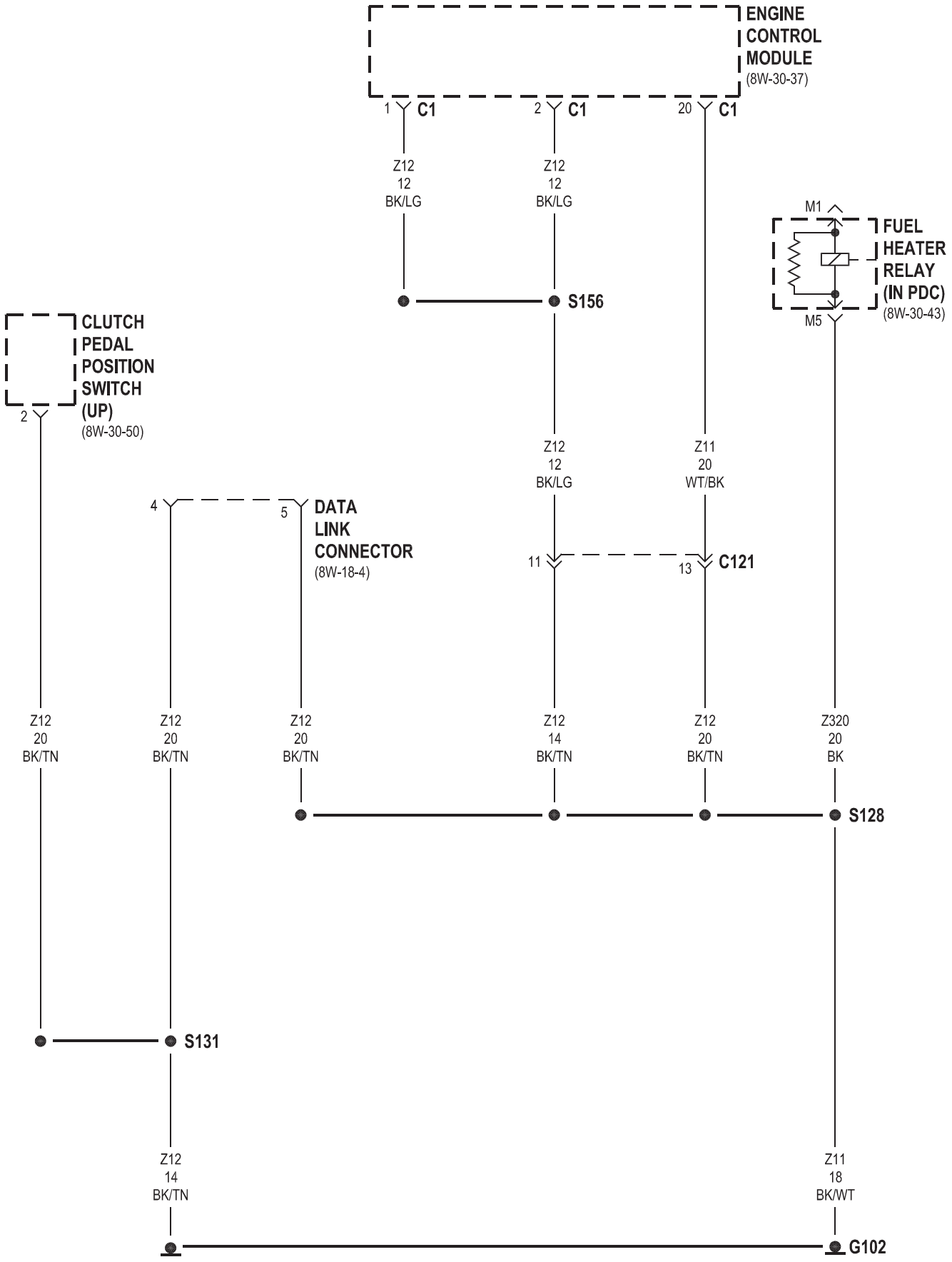
ENGINE CONTROL MODULE
(8W-30-37)
1 C1
2 C1
20 C1
Z12 12 BK/LG
Z12 12 BK/LG
S156
M1
FUEL HEATER RELAY (IN PDC)
(8W-30-43)
M5
CLUTCH PEDAL POSITION SWITCH (UP)
(8W-30-50)
2
Z12 12 BK/LG
Z11 20 WT/BK
4
5
DATA LINK CONNECTOR
(8W-18-4)
11
13
C121
Z12 20 BK/TN
Z12 20 BK/TN
Z12 20 BK/TN
Z12 14 BK/TN
Z12 20 BK/TN
Z320 20 BK
S128
S131
Z12 14 BK/TN
Z11 18 BK/WT
G102

LHD EXCEPT 1.6L

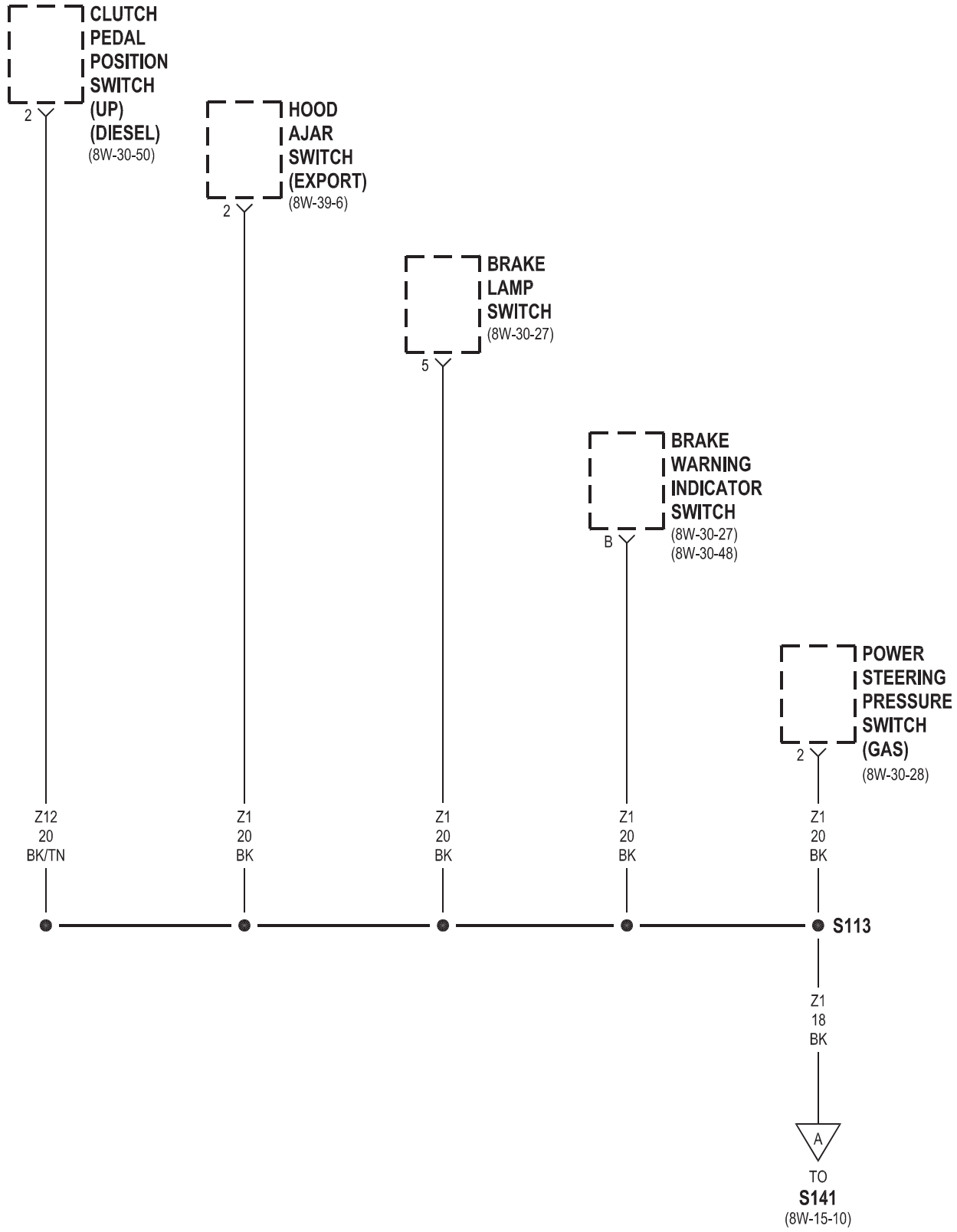

EXCEPT 2.4L TURBO

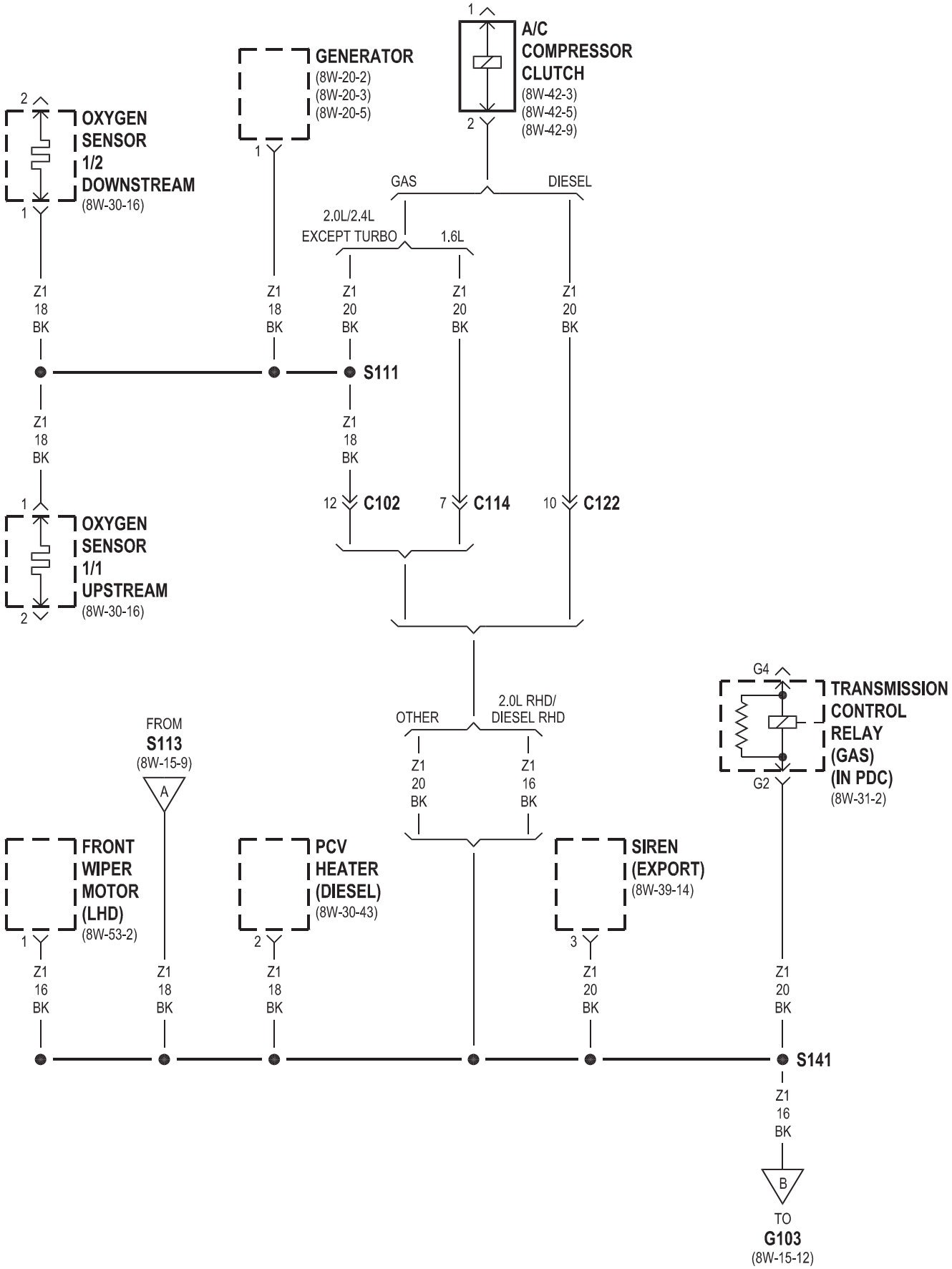

2.4L TURBO

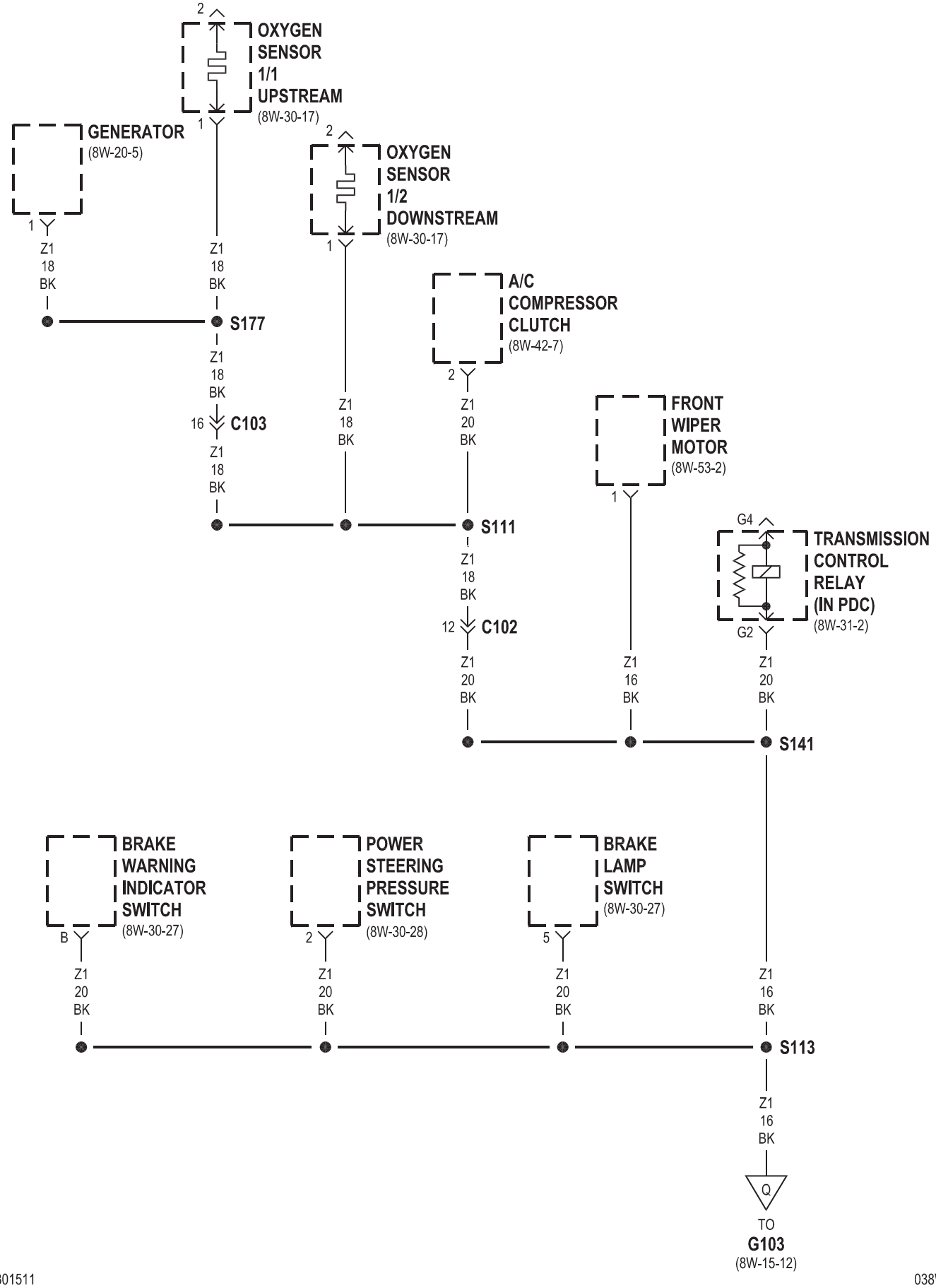
OXYGEN SENSOR 1/1 UPSTREAM
(8W-30-17)
GENERATOR
(8W-20-5)
OXYGEN SENSOR 1/2 DOWNSTREAM
(8W-30-17)
A/C COMPRESSOR CLUTCH
(8W-42-7)
FRONT WIPER MOTOR
(8W-53-2)
TRANSMISSION CONTROL RELAY (IN PDC)
(8W-31-2)
Z1 18 BK
S177
C103
S111
C102
Z1 20 BK
Z1 16 BK
S141
BRAKE WARNING INDICATOR SWITCH
(8W-30-27)
POWER STEERING PRESSURE SWITCH
(8W-30-28)
BRAKE LAMP SWITCH
(8W-30-27)
S113
TO
G103
(8W-15-12)

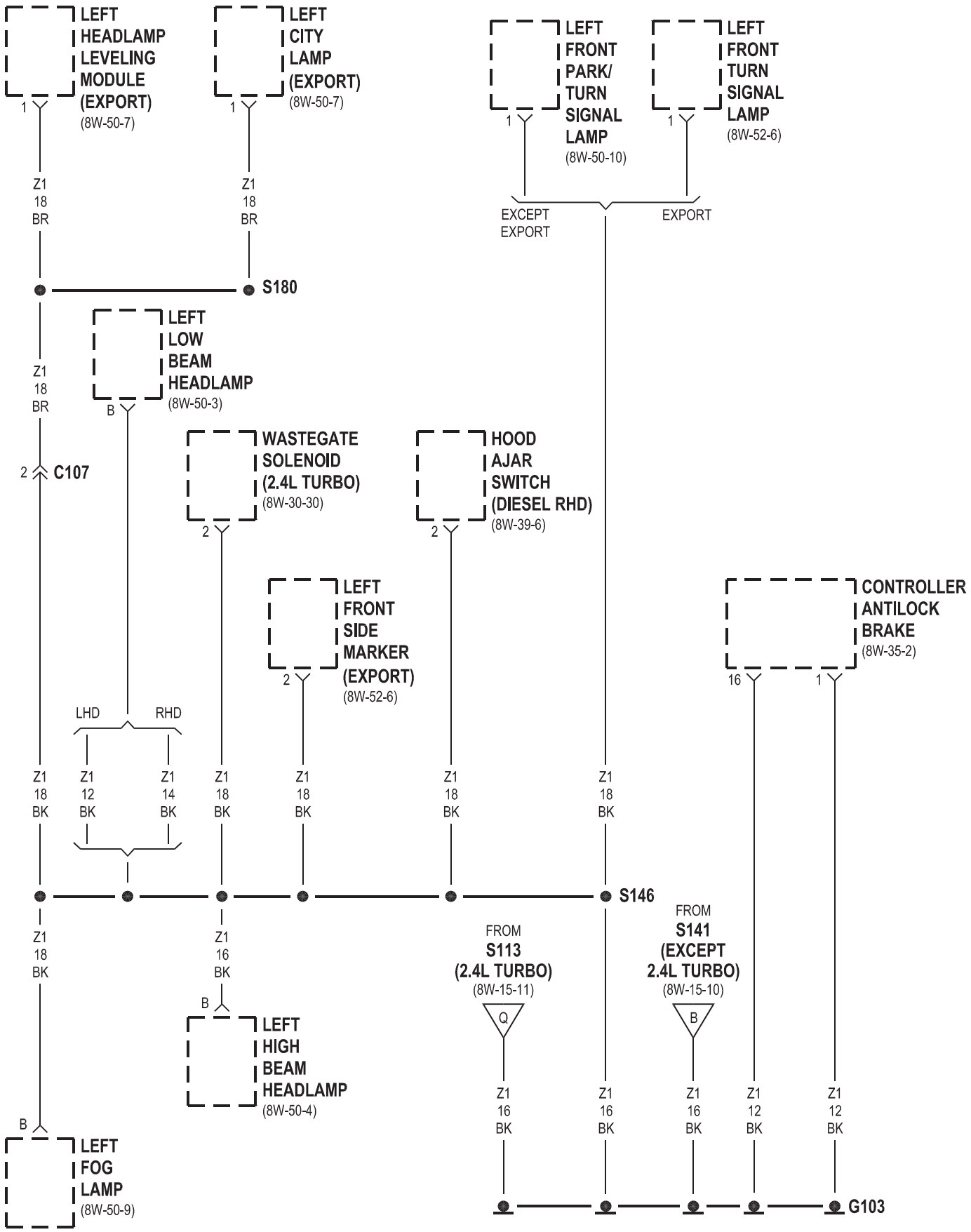
LEFT HEADLAMP LEVELING MODULE (EXPORT)
(8W-50-7)
LEFT CITY LAMP (EXPORT)
(8W-50-7)
LEFT FRONT PARK/ TURN SIGNAL LAMP
(8W-50-10)
LEFT FRONT TURN SIGNAL LAMP
(8W-52-6)
EXCEPT EXPORT
EXPORT
Z1 18 BR
S180
LEFT LOW BEAM HEADLAMP
(8W-50-3)
C107
WASTEGATE SOLENOID (2.4L TURBO)
(8W-30-30)
HOOD AJAR SWITCH (DIESEL RHD)
(8W-39-6)
LEFT FRONT SIDE MARKER (EXPORT)
(8W-52-6)
CONTROLLER ANTILOCK BRAKE
(8W-35-2)
LHD
RHD
Z1 18 BK
Z1 12 BK
Z1 14 BK
S146
Z1 16 BK
FROM S113 (2.4L TURBO)
(8W-15-11)
FROM S141 (EXCEPT 2.4L TURBO)
(8W-15-10)
LEFT HIGH BEAM HEADLAMP
(8W-50-4)
LEFT FOG LAMP
(8W-50-9)
G103

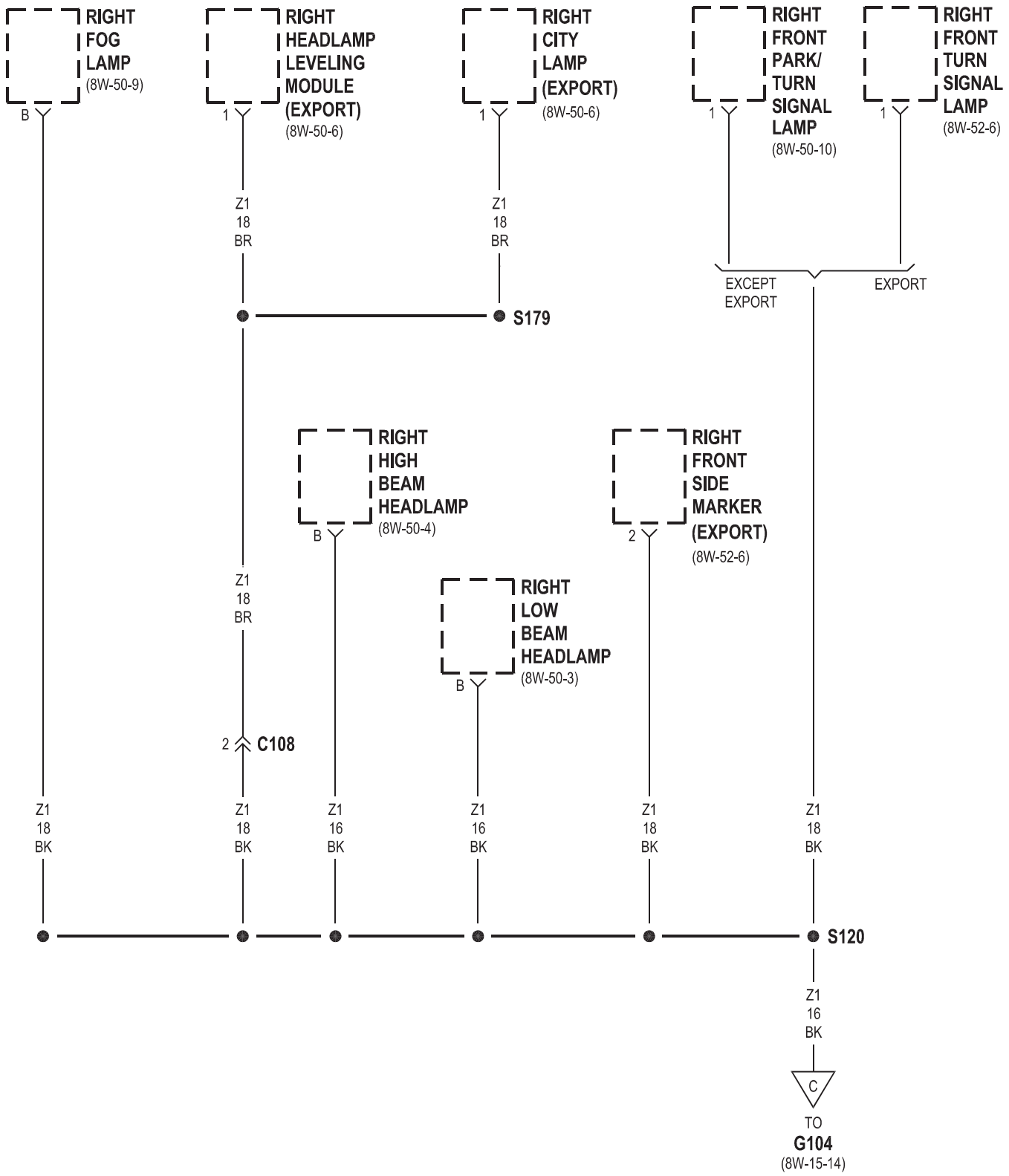
RIGHT FOG LAMP (8W-50-9)
B
RIGHT HEADLAMP LEVELING MODULE (EXPORT) (8W-50-6)
1
RIGHT CITY LAMP (EXPORT) (8W-50-6)
1
RIGHT FRONT PARK/ TURN SIGNAL LAMP (8W-50-10)
1
RIGHT FRONT TURN SIGNAL LAMP (8W-52-6)
1
Z1 18 BR
Z1 18 BR
EXCEPT EXPORT
EXPORT
S179
RIGHT HIGH BEAM HEADLAMP (8W-50-4)
B
RIGHT FRONT SIDE MARKER (EXPORT) (8W-52-6)
2
Z1 18 BR
RIGHT LOW BEAM HEADLAMP (8W-50-3)
B
2
C108
Z1 18 BK
Z1 18 BK
Z1 16 BK
Z1 16 BK
Z1 18 BK
Z1 18 BK
S120
Z1 16 BK
C
TO
G104
(8W-15-14)

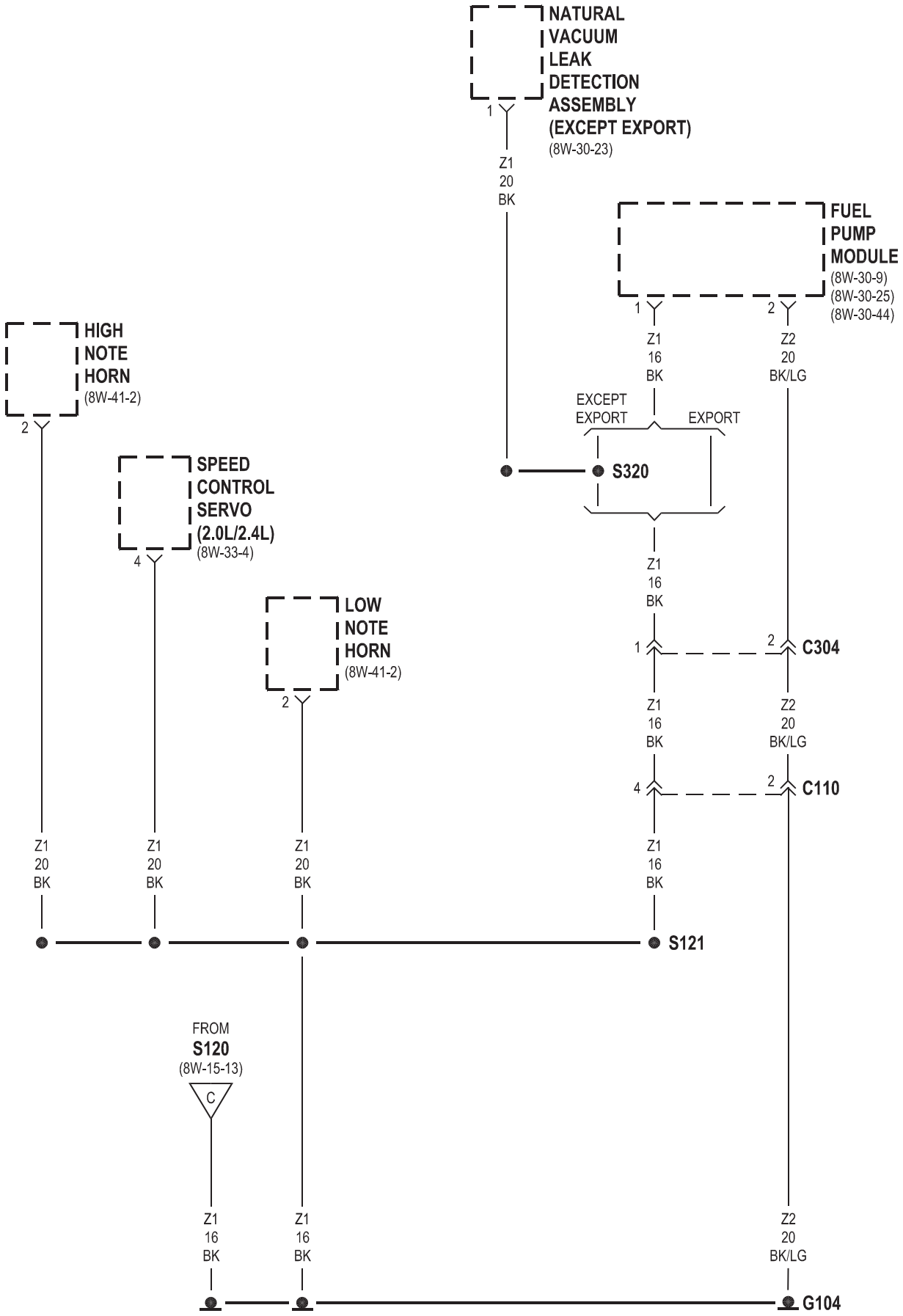
NATURAL VACUUM LEAK DETECTION ASSEMBLY (EXCEPT EXPORT)
(8W-30-23)
1
Z1 20 BK
FUEL PUMP MODULE
(8W-30-9)
(8W-30-25)
(8W-30-44)
1
2
Z1 16 BK
Z2 20 BK/LG
HIGH NOTE HORN
(8W-41-2)
2
EXCEPT EXPORT
EXPORT
S320
SPEED CONTROL SERVO (2.0L/2.4L)
(8W-33-4)
4
Z1 16 BK
LOW NOTE HORN
(8W-41-2)
2
1
2
C304
Z1 16 BK
Z2 20 BK/LG
4
2
C110
Z1 20 BK
Z1 20 BK
Z1 20 BK
Z1 16 BK
S121
FROM
S120
(8W-15-13)
C
Z1 16 BK
Z1 16 BK
Z2 20 BK/LG
G104

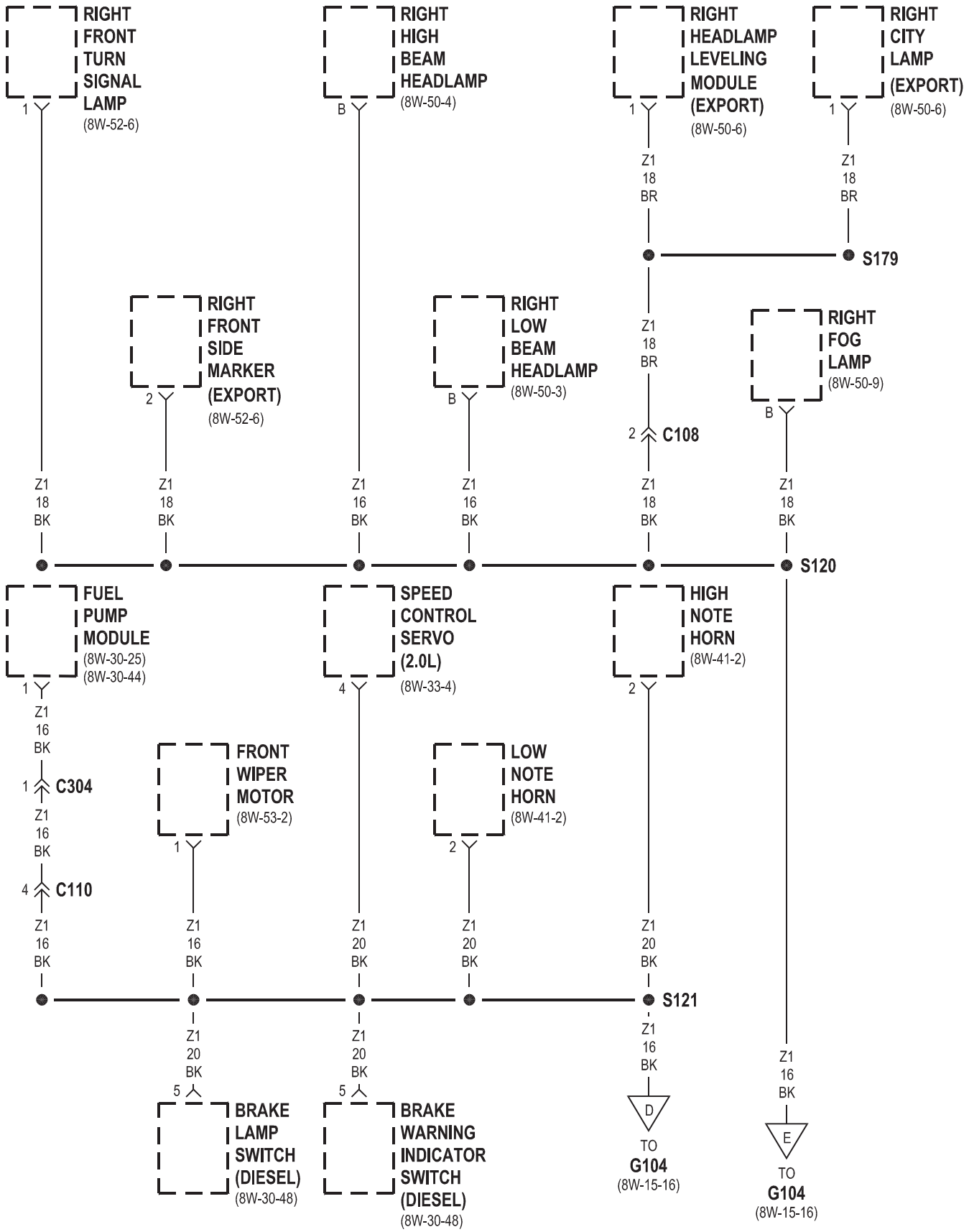
RIGHT FRONT TURN SIGNAL LAMP (8W-52-6)
1
RIGHT HIGH BEAM HEADLAMP (8W-50-4)
B
RIGHT HEADLAMP LEVELING MODULE (EXPORT) (8W-50-6)
1
RIGHT CITY LAMP (EXPORT) (8W-50-6)
1
Z1 18 BR
Z1 18 BR
S179
RIGHT FRONT SIDE MARKER (EXPORT) (8W-52-6)
2
RIGHT LOW BEAM HEADLAMP (8W-50-3)
B
Z1 18 BR
RIGHT FOG LAMP (8W-50-9)
B
2 C108
Z1 18 BK
Z1 18 BK
Z1 16 BK
Z1 16 BK
Z1 18 BK
Z1 18 BK
S120
FUEL PUMP MODULE (8W-30-25) (8W-30-44)
1
SPEED CONTROL SERVO (2.0L) (8W-33-4)
4
HIGH NOTE HORN (8W-41-2)
2
Z1 16 BK
1 C304
Z1 16 BK
4 C110
FRONT WIPER MOTOR (8W-53-2)
1
LOW NOTE HORN (8W-41-2)
2
Z1 16 BK
Z1 16 BK
Z1 20 BK
Z1 20 BK
Z1 20 BK
S121
Z1 20 BK
5
Z1 20 BK
5
Z1 16 BK
Z1 16 BK
BRAKE LAMP SWITCH (DIESEL) (8W-30-48)
BRAKE WARNING INDICATOR SWITCH (DIESEL) (8W-30-48)
D
TO G104 (8W-15-16)
E
TO G104 (8W-15-16)

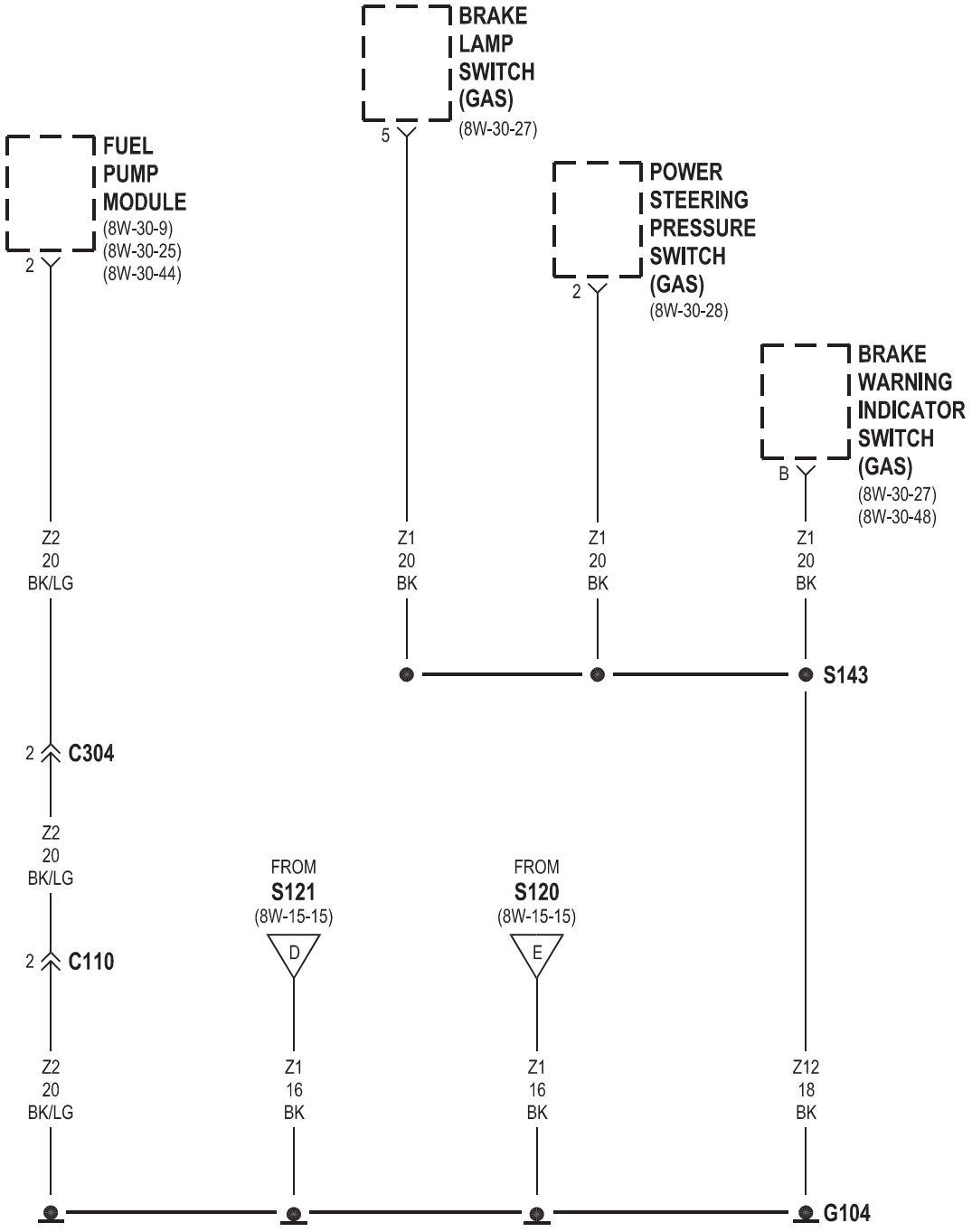
BRAKE LAMP SWITCH (GAS)
(8W-30-27)
5
FUEL PUMP MODULE
(8W-30-9)
(8W-30-25)
(8W-30-44)
2
POWER STEERING PRESSURE SWITCH (GAS)
(8W-30-28)
2
BRAKE WARNING INDICATOR SWITCH (GAS)
(8W-30-27)
(8W-30-48)
B
Z2 20 BK/LG
Z1 20 BK
Z1 20 BK
Z1 20 BK
S143
2 C304
Z2 20 BK/LG
2 C110
FROM S121 (8W-15-15)
D
FROM S120 (8W-15-15)
E
Z2 20 BK/LG
Z1 16 BK
Z1 16 BK
Z12 18 BK
G104

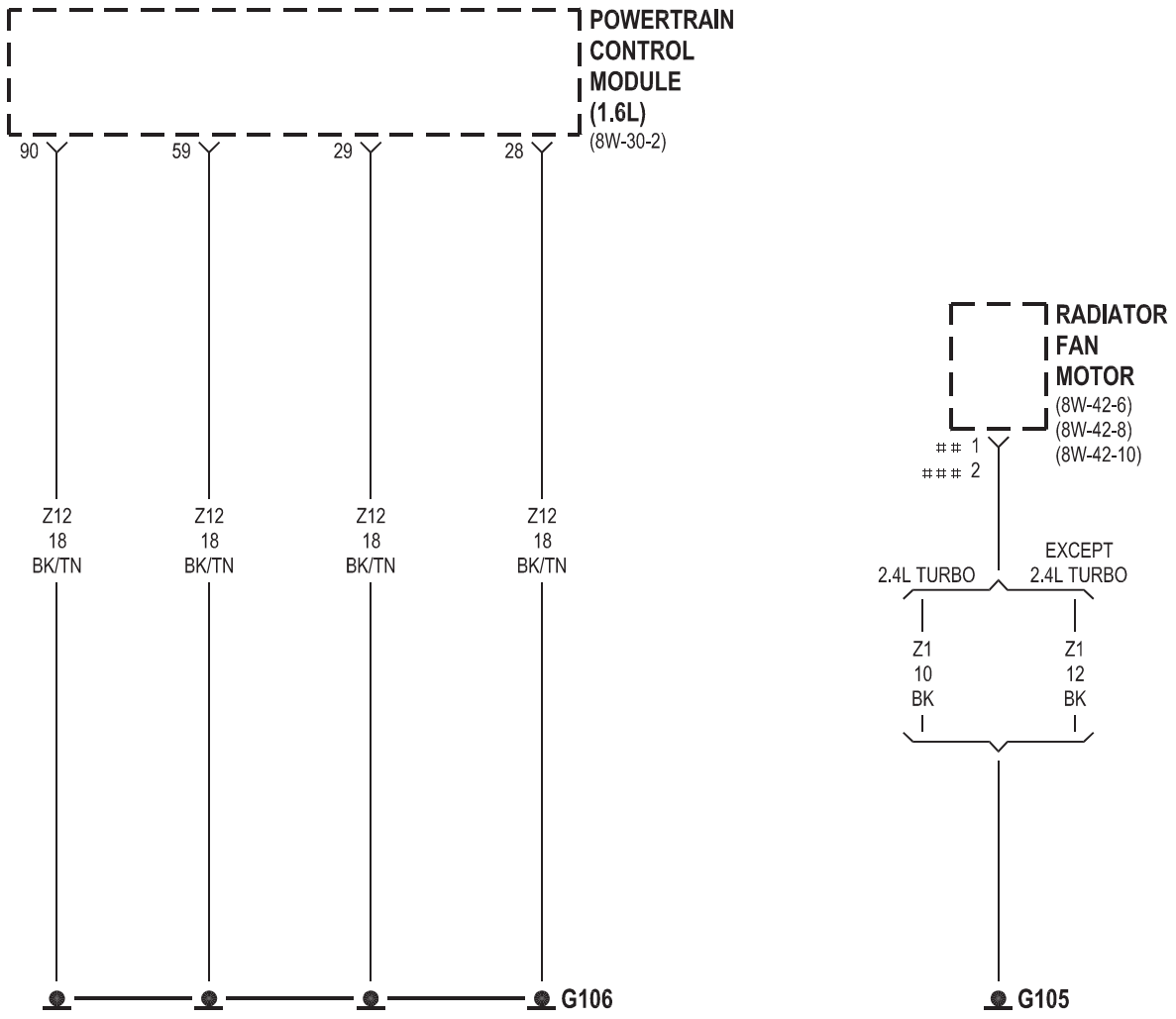

2.4L TURBO
EXCEPT 2.4L TURBO

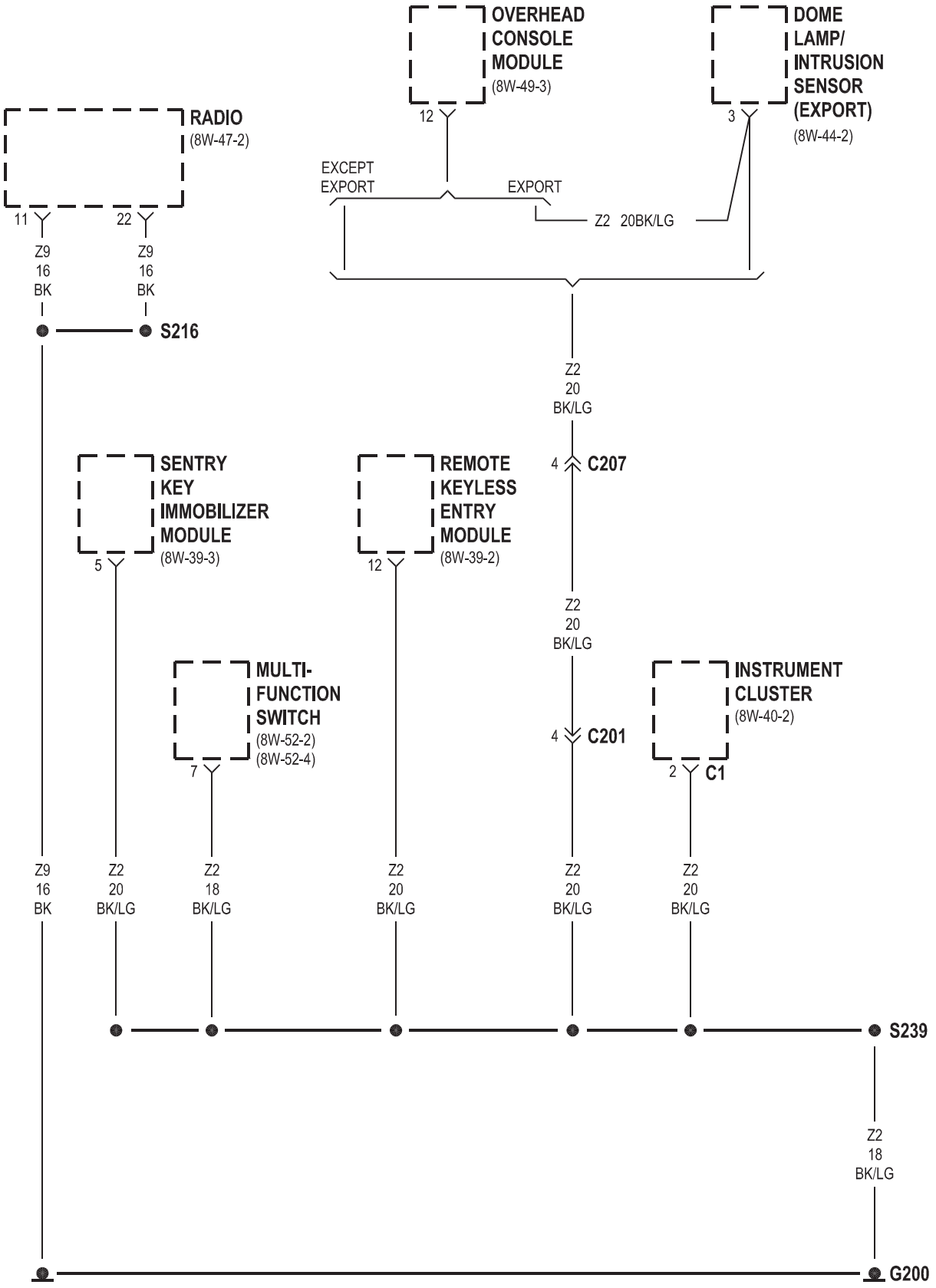
OVERHEAD CONSOLE MODULE
(8W-49-3)
12
DOME LAMP/ INTRUSION SENSOR (EXPORT)
(8W-44-2)
3
RADIO
(8W-47-2)
11
22
EXCEPT EXPORT
EXPORT
Z2 20BK/LG
Z9 16 BK
Z9 16 BK
S216
Z2 20 BK/LG
4
C207
SENTRY KEY IMMOBILIZER MODULE
(8W-39-3)
5
REMOTE KEYLESS ENTRY MODULE
(8W-39-2)
12
Z2 20 BK/LG
MULTI-FUNCTION SWITCH
(8W-52-2)
(8W-52-4)
7
4
C201
INSTRUMENT CLUSTER
(8W-40-2)
2
C1
Z9 16 BK
Z2 20 BK/LG
Z2 18 BK/LG
Z2 20 BK/LG
Z2 20 BK/LG
Z2 20 BK/LG
S239
Z2 18 BK/LG
G200

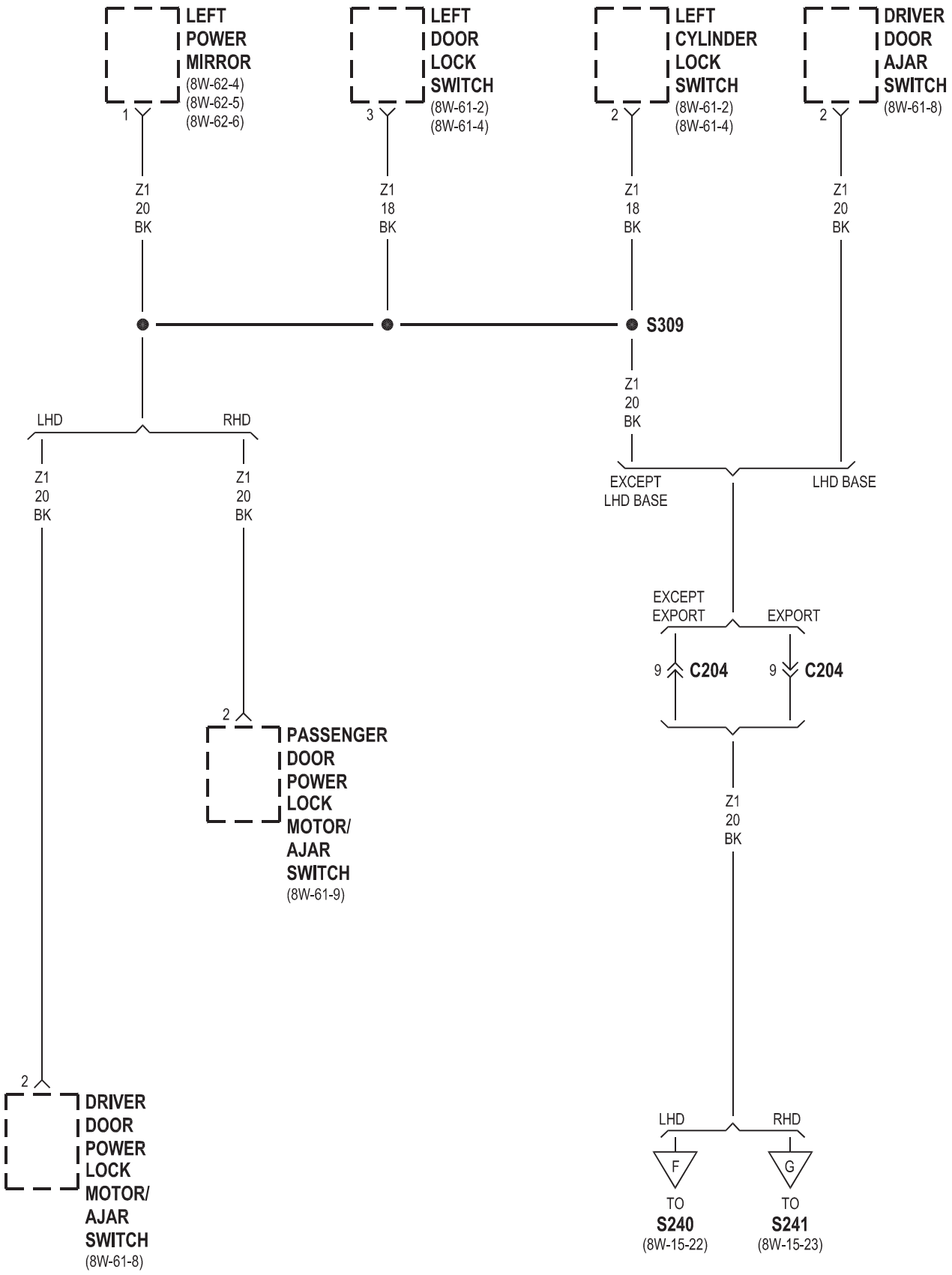
LEFT POWER MIRROR (8W-62-4) (8W-62-5) (8W-62-6)
1
LEFT DOOR LOCK SWITCH (8W-61-2) (8W-61-4)
3
LEFT CYLINDER LOCK SWITCH (8W-61-2) (8W-61-4)
2
DRIVER DOOR AJAR SWITCH (8W-61-8)
2
Z1 20 BK
Z1 18 BK
Z1 18 BK
Z1 20 BK
S309
Z1 20 BK
LHD
RHD
Z1 20 BK
Z1 20 BK
EXCEPT LHD BASE
LHD BASE
EXCEPT EXPORT
EXPORT
9 C204
9 C204
2
PASSENGER DOOR POWER LOCK MOTOR/ AJAR SWITCH (8W-61-9)
Z1 20 BK
2
DRIVER DOOR POWER LOCK MOTOR/ AJAR SWITCH (8W-61-8)
LHD
RHD
F
G
TO S240 (8W-15-22)
TO S241 (8W-15-23)

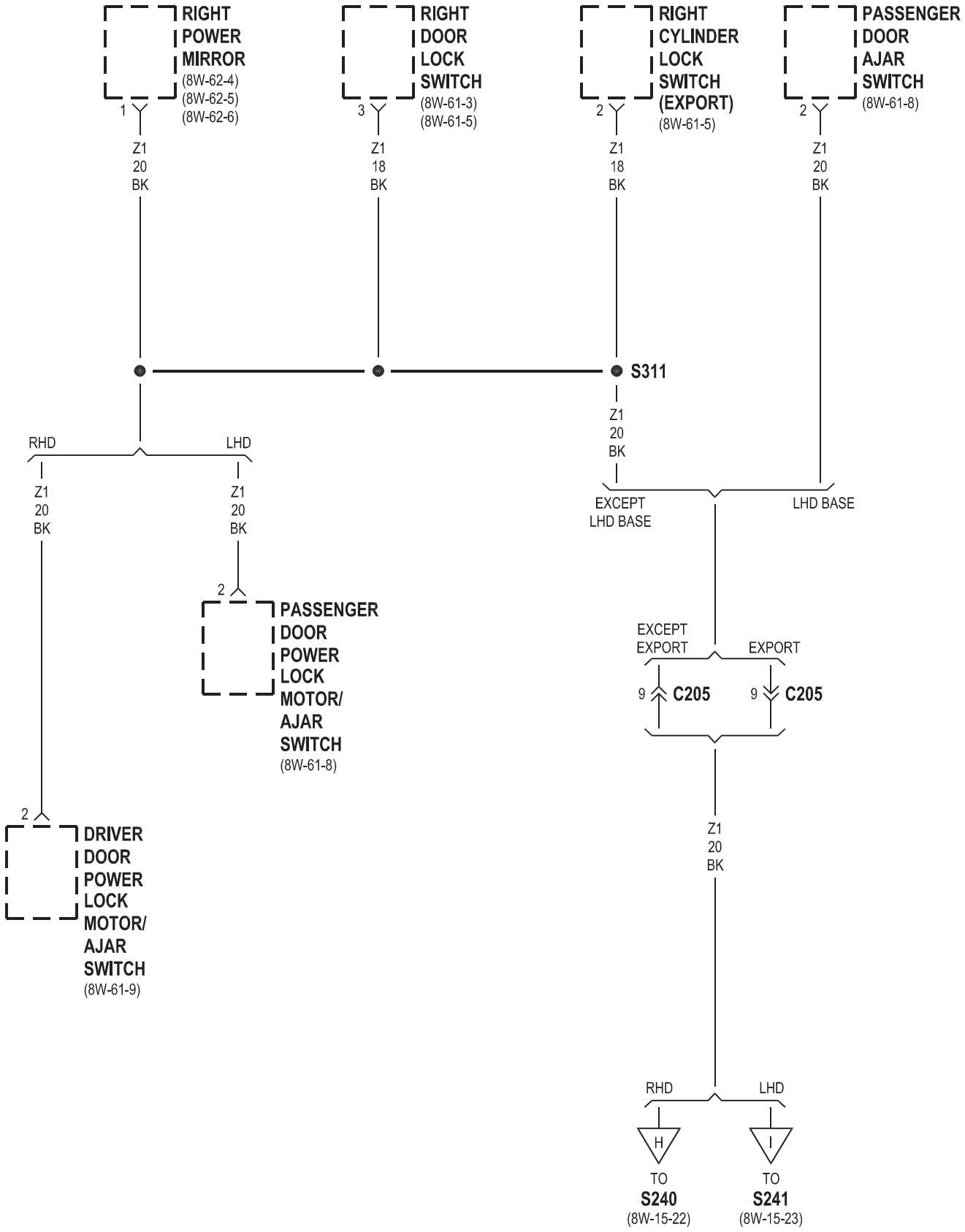
RIGHT POWER MIRROR
(8W-62-4)
(8W-62-5)
(8W-62-6)
1
Z1 20 BK
RIGHT DOOR LOCK SWITCH
(8W-61-3)
(8W-61-5)
3
Z1 18 BK
RIGHT CYLINDER LOCK SWITCH (EXPORT)
(8W-61-5)
2
Z1 18 BK
PASSENGER DOOR AJAR SWITCH
(8W-61-8)
2
Z1 20 BK
S311
Z1 20 BK
EXCEPT LHD BASE
LHD BASE
RHD
LHD
Z1 20 BK
Z1 20 BK
2
PASSENGER DOOR POWER LOCK MOTOR/ AJAR SWITCH
(8W-61-8)
2
DRIVER DOOR POWER LOCK MOTOR/ AJAR SWITCH
(8W-61-9)
EXCEPT EXPORT
EXPORT
9 C205
9 C205
Z1 20 BK
RHD
LHD
H
I
TO S240
(8W-15-22)
TO S241
(8W-15-23)

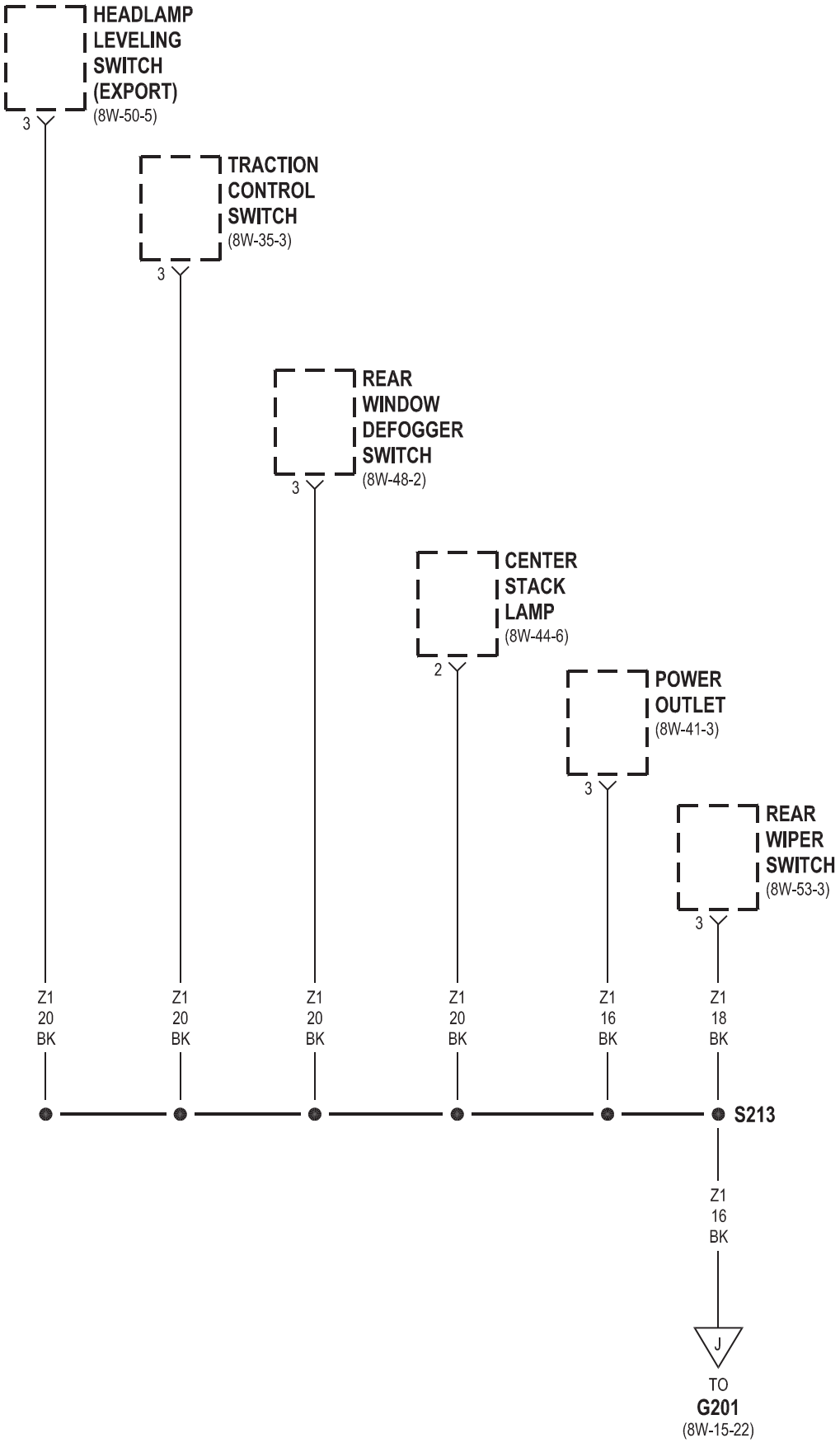
HEADLAMP LEVELING SWITCH (EXPORT)
(8W-50-5)
3
TRACTION CONTROL SWITCH
(8W-35-3)
3
REAR WINDOW DEFOGGER SWITCH
(8W-48-2)
3
CENTER STACK LAMP
(8W-44-6)
2
POWER OUTLET
(8W-41-3)
3
REAR WIPER SWITCH
(8W-53-3)
3
Z1 20 BK
Z1 20 BK
Z1 20 BK
Z1 20 BK
Z1 16 BK
Z1 18 BK
S213
Z1 16 BK
J
TO
G201
(8W-15-22)

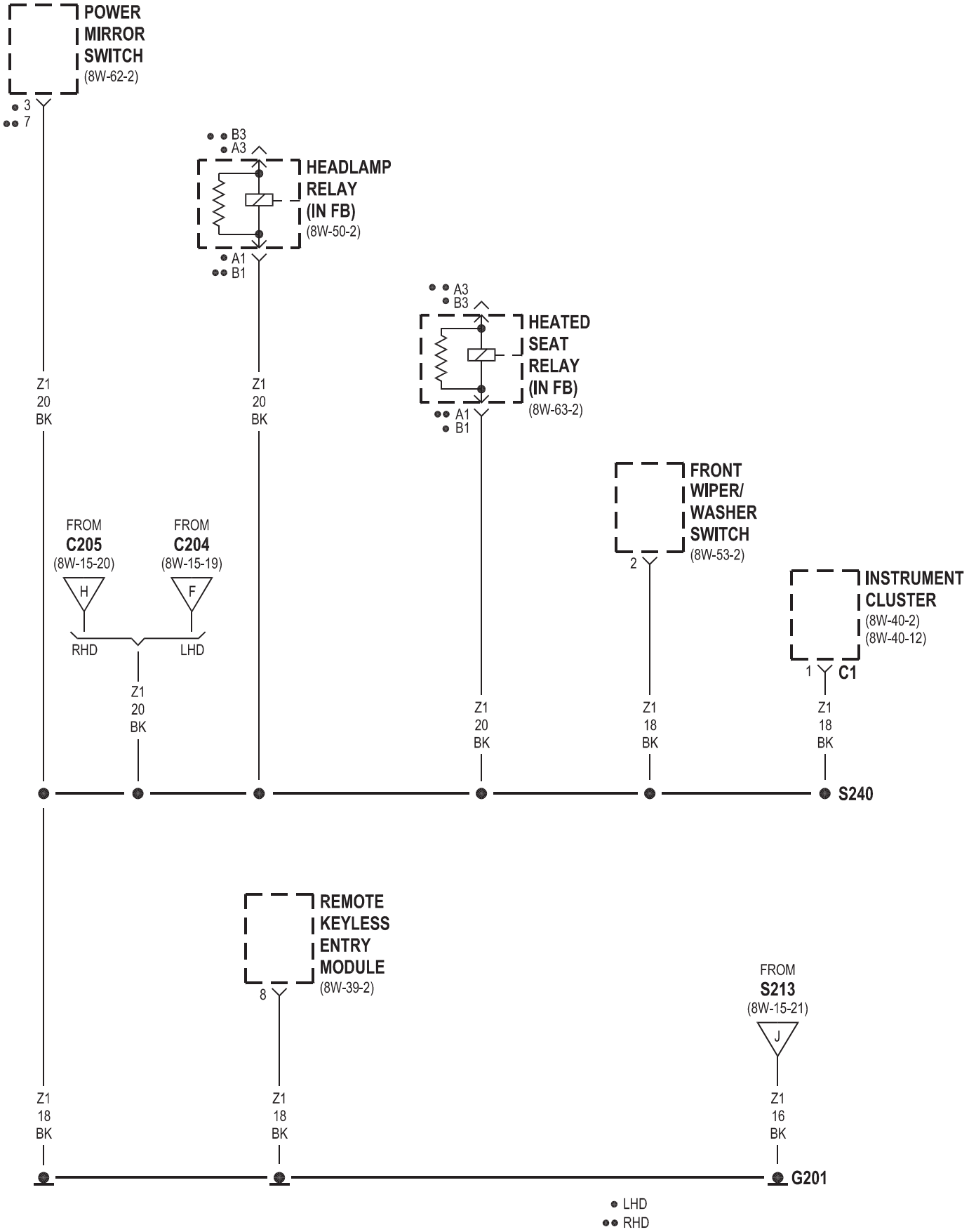
POWER MIRROR SWITCH
(8W-62-2)
3
7
B3
A3
HEADLAMP RELAY (IN FB)
(8W-50-2)
A1
B1
A3
B3
HEATED SEAT RELAY (IN FB)
(8W-63-2)
A1
B1
FRONT WIPER/ WASHER SWITCH
(8W-53-2)
2
INSTRUMENT CLUSTER
(8W-40-2)
(8W-40-12)
1
C1
Z1 20 BK
Z1 20 BK
Z1 20 BK
Z1 18 BK
Z1 18 BK
FROM C205 (8W-15-20)
H
FROM C204 (8W-15-19)
F
RHD
LHD
Z1 20 BK
S240
REMOTE KEYLESS ENTRY MODULE
(8W-39-2)
8
FROM S213 (8W-15-21)
J
Z1 18 BK
Z1 18 BK
Z1 16 BK
G201
LHD
RHD

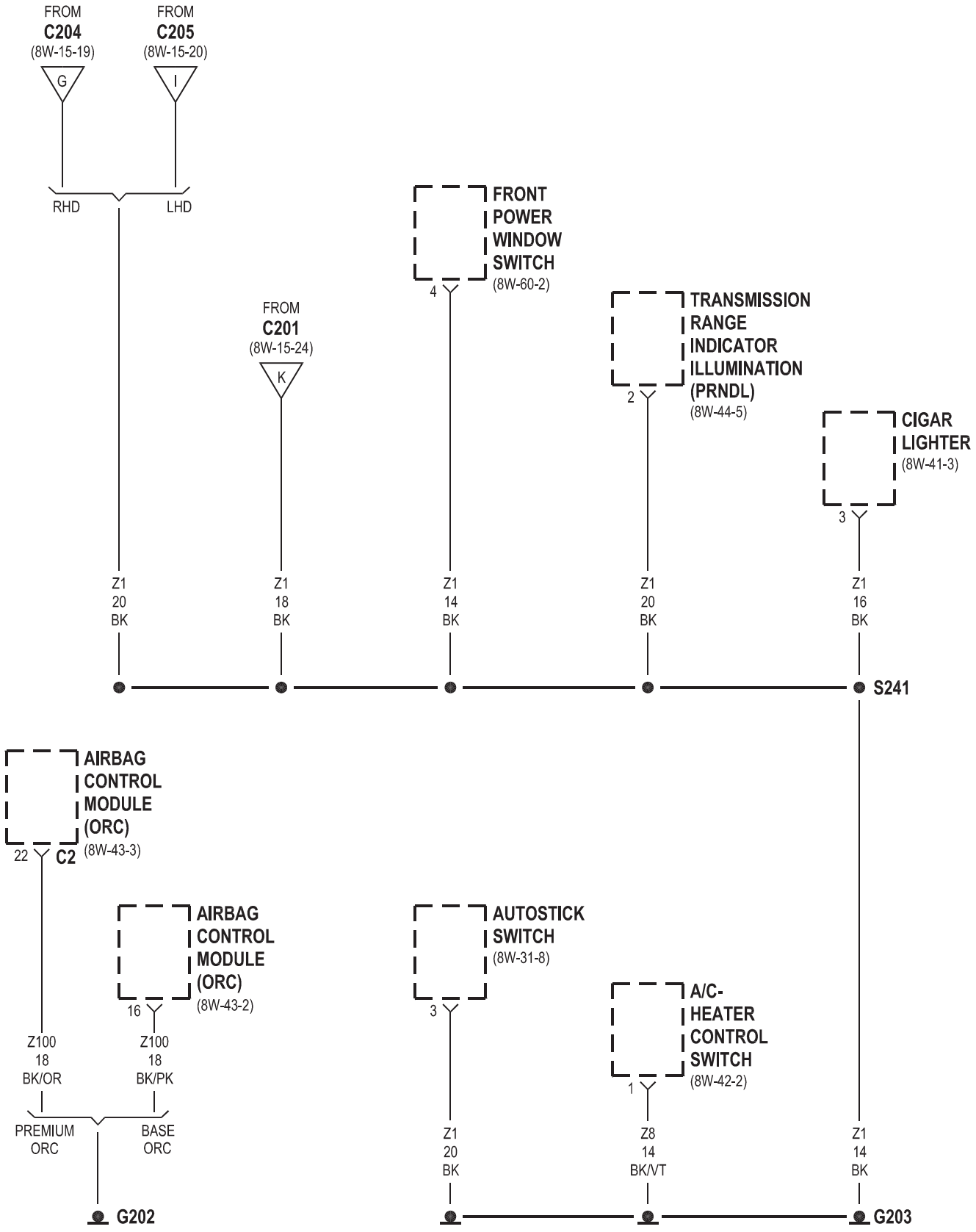
FROM
C204
(8W-15-19)
G
FROM
C205
(8W-15-20)
I
RHD
LHD
FROM
C201
(8W-15-24)
K
FRONT POWER WINDOW SWITCH
(8W-60-2)
4
TRANSMISSION RANGE INDICATOR ILLUMINATION (PRNDL)
(8W-44-5)
2
CIGAR LIGHTER
(8W-41-3)
3
Z1
20
BK
Z1
18
BK
Z1
14
BK
Z1
20
BK
Z1
16
BK
S241
AIRBAG CONTROL MODULE (ORC)
(8W-43-3)
22
C2
AIRBAG CONTROL MODULE (ORC)
(8W-43-2)
16
AUTOSTICK SWITCH
(8W-31-8)
3
A/C-HEATER CONTROL SWITCH
(8W-42-2)
1
Z100
18
BK/OR
Z100
18
BK/PK
PREMIUM ORC
BASE ORC
Z1
20
BK
Z8
14
BK/VT
Z1
14
BK
G202
G203

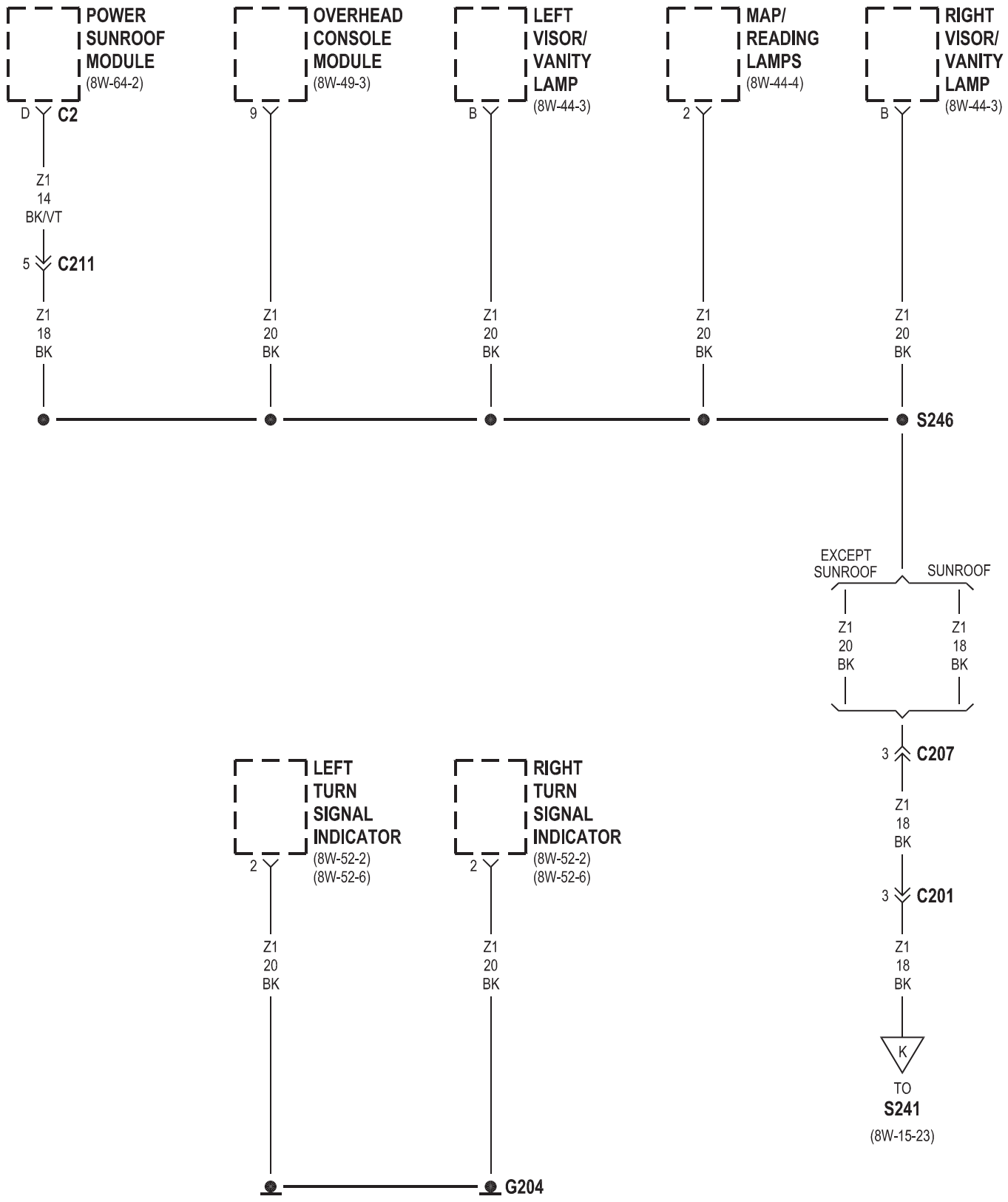
POWER SUNROOF MODULE
(8W-64-2)
D C2
Z1 14 BK/VT
5 C211
Z1 18 BK
OVERHEAD CONSOLE MODULE
(8W-49-3)
9
Z1 20 BK
LEFT VISOR/ VANITY LAMP
(8W-44-3)
B
Z1 20 BK
MAP/ READING LAMPS
(8W-44-4)
2
Z1 20 BK
RIGHT VISOR/ VANITY LAMP
(8W-44-3)
B
Z1 20 BK
S246
EXCEPT SUNROOF
SUNROOF
Z1 20 BK
Z1 18 BK
3 C207
Z1 18 BK
3 C201
Z1 18 BK
K
TO
S241
(8W-15-23)
LEFT TURN SIGNAL INDICATOR
(8W-52-2)
(8W-52-6)
2
Z1 20 BK
RIGHT TURN SIGNAL INDICATOR
(8W-52-2)
(8W-52-6)
2
Z1 20 BK
G204

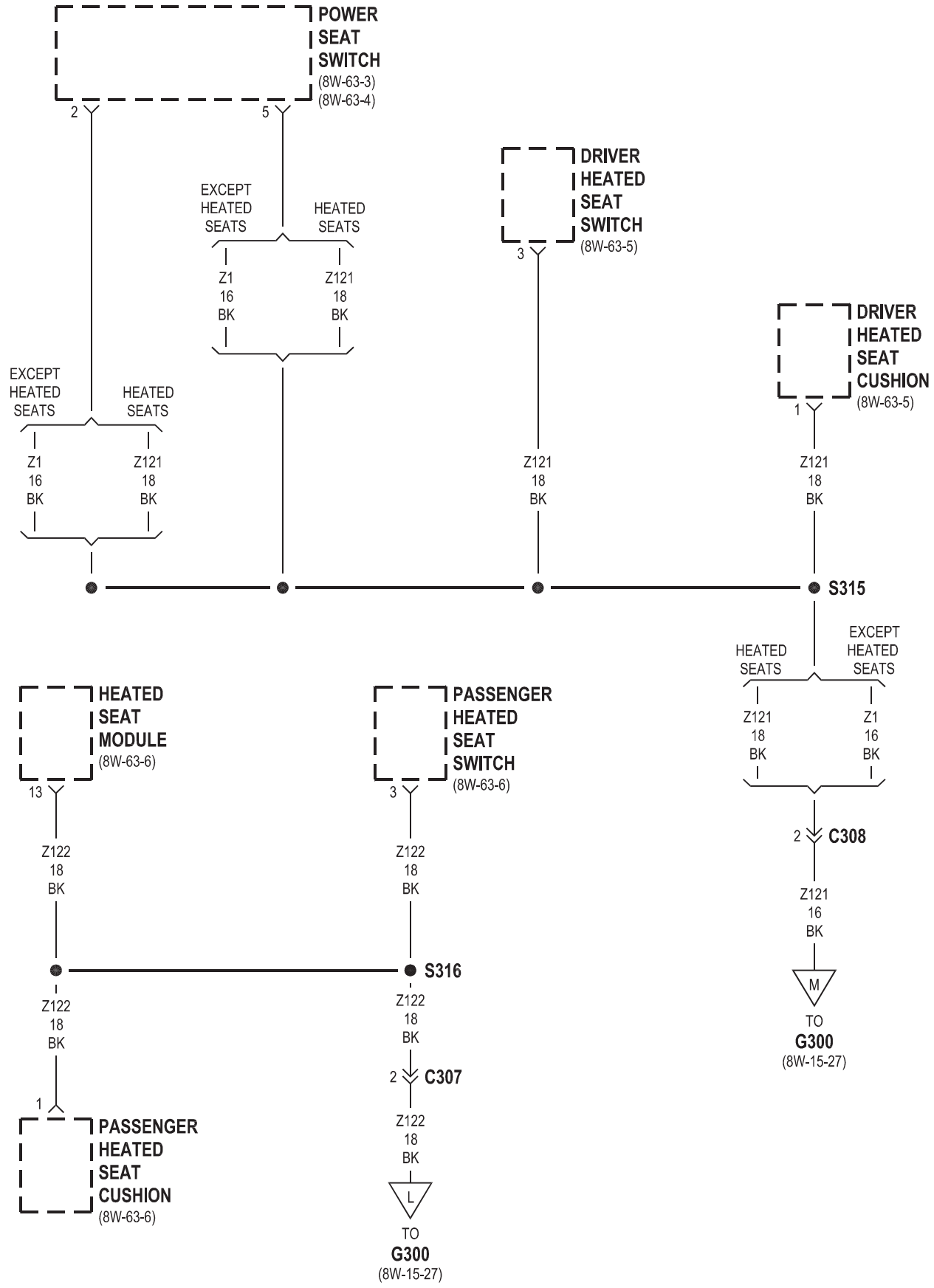
POWER SEAT SWITCH
(8W-63-3)
(8W-63-4)
2
5
EXCEPT HEATED SEATS
HEATED SEATS
Z1 16 BK
Z121 18 BK
DRIVER HEATED SEAT SWITCH
(8W-63-5)
3
DRIVER HEATED SEAT CUSHION
(8W-63-5)
1
Z121 18 BK
S315
HEATED SEAT MODULE
(8W-63-6)
13
Z122 18 BK
PASSENGER HEATED SEAT SWITCH
(8W-63-6)
C308
Z121 16 BK
M
TO
G300
(8W-15-27)
S316
C307
PASSENGER HEATED SEAT CUSHION
(8W-63-6)
L
TO
G300
(8W-15-27)

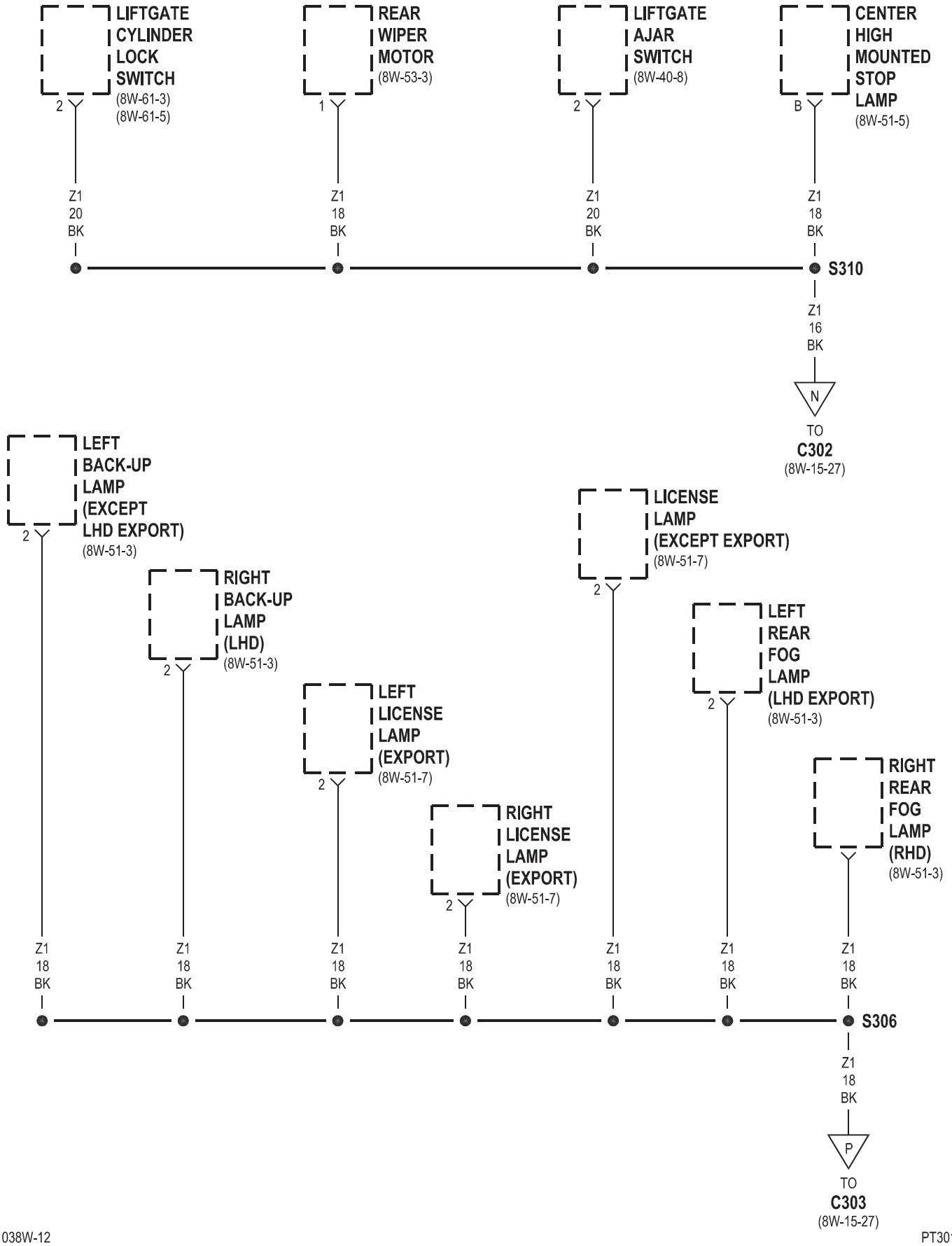
LIFTGATE CYLINDER LOCK SWITCH
(8W-61-3)
(8W-61-5)
2
REAR WIPER MOTOR
(8W-53-3)
1
LIFTGATE AJAR SWITCH
(8W-40-8)
2
CENTER HIGH MOUNTED STOP LAMP
(8W-51-5)
B
Z1 20 BK
Z1 18 BK
Z1 20 BK
Z1 18 BK
S310
Z1 16 BK
N
TO
C302
(8W-15-27)
LEFT BACK-UP LAMP (EXCEPT LHD EXPORT)
(8W-51-3)
2
RIGHT BACK-UP LAMP (LHD)
(8W-51-3)
2
LEFT LICENSE LAMP (EXPORT)
(8W-51-7)
2
RIGHT LICENSE LAMP (EXPORT)
(8W-51-7)
2
LICENSE LAMP (EXCEPT EXPORT)
(8W-51-7)
2
LEFT REAR FOG LAMP (LHD EXPORT)
(8W-51-3)
2
RIGHT REAR FOG LAMP (RHD)
(8W-51-3)
Z1 18 BK
Z1 18 BK
Z1 18 BK
Z1 18 BK
Z1 18 BK
Z1 18 BK
Z1 18 BK
S306
Z1 18 BK
P
TO
C303
(8W-15-27)

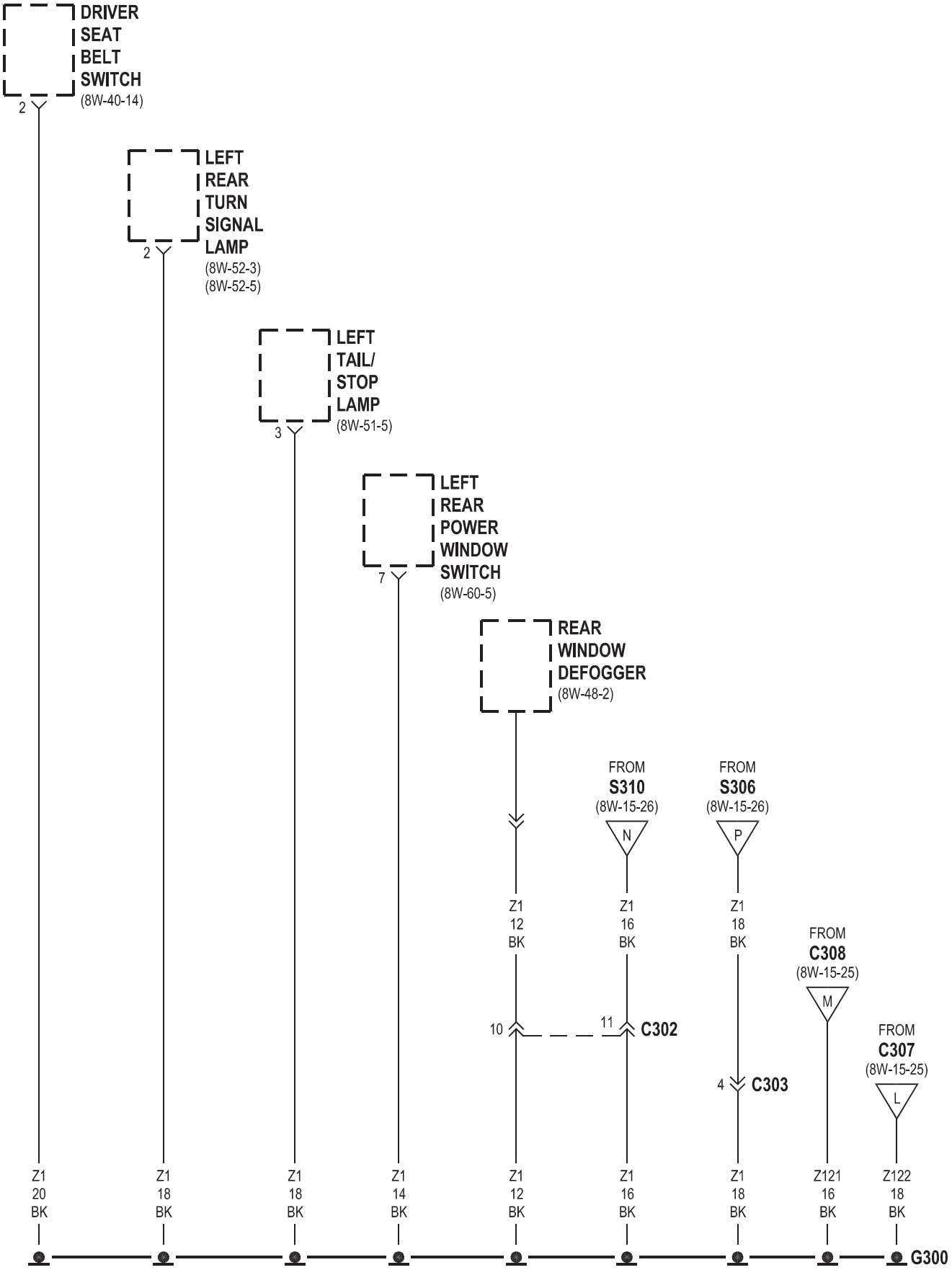
DRIVER SEAT BELT SWITCH
(8W-40-14)
2
LEFT REAR TURN SIGNAL LAMP
(8W-52-3)
(8W-52-5)
2
LEFT TAIL/ STOP LAMP
(8W-51-5)
3
LEFT REAR POWER WINDOW SWITCH
(8W-60-5)
7
REAR WINDOW DEFOGGER
(8W-48-2)
FROM S310 (8W-15-26)
N
FROM S306 (8W-15-26)
P
Z1 12 BK
Z1 16 BK
Z1 18 BK
FROM C308 (8W-15-25)
M
10
11
C302
FROM C307 (8W-15-25)
L
4
C303
Z1 20 BK
Z1 18 BK
Z1 18 BK
Z1 14 BK
Z1 12 BK
Z1 16 BK
Z1 18 BK
Z121 16 BK
Z122 18 BK
G300

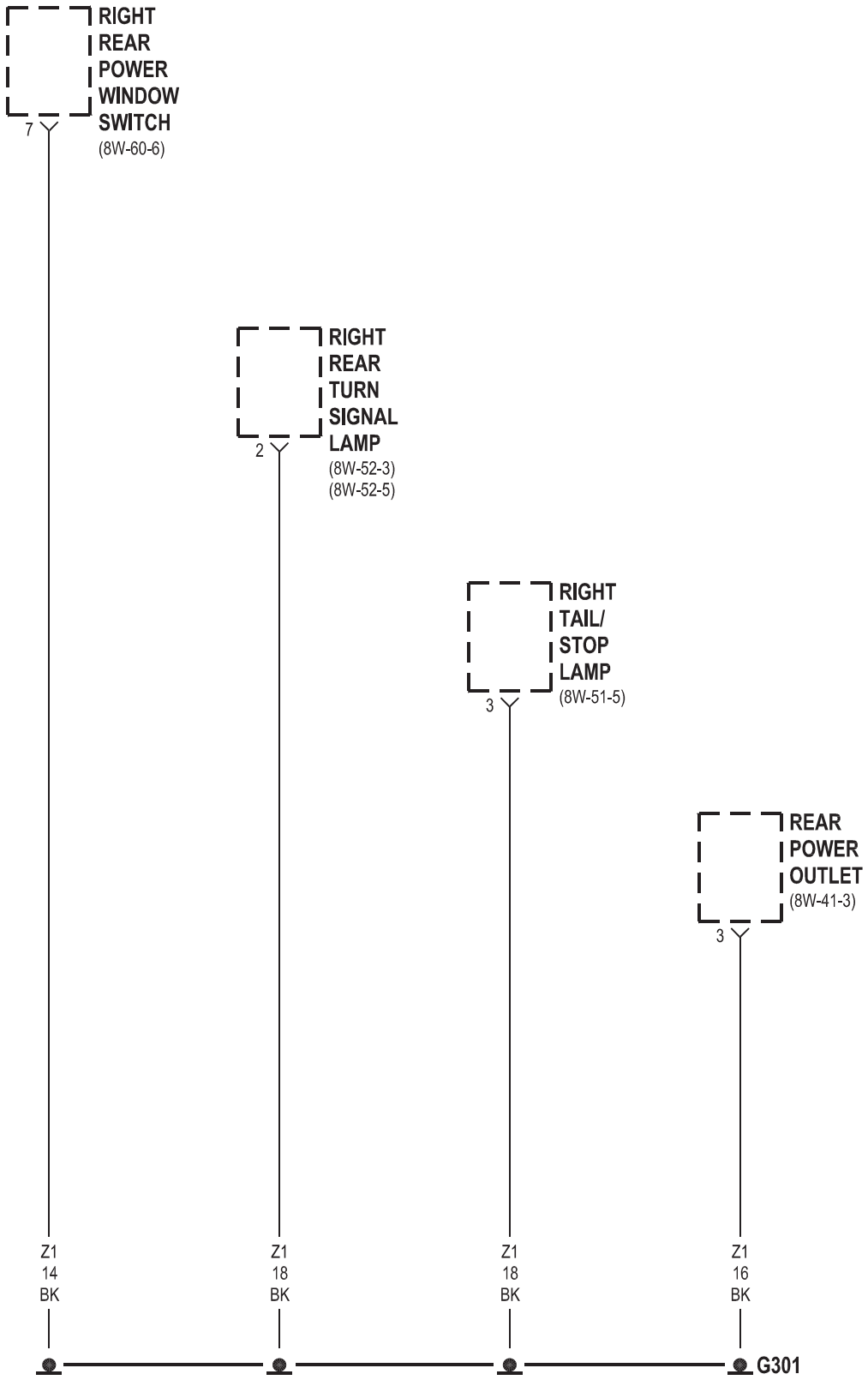
RIGHT
REAR
POWER
WINDOW
SWITCH
(8W-60-6)
7
RIGHT
REAR
TURN
SIGNAL
LAMP
(8W-52-3)
(8W-52-5)
2
RIGHT
TAIL/
STOP
LAMP
(8W-51-5)
3
REAR
POWER
OUTLET
(8W-41-3)
3
Z1
14
BK
Z1
18
BK
Z1
18
BK
Z1
16
BK
G301

8W-18 BUS COMMUNICATIONS

Component	Page
Airbag Control Module	8W-18-5
Controller Antilock Brake	8W-18-2, 3, 4
Data Link Connector	8W-18-2, 3, 4
Engine Control Module	8W-18-4
Fuse 13	8W-18-2, 3, 4
G102	8W-18-2, 3, 4
Instrument Cluster	8W-18-2, 3, 4, 5
Power Distribution Center	8W-18-2, 3, 4
Powertrain Control Module	8W-18-2, 3
Radio	8W-18-5
Remote Keyless Entry Module	8W-18-5
Sentry Key Immobilizer Module	8W-18-5

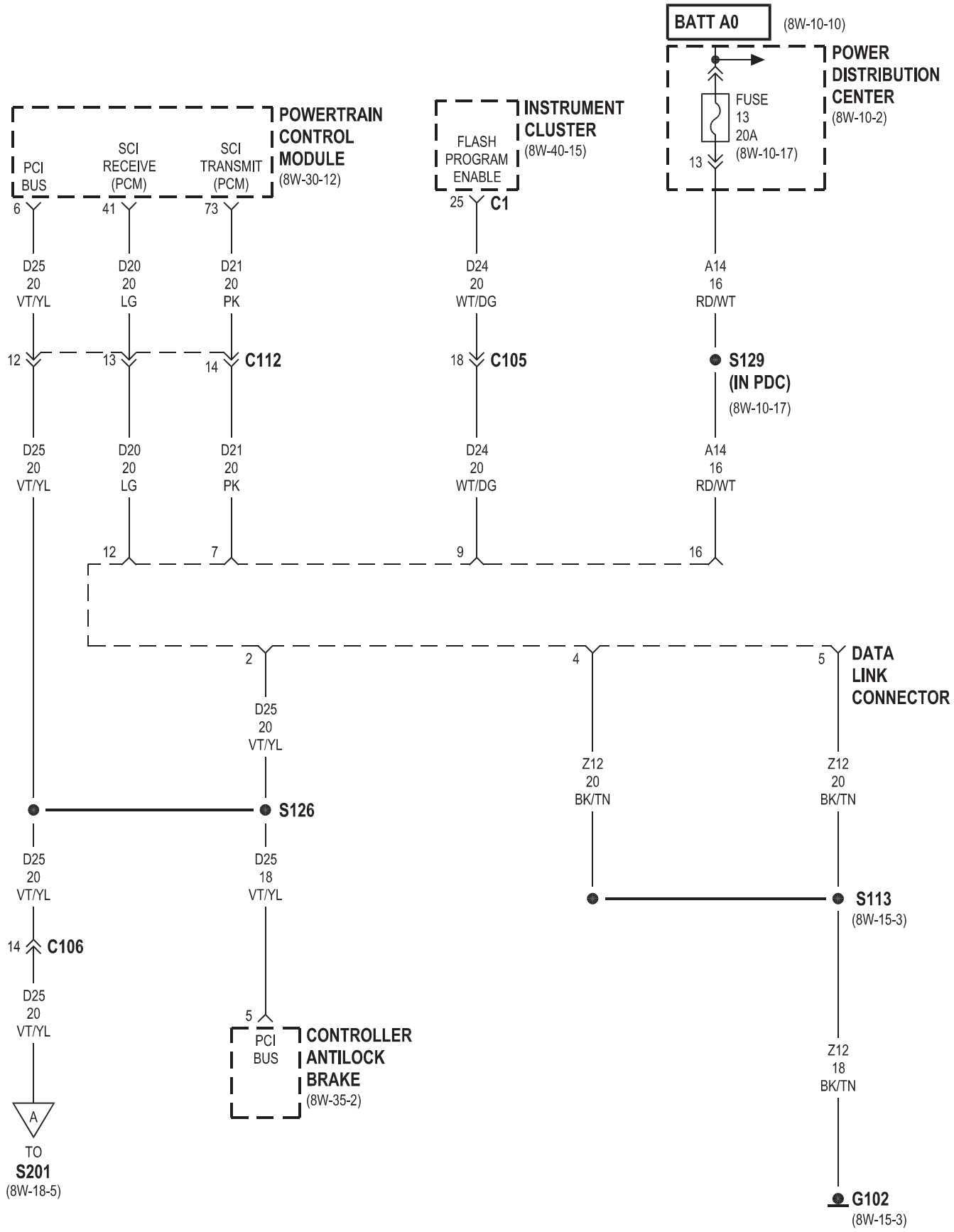
BATT A0
(8W-10-10)
POWER DISTRIBUTION CENTER
(8W-10-2)
FUSE 13 20A
(8W-10-17)
13
POWERTRAIN CONTROL MODULE
(8W-30-12)
PCI BUS
SCI RECEIVE (PCM)
SCI TRANSMIT (PCM)
6
41
73
INSTRUMENT CLUSTER
(8W-40-15)
FLASH PROGRAM ENABLE
25
C1
D25 20 VT/YL
D20 20 LG
D21 20 PK
D24 20 WT/DG
A14 16 RD/WT
12
13
14
C112
18
C105
S129
(IN PDC)
(8W-10-17)
12
7
9
16
2
4
5
DATA LINK CONNECTOR
Z12 20 BK/TN
S126
D25 18 VT/YL
S113
(8W-15-3)
14
C106
5
PCI BUS
CONTROLLER ANTILOCK BRAKE
(8W-35-2)
Z12 18 BK/TN
A
TO
S201
(8W-18-5)
G102
(8W-15-3)

2.0L/2.4L

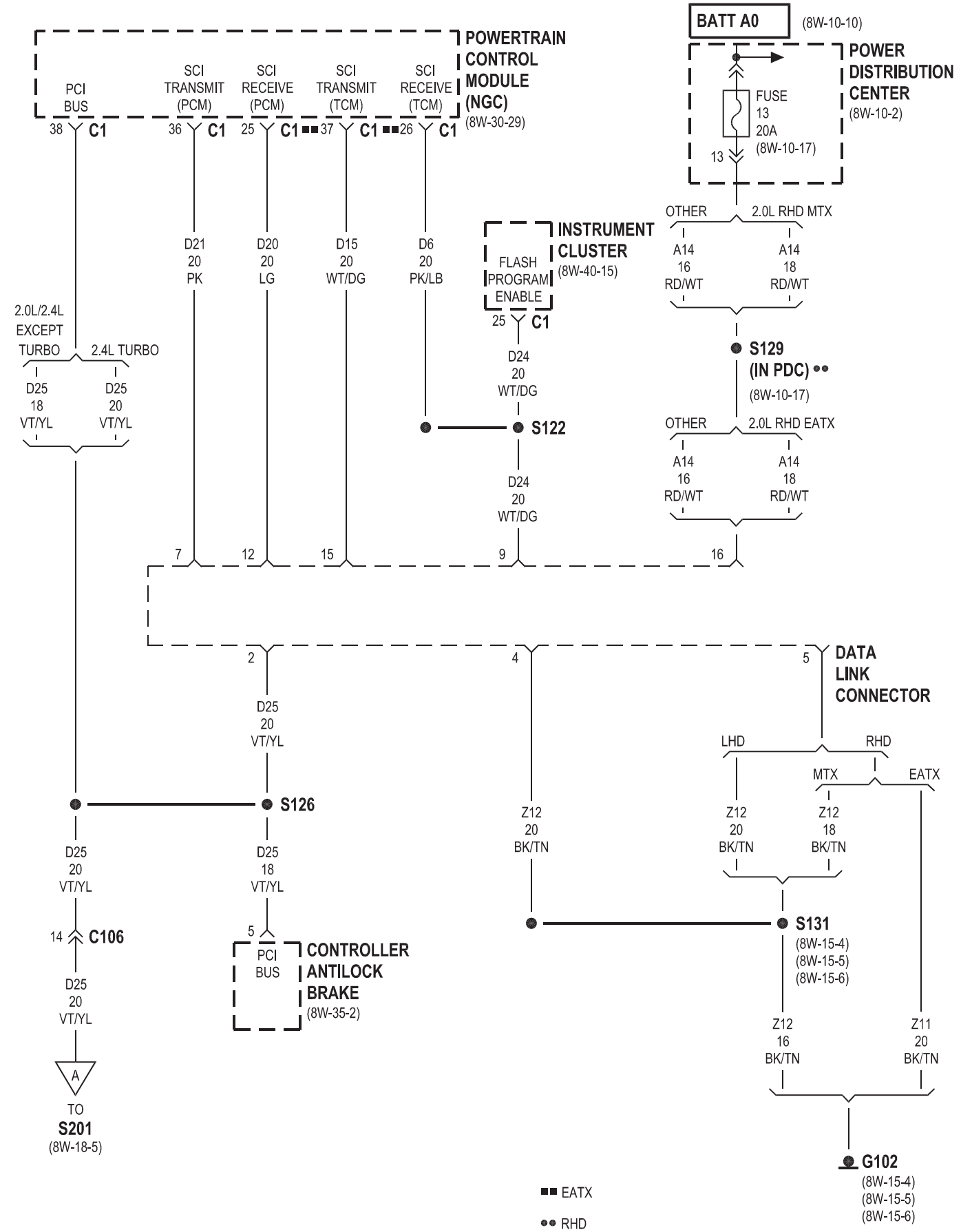
BATT A0
(8W-10-10)
POWERTRAIN CONTROL MODULE (NGC)
(8W-30-29)
PCI BUS
SCI TRANSMIT (PCM)
SCI RECEIVE (PCM)
SCI TRANSMIT (TCM)
SCI RECEIVE (TCM)
38 C1
36 C1
25 C1
37 C1
26 C1
POWER DISTRIBUTION CENTER
(8W-10-2)
FUSE 13 20A
(8W-10-17)
13
OTHER
2.0L RHD MTX
A14 16 RD/WT
A14 18 RD/WT
INSTRUMENT CLUSTER
(8W-40-15)
FLASH PROGRAM ENABLE
25 C1
D21 20 PK
D20 20 LG
D15 20 WT/DG
D6 20 PK/LB
D24 20 WT/DG
S122
S129 (IN PDC)
(8W-10-17)
OTHER
2.0L RHD EATX
A14 16 RD/WT
A14 18 RD/WT
2.0L/2.4L EXCEPT TURBO
2.4L TURBO
D25 18 VT/YL
D25 20 VT/YL
7
12
15
9
16
2
4
5
DATA LINK CONNECTOR
D25 20 VT/YL
LHD
RHD
MTX
EATX
S126
Z12 20 BK/TN
Z12 20 BK/TN
Z12 18 BK/TN
D25 20 VT/YL
D25 18 VT/YL
14 C106
5
PCI BUS
CONTROLLER ANTILOCK BRAKE
(8W-35-2)
S131
(8W-15-4)
(8W-15-5)
(8W-15-6)
D25 20 VT/YL
Z12 16 BK/TN
Z11 20 BK/TN
A
TO S201
(8W-18-5)
G102
(8W-15-4)
(8W-15-5)
(8W-15-6)
EATX
RHD

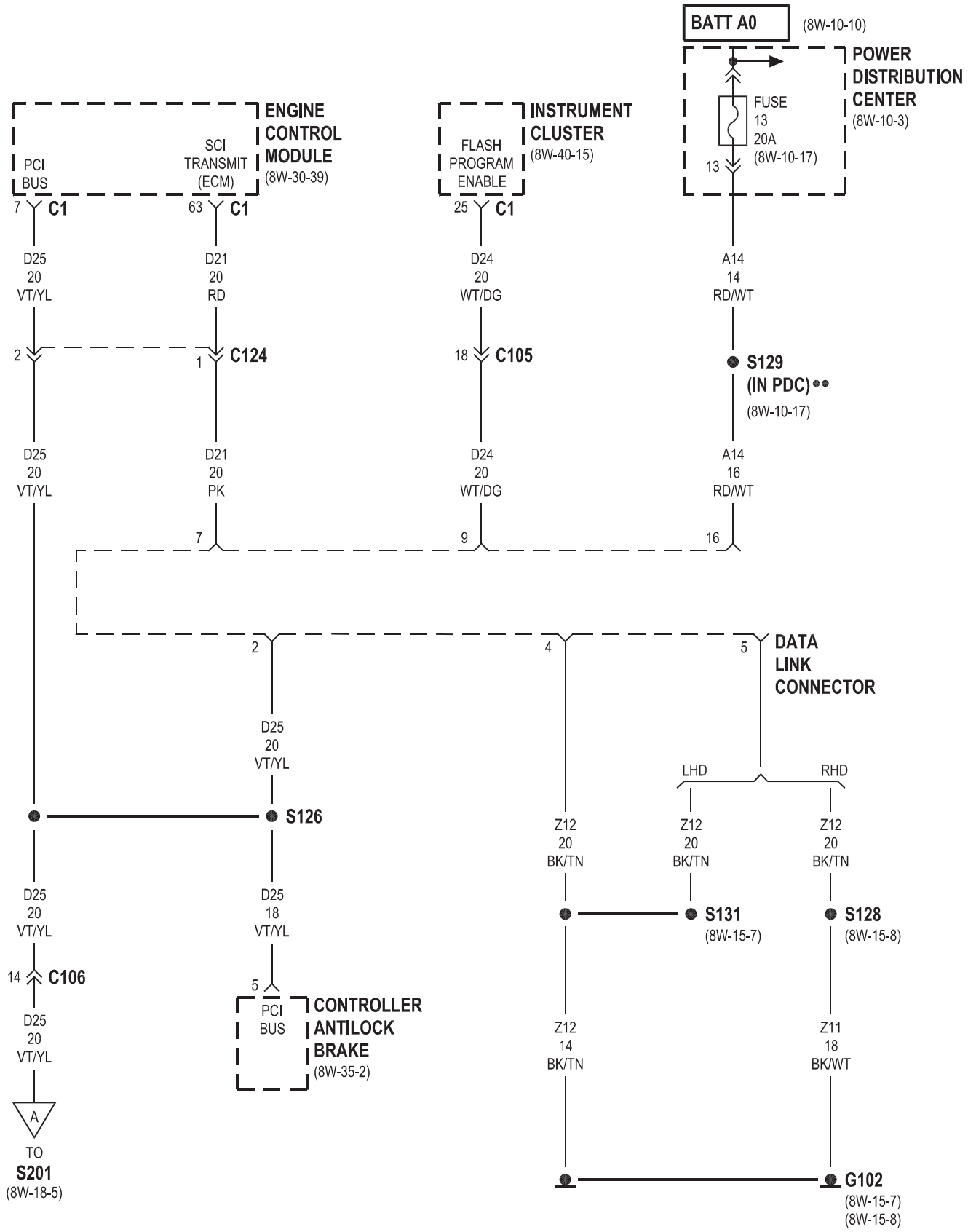
BATT A0
(8W-10-10)
POWER DISTRIBUTION CENTER
(8W-10-3)
FUSE 13 20A
(8W-10-17)
13
ENGINE CONTROL MODULE
(8W-30-39)
PCI BUS
SCI TRANSMIT (ECM)
7 C1
63 C1
INSTRUMENT CLUSTER
(8W-40-15)
FLASH PROGRAM ENABLE
25 C1
D25 20 VT/YL
D21 20 RD
D24 20 WT/DG
A14 14 RD/WT
2
1 C124
18 C105
S129 (IN PDC)••
(8W-10-17)
D25 20 VT/YL
D21 20 PK
D24 20 WT/DG
A14 16 RD/WT
7
9
16
2
4
5 DATA LINK CONNECTOR
D25 20 VT/YL
LHD
RHD
S126
Z12 20 BK/TN
Z12 20 BK/TN
Z12 20 BK/TN
D25 20 VT/YL
D25 18 VT/YL
S131
(8W-15-7)
S128
(8W-15-8)
14 C106
5
PCI BUS
CONTROLLER ANTILOCK BRAKE
(8W-35-2)
Z12 14 BK/TN
Z11 18 BK/WT
D25 20 VT/YL
A
TO
S201
(8W-18-5)
G102
(8W-15-7)
(8W-15-8)
•• RHD

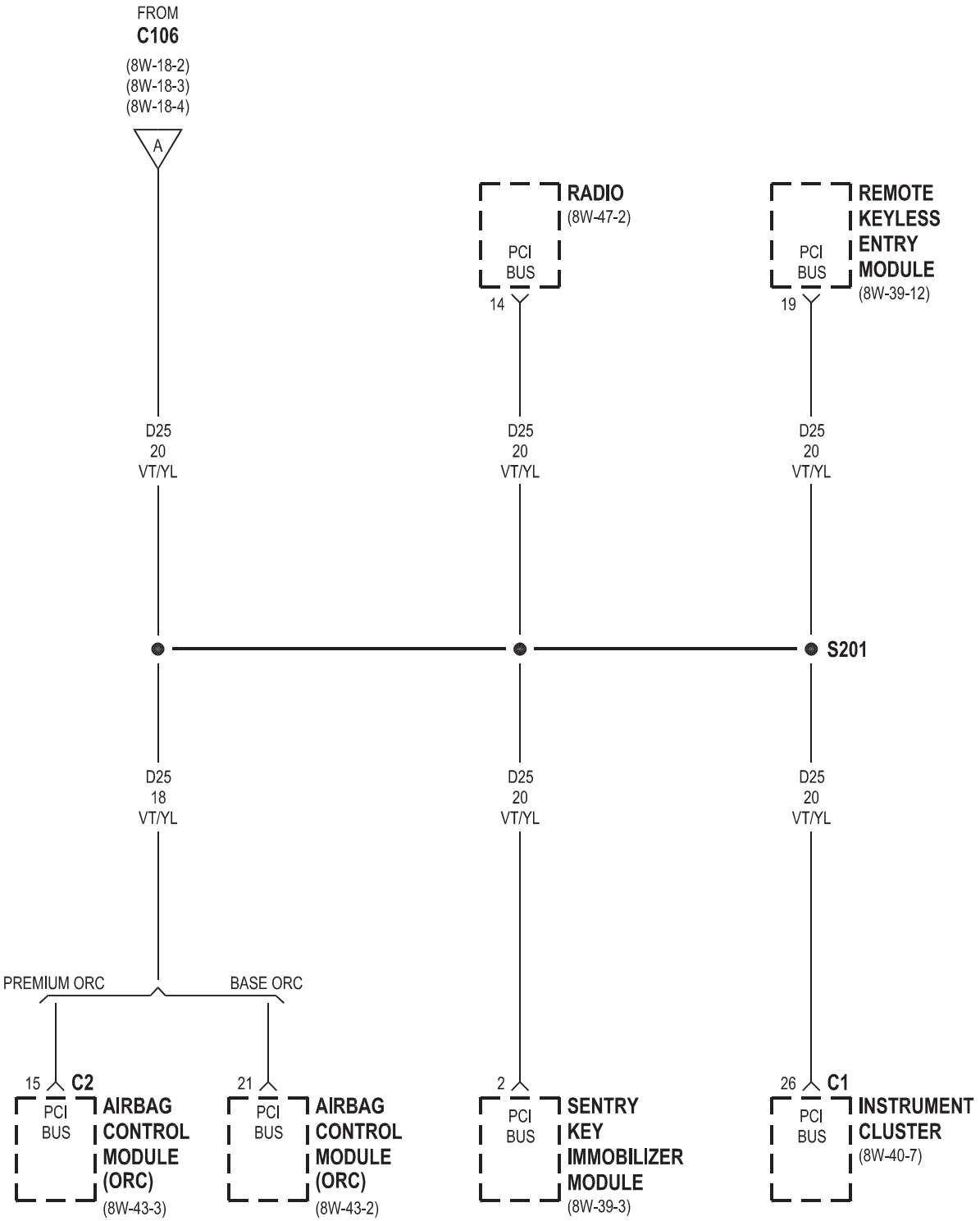
FROM
C106
(8W-18-2)
(8W-18-3)
(8W-18-4)
A
RADIO
(8W-47-2)
PCI BUS
14
REMOTE KEYLESS ENTRY MODULE
(8W-39-12)
PCI BUS
19
D25
20
VT/YL
D25
20
VT/YL
D25
20
VT/YL
S201
D25
18
VT/YL
D25
20
VT/YL
D25
20
VT/YL
PREMIUM ORC
BASE ORC
15
C2
PCI BUS
AIRBAG CONTROL MODULE (ORC)
(8W-43-3)
21
PCI BUS
AIRBAG CONTROL MODULE (ORC)
(8W-43-2)
2
PCI BUS
SENTRY KEY IMMOBILIZER MODULE
(8W-39-3)
26
C1
PCI BUS
INSTRUMENT CLUSTER
(8W-40-7)

8W-20 CHARGING SYSTEM

Component	Page
Auto Shut Down Relay	8W-20-2, 3, 4, 6
Battery	8W-20-2, 3, 4, 6
Battery Jump Post	8W-20-6
Battery Temperature Sensor	8W-20-3, 5, 7
Engine Control Module	8W-20-6, 7
Fuse 13	8W-20-2, 3, 4, 6
Fusible Link	8W-20-2, 3, 4, 5, 6
G100	8W-20-2, 3, 4, 6
G101	8W-20-2, 3, 4, 6
G103	8W-20-3, 5
Generator	8W-20-2, 3, 5, 6, 7
Mega Fuse	8W-20-6
Power Distribution Center	8W-20-2, 3, 4, 6
Powertrain Control Module	8W-20-2, 3, 4, 5
Radiator Fan Motor	8W-20-4
Starter Motor	8W-20-2, 3, 4, 6

1.6L

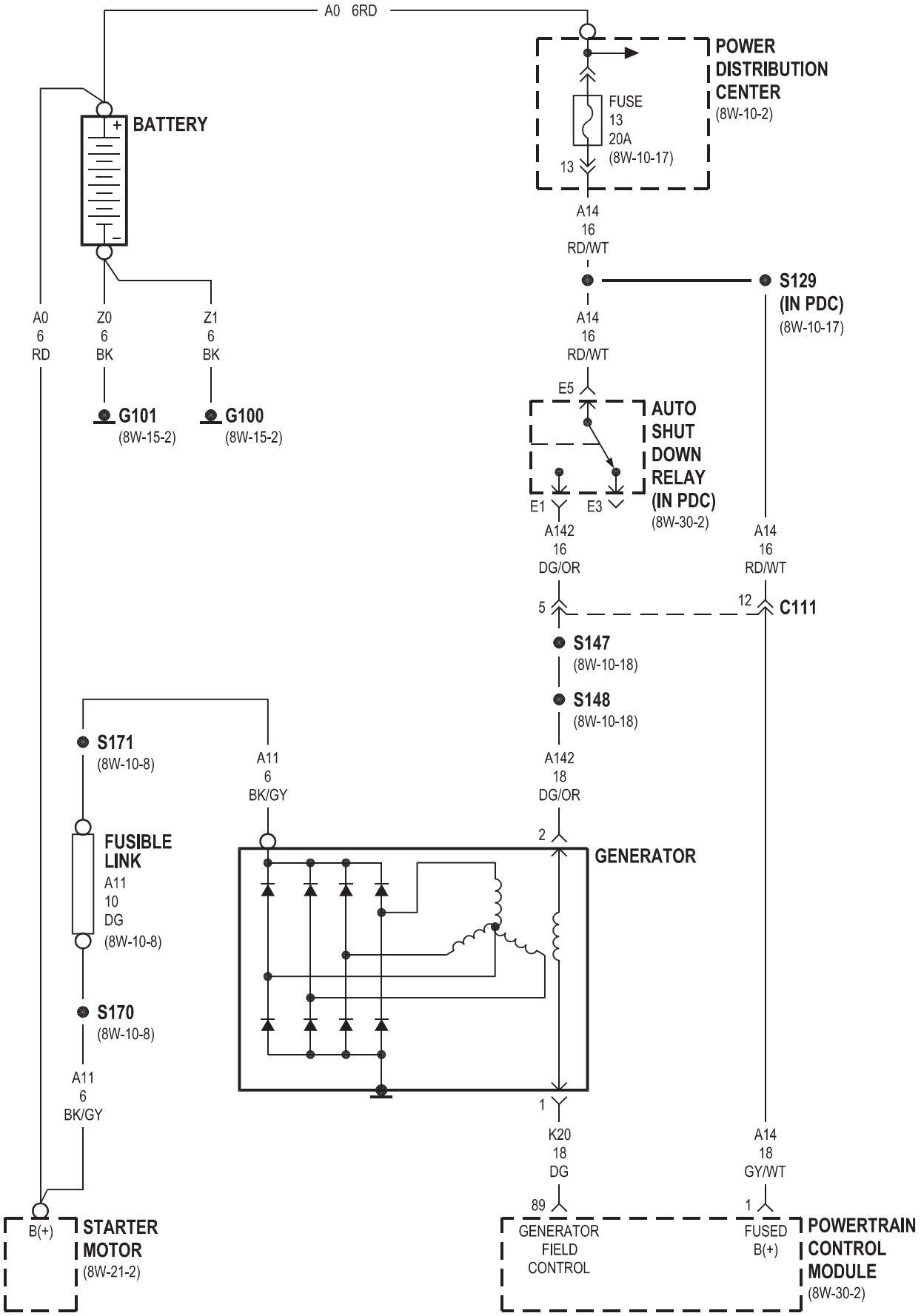
A0 6RD
POWER DISTRIBUTION CENTER
(8W-10-2)
FUSE 13 20A
(8W-10-17)
13
BATTERY
+
–
A14 16 RD/WT
S129 (IN PDC)
(8W-10-17)
A0 6 RD
Z0 6 BK
Z1 6 BK
A14 16 RD/WT
E5
G101
(8W-15-2)
G100
(8W-15-2)
AUTO SHUT DOWN RELAY (IN PDC)
(8W-30-2)
E1
E3
A142 16 DG/OR
A14 16 RD/WT
5
12
C111
S147
(8W-10-18)
S148
(8W-10-18)
S171
(8W-10-8)
A11 6 BK/GY
A142 18 DG/OR
2
FUSIBLE LINK
A11 10 DG
(8W-10-8)
GENERATOR
S170
(8W-10-8)
A11 6 BK/GY
1
K20 18 DG
A14 18 GY/WT
89
1
B(+)
STARTER MOTOR
(8W-21-2)
GENERATOR FIELD CONTROL
FUSED B(+)
POWERTRAIN CONTROL MODULE
(8W-30-2)

2.0L/2.4L EXCEPT TURBO

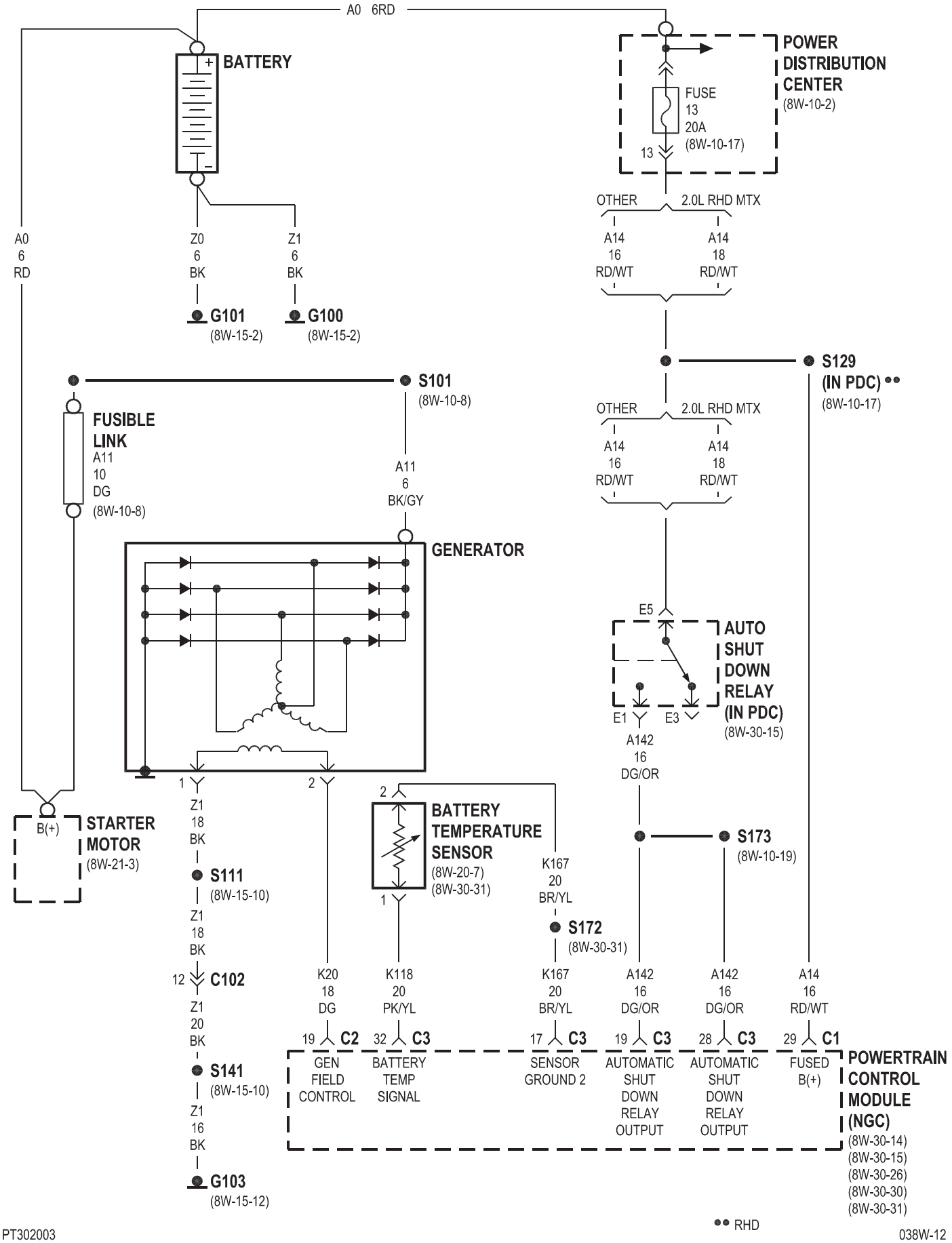

2.4L TURBO

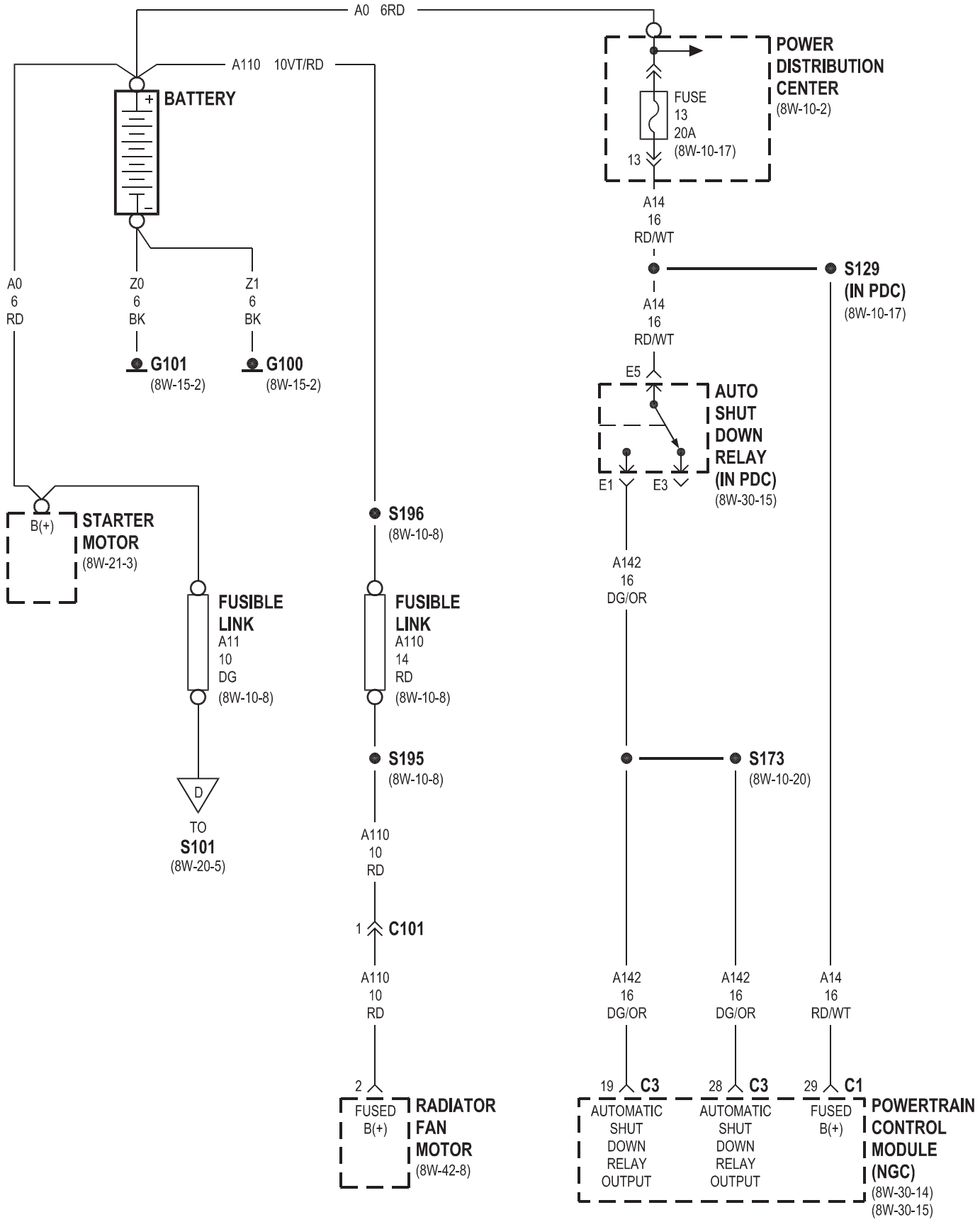
A0 6RD
A110 10VT/RD
BATTERY
+
-
A0
6
RD
Z0
6
BK
Z1
6
BK
G101
(8W-15-2)
G100
(8W-15-2)
B(+)
STARTER
MOTOR
(8W-21-3)
FUSIBLE
LINK
A11
10
DG
(8W-10-8)
D
TO
S101
(8W-20-5)
S196
(8W-10-8)
FUSIBLE
LINK
A110
14
RD
(8W-10-8)
S195
(8W-10-8)
A110
10
RD
1
C101
A110
10
RD
2
FUSED
B(+)
RADIATOR
FAN
MOTOR
(8W-42-8)
POWER
DISTRIBUTION
CENTER
(8W-10-2)
FUSE
13
20A
(8W-10-17)
13
A14
16
RD/WT
S129
(IN PDC)
(8W-10-17)
A14
16
RD/WT
E5
AUTO
SHUT
DOWN
RELAY
(IN PDC)
(8W-30-15)
E1
E3
A142
16
DG/OR
S173
(8W-10-20)
A142
16
DG/OR
A142
16
DG/OR
A14
16
RD/WT
19
C3
28
C3
29
C1
AUTOMATIC
SHUT
DOWN
RELAY
OUTPUT
AUTOMATIC
SHUT
DOWN
RELAY
OUTPUT
FUSED
B(+)
POWERTRAIN
CONTROL
MODULE
(NGC)
(8W-30-14)
(8W-30-15)

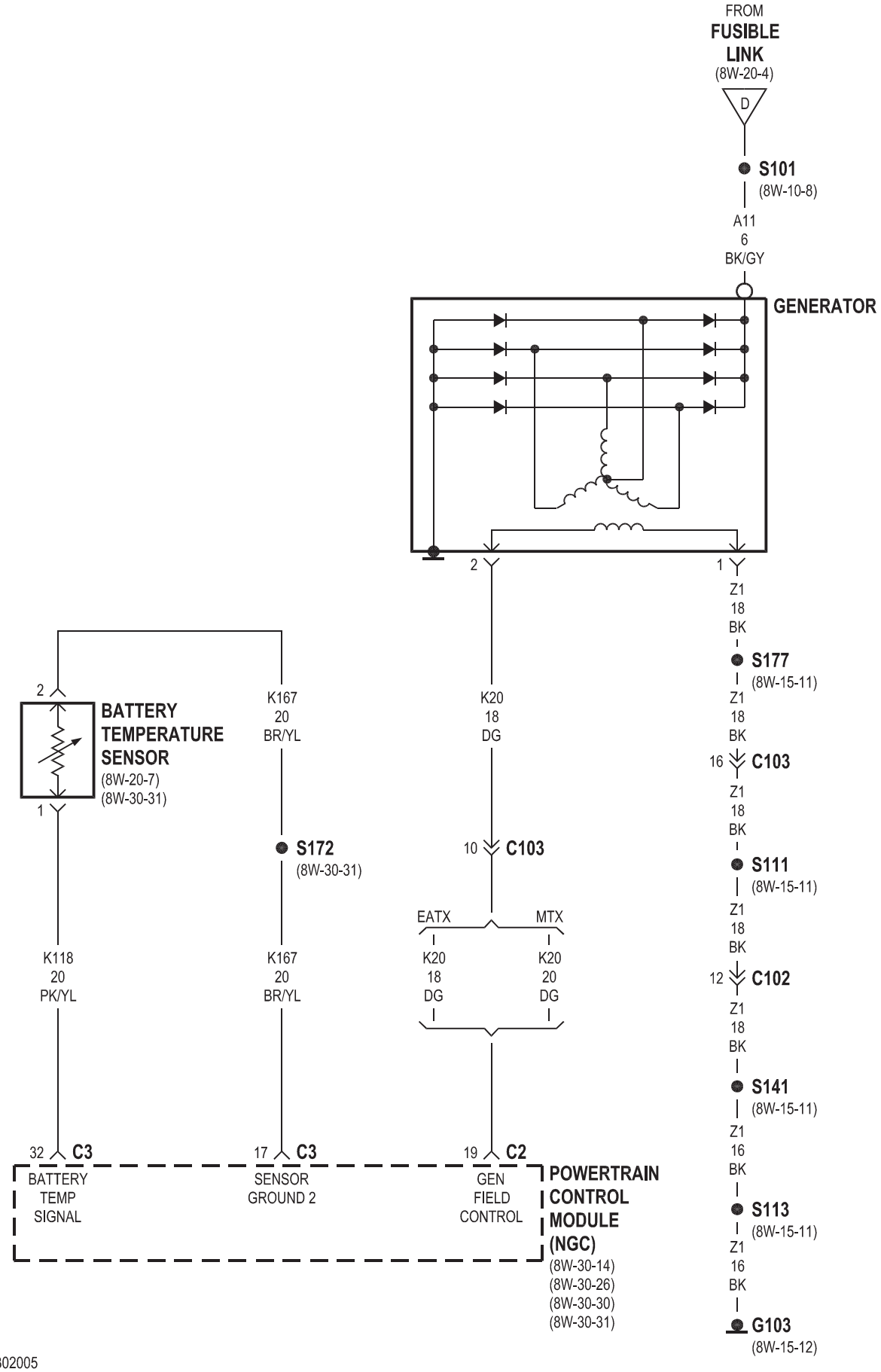
FROM
FUSIBLE
LINK
(8W-20-4)
D
S101
(8W-10-8)
A11
6
BK/GY
GENERATOR
2
1
Z1
18
BK
S177
(8W-15-11)
Z1
18
BK
16
C103
Z1
18
BK
S111
(8W-15-11)
Z1
18
BK
12
C102
Z1
18
BK
S141
(8W-15-11)
Z1
16
BK
S113
(8W-15-11)
Z1
16
BK
G103
(8W-15-12)
2
BATTERY
TEMPERATURE
SENSOR
(8W-20-7)
(8W-30-31)
1
K167
20
BR/YL
S172
(8W-30-31)
K20
18
DG
10
C103
EATX
MTX
K20
18
DG
K20
20
DG
K118
20
PK/YL
K167
20
BR/YL
32
C3
BATTERY
TEMP
SIGNAL
17
C3
SENSOR
GROUND 2
19
C2
GEN
FIELD
CONTROL
POWERTRAIN
CONTROL
MODULE
(NGC)
(8W-30-14)
(8W-30-26)
(8W-30-30)
(8W-30-31)

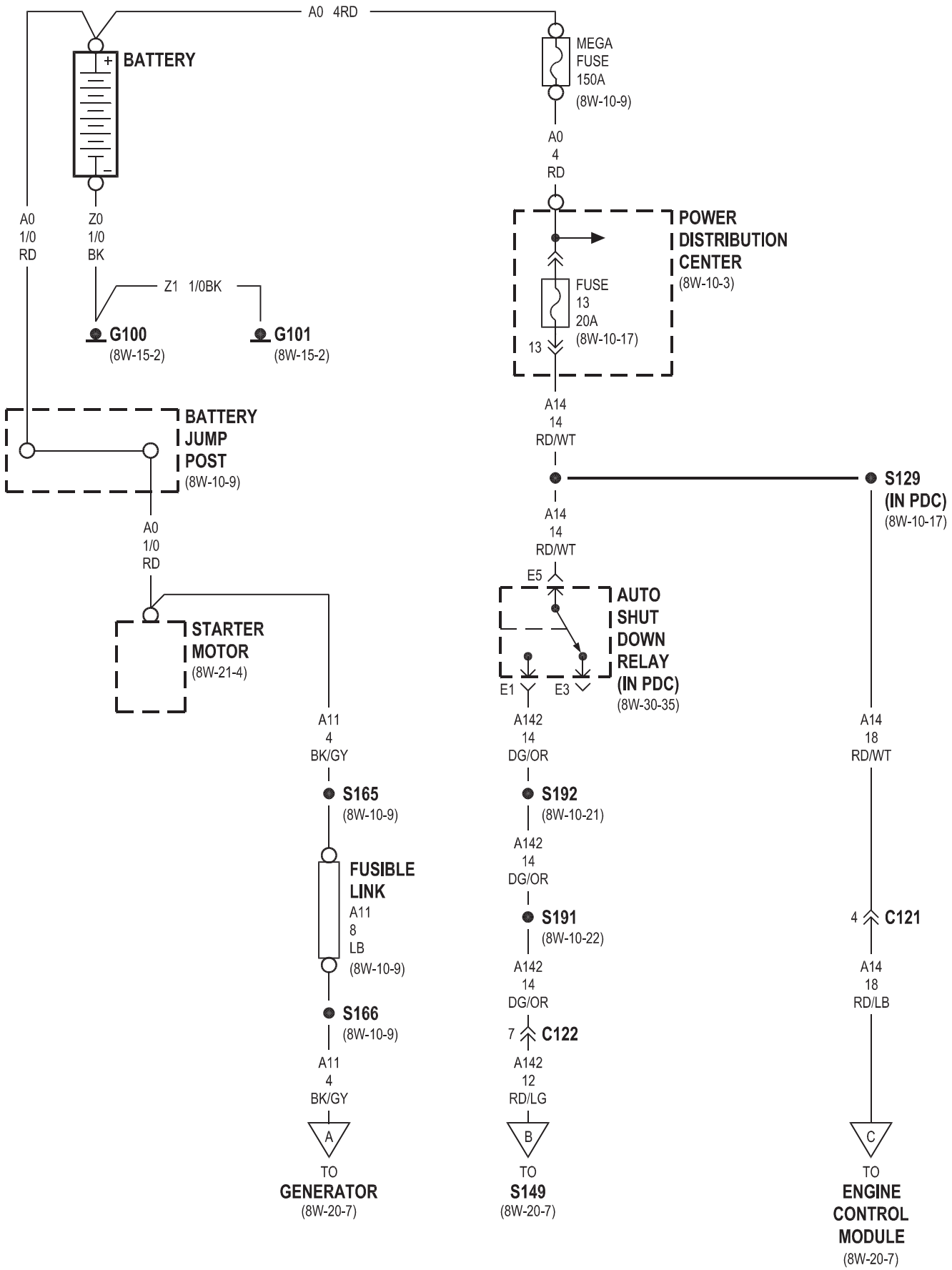
A0 4RD
BATTERY
+
–
MEGA FUSE 150A (8W-10-9)
A0 4 RD
A0 1/0 RD
Z0 1/0 BK
Z1 1/0BK
G100 (8W-15-2)
G101 (8W-15-2)
POWER DISTRIBUTION CENTER (8W-10-3)
FUSE 13 20A (8W-10-17)
13
A14 14 RD/WT
BATTERY JUMP POST (8W-10-9)
S129 (IN PDC) (8W-10-17)
A14 14 RD/WT
A0 1/0 RD
E5
STARTER MOTOR (8W-21-4)
AUTO SHUT DOWN RELAY (IN PDC) (8W-30-35)
E1
E3
A11 4 BK/GY
A142 14 DG/OR
A14 18 RD/WT
S165 (8W-10-9)
S192 (8W-10-21)
FUSIBLE LINK A11 8 LB (8W-10-9)
A142 14 DG/OR
S191 (8W-10-22)
4 C121
A142 14 DG/OR
A14 18 RD/LB
S166 (8W-10-9)
7 C122
A11 4 BK/GY
A142 12 RD/LG
A
B
C
TO GENERATOR (8W-20-7)
TO S149 (8W-20-7)
TO ENGINE CONTROL MODULE (8W-20-7)

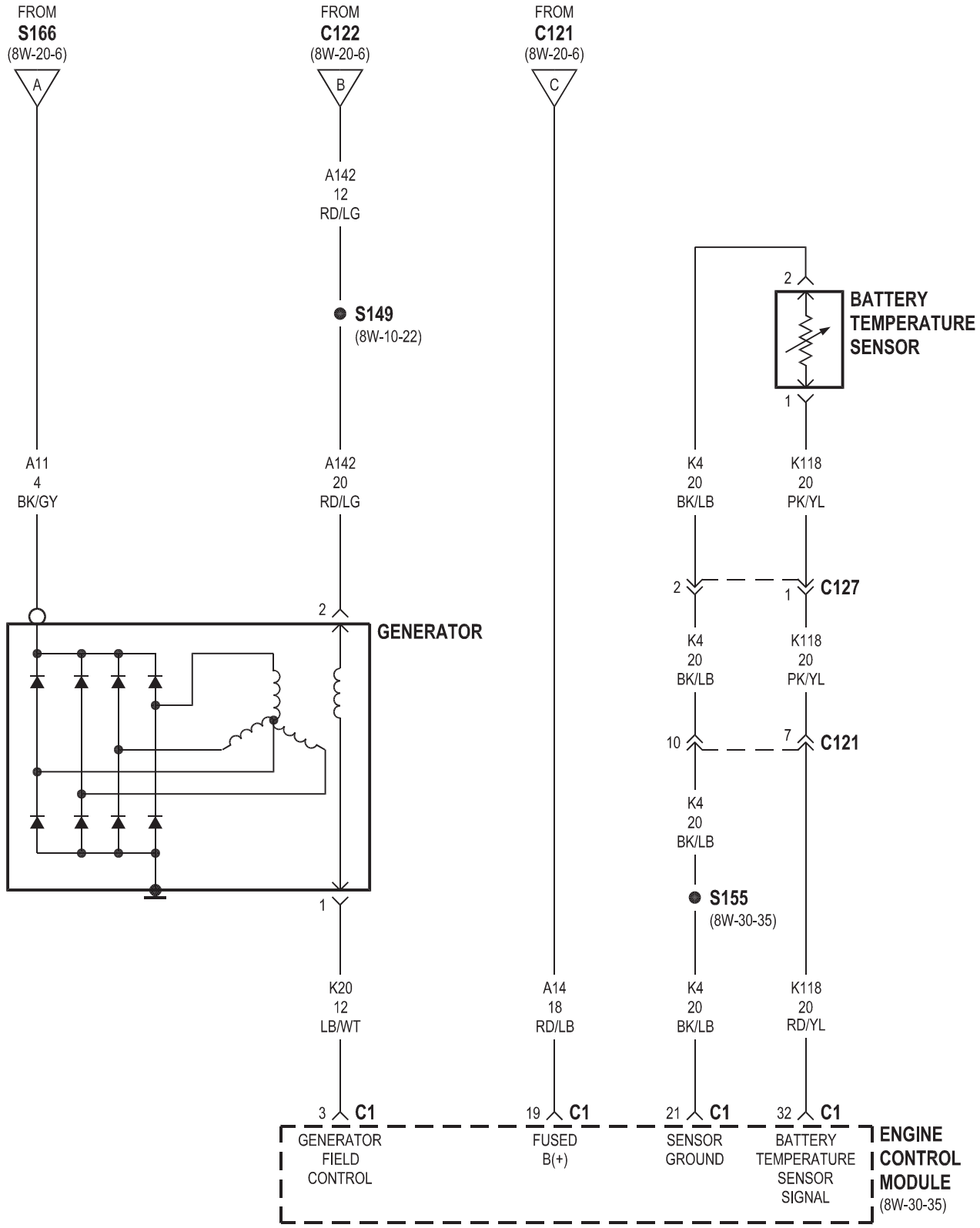
FROM
S166
(8W-20-6)
A
FROM
C122
(8W-20-6)
B
FROM
C121
(8W-20-6)
C
A142
12
RD/LG
S149
(8W-10-22)
2
BATTERY
TEMPERATURE
SENSOR
1
A11
4
BK/GY
A142
20
RD/LG
K4
20
BK/LB
K118
20
PK/YL
2
1
C127
2
GENERATOR
K4
20
BK/LB
K118
20
PK/YL
10
7
C121
K4
20
BK/LB
S155
(8W-30-35)
1
K20
12
LB/WT
A14
18
RD/LB
K4
20
BK/LB
K118
20
RD/YL
3
C1
19
C1
21
C1
32
C1
GENERATOR
FIELD
CONTROL
FUSED
B(+)
SENSOR
GROUND
BATTERY
TEMPERATURE
SENSOR
SIGNAL
ENGINE
CONTROL
MODULE
(8W-30-35)

8W-21 STARTING SYSTEM

Component	Page
Battery	8W-21-2, 3, 4
Battery Jump Post	8W-21-4
Engine Control Module	8W-21-4
Fuse 1	8W-21-2, 3, 4
Fuse 16	8W-21-3
Fusible Link	8W-21-2, 3, 4
Generator	8W-21-2, 3, 4
Ignition Switch	8W-21-2, 3, 4
Mega Fuse	8W-21-4
Power Distribution Center	8W-21-2, 3, 4
Powertrain Control Module	8W-21-2, 3
Starter Motor	8W-21-2, 3, 4
Starter Motor Relay	8W-21-2, 3, 4

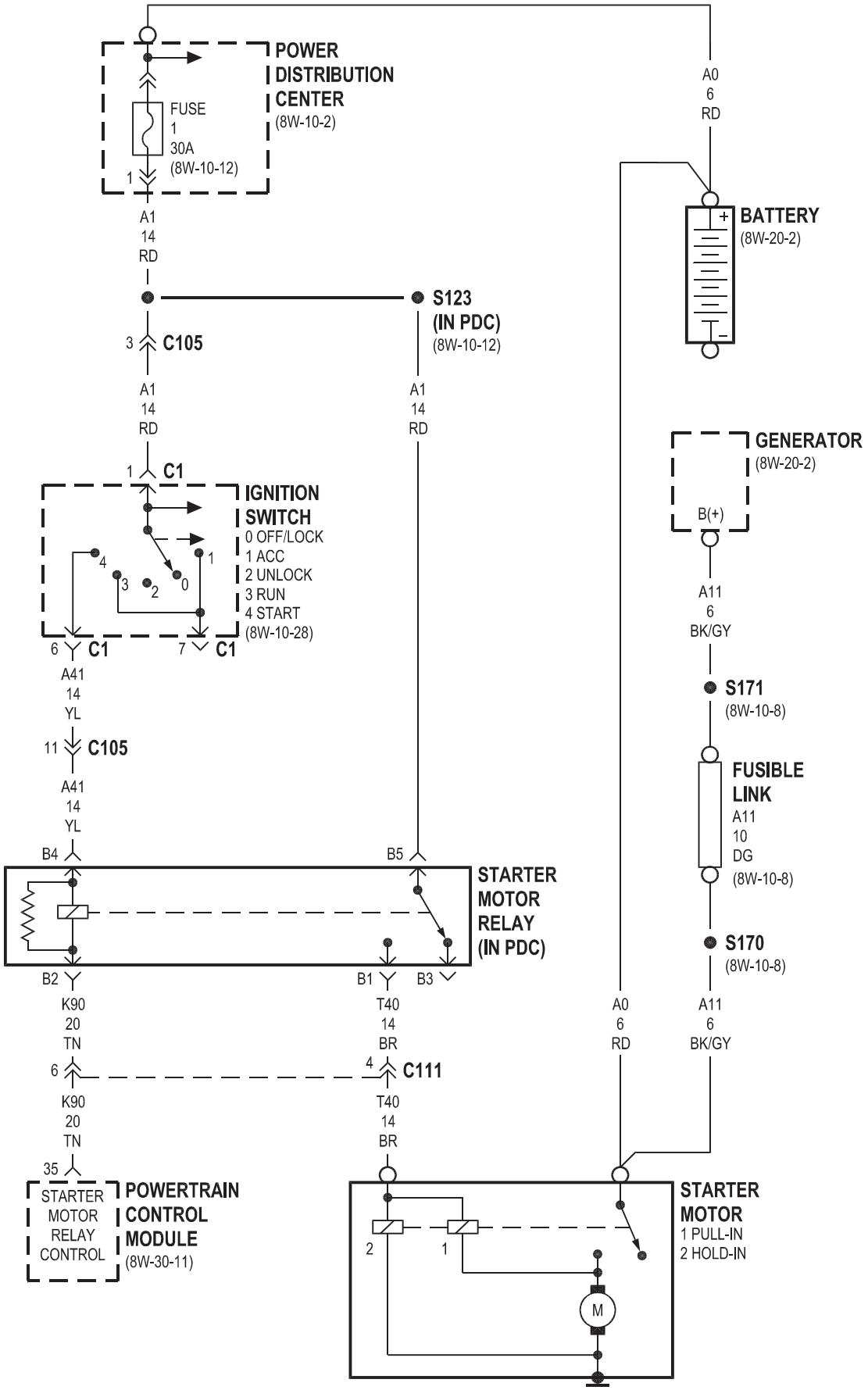
POWER DISTRIBUTION CENTER
(8W-10-2)
FUSE 1 30A
(8W-10-12)
1
A1 14 RD
3 C105
A1 14 RD
S123 (IN PDC)
(8W-10-12)
A1 14 RD
A0 6 RD
BATTERY
(8W-20-2)
GENERATOR
(8W-20-2)
B(+)
A11 6 BK/GY
S171
(8W-10-8)
FUSIBLE LINK
A11 10 DG
(8W-10-8)
S170
(8W-10-8)
1 C1
IGNITION SWITCH
0 OFF/LOCK
1 ACC
2 UNLOCK
3 RUN
4 START
(8W-10-28)
6 C1
7 C1
A41 14 YL
11 C105
A41 14 YL
B4
B5
STARTER MOTOR RELAY (IN PDC)
B2
B1
B3
K90 20 TN
T40 14 BR
A0 6 RD
A11 6 BK/GY
6
4 C111
K90 20 TN
T40 14 BR
35
STARTER MOTOR RELAY CONTROL
POWERTRAIN CONTROL MODULE
(8W-30-11)
2
1
M
STARTER MOTOR
1 PULL-IN
2 HOLD-IN

2.0L/2.4L

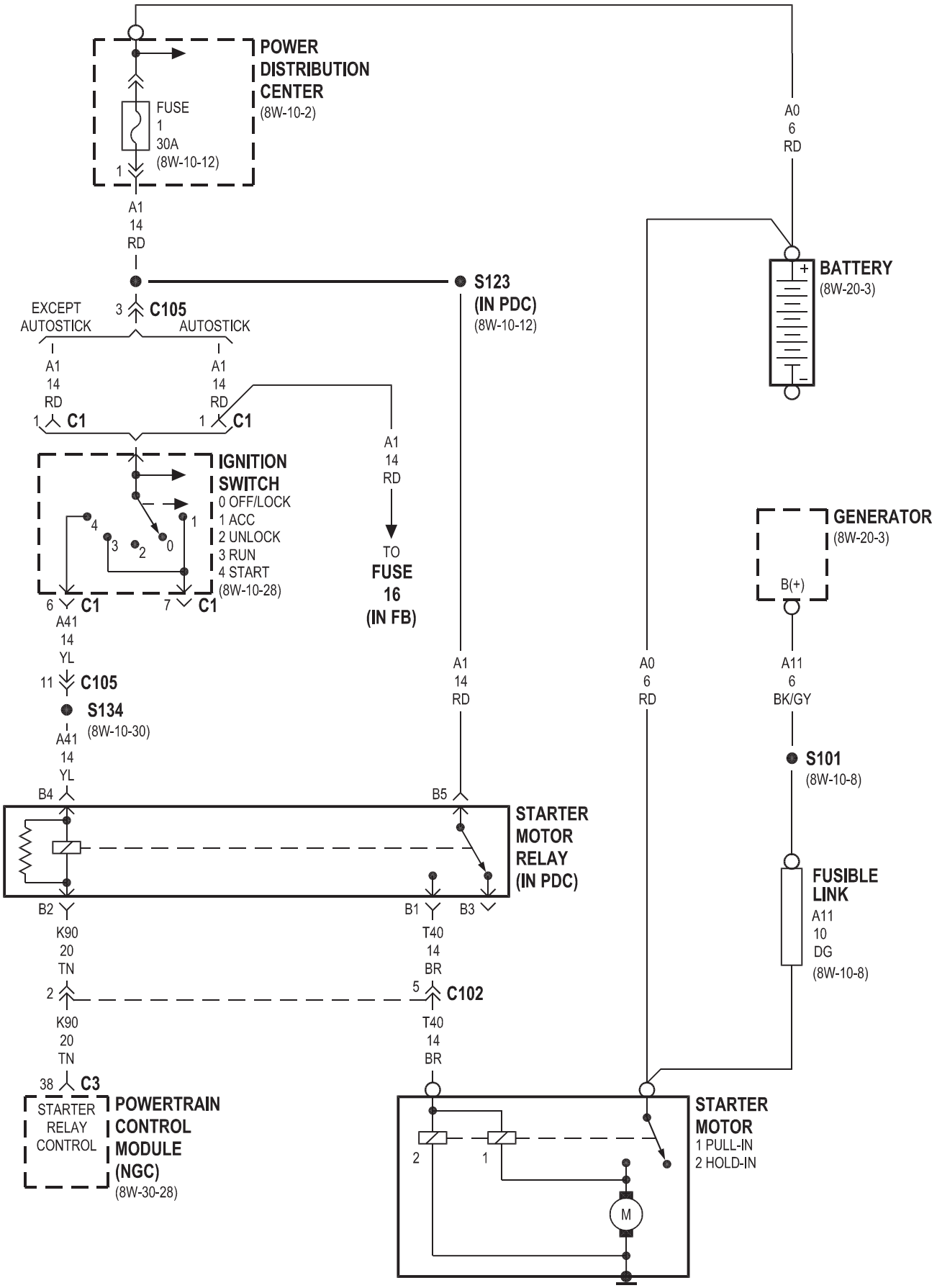
POWER DISTRIBUTION CENTER
(8W-10-2)
FUSE 1 30A
(8W-10-12)
1
A1 14 RD
A0 6 RD
BATTERY
(8W-20-3)
S123
(IN PDC)
(8W-10-12)
EXCEPT AUTOSTICK
3 C105
AUTOSTICK
A1 14 RD
1 C1
IGNITION SWITCH
0 OFF/LOCK
1 ACC
2 UNLOCK
3 RUN
4 START
(8W-10-28)
TO FUSE 16 (IN FB)
GENERATOR
(8W-20-3)
B(+)
6 C1
7 C1
A41 14 YL
11 C105
S134
(8W-10-30)
A11 6 BK/GY
S101
(8W-10-8)
B4
B5
STARTER MOTOR RELAY
(IN PDC)
B2
B1
B3
FUSIBLE LINK
A11 10 DG
(8W-10-8)
K90 20 TN
T40 14 BR
2
5 C102
38 C3
STARTER RELAY CONTROL
POWERTRAIN CONTROL MODULE (NGC)
(8W-30-28)
STARTER MOTOR
1 PULL-IN
2 HOLD-IN
M

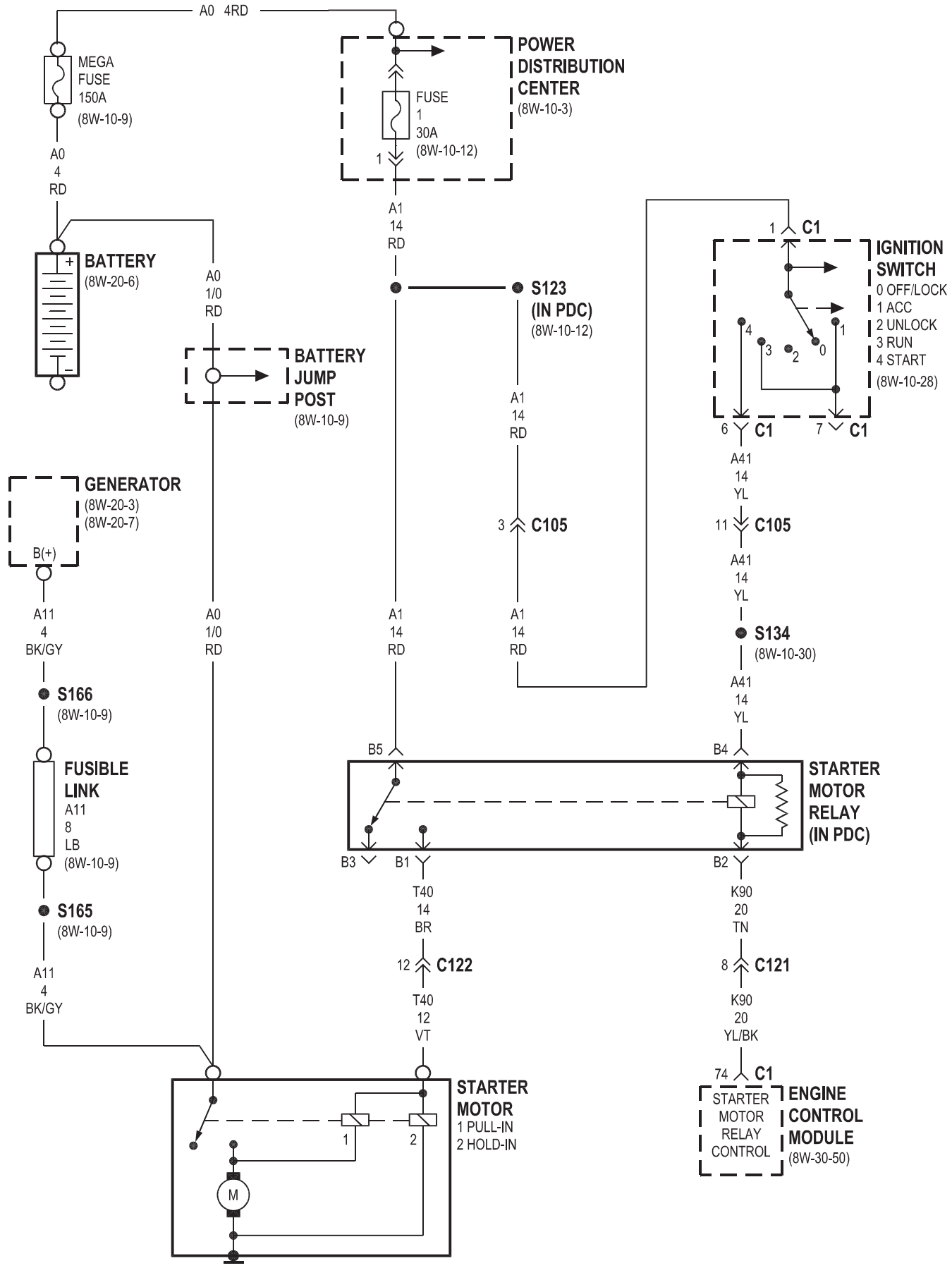
A0 4RD
MEGA FUSE 150A (8W-10-9)
A0 4 RD
BATTERY (8W-20-6)
A0 1/0 RD
BATTERY JUMP POST (8W-10-9)
POWER DISTRIBUTION CENTER (8W-10-3)
FUSE 1 30A (8W-10-12)
1
A1 14 RD
S123 (IN PDC) (8W-10-12)
A1 14 RD
3 C105
A1 14 RD
1 C1
IGNITION SWITCH
0 OFF/LOCK
1 ACC
2 UNLOCK
3 RUN
4 START
(8W-10-28)
6 C1
7 C1
A41 14 YL
11 C105
A41 14 YL
S134 (8W-10-30)
A41 14 YL
GENERATOR (8W-20-3) (8W-20-7)
B(+)
A11 4 BK/GY
S166 (8W-10-9)
FUSIBLE LINK A11 8 LB (8W-10-9)
S165 (8W-10-9)
A11 4 BK/GY
B5
B4
STARTER MOTOR RELAY (IN PDC)
B3
B1
B2
T40 14 BR
12 C122
T40 12 VT
K90 20 TN
8 C121
K90 20 YL/BK
74 C1
STARTER MOTOR RELAY CONTROL
ENGINE CONTROL MODULE (8W-30-50)
STARTER MOTOR
1 PULL-IN
2 HOLD-IN
M

8W-30 FUEL/IGNITION SYSTEM

Component	Page
A/C Compressor Clutch Relay	8W-30-8, 23, 24, 41
A/C High Pressure Switch	8W-30-37
A/C Low Pressure Switch	8W-30-24
A/C Pressure Transducer	8W-30-8, 23, 24
Accelerator Pedal Position Sensor	8W-30-13, 39, 49
Ambient Temperature Sensor-Ngc	8W-30-31
Auto Shut Down Relay	8W-30-2, 3, 4, 15, 35, 36, 38, 39, 40, 41, 43, 46
Autostick Switch	8W-30-34
Battery Jump Post	8W-30-36, 43, 46
Battery Temperature Sensor	8W-30-31, 35
Battery	8W-30-24
Boost Pressure Sensor	8W-30-40
Brake Lamp Switch	8W-30-10, 26, 27, 47, 48
Brake Transmission Shift Interlock Solenoid	8W-30-27
Brake Warning Indicator Switch	8W-30-10, 27, 48
Cabin Heater Relay No. 1	8W-30-46
Cabin Heater Relay No. 2	8W-30-46
Cabin Heater	8W-30-46
Camshaft Position Sensor	8W-30-6, 21, 38
Clockspring	8W-30-26, 31, 35, 47
Clutch Pedal Position Switch	8W-30-11, 28, 50
Controller Antilock Brake	8W-30-10, 12, 27, 29, 48
Crankshaft Position Sensor	8W-30-6, 21, 42
Data Link Connector	8W-30-2, 12, 15, 29, 39
EGR Solenoid	8W-30-40
Electronic Throttle Control Module	8W-30-7
Engine Control Module	8W-30-35, 36, 37, 38, 39, 40, 41, 42, 43, 45, 46, 47, 48, 49, 50
Engine Coolant Temperature Sensor	8W-30-6, 21, 35
Engine Oil Pressure Switch	8W-30-11, 14, 42
EVAP/Purge Solenoid	8W-30-2, 28
Fuel Heater Module	8W-30-43
Fuel Heater Relay	8W-30-43
Fuel Injector No. 1	8W-30-4, 18, 19, 45
Fuel Injector No. 2	8W-30-4, 18, 19, 45
Fuel Injector No. 3	8W-30-4, 18, 19, 45
Fuel Injector No. 4	8W-30-4, 18, 19, 45
Fuel Pressure Sensor	8W-30-42
Fuel Pressure Solenoid	8W-30-38
Fuel Pump Module	8W-30-9, 25, 43, 44
Fuel Pump Relay	8W-30-9, 25, 43
Fuse 9	8W-30-46
Fuse 11	8W-30-2, 9, 14, 25, 30, 50
Fuse 12	8W-30-8, 10, 27, 23, 24, 47, 48
Fuse 13	8W-30-2, 9, 15, 25, 35
Fuse 15	8W-30-32
Fuse 21	8W-30-43
Fuse Block	8W-30-2, 8, 9, 14, 25, 27, 23, 24, 30, 50
Fusible Link	8W-30-24, 43, 46
G102	8W-30-10, 11, 14, 28, 32, 37, 43, 50
G103	8W-30-16, 17, 27, 28, 30, 32, 43, 48, 50
G104	8W-30-9, 25, 26, 27, 28, 23, 24, 44, 48
G106	8W-30-2
G203	8W-30-34
Generator	8W-30-2, 14, 37
Glow Plug No. 1	8W-30-36
Glow Plug No. 2	8W-30-36
Glow Plug No. 3	8W-30-36
Glow Plug No. 4	8W-30-36
Glow Plug Relay	8W-30-36
High Speed Radiator Fan Relay	8W-30-8, 23, 41
Idle Air Control Motor	8W-30-22
Ignition Coil	8W-30-4, 18, 19
Ignition Switch	8W-30-28, 34, 50
Inlet Air Temperature Sensor	8W-30-5, 20, 40
Input Speed Sensor	8W-30-32
Instrument Cluster	8W-30-9, 25, 34, 44
Knock Sensor	8W-30-5, 20
Low Speed Radiator Fan Relay	8W-30-8, 23, 41
Manifold Absolute Pressure Sensor	8W-30-5, 20
Mass Air Flow Sensor	8W-30-39
Natural Vacuum Leak Detection Assembly	8W-30-23, 24
Noise Suppressor	8W-30-3, 18, 19
Output Speed Sensor	8W-30-32
Oxygen Sensor 1/1 Upstream	8W-30-3, 16, 17
Oxygen Sensor 1/2 Downstream	8W-30-3, 16, 17
PCV Heater	8W-30-43
Power Distribution Center	8W-30-2, 9, 10, 15, 25, 27, 32, 35, 43, 46, 47, 48
Power Steering Pressure Switch	8W-30-11, 28
Powertrain Control Module	8W-30-2, 3, 4, 5, 6, 7, 8, 9, 10, 11, 12, 13, 14, 15, 16, 17, 19, 20, 21, 22, 23, 24, 25, 26, 27, 28, 29, 30, 31, 32, 33, 34
Radiator Fan Motor	8W-30-24
Speed Control Servo	8W-30-26, 27
Speed Control Switch	8W-30-26, 47
Starter Motor Relay	8W-30-11, 28, 50
Surge Solenoid	8W-30-30
Swirl Solenoid	8W-30-41
Throttle Inlet Pressure Sensor	8W-30-30
Throttle Inlet Pressure Solenoid	8W-30-30
Throttle Position Sensor	8W-30-20
Transmission Control Relay	8W-30-32
Transmission Range Sensor	8W-30-32, 33
Transmission Solenoid/Pressure Switch Assembly	8W-30-33
Vehicle Speed Sensor	8W-30-7, 22, 40
Wastegate Solenoid	8W-30-30, 41

1.6L

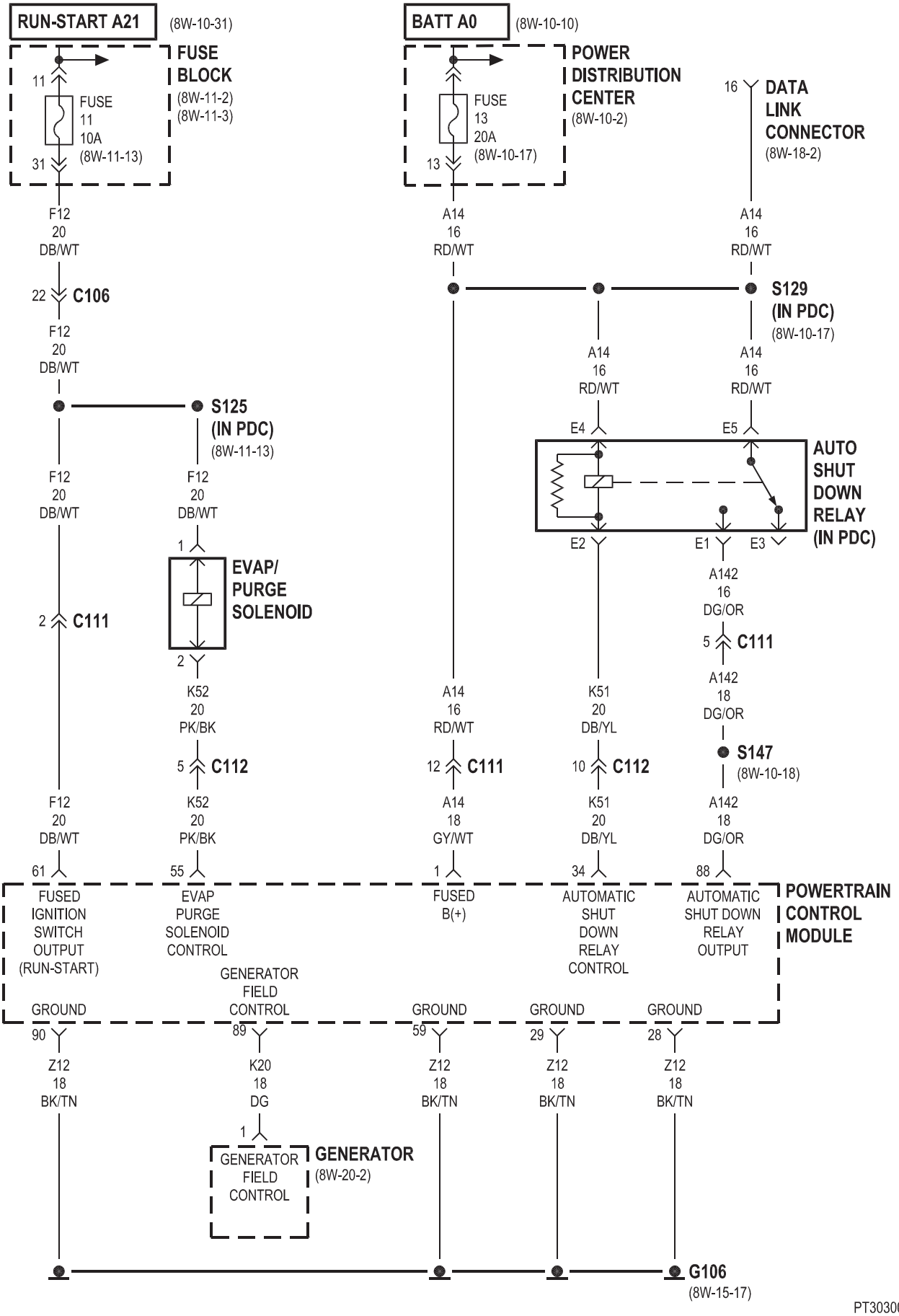
RUN-START A21
(8W-10-31)
FUSE BLOCK
(8W-11-2)
(8W-11-3)
11
FUSE 11 10A
(8W-11-13)
31
F12 20 DB/WT
22
C106
F12 20 DB/WT
S125 (IN PDC)
(8W-11-13)
F12 20 DB/WT
F12 20 DB/WT
1
EVAP/ PURGE SOLENOID
2
C111
2
K52 20 PK/BK
5
C112
F12 20 DB/WT
K52 20 PK/BK
BATT A0
(8W-10-10)
POWER DISTRIBUTION CENTER
(8W-10-2)
FUSE 13 20A
(8W-10-17)
13
A14 16 RD/WT
16
DATA LINK CONNECTOR
(8W-18-2)
A14 16 RD/WT
S129 (IN PDC)
(8W-10-17)
A14 16 RD/WT
A14 16 RD/WT
E4
E5
AUTO SHUT DOWN RELAY (IN PDC)
E2
E1
E3
A142 16 DG/OR
5
C111
A142 18 DG/OR
S147
(8W-10-18)
A14 16 RD/WT
12
C111
A14 18 GY/WT
K51 20 DB/YL
10
C112
K51 20 DB/YL
A142 18 DG/OR
61
55
1
34
88
FUSED IGNITION SWITCH OUTPUT (RUN-START)
EVAP PURGE SOLENOID CONTROL
FUSED B(+)
AUTOMATIC SHUT DOWN RELAY CONTROL
AUTOMATIC SHUT DOWN RELAY OUTPUT
POWERTRAIN CONTROL MODULE
GROUND
GENERATOR FIELD CONTROL
GROUND
GROUND
GROUND
90
89
59
29
28
Z12 18 BK/TN
K20 18 DG
Z12 18 BK/TN
Z12 18 BK/TN
Z12 18 BK/TN
1
GENERATOR FIELD CONTROL
GENERATOR
(8W-20-2)
G106
(8W-15-17)

1.6L

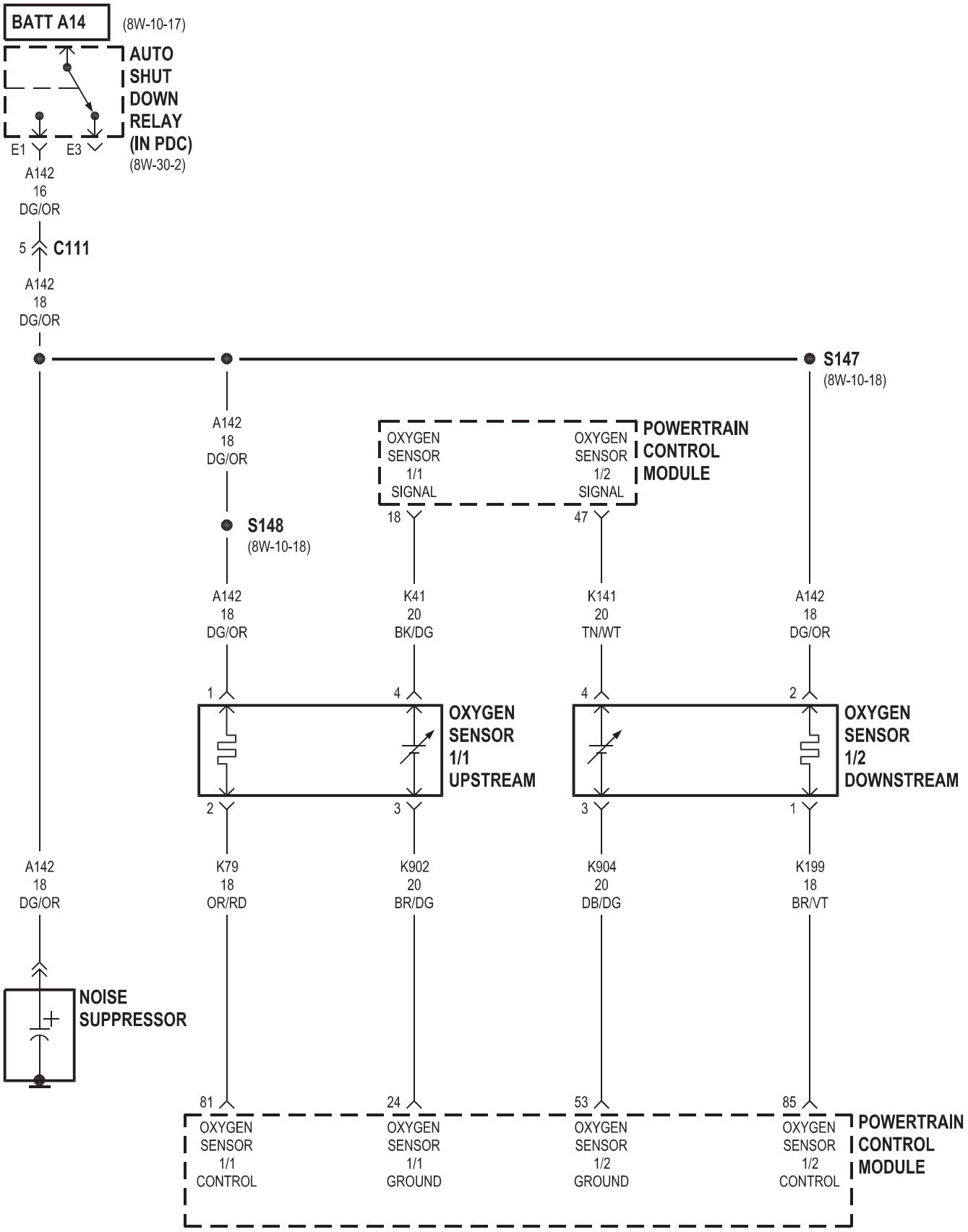
BATT A14
(8W-10-17)
AUTO SHUT DOWN RELAY (IN PDC)
(8W-30-2)
E1
E3
A142
16
DG/OR
5
C111
A142
18
DG/OR
S147
(8W-10-18)
A142
18
DG/OR
S148
(8W-10-18)
OXYGEN SENSOR 1/1 SIGNAL
OXYGEN SENSOR 1/2 SIGNAL
POWERTRAIN CONTROL MODULE
18
47
A142
18
DG/OR
K41
20
BK/DG
K141
20
TN/WT
A142
18
DG/OR
1
4
4
2
OXYGEN SENSOR 1/1 UPSTREAM
OXYGEN SENSOR 1/2 DOWNSTREAM
2
3
3
1
A142
18
DG/OR
K79
18
OR/RD
K902
20
BR/DG
K904
20
DB/DG
K199
18
BR/VT
NOISE SUPPRESSOR
81
24
53
85
OXYGEN SENSOR 1/1 CONTROL
OXYGEN SENSOR 1/1 GROUND
OXYGEN SENSOR 1/2 GROUND
OXYGEN SENSOR 1/2 CONTROL
POWERTRAIN CONTROL MODULE

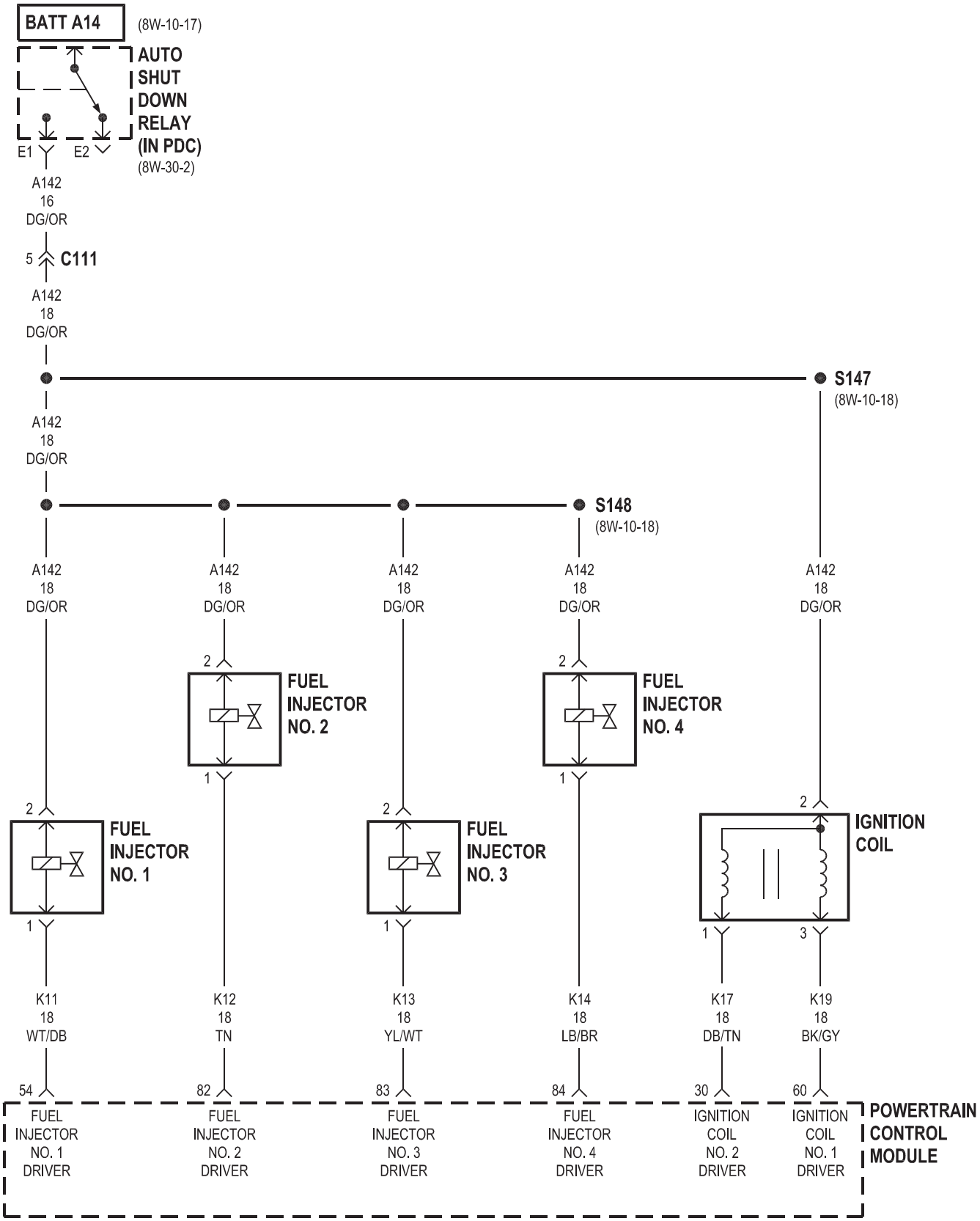
BATT A14
(8W-10-17)
AUTO SHUT DOWN RELAY (IN PDC)
(8W-30-2)
E1
E2
A142 16 DG/OR
5
C111
A142 18 DG/OR
S147
(8W-10-18)
A142 18 DG/OR
S148
(8W-10-18)
A142 18 DG/OR
A142 18 DG/OR
A142 18 DG/OR
A142 18 DG/OR
A142 18 DG/OR
2
FUEL INJECTOR NO. 2
1
2
FUEL INJECTOR NO. 4
1
2
FUEL INJECTOR NO. 1
1
2
FUEL INJECTOR NO. 3
1
2
IGNITION COIL
1
3
K11 18 WT/DB
K12 18 TN
K13 18 YL/WT
K14 18 LB/BR
K17 18 DB/TN
K19 18 BK/GY
54
82
83
84
30
60
FUEL INJECTOR NO. 1 DRIVER
FUEL INJECTOR NO. 2 DRIVER
FUEL INJECTOR NO. 3 DRIVER
FUEL INJECTOR NO. 4 DRIVER
IGNITION COIL NO. 2 DRIVER
IGNITION COIL NO. 1 DRIVER
POWERTRAIN CONTROL MODULE

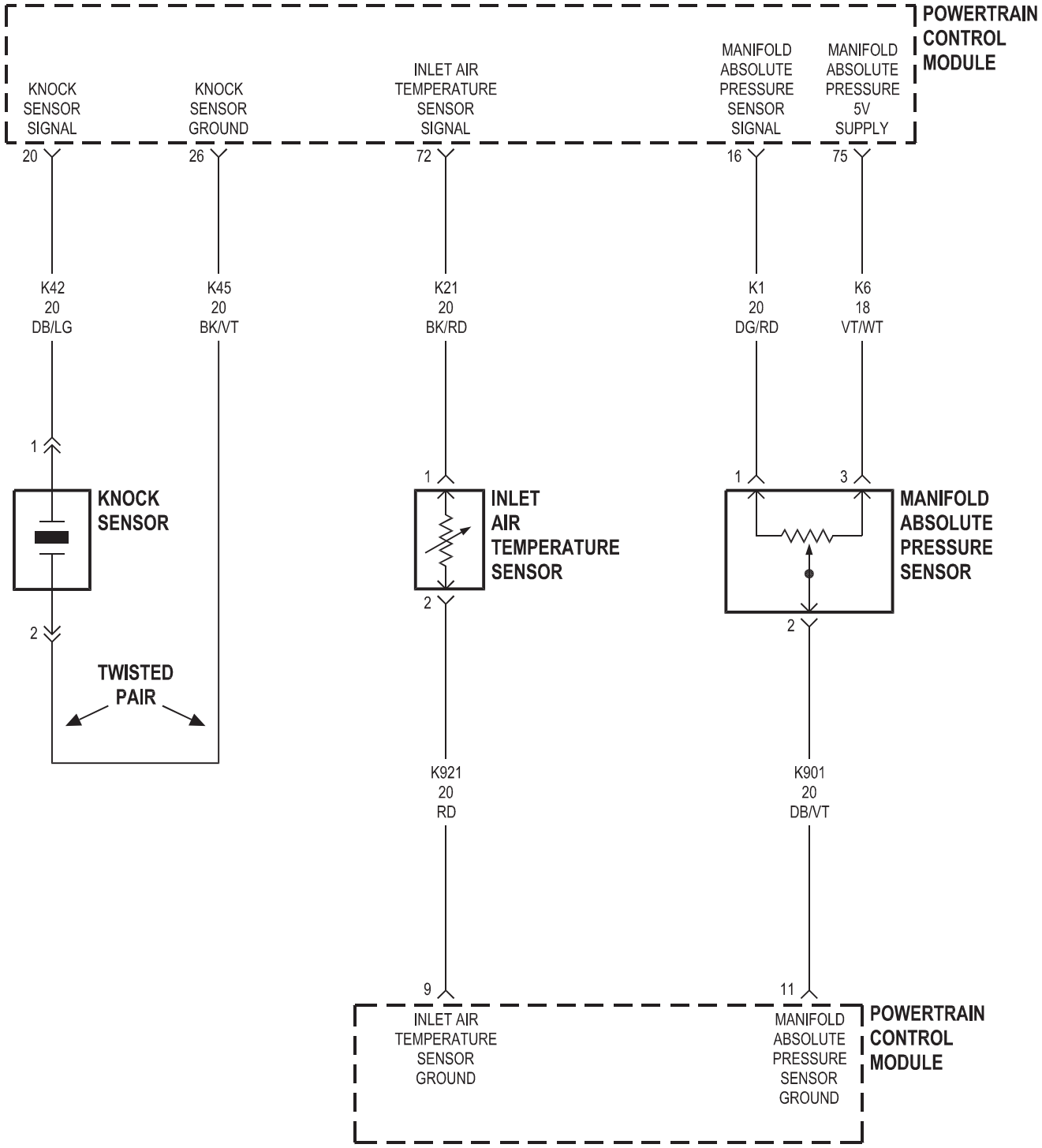
POWERTRAIN CONTROL MODULE
KNOCK SENSOR SIGNAL
KNOCK SENSOR GROUND
INLET AIR TEMPERATURE SENSOR SIGNAL
MANIFOLD ABSOLUTE PRESSURE SENSOR SIGNAL
MANIFOLD ABSOLUTE PRESSURE 5V SUPPLY
20
26
72
16
75
K42 20 DB/LG
K45 20 BK/VT
K21 20 BK/RD
K1 20 DG/RD
K6 18 VT/WT
1
2
KNOCK SENSOR
TWISTED PAIR
1
2
INLET AIR TEMPERATURE SENSOR
1
3
2
MANIFOLD ABSOLUTE PRESSURE SENSOR
K921 20 RD
K901 20 DB/VT
9
11
INLET AIR TEMPERATURE SENSOR GROUND
MANIFOLD ABSOLUTE PRESSURE SENSOR GROUND
POWERTRAIN CONTROL MODULE

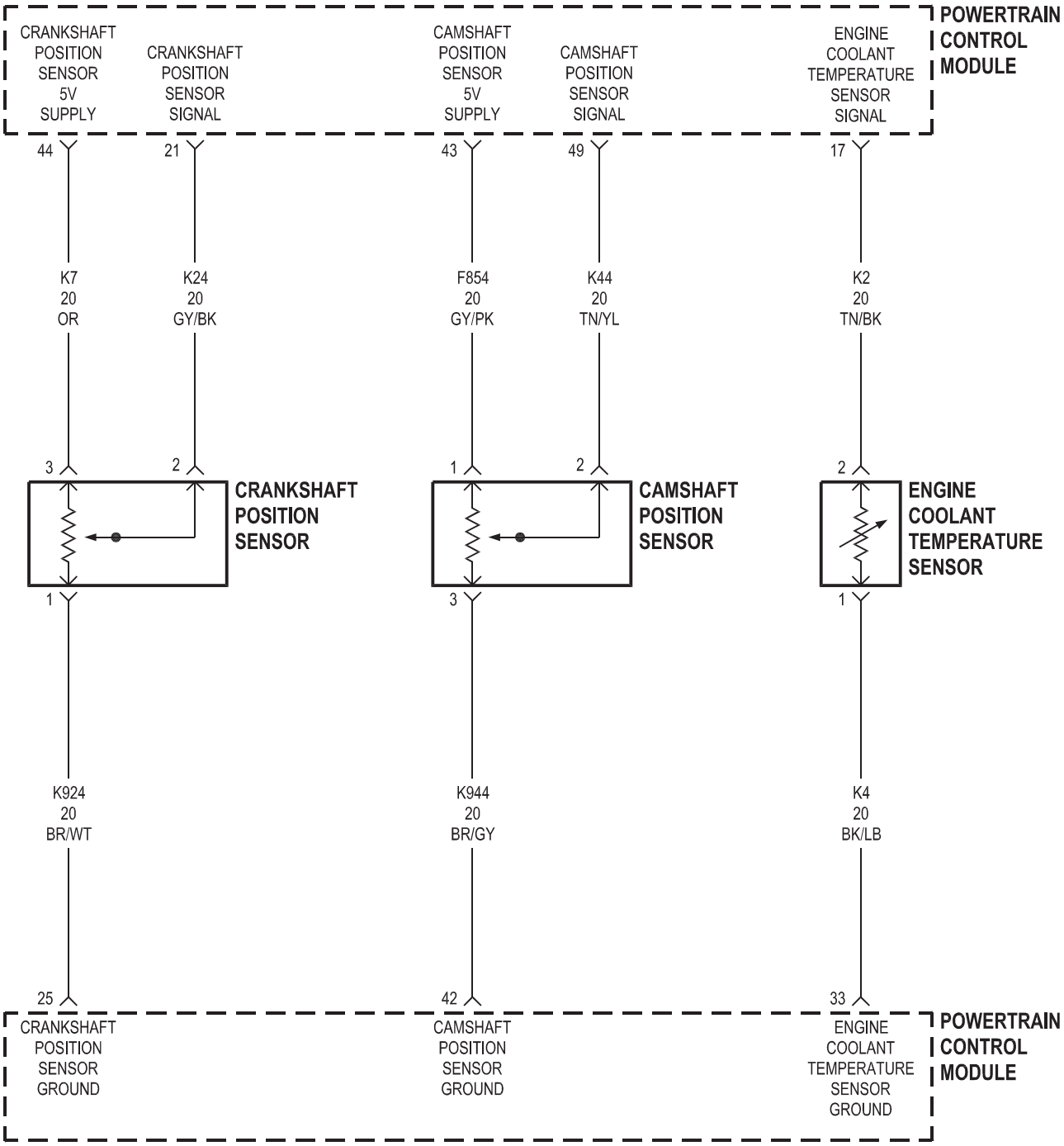
POWERTRAIN CONTROL MODULE
CRANKSHAFT POSITION SENSOR 5V SUPPLY
CRANKSHAFT POSITION SENSOR SIGNAL
CAMSHAFT POSITION SENSOR 5V SUPPLY
CAMSHAFT POSITION SENSOR SIGNAL
ENGINE COOLANT TEMPERATURE SENSOR SIGNAL
44
21
43
49
17
K7 20 OR
K24 20 GY/BK
F854 20 GY/PK
K44 20 TN/YL
K2 20 TN/BK
3
2
1
2
2
CRANKSHAFT POSITION SENSOR
CAMSHAFT POSITION SENSOR
ENGINE COOLANT TEMPERATURE SENSOR
1
3
1
K924 20 BR/WT
K944 20 BR/GY
K4 20 BK/LB
25
42
33
CRANKSHAFT POSITION SENSOR GROUND
CAMSHAFT POSITION SENSOR GROUND
ENGINE COOLANT TEMPERATURE SENSOR GROUND
POWERTRAIN CONTROL MODULE

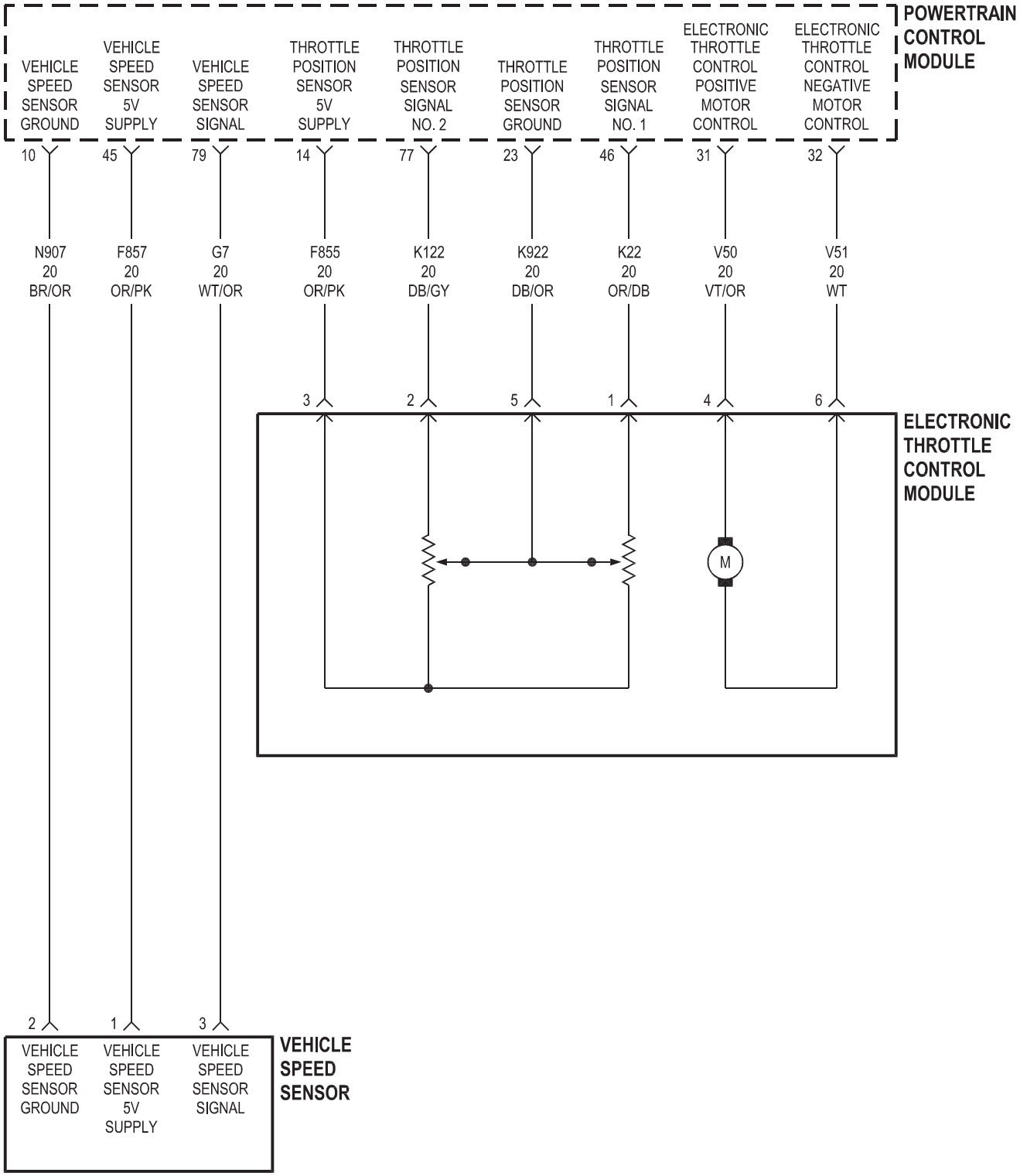
POWERTRAIN CONTROL MODULE
VEHICLE SPEED SENSOR GROUND
VEHICLE SPEED SENSOR 5V SUPPLY
VEHICLE SPEED SENSOR SIGNAL
THROTTLE POSITION SENSOR 5V SUPPLY
THROTTLE POSITION SENSOR SIGNAL NO. 2
THROTTLE POSITION SENSOR GROUND
THROTTLE POSITION SENSOR SIGNAL NO. 1
ELECTRONIC THROTTLE CONTROL POSITIVE MOTOR CONTROL
ELECTRONIC THROTTLE CONTROL NEGATIVE MOTOR CONTROL
10
45
79
14
77
23
46
31
32
N907 20 BR/OR
F857 20 OR/PK
G7 20 WT/OR
F855 20 OR/PK
K122 20 DB/GY
K922 20 DB/OR
K22 20 OR/DB
V50 20 VT/OR
V51 20 WT
3
2
5
1
4
6
ELECTRONIC THROTTLE CONTROL MODULE
M
2
1
3
VEHICLE SPEED SENSOR GROUND
VEHICLE SPEED SENSOR 5V SUPPLY
VEHICLE SPEED SENSOR SIGNAL
VEHICLE SPEED SENSOR

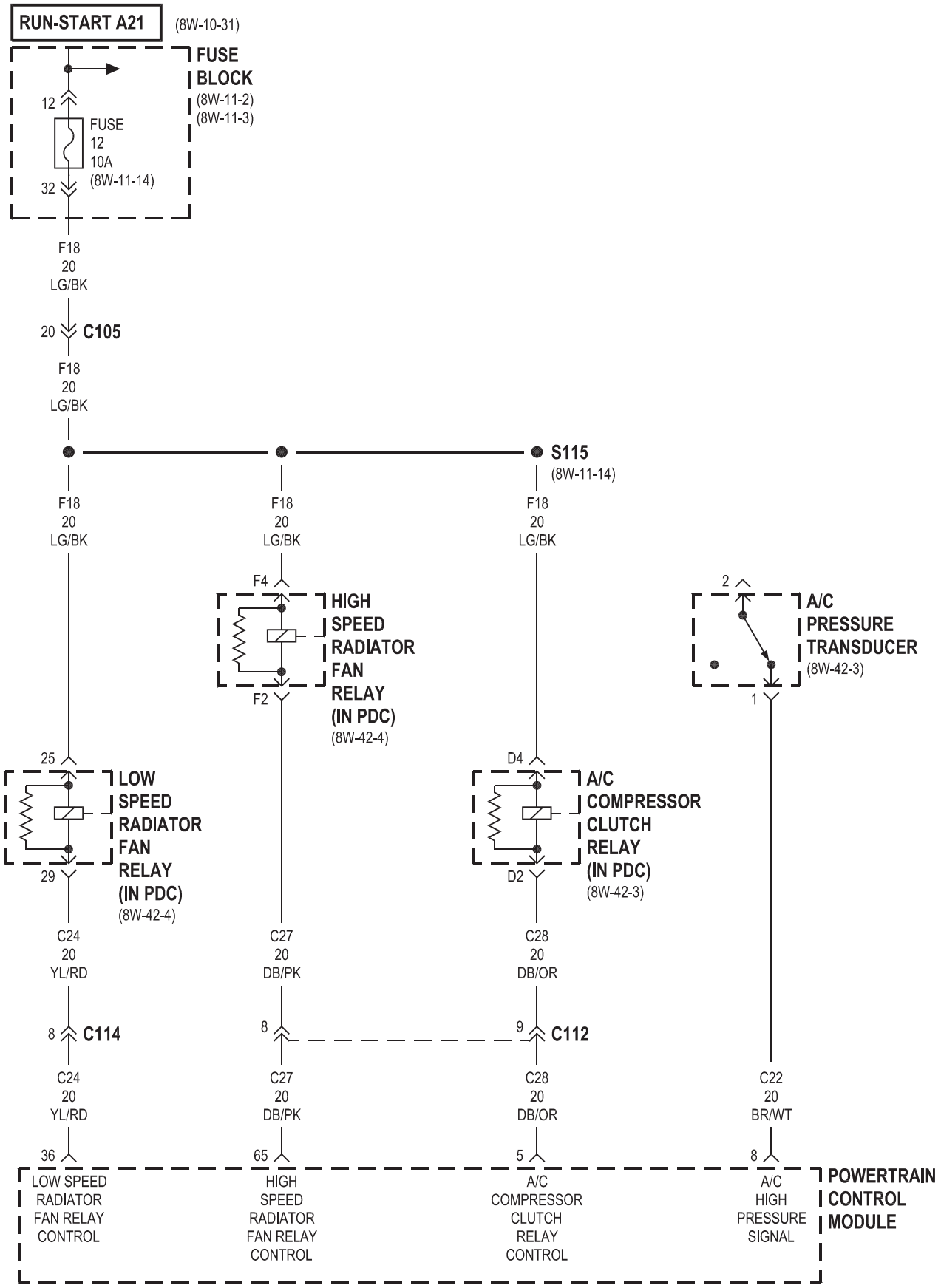
RUN-START A21
(8W-10-31)
FUSE BLOCK
(8W-11-2)
(8W-11-3)
12
FUSE 12 10A
(8W-11-14)
32
F18 20 LG/BK
20
C105
F18 20 LG/BK
S115
(8W-11-14)
F18 20 LG/BK
F18 20 LG/BK
F18 20 LG/BK
F4
HIGH SPEED RADIATOR FAN RELAY (IN PDC)
(8W-42-4)
F2
2
A/C PRESSURE TRANSDUCER
(8W-42-3)
1
25
LOW SPEED RADIATOR FAN RELAY (IN PDC)
(8W-42-4)
29
D4
A/C COMPRESSOR CLUTCH RELAY (IN PDC)
(8W-42-3)
D2
C24 20 YL/RD
C27 20 DB/PK
C28 20 DB/OR
8
C114
8
9
C112
C24 20 YL/RD
C27 20 DB/PK
C28 20 DB/OR
C22 20 BR/WT
36
65
5
8
LOW SPEED RADIATOR FAN RELAY CONTROL
HIGH SPEED RADIATOR FAN RELAY CONTROL
A/C COMPRESSOR CLUTCH RELAY CONTROL
A/C HIGH PRESSURE SIGNAL
POWERTRAIN CONTROL MODULE

1.6L

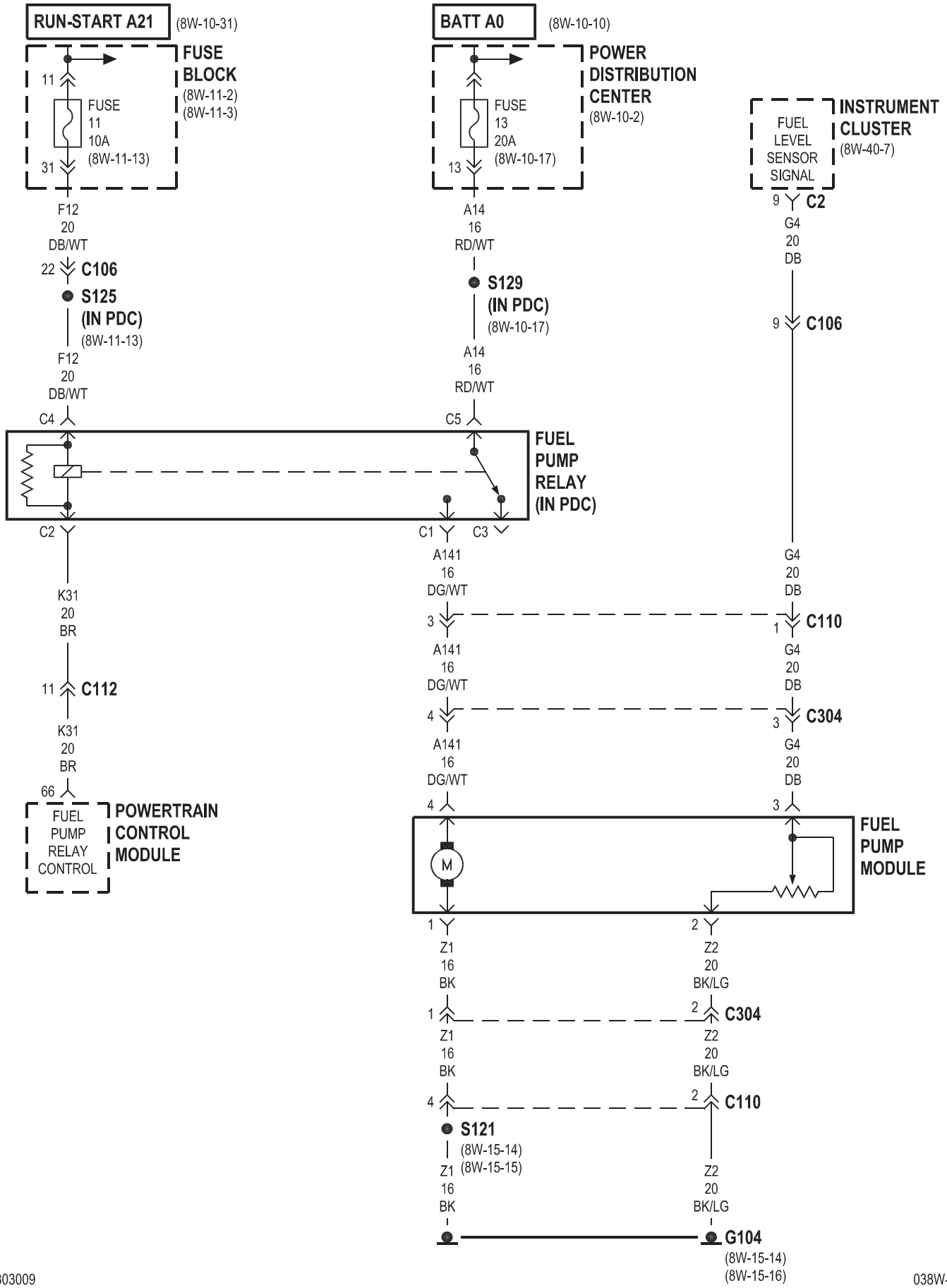
RUN-START A21
(8W-10-31)
FUSE BLOCK
(8W-11-2)
(8W-11-3)
11
FUSE 11 10A
(8W-11-13)
31
F12 20 DB/WT
22
C106
S125
(IN PDC)
(8W-11-13)
F12 20 DB/WT
C4
C2
K31 20 BR
11
C112
K31 20 BR
66
FUEL PUMP RELAY CONTROL
POWERTRAIN CONTROL MODULE
BATT A0
(8W-10-10)
POWER DISTRIBUTION CENTER
(8W-10-2)
FUSE 13 20A
(8W-10-17)
13
A14 16 RD/WT
S129
(IN PDC)
(8W-10-17)
A14 16 RD/WT
C5
FUEL PUMP RELAY (IN PDC)
C1
C3
A141 16 DG/WT
3
A141 16 DG/WT
4
A141 16 DG/WT
4
INSTRUMENT CLUSTER
(8W-40-7)
FUEL LEVEL SENSOR SIGNAL
9
C2
G4 20 DB
9
C106
G4 20 DB
1
C110
G4 20 DB
3
C304
G4 20 DB
3
FUEL PUMP MODULE
M
1
Z1 16 BK
2
Z2 20 BK/LG
1
C304
Z1 16 BK
2
Z2 20 BK/LG
4
C110
2
S121
(8W-15-14)
(8W-15-15)
Z1 16 BK
Z2 20 BK/LG
G104
(8W-15-14)
(8W-15-16)

1.6L

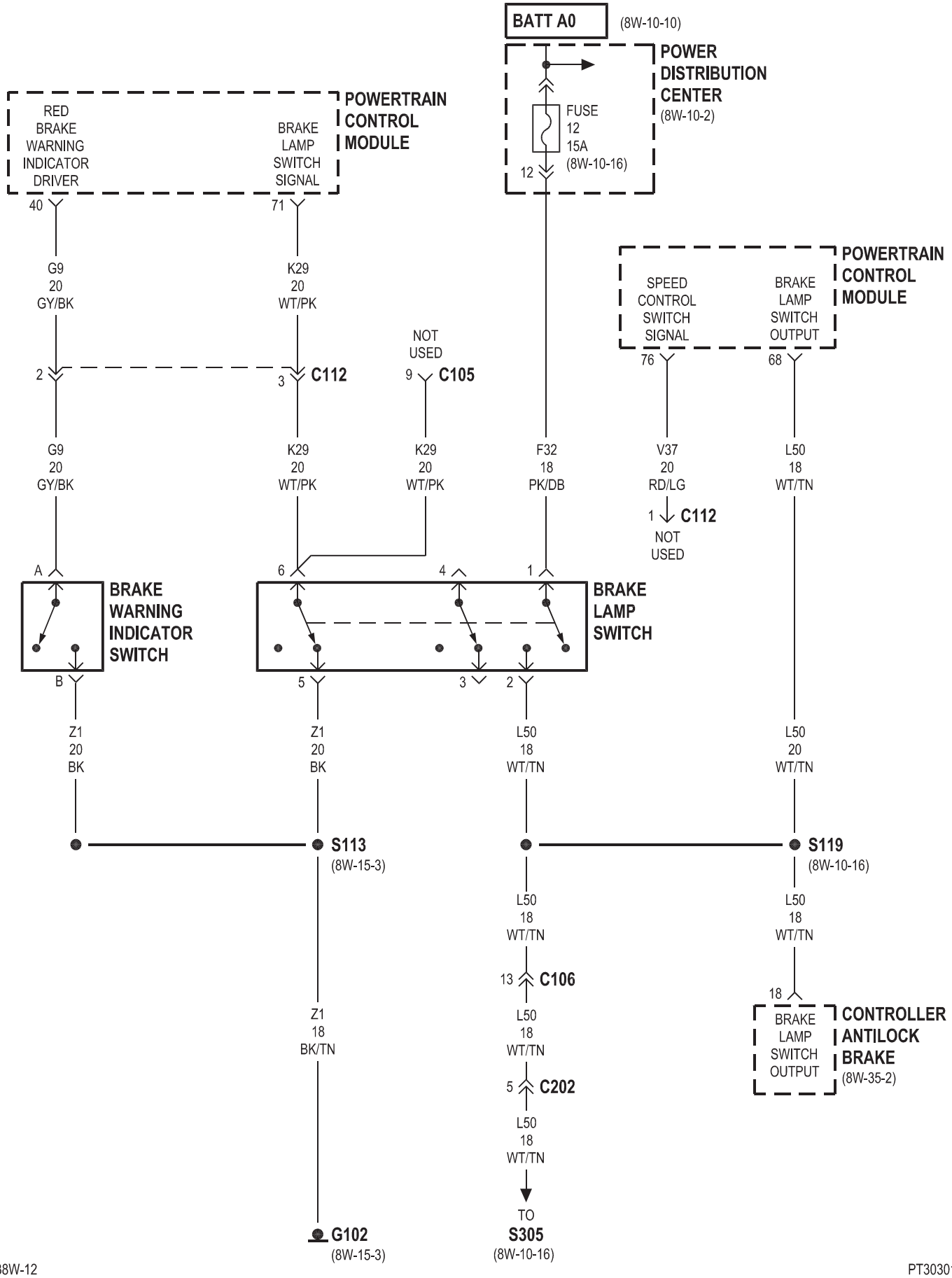
BATT A0
(8W-10-10)
POWER DISTRIBUTION CENTER
(8W-10-2)
FUSE 12 15A
(8W-10-16)
12
POWERTRAIN CONTROL MODULE
RED BRAKE WARNING INDICATOR DRIVER
BRAKE LAMP SWITCH SIGNAL
40
71
G9 20 GY/BK
K29 20 WT/PK
2
3
C112
NOT USED
9
C105
POWERTRAIN CONTROL MODULE
SPEED CONTROL SWITCH SIGNAL
BRAKE LAMP SWITCH OUTPUT
76
68
G9 20 GY/BK
K29 20 WT/PK
K29 20 WT/PK
F32 18 PK/DB
V37 20 RD/LG
L50 18 WT/TN
1
C112
NOT USED
A
6
4
1
BRAKE WARNING INDICATOR SWITCH
BRAKE LAMP SWITCH
B
5
3
2
Z1 20 BK
Z1 20 BK
L50 18 WT/TN
L50 20 WT/TN
S113
(8W-15-3)
S119
(8W-10-16)
L50 18 WT/TN
L50 18 WT/TN
13
C106
18
Z1 18 BK/TN
L50 18 WT/TN
5
C202
L50 18 WT/TN
BRAKE LAMP SWITCH OUTPUT
CONTROLLER ANTILOCK BRAKE
(8W-35-2)
TO
G102
(8W-15-3)
S305
(8W-10-16)

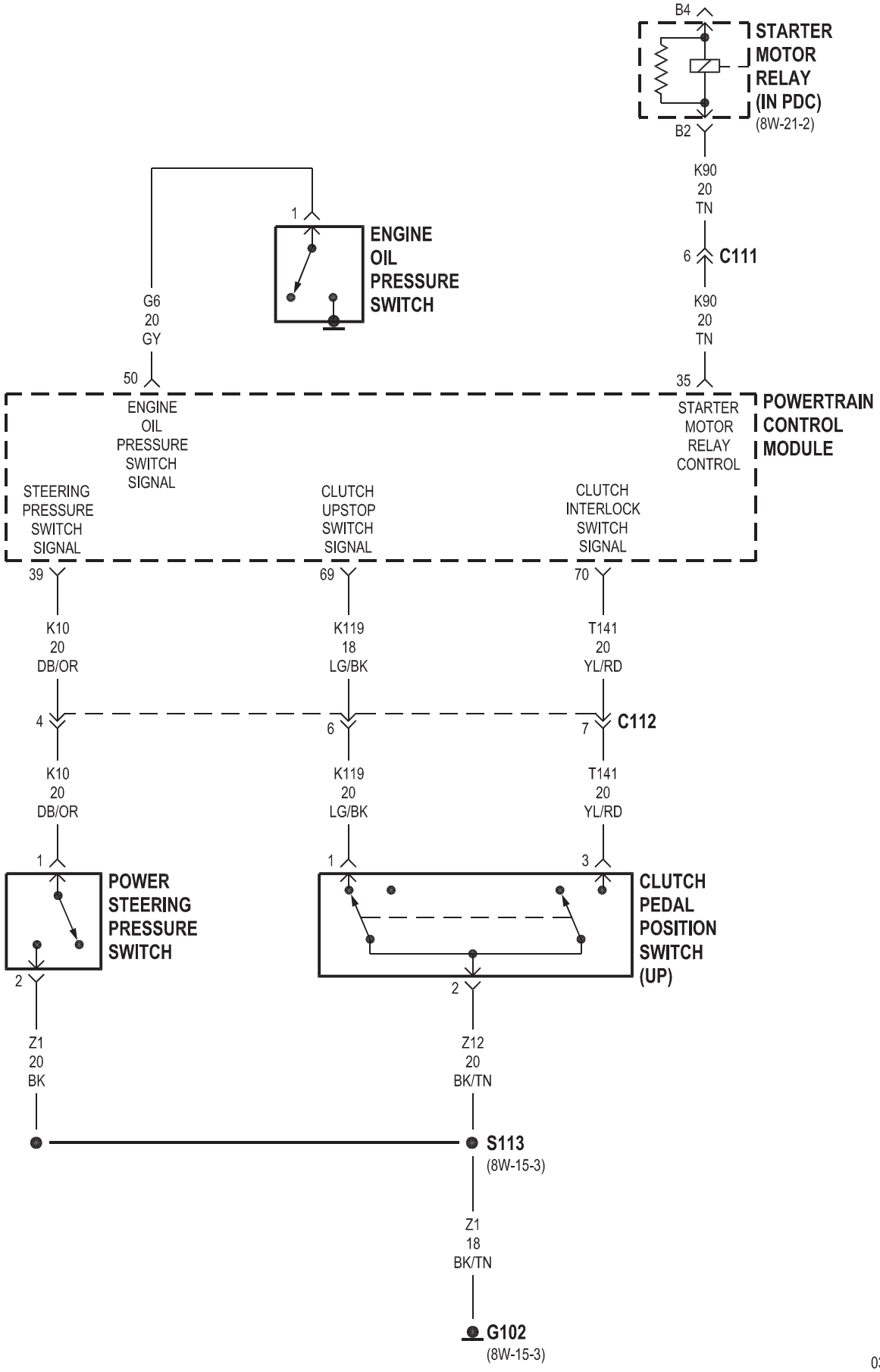
B4
STARTER MOTOR RELAY (IN PDC)
(8W-21-2)
B2
K90
20
TN
6
C111
K90
20
TN
35
1
ENGINE OIL PRESSURE SWITCH
G6
20
GY
50
ENGINE OIL PRESSURE SWITCH SIGNAL
STARTER MOTOR RELAY CONTROL
POWERTRAIN CONTROL MODULE
STEERING PRESSURE SWITCH SIGNAL
CLUTCH UPSTOP SWITCH SIGNAL
CLUTCH INTERLOCK SWITCH SIGNAL
39
69
70
K10
20
DB/OR
K119
18
LG/BK
T141
20
YL/RD
4
6
7
C112
K10
20
DB/OR
K119
20
LG/BK
T141
20
YL/RD
1
1
3
POWER STEERING PRESSURE SWITCH
CLUTCH PEDAL POSITION SWITCH (UP)
2
2
Z1
20
BK
Z12
20
BK/TN
S113
(8W-15-3)
Z1
18
BK/TN
G102
(8W-15-3)

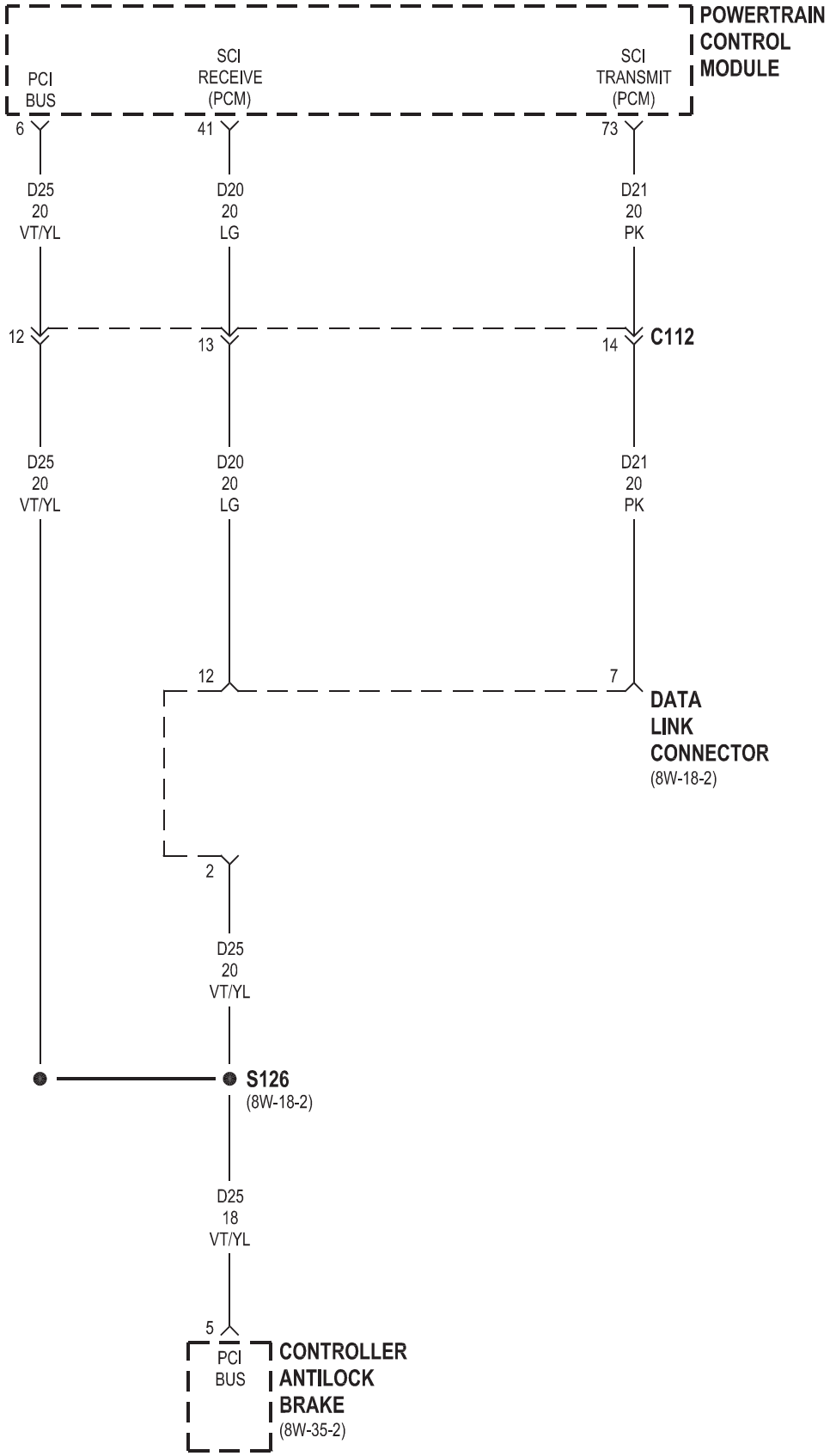
POWERTRAIN CONTROL MODULE
PCI BUS
SCI RECEIVE (PCM)
SCI TRANSMIT (PCM)
6
41
73
D25 20 VT/YL
D20 20 LG
D21 20 PK
12
13
14
C112
D25 20 VT/YL
D20 20 LG
D21 20 PK
12
7
DATA LINK CONNECTOR
(8W-18-2)
2
D25 20 VT/YL
S126
(8W-18-2)
D25 18 VT/YL
5
PCI BUS
CONTROLLER ANTILOCK BRAKE
(8W-35-2)

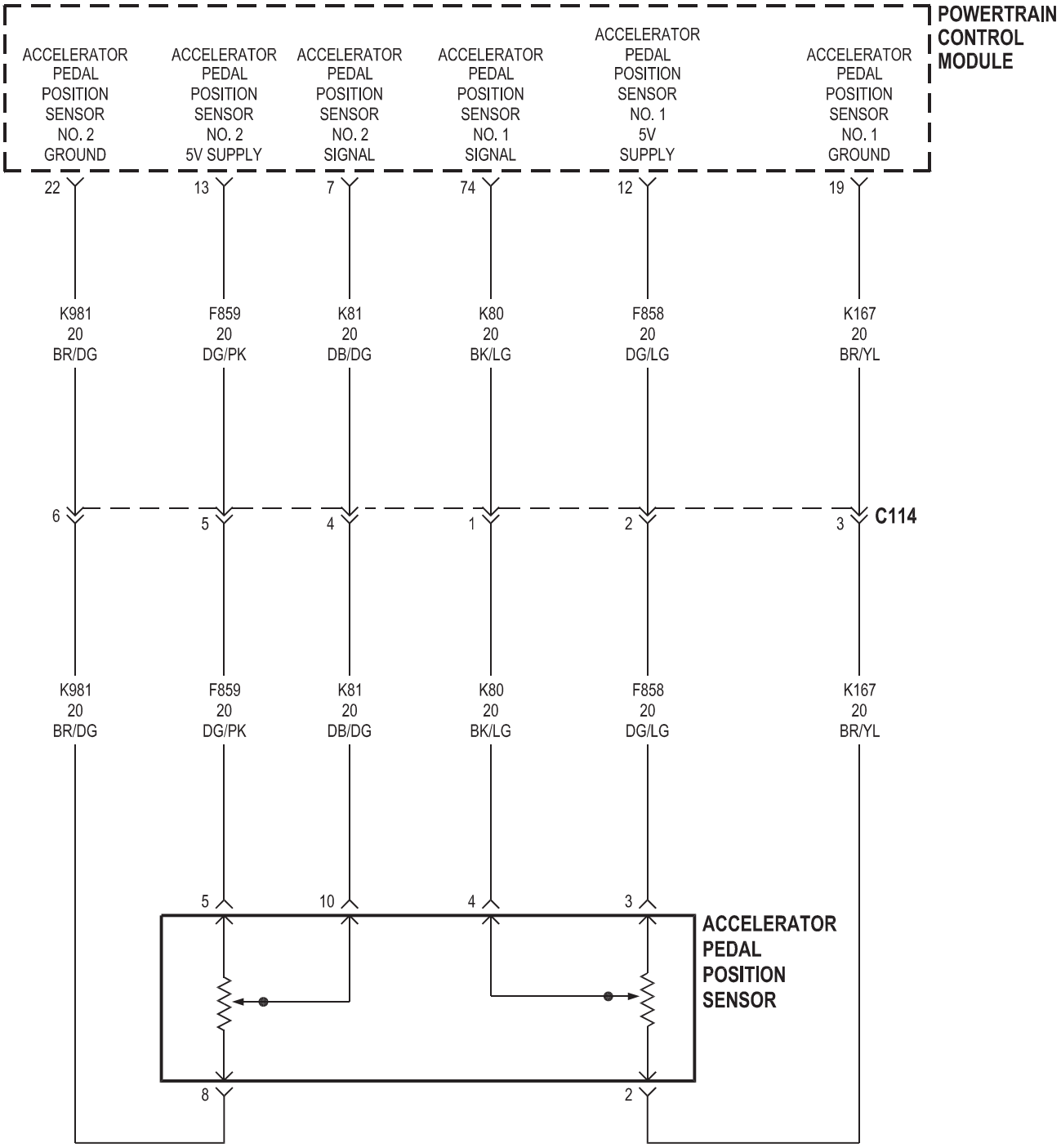
POWERTRAIN CONTROL MODULE
ACCELERATOR PEDAL POSITION SENSOR NO. 2 GROUND
ACCELERATOR PEDAL POSITION SENSOR NO. 2 5V SUPPLY
ACCELERATOR PEDAL POSITION SENSOR NO. 2 SIGNAL
ACCELERATOR PEDAL POSITION SENSOR NO. 1 SIGNAL
ACCELERATOR PEDAL POSITION SENSOR NO. 1 5V SUPPLY
ACCELERATOR PEDAL POSITION SENSOR NO. 1 GROUND
22
13
7
74
12
19
K981 20 BR/DG
F859 20 DG/PK
K81 20 DB/DG
K80 20 BK/LG
F858 20 DG/LG
K167 20 BR/YL
6
5
4
1
2
3
C114
K981 20 BR/DG
F859 20 DG/PK
K81 20 DB/DG
K80 20 BK/LG
F858 20 DG/LG
K167 20 BR/YL
5
10
4
3
ACCELERATOR PEDAL POSITION SENSOR
8
2

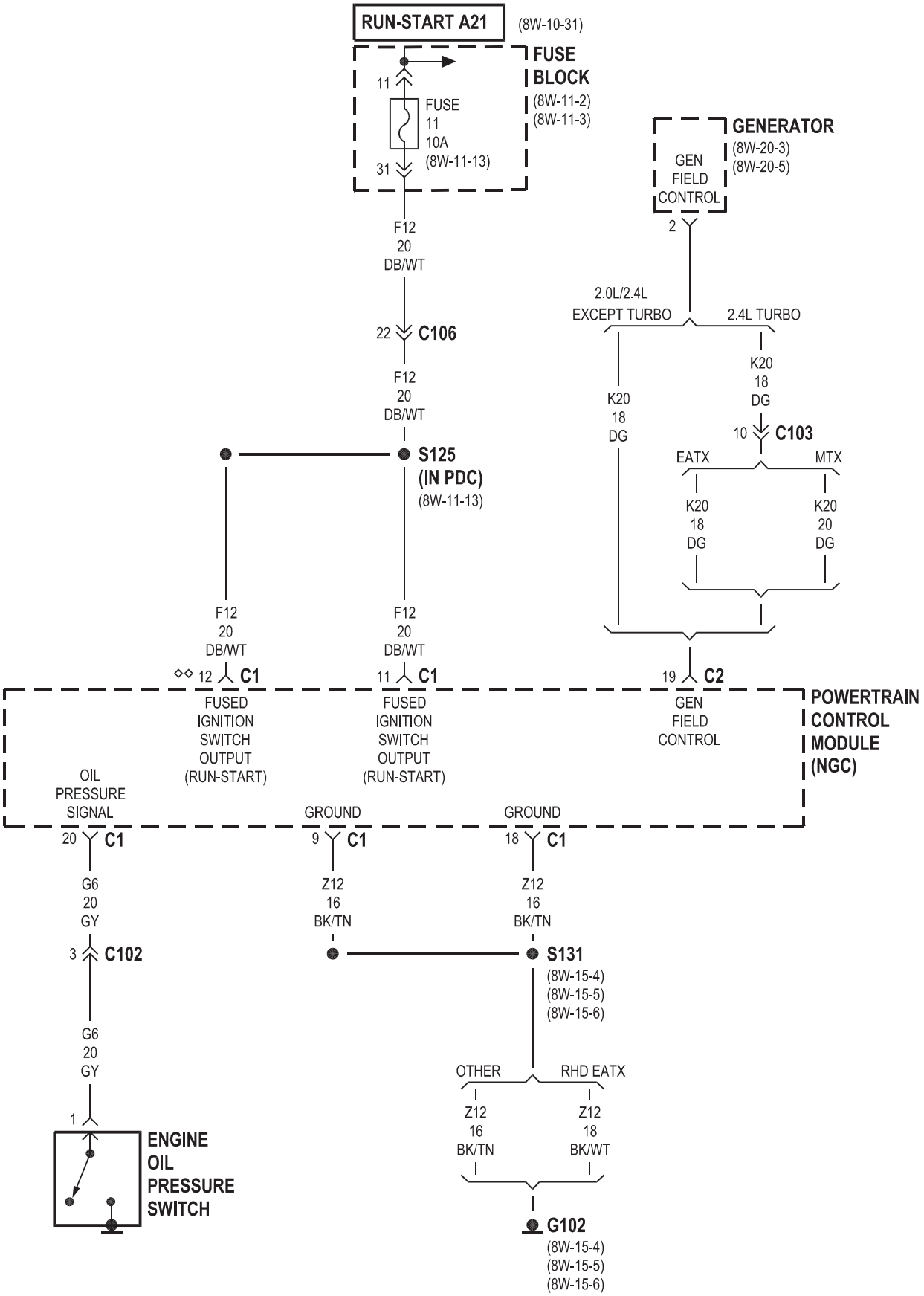

◇◇ EXCEPT AUTOSTICK

2.0L/2.4L

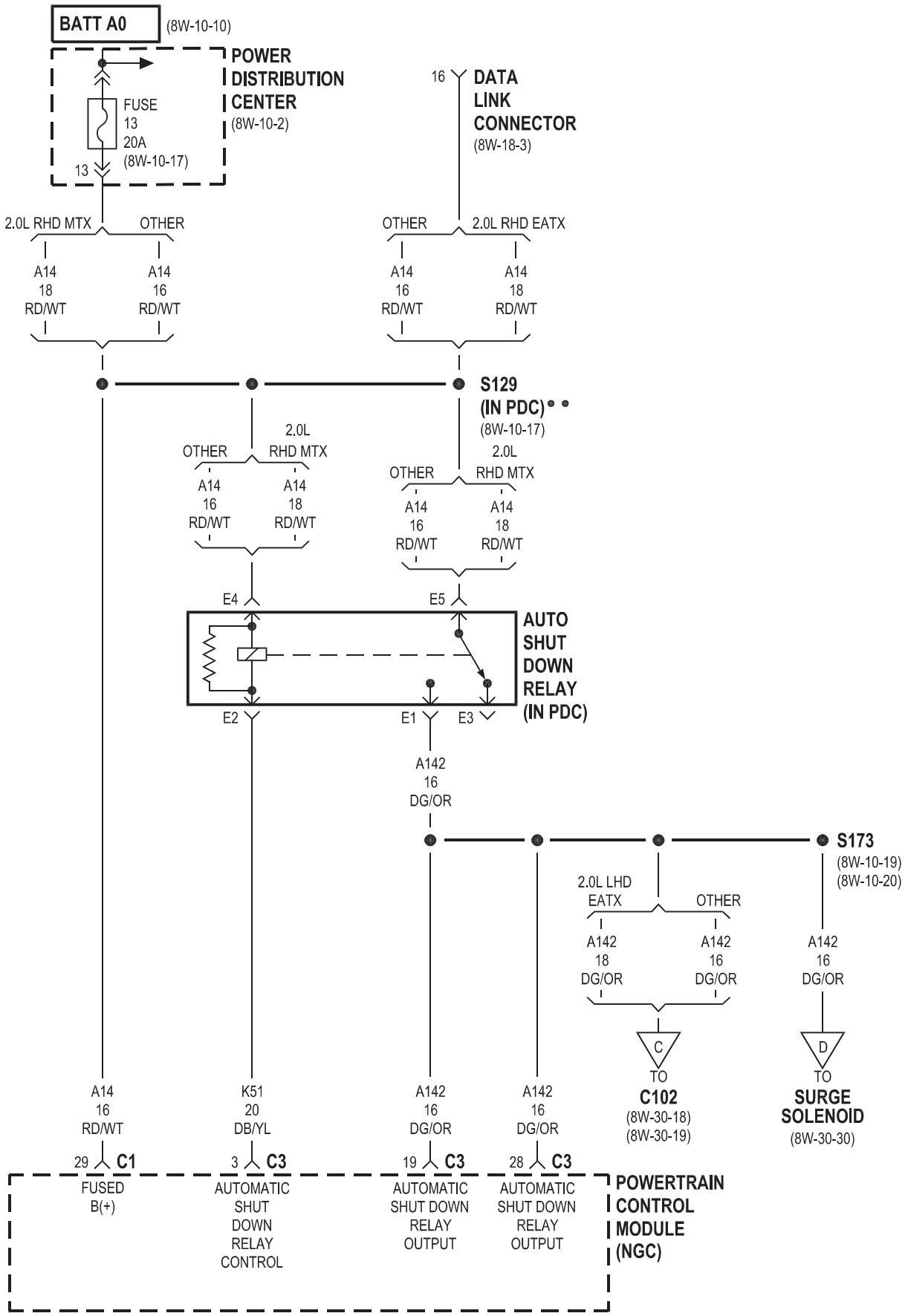
BATT A0
(8W-10-10)
POWER DISTRIBUTION CENTER
(8W-10-2)
FUSE 13 20A
(8W-10-17)
13
16
DATA LINK CONNECTOR
(8W-18-3)
2.0L RHD MTX
OTHER
A14 18 RD/WT
A14 16 RD/WT
OTHER
2.0L RHD EATX
A14 16 RD/WT
A14 18 RD/WT
S129
(IN PDC)
(8W-10-17)
OTHER
2.0L RHD MTX
A14 16 RD/WT
A14 18 RD/WT
OTHER
2.0L RHD MTX
A14 16 RD/WT
A14 18 RD/WT
E4
E5
AUTO SHUT DOWN RELAY (IN PDC)
E2
E1
E3
A142 16 DG/OR
S173
(8W-10-19)
(8W-10-20)
2.0L LHD EATX
OTHER
A142 18 DG/OR
A142 16 DG/OR
A142 16 DG/OR
C
TO
C102
(8W-30-18)
(8W-30-19)
D
TO
SURGE SOLENOID
(8W-30-30)
A14 16 RD/WT
K51 20 DB/YL
A142 16 DG/OR
A142 16 DG/OR
29 C1
3 C3
19 C3
28 C3
FUSED B(+)
AUTOMATIC SHUT DOWN RELAY CONTROL
AUTOMATIC SHUT DOWN RELAY OUTPUT
AUTOMATIC SHUT DOWN RELAY OUTPUT
POWERTRAIN CONTROL MODULE (NGC)

•• RHD

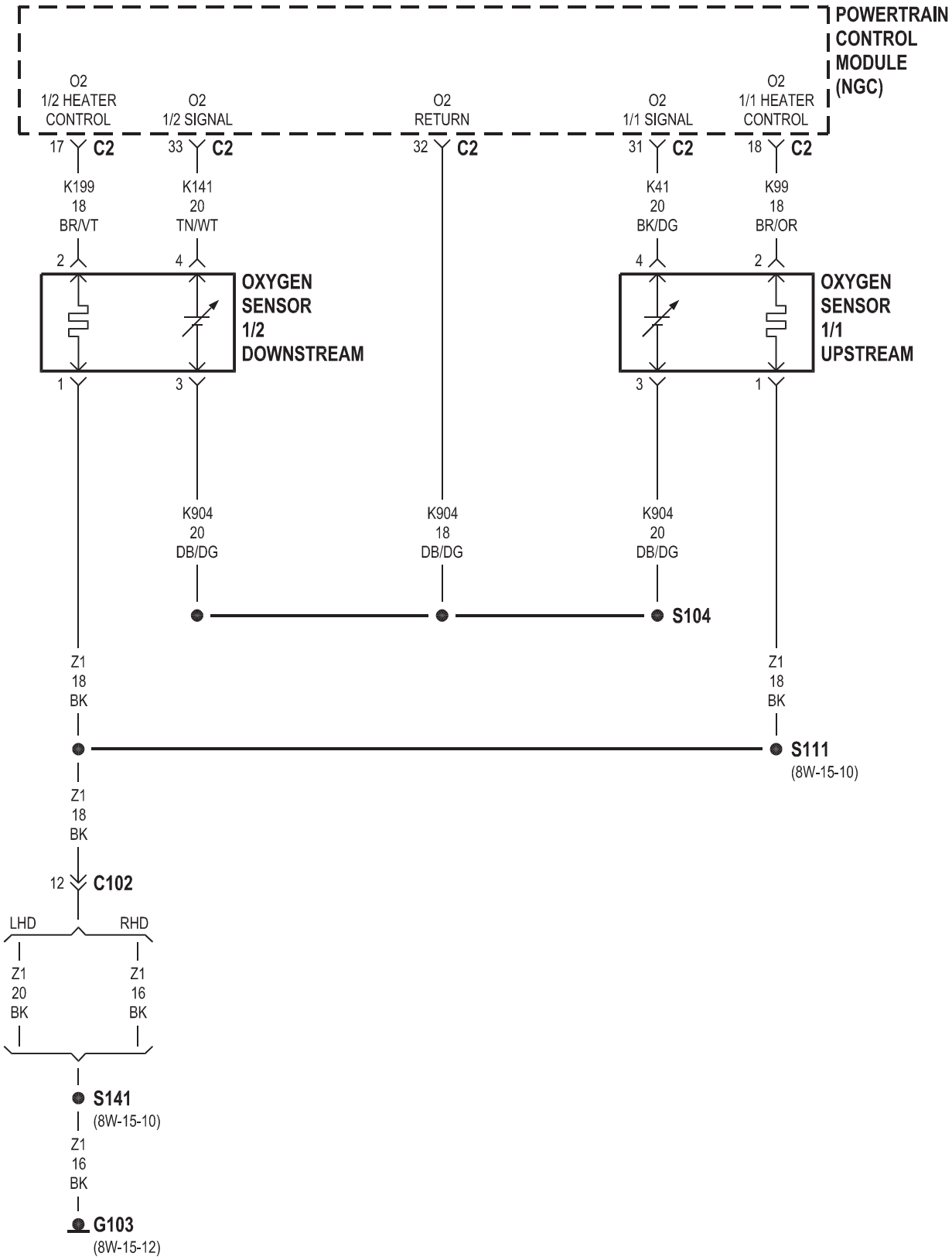
POWERTRAIN CONTROL MODULE (NGC)
O2 1/2 HEATER CONTROL
O2 1/2 SIGNAL
O2 RETURN
O2 1/1 SIGNAL
O2 1/1 HEATER CONTROL
17 C2
33 C2
32 C2
31 C2
18 C2
K199 18 BR/VT
K141 20 TN/WT
K41 20 BK/DG
K99 18 BR/OR
2
4
4
2
OXYGEN SENSOR 1/2 DOWNSTREAM
OXYGEN SENSOR 1/1 UPSTREAM
1
3
3
1
K904 20 DB/DG
K904 18 DB/DG
K904 20 DB/DG
S104
Z1 18 BK
Z1 18 BK
S111
(8W-15-10)
Z1 18 BK
12 C102
LHD
RHD
Z1 20 BK
Z1 16 BK
S141
(8W-15-10)
Z1 16 BK
G103
(8W-15-12)

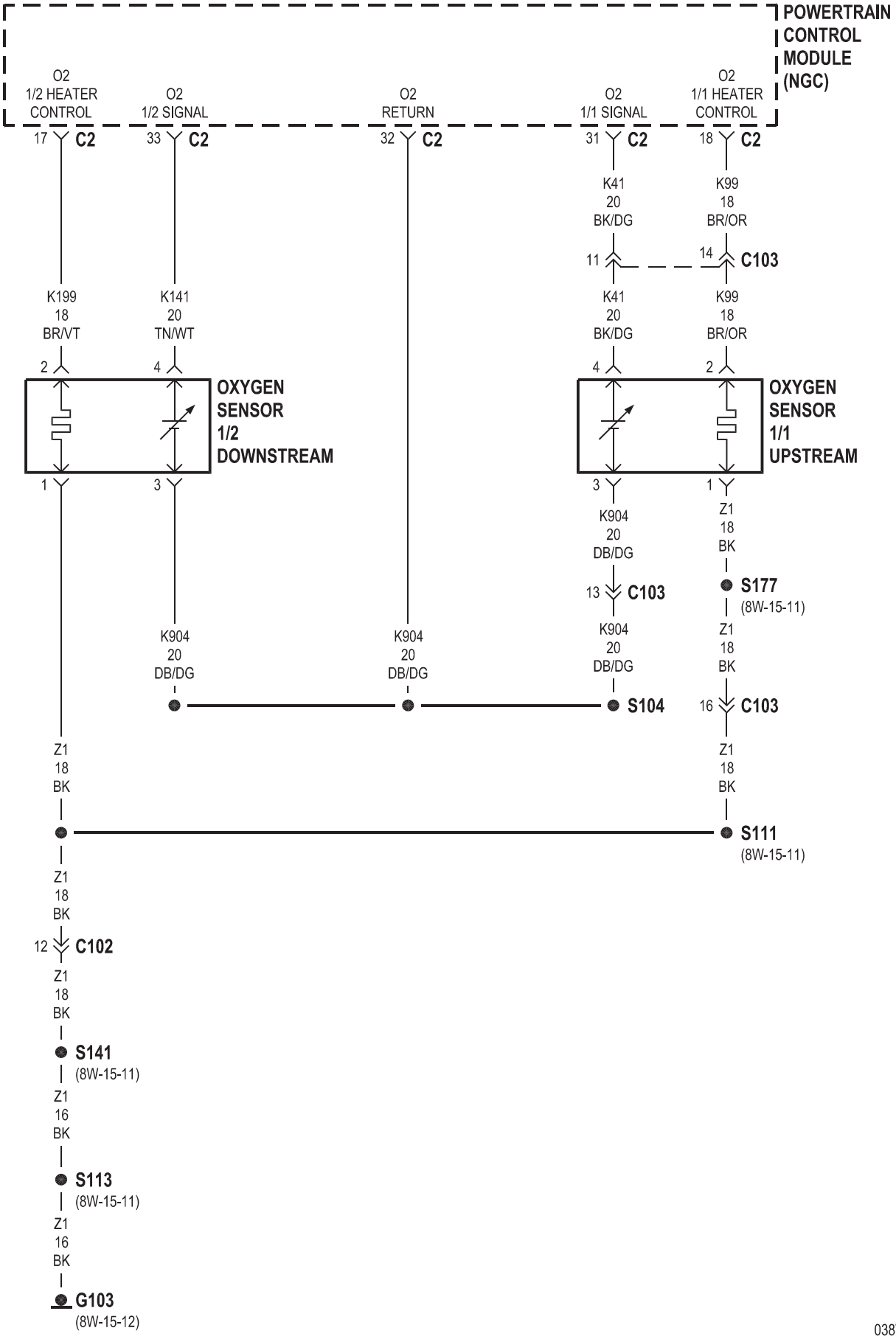
POWERTRAIN CONTROL MODULE (NGC)
O2 1/2 HEATER CONTROL
O2 1/2 SIGNAL
O2 RETURN
O2 1/1 SIGNAL
O2 1/1 HEATER CONTROL
17 C2
33 C2
32 C2
31 C2
18 C2
K41 20 BK/DG
K99 18 BR/OR
11
14 C103
K199 18 BR/VT
K141 20 TN/WT
K41 20 BK/DG
K99 18 BR/OR
2
4
4
2
OXYGEN SENSOR 1/2 DOWNSTREAM
OXYGEN SENSOR 1/1 UPSTREAM
1
3
3
1
K904 20 DB/DG
Z1 18 BK
13 C103
S177 (8W-15-11)
K904 20 DB/DG
K904 20 DB/DG
K904 20 DB/DG
Z1 18 BK
S104
16 C103
Z1 18 BK
Z1 18 BK
S111 (8W-15-11)
Z1 18 BK
12 C102
Z1 18 BK
S141 (8W-15-11)
Z1 16 BK
S113 (8W-15-11)
Z1 16 BK
G103 (8W-15-12)

2.0L/2.4L EXCEPT TURBO

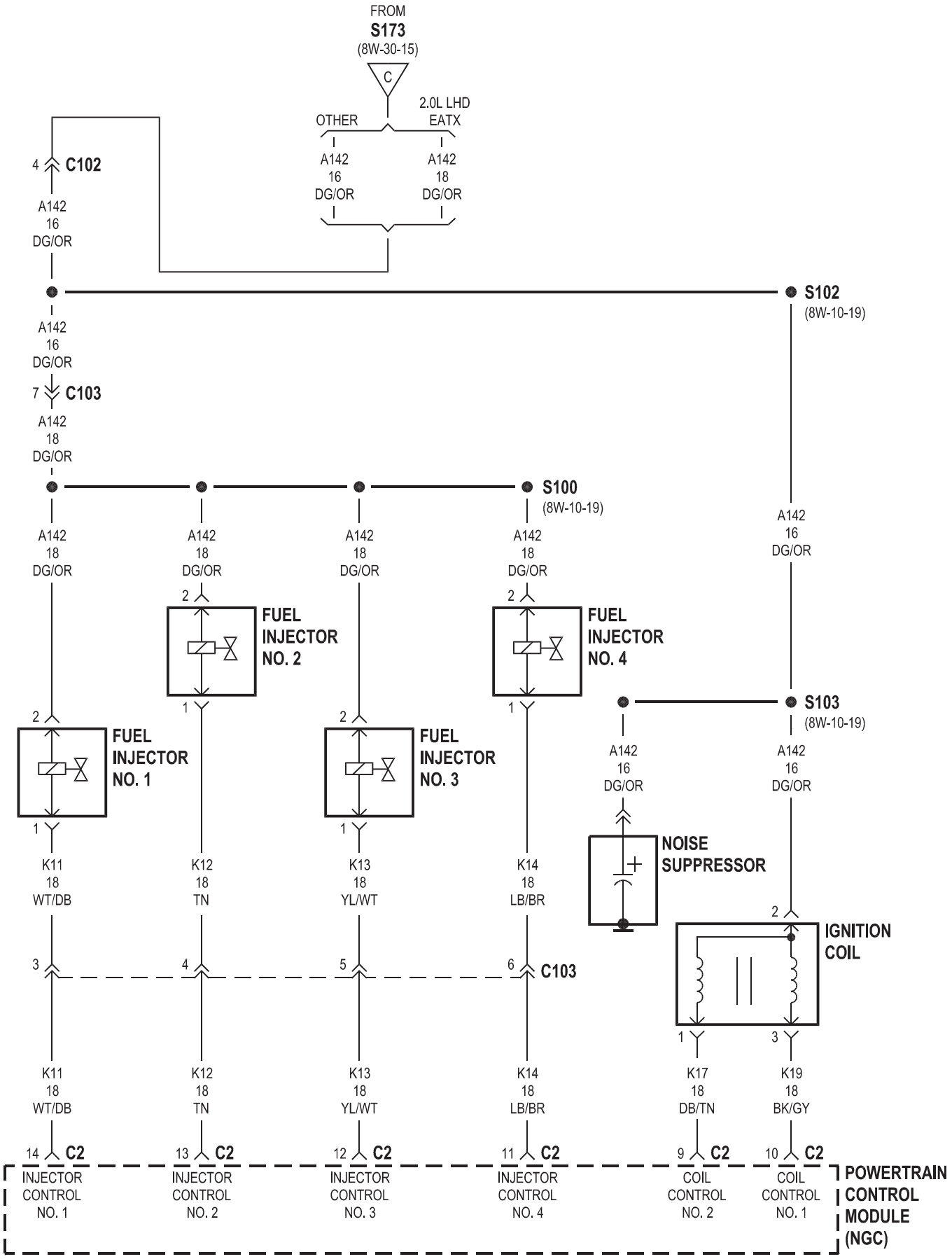

2.4L TURBO

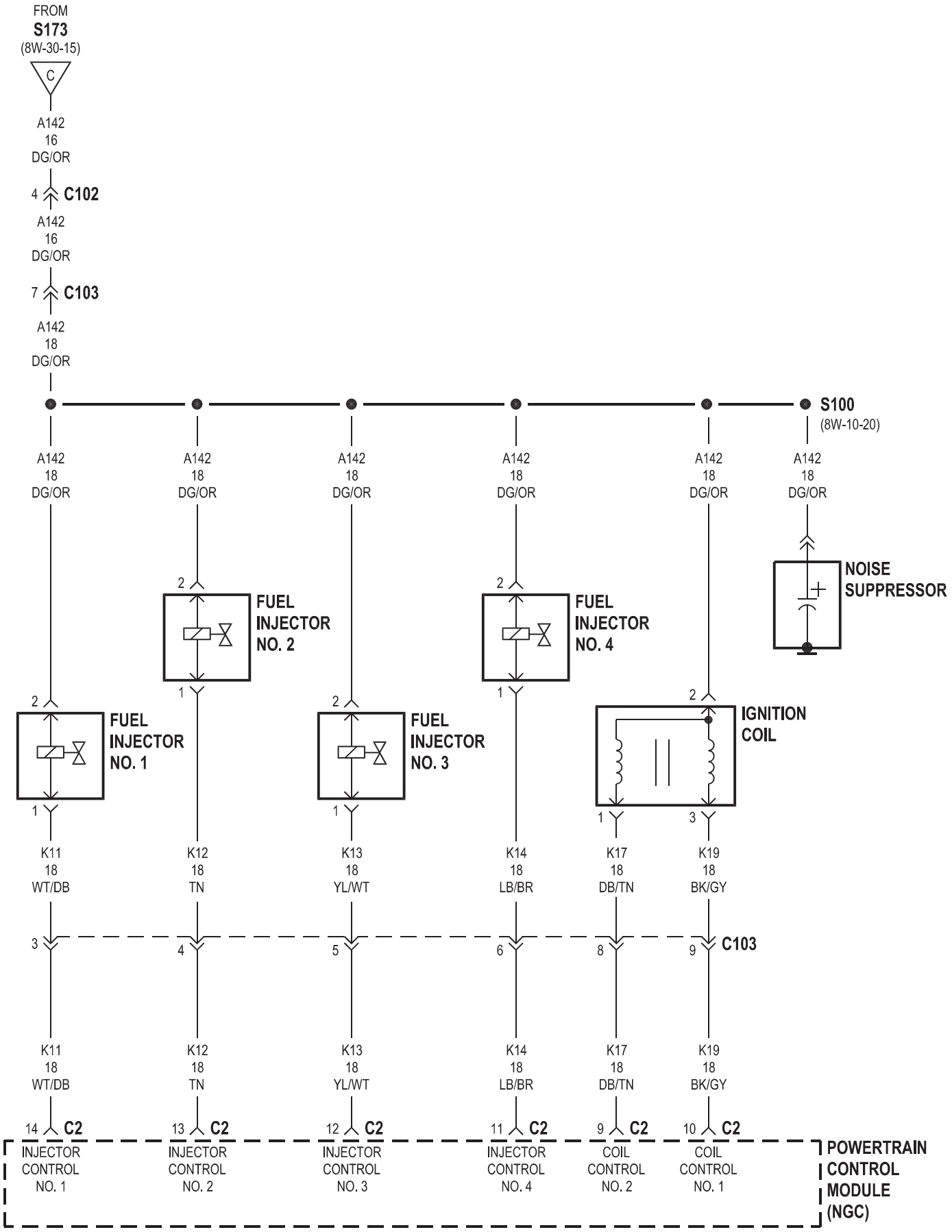
FROM
S173
(8W-30-15)
C
A142
16
DG/OR
4
C102
A142
16
DG/OR
7
C103
A142
18
DG/OR
S100
(8W-10-20)
A142
18
DG/OR
NOISE
SUPPRESSOR
FUEL
INJECTOR
NO. 2
FUEL
INJECTOR
NO. 4
FUEL
INJECTOR
NO. 1
FUEL
INJECTOR
NO. 3
IGNITION
COIL
K11
18
WT/DB
K12
18
TN
K13
18
YL/WT
K14
18
LB/BR
K17
18
DB/TN
K19
18
BK/GY
C103
C2
INJECTOR
CONTROL
NO. 1
INJECTOR
CONTROL
NO. 2
INJECTOR
CONTROL
NO. 3
INJECTOR
CONTROL
NO. 4
COIL
CONTROL
NO. 2
COIL
CONTROL
NO. 1
POWERTRAIN
CONTROL
MODULE
(NGC)

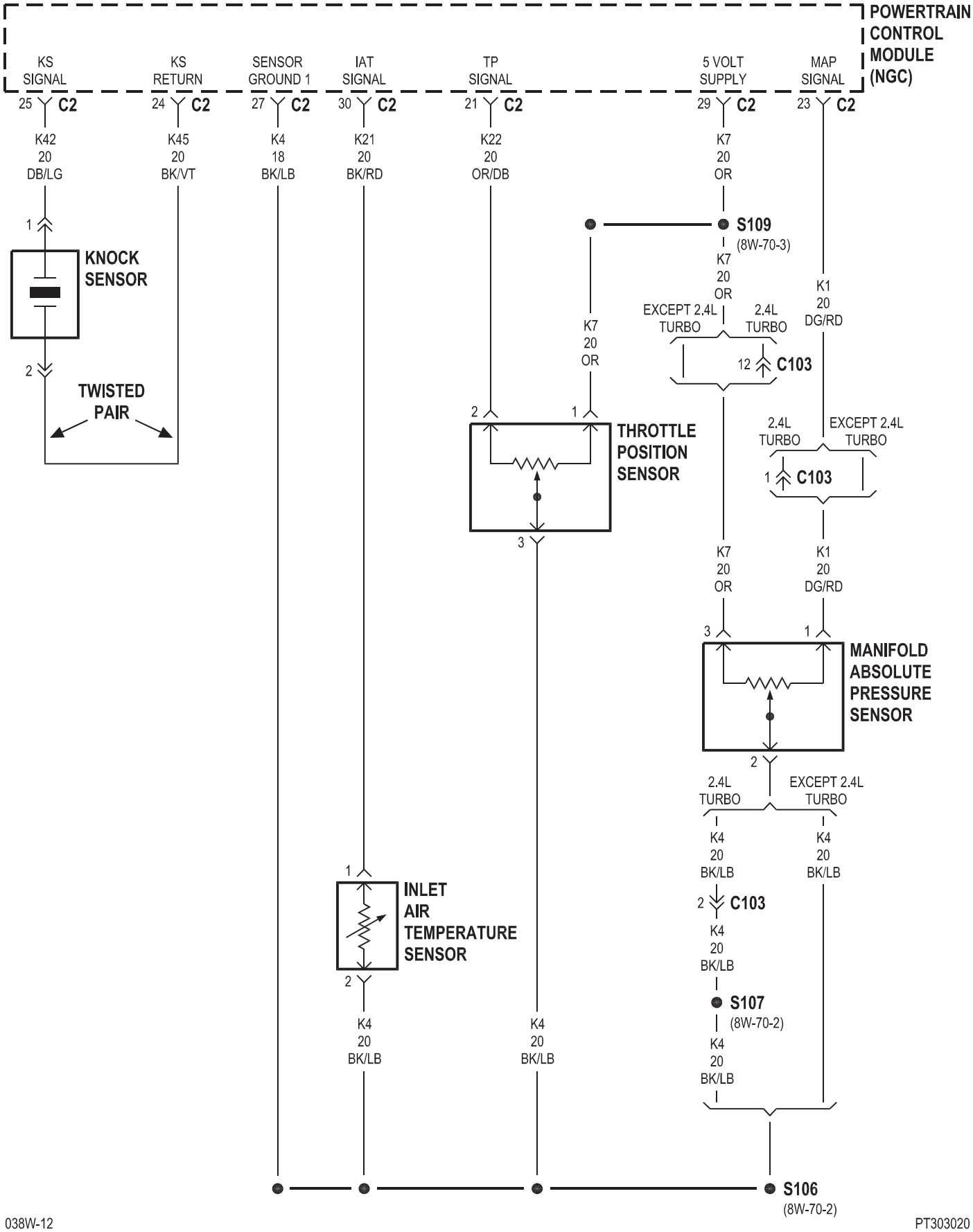
POWERTRAIN CONTROL MODULE (NGC)
KS SIGNAL
KS RETURN
SENSOR GROUND 1
IAT SIGNAL
TP SIGNAL
5 VOLT SUPPLY
MAP SIGNAL
25 C2
24 C2
27 C2
30 C2
21 C2
29 C2
23 C2
K42 20 DB/LG
K45 20 BK/VT
K4 18 BK/LB
K21 20 BK/RD
K22 20 OR/DB
K7 20 OR
K1 20 DG/RD
KNOCK SENSOR
TWISTED PAIR
S109 (8W-70-3)
EXCEPT 2.4L TURBO
2.4L TURBO
C103
THROTTLE POSITION SENSOR
MANIFOLD ABSOLUTE PRESSURE SENSOR
INLET AIR TEMPERATURE SENSOR
K4 20 BK/LB
S107 (8W-70-2)
S106 (8W-70-2)

2.0L/2.4L

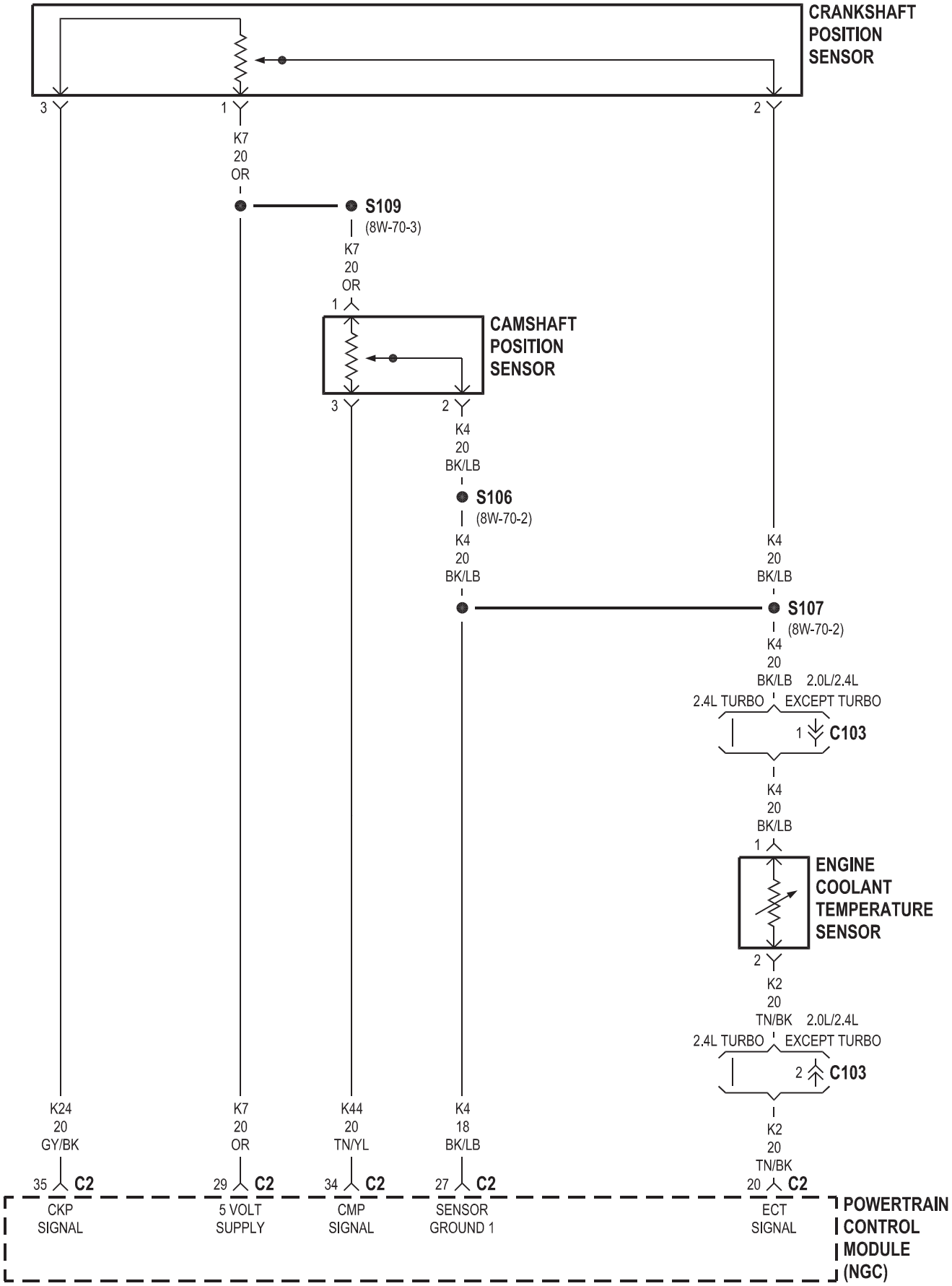
CRANKSHAFT POSITION SENSOR
3
1
2
K7 20 OR
S109
(8W-70-3)
K7 20 OR
1
CAMSHAFT POSITION SENSOR
3
2
K4 20 BK/LB
S106
(8W-70-2)
K4 20 BK/LB
K4 20 BK/LB
S107
(8W-70-2)
K4 20 BK/LB
2.4L TURBO
2.0L/2.4L EXCEPT TURBO
1
C103
K4 20 BK/LB
1
ENGINE COOLANT TEMPERATURE SENSOR
2
K2 20 TN/BK
2.4L TURBO
2.0L/2.4L EXCEPT TURBO
2
C103
K2 20 TN/BK
K24 20 GY/BK
K7 20 OR
K44 20 TN/YL
K4 18 BK/LB
35 C2
29 C2
34 C2
27 C2
20 C2
CKP SIGNAL
5 VOLT SUPPLY
CMP SIGNAL
SENSOR GROUND 1
ECT SIGNAL
POWERTRAIN CONTROL MODULE (NGC)

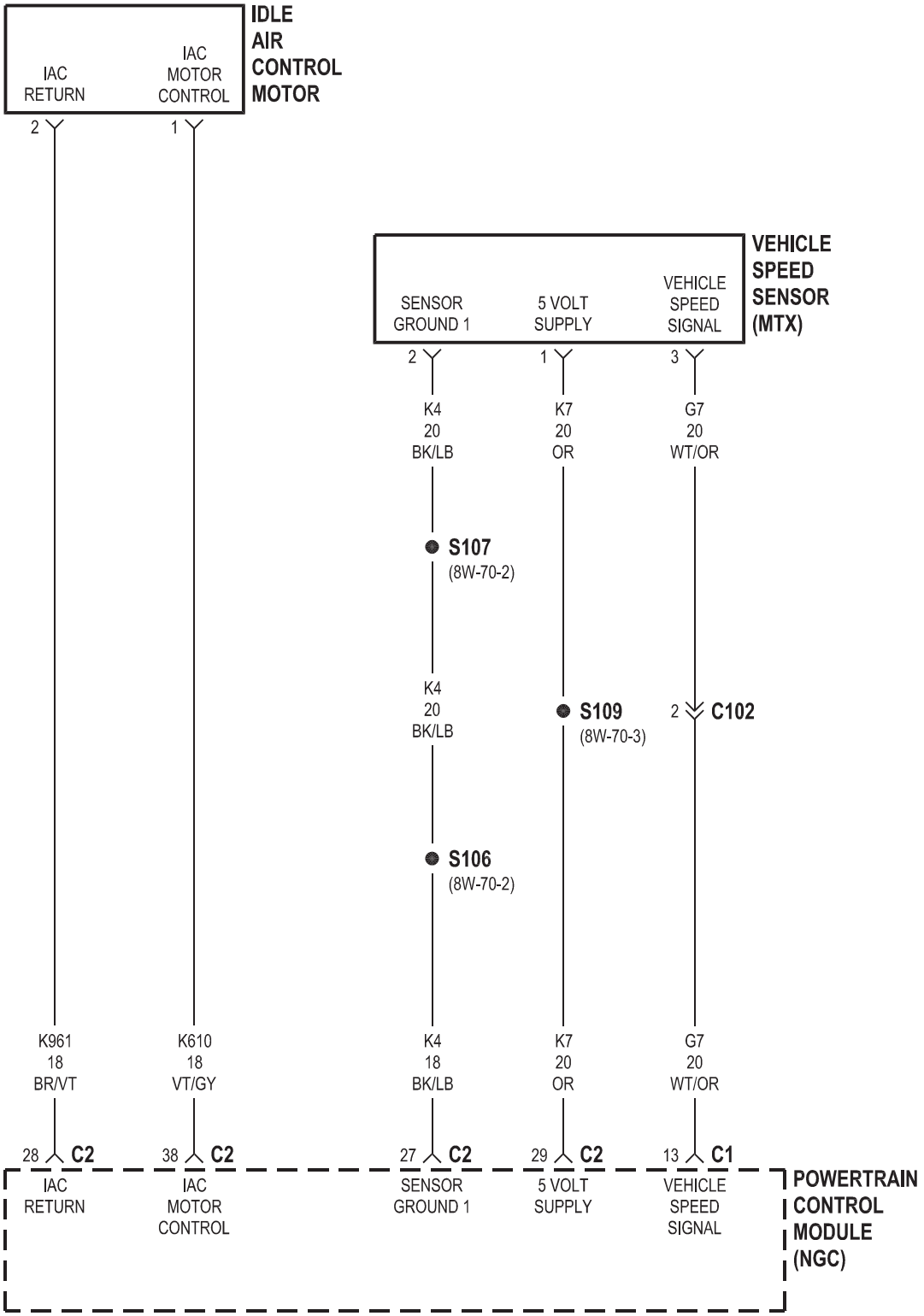
IDLE AIR CONTROL MOTOR
IAC RETURN
IAC MOTOR CONTROL
2
1
VEHICLE SPEED SENSOR (MTX)
SENSOR GROUND 1
5 VOLT SUPPLY
VEHICLE SPEED SIGNAL
2
1
3
K4 20 BK/LB
K7 20 OR
G7 20 WT/OR
S107 (8W-70-2)
K4 20 BK/LB
S109 (8W-70-3)
2 C102
S106 (8W-70-2)
K961 18 BR/VT
K610 18 VT/GY
K4 18 BK/LB
K7 20 OR
G7 20 WT/OR
28 C2
38 C2
27 C2
29 C2
13 C1
IAC RETURN
IAC MOTOR CONTROL
SENSOR GROUND 1
5 VOLT SUPPLY
VEHICLE SPEED SIGNAL
POWERTRAIN CONTROL MODULE (NGC)

2.0L/2.4L EXCEPT TURBO

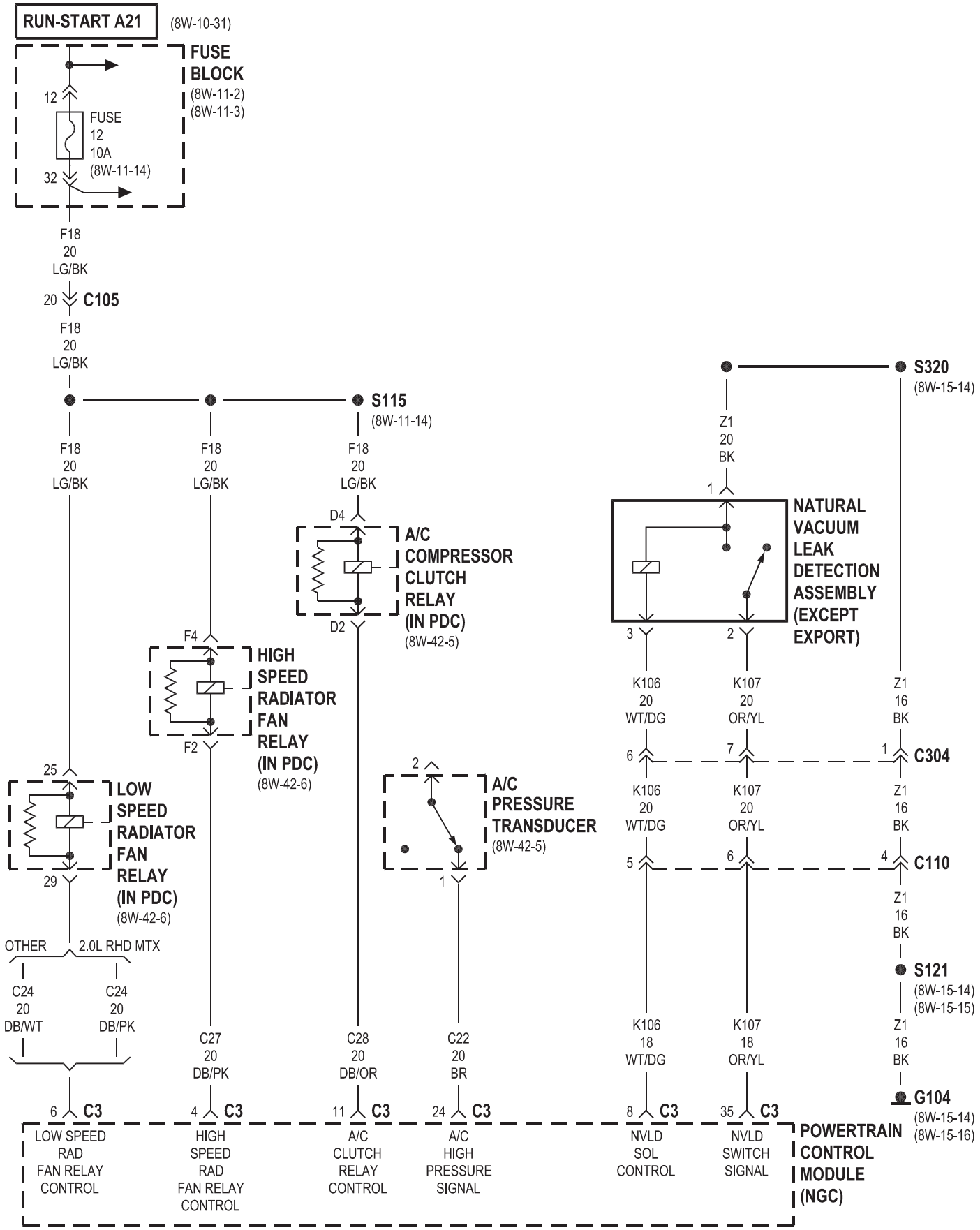

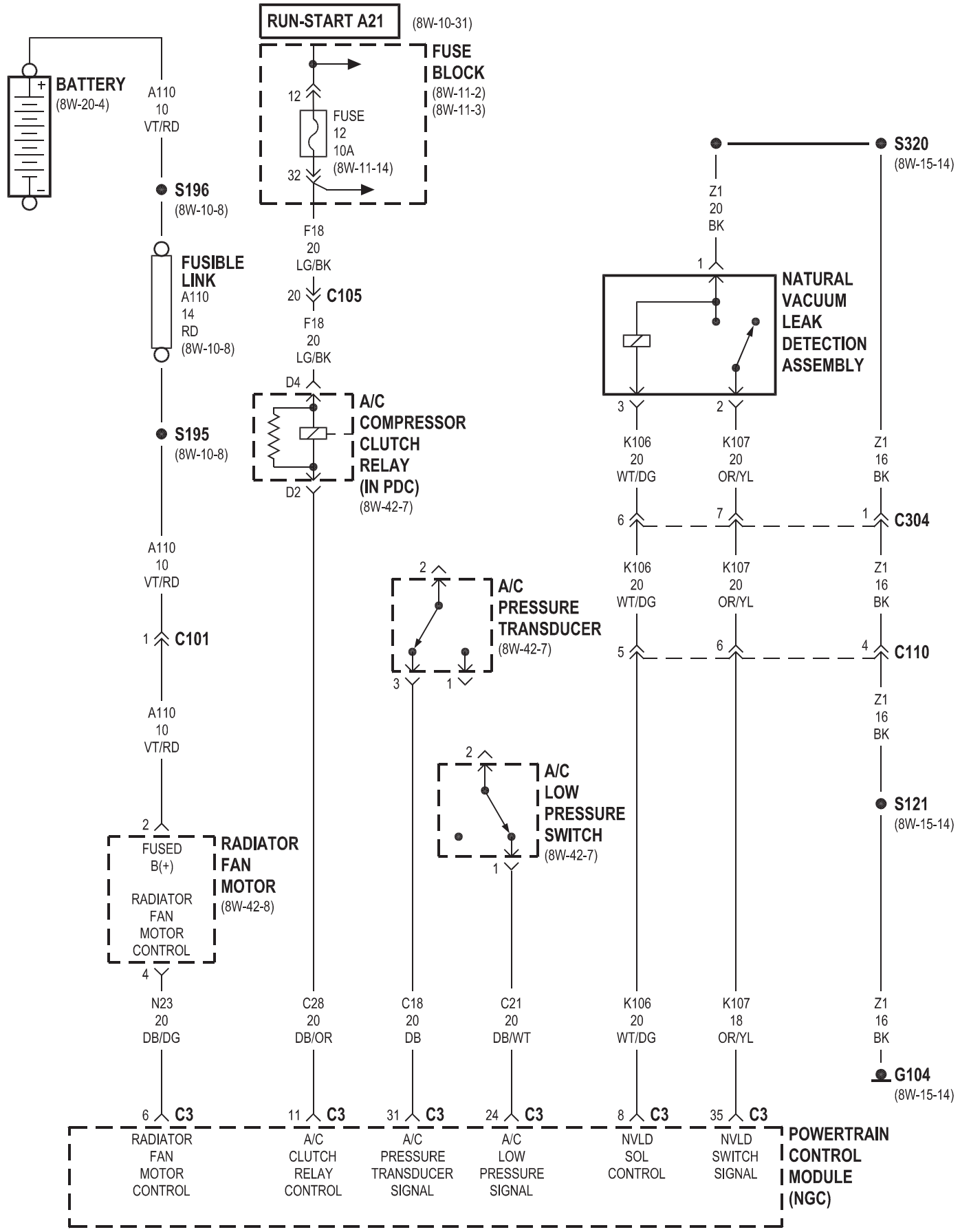
RUN-START A21
(8W-10-31)
BATTERY
(8W-20-4)
A110
10
VT/RD
FUSE
BLOCK
(8W-11-2)
(8W-11-3)
12
FUSE
12
10A
(8W-11-14)
32
S196
(8W-10-8)
F18
20
LG/BK
FUSIBLE
LINK
A110
14
RD
(8W-10-8)
20
C105
F18
20
LG/BK
D4
A/C
COMPRESSOR
CLUTCH
RELAY
(IN PDC)
(8W-42-7)
D2
S195
(8W-10-8)
A110
10
VT/RD
1
C101
A110
10
VT/RD
2
A/C
PRESSURE
TRANSDUCER
(8W-42-7)
3
1
2
A/C
LOW
PRESSURE
SWITCH
(8W-42-7)
1
2
FUSED
B(+)
RADIATOR
FAN
MOTOR
CONTROL
RADIATOR
FAN
MOTOR
(8W-42-8)
4
S320
(8W-15-14)
Z1
20
BK
1
NATURAL
VACUUM
LEAK
DETECTION
ASSEMBLY
3
2
K106
20
WT/DG
K107
20
OR/YL
Z1
16
BK
6
7
1
C304
K106
20
WT/DG
K107
20
OR/YL
Z1
16
BK
5
6
4
C110
Z1
16
BK
S121
(8W-15-14)
N23
20
DB/DG
C28
20
DB/OR
C18
20
DB
C21
20
DB/WT
K106
20
WT/DG
K107
18
OR/YL
Z1
16
BK
G104
(8W-15-14)
6 C3
11 C3
31 C3
24 C3
8 C3
35 C3
RADIATOR
FAN
MOTOR
CONTROL
A/C
CLUTCH
RELAY
CONTROL
A/C
PRESSURE
TRANSDUCER
SIGNAL
A/C
LOW
PRESSURE
SIGNAL
NVLD
SOL
CONTROL
NVLD
SWITCH
SIGNAL
POWERTRAIN
CONTROL
MODULE
(NGC)

2.0L/2.4L

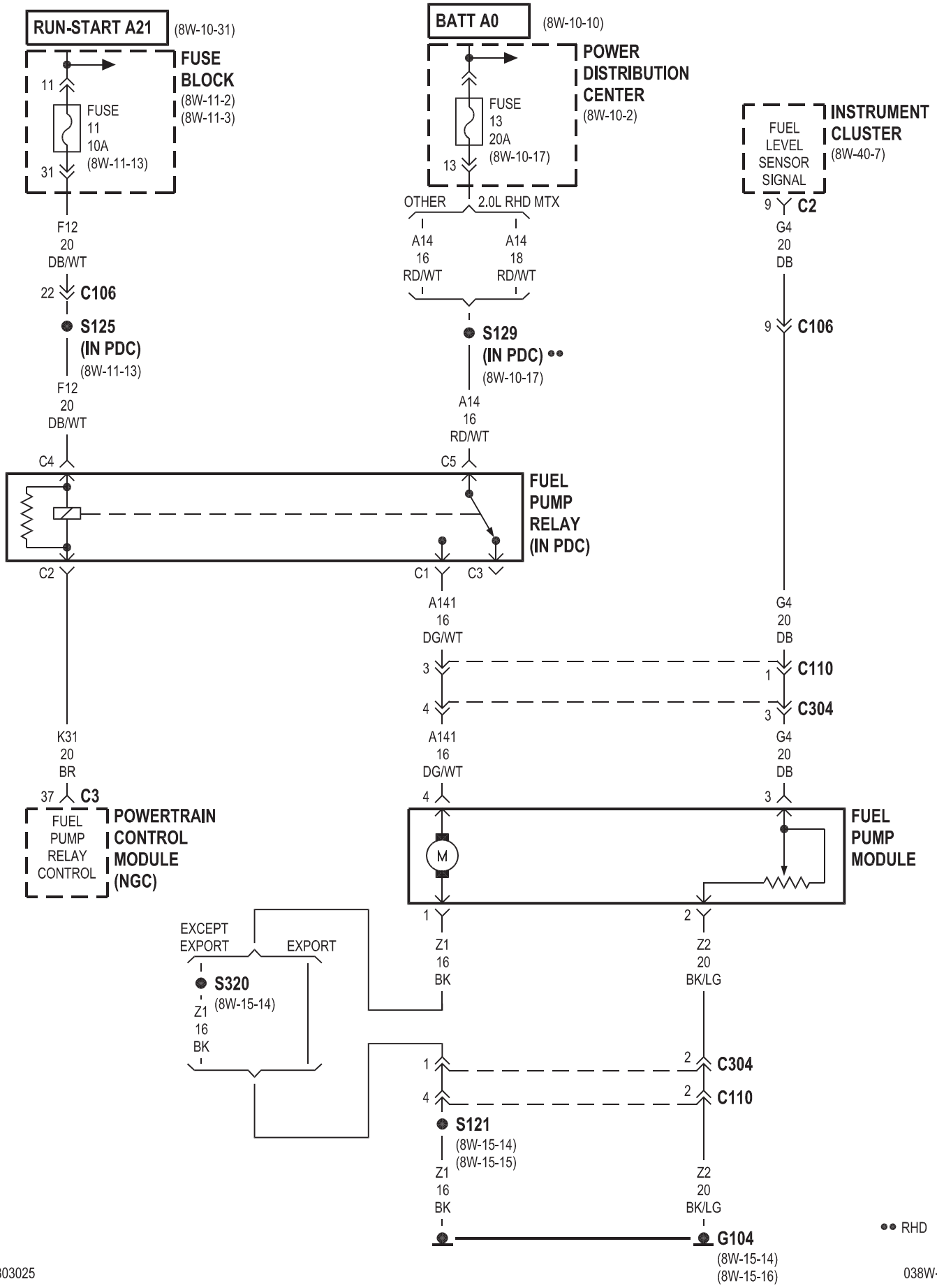
RUN-START A21
(8W-10-31)
FUSE BLOCK
(8W-11-2)
(8W-11-3)
11
FUSE 11 10A
(8W-11-13)
31
F12 20 DB/WT
22
C106
S125 (IN PDC)
(8W-11-13)
F12 20 DB/WT
C4
C2
BATT A0
(8W-10-10)
POWER DISTRIBUTION CENTER
(8W-10-2)
FUSE 13 20A
(8W-10-17)
13
OTHER
2.0L RHD MTX
A14 16 RD/WT
A14 18 RD/WT
S129 (IN PDC) ••
(8W-10-17)
A14 16 RD/WT
C5
C1
C3
FUEL PUMP RELAY (IN PDC)
A141 16 DG/WT
3
4
A141 16 DG/WT
K31 20 BR
37
C3
FUEL PUMP RELAY CONTROL
POWERTRAIN CONTROL MODULE (NGC)
INSTRUMENT CLUSTER
(8W-40-7)
FUEL LEVEL SENSOR SIGNAL
9
C2
G4 20 DB
9
C106
G4 20 DB
1
C110
3
C304
G4 20 DB
4
3
M
FUEL PUMP MODULE
1
2
Z1 16 BK
Z2 20 BK/LG
EXCEPT EXPORT
EXPORT
S320
(8W-15-14)
Z1 16 BK
1
2
C304
4
2
C110
S121
(8W-15-14)
(8W-15-15)
Z1 16 BK
Z2 20 BK/LG
G104
(8W-15-14)
(8W-15-16)
•• RHD

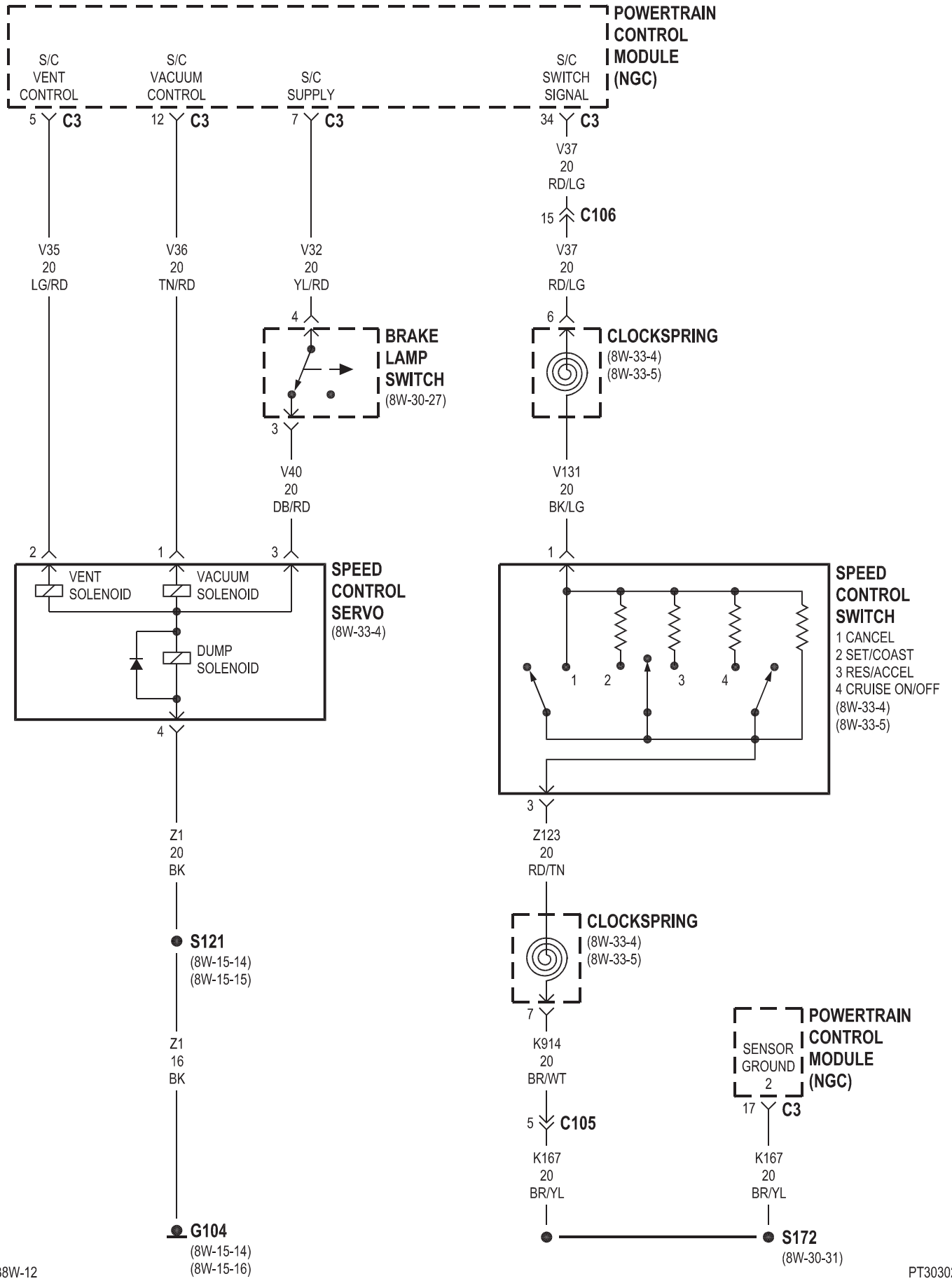
POWERTRAIN CONTROL MODULE (NGC)
S/C VENT CONTROL
S/C VACUUM CONTROL
S/C SUPPLY
S/C SWITCH SIGNAL
5 C3
12 C3
7 C3
34 C3
V37 20 RD/LG
15 C106
V35 20 LG/RD
V36 20 TN/RD
V32 20 YL/RD
V37 20 RD/LG
4
6
BRAKE LAMP SWITCH (8W-30-27)
CLOCKSPRING (8W-33-4) (8W-33-5)
3
V40 20 DB/RD
V131 20 BK/LG
2
1
3
1
VENT SOLENOID
VACUUM SOLENOID
DUMP SOLENOID
SPEED CONTROL SERVO (8W-33-4)
SPEED CONTROL SWITCH
1 CANCEL
2 SET/COAST
3 RES/ACCEL
4 CRUISE ON/OFF
(8W-33-4)
(8W-33-5)
1 2 3 4
4
3
Z1 20 BK
Z123 20 RD/TN
S121 (8W-15-14) (8W-15-15)
CLOCKSPRING (8W-33-4) (8W-33-5)
7
Z1 16 BK
K914 20 BR/WT
POWERTRAIN CONTROL MODULE (NGC)
SENSOR GROUND 2
17 C3
5 C105
K167 20 BR/YL
K167 20 BR/YL
G104 (8W-15-14) (8W-15-16)
S172 (8W-30-31)

2.0L/2.4L

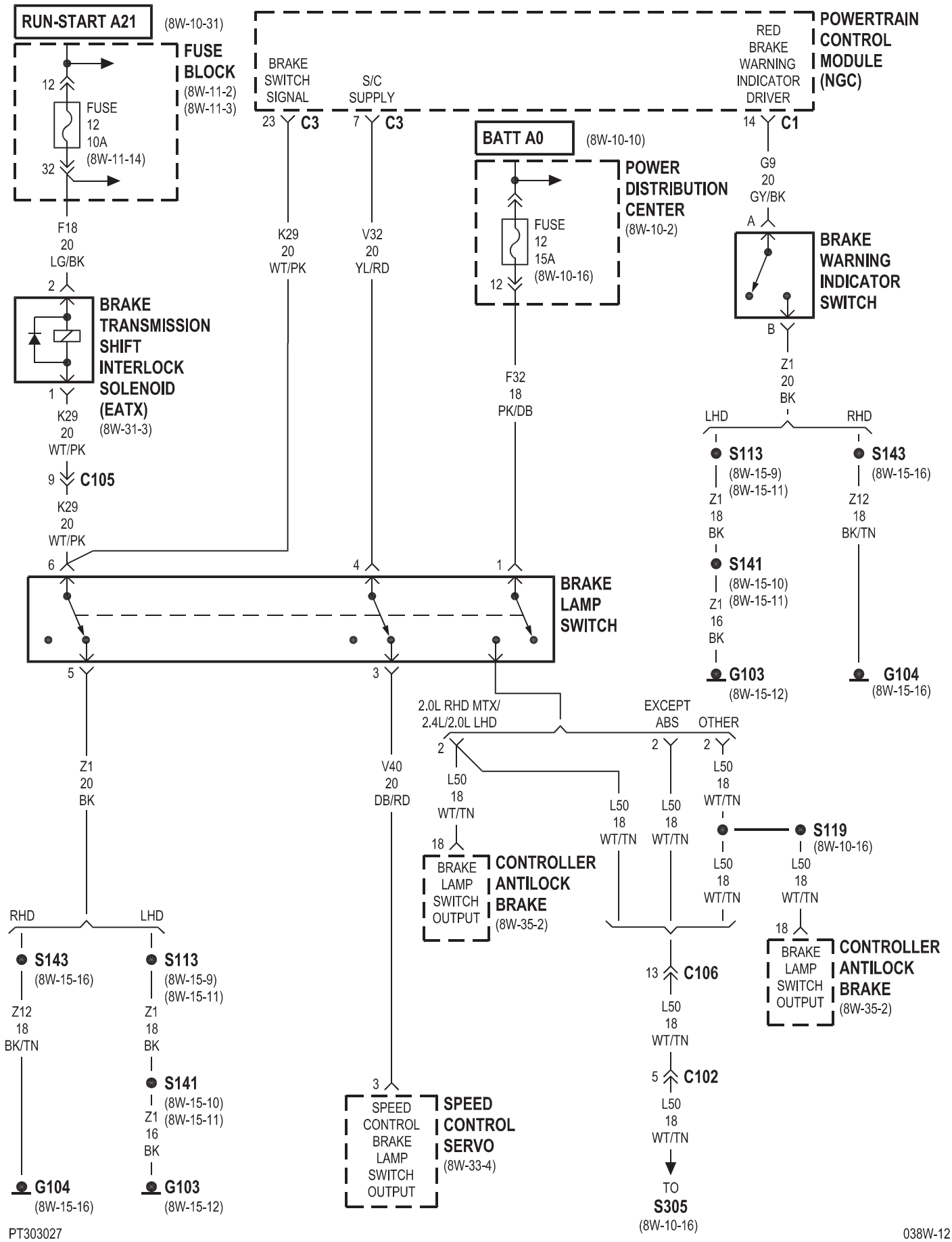
RUN-START A21
(8W-10-31)
FUSE BLOCK
(8W-11-2)
(8W-11-3)
12
FUSE 12 10A
(8W-11-14)
32
F18 20 LG/BK
2
BRAKE TRANSMISSION SHIFT INTERLOCK SOLENOID (EATX)
(8W-31-3)
1
K29 20 WT/PK
9
C105
K29 20 WT/PK
6
POWERTRAIN CONTROL MODULE (NGC)
BRAKE SWITCH SIGNAL
23
C3
S/C SUPPLY
7
C3
RED BRAKE WARNING INDICATOR DRIVER
14
C1
K29 20 WT/PK
V32 20 YL/RD
BATT A0
(8W-10-10)
POWER DISTRIBUTION CENTER
(8W-10-2)
FUSE 12 15A
(8W-10-16)
12
F32 18 PK/DB
G9 20 GY/BK
A
BRAKE WARNING INDICATOR SWITCH
B
Z1 20 BK
LHD
RHD
S113
(8W-15-9)
(8W-15-11)
S143
(8W-15-16)
Z1 18 BK
Z12 18 BK/TN
S141
(8W-15-10)
(8W-15-11)
Z1 16 BK
G103
(8W-15-12)
G104
(8W-15-16)
BRAKE LAMP SWITCH
6
4
1
5
3
Z1 20 BK
V40 20 DB/RD
2.0L RHD MTX/ 2.4L/2.0L LHD
EXCEPT ABS
OTHER
2
2
2
L50 18 WT/TN
L50 18 WT/TN
L50 18 WT/TN
L50 18 WT/TN
S119
(8W-10-16)
L50 18 WT/TN
L50 18 WT/TN
18
BRAKE LAMP SWITCH OUTPUT
CONTROLLER ANTILOCK BRAKE
(8W-35-2)
18
BRAKE LAMP SWITCH OUTPUT
CONTROLLER ANTILOCK BRAKE
(8W-35-2)
RHD
LHD
S143
(8W-15-16)
S113
(8W-15-9)
(8W-15-11)
Z12 18 BK/TN
Z1 18 BK
S141
(8W-15-10)
(8W-15-11)
Z1 16 BK
G104
(8W-15-16)
G103
(8W-15-12)
3
SPEED CONTROL BRAKE LAMP SWITCH OUTPUT
SPEED CONTROL SERVO
(8W-33-4)
13
C106
L50 18 WT/TN
5
C102
L50 18 WT/TN
TO
S305
(8W-10-16)

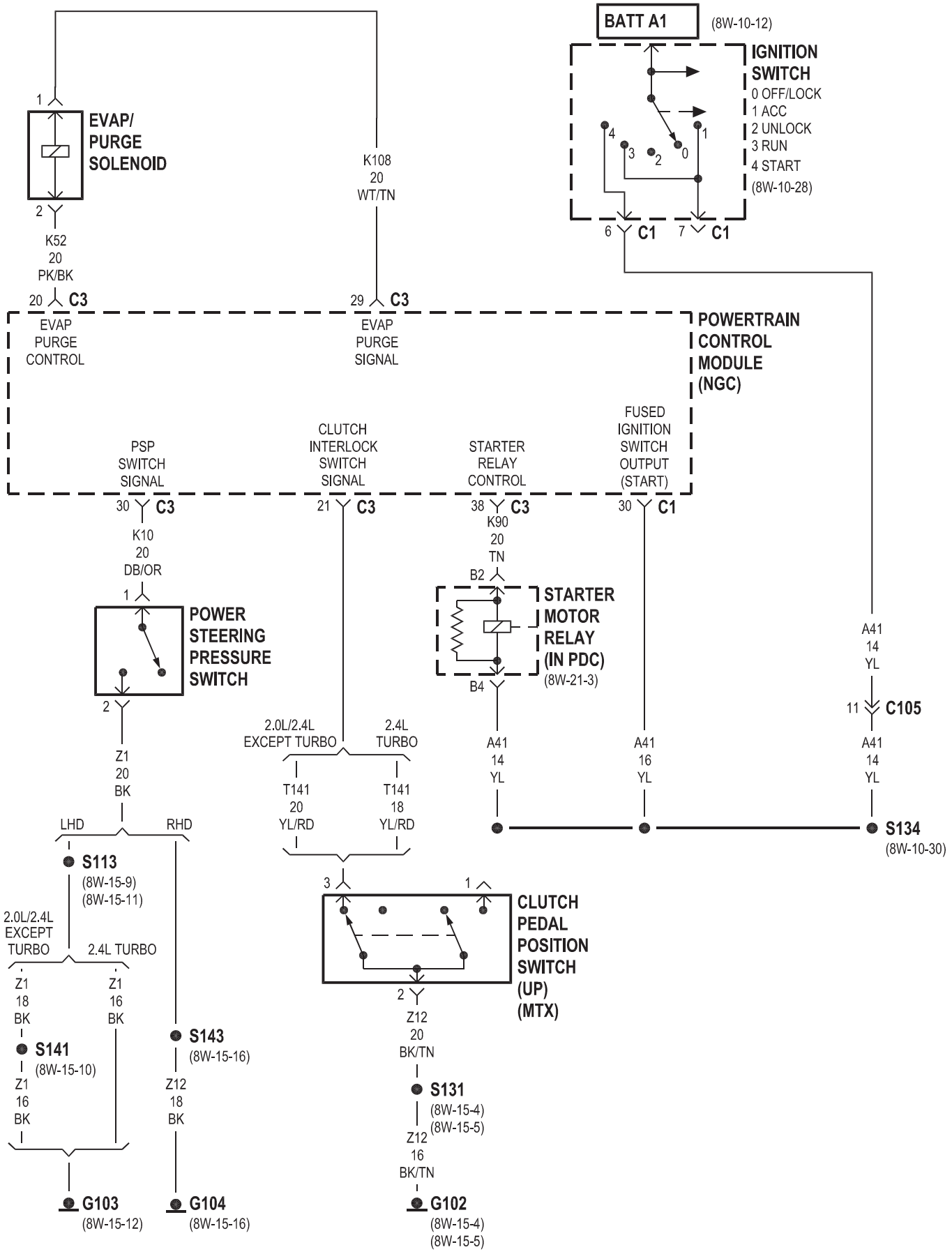
BATT A1
(8W-10-12)
IGNITION SWITCH
0 OFF/LOCK
1 ACC
2 UNLOCK
3 RUN
4 START
(8W-10-28)
6 C1
7 C1
EVAP/ PURGE SOLENOID
K52
20
PK/BK
20 C3
K108
20
WT/TN
29 C3
EVAP PURGE CONTROL
EVAP PURGE SIGNAL
POWERTRAIN CONTROL MODULE (NGC)
PSP SWITCH SIGNAL
CLUTCH INTERLOCK SWITCH SIGNAL
STARTER RELAY CONTROL
FUSED IGNITION SWITCH OUTPUT (START)
30 C3
21 C3
38 C3
30 C1
K10
20
DB/OR
K90
20
TN
B2
B4
STARTER MOTOR RELAY (IN PDC)
(8W-21-3)
POWER STEERING PRESSURE SWITCH
A41
14
YL
11 C105
2.0L/2.4L EXCEPT TURBO
2.4L TURBO
T141
20
YL/RD
T141
18
YL/RD
A41
14
YL
A41
16
YL
A41
14
YL
S134
(8W-10-30)
Z1
20
BK
LHD
RHD
S113
(8W-15-9)
(8W-15-11)
CLUTCH PEDAL POSITION SWITCH (UP) (MTX)
2.0L/2.4L EXCEPT TURBO
2.4L TURBO
Z1
18
BK
Z1
16
BK
S141
(8W-15-10)
Z1
16
BK
S143
(8W-15-16)
Z12
18
BK
Z12
20
BK/TN
S131
(8W-15-4)
(8W-15-5)
Z12
16
BK/TN
G103
(8W-15-12)
G104
(8W-15-16)
G102
(8W-15-4)
(8W-15-5)

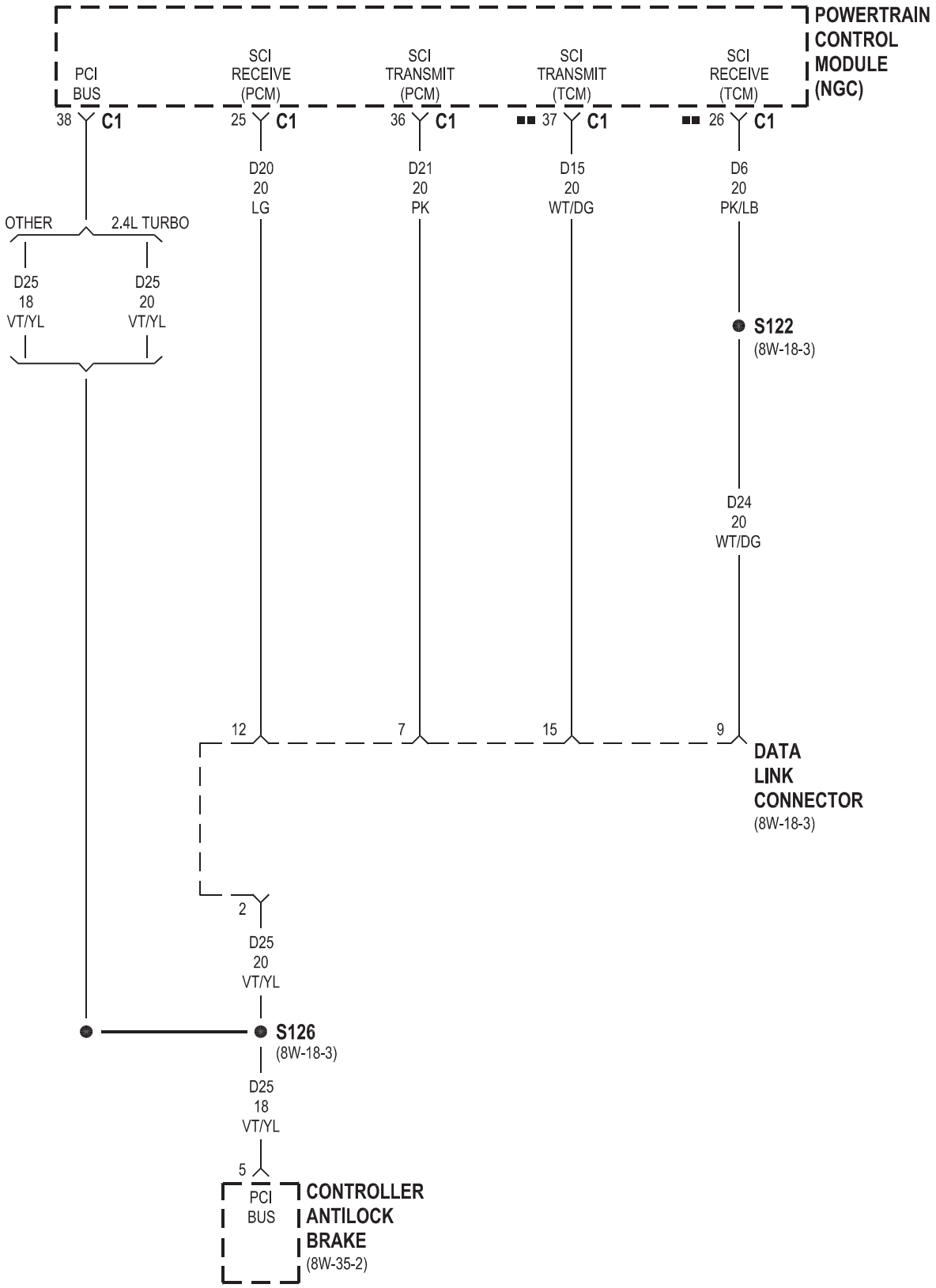
POWERTRAIN CONTROL MODULE (NGC)
PCI BUS
SCI RECEIVE (PCM)
SCI TRANSMIT (PCM)
SCI TRANSMIT (TCM)
SCI RECEIVE (TCM)
38 C1
25 C1
36 C1
■■ 37 C1
■■ 26 C1
D20 20 LG
D21 20 PK
D15 20 WT/DG
D6 20 PK/LB
OTHER
2.4L TURBO
D25 18 VT/YL
D25 20 VT/YL
S122
(8W-18-3)
D24 20 WT/DG
12
7
15
9
DATA LINK CONNECTOR
(8W-18-3)
2
D25 20 VT/YL
S126
(8W-18-3)
D25 18 VT/YL
5
PCI BUS
CONTROLLER ANTILOCK BRAKE
(8W-35-2)

■■ EATX

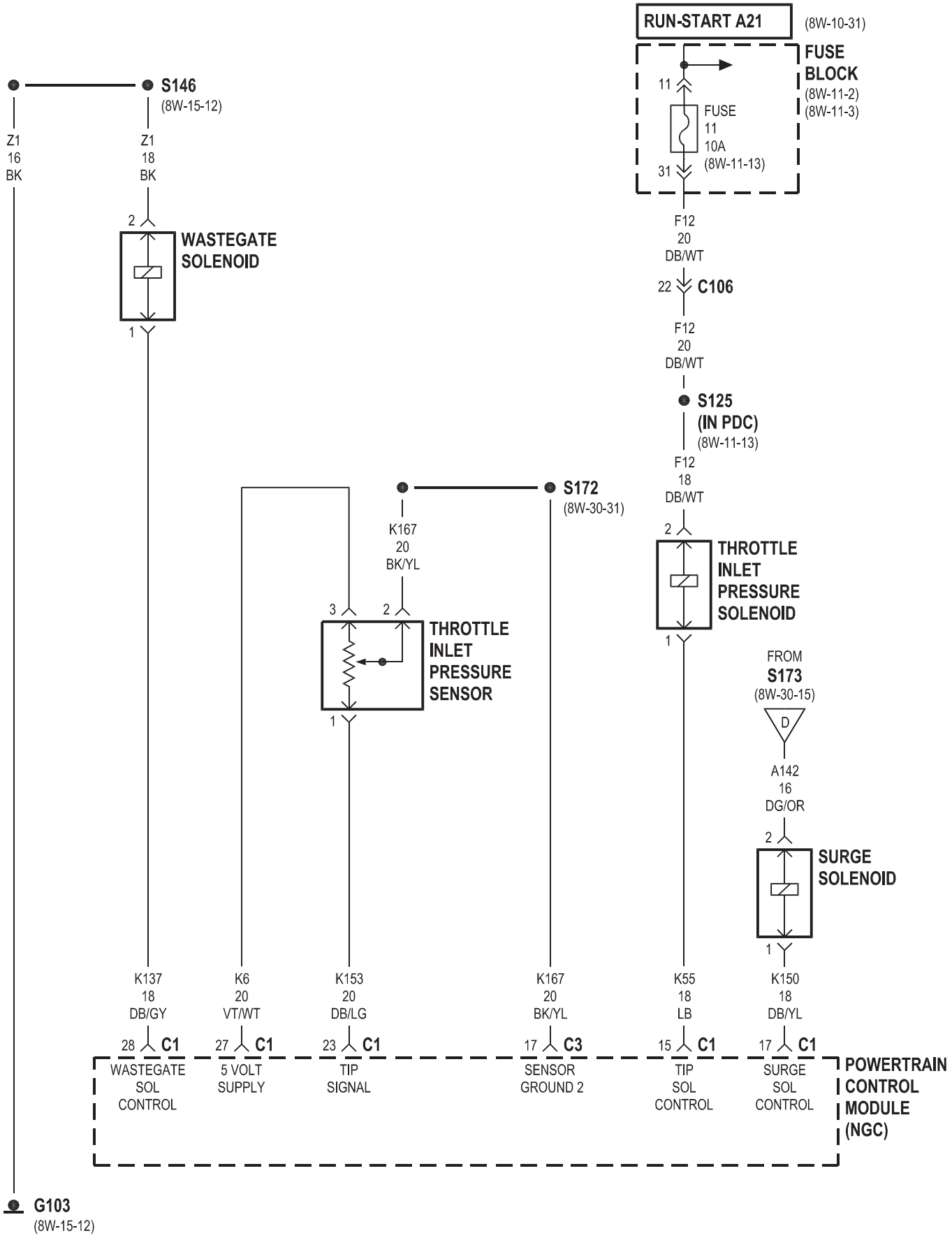
RUN-START A21
(8W-10-31)
FUSE BLOCK
(8W-11-2)
(8W-11-3)
11
FUSE 11 10A
(8W-11-13)
31
F12 20 DB/WT
22
C106
F12 20 DB/WT
S125 (IN PDC)
(8W-11-13)
F12 18 DB/WT
S146
(8W-15-12)
Z1 16 BK
Z1 18 BK
2
WASTEGATE SOLENOID
1
S172
(8W-30-31)
K167 20 BK/YL
3
2
THROTTLE INLET PRESSURE SENSOR
1
2
THROTTLE INLET PRESSURE SOLENOID
1
FROM S173
(8W-30-15)
D
A142 16 DG/OR
2
SURGE SOLENOID
1
K137 18 DB/GY
K6 20 VT/WT
K153 20 DB/LG
K167 20 BK/YL
K55 18 LB
K150 18 DB/YL
28 C1
27 C1
23 C1
17 C3
15 C1
17 C1
WASTEGATE SOL CONTROL
5 VOLT SUPPLY
TIP SIGNAL
SENSOR GROUND 2
TIP SOL CONTROL
SURGE SOL CONTROL
POWERTRAIN CONTROL MODULE (NGC)
G103
(8W-15-12)

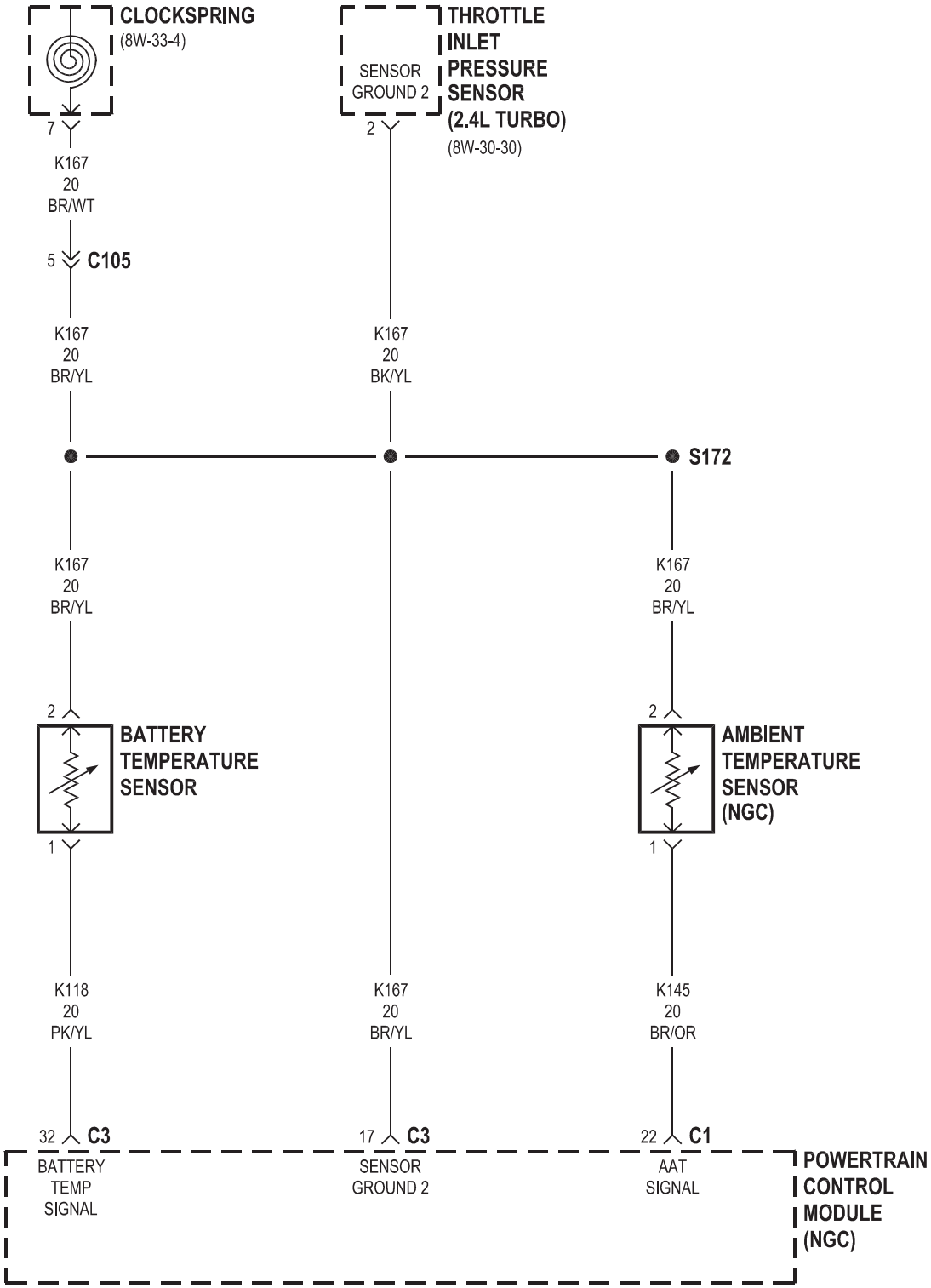
CLOCKSPRING
(8W-33-4)
7
K167
20
BR/WT
5
C105
K167
20
BR/YL
THROTTLE
INLET
PRESSURE
SENSOR
(2.4L TURBO)
(8W-30-30)
SENSOR
GROUND 2
2
K167
20
BK/YL
S172
K167
20
BR/YL
K167
20
BR/YL
2
BATTERY
TEMPERATURE
SENSOR
1
2
AMBIENT
TEMPERATURE
SENSOR
(NGC)
1
K118
20
PK/YL
K167
20
BR/YL
K145
20
BR/OR
32
C3
BATTERY
TEMP
SIGNAL
17
C3
SENSOR
GROUND 2
22
C1
AAT
SIGNAL
POWERTRAIN
CONTROL
MODULE
(NGC)

2.0L/2.4L

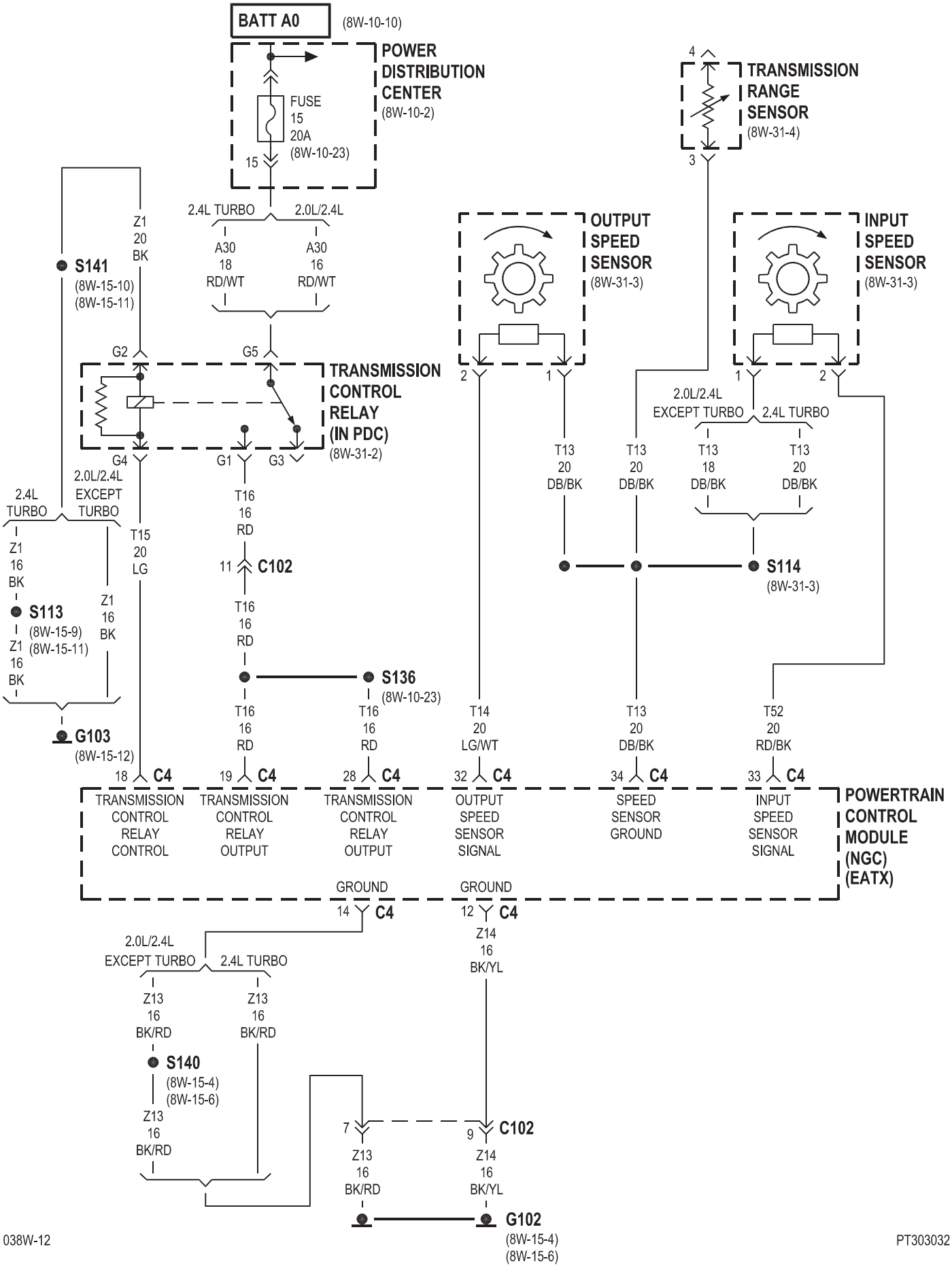
BATT A0
(8W-10-10)
POWER DISTRIBUTION CENTER
(8W-10-2)
FUSE 15 20A
(8W-10-23)
15
TRANSMISSION RANGE SENSOR
(8W-31-4)
4
3
2.4L TURBO
2.0L/2.4L
A30 18 RD/WT
A30 16 RD/WT
Z1 20 BK
S141
(8W-15-10)
(8W-15-11)
G2
G5
TRANSMISSION CONTROL RELAY (IN PDC)
(8W-31-2)
G4
G1
G3
OUTPUT SPEED SENSOR
(8W-31-3)
INPUT SPEED SENSOR
(8W-31-3)
2
1
1
2
2.0L/2.4L EXCEPT TURBO
2.4L TURBO
T13 20 DB/BK
T13 20 DB/BK
T13 18 DB/BK
T13 20 DB/BK
S114
(8W-31-3)
2.4L TURBO
2.0L/2.4L EXCEPT TURBO
Z1 16 BK
S113
(8W-15-9)
(8W-15-11)
Z1 16 BK
Z1 16 BK
G103
(8W-15-12)
T15 20 LG
T16 16 RD
11
C102
T16 16 RD
S136
(8W-10-23)
T16 16 RD
T16 16 RD
T14 20 LG/WT
T13 20 DB/BK
T52 20 RD/BK
18 C4
19 C4
28 C4
32 C4
34 C4
33 C4
TRANSMISSION CONTROL RELAY CONTROL
TRANSMISSION CONTROL RELAY OUTPUT
TRANSMISSION CONTROL RELAY OUTPUT
OUTPUT SPEED SENSOR SIGNAL
SPEED SENSOR GROUND
INPUT SPEED SENSOR SIGNAL
POWERTRAIN CONTROL MODULE (NGC) (EATX)
GROUND
GROUND
14 C4
12 C4
Z14 16 BK/YL
2.0L/2.4L EXCEPT TURBO
2.4L TURBO
Z13 16 BK/RD
Z13 16 BK/RD
S140
(8W-15-4)
(8W-15-6)
Z13 16 BK/RD
7
9
C102
Z13 16 BK/RD
Z14 16 BK/YL
G102
(8W-15-4)
(8W-15-6)

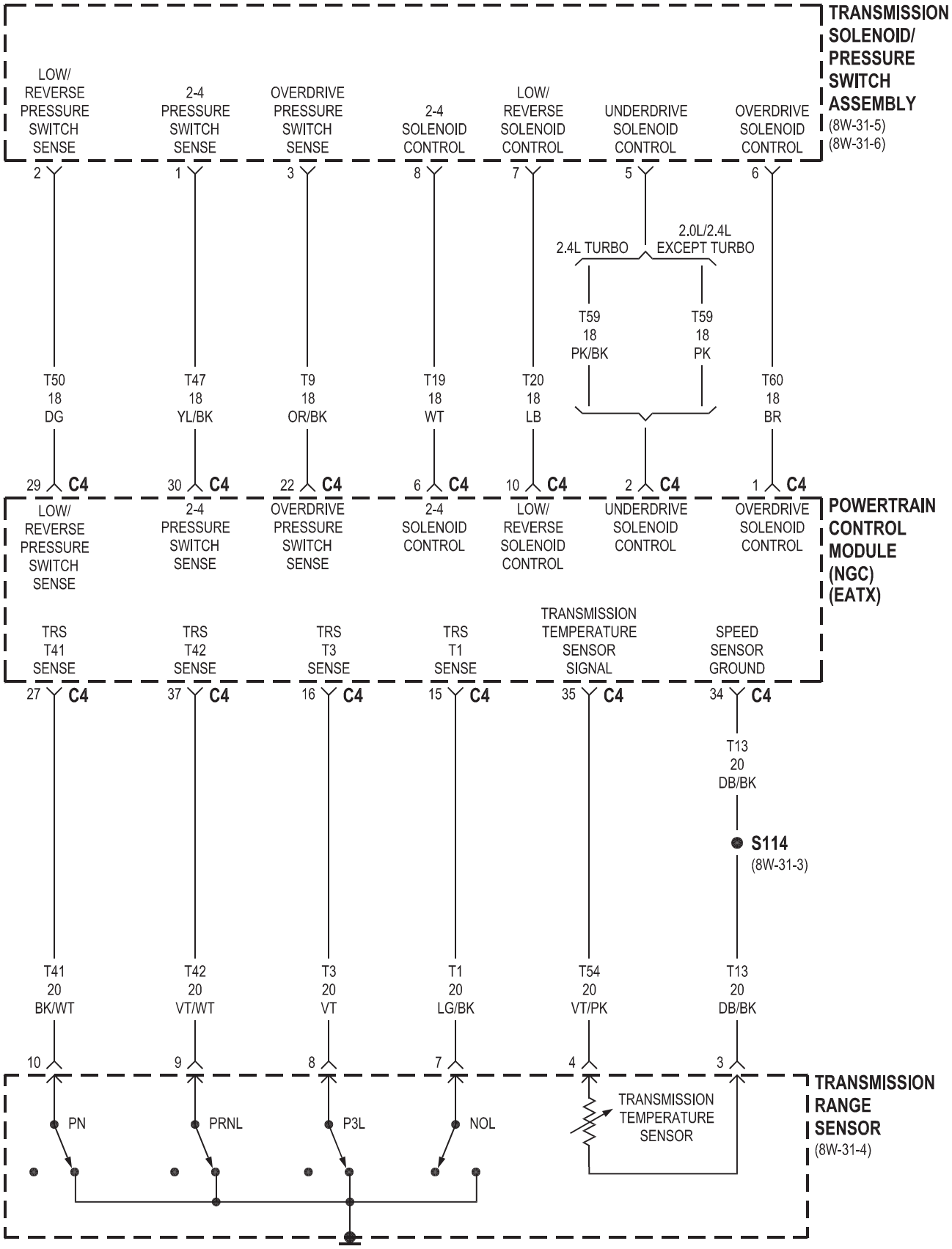
TRANSMISSION SOLENOID/ PRESSURE SWITCH ASSEMBLY
(8W-31-5)
(8W-31-6)
LOW/ REVERSE PRESSURE SWITCH SENSE
2-4 PRESSURE SWITCH SENSE
OVERDRIVE PRESSURE SWITCH SENSE
2-4 SOLENOID CONTROL
LOW/ REVERSE SOLENOID CONTROL
UNDERDRIVE SOLENOID CONTROL
OVERDRIVE SOLENOID CONTROL
2 1 3 8 7 5 6
2.4L TURBO
2.0L/2.4L EXCEPT TURBO
T59 18 PK/BK
T59 18 PK
T50 18 DG
T47 18 YL/BK
T9 18 OR/BK
T19 18 WT
T20 18 LB
T60 18 BR
29 C4 30 C4 22 C4 6 C4 10 C4 2 C4 1 C4
POWERTRAIN CONTROL MODULE (NGC) (EATX)
LOW/ REVERSE PRESSURE SWITCH SENSE
2-4 PRESSURE SWITCH SENSE
OVERDRIVE PRESSURE SWITCH SENSE
2-4 SOLENOID CONTROL
LOW/ REVERSE SOLENOID CONTROL
UNDERDRIVE SOLENOID CONTROL
OVERDRIVE SOLENOID CONTROL
TRS T41 SENSE
TRS T42 SENSE
TRS T3 SENSE
TRS T1 SENSE
TRANSMISSION TEMPERATURE SENSOR SIGNAL
SPEED SENSOR GROUND
27 C4 37 C4 16 C4 15 C4 35 C4 34 C4
T13 20 DB/BK
S114
(8W-31-3)
T41 20 BK/WT
T42 20 VT/WT
T3 20 VT
T1 20 LG/BK
T54 20 VT/PK
T13 20 DB/BK
10 9 8 7 4 3
TRANSMISSION RANGE SENSOR
(8W-31-4)
PN
PRNL
P3L
NOL
TRANSMISSION TEMPERATURE SENSOR

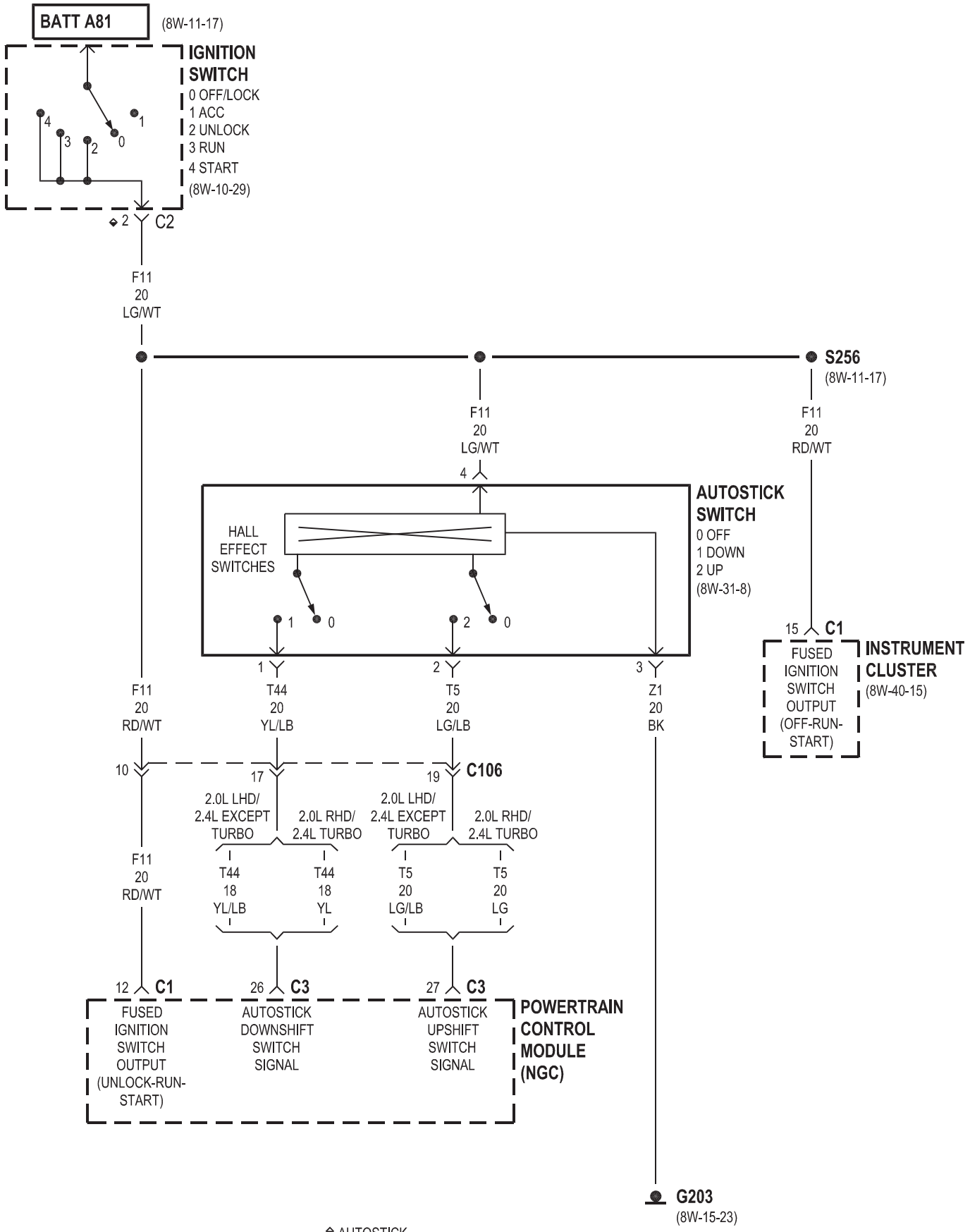
BATT A81
(8W-11-17)
IGNITION SWITCH
0 OFF/LOCK
1 ACC
2 UNLOCK
3 RUN
4 START
(8W-10-29)
4
3
2
0
1
2
C2
F11
20
LG/WT
S256
(8W-11-17)
F11
20
LG/WT
F11
20
RD/WT
4
AUTOSTICK SWITCH
0 OFF
1 DOWN
2 UP
(8W-31-8)
HALL EFFECT SWITCHES
1
0
2
0
15
C1
FUSED IGNITION SWITCH OUTPUT (OFF-RUN-START)
INSTRUMENT CLUSTER
(8W-40-15)
1
2
3
F11
20
RD/WT
T44
20
YL/LB
T5
20
LG/LB
Z1
20
BK
10
17
19
C106
2.0L LHD/ 2.4L EXCEPT TURBO
2.0L RHD/ 2.4L TURBO
2.0L LHD/ 2.4L EXCEPT TURBO
2.0L RHD/ 2.4L TURBO
F11
20
RD/WT
T44
18
YL/LB
T44
18
YL
T5
20
LG/LB
T5
20
LG
12
C1
FUSED IGNITION SWITCH OUTPUT (UNLOCK-RUN-START)
26
C3
AUTOSTICK DOWNSHIFT SWITCH SIGNAL
27
C3
AUTOSTICK UPSHIFT SWITCH SIGNAL
POWERTRAIN CONTROL MODULE (NGC)
G203
(8W-15-23)
◆ AUTOSTICK

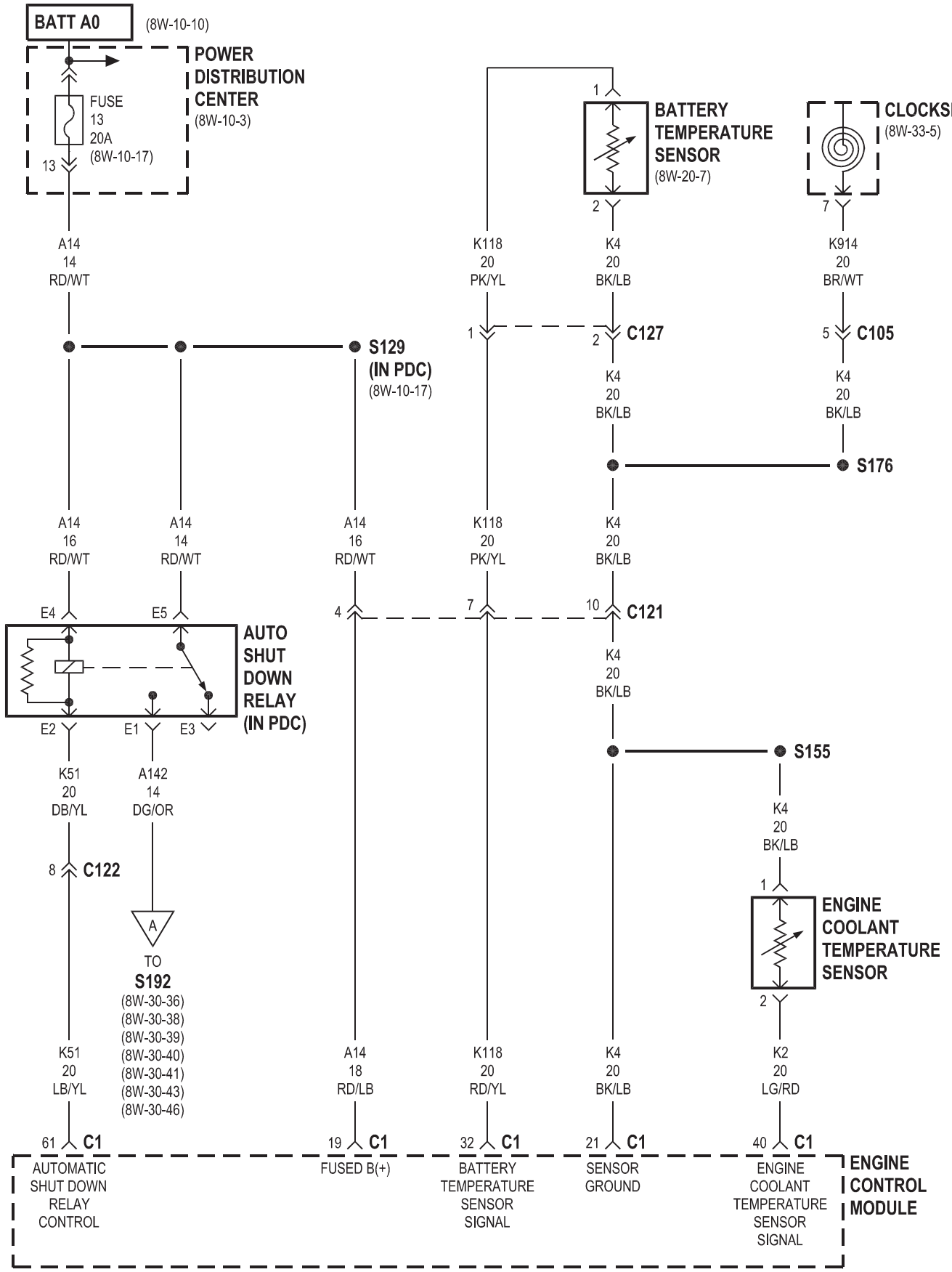
BATT A0
(8W-10-10)
POWER DISTRIBUTION CENTER
(8W-10-3)
FUSE 13 20A
(8W-10-17)
13
A14 14 RD/WT
BATTERY TEMPERATURE SENSOR
(8W-20-7)
1
2
CLOCKSPRING
(8W-33-5)
7
K118 20 PK/YL
K4 20 BK/LB
K914 20 BR/WT
1
2
C127
5
C105
S129 (IN PDC)
(8W-10-17)
K4 20 BK/LB
K4 20 BK/LB
S176
A14 16 RD/WT
A14 14 RD/WT
A14 16 RD/WT
K118 20 PK/YL
K4 20 BK/LB
E4
E5
4
7
10
C121
AUTO SHUT DOWN RELAY (IN PDC)
E2
E1
E3
K4 20 BK/LB
S155
K51 20 DB/YL
A142 14 DG/OR
K4 20 BK/LB
8
C122
1
ENGINE COOLANT TEMPERATURE SENSOR
A
TO
S192
(8W-30-36)
(8W-30-38)
(8W-30-39)
(8W-30-40)
(8W-30-41)
(8W-30-43)
(8W-30-46)
2
K51 20 LB/YL
A14 18 RD/LB
K118 20 RD/YL
K4 20 BK/LB
K2 20 LG/RD
61
C1
19
C1
32
C1
21
C1
40
C1
AUTOMATIC SHUT DOWN RELAY CONTROL
FUSED B(+)
BATTERY TEMPERATURE SENSOR SIGNAL
SENSOR GROUND
ENGINE COOLANT TEMPERATURE SENSOR SIGNAL
ENGINE CONTROL MODULE

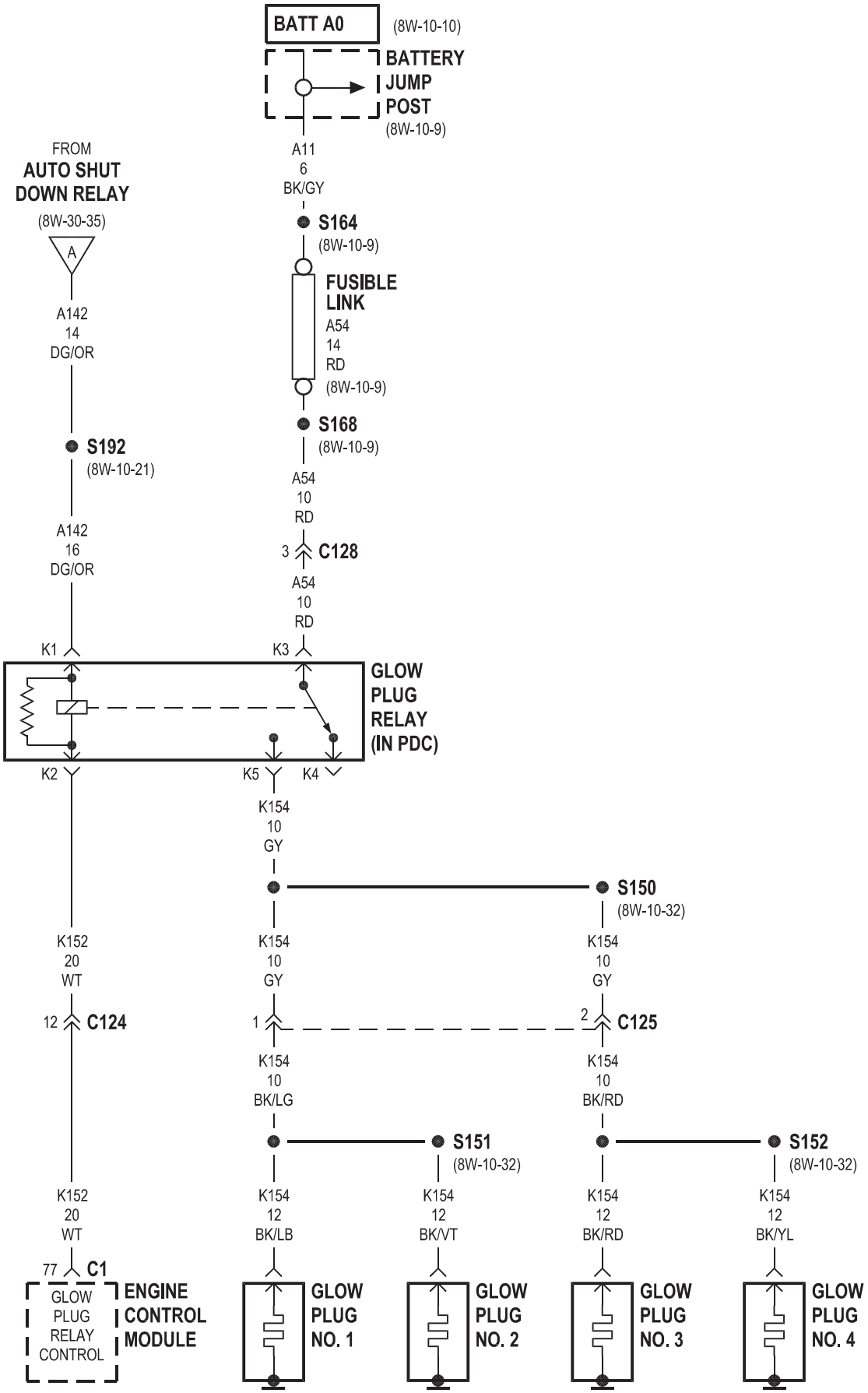
BATT A0
(8W-10-10)
BATTERY JUMP POST
(8W-10-9)
A11
6
BK/GY
S164
(8W-10-9)
FUSIBLE LINK
A54
14
RD
(8W-10-9)
S168
(8W-10-9)
A54
10
RD
3
C128
A54
10
RD
FROM
AUTO SHUT DOWN RELAY
(8W-30-35)
A
A142
14
DG/OR
S192
(8W-10-21)
A142
16
DG/OR
K1
K3
GLOW PLUG RELAY (IN PDC)
K2
K5
K4
K154
10
GY
S150
(8W-10-32)
K152
20
WT
K154
10
GY
K154
10
GY
12
C124
1
2
C125
K154
10
BK/LG
K154
10
BK/RD
S151
(8W-10-32)
S152
(8W-10-32)
K152
20
WT
K154
12
BK/LB
K154
12
BK/VT
K154
12
BK/RD
K154
12
BK/YL
77
C1
GLOW PLUG RELAY CONTROL
ENGINE CONTROL MODULE
GLOW PLUG NO. 1
GLOW PLUG NO. 2
GLOW PLUG NO. 3
GLOW PLUG NO. 4

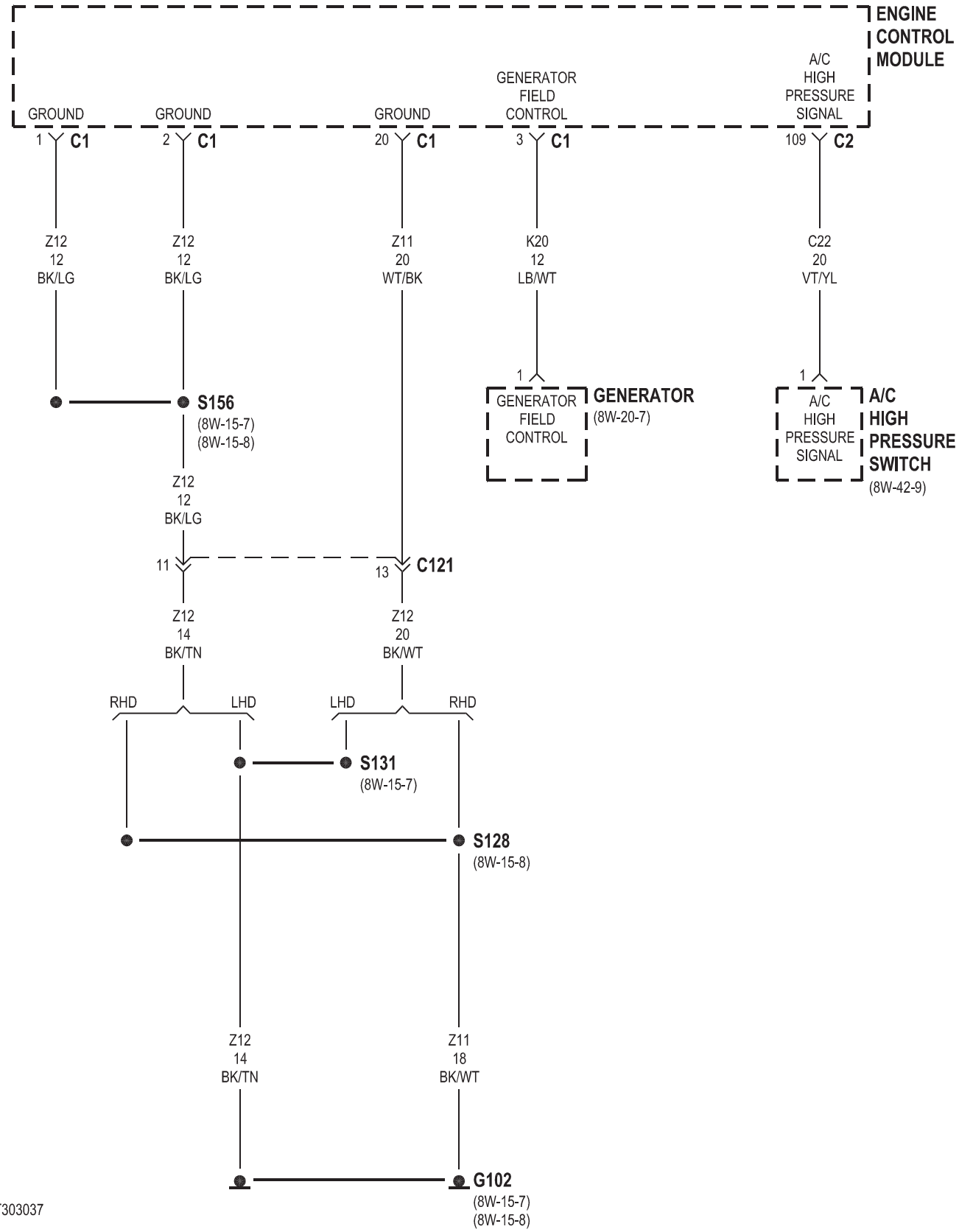
ENGINE CONTROL MODULE
GROUND
1 C1
GROUND
2 C1
GROUND
20 C1
GENERATOR FIELD CONTROL
3 C1
A/C HIGH PRESSURE SIGNAL
109 C2
Z12 12 BK/LG
Z12 12 BK/LG
Z11 20 WT/BK
K20 12 LB/WT
C22 20 VT/YL
1
GENERATOR FIELD CONTROL
GENERATOR
(8W-20-7)
1
A/C HIGH PRESSURE SIGNAL
A/C HIGH PRESSURE SWITCH
(8W-42-9)
S156
(8W-15-7)
(8W-15-8)
Z12 12 BK/LG
11
13 C121
Z12 14 BK/TN
Z12 20 BK/WT
RHD
LHD
LHD
RHD
S131
(8W-15-7)
S128
(8W-15-8)
Z12 14 BK/TN
Z11 18 BK/WT
G102
(8W-15-7)
(8W-15-8)

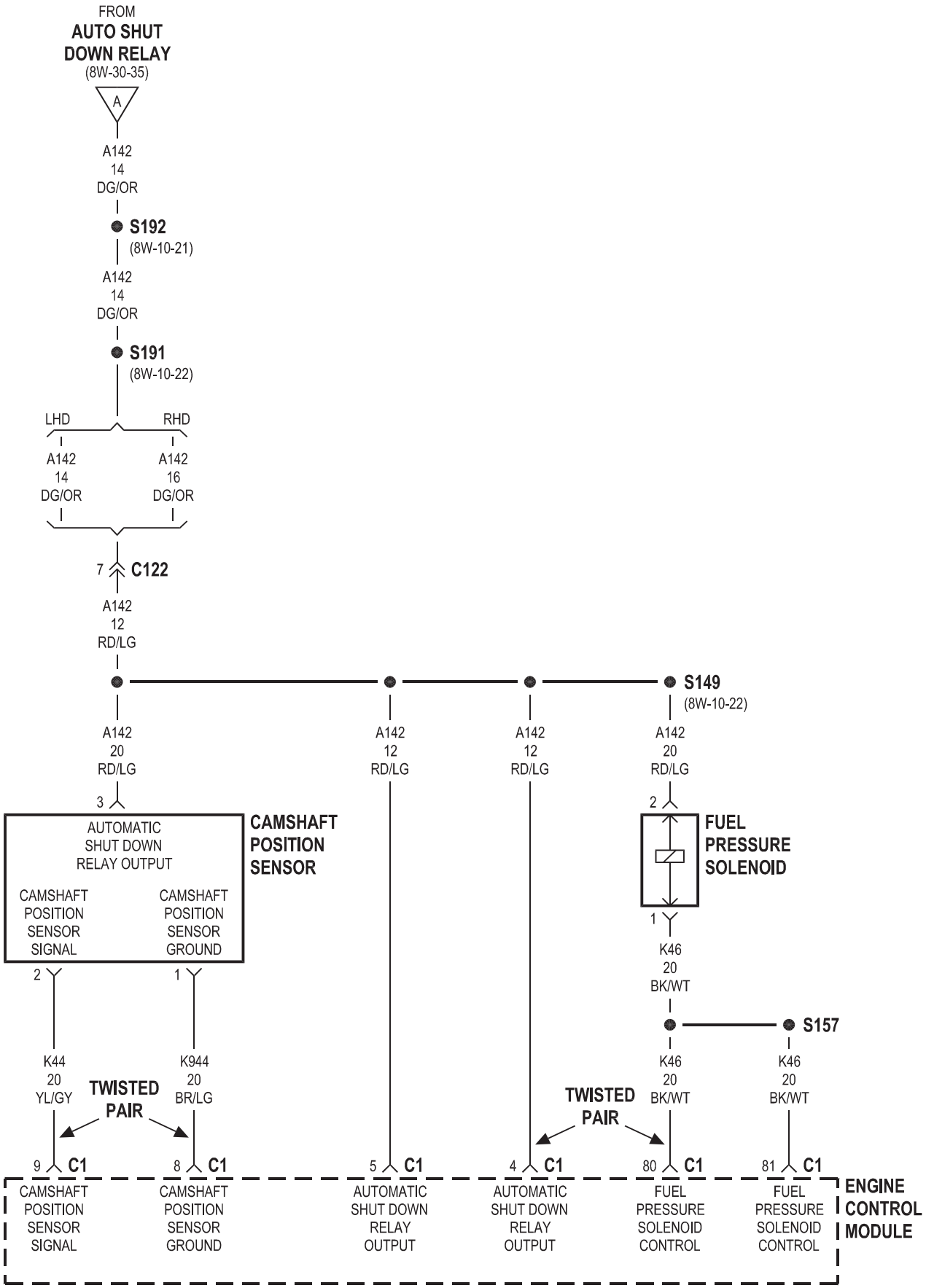
FROM
AUTO SHUT DOWN RELAY
(8W-30-35)
A
A142
14
DG/OR
S192
(8W-10-21)
A142
14
DG/OR
S191
(8W-10-22)
LHD
RHD
A142
14
DG/OR
A142
16
DG/OR
7
C122
A142
12
RD/LG
S149
(8W-10-22)
A142
20
RD/LG
A142
12
RD/LG
A142
12
RD/LG
A142
20
RD/LG
3
AUTOMATIC
SHUT DOWN
RELAY OUTPUT
CAMSHAFT
POSITION
SENSOR
SIGNAL
CAMSHAFT
POSITION
SENSOR
GROUND
CAMSHAFT
POSITION
SENSOR
2
FUEL
PRESSURE
SOLENOID
1
K46
20
BK/WT
S157
2
1
K44
20
YL/GY
TWISTED
PAIR
K944
20
BR/LG
K46
20
BK/WT
TWISTED
PAIR
K46
20
BK/WT
9 C1
8 C1
5 C1
4 C1
80 C1
81 C1
CAMSHAFT
POSITION
SENSOR
SIGNAL
CAMSHAFT
POSITION
SENSOR
GROUND
AUTOMATIC
SHUT DOWN
RELAY
OUTPUT
AUTOMATIC
SHUT DOWN
RELAY
OUTPUT
FUEL
PRESSURE
SOLENOID
CONTROL
FUEL
PRESSURE
SOLENOID
CONTROL
ENGINE
CONTROL
MODULE

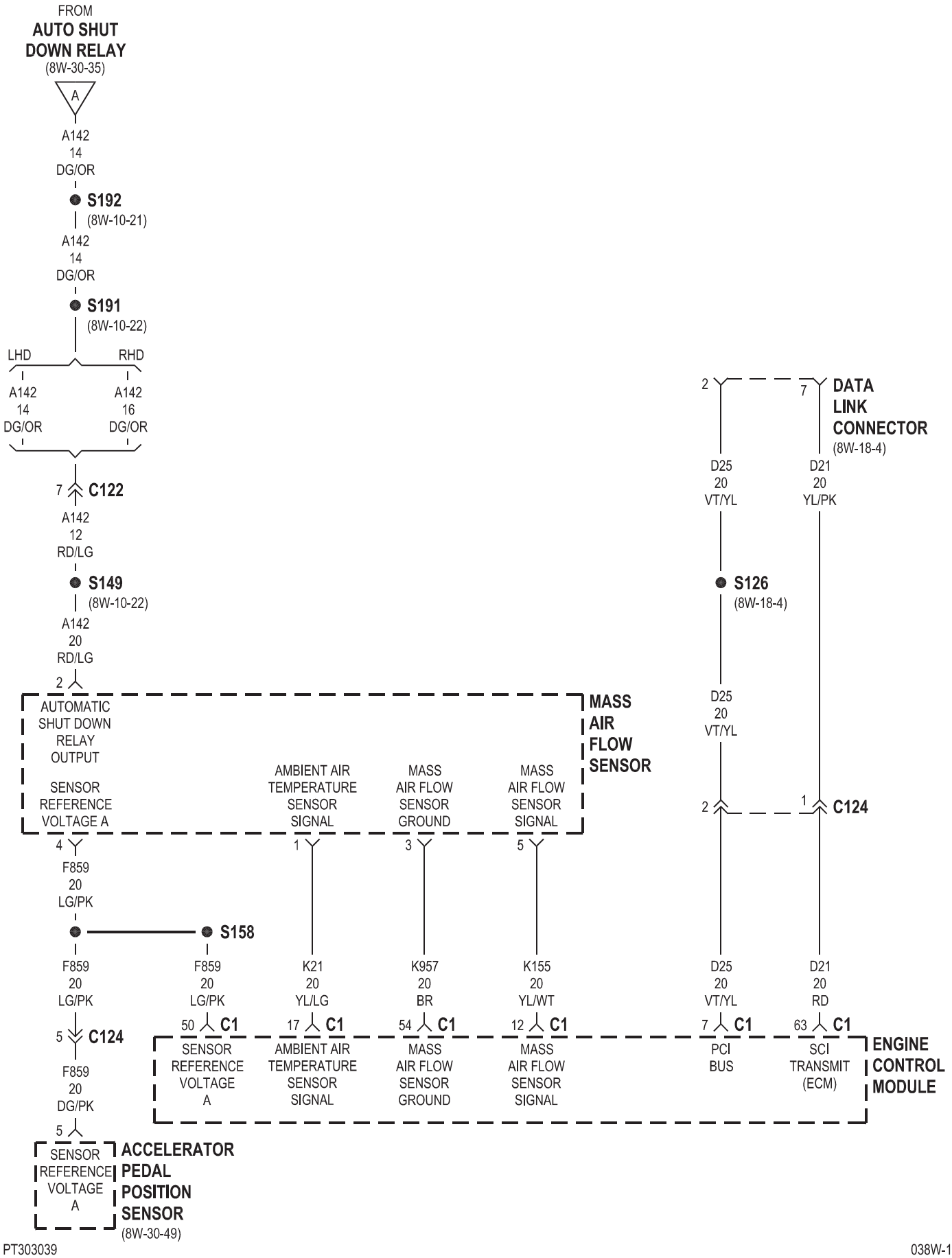
FROM
AUTO SHUT DOWN RELAY
(8W-30-35)
A
A142
14
DG/OR
S192
(8W-10-21)
A142
14
DG/OR
S191
(8W-10-22)
LHD
RHD
A142
14
DG/OR
A142
16
DG/OR
7
C122
A142
12
RD/LG
S149
(8W-10-22)
A142
20
RD/LG
2
AUTOMATIC SHUT DOWN RELAY OUTPUT
SENSOR REFERENCE VOLTAGE A
AMBIENT AIR TEMPERATURE SENSOR SIGNAL
MASS AIR FLOW SENSOR GROUND
MASS AIR FLOW SENSOR SIGNAL
MASS AIR FLOW SENSOR
4
F859
20
LG/PK
S158
F859
20
LG/PK
F859
20
LG/PK
5
C124
F859
20
DG/PK
5
SENSOR REFERENCE VOLTAGE A
ACCELERATOR PEDAL POSITION SENSOR
(8W-30-49)
1
K21
20
YL/LG
3
K957
20
BR
5
K155
20
YL/WT
50
C1
17
C1
54
C1
12
C1
SENSOR REFERENCE VOLTAGE A
AMBIENT AIR TEMPERATURE SENSOR SIGNAL
MASS AIR FLOW SENSOR GROUND
MASS AIR FLOW SENSOR SIGNAL
2
7
DATA LINK CONNECTOR
(8W-18-4)
D25
20
VT/YL
D21
20
YL/PK
S126
(8W-18-4)
D25
20
VT/YL
2
1
C124
D25
20
VT/YL
D21
20
RD
7
C1
63
C1
PCI BUS
SCI TRANSMIT (ECM)
ENGINE CONTROL MODULE

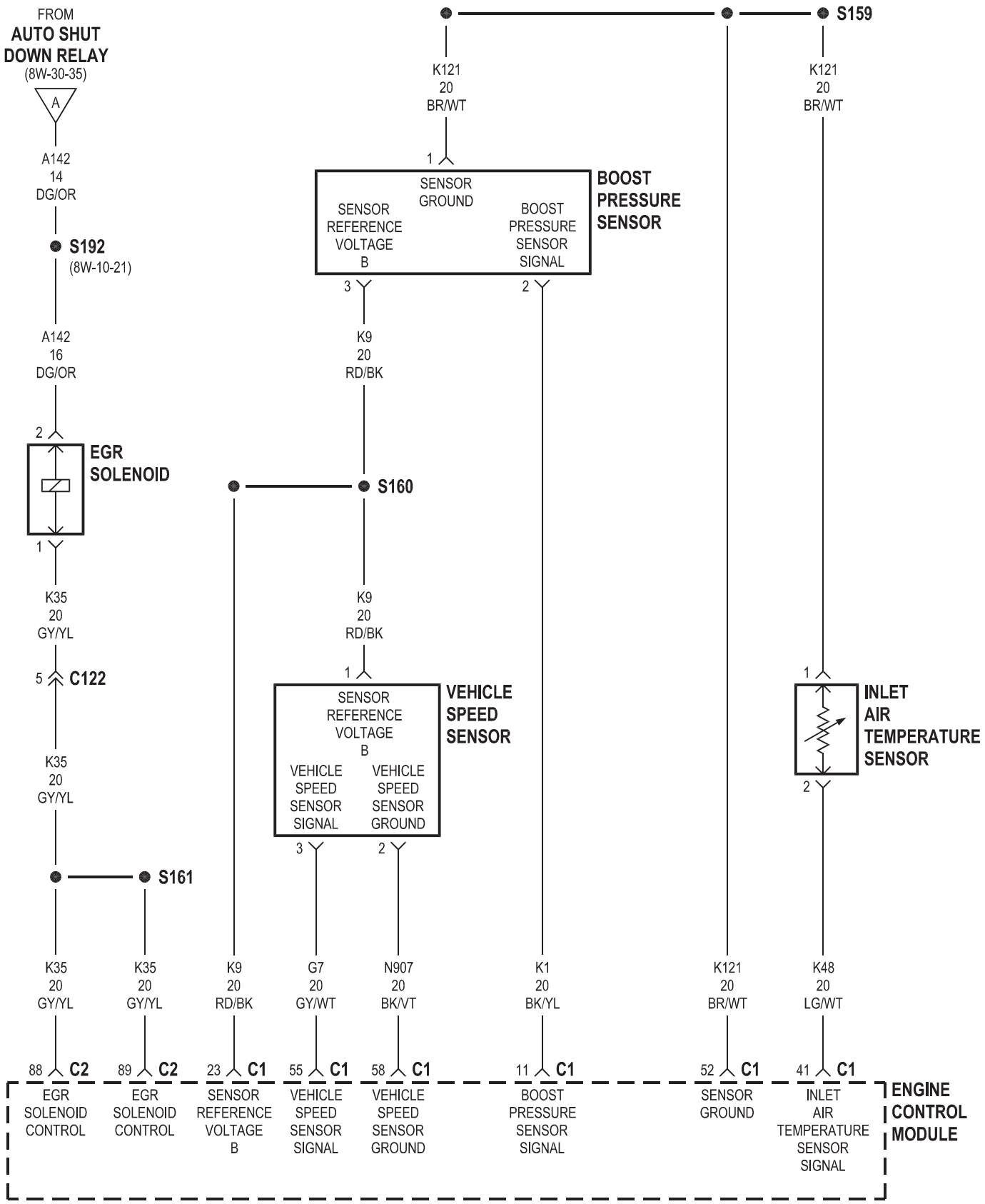
FROM
AUTO SHUT DOWN RELAY
(8W-30-35)
A
A142
14
DG/OR
S192
(8W-10-21)
A142
16
DG/OR
2
EGR SOLENOID
1
K35
20
GY/YL
5
C122
K35
20
GY/YL
S161
K35
20
GY/YL
K35
20
GY/YL
K9
20
RD/BK
S160
K9
20
RD/BK
1
SENSOR REFERENCE VOLTAGE B
VEHICLE SPEED SENSOR SIGNAL
VEHICLE SPEED SENSOR GROUND
VEHICLE SPEED SENSOR
3
2
G7
20
GY/WT
N907
20
BK/VT
K121
20
BR/WT
1
SENSOR GROUND
SENSOR REFERENCE VOLTAGE B
BOOST PRESSURE SENSOR SIGNAL
BOOST PRESSURE SENSOR
3
2
K9
20
RD/BK
K1
20
BK/YL
S159
K121
20
BR/WT
K121
20
BR/WT
1
INLET AIR TEMPERATURE SENSOR
2
K48
20
LG/WT
88 C2
EGR SOLENOID CONTROL
89 C2
EGR SOLENOID CONTROL
23 C1
SENSOR REFERENCE VOLTAGE B
55 C1
VEHICLE SPEED SENSOR SIGNAL
58 C1
VEHICLE SPEED SENSOR GROUND
11 C1
BOOST PRESSURE SENSOR SIGNAL
52 C1
SENSOR GROUND
41 C1
INLET AIR TEMPERATURE SENSOR SIGNAL
ENGINE CONTROL MODULE

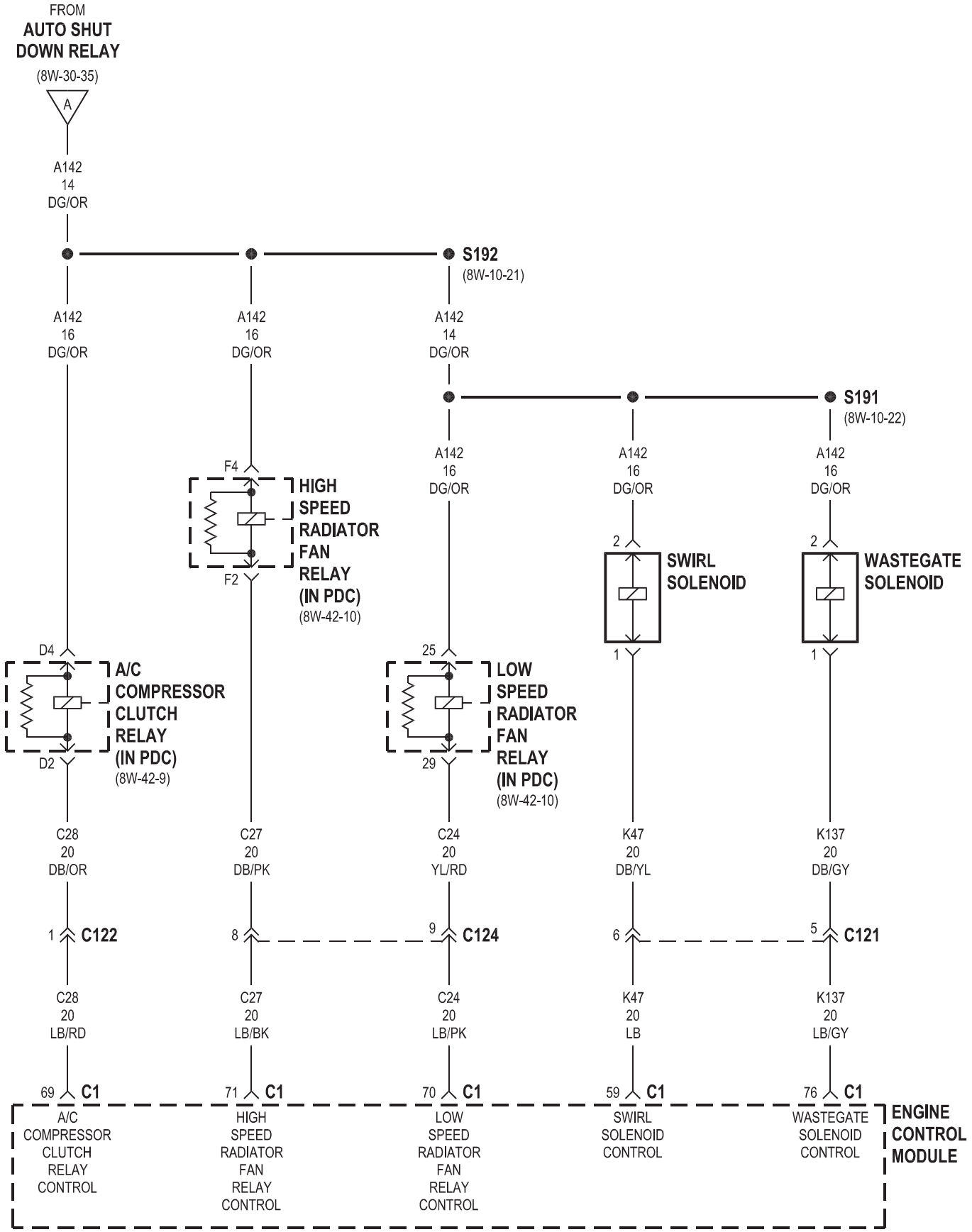
FROM
AUTO SHUT DOWN RELAY
(8W-30-35)
A
A142
14
DG/OR
S192
(8W-10-21)
A142
16
DG/OR
A142
16
DG/OR
A142
14
DG/OR
S191
(8W-10-22)
A142
16
DG/OR
A142
16
DG/OR
A142
16
DG/OR
F4
F2
HIGH SPEED RADIATOR FAN RELAY (IN PDC)
(8W-42-10)
2
1
SWIRL SOLENOID
2
1
WASTEGATE SOLENOID
D4
D2
A/C COMPRESSOR CLUTCH RELAY (IN PDC)
(8W-42-9)
25
29
LOW SPEED RADIATOR FAN RELAY (IN PDC)
(8W-42-10)
C28
20
DB/OR
C27
20
DB/PK
C24
20
YL/RD
K47
20
DB/YL
K137
20
DB/GY
1 C122
8
9 C124
6
5 C121
C28
20
LB/RD
C27
20
LB/BK
C24
20
LB/PK
K47
20
LB
K137
20
LB/GY
69 C1
71 C1
70 C1
59 C1
76 C1
A/C COMPRESSOR CLUTCH RELAY CONTROL
HIGH SPEED RADIATOR FAN RELAY CONTROL
LOW SPEED RADIATOR FAN RELAY CONTROL
SWIRL SOLENOID CONTROL
WASTEGATE SOLENOID CONTROL
ENGINE CONTROL MODULE

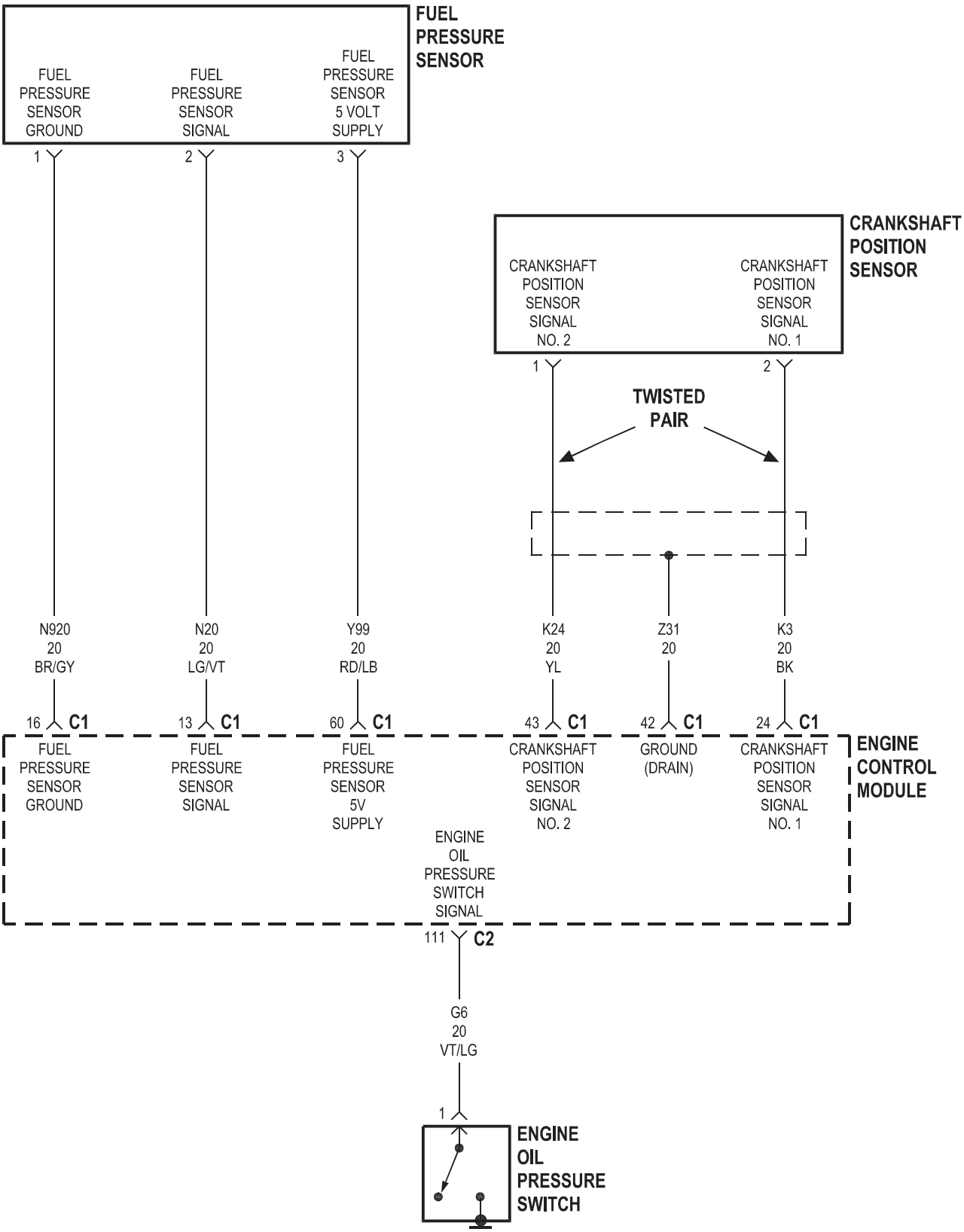
FUEL PRESSURE SENSOR
FUEL PRESSURE SENSOR GROUND
FUEL PRESSURE SENSOR SIGNAL
FUEL PRESSURE SENSOR 5 VOLT SUPPLY
1
2
3
CRANKSHAFT POSITION SENSOR
CRANKSHAFT POSITION SENSOR SIGNAL NO. 2
CRANKSHAFT POSITION SENSOR SIGNAL NO. 1
1
2
TWISTED PAIR
N920 20 BR/GY
N20 20 LG/VT
Y99 20 RD/LB
K24 20 YL
Z31 20
K3 20 BK
16 C1
13 C1
60 C1
43 C1
42 C1
24 C1
ENGINE CONTROL MODULE
FUEL PRESSURE SENSOR GROUND
FUEL PRESSURE SENSOR SIGNAL
FUEL PRESSURE SENSOR 5V SUPPLY
CRANKSHAFT POSITION SENSOR SIGNAL NO. 2
GROUND (DRAIN)
CRANKSHAFT POSITION SENSOR SIGNAL NO. 1
ENGINE OIL PRESSURE SWITCH SIGNAL
111 C2
G6 20 VT/LG
1
ENGINE OIL PRESSURE SWITCH

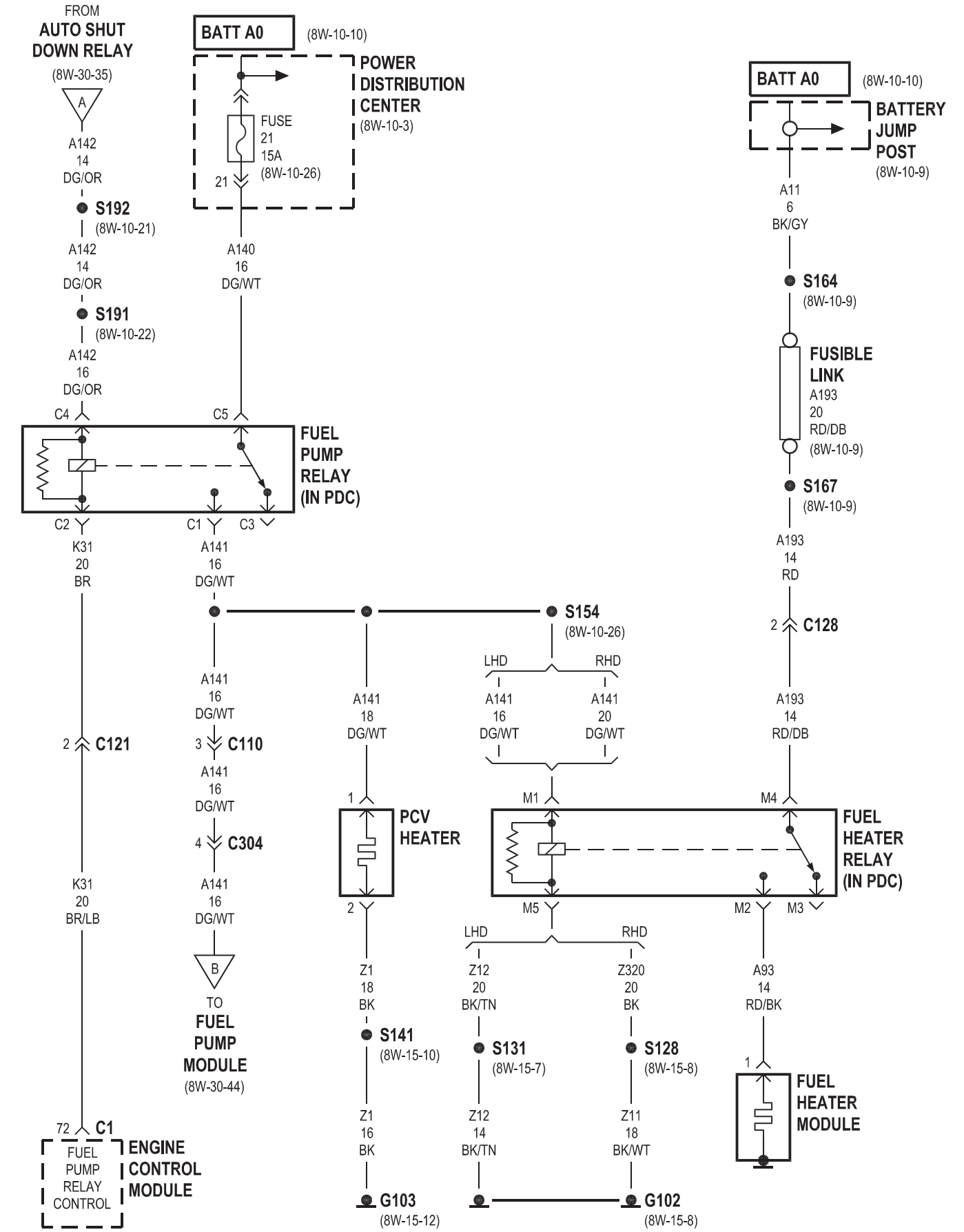
FROM
AUTO SHUT DOWN RELAY
(8W-30-35)
A
A142
14
DG/OR
S192
(8W-10-21)
A142
14
DG/OR
S191
(8W-10-22)
A142
16
DG/OR
BATT A0
(8W-10-10)
POWER DISTRIBUTION CENTER
(8W-10-3)
FUSE
21
15A
(8W-10-26)
21
A140
16
DG/WT
BATT A0
(8W-10-10)
BATTERY JUMP POST
(8W-10-9)
A11
6
BK/GY
S164
(8W-10-9)
FUSIBLE LINK
A193
20
RD/DB
(8W-10-9)
S167
(8W-10-9)
A193
14
RD
2
C128
C4
C5
FUEL PUMP RELAY (IN PDC)
C2
C1
C3
K31
20
BR
A141
16
DG/WT
S154
(8W-10-26)
LHD
RHD
A141
16
DG/WT
A141
20
DG/WT
A141
16
DG/WT
A141
18
DG/WT
A193
14
RD/DB
2
C121
3
C110
A141
16
DG/WT
4
C304
A141
16
DG/WT
1
PCV HEATER
2
M1
M4
FUEL HEATER RELAY (IN PDC)
M5
M2
M3
K31
20
BR/LB
B
TO
FUEL PUMP MODULE
(8W-30-44)
LHD
RHD
Z1
18
BK
Z12
20
BK/TN
Z320
20
BK
A93
14
RD/BK
S141
(8W-15-10)
S131
(8W-15-7)
S128
(8W-15-8)
1
FUEL HEATER MODULE
72
C1
FUEL PUMP RELAY CONTROL
ENGINE CONTROL MODULE
Z1
16
BK
Z12
14
BK/TN
Z11
18
BK/WT
G103
(8W-15-12)
G102
(8W-15-8)

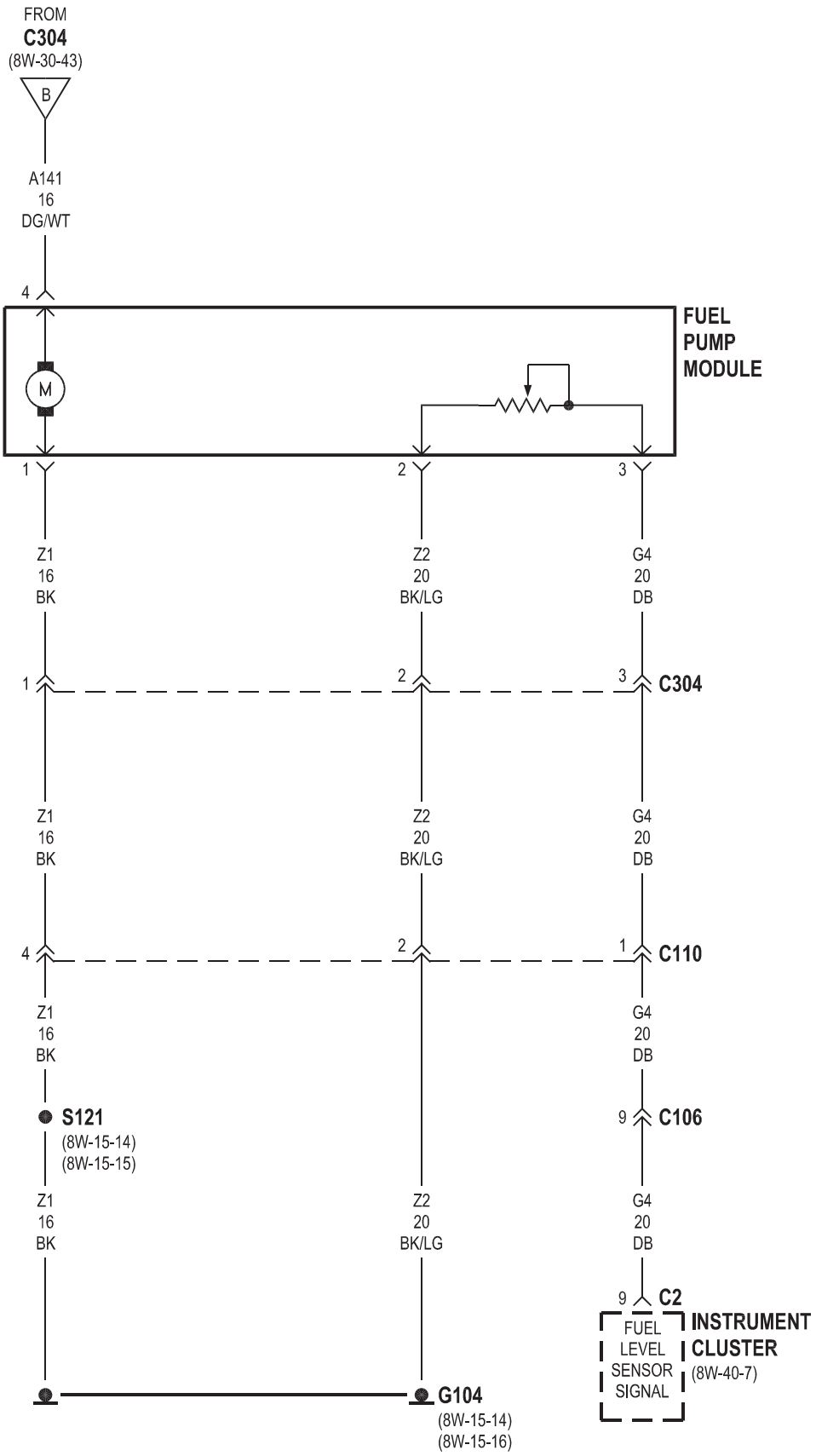
FROM
C304
(8W-30-43)
B
A141
16
DG/WT
4
M
FUEL
PUMP
MODULE
1
2
3
Z1
16
BK
Z2
20
BK/LG
G4
20
DB
1
2
3
C304
Z1
16
BK
Z2
20
BK/LG
G4
20
DB
4
2
1
C110
Z1
16
BK
G4
20
DB
S121
(8W-15-14)
(8W-15-15)
9
C106
Z1
16
BK
Z2
20
BK/LG
G4
20
DB
9
C2
FUEL
LEVEL
SENSOR
SIGNAL
INSTRUMENT
CLUSTER
(8W-40-7)
G104
(8W-15-14)
(8W-15-16)

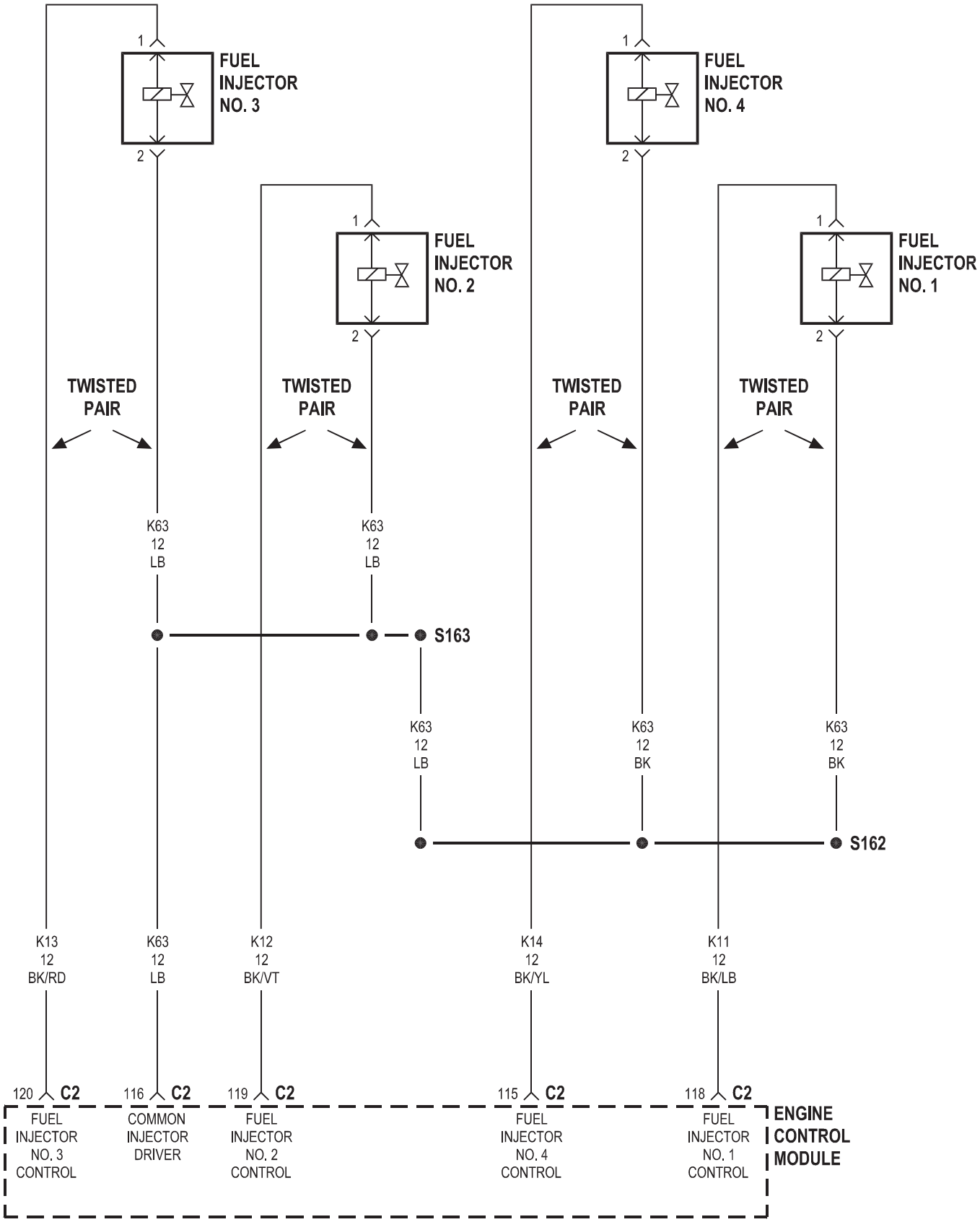
FUEL INJECTOR NO. 3
FUEL INJECTOR NO. 4
FUEL INJECTOR NO. 2
FUEL INJECTOR NO. 1
1
2
TWISTED PAIR
K63 12 LB
S163
K63 12 BK
S162
K13 12 BK/RD
K12 12 BK/VT
K14 12 BK/YL
K11 12 BK/LB
120 C2
116 C2
119 C2
115 C2
118 C2
FUEL INJECTOR NO. 3 CONTROL
COMMON INJECTOR DRIVER
FUEL INJECTOR NO. 2 CONTROL
FUEL INJECTOR NO. 4 CONTROL
FUEL INJECTOR NO. 1 CONTROL
ENGINE CONTROL MODULE

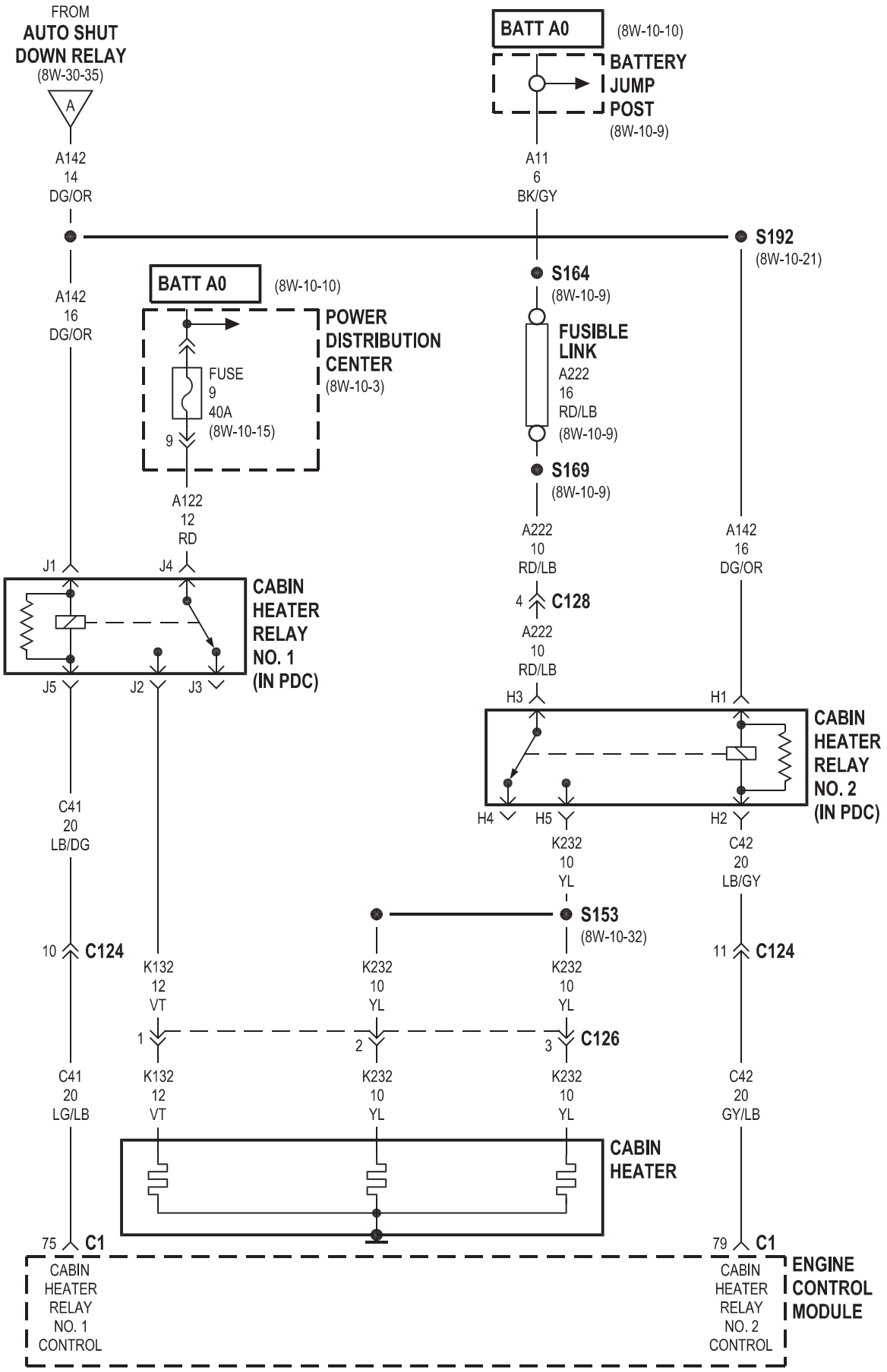
FROM
AUTO SHUT DOWN RELAY
(8W-30-35)
A
A142
14
DG/OR
BATT A0
(8W-10-10)
BATTERY JUMP POST
(8W-10-9)
A11
6
BK/GY
S192
(8W-10-21)
A142
16
DG/OR
BATT A0
(8W-10-10)
POWER DISTRIBUTION CENTER
(8W-10-3)
FUSE
9
40A
(8W-10-15)
9
A122
12
RD
S164
(8W-10-9)
FUSIBLE LINK
A222
16
RD/LB
(8W-10-9)
S169
(8W-10-9)
A222
10
RD/LB
4
C128
A222
10
RD/LB
A142
16
DG/OR
J1
J4
CABIN HEATER RELAY NO. 1 (IN PDC)
J5
J2
J3
H3
H1
CABIN HEATER RELAY NO. 2 (IN PDC)
H4
H5
H2
C41
20
LB/DG
K232
10
YL
C42
20
LB/GY
S153
(8W-10-32)
10
C124
K132
12
VT
K232
10
YL
K232
10
YL
11
C124
1
2
3
C126
C41
20
LG/LB
K132
12
VT
K232
10
YL
K232
10
YL
C42
20
GY/LB
CABIN HEATER
75
C1
79
C1
CABIN HEATER RELAY NO. 1 CONTROL
CABIN HEATER RELAY NO. 2 CONTROL
ENGINE CONTROL MODULE

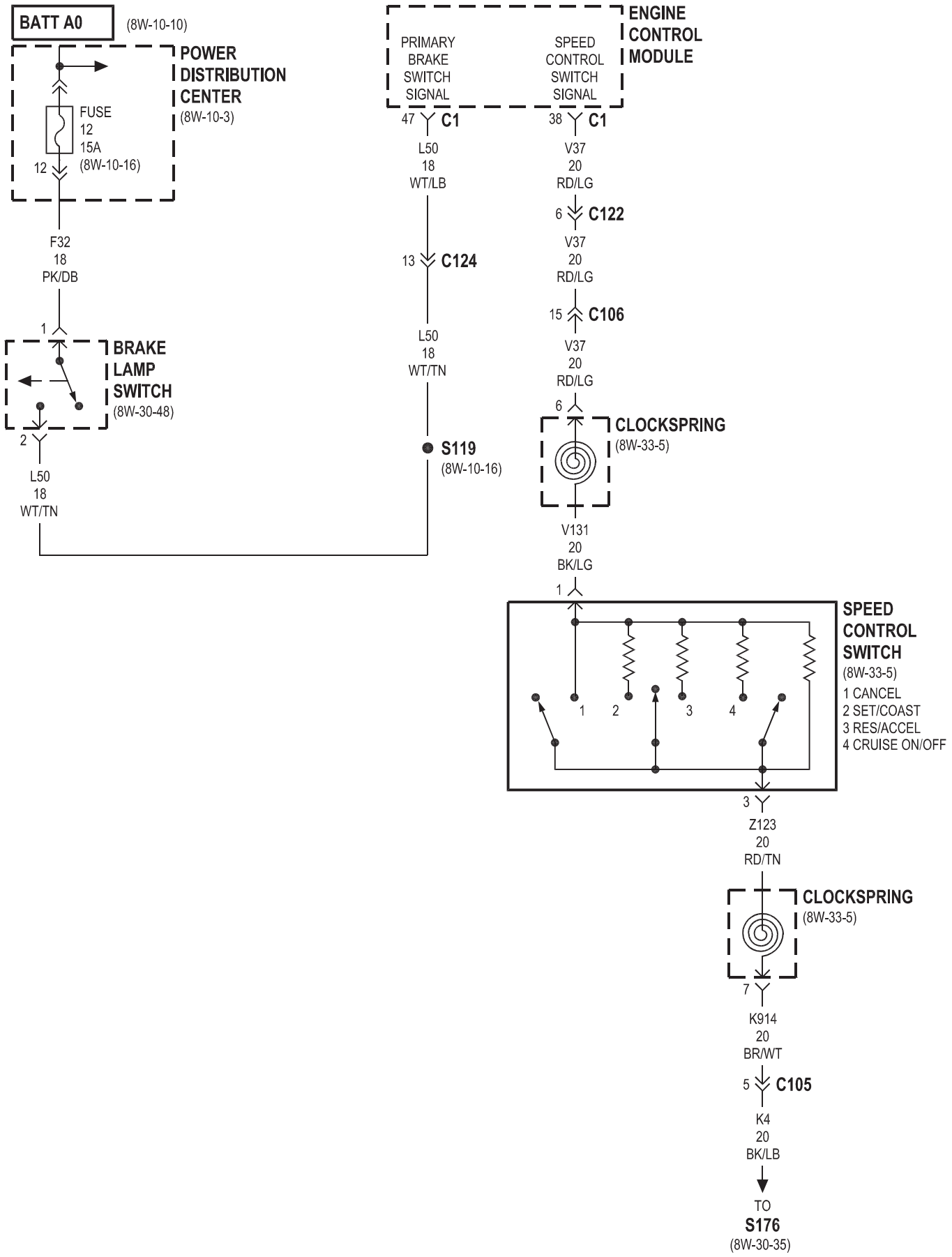
BATT A0
(8W-10-10)
POWER DISTRIBUTION CENTER
(8W-10-3)
FUSE 12 15A
(8W-10-16)
12
F32 18 PK/DB
1
BRAKE LAMP SWITCH
(8W-30-48)
2
L50 18 WT/TN
ENGINE CONTROL MODULE
PRIMARY BRAKE SWITCH SIGNAL
SPEED CONTROL SWITCH SIGNAL
47 C1
38 C1
L50 18 WT/LB
V37 20 RD/LG
6 C122
13 C124
V37 20 RD/LG
15 C106
L50 18 WT/TN
V37 20 RD/LG
6
S119
(8W-10-16)
CLOCKSPRING
(8W-33-5)
V131 20 BK/LG
1
SPEED CONTROL SWITCH
(8W-33-5)
1 CANCEL
2 SET/COAST
3 RES/ACCEL
4 CRUISE ON/OFF
1 2 3 4
3
Z123 20 RD/TN
CLOCKSPRING
(8W-33-5)
7
K914 20 BR/WT
5 C105
K4 20 BK/LB
TO
S176
(8W-30-35)

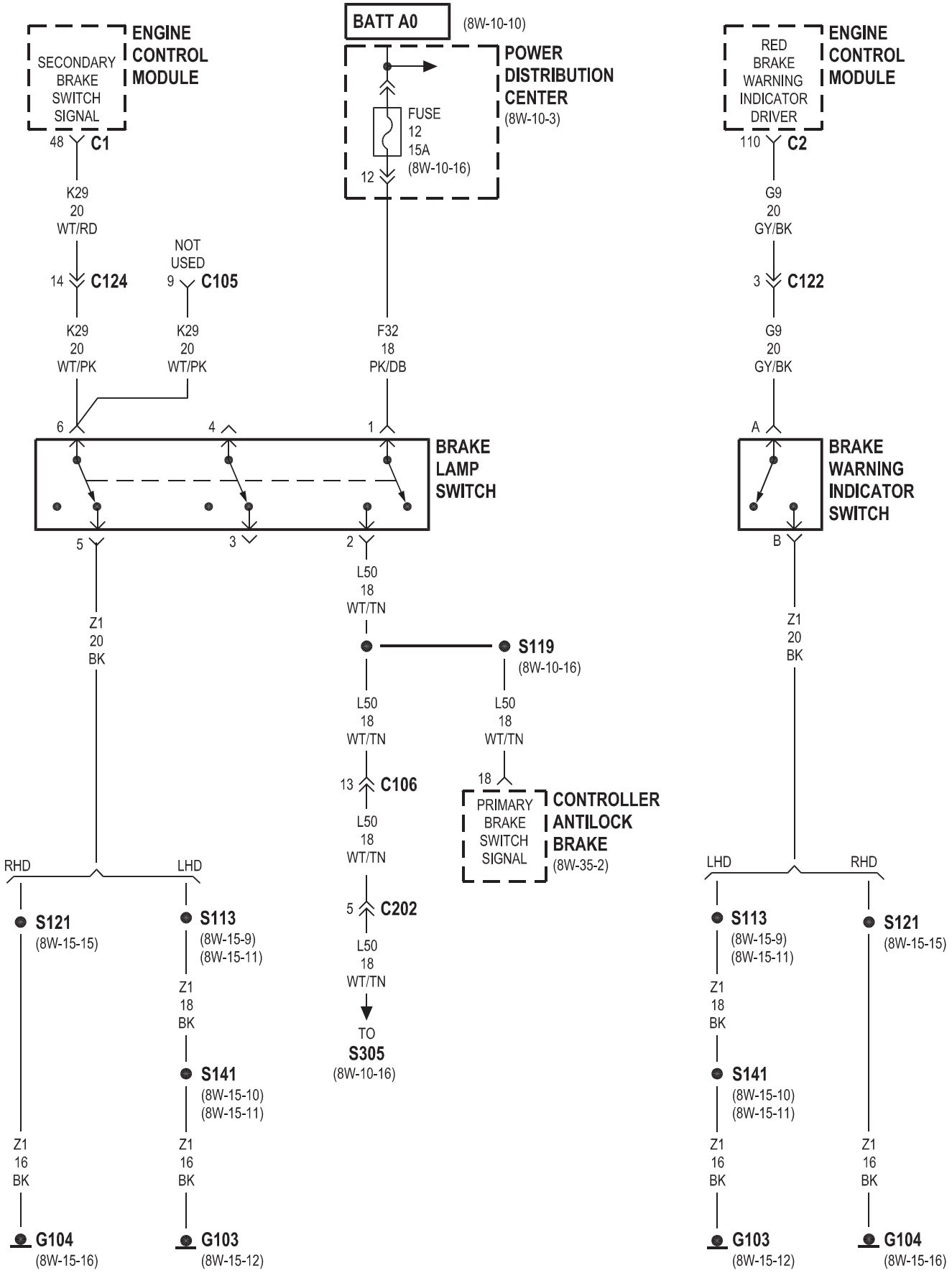
BATT A0
(8W-10-10)
ENGINE CONTROL MODULE
SECONDARY BRAKE SWITCH SIGNAL
48
C1
K29
20
WT/RD
14
C124
K29
20
WT/PK
NOT USED
9
C105
K29
20
WT/PK
POWER DISTRIBUTION CENTER
(8W-10-3)
FUSE
12
15A
(8W-10-16)
12
F32
18
PK/DB
ENGINE CONTROL MODULE
RED BRAKE WARNING INDICATOR DRIVER
110
C2
G9
20
GY/BK
3
C122
G9
20
GY/BK
6
4
1
BRAKE LAMP SWITCH
5
3
2
A
BRAKE WARNING INDICATOR SWITCH
B
L50
18
WT/TN
Z1
20
BK
S119
(8W-10-16)
L50
18
WT/TN
L50
18
WT/TN
13
C106
18
PRIMARY BRAKE SWITCH SIGNAL
CONTROLLER ANTILOCK BRAKE
(8W-35-2)
L50
18
WT/TN
5
C202
L50
18
WT/TN
TO
S305
(8W-10-16)
Z1
20
BK
RHD
LHD
S121
(8W-15-15)
S113
(8W-15-9)
(8W-15-11)
Z1
18
BK
S141
(8W-15-10)
(8W-15-11)
Z1
16
BK
G104
(8W-15-16)
Z1
16
BK
G103
(8W-15-12)
LHD
RHD
S113
(8W-15-9)
(8W-15-11)
S121
(8W-15-15)
Z1
18
BK
S141
(8W-15-10)
(8W-15-11)
Z1
16
BK
G103
(8W-15-12)
Z1
16
BK
G104
(8W-15-16)

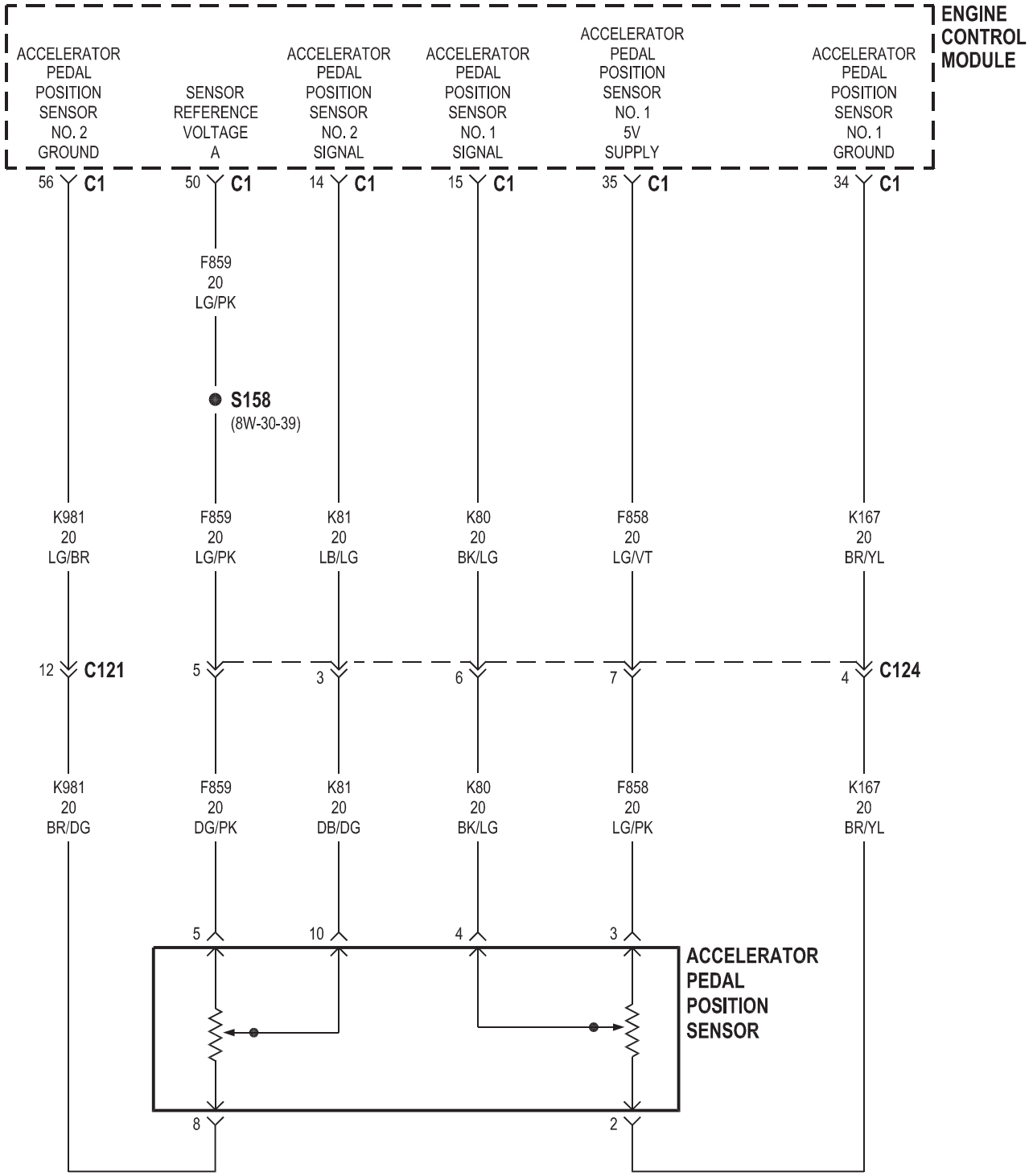
ENGINE CONTROL MODULE
ACCELERATOR PEDAL POSITION SENSOR NO. 2 GROUND
SENSOR REFERENCE VOLTAGE A
ACCELERATOR PEDAL POSITION SENSOR NO. 2 SIGNAL
ACCELERATOR PEDAL POSITION SENSOR NO. 1 SIGNAL
ACCELERATOR PEDAL POSITION SENSOR NO. 1 5V SUPPLY
ACCELERATOR PEDAL POSITION SENSOR NO. 1 GROUND
56 C1
50 C1
14 C1
15 C1
35 C1
34 C1
F859 20 LG/PK
S158
(8W-30-39)
K981 20 LG/BR
F859 20 LG/PK
K81 20 LB/LG
K80 20 BK/LG
F858 20 LG/VT
K167 20 BR/YL
12 C121
5
3
6
7
4 C124
K981 20 BR/DG
F859 20 DG/PK
K81 20 DB/DG
K80 20 BK/LG
F858 20 LG/PK
K167 20 BR/YL
5
10
4
3
ACCELERATOR PEDAL POSITION SENSOR
8
2

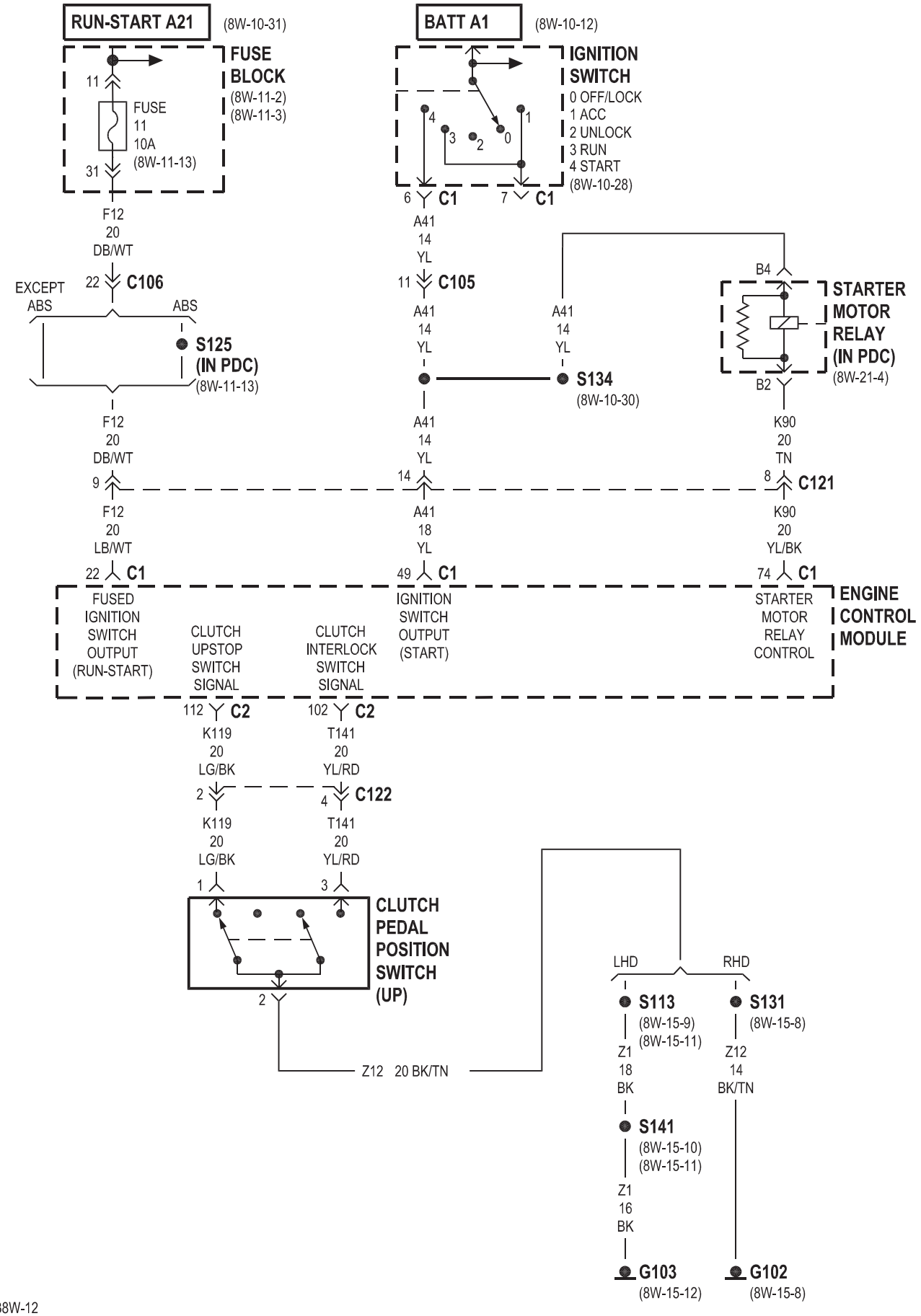
RUN-START A21
(8W-10-31)
FUSE BLOCK
(8W-11-2)
(8W-11-3)
11
FUSE
11
10A
(8W-11-13)
31
F12
20
DB/WT
22
C106
EXCEPT ABS
ABS
S125
(IN PDC)
(8W-11-13)
F12
20
DB/WT
9
F12
20
LB/WT
22
C1
BATT A1
(8W-10-12)
IGNITION SWITCH
0 OFF/LOCK
1 ACC
2 UNLOCK
3 RUN
4 START
(8W-10-28)
6
C1
7
C1
A41
14
YL
11
C105
A41
14
YL
A41
14
YL
S134
(8W-10-30)
A41
14
YL
14
A41
18
YL
49
C1
B4
STARTER MOTOR RELAY (IN PDC)
(8W-21-4)
B2
K90
20
TN
8
C121
K90
20
YL/BK
74
C1
ENGINE CONTROL MODULE
FUSED IGNITION SWITCH OUTPUT (RUN-START)
CLUTCH UPSTOP SWITCH SIGNAL
CLUTCH INTERLOCK SWITCH SIGNAL
IGNITION SWITCH OUTPUT (START)
STARTER MOTOR RELAY CONTROL
112
C2
K119
20
LG/BK
102
C2
T141
20
YL/RD
2
4
C122
K119
20
LG/BK
T141
20
YL/RD
1
3
CLUTCH PEDAL POSITION SWITCH (UP)
2
Z12 20 BK/TN
LHD
RHD
S113
(8W-15-9)
(8W-15-11)
S131
(8W-15-8)
Z1
18
BK
Z12
14
BK/TN
S141
(8W-15-10)
(8W-15-11)
Z1
16
BK
G103
(8W-15-12)
G102
(8W-15-8)

8W-31 TRANSMISSION CONTROL SYSTEM

Component	Page
Autostick Switch	8W-31-8
Brake Lamp Switch	8W-31-3
Brake Transmission Shift Interlock Solenoid	8W-31-3
Controller Antilock Brake	8W-31-7
Data Link Connector	8W-31-7
Fuse 6	8W-31-4
Fuse 11	8W-31-2
Fuse 12	8W-31-3
Fuse 13	8W-31-2
Fuse 15	8W-31-2
Fuse Block	8W-31-2, 3, 4
G102	8W-31-2
G103	8W-31-2
G203	8W-31-8
Ignition Switch	8W-31-8
Input Speed Sensor	8W-31-3
Instrument Cluster	8W-31-8
Left Back-Up Lamp	8W-31-4
Output Speed Sensor	8W-31-3
Power Distribution Center	8W-31-2, 5, 6
Powertrain Control Module	8W-31-2, 3, 4, 5, 6, 7, 8
Right Back-Up Lamp	8W-31-4
Rear Window Defogger Switch	8W-31-4
Transmission Control Relay	8W-31-2, 5, 6
Transmission Range Sensor	8W-31-3, 4
Transmission Solenoid/Pressure Switch Assembly	8W-31-5, 6

2.0L/2.4L

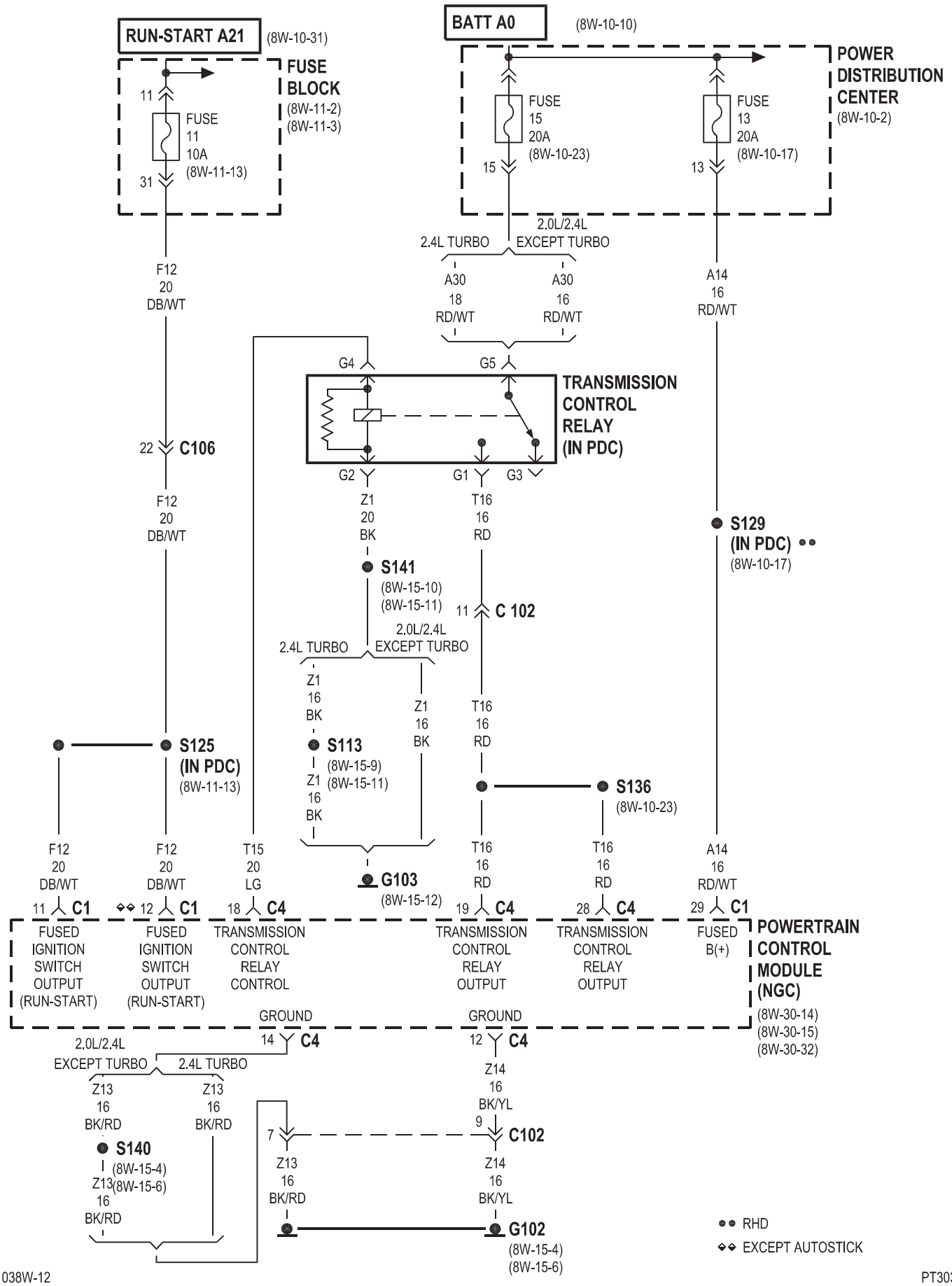
RUN-START A21
(8W-10-31)
FUSE BLOCK
(8W-11-2)
(8W-11-3)
11
FUSE 11 10A
(8W-11-13)
31
F12 20 DB/WT
BATT A0
(8W-10-10)
POWER DISTRIBUTION CENTER
(8W-10-2)
FUSE 15 20A
(8W-10-23)
15
FUSE 13 20A
(8W-10-17)
13
2.4L TURBO
2.0L/2.4L EXCEPT TURBO
A30 18 RD/WT
A30 16 RD/WT
A14 16 RD/WT
G4
G5
TRANSMISSION CONTROL RELAY (IN PDC)
G2
G1
G3
22
C106
F12 20 DB/WT
Z1 20 BK
T16 16 RD
S129 (IN PDC) ••
(8W-10-17)
S141
(8W-15-10)
(8W-15-11)
11
C 102
2.4L TURBO
2.0L/2.4L EXCEPT TURBO
Z1 16 BK
Z1 16 BK
T16 16 RD
S125 (IN PDC)
(8W-11-13)
S113
(8W-15-9)
(8W-15-11)
Z1 16 BK
S136
(8W-10-23)
F12 20 DB/WT
F12 20 DB/WT
T15 20 LG
G103
(8W-15-12)
T16 16 RD
T16 16 RD
A14 16 RD/WT
11 C1
12 C1
18 C4
19 C4
28 C4
29 C1
FUSED IGNITION SWITCH OUTPUT (RUN-START)
FUSED IGNITION SWITCH OUTPUT (RUN-START)
TRANSMISSION CONTROL RELAY CONTROL
TRANSMISSION CONTROL RELAY OUTPUT
TRANSMISSION CONTROL RELAY OUTPUT
FUSED B(+)
POWERTRAIN CONTROL MODULE (NGC)
(8W-30-14)
(8W-30-15)
(8W-30-32)
GROUND
GROUND
14 C4
12 C4
2.0L/2.4L EXCEPT TURBO
2.4L TURBO
Z13 16 BK/RD
Z13 16 BK/RD
Z14 16 BK/YL
7
9
C102
S140
(8W-15-4)
(8W-15-6)
Z13 16 BK/RD
Z13 16 BK/RD
Z14 16 BK/YL
G102
(8W-15-4)
(8W-15-6)
•• RHD
◆◆ EXCEPT AUTOSTICK

2.0L/2.4L

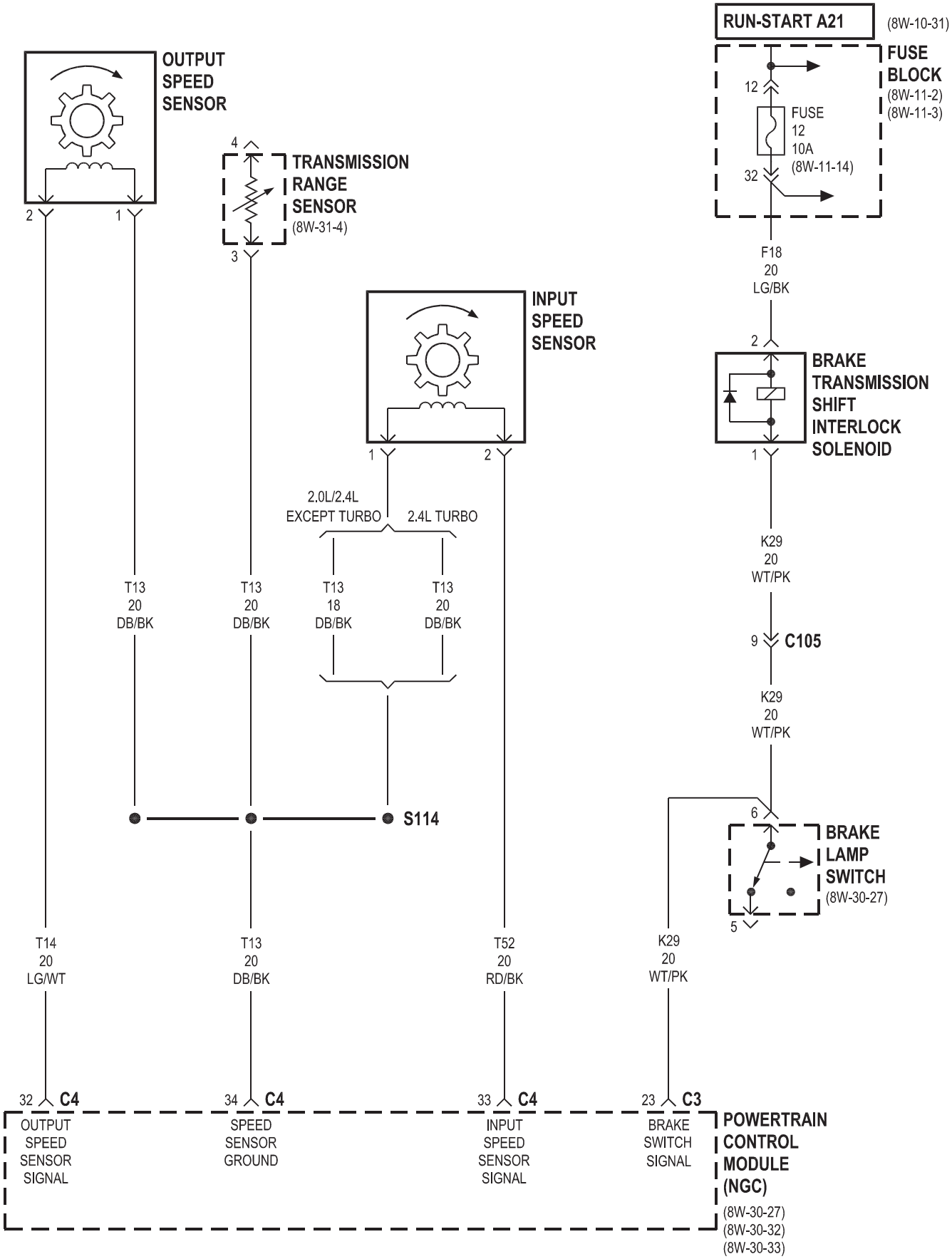
RUN-START A21
(8W-10-31)
FUSE BLOCK
(8W-11-2)
(8W-11-3)
12
FUSE 12 10A
(8W-11-14)
32
F18 20 LG/BK
OUTPUT SPEED SENSOR
2
1
4
TRANSMISSION RANGE SENSOR
(8W-31-4)
3
INPUT SPEED SENSOR
1
2
2
BRAKE TRANSMISSION SHIFT INTERLOCK SOLENOID
1
2.0L/2.4L EXCEPT TURBO
2.4L TURBO
K29 20 WT/PK
T13 20 DB/BK
T13 20 DB/BK
T13 18 DB/BK
T13 20 DB/BK
9
C105
K29 20 WT/PK
S114
6
BRAKE LAMP SWITCH
(8W-30-27)
5
T14 20 LG/WT
T13 20 DB/BK
T52 20 RD/BK
K29 20 WT/PK
32 C4
34 C4
33 C4
23 C3
OUTPUT SPEED SENSOR SIGNAL
SPEED SENSOR GROUND
INPUT SPEED SENSOR SIGNAL
BRAKE SWITCH SIGNAL
POWERTRAIN CONTROL MODULE (NGC)
(8W-30-27)
(8W-30-32)
(8W-30-33)

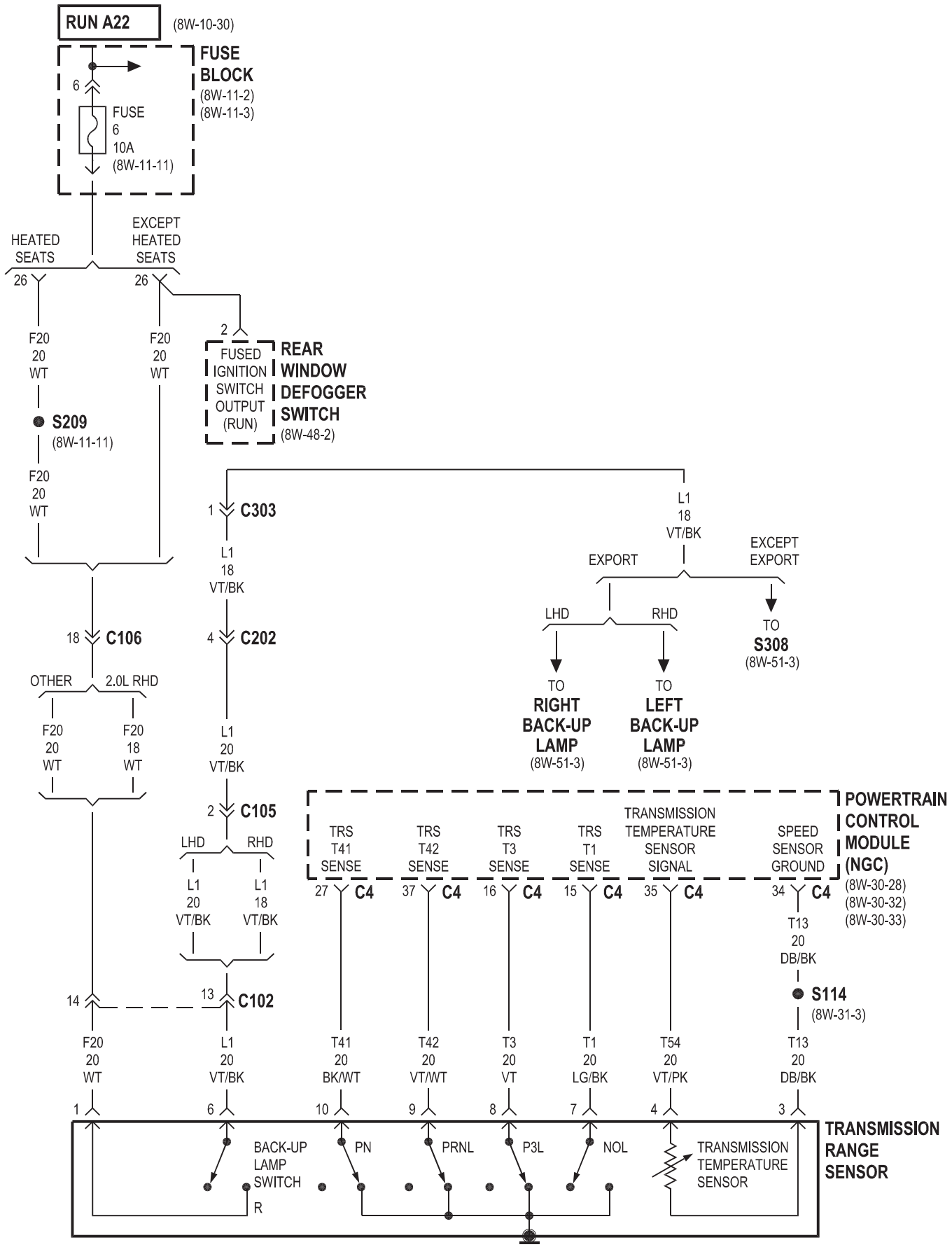
RUN A22
(8W-10-30)
FUSE BLOCK
(8W-11-2)
(8W-11-3)
6
FUSE 6 10A
(8W-11-11)
HEATED SEATS
EXCEPT HEATED SEATS
26
26
F20 20 WT
F20 20 WT
2
FUSED IGNITION SWITCH OUTPUT (RUN)
REAR WINDOW DEFOGGER SWITCH
(8W-48-2)
S209
(8W-11-11)
F20 20 WT
1 C303
L1 18 VT/BK
L1 18 VT/BK
EXPORT
EXCEPT EXPORT
LHD
RHD
TO S308
(8W-51-3)
18 C106
4 C202
OTHER
2.0L RHD
TO RIGHT BACK-UP LAMP
(8W-51-3)
TO LEFT BACK-UP LAMP
(8W-51-3)
F20 20 WT
F20 18 WT
L1 20 VT/BK
2 C105
LHD
RHD
L1 20 VT/BK
L1 18 VT/BK
POWERTRAIN CONTROL MODULE (NGC)
(8W-30-28)
(8W-30-32)
(8W-30-33)
TRS T41 SENSE
TRS T42 SENSE
TRS T3 SENSE
TRS T1 SENSE
TRANSMISSION TEMPERATURE SENSOR SIGNAL
SPEED SENSOR GROUND
27 C4
37 C4
16 C4
15 C4
35 C4
34 C4
T13 20 DB/BK
S114
(8W-31-3)
14
13 C102
F20 20 WT
L1 20 VT/BK
T41 20 BK/WT
T42 20 VT/WT
T3 20 VT
T1 20 LG/BK
T54 20 VT/PK
T13 20 DB/BK
1
6
10
9
8
7
4
3
BACK-UP LAMP SWITCH
R
PN
PRNL
P3L
NOL
TRANSMISSION TEMPERATURE SENSOR
TRANSMISSION RANGE SENSOR

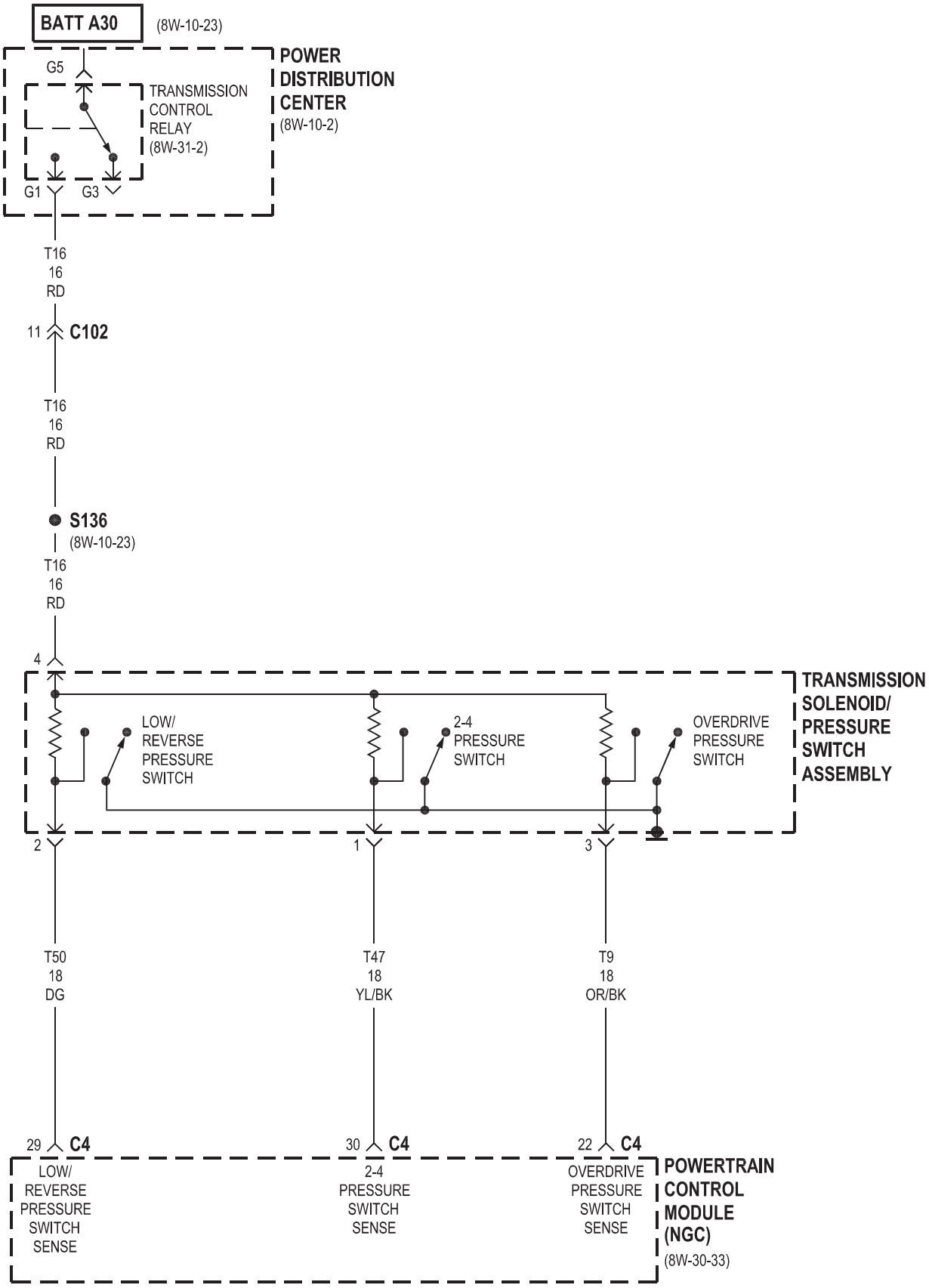
BATT A30
(8W-10-23)
G5
TRANSMISSION CONTROL RELAY (8W-31-2)
POWER DISTRIBUTION CENTER
(8W-10-2)
G1
G3
T16
16
RD
11
C102
T16
16
RD
S136
(8W-10-23)
T16
16
RD
4
LOW/ REVERSE PRESSURE SWITCH
2-4 PRESSURE SWITCH
OVERDRIVE PRESSURE SWITCH
TRANSMISSION SOLENOID/ PRESSURE SWITCH ASSEMBLY
2
1
3
T50
18
DG
T47
18
YL/BK
T9
18
OR/BK
29
C4
30
C4
22
C4
LOW/ REVERSE PRESSURE SWITCH SENSE
2-4 PRESSURE SWITCH SENSE
OVERDRIVE PRESSURE SWITCH SENSE
POWERTRAIN CONTROL MODULE (NGC)
(8W-30-33)

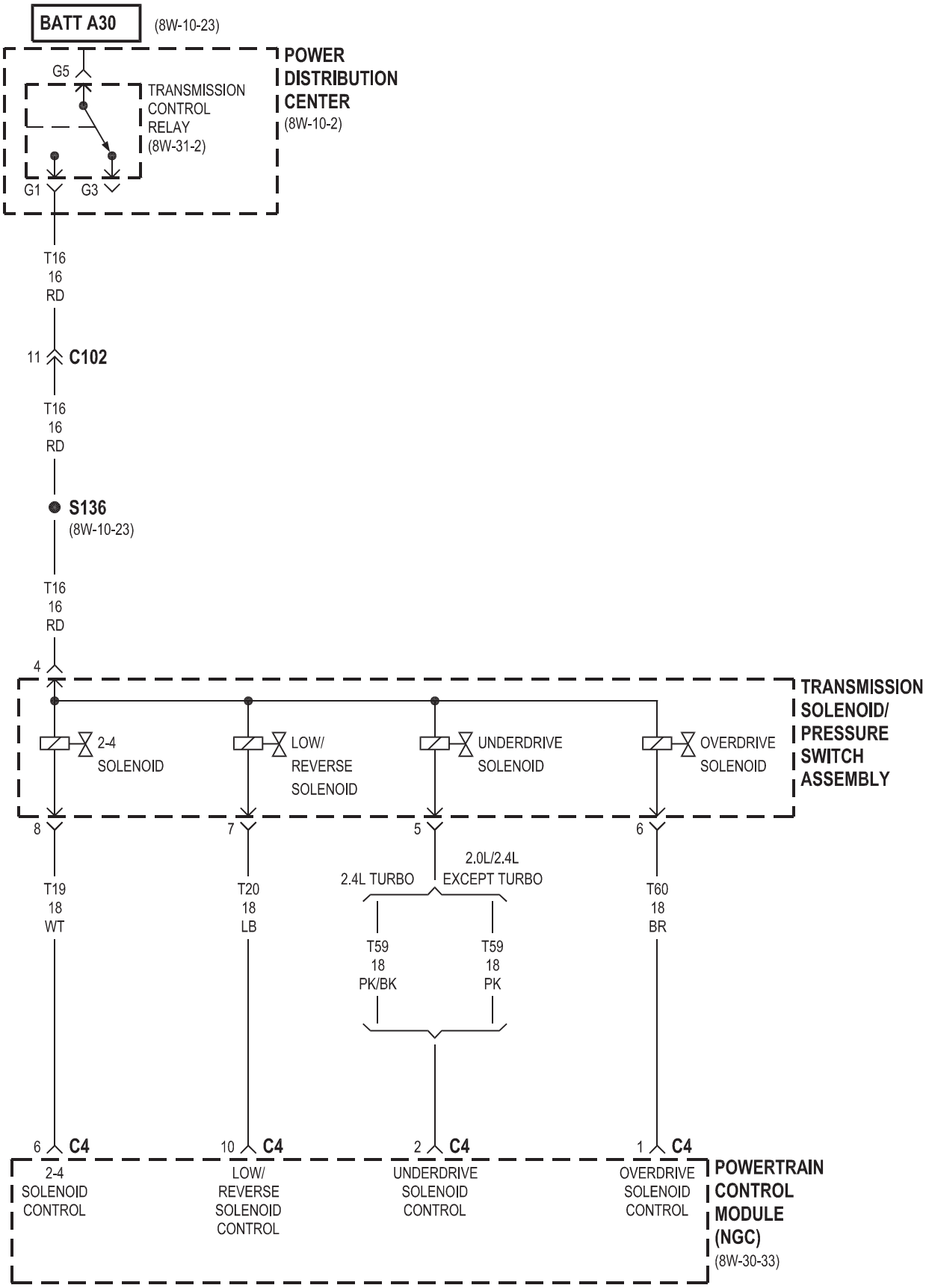
BATT A30
(8W-10-23)
POWER DISTRIBUTION CENTER
(8W-10-2)
G5
TRANSMISSION CONTROL RELAY
(8W-31-2)
G1
G3
T16
16
RD
11
C102
T16
16
RD
S136
(8W-10-23)
T16
16
RD
4
TRANSMISSION SOLENOID/ PRESSURE SWITCH ASSEMBLY
2-4 SOLENOID
LOW/ REVERSE SOLENOID
UNDERDRIVE SOLENOID
OVERDRIVE SOLENOID
8
7
5
6
T19
18
WT
T20
18
LB
2.4L TURBO
2.0L/2.4L EXCEPT TURBO
T59
18
PK/BK
T59
18
PK
T60
18
BR
6 C4
10 C4
2 C4
1 C4
2-4 SOLENOID CONTROL
LOW/ REVERSE SOLENOID CONTROL
UNDERDRIVE SOLENOID CONTROL
OVERDRIVE SOLENOID CONTROL
POWERTRAIN CONTROL MODULE (NGC)
(8W-30-33)

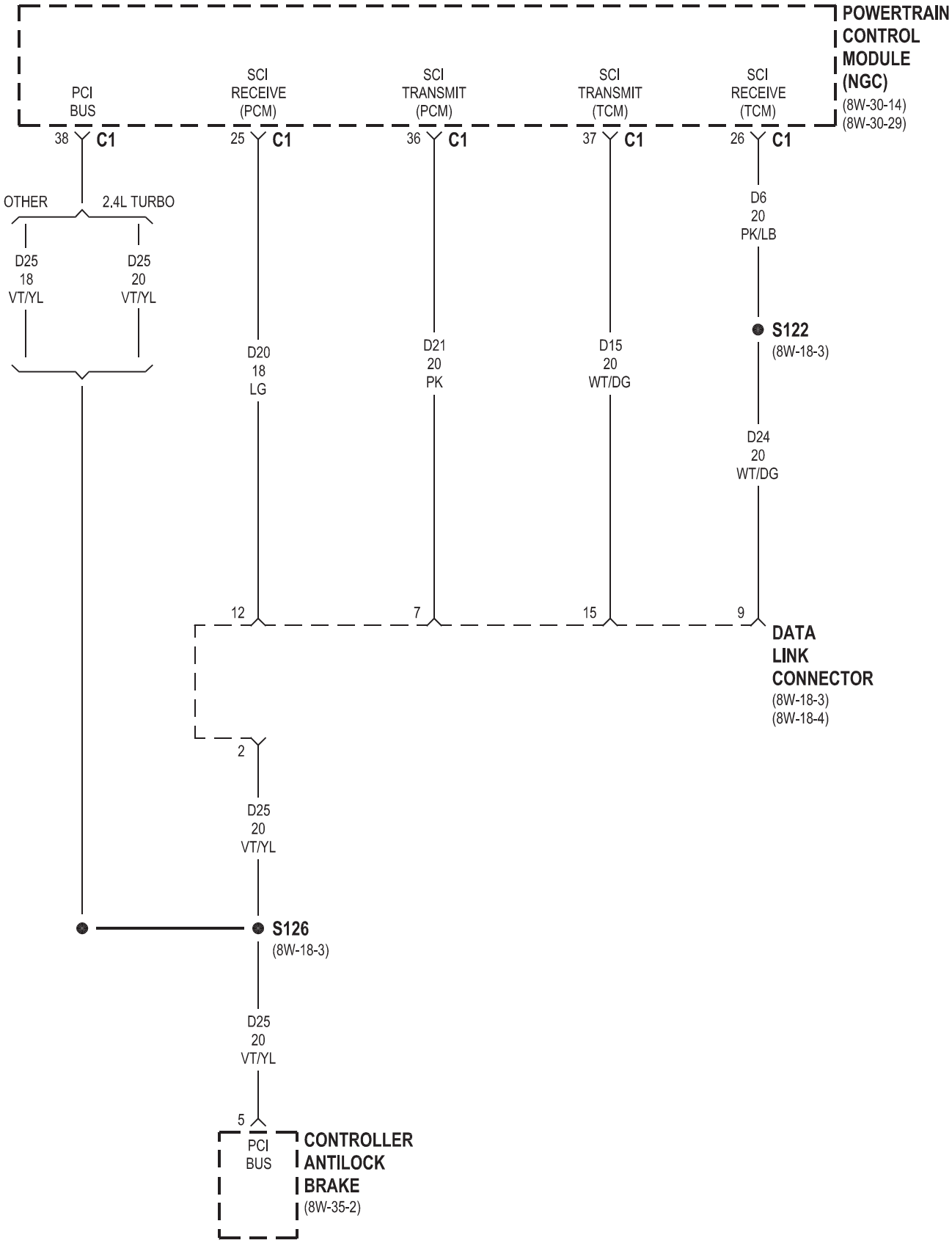
POWERTRAIN CONTROL MODULE (NGC)
(8W-30-14)
(8W-30-29)
PCI BUS
SCI RECEIVE (PCM)
SCI TRANSMIT (PCM)
SCI TRANSMIT (TCM)
SCI RECEIVE (TCM)
38 C1
25 C1
36 C1
37 C1
26 C1
OTHER
2.4L TURBO
D25 18 VT/YL
D25 20 VT/YL
D20 18 LG
D21 20 PK
D15 20 WT/DG
D6 20 PK/LB
S122
(8W-18-3)
D24 20 WT/DG
12
7
15
9
DATA LINK CONNECTOR
(8W-18-3)
(8W-18-4)
2
D25 20 VT/YL
S126
(8W-18-3)
D25 20 VT/YL
5
PCI BUS
CONTROLLER ANTILOCK BRAKE
(8W-35-2)

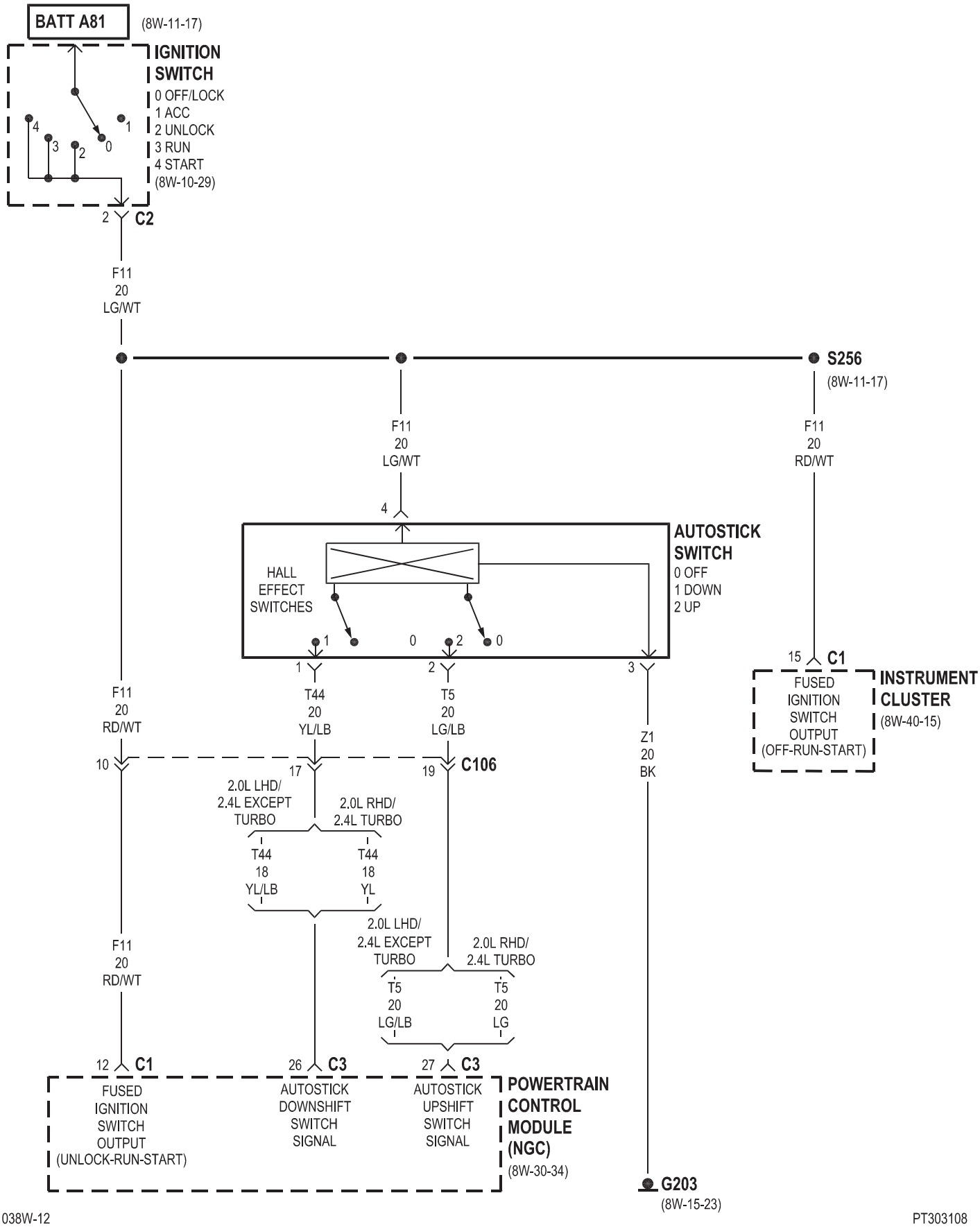
BATT A81
(8W-11-17)
IGNITION SWITCH
0 OFF/LOCK
1 ACC
2 UNLOCK
3 RUN
4 START
(8W-10-29)
2 C2
F11
20
LG/WT
S256
(8W-11-17)
F11
20
LG/WT
F11
20
RD/WT
4
AUTOSTICK SWITCH
0 OFF
1 DOWN
2 UP
HALL EFFECT SWITCHES
1
0
2
0
1
2
3
T44
20
YL/LB
T5
20
LG/LB
15 C1
FUSED IGNITION SWITCH OUTPUT (OFF-RUN-START)
INSTRUMENT CLUSTER
(8W-40-15)
F11
20
RD/WT
10
17
19 C106
Z1
20
BK
2.0L LHD/ 2.4L EXCEPT TURBO
2.0L RHD/ 2.4L TURBO
T44
18
YL/LB
T44
18
YL
2.0L LHD/ 2.4L EXCEPT TURBO
2.0L RHD/ 2.4L TURBO
T5
20
LG/LB
T5
20
LG
F11
20
RD/WT
12 C1
26 C3
27 C3
FUSED IGNITION SWITCH OUTPUT (UNLOCK-RUN-START)
AUTOSTICK DOWNSHIFT SWITCH SIGNAL
AUTOSTICK UPSHIFT SWITCH SIGNAL
POWERTRAIN CONTROL MODULE (NGC)
(8W-30-34)
G203
(8W-15-23)

8W-33 VEHICLE SPEED CONTROL

Component	Page
Brake Lamp Switch	8W-33-4, 5
Clockspring	8W-33-4, 5
Clutch Pedal Position Switch	8W-33-6, 7
Data Link Connector	8W-33-2, 3
Engine Control Module	8W-33-3, 5, 7
Fuse 10	8W-33-2, 3
Fuse 12	8W-33-5
Fuse Block	8W-33-2, 3
G102	8W-33-7
G103	8W-33-5, 7
G104	8W-33-4, 5
Input Speed Sensor	8W-33-6
Instrument Cluster	8W-33-2, 3
Output Speed Sensor	8W-33-6
Power Distribution Center	8W-33-5
Powertrain Control Module	8W-33-2, 4, 6
Speed Control Servo	8W-33-4
Speed Control Switch	8W-33-4, 5
Transmission Range Sensor	8W-33-6
Vehicle Speed Sensor	8W-33-6, 7

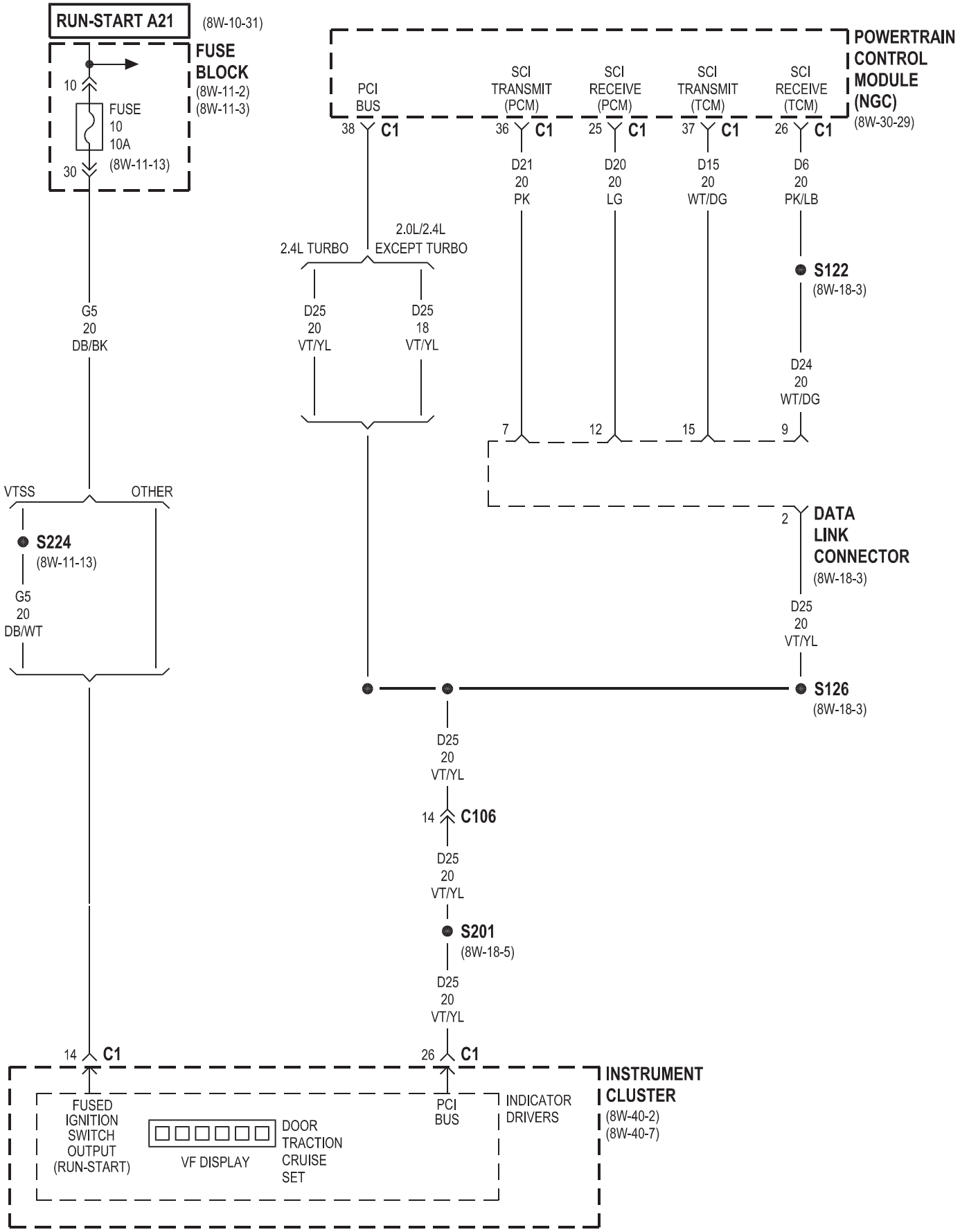
RUN-START A21
(8W-10-31)
FUSE BLOCK
(8W-11-2)
(8W-11-3)
10
FUSE 10 10A
(8W-11-13)
30
G5 20 DB/BK
POWERTRAIN CONTROL MODULE (NGC)
(8W-30-29)
PCI BUS
SCI TRANSMIT (PCM)
SCI RECEIVE (PCM)
SCI TRANSMIT (TCM)
SCI RECEIVE (TCM)
38 C1
36 C1
25 C1
37 C1
26 C1
D21 20 PK
D20 20 LG
D15 20 WT/DG
D6 20 PK/LB
2.4L TURBO
2.0L/2.4L EXCEPT TURBO
D25 20 VT/YL
D25 18 VT/YL
S122
(8W-18-3)
D24 20 WT/DG
7
12
15
9
VTSS
OTHER
S224
(8W-11-13)
G5 20 DB/WT
2
DATA LINK CONNECTOR
(8W-18-3)
D25 20 VT/YL
S126
(8W-18-3)
D25 20 VT/YL
14 C106
D25 20 VT/YL
S201
(8W-18-5)
D25 20 VT/YL
14 C1
26 C1
INSTRUMENT CLUSTER
(8W-40-2)
(8W-40-7)
FUSED IGNITION SWITCH OUTPUT (RUN-START)
VF DISPLAY
DOOR
TRACTION
CRUISE
SET
PCI BUS
INDICATOR DRIVERS

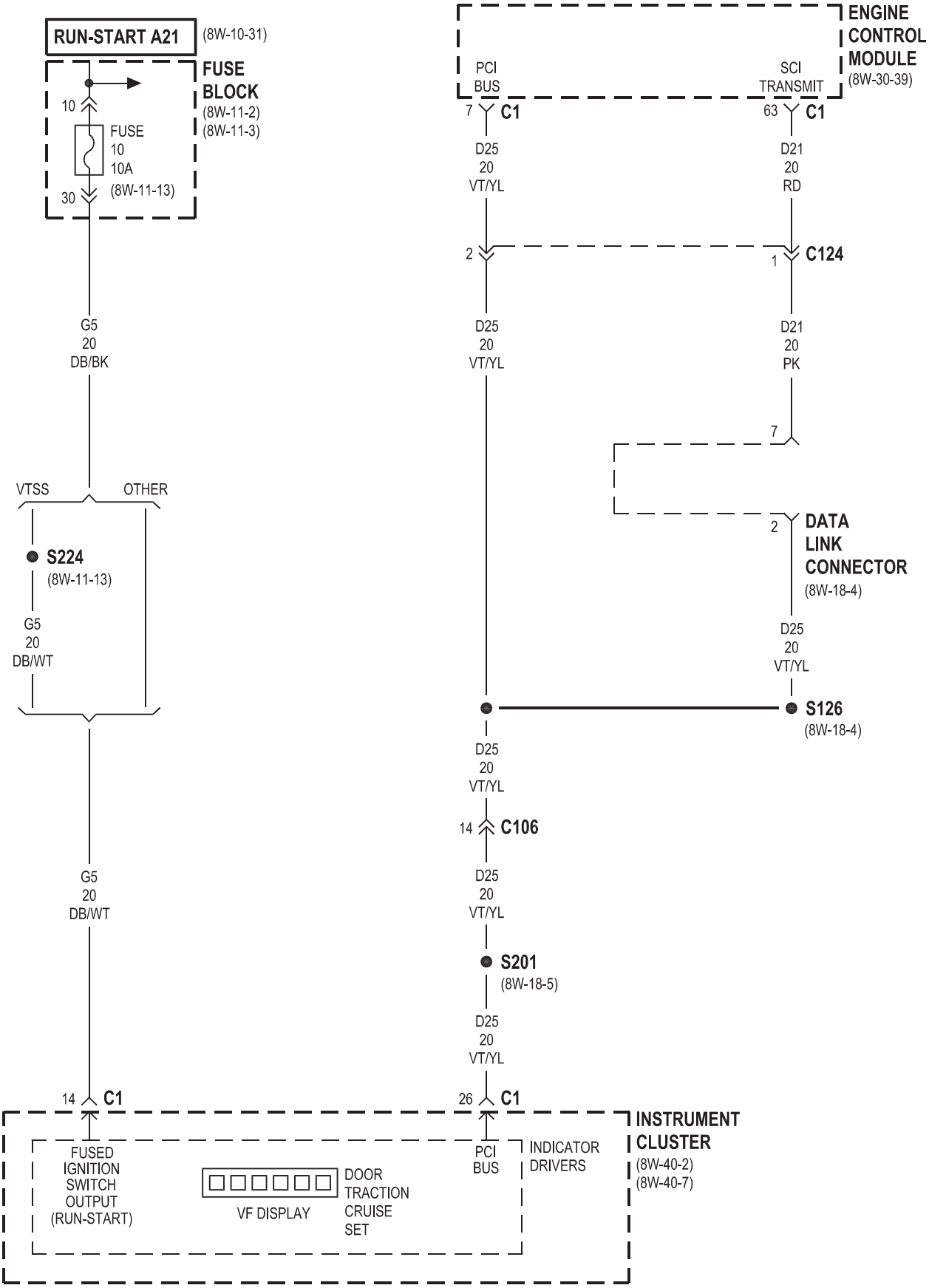
RUN-START A21
(8W-10-31)
FUSE BLOCK
(8W-11-2)
(8W-11-3)
10
FUSE 10 10A
(8W-11-13)
30
G5 20 DB/BK
VTSS
OTHER
S224
(8W-11-13)
G5 20 DB/WT
G5 20 DB/WT
14 C1
ENGINE CONTROL MODULE
(8W-30-39)
PCI BUS
SCI TRANSMIT
7 C1
63 C1
D25 20 VT/YL
D21 20 RD
2
1 C124
D25 20 VT/YL
D21 20 PK
7
2 DATA LINK CONNECTOR
(8W-18-4)
D25 20 VT/YL
S126
(8W-18-4)
D25 20 VT/YL
14 C106
D25 20 VT/YL
S201
(8W-18-5)
D25 20 VT/YL
26 C1
INSTRUMENT CLUSTER
(8W-40-2)
(8W-40-7)
FUSED IGNITION SWITCH OUTPUT (RUN-START)
VF DISPLAY
DOOR
TRACTION
CRUISE
SET
PCI BUS
INDICATOR DRIVERS

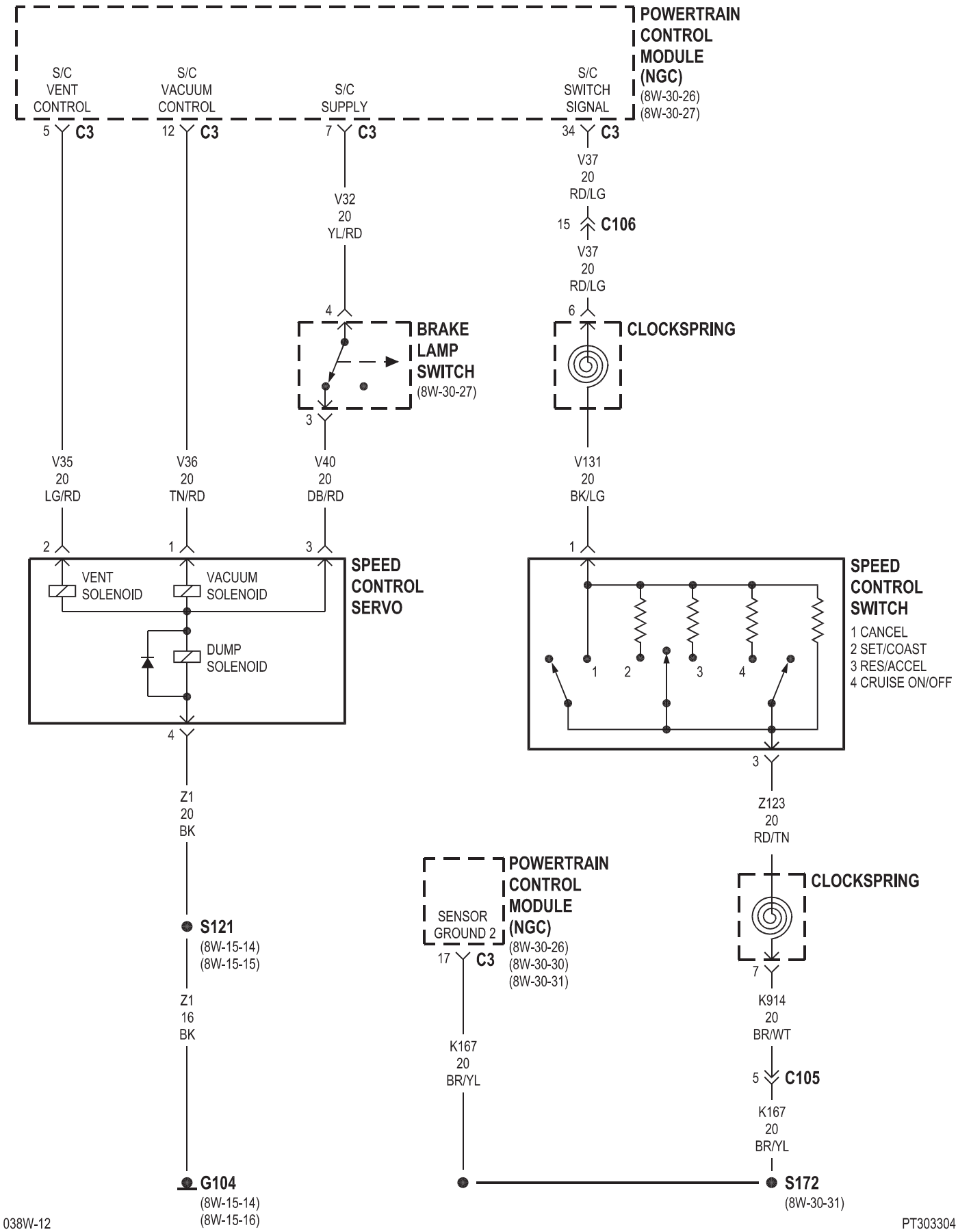
POWERTRAIN CONTROL MODULE (NGC)
(8W-30-26)
(8W-30-27)
S/C VENT CONTROL
S/C VACUUM CONTROL
S/C SUPPLY
S/C SWITCH SIGNAL
5 C3
12 C3
7 C3
34 C3
V37 20 RD/LG
15 C106
V37 20 RD/LG
6
V32 20 YL/RD
4
BRAKE LAMP SWITCH
(8W-30-27)
3
CLOCKSPRING
V35 20 LG/RD
V36 20 TN/RD
V40 20 DB/RD
V131 20 BK/LG
2
1
3
1
SPEED CONTROL SERVO
VENT SOLENOID
VACUUM SOLENOID
DUMP SOLENOID
4
SPEED CONTROL SWITCH
1 CANCEL
2 SET/COAST
3 RES/ACCEL
4 CRUISE ON/OFF
1 2 3 4
3
Z1 20 BK
Z123 20 RD/TN
POWERTRAIN CONTROL MODULE (NGC)
(8W-30-26)
(8W-30-30)
(8W-30-31)
SENSOR GROUND 2
17 C3
CLOCKSPRING
7
S121
(8W-15-14)
(8W-15-15)
Z1 16 BK
K167 20 BR/YL
K914 20 BR/WT
5 C105
K167 20 BR/YL
G104
(8W-15-14)
(8W-15-16)
S172
(8W-30-31)

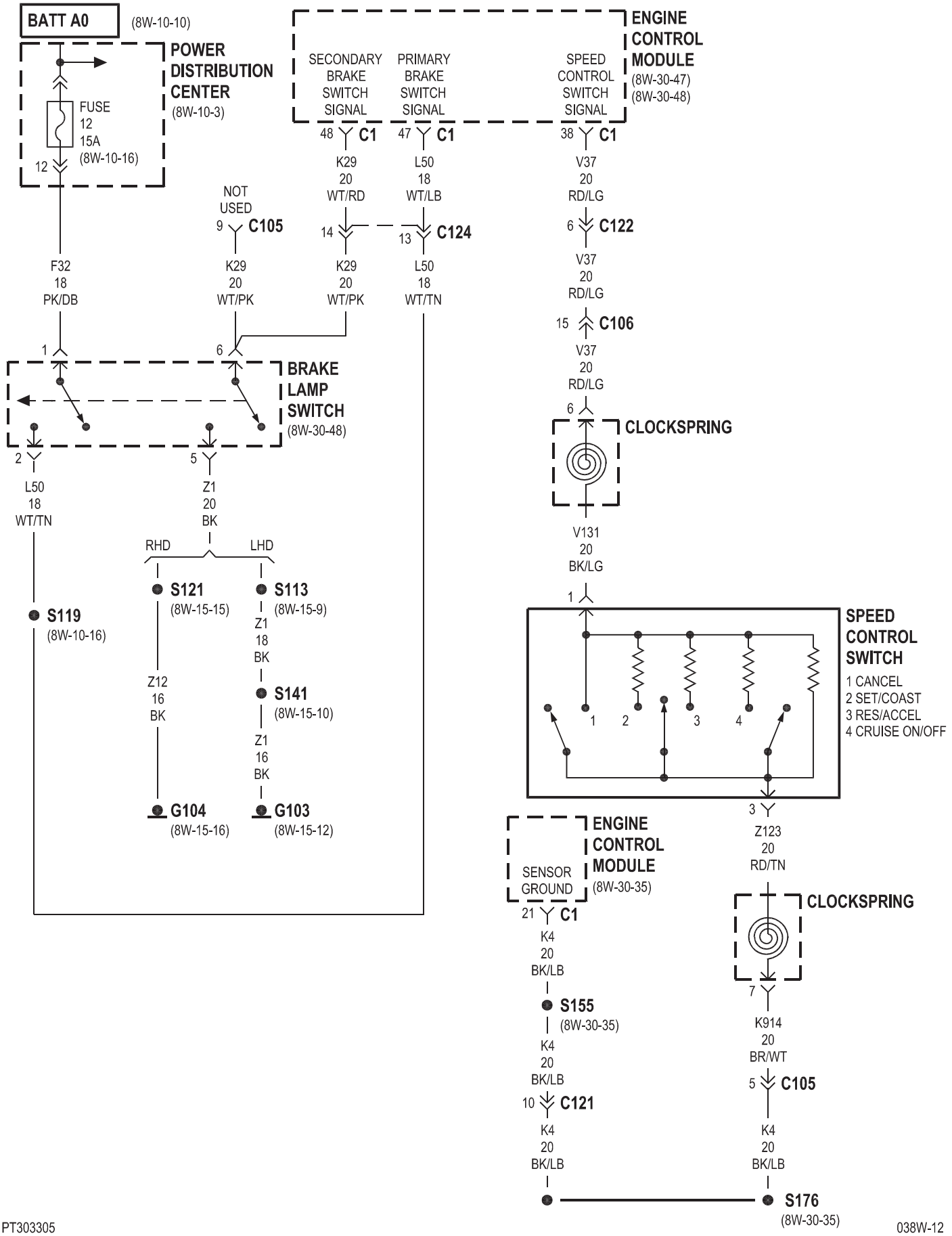
BATT A0
(8W-10-10)
POWER DISTRIBUTION CENTER
(8W-10-3)
FUSE 12 15A
(8W-10-16)
12
F32 18 PK/DB
1
ENGINE CONTROL MODULE
(8W-30-47)
(8W-30-48)
SECONDARY BRAKE SWITCH SIGNAL
PRIMARY BRAKE SWITCH SIGNAL
SPEED CONTROL SWITCH SIGNAL
48 C1
47 C1
38 C1
K29 20 WT/RD
L50 18 WT/LB
V37 20 RD/LG
NOT USED
9 C105
14
13 C124
6 C122
K29 20 WT/PK
K29 20 WT/PK
L50 18 WT/TN
V37 20 RD/LG
15 C106
V37 20 RD/LG
6
CLOCKSPRING
6
BRAKE LAMP SWITCH
(8W-30-48)
2
5
L50 18 WT/TN
Z1 20 BK
V131 20 BK/LG
RHD
LHD
S121
(8W-15-15)
S113
(8W-15-9)
S119
(8W-10-16)
Z1 18 BK
Z12 16 BK
S141
(8W-15-10)
Z1 16 BK
G104
(8W-15-16)
G103
(8W-15-12)
1
SPEED CONTROL SWITCH
1 CANCEL
2 SET/COAST
3 RES/ACCEL
4 CRUISE ON/OFF
1 2 3 4
3
Z123 20 RD/TN
ENGINE CONTROL MODULE
(8W-30-35)
SENSOR GROUND
21 C1
K4 20 BK/LB
S155
(8W-30-35)
K4 20 BK/LB
10 C121
K4 20 BK/LB
CLOCKSPRING
7
K914 20 BR/WT
5 C105
K4 20 BK/LB
S176
(8W-30-35)

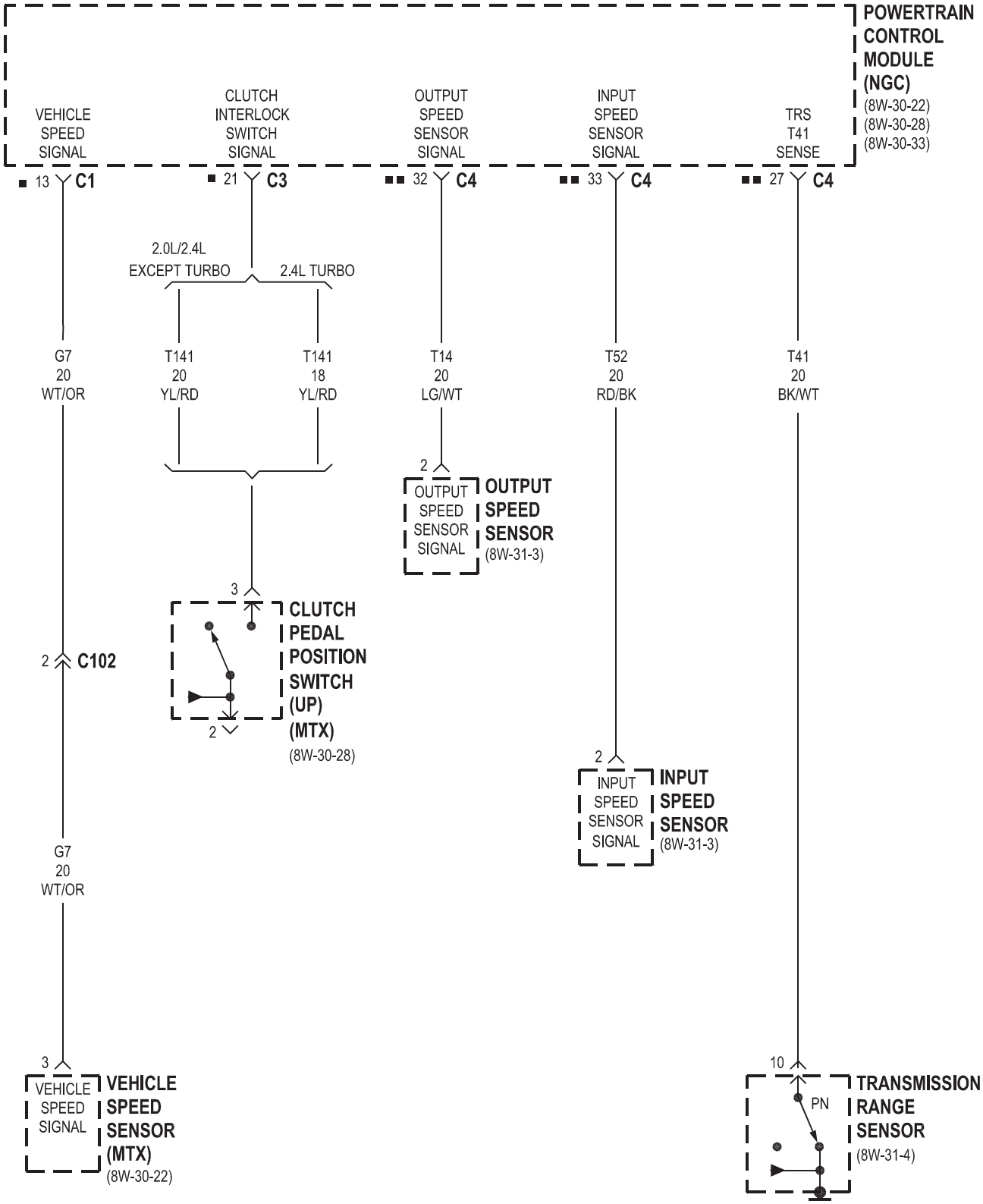
POWERTRAIN CONTROL MODULE (NGC)
(8W-30-22)
(8W-30-28)
(8W-30-33)
VEHICLE SPEED SIGNAL
CLUTCH INTERLOCK SWITCH SIGNAL
OUTPUT SPEED SENSOR SIGNAL
INPUT SPEED SENSOR SIGNAL
TRS T41 SENSE
13 C1
21 C3
32 C4
33 C4
27 C4
2.0L/2.4L EXCEPT TURBO
2.4L TURBO
G7 20 WT/OR
T141 20 YL/RD
T141 18 YL/RD
T14 20 LG/WT
T52 20 RD/BK
T41 20 BK/WT
2
OUTPUT SPEED SENSOR SIGNAL
OUTPUT SPEED SENSOR
(8W-31-3)
3
CLUTCH PEDAL POSITION SWITCH (UP) (MTX)
(8W-30-28)
2 C102
2
INPUT SPEED SENSOR SIGNAL
INPUT SPEED SENSOR
(8W-31-3)
G7 20 WT/OR
3
VEHICLE SPEED SIGNAL
VEHICLE SPEED SENSOR (MTX)
(8W-30-22)
10
PN
TRANSMISSION RANGE SENSOR
(8W-31-4)

■ MTX
■■ EATX

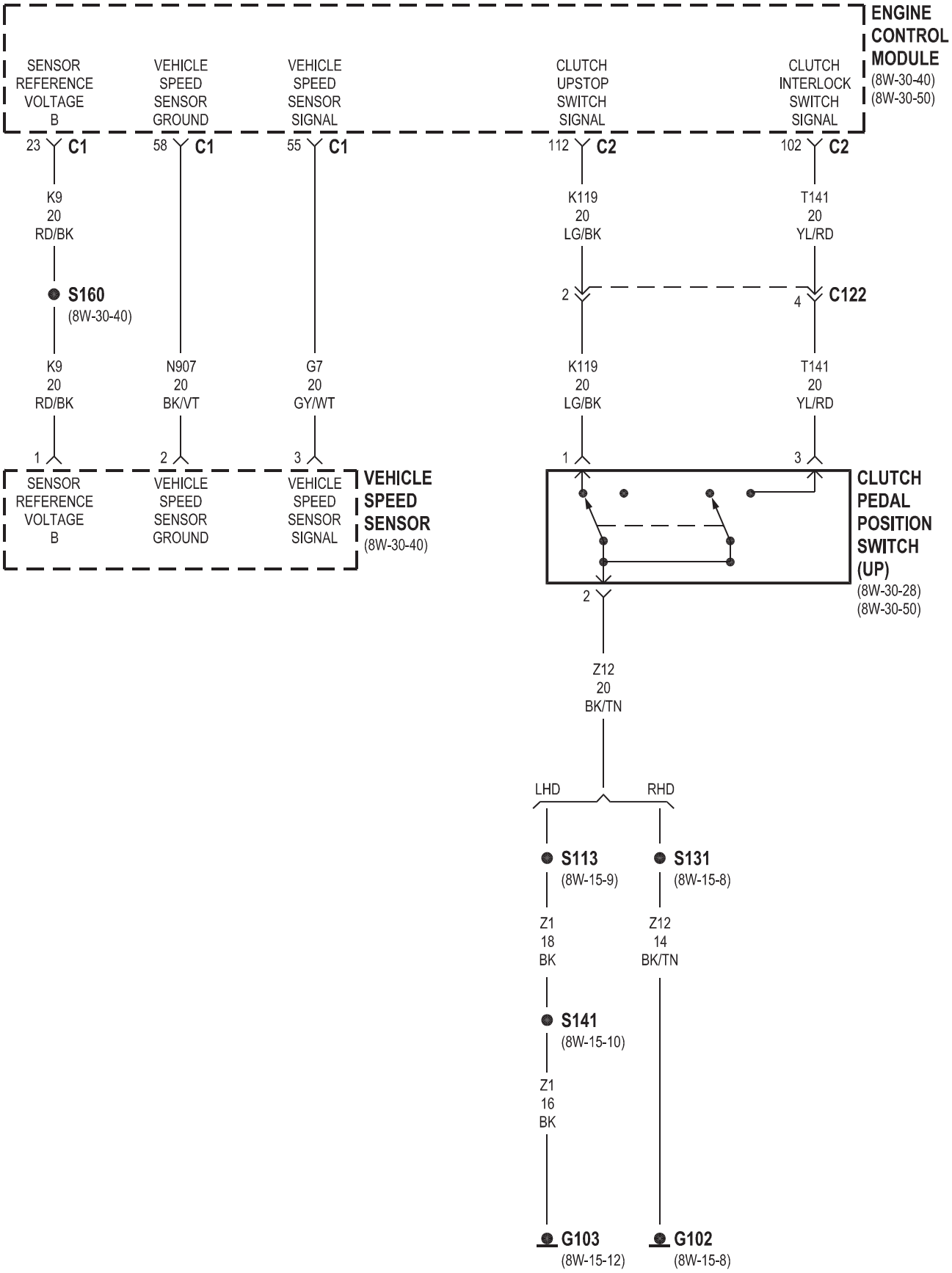
ENGINE CONTROL MODULE
(8W-30-40)
(8W-30-50)
SENSOR REFERENCE VOLTAGE B
VEHICLE SPEED SENSOR GROUND
VEHICLE SPEED SENSOR SIGNAL
CLUTCH UPSTOP SWITCH SIGNAL
CLUTCH INTERLOCK SWITCH SIGNAL
23 C1
58 C1
55 C1
112 C2
102 C2
K9 20 RD/BK
S160
(8W-30-40)
K9 20 RD/BK
N907 20 BK/VT
G7 20 GY/WT
K119 20 LG/BK
T141 20 YL/RD
2
4
C122
K119 20 LG/BK
T141 20 YL/RD
1
2
3
1
3
SENSOR REFERENCE VOLTAGE B
VEHICLE SPEED SENSOR GROUND
VEHICLE SPEED SENSOR SIGNAL
VEHICLE SPEED SENSOR
(8W-30-40)
CLUTCH PEDAL POSITION SWITCH (UP)
(8W-30-28)
(8W-30-50)
2
Z12 20 BK/TN
LHD
RHD
S113
(8W-15-9)
S131
(8W-15-8)
Z1 18 BK
Z12 14 BK/TN
S141
(8W-15-10)
Z1 16 BK
G103
(8W-15-12)
G102
(8W-15-8)

8W-35 ANTILOCK BRAKES

Component	Page
Brake Lamp Switch	8W-35-2
Controller Antilock Brake	8W-35-2, 3, 4
Data Link Connector	8W-35-2
Fuse 2	8W-35-2
Fuse 7	8W-35-2
Fuse 11	8W-35-3
Fuse 12	8W-35-2
Fuse Block	8W-35-3
G103	8W-35-2
G201	8W-35-3
Instrument Cluster	8W-35-3
Left Front Wheel Speed Sensor	8W-35-4
Left Rear Wheel Speed Sensor	8W-35-4
Power Distribution Center	8W-35-2
Right Front Wheel Speed Sensor	8W-35-4
Right Rear Wheel Speed Sensor	8W-35-4
Traction Control Switch	8W-35-3

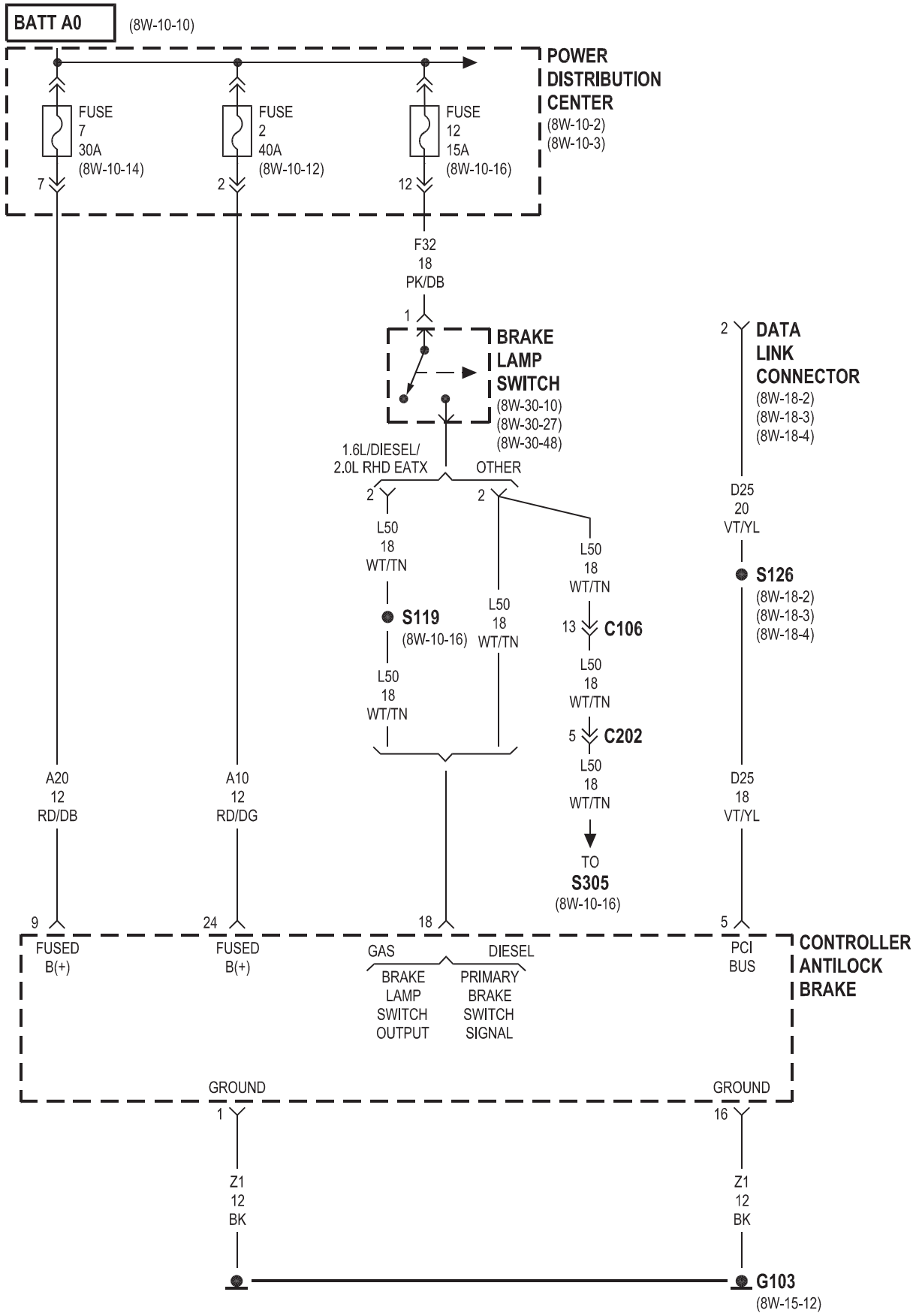
BATT A0
(8W-10-10)
POWER DISTRIBUTION CENTER
(8W-10-2)
(8W-10-3)
FUSE 7 30A (8W-10-14)
FUSE 2 40A (8W-10-12)
FUSE 12 15A (8W-10-16)
7
2
12
F32 18 PK/DB
1
BRAKE LAMP SWITCH
(8W-30-10)
(8W-30-27)
(8W-30-48)
2
DATA LINK CONNECTOR
(8W-18-2)
(8W-18-3)
(8W-18-4)
1.6L/DIESEL/ 2.0L RHD EATX
OTHER
2
2
L50 18 WT/TN
S119
(8W-10-16)
L50 18 WT/TN
L50 18 WT/TN
L50 18 WT/TN
13
C106
L50 18 WT/TN
5
C202
L50 18 WT/TN
TO
S305
(8W-10-16)
D25 20 VT/YL
S126
(8W-18-2)
(8W-18-3)
(8W-18-4)
A20 12 RD/DB
A10 12 RD/DG
D25 18 VT/YL
9
24
18
5
FUSED B(+)
FUSED B(+)
GAS
DIESEL
BRAKE LAMP SWITCH OUTPUT
PRIMARY BRAKE SWITCH SIGNAL
PCI BUS
CONTROLLER ANTILOCK BRAKE
GROUND
GROUND
1
16
Z1 12 BK
Z1 12 BK
G103
(8W-15-12)

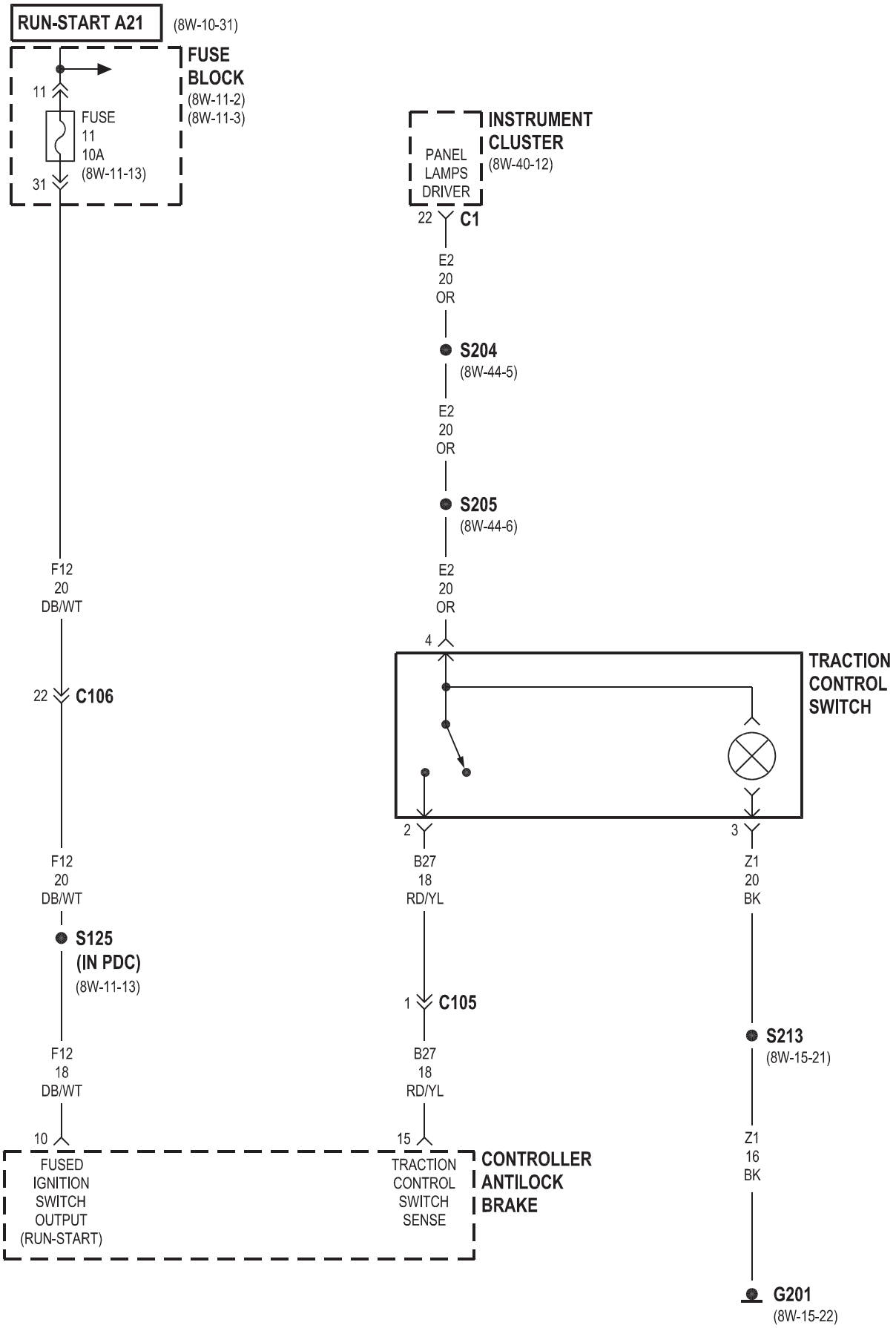
RUN-START A21
(8W-10-31)
FUSE BLOCK
(8W-11-2)
(8W-11-3)
11
FUSE 11 10A
(8W-11-13)
31
INSTRUMENT CLUSTER
(8W-40-12)
PANEL LAMPS DRIVER
22
C1
E2 20 OR
S204
(8W-44-5)
E2 20 OR
S205
(8W-44-6)
E2 20 OR
4
TRACTION CONTROL SWITCH
2
3
B27 18 RD/YL
Z1 20 BK
F12 20 DB/WT
22
C106
F12 20 DB/WT
S125 (IN PDC)
(8W-11-13)
1
C105
B27 18 RD/YL
S213
(8W-15-21)
F12 18 DB/WT
Z1 16 BK
10
15
FUSED IGNITION SWITCH OUTPUT (RUN-START)
TRACTION CONTROL SWITCH SENSE
CONTROLLER ANTILOCK BRAKE
G201
(8W-15-22)

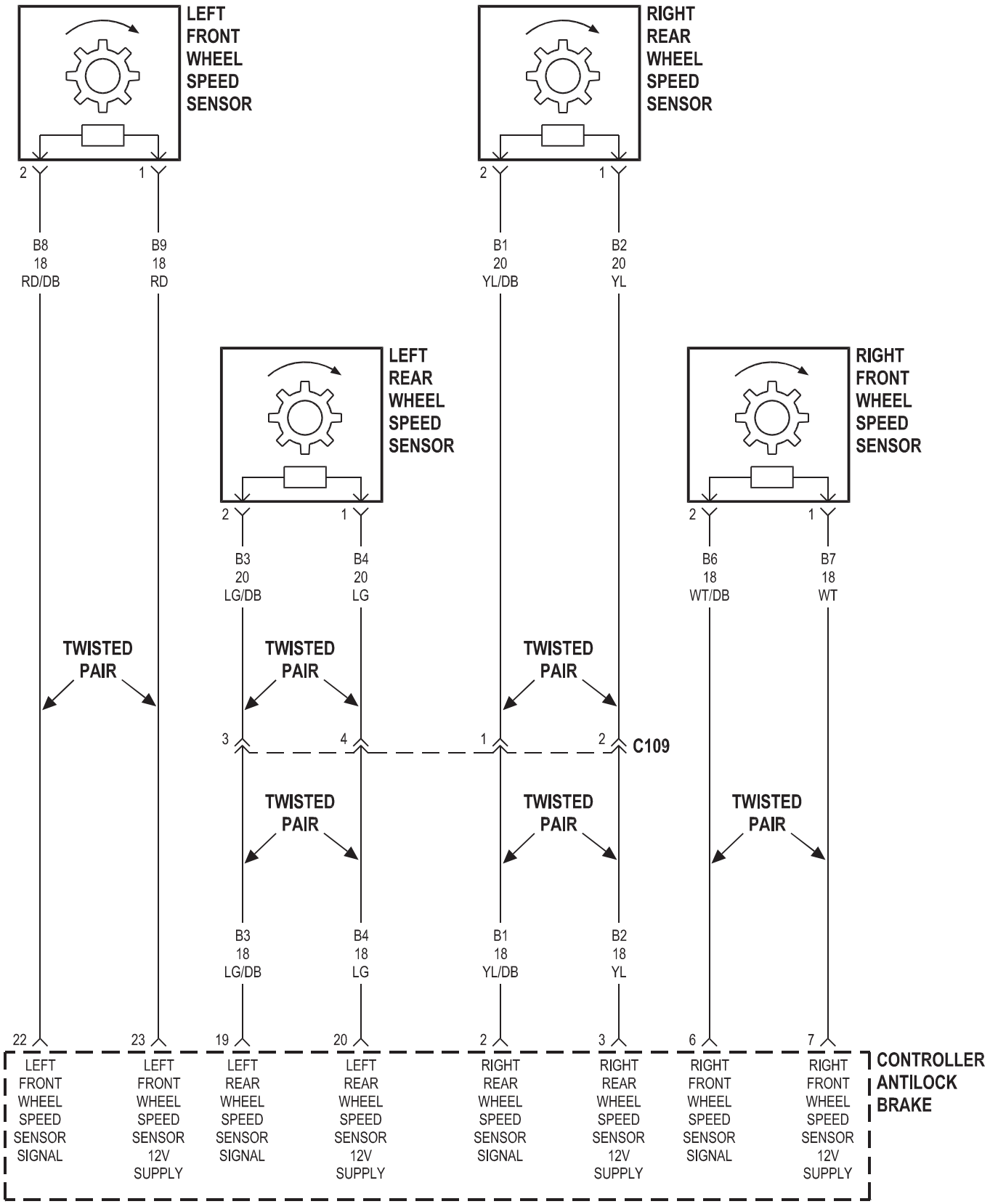
LEFT FRONT WHEEL SPEED SENSOR
RIGHT REAR WHEEL SPEED SENSOR
LEFT REAR WHEEL SPEED SENSOR
RIGHT FRONT WHEEL SPEED SENSOR
2
1
B8 18 RD/DB
B9 18 RD
B1 20 YL/DB
B2 20 YL
B3 20 LG/DB
B4 20 LG
B6 18 WT/DB
B7 18 WT
TWISTED PAIR
3
4
1
2
C109
B3 18 LG/DB
B4 18 LG
B1 18 YL/DB
B2 18 YL
22
23
19
20
2
3
6
7
LEFT FRONT WHEEL SPEED SENSOR SIGNAL
LEFT FRONT WHEEL SPEED SENSOR 12V SUPPLY
LEFT REAR WHEEL SPEED SENSOR SIGNAL
LEFT REAR WHEEL SPEED SENSOR 12V SUPPLY
RIGHT REAR WHEEL SPEED SENSOR SIGNAL
RIGHT REAR WHEEL SPEED SENSOR 12V SUPPLY
RIGHT FRONT WHEEL SPEED SENSOR SIGNAL
RIGHT FRONT WHEEL SPEED SENSOR 12V SUPPLY
CONTROLLER ANTILOCK BRAKE

8W-39 VEHICLE THEFT SECURITY SYSTEM

Component	Page
Clockspring	8W-39-12
Data Link Connector	8W-39-3, 12
Dome Lamp/Intrusion Sensor	8W-39-14
Driver Door Power Lock Motor/Ajar Switch	8W-39-4, 5, 7, 8
Fuse 3	8W-39-2
Fuse 10	8W-39-2, 3
Fuse 13	8W-39-2, 3
Fuse 14	8W-39-12
Fuse 18	8W-39-14
Fuse 19	8W-39-13
Fuse 20	8W-39-13
Fuse Block	8W-39-2, 3, 13
G103	8W-39-6, 11, 14
G104	8W-39-11, 12
G200	8W-39-2, 3, 14
G201	8W-39-2
G300	8W-39-6
Headlamp Switch	8W-39-10
High Note Horn	8W-39-12
Hood Ajar Switch	8W-39-6
Horn Relay	8W-39-12
Instrument Cluster	8W-39-4, 5, 6, 10, 13
Left City Lamp	8W-39-11
Left Cylinder Lock Switch	8W-39-7, 8
Left Door Lock Switch	8W-39-7, 10
Left Front Park/Turn Signal Lamp	8W-39-11
Left Headlamp Leveling Module	8W-39-13
Left Low Beam Headlamp	8W-39-13
Left Rear Door Ajar Switch	8W-39-4, 5
Left Rear Door Power Lock Motor	8W-39-9
Left Rear Turn Signal Lamp	8W-39-13
Liftgate Ajar Switch	8W-39-6
Liftgate Cylinder Lock Switch	8W-39-7, 8
Liftgate Power Lock Motor	8W-39-9
Low Note Horn	8W-39-12
Multi-Function Switch	8W-39-11, 13
Overhead Console Module	8W-39-14
Passenger Door Power Lock Motor/Ajar Switch	8W-39-4, 5, 9
Power Distribution Center	8W-39-12, 14
Remote Keyless Entry Antenna	8W-39-14
Remote Keyless Entry Module	8W-39-2, 4, 5, 6, 7, 8, 9, 10, 11, 12, 13, 14
Right City Lamp	8W-39-11
Right Cylinder Lock Switch	8W-39-7, 8
Right Door Lock Switch	8W-39-7, 8, 10
Right Front Park/Turn Signal Lamp	8W-39-11
Right Headlamp Leveling Module	8W-39-13
Right Low Beam Headlamp	8W-39-13
Right Rear Door Ajar Switch	8W-39-4, 5
Right Rear Door Power Lock Motor	8W-39-9
Right Rear Turn Signal Lamp	8W-39-11
Sentry Key Immobilizer Module	8W-39-3
Siren	8W-39-14

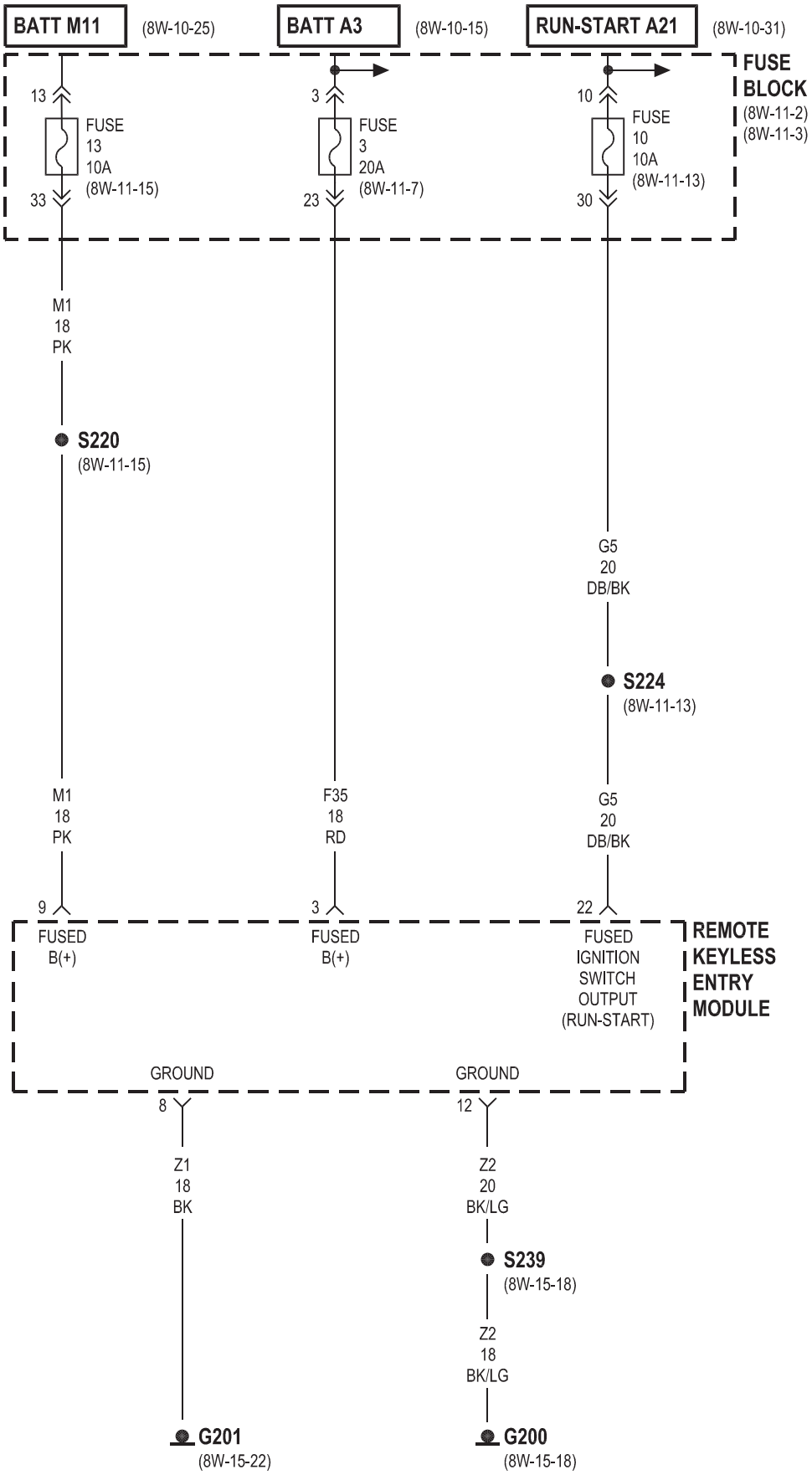
BATT M11
(8W-10-25)
BATT A3
(8W-10-15)
RUN-START A21
(8W-10-31)
FUSE BLOCK
(8W-11-2)
(8W-11-3)
13
FUSE 13 10A (8W-11-15)
33
3
FUSE 3 20A (8W-11-7)
23
10
FUSE 10 10A (8W-11-13)
30
M1 18 PK
S220
(8W-11-15)
G5 20 DB/BK
S224
(8W-11-13)
M1 18 PK
F35 18 RD
G5 20 DB/BK
9
FUSED B(+)
3
FUSED B(+)
22
FUSED IGNITION SWITCH OUTPUT (RUN-START)
REMOTE KEYLESS ENTRY MODULE
GROUND
8
GROUND
12
Z1 18 BK
Z2 20 BK/LG
S239
(8W-15-18)
Z2 18 BK/LG
G201
(8W-15-22)
G200
(8W-15-18)

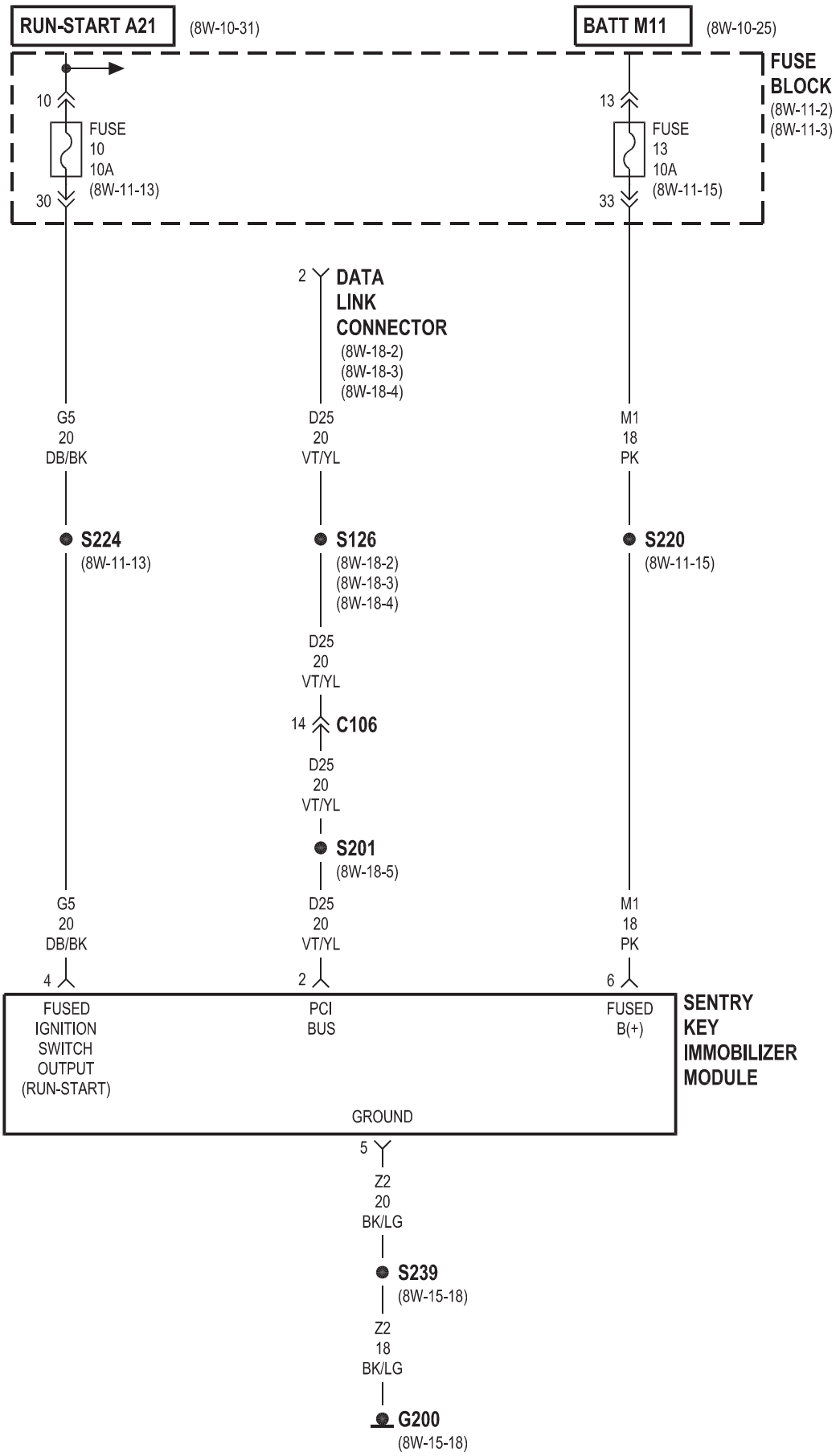
RUN-START A21
(8W-10-31)
BATT M11
(8W-10-25)
FUSE BLOCK
(8W-11-2)
(8W-11-3)
10
FUSE 10 10A
(8W-11-13)
30
13
FUSE 13 10A
(8W-11-15)
33
2
DATA LINK CONNECTOR
(8W-18-2)
(8W-18-3)
(8W-18-4)
G5 20 DB/BK
D25 20 VT/YL
M1 18 PK
S224
(8W-11-13)
S126
(8W-18-2)
(8W-18-3)
(8W-18-4)
S220
(8W-11-15)
D25 20 VT/YL
14
C106
D25 20 VT/YL
S201
(8W-18-5)
G5 20 DB/BK
D25 20 VT/YL
M1 18 PK
4
2
6
FUSED IGNITION SWITCH OUTPUT (RUN-START)
PCI BUS
FUSED B(+)
SENTRY KEY IMMOBILIZER MODULE
GROUND
5
Z2 20 BK/LG
S239
(8W-15-18)
Z2 18 BK/LG
G200
(8W-15-18)

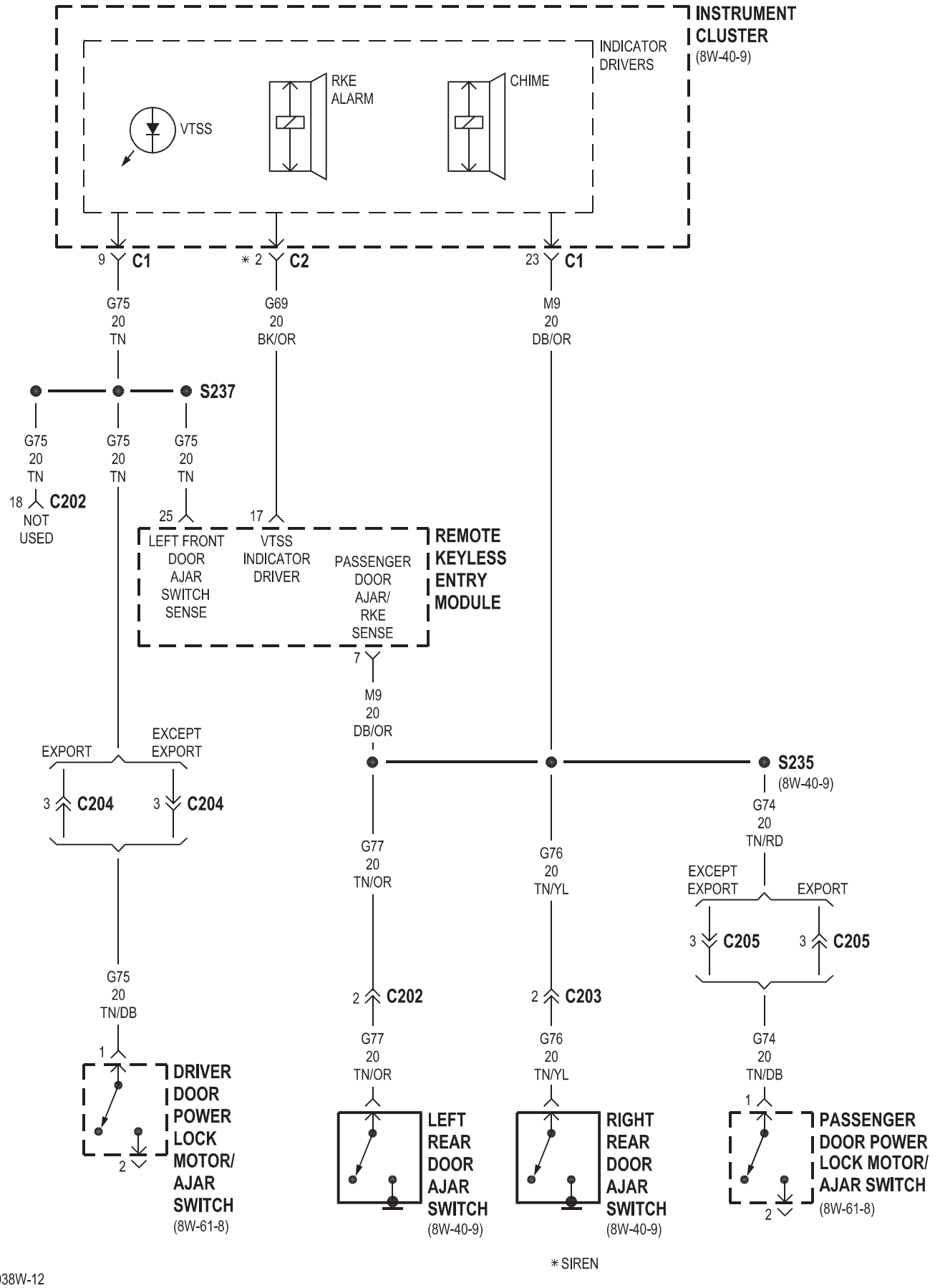
INSTRUMENT CLUSTER
(8W-40-9)
INDICATOR DRIVERS
VTSS
RKE ALARM
CHIME
9 C1
* 2 C2
23 C1
G75 20 TN
G69 20 BK/OR
M9 20 DB/OR
S237
G75 20 TN
G75 20 TN
G75 20 TN
18 C202
NOT USED
25
17
LEFT FRONT DOOR AJAR SWITCH SENSE
VTSS INDICATOR DRIVER
PASSENGER DOOR AJAR/ RKE SENSE
REMOTE KEYLESS ENTRY MODULE
7
M9 20 DB/OR
EXPORT
EXCEPT EXPORT
3 C204
3 C204
S235
(8W-40-9)
G74 20 TN/RD
G77 20 TN/OR
G76 20 TN/YL
EXCEPT EXPORT
EXPORT
3 C205
3 C205
G75 20 TN/DB
2 C202
2 C203
G77 20 TN/OR
G76 20 TN/YL
G74 20 TN/DB
1
DRIVER DOOR POWER LOCK MOTOR/ AJAR SWITCH
(8W-61-8)
LEFT REAR DOOR AJAR SWITCH
(8W-40-9)
RIGHT REAR DOOR AJAR SWITCH
(8W-40-9)
PASSENGER DOOR POWER LOCK MOTOR/ AJAR SWITCH
(8W-61-8)
* SIREN

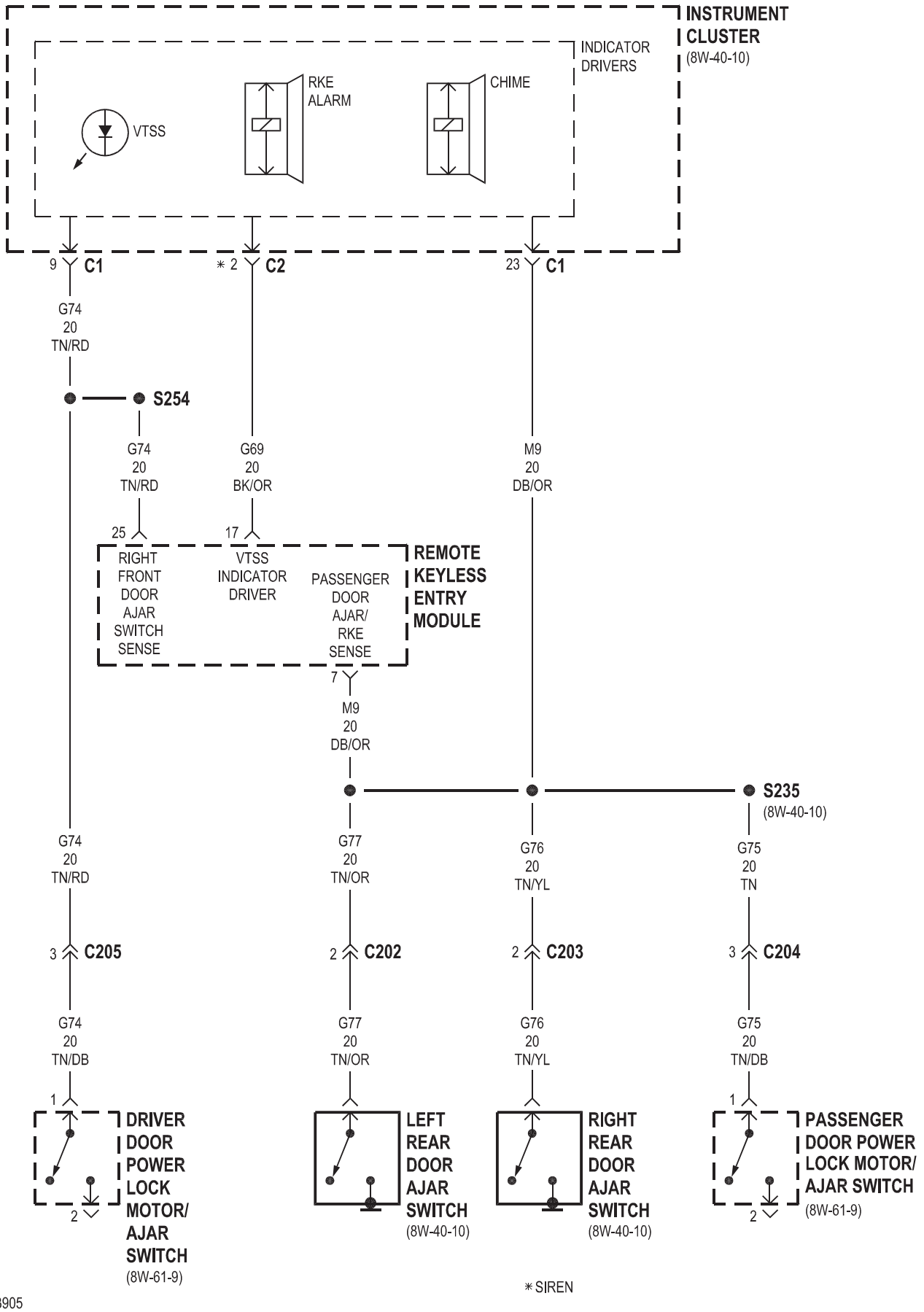
INSTRUMENT CLUSTER
(8W-40-10)
INDICATOR DRIVERS
VTSS
RKE ALARM
CHIME
9 C1
* 2 C2
23 C1
G74 20 TN/RD
S254
G74 20 TN/RD
G69 20 BK/OR
M9 20 DB/OR
25
17
RIGHT FRONT DOOR AJAR SWITCH SENSE
VTSS INDICATOR DRIVER
PASSENGER DOOR AJAR/ RKE SENSE
REMOTE KEYLESS ENTRY MODULE
7
M9 20 DB/OR
S235
(8W-40-10)
G74 20 TN/RD
G77 20 TN/OR
G76 20 TN/YL
G75 20 TN
3 C205
2 C202
2 C203
3 C204
G74 20 TN/DB
G77 20 TN/OR
G76 20 TN/YL
G75 20 TN/DB
1
2
DRIVER DOOR POWER LOCK MOTOR/ AJAR SWITCH
(8W-61-9)
LEFT REAR DOOR AJAR SWITCH
(8W-40-10)
RIGHT REAR DOOR AJAR SWITCH
(8W-40-10)
PASSENGER DOOR POWER LOCK MOTOR/ AJAR SWITCH
(8W-61-9)
* SIREN

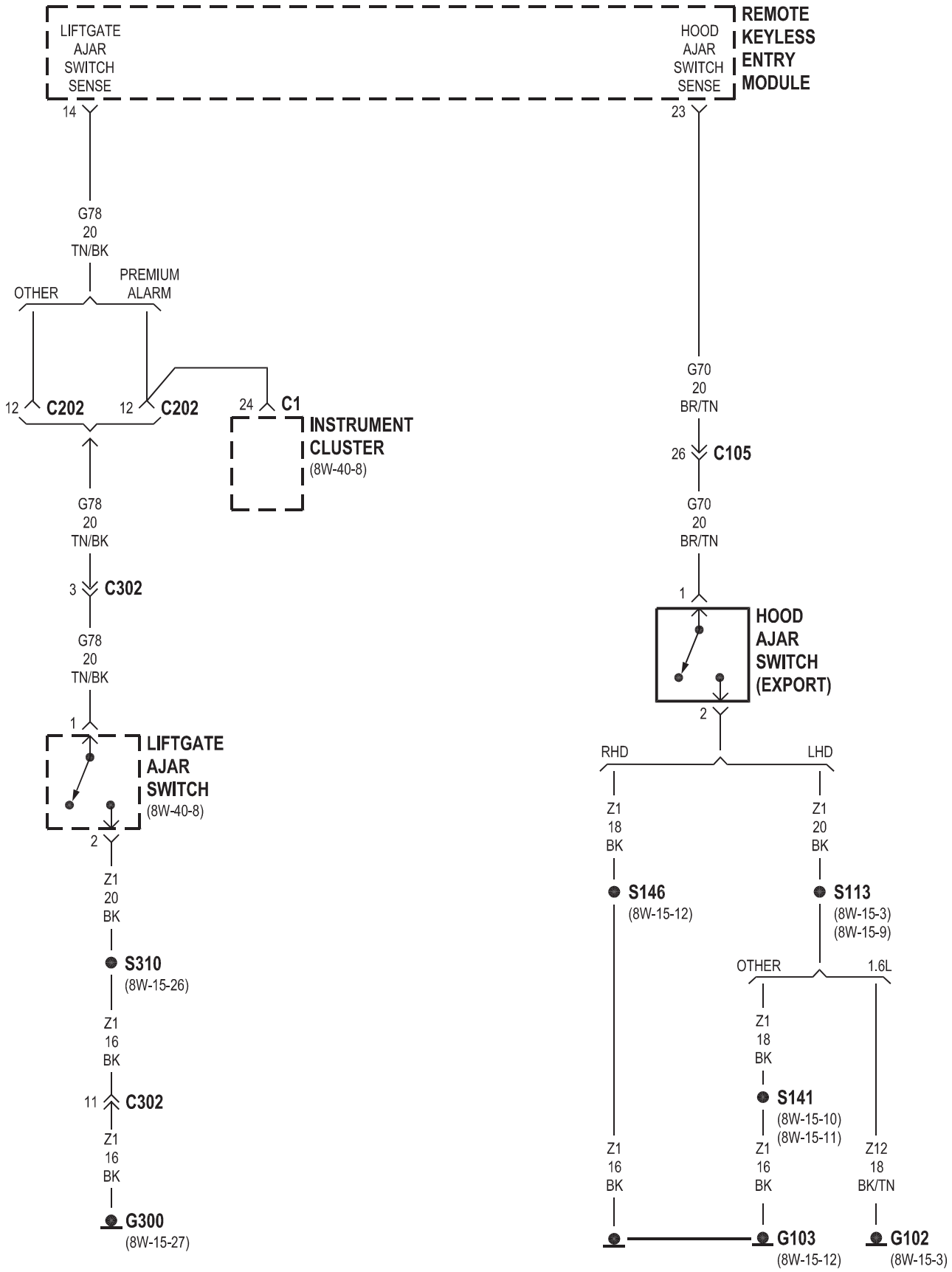
REMOTE KEYLESS ENTRY MODULE
LIFTGATE AJAR SWITCH SENSE
HOOD AJAR SWITCH SENSE
14
23
G78 20 TN/BK
OTHER
PREMIUM ALARM
12 C202
12 C202
24 C1
INSTRUMENT CLUSTER
(8W-40-8)
G78 20 TN/BK
3 C302
G78 20 TN/BK
1
LIFTGATE AJAR SWITCH
(8W-40-8)
2
Z1 20 BK
S310
(8W-15-26)
Z1 16 BK
11 C302
Z1 16 BK
G300
(8W-15-27)
G70 20 BR/TN
26 C105
G70 20 BR/TN
1
HOOD AJAR SWITCH (EXPORT)
2
RHD
LHD
Z1 18 BK
Z1 20 BK
S146
(8W-15-12)
S113
(8W-15-3)
(8W-15-9)
OTHER
1.6L
Z1 18 BK
S141
(8W-15-10)
(8W-15-11)
Z1 16 BK
Z1 16 BK
Z12 18 BK/TN
G103
(8W-15-12)
G102
(8W-15-3)

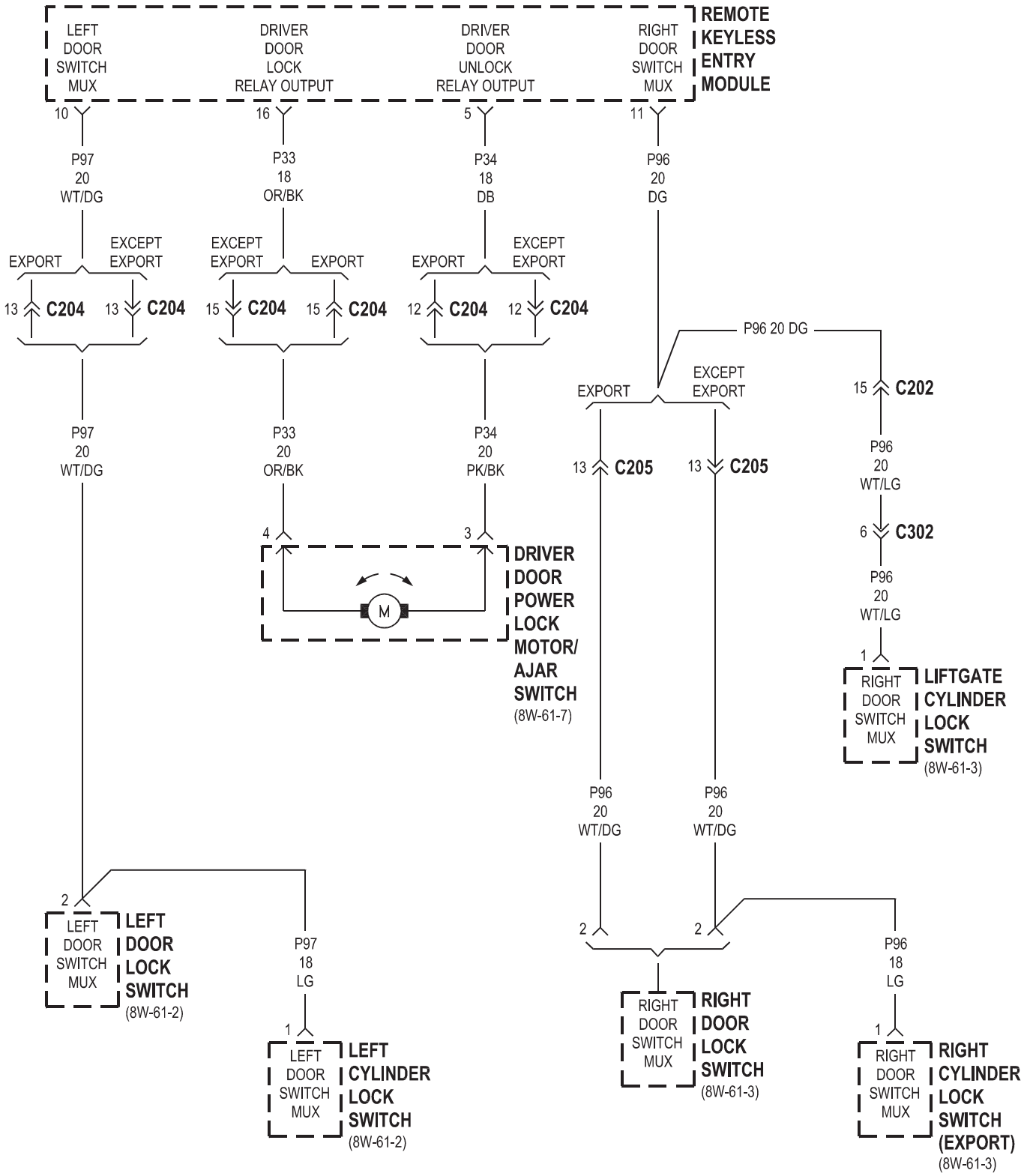
REMOTE KEYLESS ENTRY MODULE
LEFT DOOR SWITCH MUX
DRIVER DOOR LOCK RELAY OUTPUT
DRIVER DOOR UNLOCK RELAY OUTPUT
RIGHT DOOR SWITCH MUX
10
16
5
11
P97 20 WT/DG
P33 18 OR/BK
P34 18 DB
P96 20 DG
EXPORT
EXCEPT EXPORT
13 C204
15 C204
12 C204
P96 20 DG
15 C202
P97 20 WT/DG
P33 20 OR/BK
P34 20 PK/BK
13 C205
P96 20 WT/LG
6 C302
4
3
M
DRIVER DOOR POWER LOCK MOTOR/ AJAR SWITCH
(8W-61-7)
1
RIGHT DOOR SWITCH MUX
LIFTGATE CYLINDER LOCK SWITCH
(8W-61-3)
P96 20 WT/DG
2
LEFT DOOR SWITCH MUX
LEFT DOOR LOCK SWITCH
(8W-61-2)
P97 18 LG
LEFT CYLINDER LOCK SWITCH
(8W-61-2)
RIGHT DOOR LOCK SWITCH
(8W-61-3)
P96 18 LG
RIGHT CYLINDER LOCK SWITCH (EXPORT)
(8W-61-3)

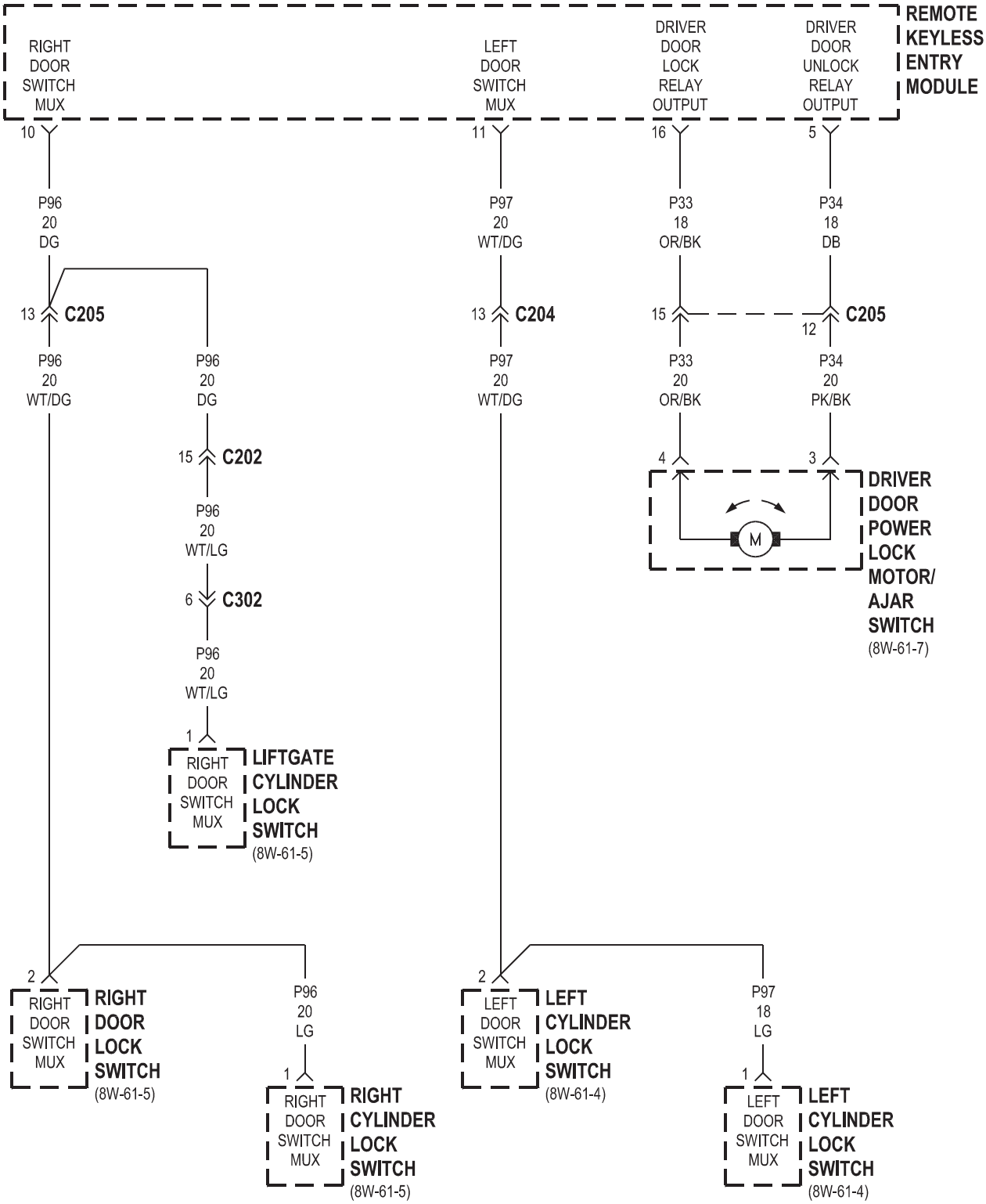
REMOTE KEYLESS ENTRY MODULE
RIGHT DOOR SWITCH MUX
LEFT DOOR SWITCH MUX
DRIVER DOOR LOCK RELAY OUTPUT
DRIVER DOOR UNLOCK RELAY OUTPUT
10
11
16
5
P96 20 DG
P97 20 WT/DG
P33 18 OR/BK
P34 18 DB
13 C205
13 C204
15
12 C205
P96 20 WT/DG
P96 20 DG
P97 20 WT/DG
P33 20 OR/BK
P34 20 PK/BK
15 C202
4
3
DRIVER DOOR POWER LOCK MOTOR/ AJAR SWITCH
(8W-61-7)
M
P96 20 WT/LG
6 C302
P96 20 WT/LG
1
RIGHT DOOR SWITCH MUX
LIFTGATE CYLINDER LOCK SWITCH
(8W-61-5)
2
RIGHT DOOR SWITCH MUX
RIGHT DOOR LOCK SWITCH
(8W-61-5)
P96 20 LG
1
RIGHT DOOR SWITCH MUX
RIGHT CYLINDER LOCK SWITCH
(8W-61-5)
2
LEFT DOOR SWITCH MUX
LEFT CYLINDER LOCK SWITCH
(8W-61-4)
P97 18 LG
1
LEFT DOOR SWITCH MUX
LEFT CYLINDER LOCK SWITCH
(8W-61-4)

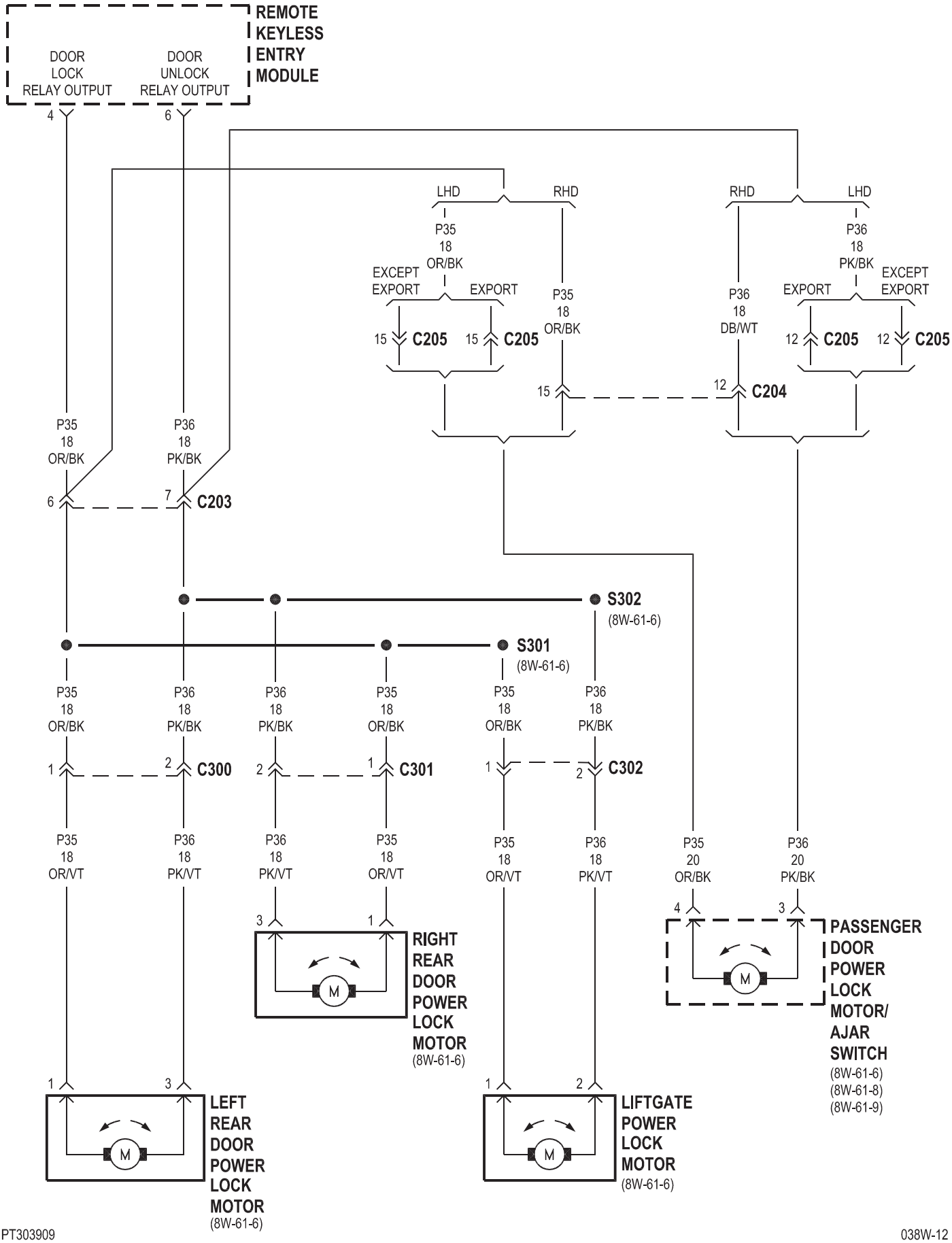
REMOTE KEYLESS ENTRY MODULE
DOOR LOCK RELAY OUTPUT
DOOR UNLOCK RELAY OUTPUT
4
6
LHD
RHD
P35 18 OR/BK
EXCEPT EXPORT
EXPORT
15 C205
15 C205
P35 18 OR/BK
15
RHD
LHD
P36 18 PK/BK
EXPORT
EXCEPT EXPORT
P36 18 DB/WT
12 C205
12 C205
12 C204
P35 18 OR/BK
P36 18 PK/BK
6
7 C203
S302 (8W-61-6)
S301 (8W-61-6)
P35 18 OR/BK
P36 18 PK/BK
P36 18 PK/BK
P35 18 OR/BK
P35 18 OR/BK
P36 18 PK/BK
1
2 C300
2
1 C301
1
2 C302
P35 18 OR/VT
P36 18 PK/VT
P36 18 PK/VT
P35 18 OR/VT
P35 18 OR/VT
P36 18 PK/VT
P35 20 OR/BK
P36 20 PK/BK
3
1
RIGHT REAR DOOR POWER LOCK MOTOR (8W-61-6)
4
3
PASSENGER DOOR POWER LOCK MOTOR/ AJAR SWITCH (8W-61-6) (8W-61-8) (8W-61-9)
1
3
LEFT REAR DOOR POWER LOCK MOTOR (8W-61-6)
1
2
LIFTGATE POWER LOCK MOTOR (8W-61-6)
M

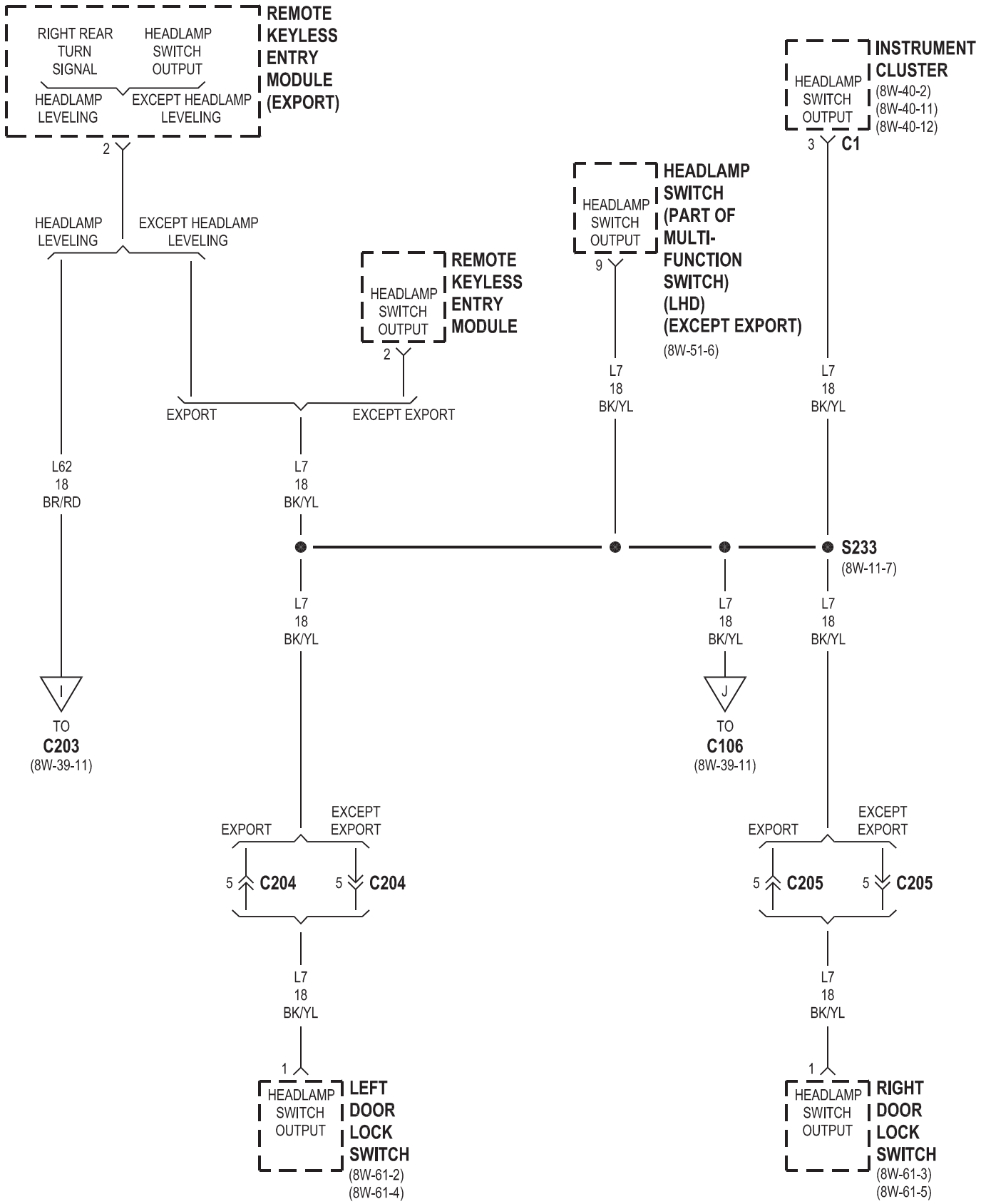
REMOTE KEYLESS ENTRY MODULE (EXPORT)
RIGHT REAR TURN SIGNAL
HEADLAMP SWITCH OUTPUT
HEADLAMP LEVELING
EXCEPT HEADLAMP LEVELING
2
INSTRUMENT CLUSTER
(8W-40-2)
(8W-40-11)
(8W-40-12)
HEADLAMP SWITCH OUTPUT
3
C1
HEADLAMP SWITCH (PART OF MULTI-FUNCTION SWITCH) (LHD) (EXCEPT EXPORT)
(8W-51-6)
9
REMOTE KEYLESS ENTRY MODULE
2
EXPORT
EXCEPT EXPORT
L62
18
BR/RD
L7
18
BK/YL
S233
(8W-11-7)
I
TO
C203
(8W-39-11)
J
TO
C106
(8W-39-11)
EXPORT
EXCEPT EXPORT
5
C204
C205
1
LEFT DOOR LOCK SWITCH
(8W-61-2)
(8W-61-4)
RIGHT DOOR LOCK SWITCH
(8W-61-3)
(8W-61-5)

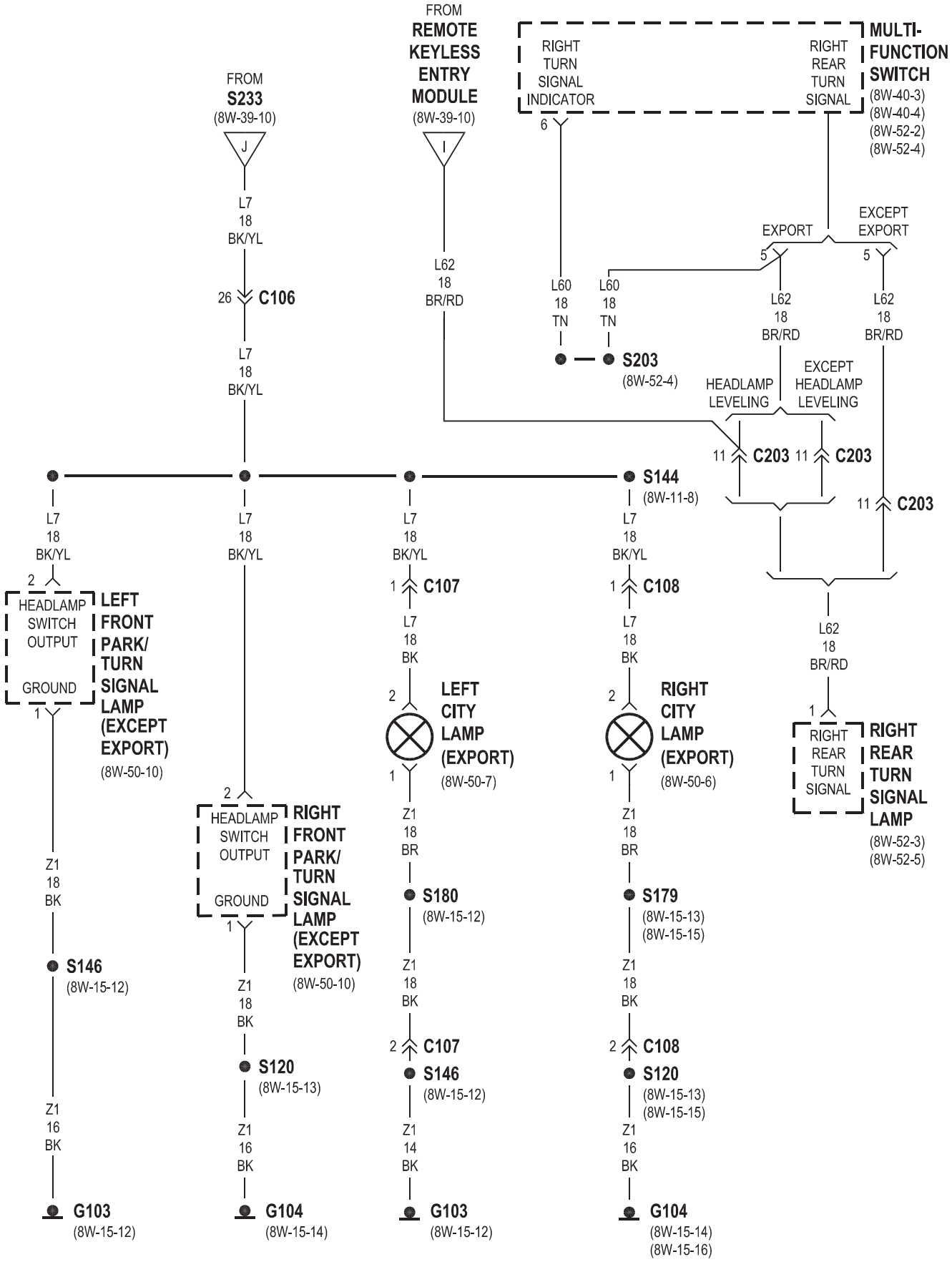
FROM
S233
(8W-39-10)
J
L7
18
BK/YL
26
C106
L7
18
BK/YL
FROM
REMOTE
KEYLESS
ENTRY
MODULE
(8W-39-10)
I
L62
18
BR/RD
RIGHT
TURN
SIGNAL
INDICATOR
RIGHT
REAR
TURN
SIGNAL
MULTI-
FUNCTION
SWITCH
(8W-40-3)
(8W-40-4)
(8W-52-2)
(8W-52-4)
6
L60
18
TN
L60
18
TN
S203
(8W-52-4)
EXPORT
EXCEPT
EXPORT
5
5
L62
18
BR/RD
L62
18
BR/RD
HEADLAMP
LEVELING
EXCEPT
HEADLAMP
LEVELING
11
C203
11
C203
11
C203
S144
(8W-11-8)
L7
18
BK/YL
L7
18
BK/YL
L7
18
BK/YL
L7
18
BK/YL
2
HEADLAMP
SWITCH
OUTPUT
GROUND
1
LEFT
FRONT
PARK/
TURN
SIGNAL
LAMP
(EXCEPT
EXPORT)
(8W-50-10)
Z1
18
BK
S146
(8W-15-12)
Z1
16
BK
G103
(8W-15-12)
2
HEADLAMP
SWITCH
OUTPUT
GROUND
1
RIGHT
FRONT
PARK/
TURN
SIGNAL
LAMP
(EXCEPT
EXPORT)
(8W-50-10)
Z1
18
BK
S120
(8W-15-13)
Z1
16
BK
G104
(8W-15-14)
1
C107
L7
18
BK
2
LEFT
CITY
LAMP
(EXPORT)
(8W-50-7)
1
Z1
18
BR
S180
(8W-15-12)
Z1
18
BK
2
C107
S146
(8W-15-12)
Z1
14
BK
G103
(8W-15-12)
1
C108
L7
18
BK
2
RIGHT
CITY
LAMP
(EXPORT)
(8W-50-6)
1
Z1
18
BR
S179
(8W-15-13)
(8W-15-15)
Z1
18
BK
2
C108
S120
(8W-15-13)
(8W-15-15)
Z1
16
BK
G104
(8W-15-14)
(8W-15-16)
L62
18
BR/RD
1
RIGHT
REAR
TURN
SIGNAL
RIGHT
REAR
TURN
SIGNAL
LAMP
(8W-52-3)
(8W-52-5)

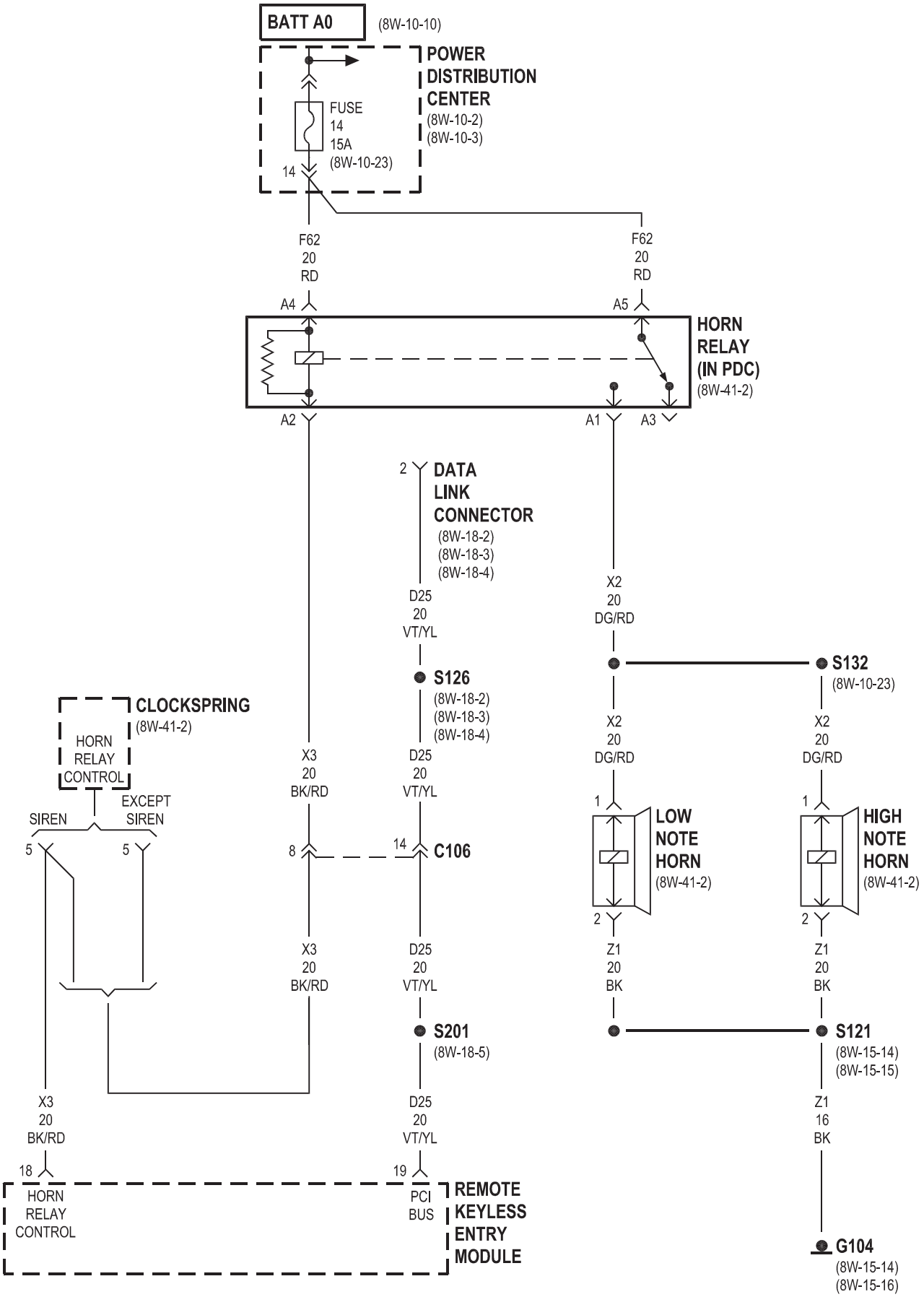
BATT A0
(8W-10-10)
POWER DISTRIBUTION CENTER
(8W-10-2)
(8W-10-3)
FUSE
14
15A
(8W-10-23)
14
F62
20
RD
F62
20
RD
A4
A5
HORN RELAY (IN PDC)
(8W-41-2)
A2
A1
A3
2
DATA LINK CONNECTOR
(8W-18-2)
(8W-18-3)
(8W-18-4)
D25
20
VT/YL
X2
20
DG/RD
S126
(8W-18-2)
(8W-18-3)
(8W-18-4)
S132
(8W-10-23)
CLOCKSPRING
(8W-41-2)
HORN RELAY CONTROL
SIREN
EXCEPT SIREN
5
5
X3
20
BK/RD
D25
20
VT/YL
X2
20
DG/RD
X2
20
DG/RD
8
14
C106
1
LOW NOTE HORN
(8W-41-2)
1
HIGH NOTE HORN
(8W-41-2)
2
2
X3
20
BK/RD
D25
20
VT/YL
Z1
20
BK
Z1
20
BK
S201
(8W-18-5)
S121
(8W-15-14)
(8W-15-15)
X3
20
BK/RD
D25
20
VT/YL
Z1
16
BK
18
19
HORN RELAY CONTROL
PCI BUS
REMOTE KEYLESS ENTRY MODULE
G104
(8W-15-14)
(8W-15-16)

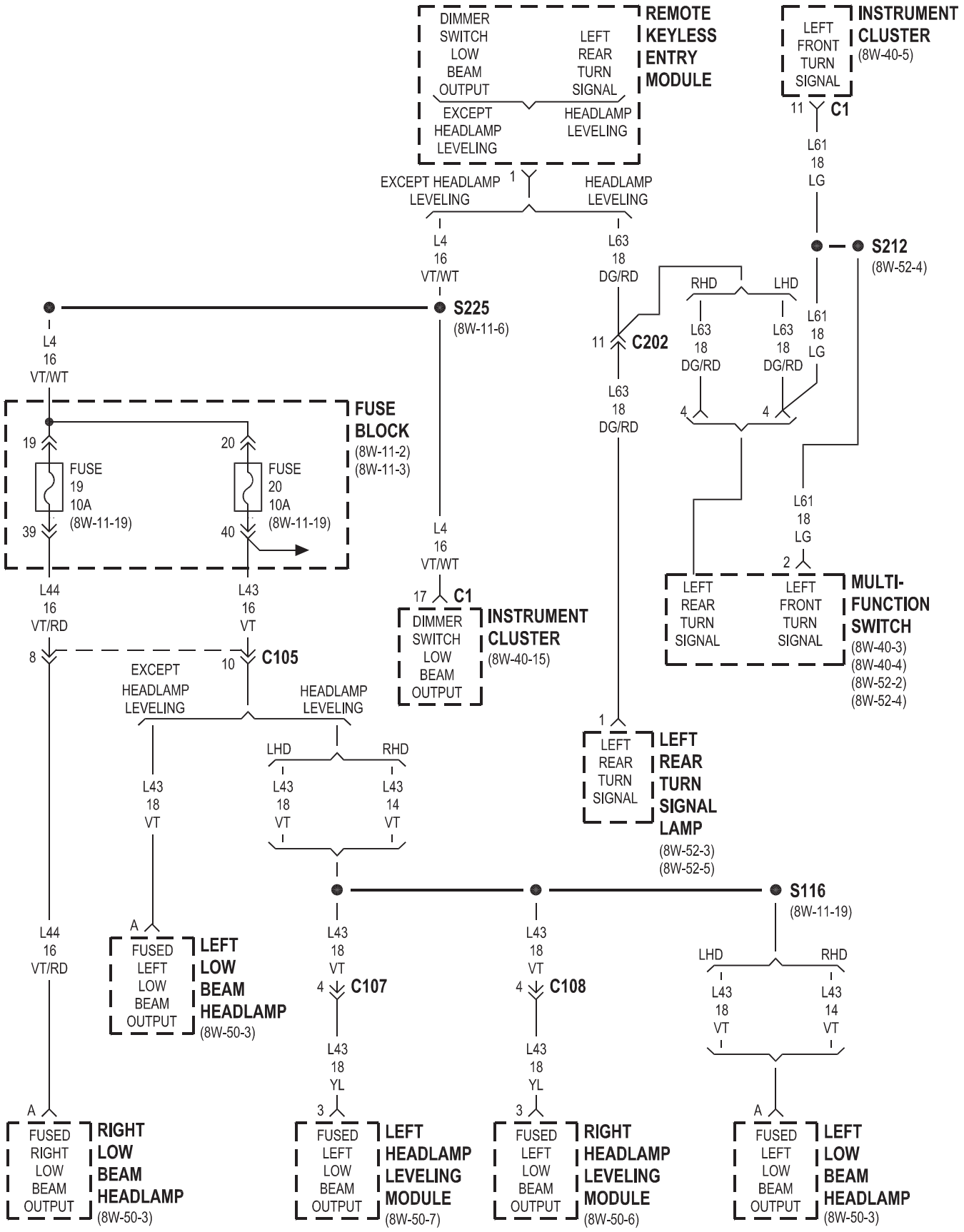
REMOTE KEYLESS ENTRY MODULE
DIMMER SWITCH LOW BEAM OUTPUT
LEFT REAR TURN SIGNAL
EXCEPT HEADLAMP LEVELING
HEADLAMP LEVELING
INSTRUMENT CLUSTER (8W-40-5)
LEFT FRONT TURN SIGNAL
11 C1
L61 18 LG
S212 (8W-52-4)
EXCEPT HEADLAMP LEVELING 1
HEADLAMP LEVELING
L4 16 VT/WT
L63 18 DG/RD
S225 (8W-11-6)
RHD
LHD
11 C202
L63 18 DG/RD
L61 18 LG
L63 18 DG/RD
4
4
FUSE BLOCK (8W-11-2) (8W-11-3)
19
20
FUSE 19 10A (8W-11-19)
FUSE 20 10A (8W-11-19)
39
40
L44 16 VT/RD
L43 16 VT
8
10 C105
L61 18 LG
2
MULTI-FUNCTION SWITCH (8W-40-3) (8W-40-4) (8W-52-2) (8W-52-4)
LEFT REAR TURN SIGNAL
LEFT FRONT TURN SIGNAL
17 C1
DIMMER SWITCH LOW BEAM OUTPUT
INSTRUMENT CLUSTER (8W-40-15)
EXCEPT HEADLAMP LEVELING
HEADLAMP LEVELING
LHD
RHD
L43 18 VT
L43 18 VT
L43 14 VT
1
LEFT REAR TURN SIGNAL
LEFT REAR TURN SIGNAL LAMP (8W-52-3) (8W-52-5)
S116 (8W-11-19)
A
FUSED LEFT LOW BEAM OUTPUT
LEFT LOW BEAM HEADLAMP (8W-50-3)
4 C107
4 C108
LHD
RHD
L43 18 YL
3
FUSED RIGHT LOW BEAM OUTPUT
RIGHT LOW BEAM HEADLAMP (8W-50-3)
FUSED LEFT LOW BEAM OUTPUT
LEFT HEADLAMP LEVELING MODULE (8W-50-7)
FUSED LEFT LOW BEAM OUTPUT
RIGHT HEADLAMP LEVELING MODULE (8W-50-6)
FUSED LEFT LOW BEAM OUTPUT
LEFT LOW BEAM HEADLAMP (8W-50-3)

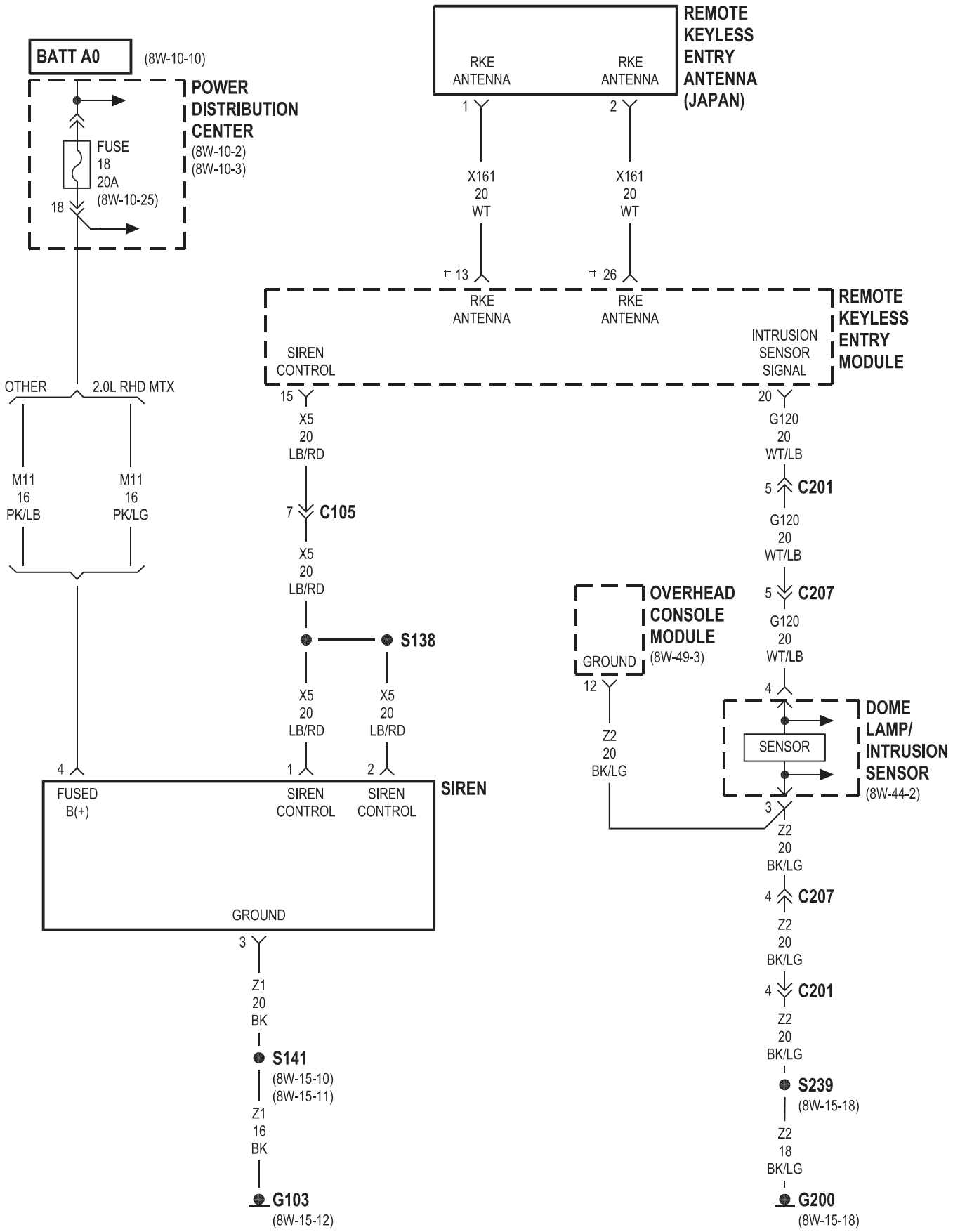
BATT A0
(8W-10-10)
POWER DISTRIBUTION CENTER
(8W-10-2)
(8W-10-3)
FUSE
18
20A
(8W-10-25)
18
REMOTE KEYLESS ENTRY ANTENNA (JAPAN)
RKE ANTENNA
RKE ANTENNA
1
2
X161
20
WT
X161
20
WT
13
26
RKE ANTENNA
RKE ANTENNA
REMOTE KEYLESS ENTRY MODULE
SIREN CONTROL
INTRUSION SENSOR SIGNAL
OTHER
2.0L RHD MTX
M11
16
PK/LB
M11
16
PK/LG
15
X5
20
LB/RD
7
C105
X5
20
LB/RD
S138
X5
20
LB/RD
X5
20
LB/RD
20
G120
20
WT/LB
5
C201
G120
20
WT/LB
5
C207
G120
20
WT/LB
OVERHEAD CONSOLE MODULE
(8W-49-3)
GROUND
12
Z2
20
BK/LG
4
DOME LAMP/ INTRUSION SENSOR
(8W-44-2)
SENSOR
3
Z2
20
BK/LG
4
C207
Z2
20
BK/LG
4
C201
Z2
20
BK/LG
S239
(8W-15-18)
Z2
18
BK/LG
G200
(8W-15-18)
4
FUSED B(+)
1
SIREN CONTROL
2
SIREN CONTROL
SIREN
GROUND
3
Z1
20
BK
S141
(8W-15-10)
(8W-15-11)
Z1
16
BK
G103
(8W-15-12)

JAPAN

8W-40 INSTRUMENT CLUSTER

Component	Page
A/C-Heater Control Switch	8W-40-13
Airbag Control Module	8W-40-6
Cargo Lamp	8W-40-11
Center Stack Lamp	8W-40-13
Controller Antilock Brake	8W-40-6
Data Link Connector	8W-40-6, 15
Dome Lamp	8W-40-11
Dome Lamp/Intrusion Sensor	8W-40-11
Driver Door Power Lock Motor/Ajar Switch	8W-40-9, 10
Driver Seat Belt Switch	8W-40-14
Engine Control Module	8W-40-6
Front Power Window Switch	8W-40-13
Fuel Pump Module	8W-40-6
Fuse 1	8W-40-15
Fuse 2	8W-40-2
Fuse 8	8W-40-16
Fuse 10	8W-40-2
Fuse 13	8W-40-2
Fuse 15	8W-40-3, 4
Fuse 19	8W-40-3, 4
Fuse 22	8W-40-17
Fuse Block	8W-40-2, 3, 4, 15, 16
G200	8W-40-2, 3, 4, 12
G201	8W-40-2, 12
G300	8W-40-8, 14
Headlamp Leveling Switch	8W-40-13
Headlamp Relay	8W-40-16
Headlamp Switch	8W-40-2, 11, 12, 14, 15, 16, 17
Ignition Switch	8W-40-8, 15
Instrument Cluster	8W-40-2, 3, 4, 5, 6, 7, 8, 9, 10, 11, 12, 13, 14, 15, 16, 17
Left Fog Lamp	8W-40-16, 17
Left Front Park/Turn Signal Lamp	8W-40-5
Left Rear Door Ajar Switch	8W-40-9, 10
Left Rear Fog Lamp	8W-40-17
Left Rear Turn Signal Lamp	8W-40-5
Left Turn Signal Indicator	8W-40-3, 4, 5
Liftgate Ajar Switch	8W-40-8
Multi-Function Switch	8W-40-3, 4, 5, 12
Overhead Console Module	8W-40-11, 13
Parking Brake Switch	8W-40-14
Passenger Door Power Lock Motor/Ajar Switch	8W-40-9, 10
Power Distribution Center	8W-40-3, 4, 17
Powertrain Control Module	8W-40-6
Radio	8W-40-6, 13
Rear Window Defogger Switch	8W-40-13
Rear Wiper Switch	8W-40-13
Remote Keyless Entry Module	8W-40-5, 6, 8, 9, 10
Right Fog Lamp	8W-40-16, 17
Right Front Park/Turn Signal Lamp	8W-40-5
Right Rear Door Ajar Switch	8W-40-9, 10
Right Rear Fog Lamp	8W-40-17
Right Rear Turn Signal Lamp	8W-40-5
Right Turn Signal Indicator	8W-40-3, 4, 5
Sentry Key Immobilizer Module	8W-40-6
Traction Control Switch	8W-40-13
Transmission Range Indicator Illumination	8W-40-13

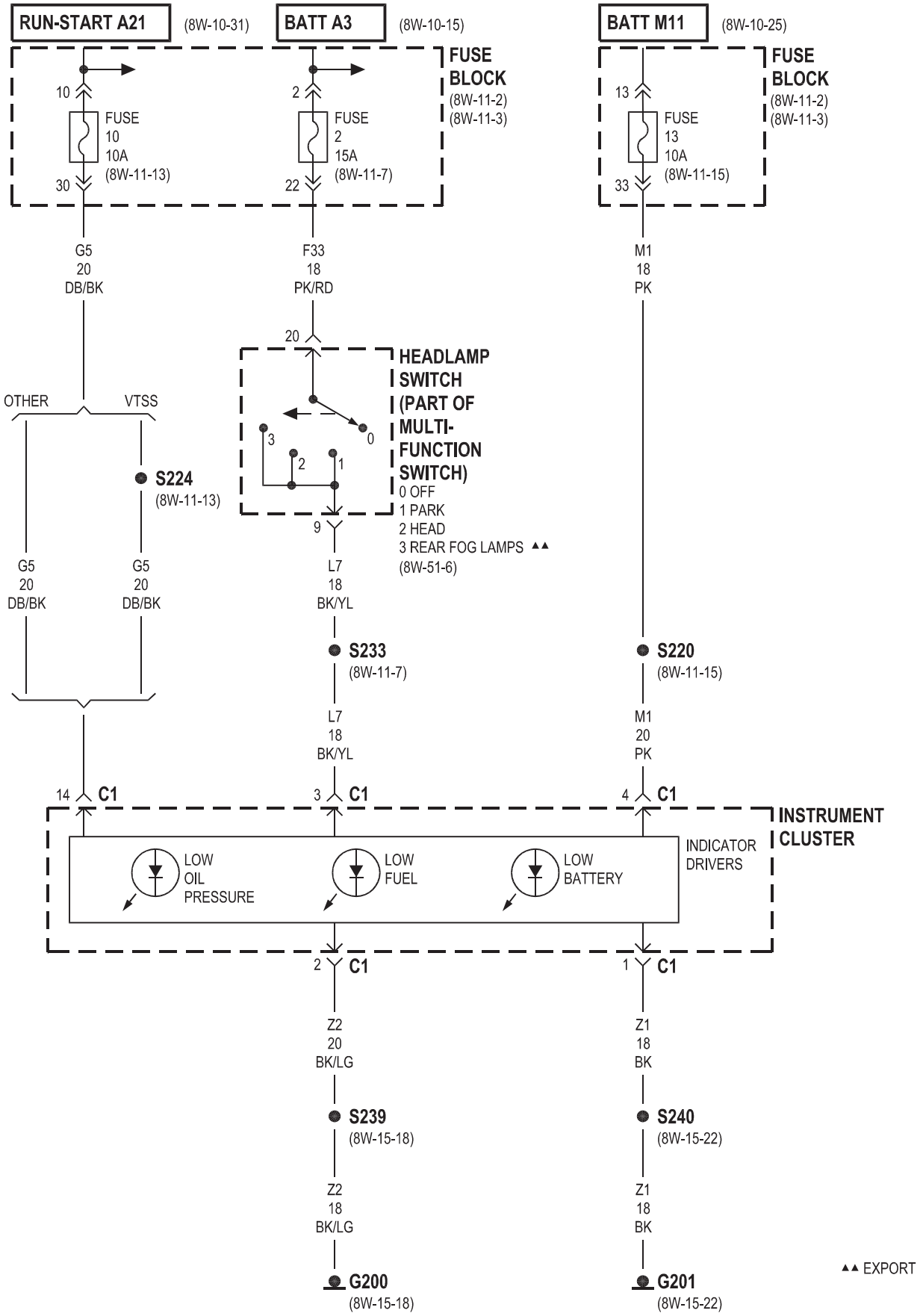
RUN-START A21
(8W-10-31)
BATT A3
(8W-10-15)
BATT M11
(8W-10-25)
FUSE BLOCK
(8W-11-2)
(8W-11-3)
10
FUSE
10
10A
(8W-11-13)
30
2
FUSE
2
15A
(8W-11-7)
22
13
FUSE
13
10A
(8W-11-15)
33
G5
20
DB/BK
F33
18
PK/RD
M1
18
PK
20
HEADLAMP SWITCH (PART OF MULTI-FUNCTION SWITCH)
0 OFF
1 PARK
2 HEAD
3 REAR FOG LAMPS ▲▲
(8W-51-6)
OTHER
VTSS
S224
(8W-11-13)
9
G5
20
DB/BK
G5
20
DB/BK
L7
18
BK/YL
S233
(8W-11-7)
S220
(8W-11-15)
L7
18
BK/YL
M1
20
PK
14 C1
3 C1
4 C1
INSTRUMENT CLUSTER
LOW OIL PRESSURE
LOW FUEL
LOW BATTERY
INDICATOR DRIVERS
2 C1
1 C1
Z2
20
BK/LG
Z1
18
BK
S239
(8W-15-18)
S240
(8W-15-22)
Z2
18
BK/LG
Z1
18
BK
G200
(8W-15-18)
G201
(8W-15-22)
▲▲ EXPORT

EXCEPT EXPORT

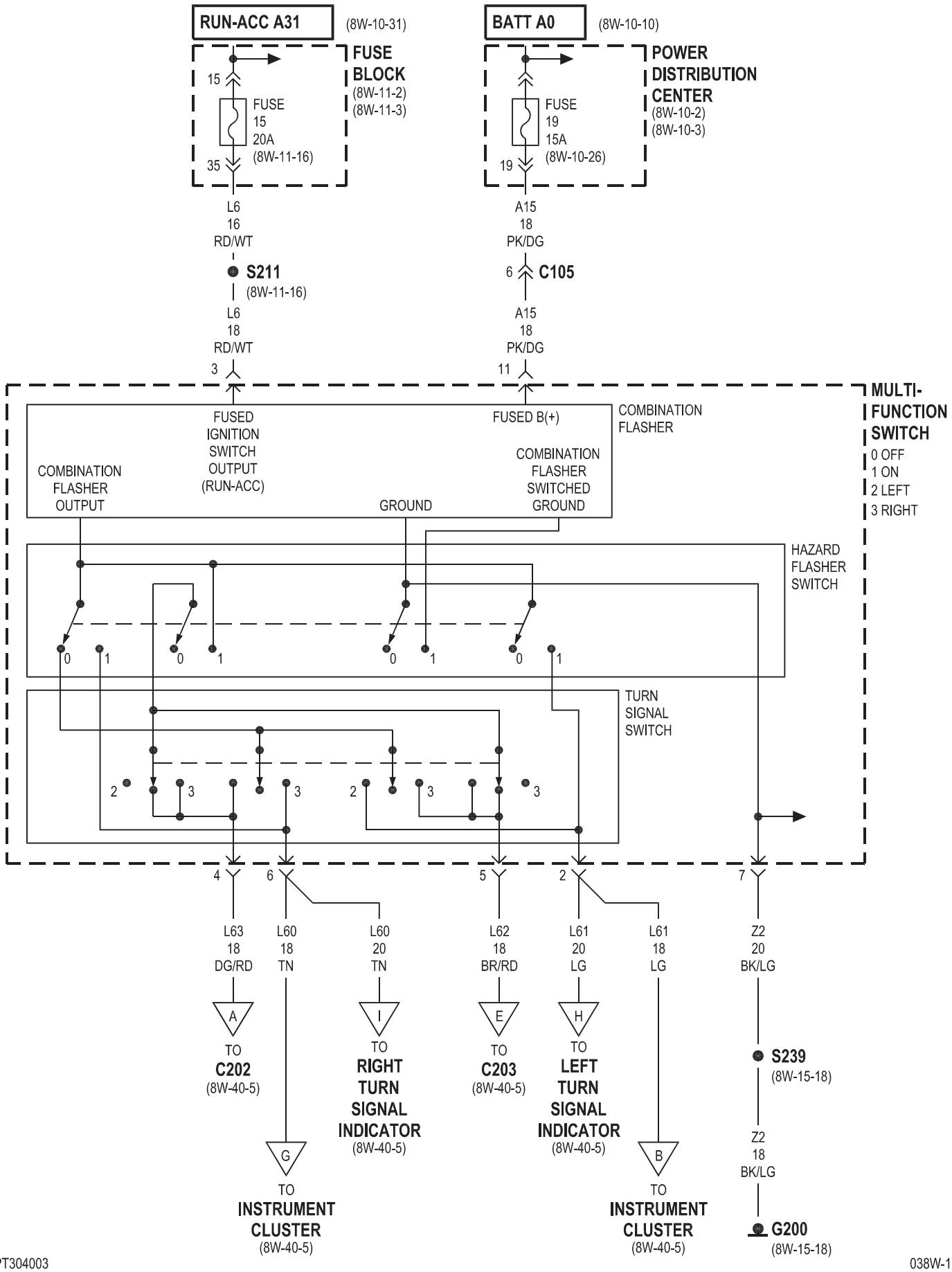

EXPORT

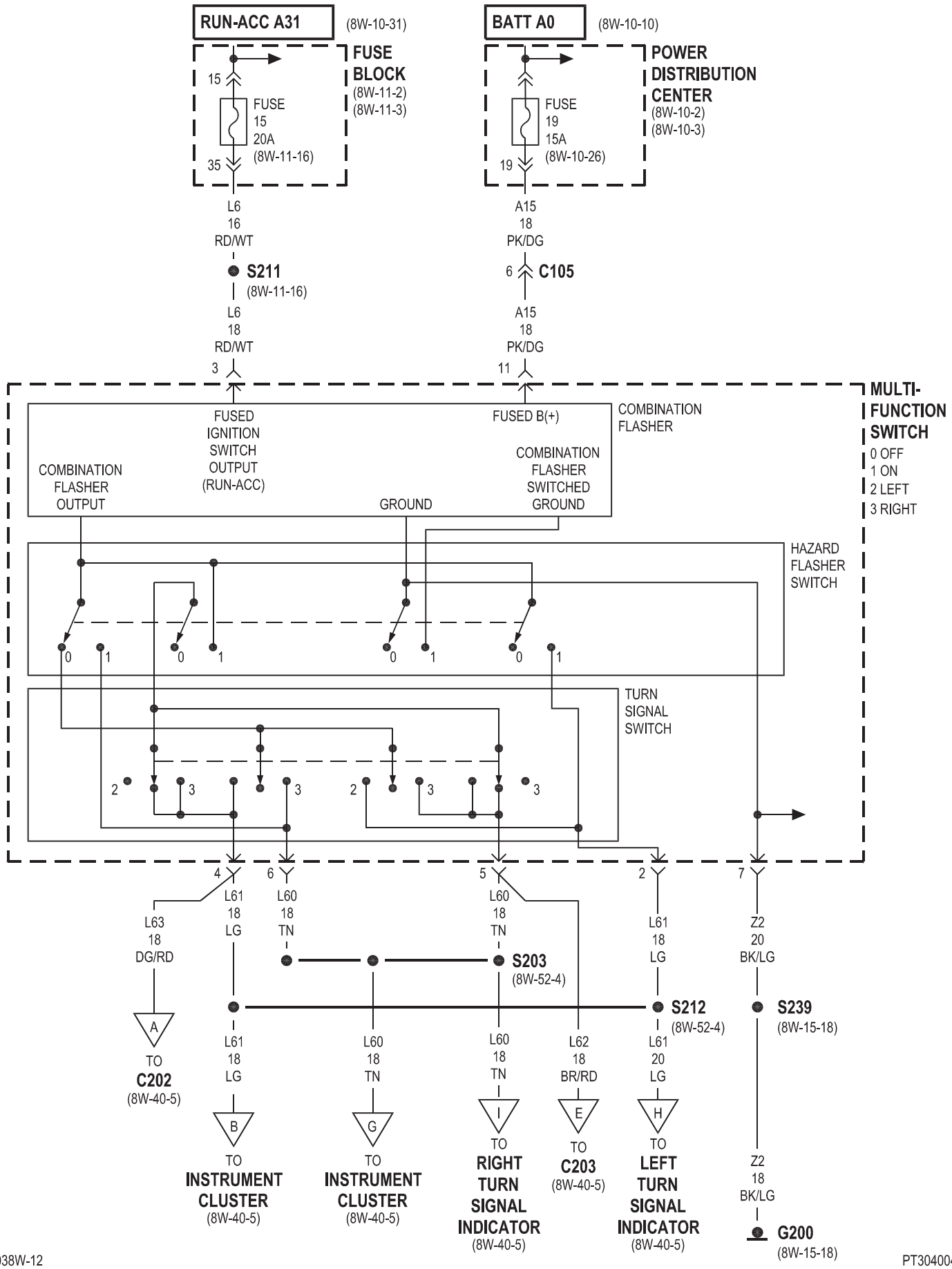
RUN-ACC A31
(8W-10-31)
BATT A0
(8W-10-10)
FUSE BLOCK
(8W-11-2)
(8W-11-3)
POWER DISTRIBUTION CENTER
(8W-10-2)
(8W-10-3)
15
FUSE 15 20A
(8W-11-16)
35
FUSE 19 15A
(8W-10-26)
19
L6 16 RD/WT
A15 18 PK/DG
S211
(8W-11-16)
6
C105
L6 18 RD/WT
A15 18 PK/DG
3
11
MULTI-FUNCTION SWITCH
0 OFF
1 ON
2 LEFT
3 RIGHT
COMBINATION FLASHER
FUSED IGNITION SWITCH OUTPUT (RUN-ACC)
FUSED B(+)
COMBINATION FLASHER OUTPUT
GROUND
COMBINATION FLASHER SWITCHED GROUND
HAZARD FLASHER SWITCH
TURN SIGNAL SWITCH
4
6
5
2
7
L63 18 DG/RD
L61 18 LG
L60 18 TN
L60 18 TN
L61 18 LG
Z2 20 BK/LG
S203
(8W-52-4)
S212
(8W-52-4)
S239
(8W-15-18)
A
TO C202
(8W-40-5)
L61 18 LG
L60 18 TN
L60 18 TN
L62 18 BR/RD
L61 20 LG
B
G
I
E
H
TO INSTRUMENT CLUSTER
(8W-40-5)
TO INSTRUMENT CLUSTER
(8W-40-5)
TO RIGHT TURN SIGNAL INDICATOR
(8W-40-5)
TO C203
(8W-40-5)
TO LEFT TURN SIGNAL INDICATOR
(8W-40-5)
Z2 18 BK/LG
G200
(8W-15-18)

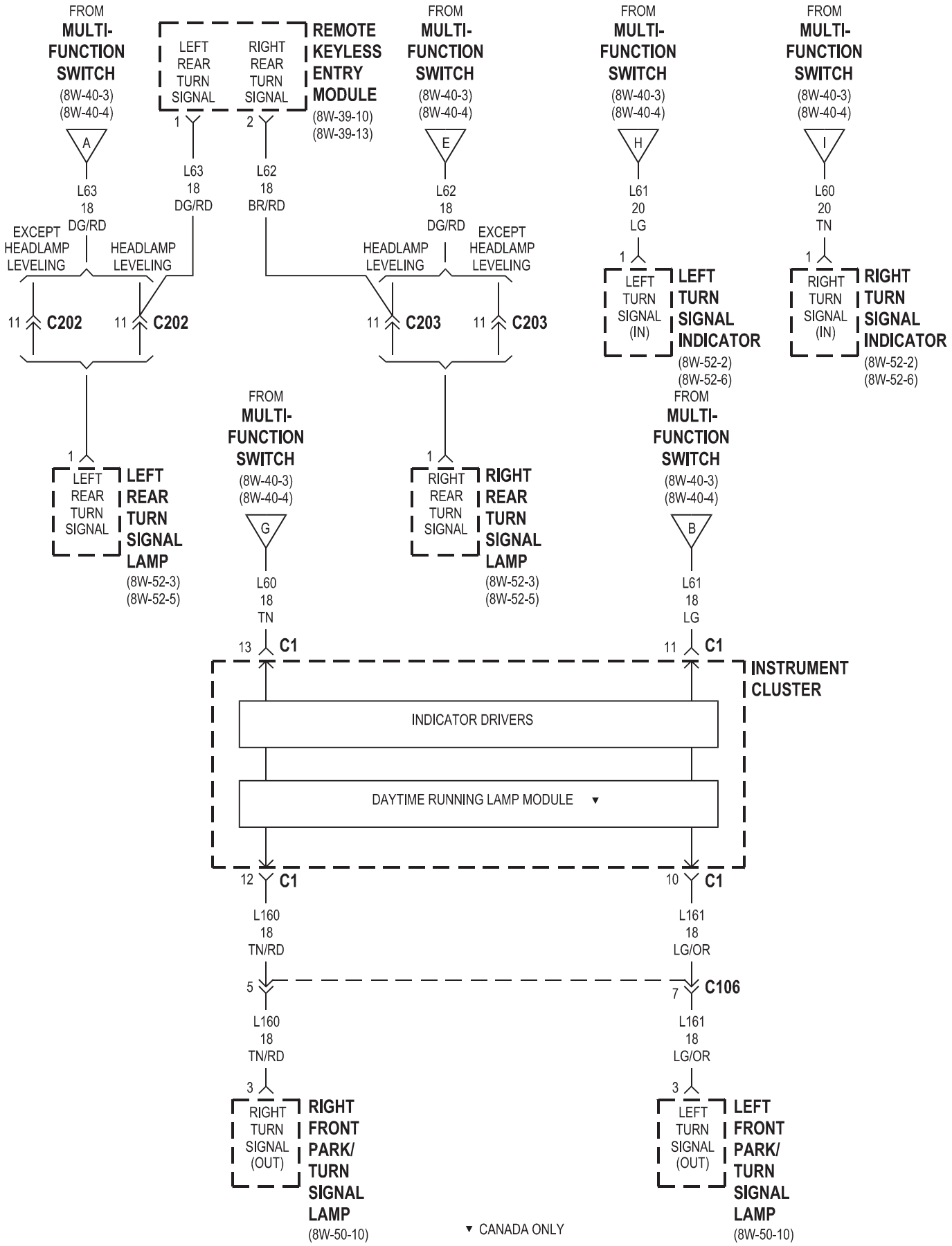
FROM MULTI-FUNCTION SWITCH (8W-40-3) (8W-40-4)
A
L63 18 DG/RD
EXCEPT HEADLAMP LEVELING
HEADLAMP LEVELING
11 C202
11 C202
LEFT REAR TURN SIGNAL
RIGHT REAR TURN SIGNAL
REMOTE KEYLESS ENTRY MODULE (8W-39-10) (8W-39-13)
1
2
L63 18 DG/RD
L62 18 BR/RD
FROM MULTI-FUNCTION SWITCH (8W-40-3) (8W-40-4)
E
L62 18 DG/RD
HEADLAMP LEVELING
EXCEPT HEADLAMP LEVELING
11 C203
11 C203
FROM MULTI-FUNCTION SWITCH (8W-40-3) (8W-40-4)
H
L61 20 LG
1
LEFT TURN SIGNAL (IN)
LEFT TURN SIGNAL INDICATOR (8W-52-2) (8W-52-6)
FROM MULTI-FUNCTION SWITCH (8W-40-3) (8W-40-4)
I
L60 20 TN
1
RIGHT TURN SIGNAL (IN)
RIGHT TURN SIGNAL INDICATOR (8W-52-2) (8W-52-6)
1
LEFT REAR TURN SIGNAL
LEFT REAR TURN SIGNAL LAMP (8W-52-3) (8W-52-5)
FROM MULTI-FUNCTION SWITCH (8W-40-3) (8W-40-4)
G
L60 18 TN
1
RIGHT REAR TURN SIGNAL
RIGHT REAR TURN SIGNAL LAMP (8W-52-3) (8W-52-5)
FROM MULTI-FUNCTION SWITCH (8W-40-3) (8W-40-4)
B
L61 18 LG
13 C1
11 C1
INSTRUMENT CLUSTER
INDICATOR DRIVERS
DAYTIME RUNNING LAMP MODULE ▼
12 C1
10 C1
L160 18 TN/RD
L161 18 LG/OR
5
7 C106
L160 18 TN/RD
L161 18 LG/OR
3
3
RIGHT TURN SIGNAL (OUT)
RIGHT FRONT PARK/ TURN SIGNAL LAMP (8W-50-10)
LEFT TURN SIGNAL (OUT)
LEFT FRONT PARK/ TURN SIGNAL LAMP (8W-50-10)
▼ CANADA ONLY

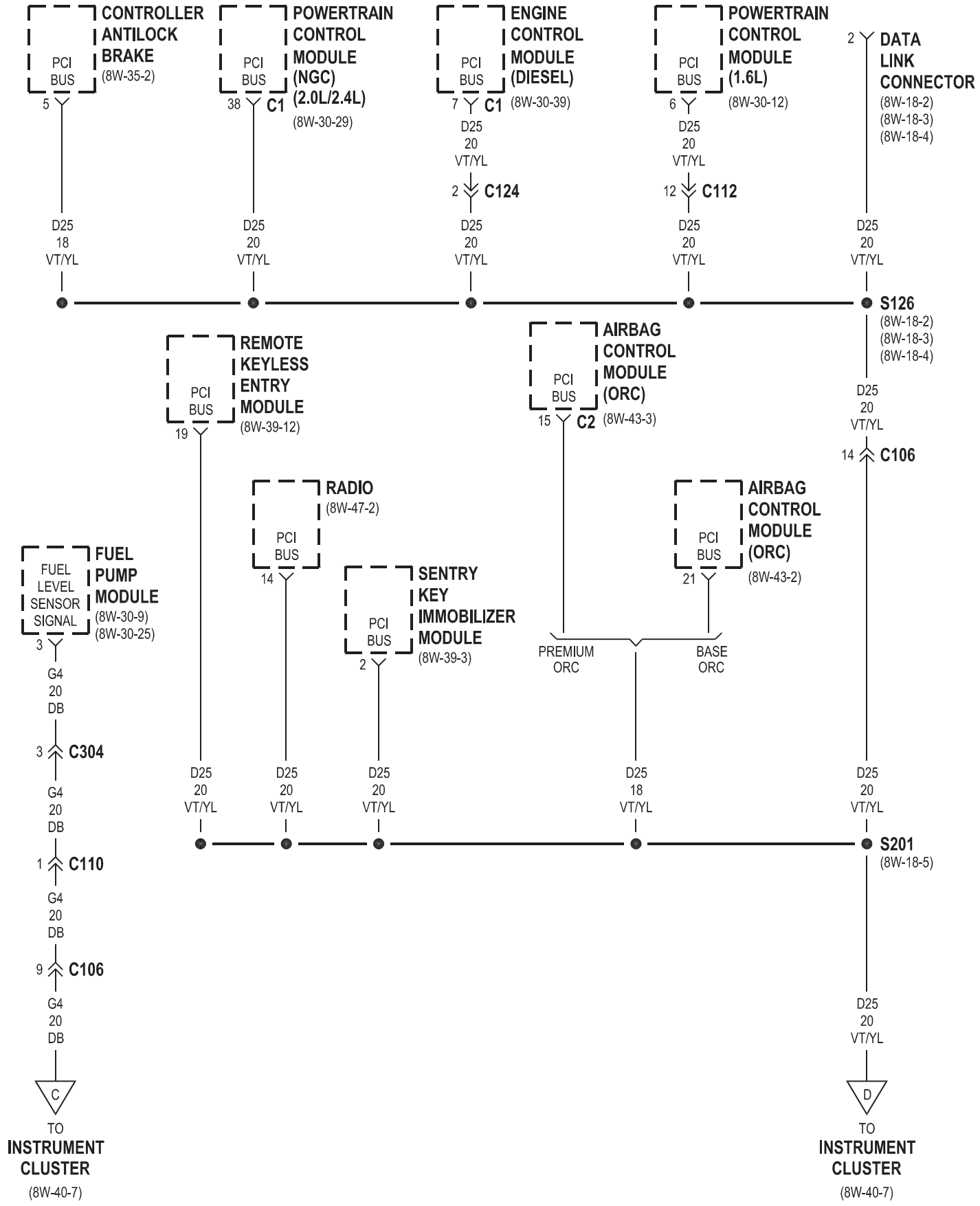
CONTROLLER ANTILOCK BRAKE (8W-35-2)
PCI BUS
5
POWERTRAIN CONTROL MODULE (NGC) (2.0L/2.4L) (8W-30-29)
PCI BUS
38 C1
ENGINE CONTROL MODULE (DIESEL) (8W-30-39)
PCI BUS
7 C1
D25 20 VT/YL
2 C124
POWERTRAIN CONTROL MODULE (1.6L) (8W-30-12)
PCI BUS
6
D25 20 VT/YL
12 C112
2 DATA LINK CONNECTOR (8W-18-2) (8W-18-3) (8W-18-4)
D25 18 VT/YL
D25 20 VT/YL
D25 20 VT/YL
D25 20 VT/YL
D25 20 VT/YL
S126 (8W-18-2) (8W-18-3) (8W-18-4)
REMOTE KEYLESS ENTRY MODULE (8W-39-12)
PCI BUS
19
AIRBAG CONTROL MODULE (ORC) (8W-43-3)
PCI BUS
15 C2
D25 20 VT/YL
14 C106
RADIO (8W-47-2)
PCI BUS
14
AIRBAG CONTROL MODULE (ORC) (8W-43-2)
PCI BUS
21
FUEL PUMP MODULE (8W-30-9) (8W-30-25)
FUEL LEVEL SENSOR SIGNAL
3
SENTRY KEY IMMOBILIZER MODULE (8W-39-3)
PCI BUS
2
PREMIUM ORC
BASE ORC
G4 20 DB
3 C304
G4 20 DB
1 C110
G4 20 DB
9 C106
G4 20 DB
D25 20 VT/YL
D25 20 VT/YL
D25 20 VT/YL
D25 18 VT/YL
D25 20 VT/YL
S201 (8W-18-5)
D25 20 VT/YL
C
TO INSTRUMENT CLUSTER (8W-40-7)
D
TO INSTRUMENT CLUSTER (8W-40-7)

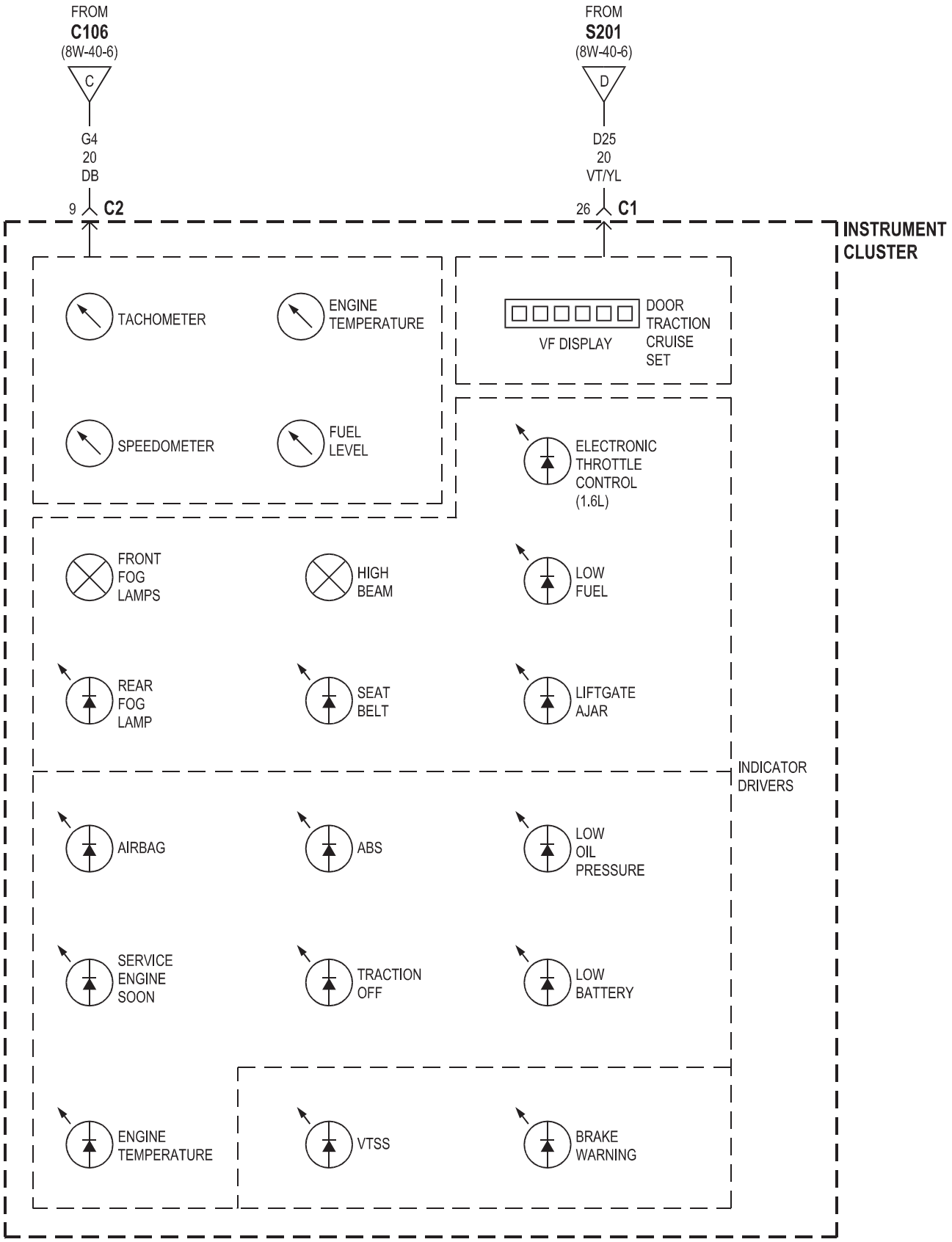
FROM
C106
(8W-40-6)
C
G4
20
DB
9
C2
FROM
S201
(8W-40-6)
D
D25
20
VT/YL
26
C1
INSTRUMENT CLUSTER
TACHOMETER
ENGINE TEMPERATURE
SPEEDOMETER
FUEL LEVEL
VF DISPLAY
DOOR
TRACTION
CRUISE
SET
ELECTRONIC THROTTLE CONTROL (1.6L)
FRONT FOG LAMPS
HIGH BEAM
LOW FUEL
REAR FOG LAMP
SEAT BELT
LIFTGATE AJAR
INDICATOR DRIVERS
AIRBAG
ABS
LOW OIL PRESSURE
SERVICE ENGINE SOON
TRACTION OFF
LOW BATTERY
ENGINE TEMPERATURE
VTSS
BRAKE WARNING

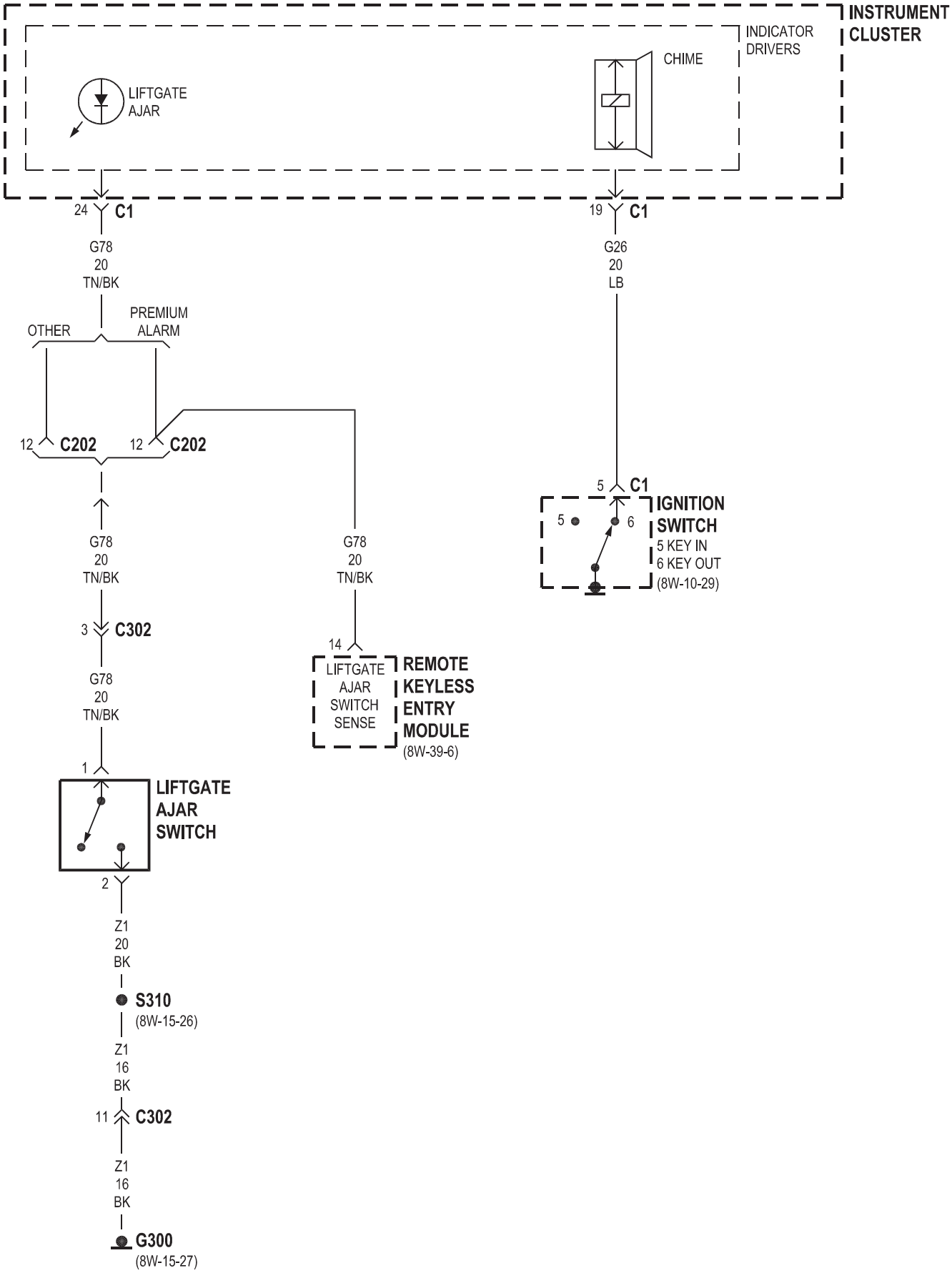
INSTRUMENT CLUSTER
INDICATOR DRIVERS
CHIME
LIFTGATE AJAR
24 C1
19 C1
G78 20 TN/BK
G26 20 LB
OTHER
PREMIUM ALARM
12 C202
12 C202
5 C1
IGNITION SWITCH
5 KEY IN
6 KEY OUT
(8W-10-29)
G78 20 TN/BK
G78 20 TN/BK
3 C302
14
LIFTGATE AJAR SWITCH SENSE
REMOTE KEYLESS ENTRY MODULE
(8W-39-6)
G78 20 TN/BK
1
LIFTGATE AJAR SWITCH
2
Z1 20 BK
S310
(8W-15-26)
Z1 16 BK
11 C302
Z1 16 BK
G300
(8W-15-27)

LHD

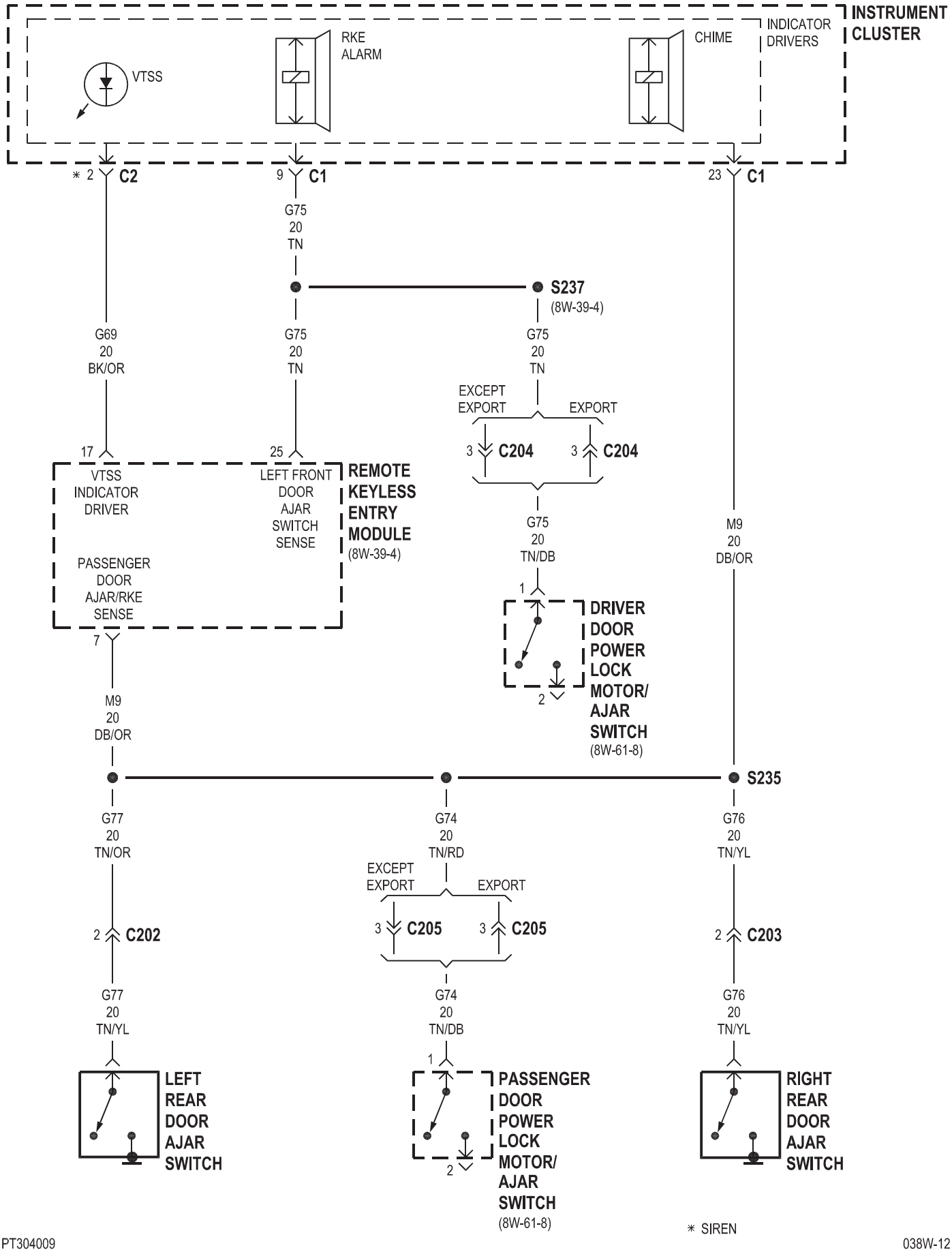
INSTRUMENT CLUSTER
INDICATOR DRIVERS
VTSS
RKE ALARM
CHIME
* 2 C2
9 C1
23 C1
G75 20 TN
S237
(8W-39-4)
G69 20 BK/OR
G75 20 TN
G75 20 TN
EXCEPT EXPORT
EXPORT
3 C204
3 C204
17
25
VTSS INDICATOR DRIVER
LEFT FRONT DOOR AJAR SWITCH SENSE
REMOTE KEYLESS ENTRY MODULE
(8W-39-4)
PASSENGER DOOR AJAR/RKE SENSE
G75 20 TN/DB
M9 20 DB/OR
1
DRIVER DOOR POWER LOCK MOTOR/ AJAR SWITCH
(8W-61-8)
2
7
M9 20 DB/OR
S235
G77 20 TN/OR
G74 20 TN/RD
G76 20 TN/YL
EXCEPT EXPORT
EXPORT
3 C205
3 C205
2 C202
2 C203
G77 20 TN/YL
G74 20 TN/DB
G76 20 TN/YL
1
LEFT REAR DOOR AJAR SWITCH
PASSENGER DOOR POWER LOCK MOTOR/ AJAR SWITCH
(8W-61-8)
2
RIGHT REAR DOOR AJAR SWITCH
* SIREN

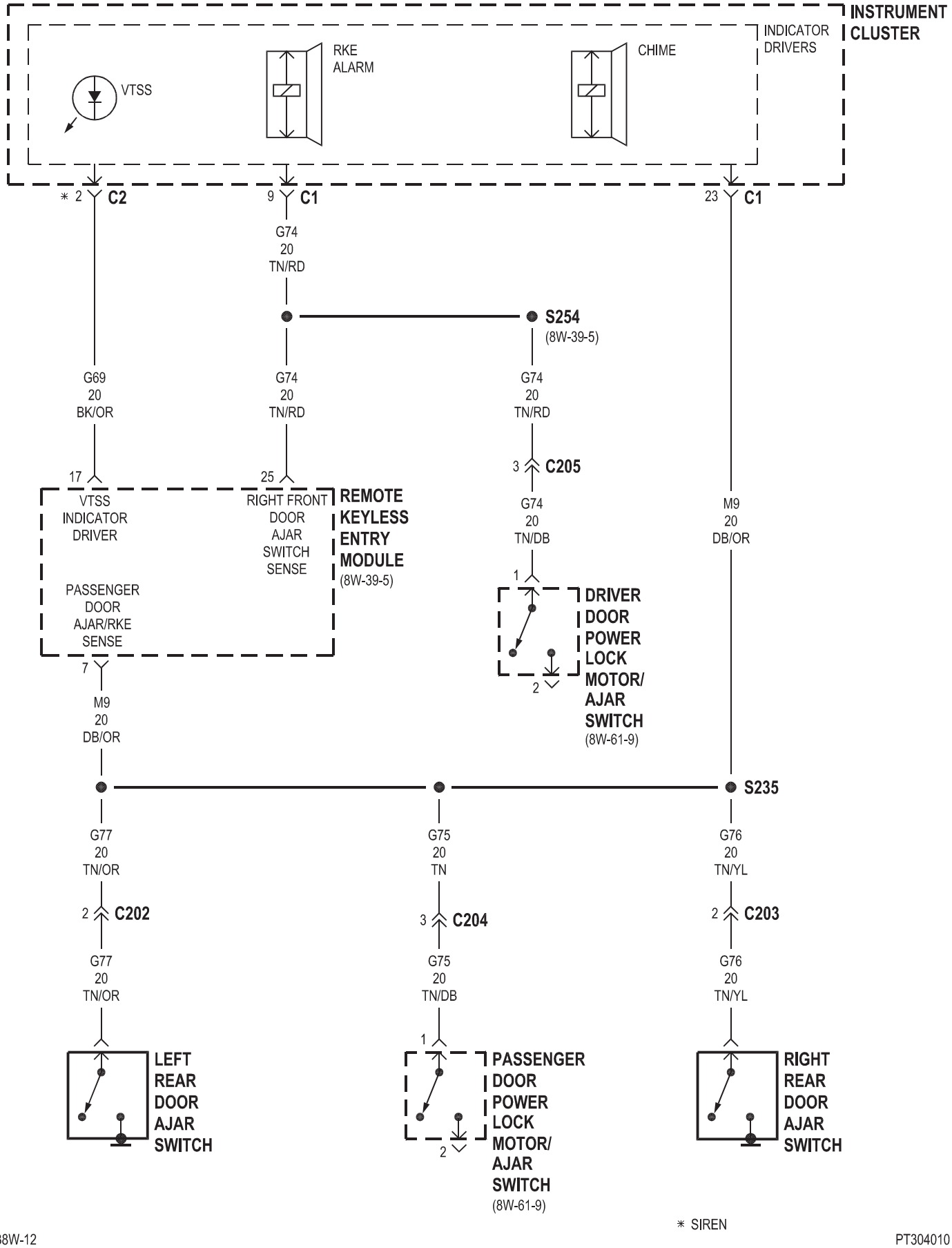
INSTRUMENT CLUSTER
INDICATOR DRIVERS
VTSS
RKE ALARM
CHIME
* 2 C2
9 C1
23 C1
G74 20 TN/RD
S254
(8W-39-5)
G69 20 BK/OR
G74 20 TN/RD
G74 20 TN/RD
3 C205
17
25
VTSS INDICATOR DRIVER
RIGHT FRONT DOOR AJAR SWITCH SENSE
REMOTE KEYLESS ENTRY MODULE
(8W-39-5)
PASSENGER DOOR AJAR/RKE SENSE
G74 20 TN/DB
M9 20 DB/OR
1
2
DRIVER DOOR POWER LOCK MOTOR/ AJAR SWITCH
(8W-61-9)
7
M9 20 DB/OR
S235
G77 20 TN/OR
G75 20 TN
G76 20 TN/YL
2 C202
3 C204
2 C203
G77 20 TN/OR
G75 20 TN/DB
G76 20 TN/YL
1
2
LEFT REAR DOOR AJAR SWITCH
PASSENGER DOOR POWER LOCK MOTOR/ AJAR SWITCH
(8W-61-9)
RIGHT REAR DOOR AJAR SWITCH
* SIREN

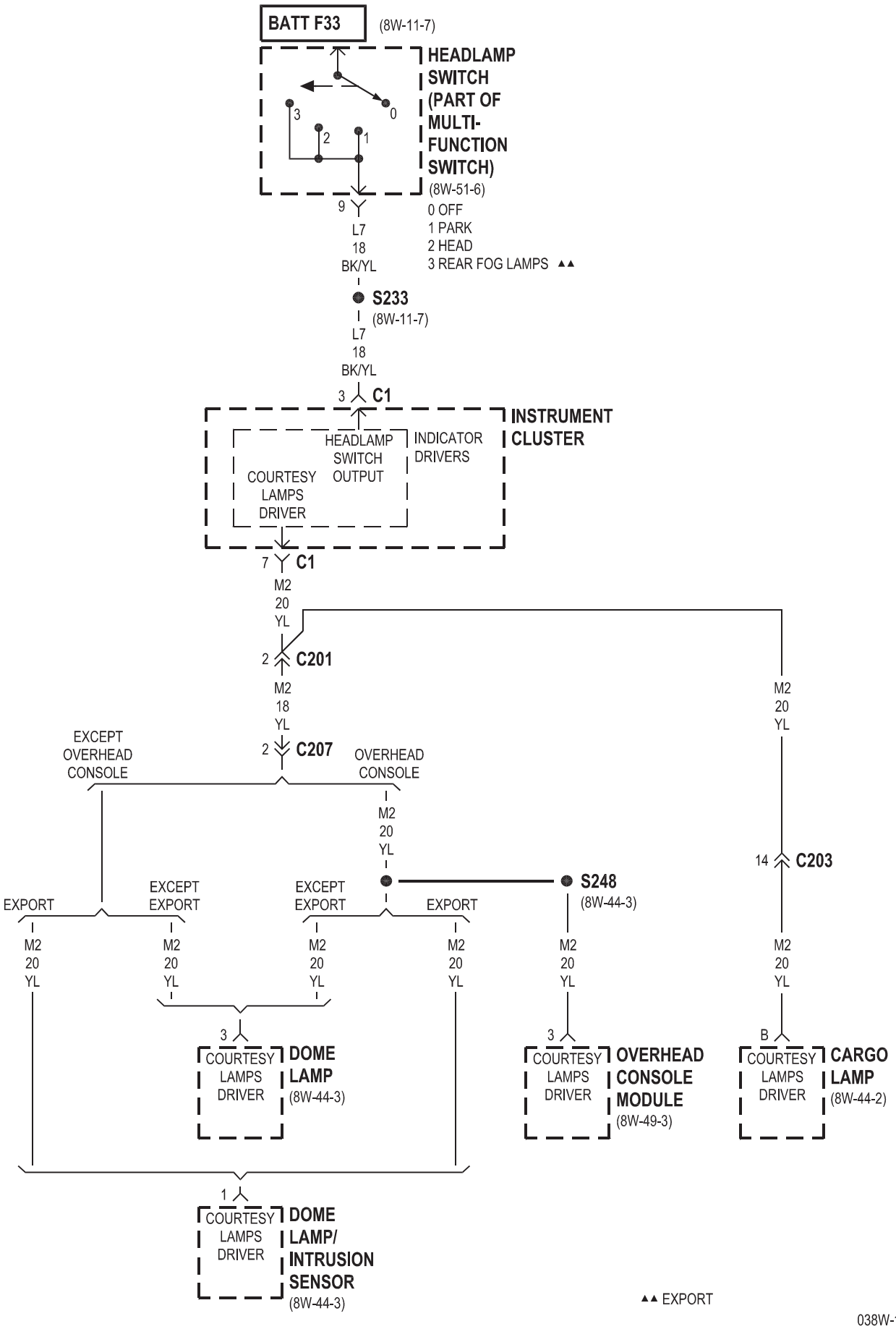
BATT F33
(8W-11-7)
HEADLAMP SWITCH (PART OF MULTI-FUNCTION SWITCH)
(8W-51-6)
0 OFF
1 PARK
2 HEAD
3 REAR FOG LAMPS ▲▲
9
L7
18
BK/YL
S233
(8W-11-7)
L7
18
BK/YL
3
C1
INSTRUMENT CLUSTER
HEADLAMP SWITCH OUTPUT
INDICATOR DRIVERS
COURTESY LAMPS DRIVER
7
C1
M2
20
YL
2
C201
M2
18
YL
2
C207
EXCEPT OVERHEAD CONSOLE
OVERHEAD CONSOLE
M2
20
YL
M2
20
YL
14
C203
S248
(8W-44-3)
EXPORT
EXCEPT EXPORT
EXCEPT EXPORT
EXPORT
M2
20
YL
M2
20
YL
M2
20
YL
M2
20
YL
M2
20
YL
M2
20
YL
3
COURTESY LAMPS DRIVER
DOME LAMP
(8W-44-3)
3
COURTESY LAMPS DRIVER
OVERHEAD CONSOLE MODULE
(8W-49-3)
B
COURTESY LAMPS DRIVER
CARGO LAMP
(8W-44-2)
1
COURTESY LAMPS DRIVER
DOME LAMP/ INTRUSION SENSOR
(8W-44-3)
▲▲ EXPORT

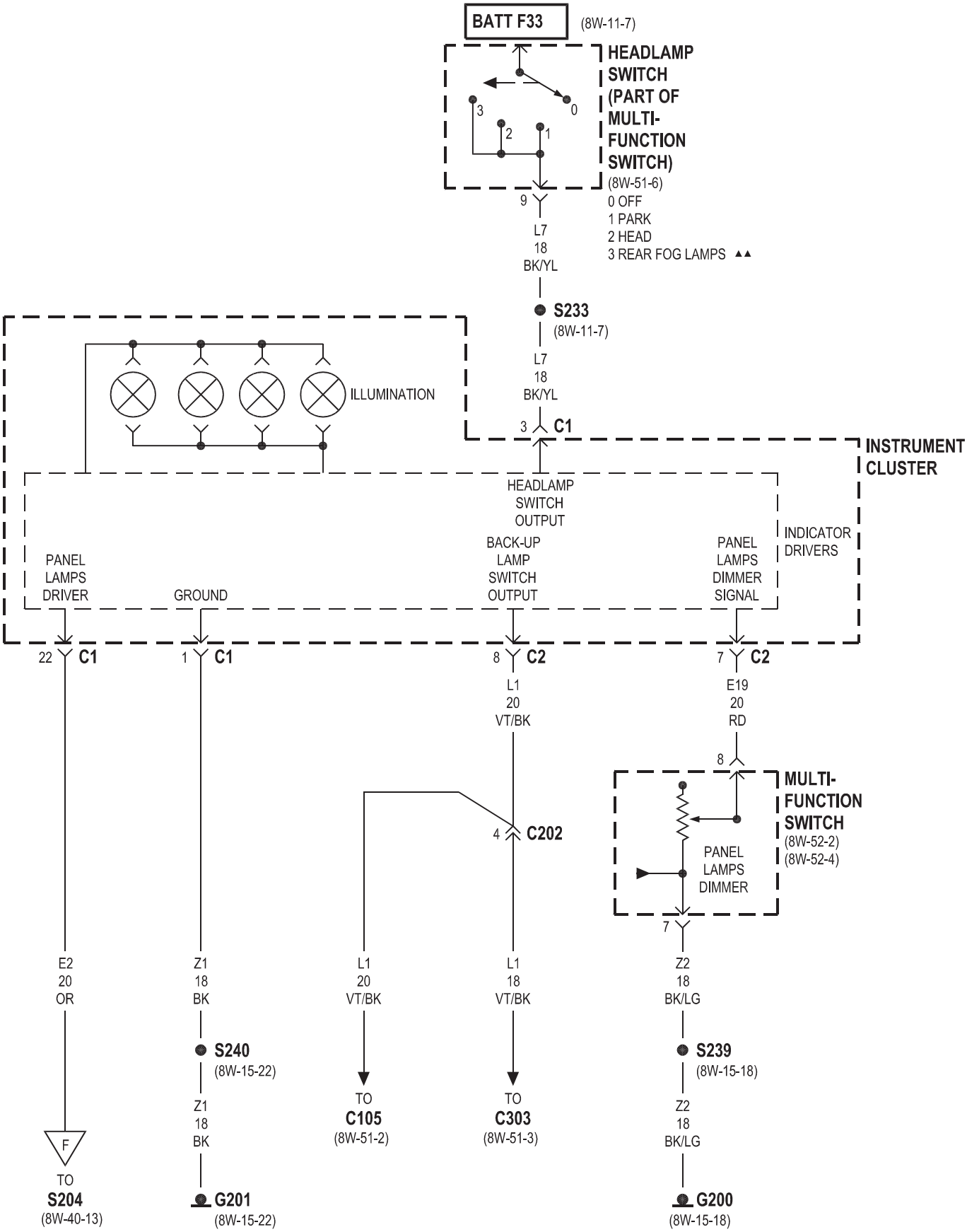
BATT F33
(8W-11-7)
HEADLAMP SWITCH (PART OF MULTI-FUNCTION SWITCH)
(8W-51-6)
0 OFF
1 PARK
2 HEAD
3 REAR FOG LAMPS ▲▲
9
L7
18
BK/YL
S233
(8W-11-7)
L7
18
BK/YL
3 C1
ILLUMINATION
INSTRUMENT CLUSTER
HEADLAMP SWITCH OUTPUT
BACK-UP LAMP SWITCH OUTPUT
PANEL LAMPS DRIVER
GROUND
PANEL LAMPS DIMMER SIGNAL
INDICATOR DRIVERS
22 C1
1 C1
8 C2
7 C2
L1
20
VT/BK
E19
20
RD
8
MULTI-FUNCTION SWITCH
(8W-52-2)
(8W-52-4)
PANEL LAMPS DIMMER
4 C202
7
E2
20
OR
Z1
18
BK
L1
20
VT/BK
L1
18
VT/BK
Z2
18
BK/LG
S240
(8W-15-22)
S239
(8W-15-18)
TO
C105
(8W-51-2)
TO
C303
(8W-51-3)
Z1
18
BK
Z2
18
BK/LG
F
TO
S204
(8W-40-13)
G201
(8W-15-22)
G200
(8W-15-18)

▲▲ EXPORT

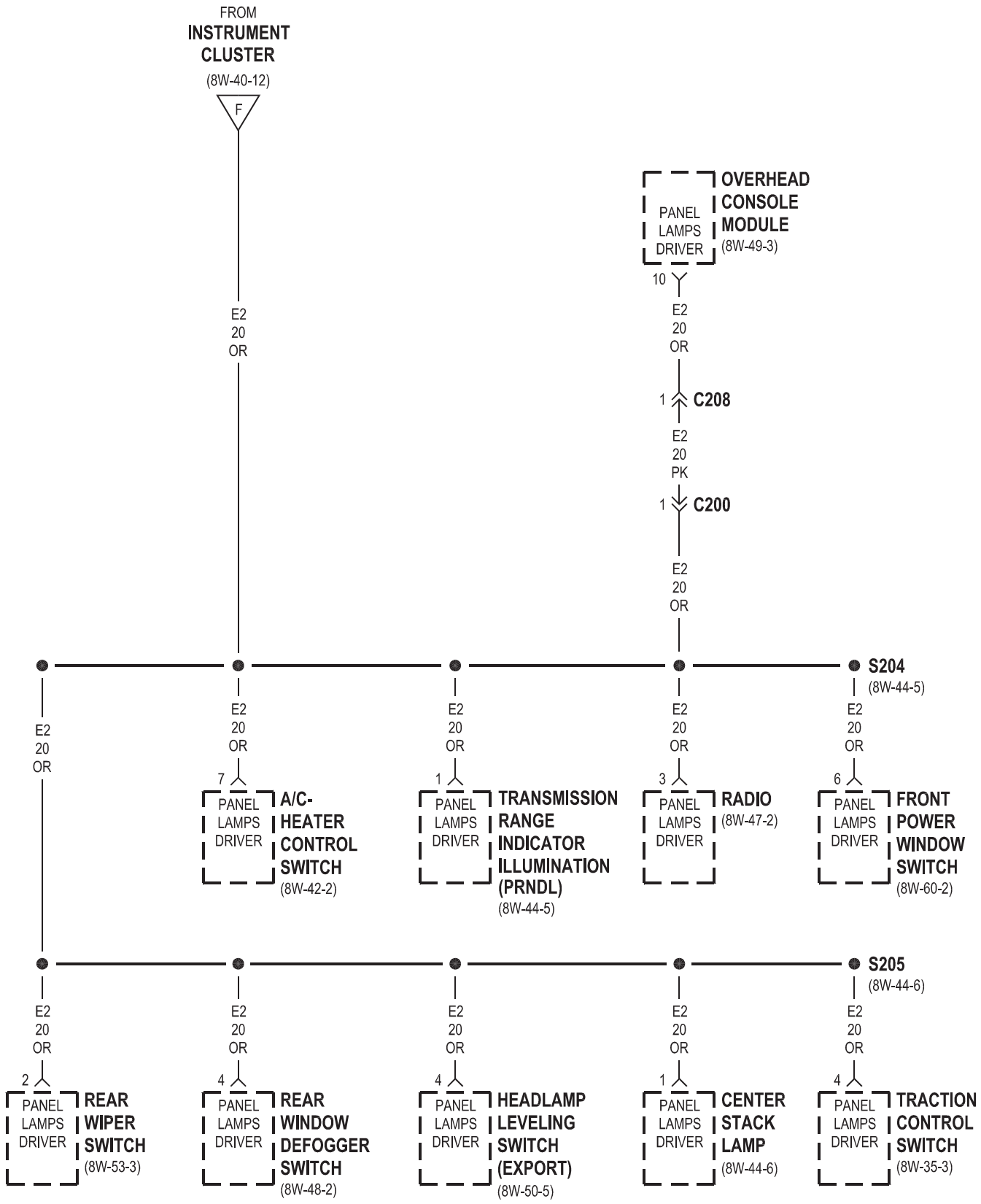
FROM
INSTRUMENT CLUSTER
(8W-40-12)
F
E2
20
OR
PANEL LAMPS DRIVER
OVERHEAD CONSOLE MODULE
(8W-49-3)
10
E2
20
OR
1
C208
E2
20
PK
1
C200
E2
20
OR
S204
(8W-44-5)
E2
20
OR
7
A/C-HEATER CONTROL SWITCH
(8W-42-2)
1
TRANSMISSION RANGE INDICATOR ILLUMINATION (PRNDL)
(8W-44-5)
3
RADIO
(8W-47-2)
6
FRONT POWER WINDOW SWITCH
(8W-60-2)
S205
(8W-44-6)
2
REAR WIPER SWITCH
(8W-53-3)
4
REAR WINDOW DEFOGGER SWITCH
(8W-48-2)
4
HEADLAMP LEVELING SWITCH (EXPORT)
(8W-50-5)
1
CENTER STACK LAMP
(8W-44-6)
4
TRACTION CONTROL SWITCH
(8W-35-3)

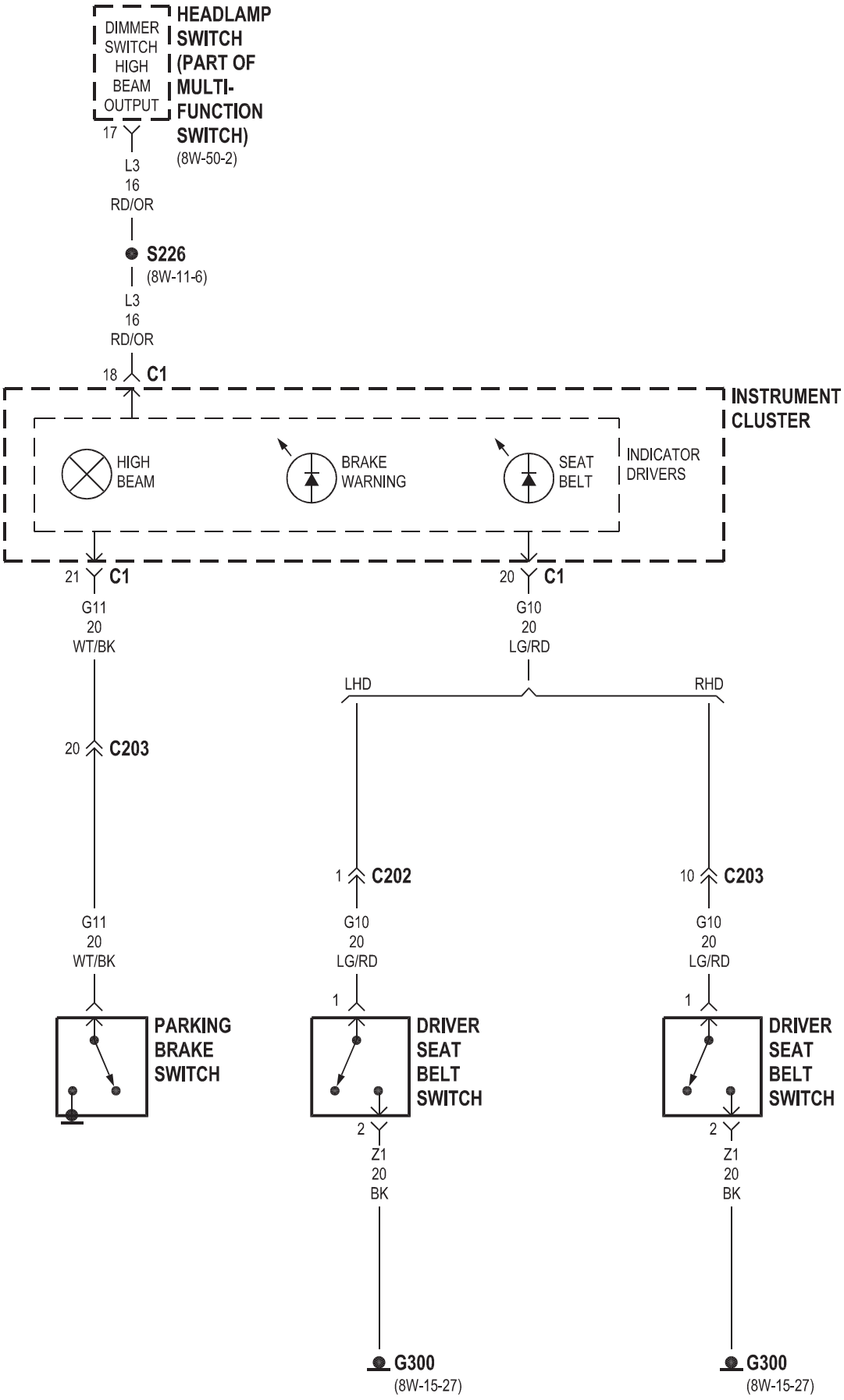
DIMMER SWITCH HIGH BEAM OUTPUT
HEADLAMP SWITCH (PART OF MULTI-FUNCTION SWITCH)
(8W-50-2)
17
L3
16
RD/OR
S226
(8W-11-6)
L3
16
RD/OR
18
C1
INSTRUMENT CLUSTER
HIGH BEAM
BRAKE WARNING
SEAT BELT
INDICATOR DRIVERS
21
C1
G11
20
WT/BK
20
C1
G10
20
LG/RD
LHD
RHD
20
C203
1
C202
10
C203
G11
20
WT/BK
G10
20
LG/RD
G10
20
LG/RD
1
1
PARKING BRAKE SWITCH
DRIVER SEAT BELT SWITCH
DRIVER SEAT BELT SWITCH
2
2
Z1
20
BK
Z1
20
BK
G300
(8W-15-27)
G300
(8W-15-27)

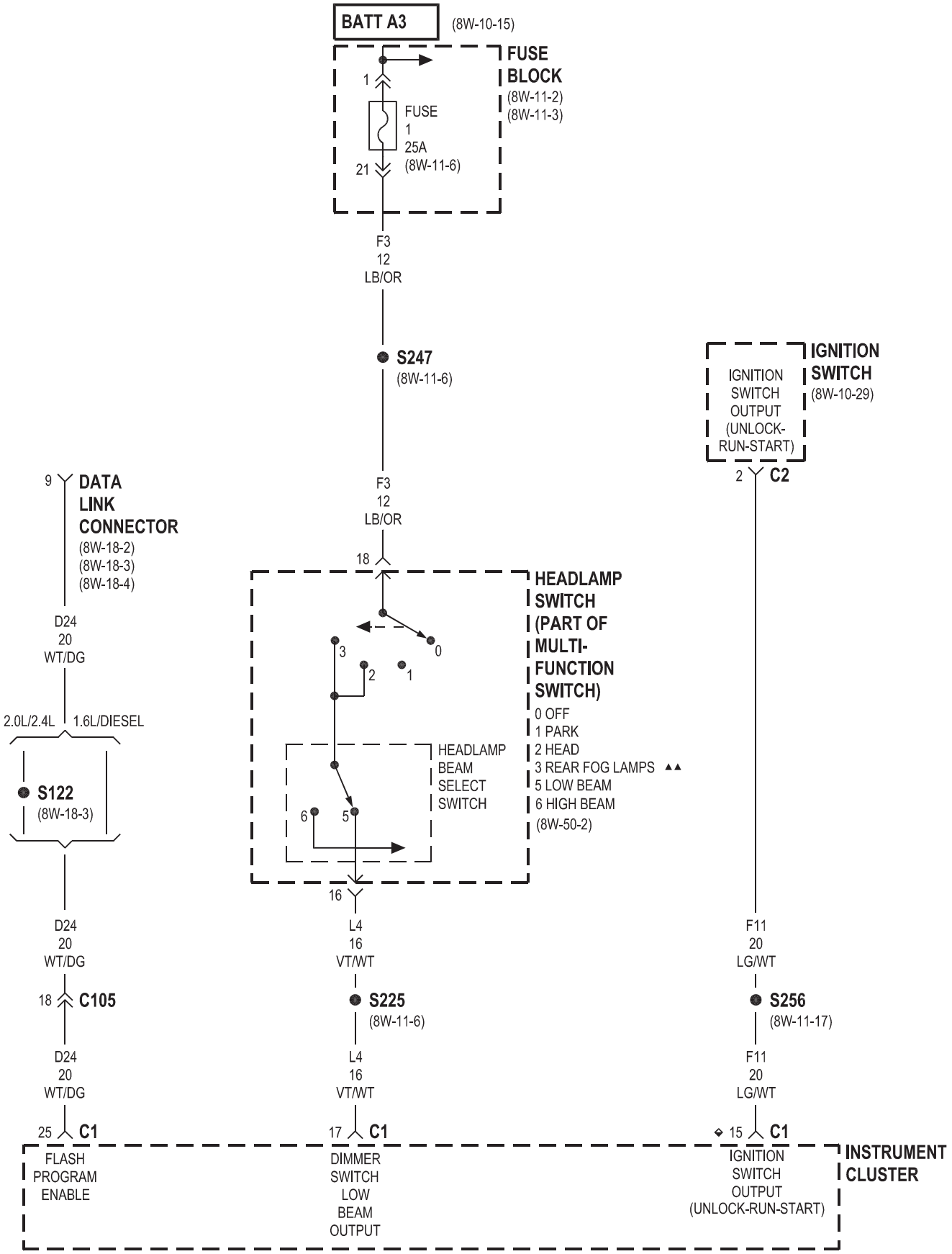
BATT A3
(8W-10-15)
FUSE BLOCK
(8W-11-2)
(8W-11-3)
1
FUSE
1
25A
(8W-11-6)
21
F3
12
LB/OR
S247
(8W-11-6)
IGNITION SWITCH
(8W-10-29)
IGNITION SWITCH OUTPUT (UNLOCK-RUN-START)
2
C2
9
DATA LINK CONNECTOR
(8W-18-2)
(8W-18-3)
(8W-18-4)
F3
12
LB/OR
18
HEADLAMP SWITCH (PART OF MULTI-FUNCTION SWITCH)
0 OFF
1 PARK
2 HEAD
3 REAR FOG LAMPS ▲▲
5 LOW BEAM
6 HIGH BEAM
(8W-50-2)
HEADLAMP BEAM SELECT SWITCH
D24
20
WT/DG
2.0L/2.4L
1.6L/DIESEL
S122
(8W-18-3)
16
D24
20
WT/DG
L4
16
VT/WT
F11
20
LG/WT
18
C105
S225
(8W-11-6)
S256
(8W-11-17)
D24
20
WT/DG
L4
16
VT/WT
F11
20
LG/WT
25
C1
17
C1
15
C1
FLASH PROGRAM ENABLE
DIMMER SWITCH LOW BEAM OUTPUT
IGNITION SWITCH OUTPUT (UNLOCK-RUN-START)
INSTRUMENT CLUSTER
◆ AUTOSTICK
▲▲ EXPORT

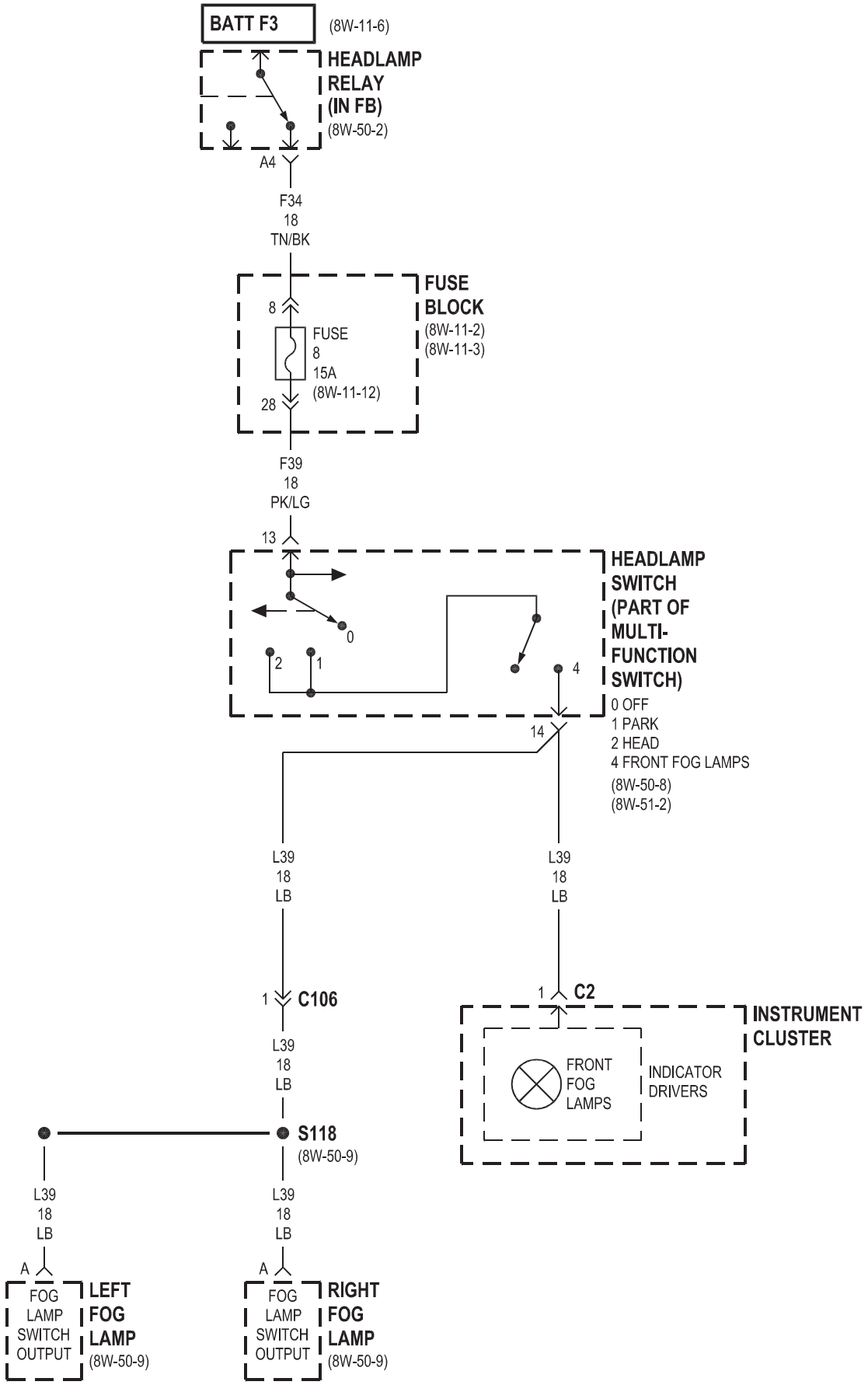
BATT F3
(8W-11-6)
HEADLAMP RELAY (IN FB)
(8W-50-2)
A4
F34
18
TN/BK
FUSE BLOCK
(8W-11-2)
(8W-11-3)
8
FUSE
8
15A
(8W-11-12)
28
F39
18
PK/LG
13
HEADLAMP SWITCH (PART OF MULTI-FUNCTION SWITCH)
0
2
1
4
14
0 OFF
1 PARK
2 HEAD
4 FRONT FOG LAMPS
(8W-50-8)
(8W-51-2)
L39
18
LB
L39
18
LB
1
C106
1
C2
INSTRUMENT CLUSTER
FRONT FOG LAMPS
INDICATOR DRIVERS
L39
18
LB
S118
(8W-50-9)
L39
18
LB
L39
18
LB
A
FOG LAMP SWITCH OUTPUT
LEFT FOG LAMP
(8W-50-9)
A
FOG LAMP SWITCH OUTPUT
RIGHT FOG LAMP
(8W-50-9)

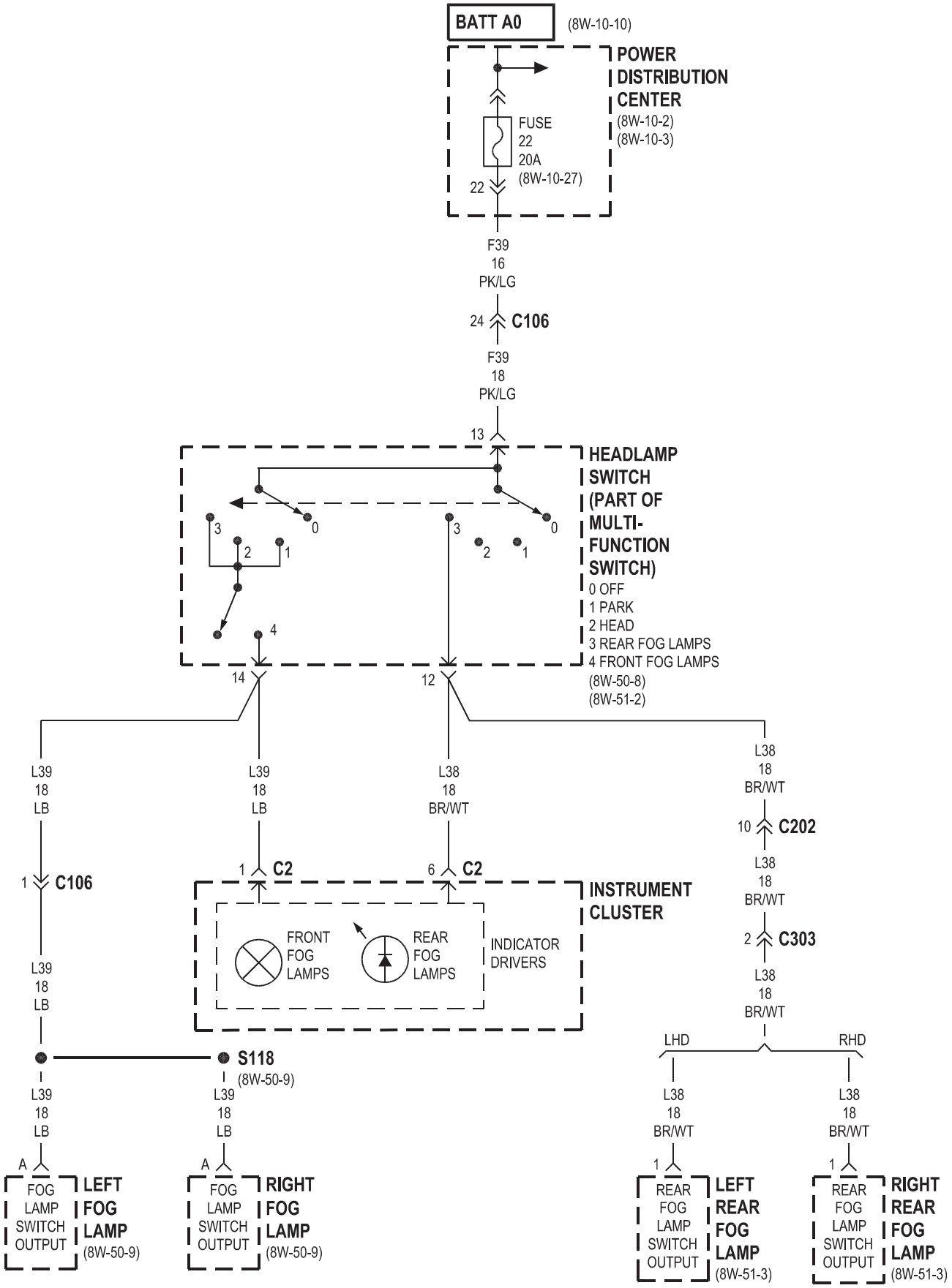
BATT A0
(8W-10-10)
POWER DISTRIBUTION CENTER
(8W-10-2)
(8W-10-3)
FUSE 22 20A
(8W-10-27)
22
F39 16 PK/LG
24
C106
F39 18 PK/LG
13
HEADLAMP SWITCH (PART OF MULTI-FUNCTION SWITCH)
0 OFF
1 PARK
2 HEAD
3 REAR FOG LAMPS
4 FRONT FOG LAMPS
(8W-50-8)
(8W-51-2)
14
12
L39 18 LB
L39 18 LB
L38 18 BR/WT
L38 18 BR/WT
10
C202
L38 18 BR/WT
2
C303
L38 18 BR/WT
1
C106
1
C2
6
C2
INSTRUMENT CLUSTER
FRONT FOG LAMPS
REAR FOG LAMPS
INDICATOR DRIVERS
L39 18 LB
S118
(8W-50-9)
L39 18 LB
L39 18 LB
LHD
RHD
L38 18 BR/WT
L38 18 BR/WT
A
A
1
1
FOG LAMP SWITCH OUTPUT
LEFT FOG LAMP
(8W-50-9)
FOG LAMP SWITCH OUTPUT
RIGHT FOG LAMP
(8W-50-9)
REAR FOG LAMP SWITCH OUTPUT
LEFT REAR FOG LAMP
(8W-51-3)
REAR FOG LAMP SWITCH OUTPUT
RIGHT REAR FOG LAMP
(8W-51-3)

8W-41 HORN/CIGAR LIGHTER/POWER OUTLET

Component	Page
Cigar Lighter	8W-41-3
Clockspring	8W-41-2
Fuse 14	8W-41-2
Fuse 20	8W-41-3
G104	8W-41-2
G201	8W-41-3
G203	8W-41-3
G301	8W-41-3
High Note Horn	8W-41-2
Horn Relay	8W-41-2
Horn Switch	8W-41-2
Ignition Switch	8W-41-3
Low Note Horn	8W-41-2
Power Distribution Center	8W-41-2, 3
Power Outlet	8W-41-3
Remote Keyless Entry Module	8W-41-2
Rear Power Outlet	8W-41-3

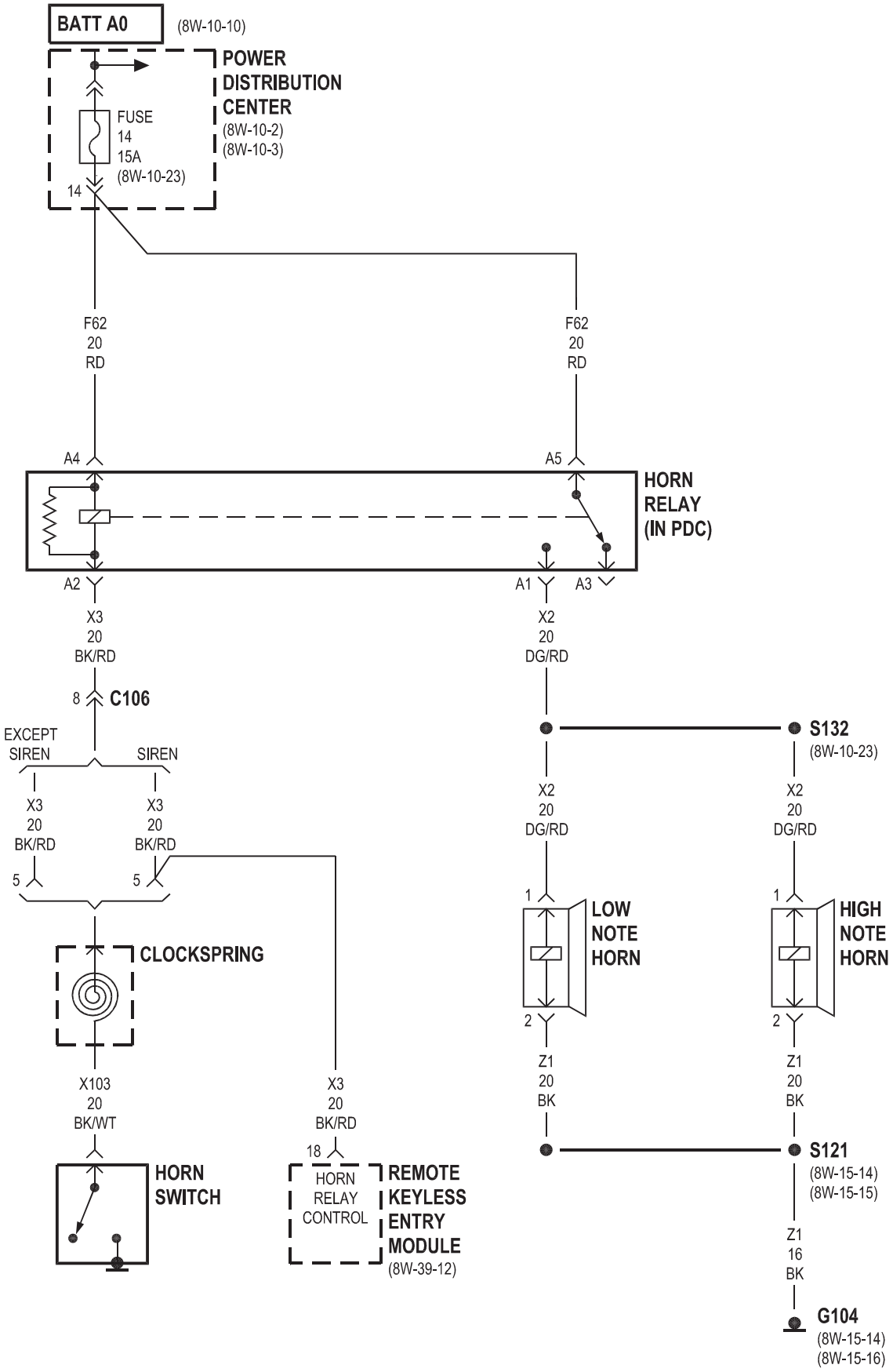
BATT A0
(8W-10-10)
POWER DISTRIBUTION CENTER
(8W-10-2)
(8W-10-3)
FUSE 14 15A
(8W-10-23)
14
F62 20 RD
F62 20 RD
A4
A5
HORN RELAY (IN PDC)
A2
A1
A3
X3 20 BK/RD
X2 20 DG/RD
8
C106
EXCEPT SIREN
SIREN
X3 20 BK/RD
X3 20 BK/RD
5
5
CLOCKSPRING
X103 20 BK/WT
HORN SWITCH
X3 20 BK/RD
18
HORN RELAY CONTROL
REMOTE KEYLESS ENTRY MODULE
(8W-39-12)
S132
(8W-10-23)
X2 20 DG/RD
X2 20 DG/RD
1
2
LOW NOTE HORN
1
2
HIGH NOTE HORN
Z1 20 BK
Z1 20 BK
S121
(8W-15-14)
(8W-15-15)
Z1 16 BK
G104
(8W-15-14)
(8W-15-16)

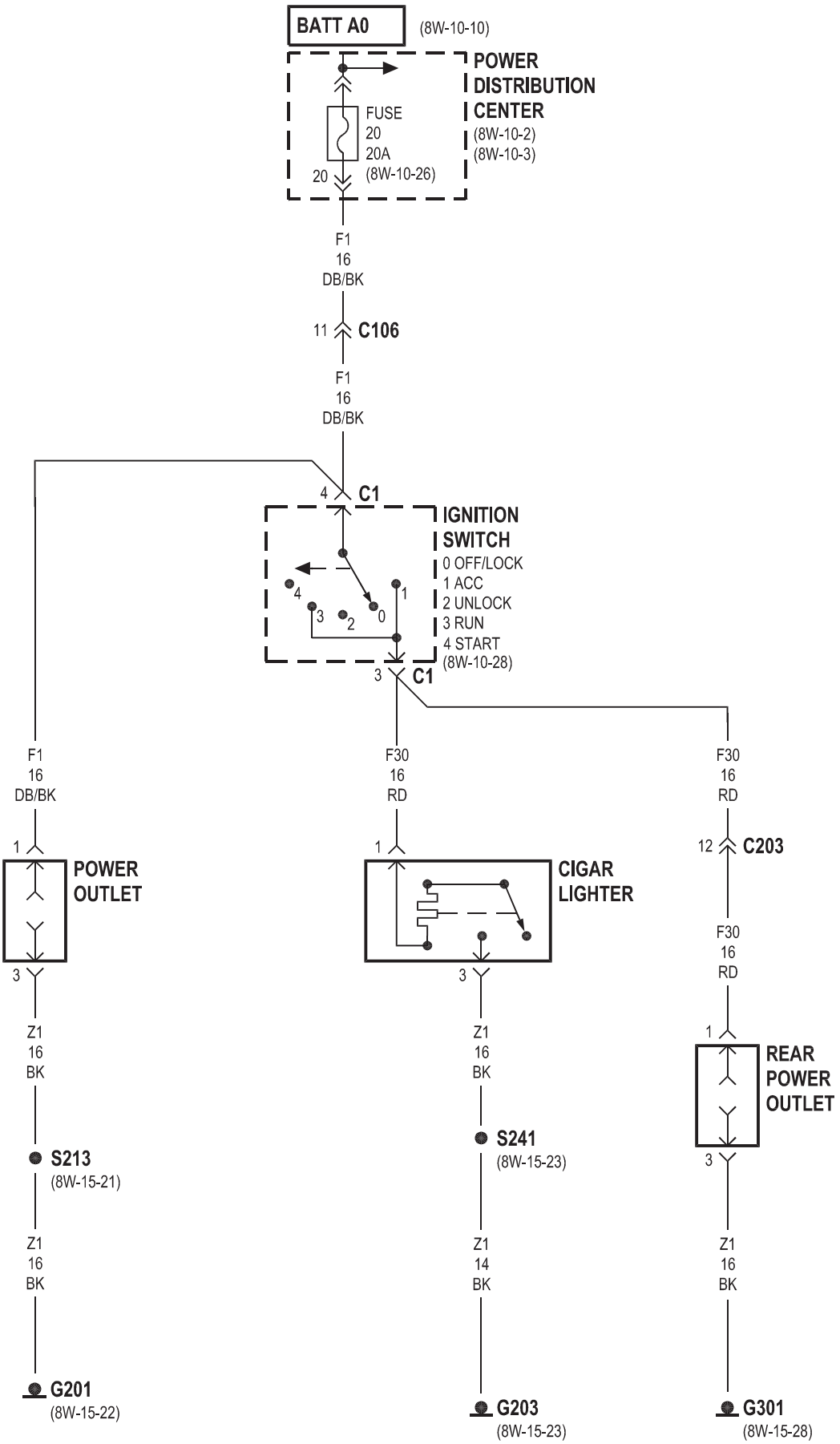
BATT A0
(8W-10-10)
POWER DISTRIBUTION CENTER
(8W-10-2)
(8W-10-3)
FUSE
20
20A
(8W-10-26)
20
F1
16
DB/BK
11
C106
F1
16
DB/BK
4
C1
IGNITION SWITCH
0 OFF/LOCK
1 ACC
2 UNLOCK
3 RUN
4 START
(8W-10-28)
3
C1
F1
16
DB/BK
F30
16
RD
F30
16
RD
1
POWER OUTLET
3
1
CIGAR LIGHTER
3
12
C203
F30
16
RD
1
REAR POWER OUTLET
3
Z1
16
BK
S213
(8W-15-21)
Z1
16
BK
G201
(8W-15-22)
Z1
16
BK
S241
(8W-15-23)
Z1
14
BK
G203
(8W-15-23)
Z1
16
BK
G301
(8W-15-28)

8W-42 AIR CONDITIONING-HEATER

Component	Page
A/C Compressor Clutch	8W-42-3, 5, 7, 9
A/C Compressor Clutch Relay	8W-42-3, 5, 7, 9
A/C High Pressure Switch	8W-42-9
A/C Low Pressure Switch	8W-42-3, 5, 7, 9
A/C Pressure Transducer	8W-42-3, 5, 7
A/C-Heater Control Switch	8W-42-2, 3, 5, 7, 9
Auto Shut Down Relay	8W-42-10, 8, 9
Battery	8W-42-8
Blower Motor	8W-42-2
Blower Motor Resistor Block	8W-42-2
Engine Control Module	8W-42-10, 9
Fuse 5	8W-42-4, 6, 10
Fuse 7	8W-42-2
Fuse 10	8W-42-2
Fuse 11	8W-42-3, 5, 7, 9
Fuse 12	8W-42-3, 4, 5, 6, 7
Fuse 13	8W-42-8, 9
Fuse Block	8W-42-2, 3, 4, 5, 6, 7
Fusible Link	8W-42-8
G103	8W-42-3, 5, 7, 9
G105	8W-42-4, 6, 8, 10
G203	8W-42-2
High Speed Radiator Fan Relay	8W-42-4, 6, 10
Instrument Cluster	8W-42-2
Low Speed Radiator Fan Relay	8W-42-10, 4, 6
Power Distribution Center	8W-42-3, 4, 5, 6, 7, 8, 9, 10
Powertrain Control Module	8W-42-3, 4, 5, 6, 7, 8
Radiator Fan Motor	8W-42-4, 6, 8, 10

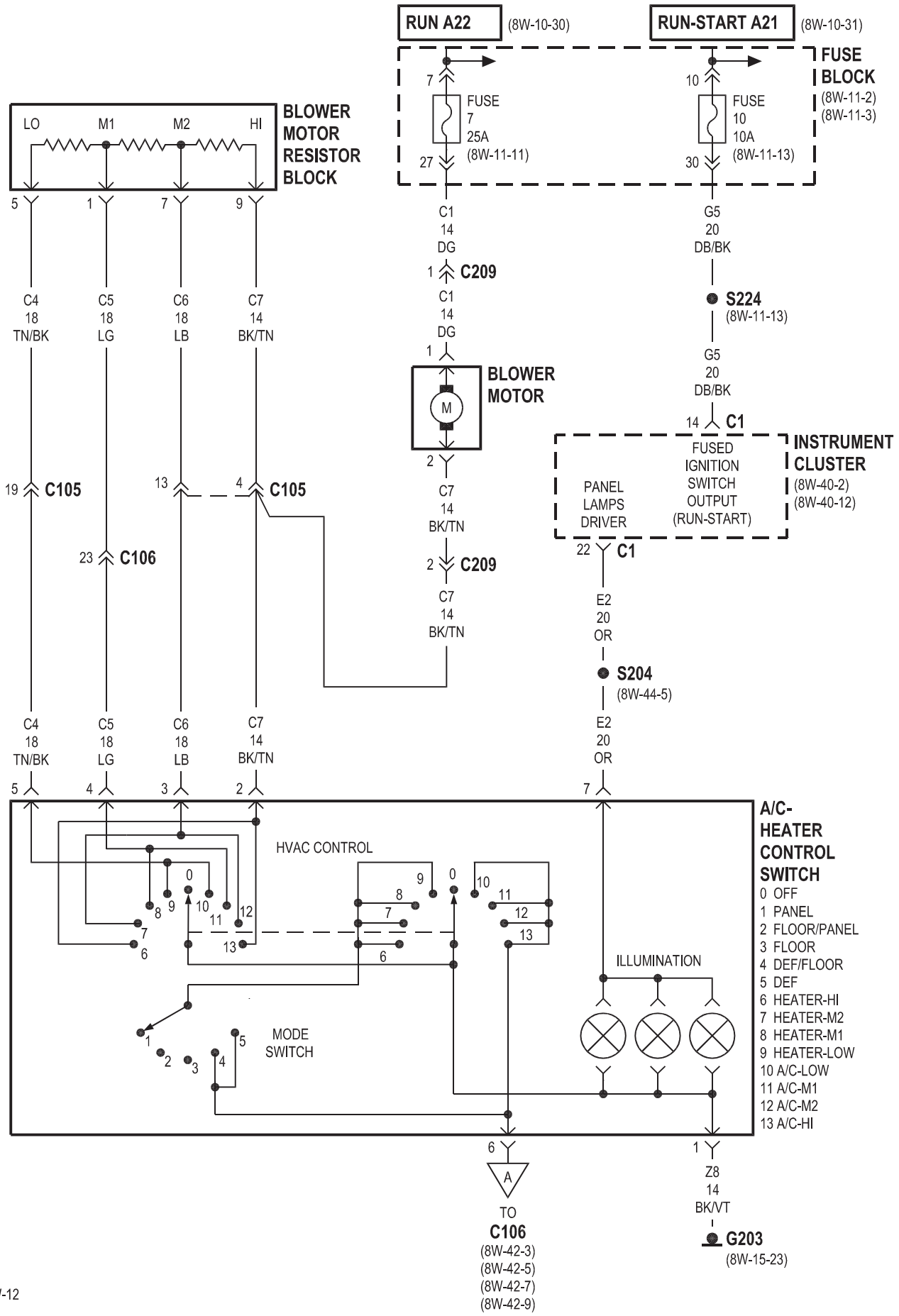
RUN A22
(8W-10-30)
RUN-START A21
(8W-10-31)
FUSE BLOCK
(8W-11-2)
(8W-11-3)
FUSE 7 25A
(8W-11-11)
FUSE 10 10A
(8W-11-13)
BLOWER MOTOR RESISTOR BLOCK
LO
M1
M2
HI
C1 14 DG
C209
C1 14 DG
BLOWER MOTOR
M
C7 14 BK/TN
C209
C7 14 BK/TN
G5 20 DB/BK
S224
(8W-11-13)
G5 20 DB/BK
C1
INSTRUMENT CLUSTER
(8W-40-2)
(8W-40-12)
FUSED IGNITION SWITCH OUTPUT (RUN-START)
PANEL LAMPS DRIVER
C1
E2 20 OR
S204
(8W-44-5)
E2 20 OR
C4 18 TN/BK
C5 18 LG
C6 18 LB
C7 14 BK/TN
C105
C106
A/C-HEATER CONTROL SWITCH
0 OFF
1 PANEL
2 FLOOR/PANEL
3 FLOOR
4 DEF/FLOOR
5 DEF
6 HEATER-HI
7 HEATER-M2
8 HEATER-M1
9 HEATER-LOW
10 A/C-LOW
11 A/C-M1
12 A/C-M2
13 A/C-HI
HVAC CONTROL
MODE SWITCH
ILLUMINATION
TO C106
(8W-42-3)
(8W-42-5)
(8W-42-7)
(8W-42-9)
Z8 14 BK/VT
G203
(8W-15-23)

1.6L

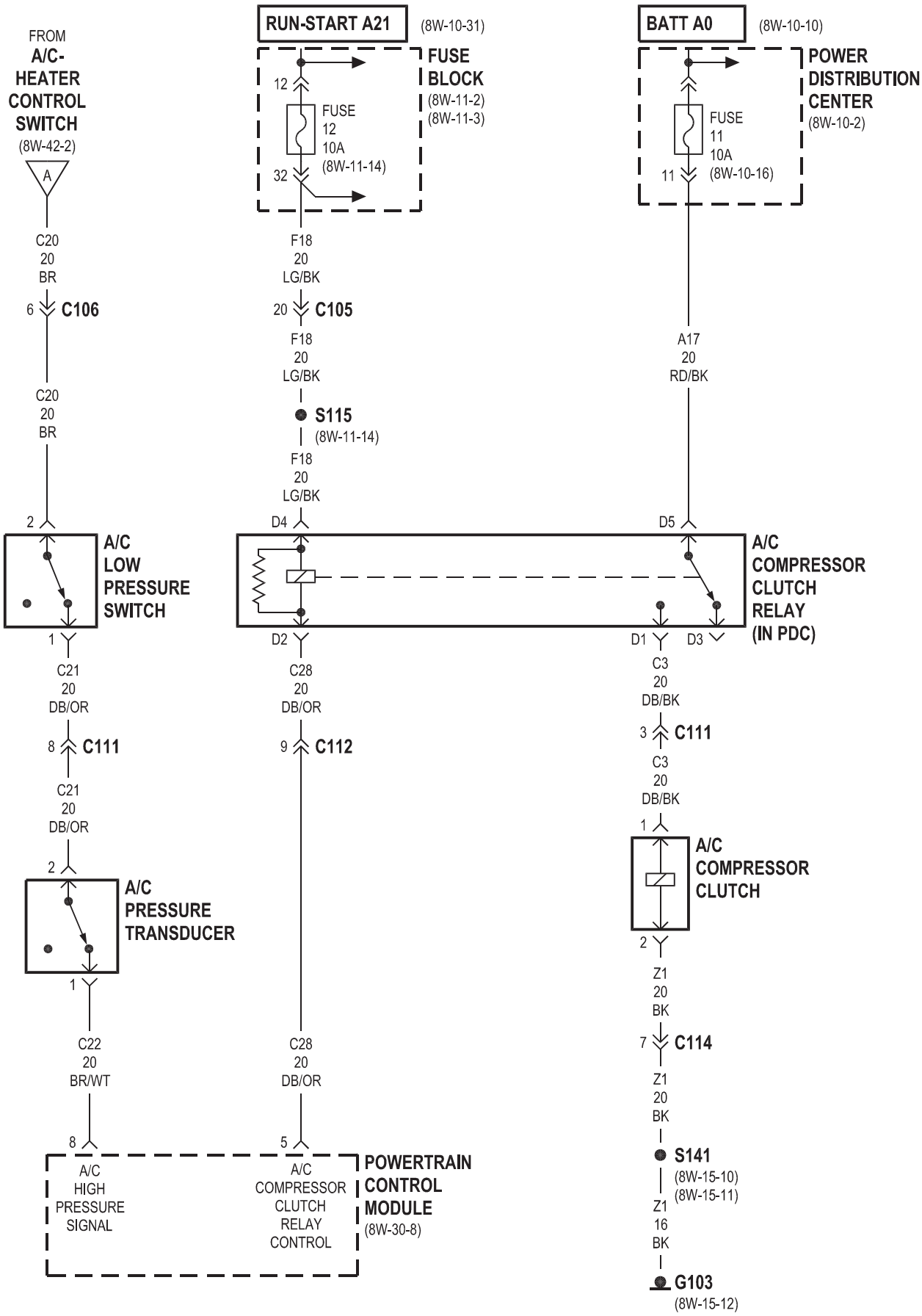
FROM
A/C-
HEATER
CONTROL
SWITCH
(8W-42-2)
A
C20
20
BR
6
C106
C20
20
BR
2
A/C
LOW
PRESSURE
SWITCH
1
C21
20
DB/OR
8
C111
C21
20
DB/OR
2
A/C
PRESSURE
TRANSDUCER
1
C22
20
BR/WT
8
RUN-START A21
(8W-10-31)
FUSE
BLOCK
(8W-11-2)
(8W-11-3)
12
FUSE
12
10A
(8W-11-14)
32
F18
20
LG/BK
20
C105
F18
20
LG/BK
S115
(8W-11-14)
F18
20
LG/BK
D4
D2
C28
20
DB/OR
9
C112
C28
20
DB/OR
5
A/C
HIGH
PRESSURE
SIGNAL
A/C
COMPRESSOR
CLUTCH
RELAY
CONTROL
POWERTRAIN
CONTROL
MODULE
(8W-30-8)
BATT A0
(8W-10-10)
POWER
DISTRIBUTION
CENTER
(8W-10-2)
FUSE
11
10A
(8W-10-16)
11
A17
20
RD/BK
D5
A/C
COMPRESSOR
CLUTCH
RELAY
(IN PDC)
D1
D3
C3
20
DB/BK
3
C111
C3
20
DB/BK
1
A/C
COMPRESSOR
CLUTCH
2
Z1
20
BK
7
C114
Z1
20
BK
S141
(8W-15-10)
(8W-15-11)
Z1
16
BK
G103
(8W-15-12)

1.6L

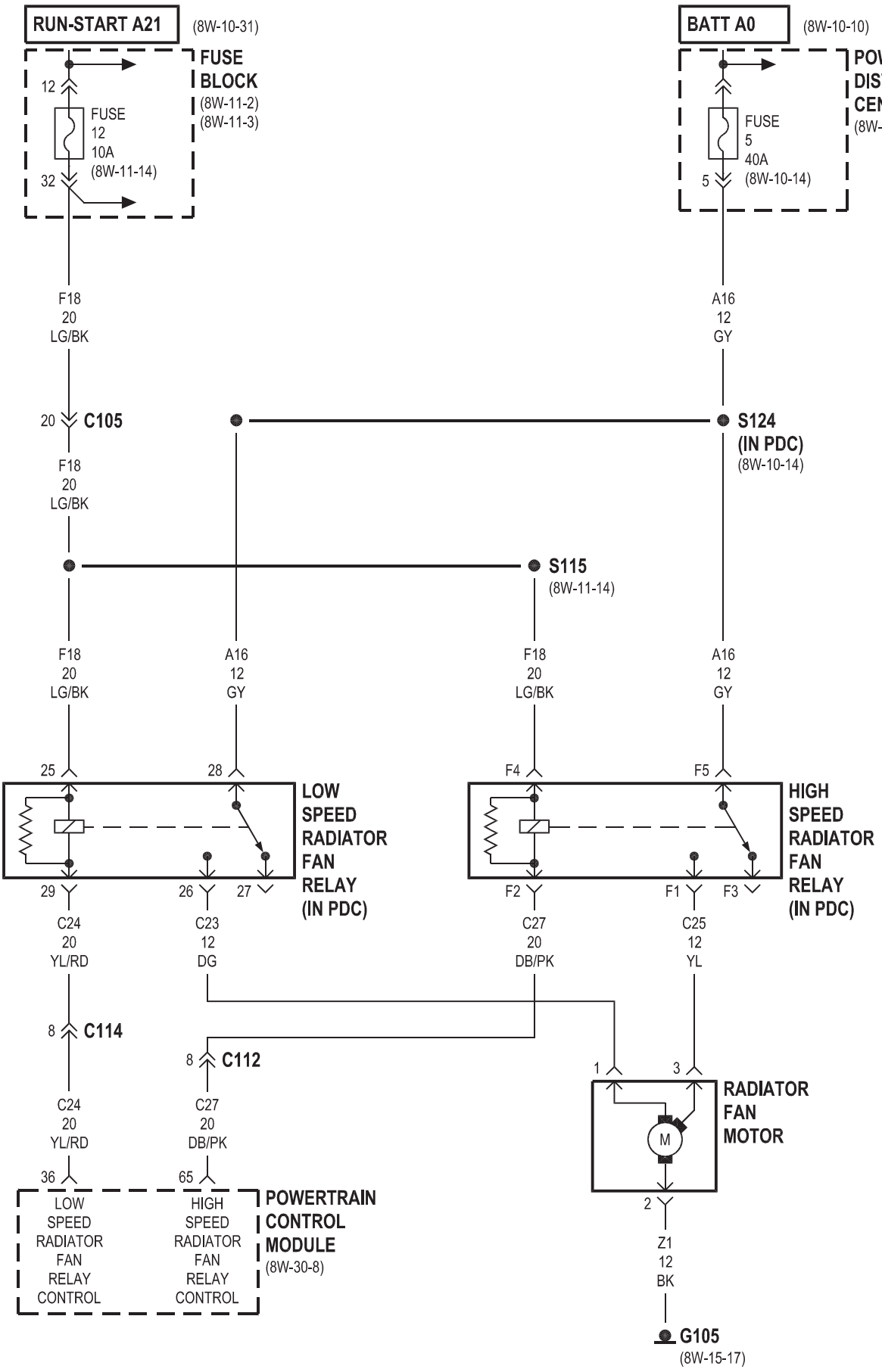
RUN-START A21
(8W-10-31)
FUSE BLOCK
(8W-11-2)
(8W-11-3)
12
FUSE 12 10A
(8W-11-14)
32
F18 20 LG/BK
20
C105
F18 20 LG/BK
BATT A0
(8W-10-10)
POWER DISTRIBUTION CENTER
(8W-10-2)
FUSE 5 40A
(8W-10-14)
5
A16 12 GY
S124
(IN PDC)
(8W-10-14)
S115
(8W-11-14)
F18 20 LG/BK
A16 12 GY
F18 20 LG/BK
A16 12 GY
25
28
29
26
27
LOW SPEED RADIATOR FAN RELAY (IN PDC)
F4
F5
F2
F1
F3
HIGH SPEED RADIATOR FAN RELAY (IN PDC)
C24 20 YL/RD
C23 12 DG
C27 20 DB/PK
C25 12 YL
8
C114
8
C112
1
3
RADIATOR FAN MOTOR
M
C24 20 YL/RD
C27 20 DB/PK
36
65
LOW SPEED RADIATOR FAN RELAY CONTROL
HIGH SPEED RADIATOR FAN RELAY CONTROL
POWERTRAIN CONTROL MODULE
(8W-30-8)
2
Z1 12 BK
G105
(8W-15-17)

2.0L/2.4L EXCEPT TURBO

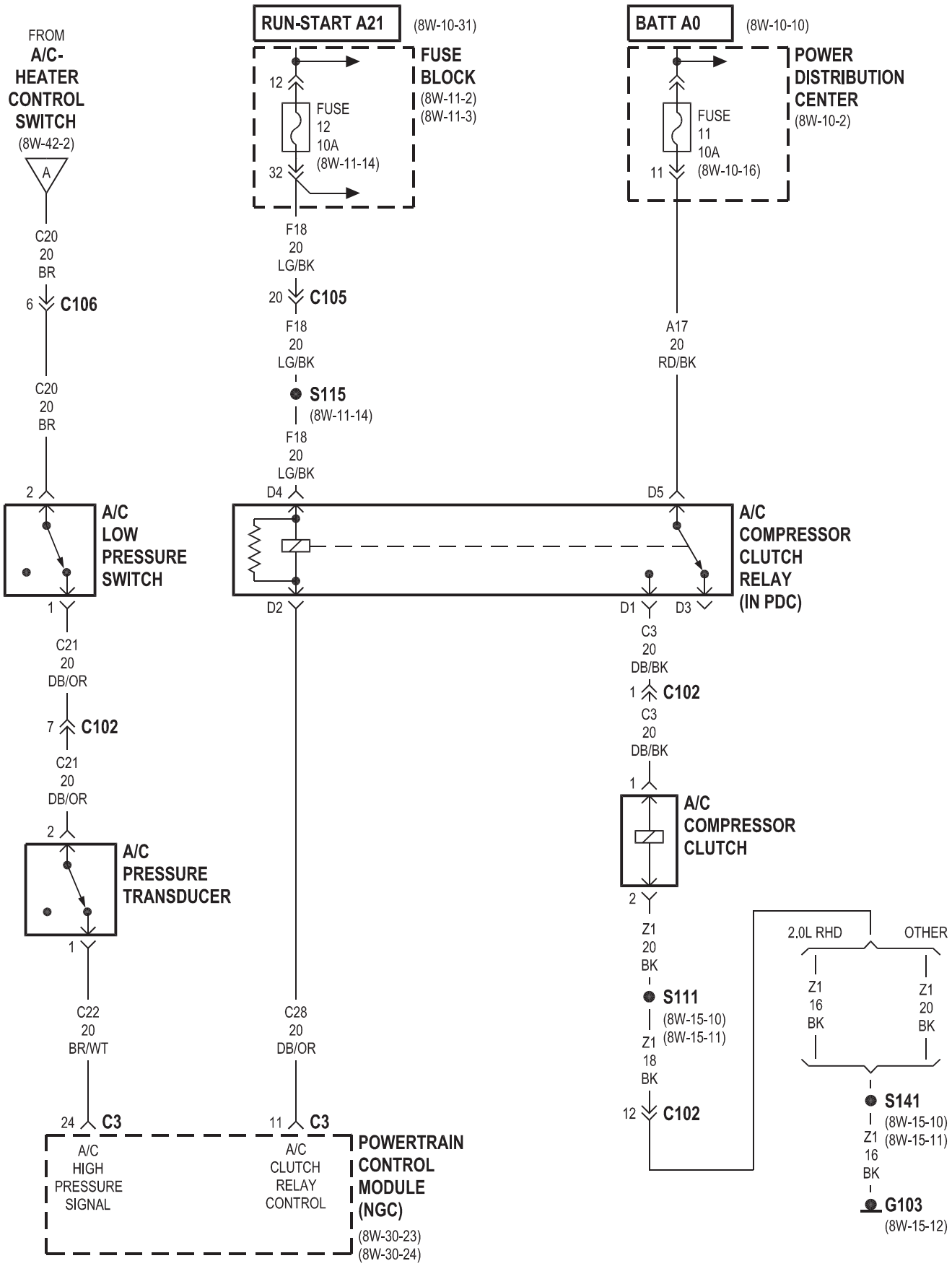

2.0L/2.4L EXCEPT TURBO

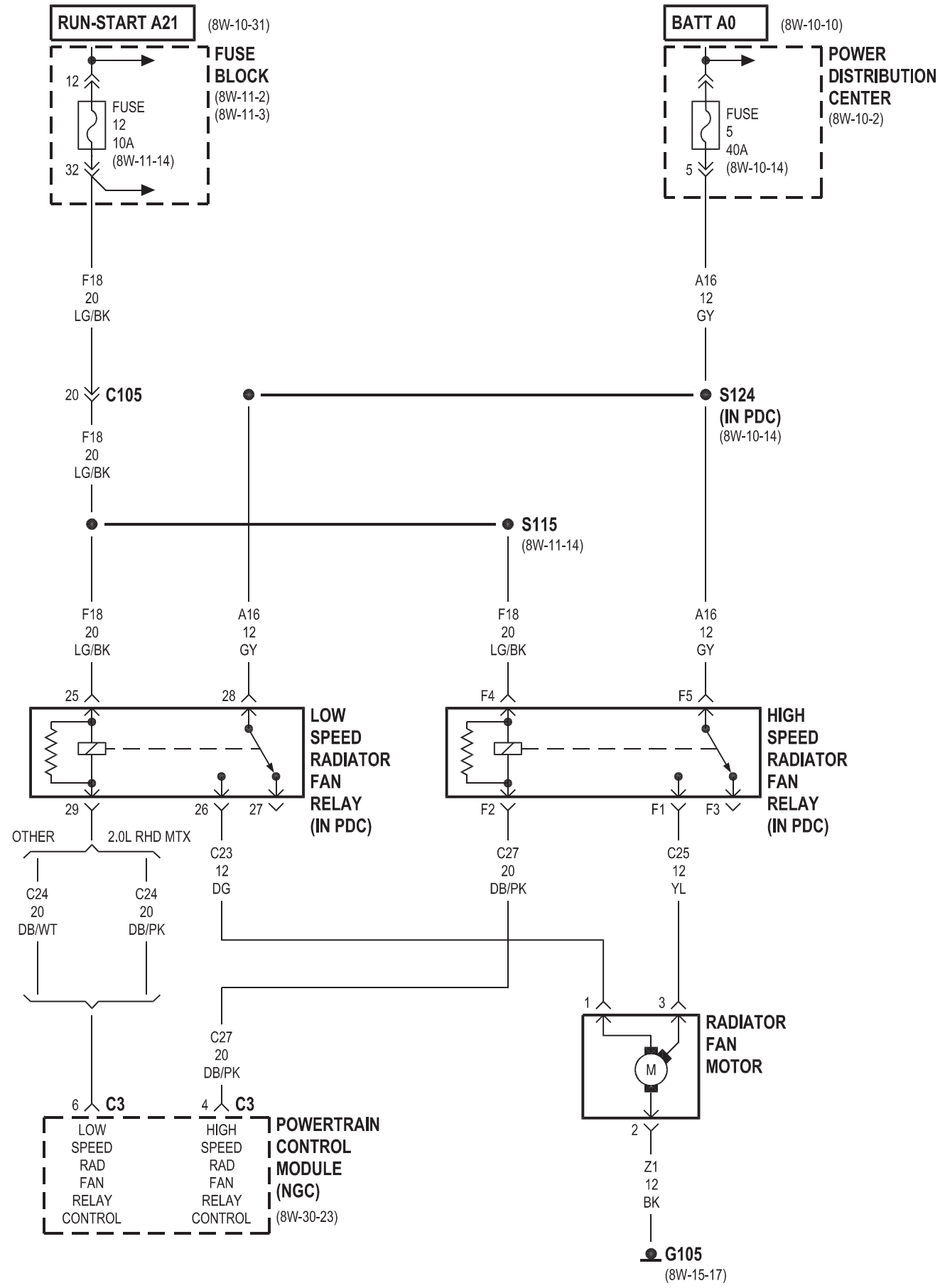

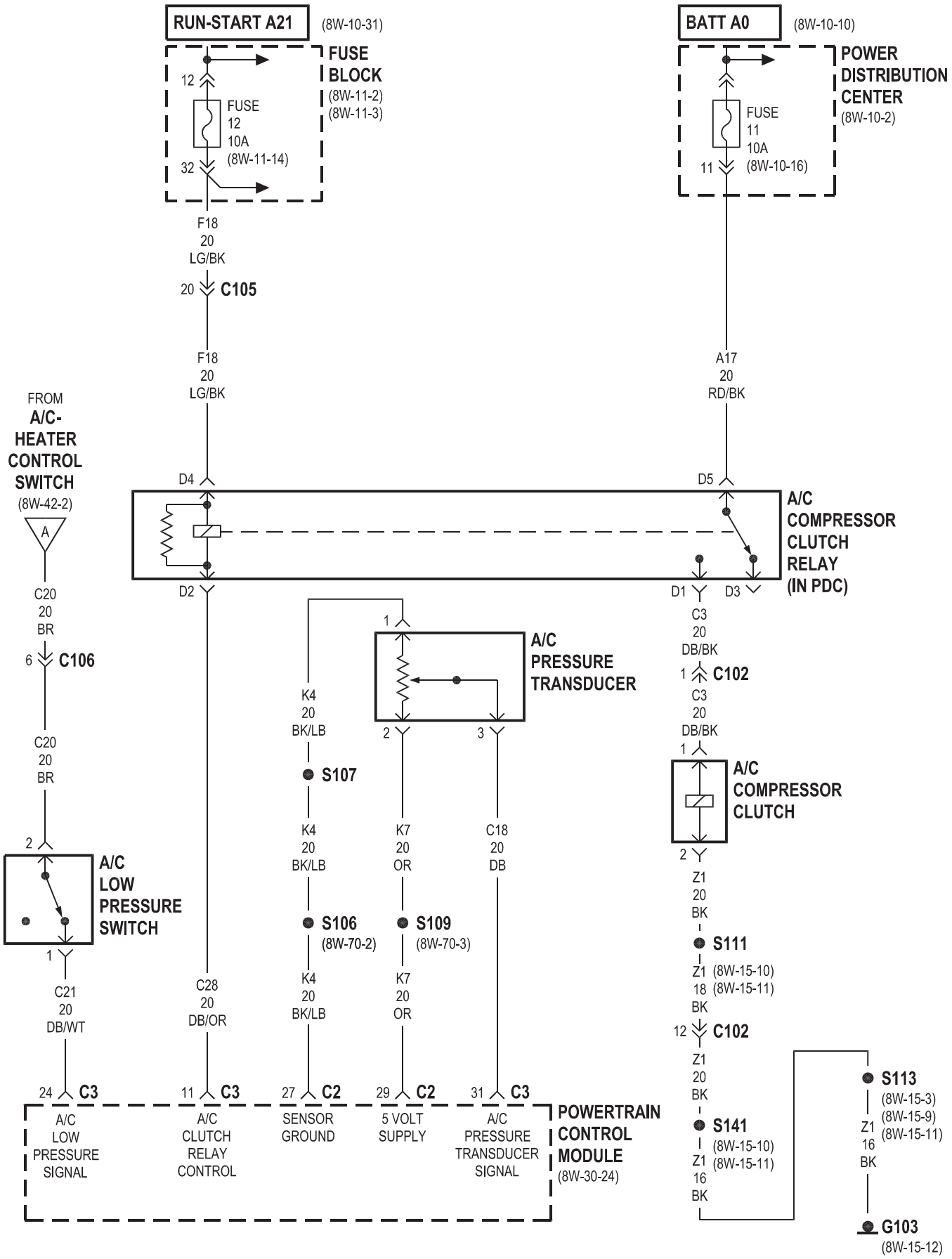
RUN-START A21
(8W-10-31)
FUSE BLOCK
(8W-11-2)
(8W-11-3)
12
FUSE 12 10A
(8W-11-14)
32
F18 20 LG/BK
20
C105
F18 20 LG/BK
BATT A0
(8W-10-10)
POWER DISTRIBUTION CENTER
(8W-10-2)
FUSE 11 10A
(8W-10-16)
11
A17 20 RD/BK
FROM A/C-HEATER CONTROL SWITCH
(8W-42-2)
A
C20 20 BR
6
C106
C20 20 BR
2
A/C LOW PRESSURE SWITCH
1
C21 20 DB/WT
D4
D2
D5
D1
D3
A/C COMPRESSOR CLUTCH RELAY (IN PDC)
C3 20 DB/BK
1
C102
C3 20 DB/BK
1
A/C COMPRESSOR CLUTCH
2
Z1 20 BK
S111
Z1 18 BK
(8W-15-10)
(8W-15-11)
12
C102
Z1 20 BK
S141
(8W-15-10)
(8W-15-11)
Z1 16 BK
S113
(8W-15-3)
(8W-15-9)
(8W-15-11)
Z1 16 BK
G103
(8W-15-12)
1
A/C PRESSURE TRANSDUCER
2
3
K4 20 BK/LB
S107
K4 20 BK/LB
S106
(8W-70-2)
K4 20 BK/LB
K7 20 OR
S109
(8W-70-3)
K7 20 OR
C18 20 DB
C28 20 DB/OR
24
C3
A/C LOW PRESSURE SIGNAL
11
C3
A/C CLUTCH RELAY CONTROL
27
C2
SENSOR GROUND
29
C2
5 VOLT SUPPLY
31
C3
A/C PRESSURE TRANSDUCER SIGNAL
POWERTRAIN CONTROL MODULE
(8W-30-24)

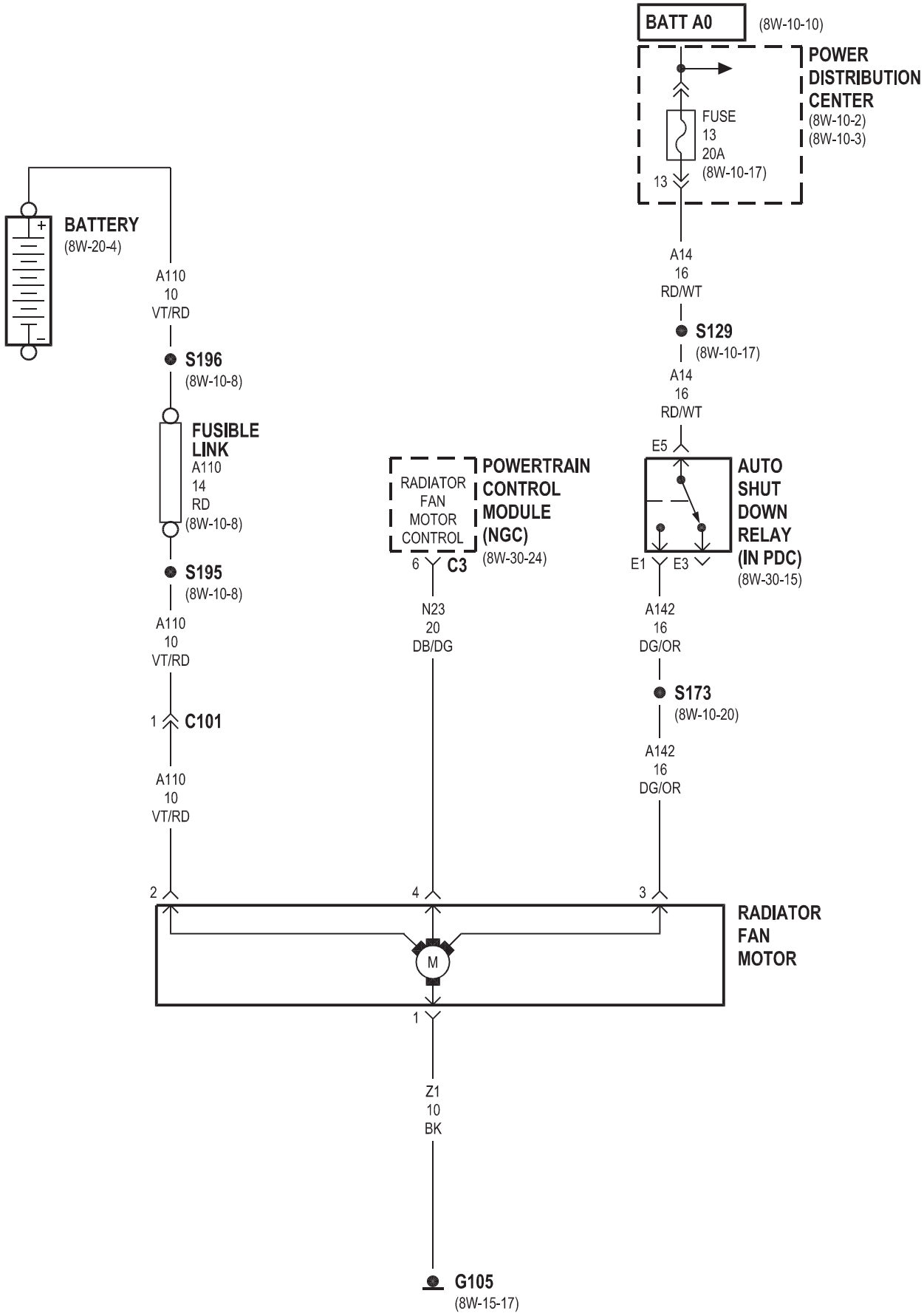
BATT A0
(8W-10-10)
POWER DISTRIBUTION CENTER
(8W-10-2)
(8W-10-3)
FUSE
13
20A
(8W-10-17)
13
BATTERY
(8W-20-4)
A110
10
VT/RD
S196
(8W-10-8)
FUSIBLE LINK
A110
14
RD
(8W-10-8)
S195
(8W-10-8)
A110
10
VT/RD
1
C101
A110
10
VT/RD
A14
16
RD/WT
S129
(8W-10-17)
A14
16
RD/WT
E5
AUTO SHUT DOWN RELAY (IN PDC)
(8W-30-15)
E1
E3
A142
16
DG/OR
S173
(8W-10-20)
A142
16
DG/OR
RADIATOR FAN MOTOR CONTROL
POWERTRAIN CONTROL MODULE (NGC)
(8W-30-24)
6
C3
N23
20
DB/DG
2
4
3
M
RADIATOR FAN MOTOR
1
Z1
10
BK
G105
(8W-15-17)

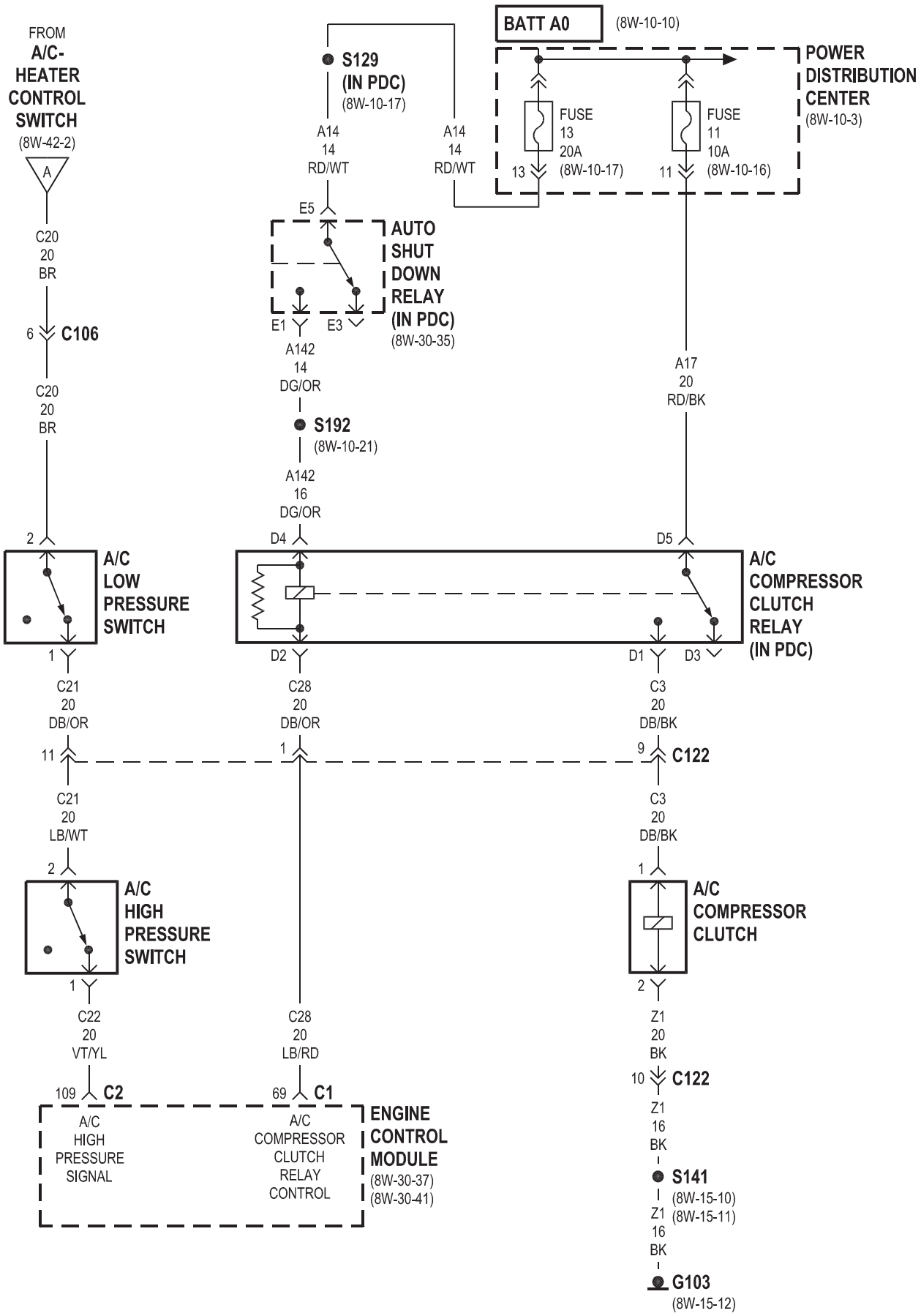
FROM
A/C-
HEATER
CONTROL
SWITCH
(8W-42-2)
A
C20
20
BR
6
C106
C20
20
BR
2
A/C
LOW
PRESSURE
SWITCH
1
C21
20
DB/OR
11
C21
20
LB/WT
2
A/C
HIGH
PRESSURE
SWITCH
1
C22
20
VT/YL
109
C2
S129
(IN PDC)
(8W-10-17)
A14
14
RD/WT
E5
AUTO
SHUT
DOWN
RELAY
(IN PDC)
(8W-30-35)
E1
E3
A142
14
DG/OR
S192
(8W-10-21)
A142
16
DG/OR
D4
D2
C28
20
DB/OR
1
C28
20
LB/RD
69
C1
A/C
HIGH
PRESSURE
SIGNAL
A/C
COMPRESSOR
CLUTCH
RELAY
CONTROL
ENGINE
CONTROL
MODULE
(8W-30-37)
(8W-30-41)
A14
14
RD/WT
BATT A0
(8W-10-10)
POWER
DISTRIBUTION
CENTER
(8W-10-3)
FUSE
13
20A
(8W-10-17)
13
FUSE
11
10A
(8W-10-16)
11
A17
20
RD/BK
D5
A/C
COMPRESSOR
CLUTCH
RELAY
(IN PDC)
D1
D3
C3
20
DB/BK
9
C122
C3
20
DB/BK
1
A/C
COMPRESSOR
CLUTCH
2
Z1
20
BK
10
C122
Z1
16
BK
S141
(8W-15-10)
(8W-15-11)
Z1
16
BK
G103
(8W-15-12)

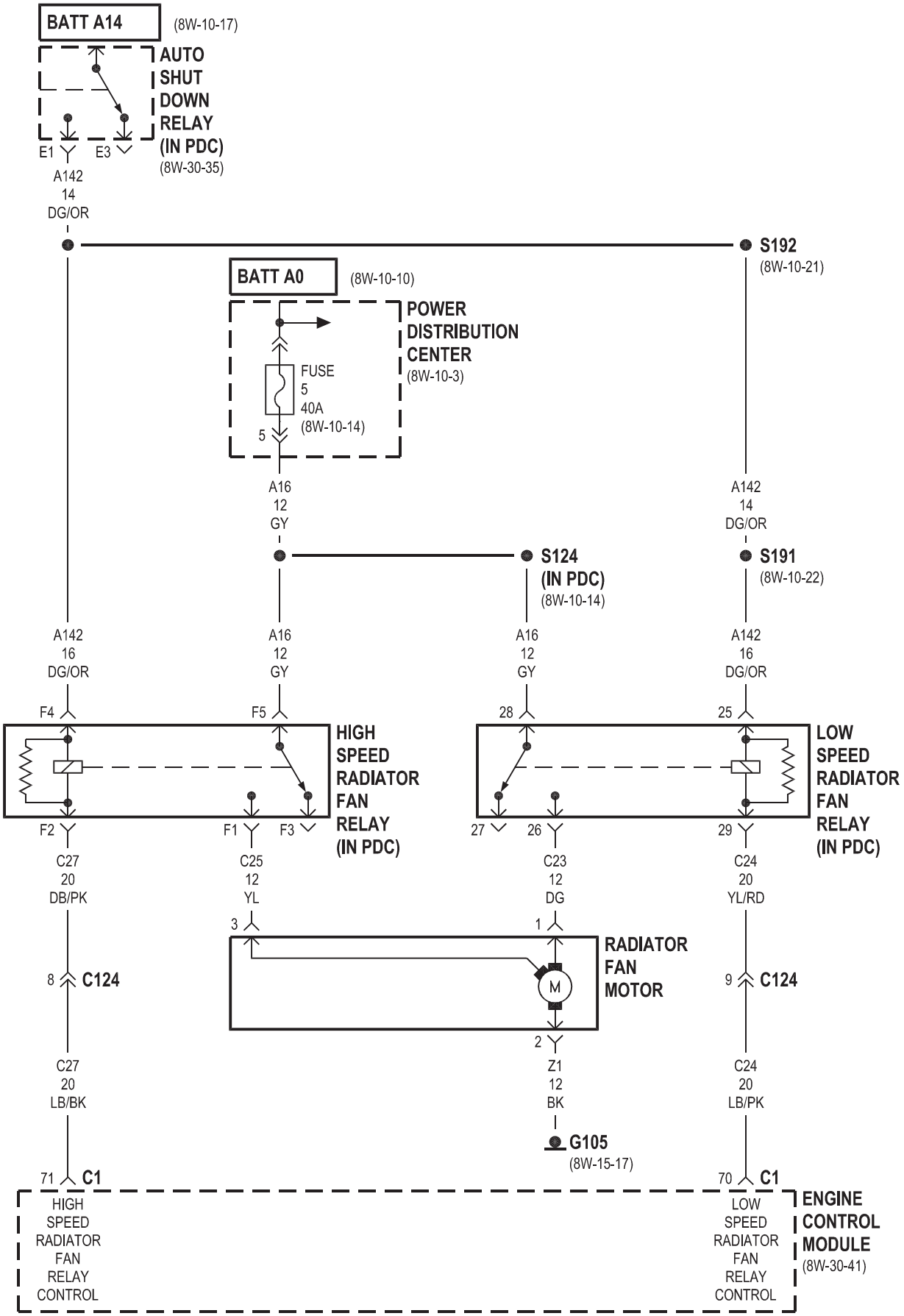
BATT A14
(8W-10-17)
AUTO SHUT DOWN RELAY (IN PDC)
(8W-30-35)
E1
E3
A142
14
DG/OR
S192
(8W-10-21)
BATT A0
(8W-10-10)
POWER DISTRIBUTION CENTER
(8W-10-3)
FUSE
5
40A
(8W-10-14)
5
A16
12
GY
A142
14
DG/OR
S124
(IN PDC)
(8W-10-14)
S191
(8W-10-22)
A142
16
DG/OR
A16
12
GY
A16
12
GY
A142
16
DG/OR
F4
F5
28
25
HIGH SPEED RADIATOR FAN RELAY (IN PDC)
LOW SPEED RADIATOR FAN RELAY (IN PDC)
F2
F1
F3
27
26
29
C27
20
DB/PK
C25
12
YL
C23
12
DG
C24
20
YL/RD
3
1
RADIATOR FAN MOTOR
M
8
C124
9
C124
2
C27
20
LB/BK
Z1
12
BK
C24
20
LB/PK
G105
(8W-15-17)
71
C1
70
C1
HIGH SPEED RADIATOR FAN RELAY CONTROL
LOW SPEED RADIATOR FAN RELAY CONTROL
ENGINE CONTROL MODULE
(8W-30-41)

8W-43 OCCUPANT RESTRAINT SYSTEM

Component	Page
Airbag Control Module	8W-43-2, 3, 4, 5, 6
Clockspring	8W-43-4, 5
Data Link Connector	8W-43-2, 3
Driver Airbag Squib 1	8W-43-4, 5
Driver Seat Airbag Squib	8W-43-6
Driver Seat Belt Tensioner	8W-43-4, 5
Driver Side Impact Sensor 1	8W-43-6
Fuse 5	8W-43-2, 3
Fuse 9	8W-43-2, 3
Fuse Block	8W-43-2, 3
G202	8W-43-2, 3
Instrument Cluster	8W-43-2, 3
Passenger Airbag Squib 1	8W-43-4, 5
Passenger Seat Airbag Squib	8W-43-6
Passenger Seat Belt Tensioner	8W-43-4, 5
Passenger Side Impact Sensor 1	8W-43-6

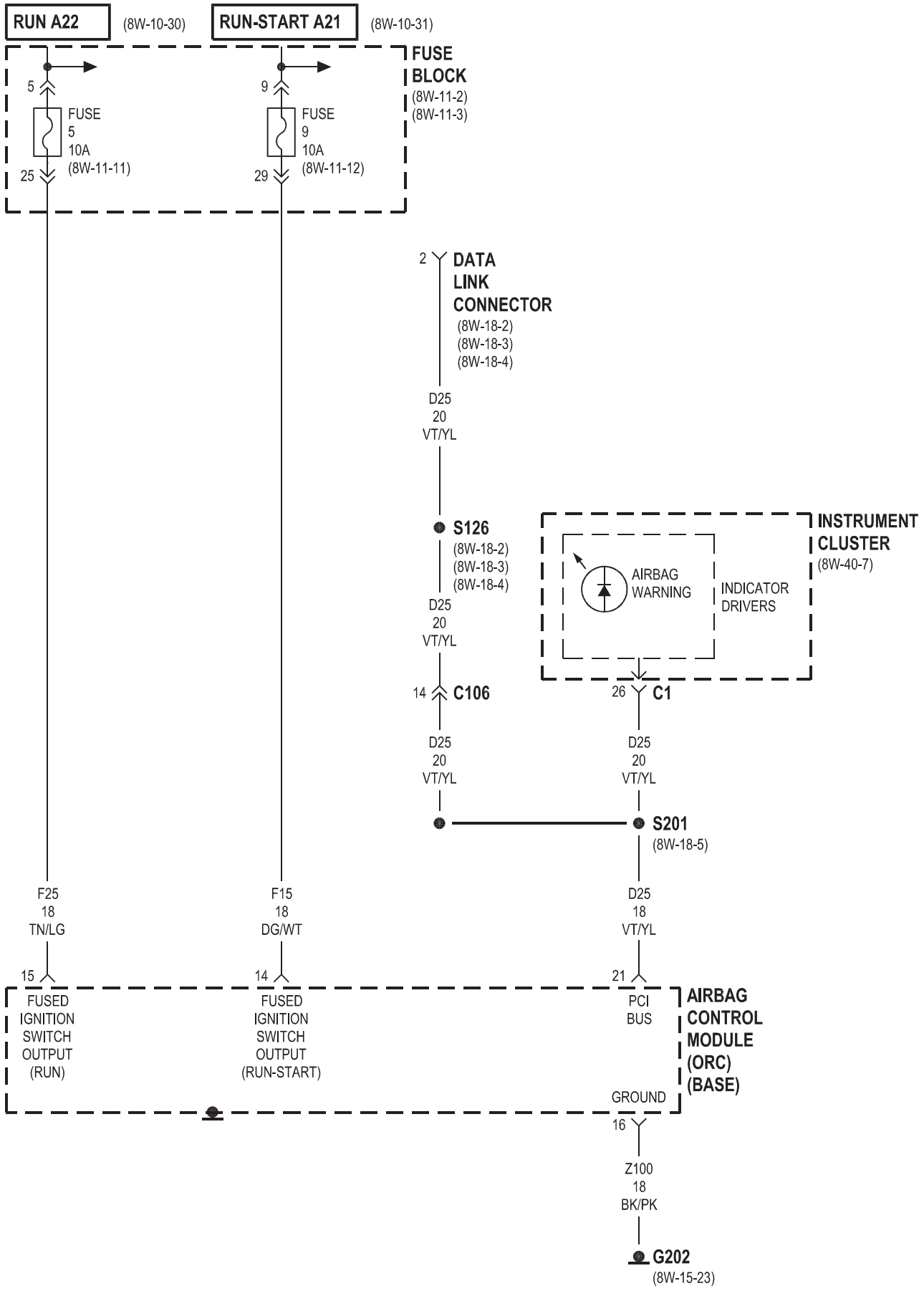
RUN A22
(8W-10-30)
RUN-START A21
(8W-10-31)
FUSE BLOCK
(8W-11-2)
(8W-11-3)
5
FUSE 5 10A (8W-11-11)
25
9
FUSE 9 10A (8W-11-12)
29
2
DATA LINK CONNECTOR
(8W-18-2)
(8W-18-3)
(8W-18-4)
D25 20 VT/YL
S126
(8W-18-2)
(8W-18-3)
(8W-18-4)
D25 20 VT/YL
INSTRUMENT CLUSTER
(8W-40-7)
AIRBAG WARNING
INDICATOR DRIVERS
14
C106
26
C1
D25 20 VT/YL
D25 20 VT/YL
S201
(8W-18-5)
F25 18 TN/LG
F15 18 DG/WT
D25 18 VT/YL
15
14
21
FUSED IGNITION SWITCH OUTPUT (RUN)
FUSED IGNITION SWITCH OUTPUT (RUN-START)
PCI BUS
AIRBAG CONTROL MODULE (ORC) (BASE)
GROUND
16
Z100 18 BK/PK
G202
(8W-15-23)

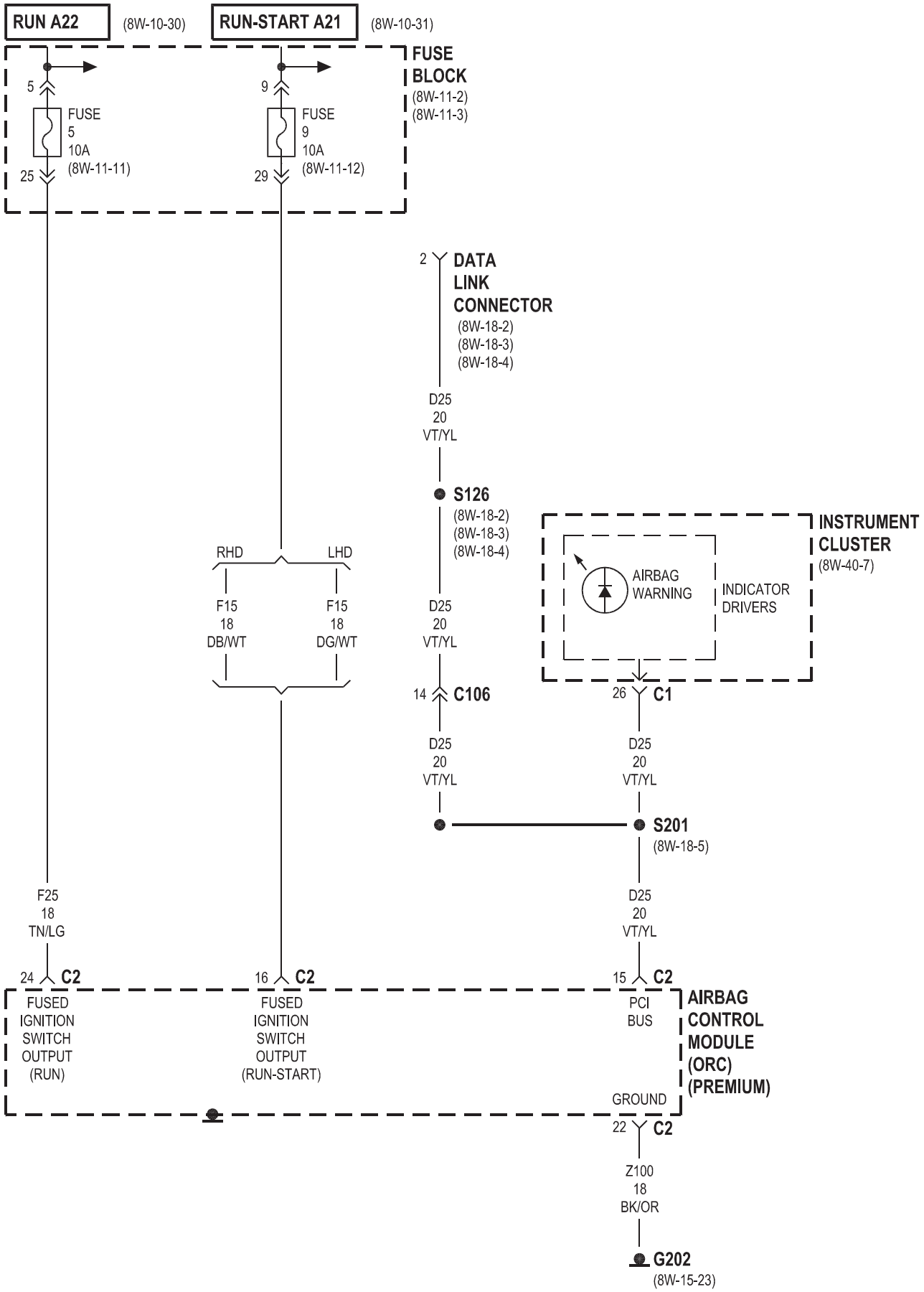
RUN A22
(8W-10-30)
RUN-START A21
(8W-10-31)
FUSE BLOCK
(8W-11-2)
(8W-11-3)
5
FUSE 5 10A
(8W-11-11)
25
9
FUSE 9 10A
(8W-11-12)
29
2
DATA LINK CONNECTOR
(8W-18-2)
(8W-18-3)
(8W-18-4)
D25 20 VT/YL
S126
(8W-18-2)
(8W-18-3)
(8W-18-4)
D25 20 VT/YL
RHD
LHD
F15 18 DB/WT
F15 18 DG/WT
INSTRUMENT CLUSTER
(8W-40-7)
AIRBAG WARNING
INDICATOR DRIVERS
14
C106
26
C1
D25 20 VT/YL
D25 20 VT/YL
S201
(8W-18-5)
F25 18 TN/LG
D25 20 VT/YL
24
C2
16
C2
15
C2
FUSED IGNITION SWITCH OUTPUT (RUN)
FUSED IGNITION SWITCH OUTPUT (RUN-START)
PCI BUS
AIRBAG CONTROL MODULE (ORC) (PREMIUM)
GROUND
22
C2
Z100 18 BK/OR
G202
(8W-15-23)

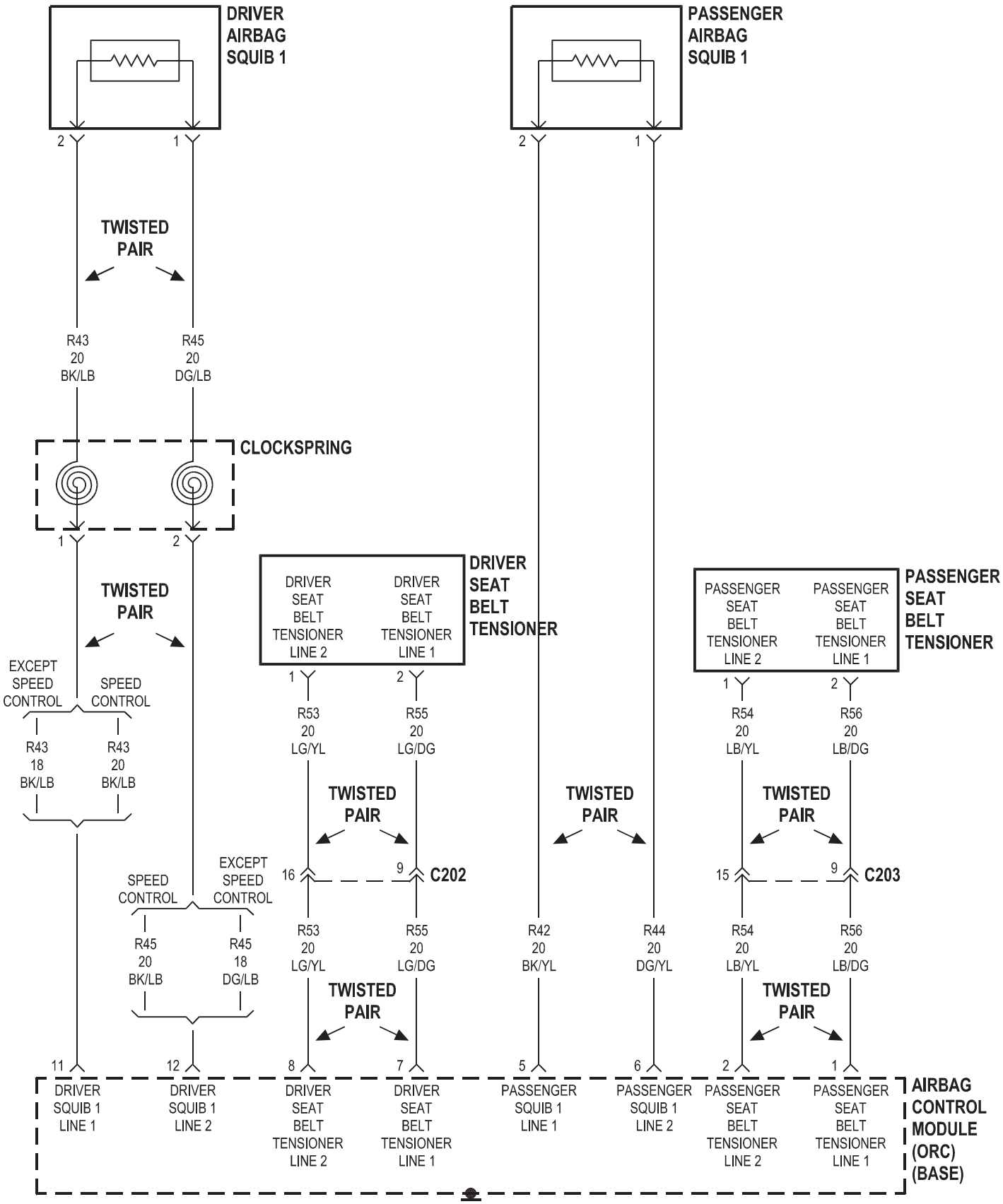
DRIVER AIRBAG SQUIB 1
PASSENGER AIRBAG SQUIB 1
2
1
TWISTED PAIR
R43 20 BK/LB
R45 20 DG/LB
CLOCKSPRING
DRIVER SEAT BELT TENSIONER
DRIVER SEAT BELT TENSIONER LINE 2
DRIVER SEAT BELT TENSIONER LINE 1
PASSENGER SEAT BELT TENSIONER
PASSENGER SEAT BELT TENSIONER LINE 2
PASSENGER SEAT BELT TENSIONER LINE 1
EXCEPT SPEED CONTROL
SPEED CONTROL
R43 18 BK/LB
R43 20 BK/LB
R53 20 LG/YL
R55 20 LG/DG
R54 20 LB/YL
R56 20 LB/DG
16
9
C202
15
C203
R45 20 BK/LB
R45 18 DG/LB
R42 20 BK/YL
R44 20 DG/YL
11
12
8
7
5
6
2
DRIVER SQUIB 1 LINE 1
DRIVER SQUIB 1 LINE 2
PASSENGER SQUIB 1 LINE 1
PASSENGER SQUIB 1 LINE 2
AIRBAG CONTROL MODULE (ORC) (BASE)

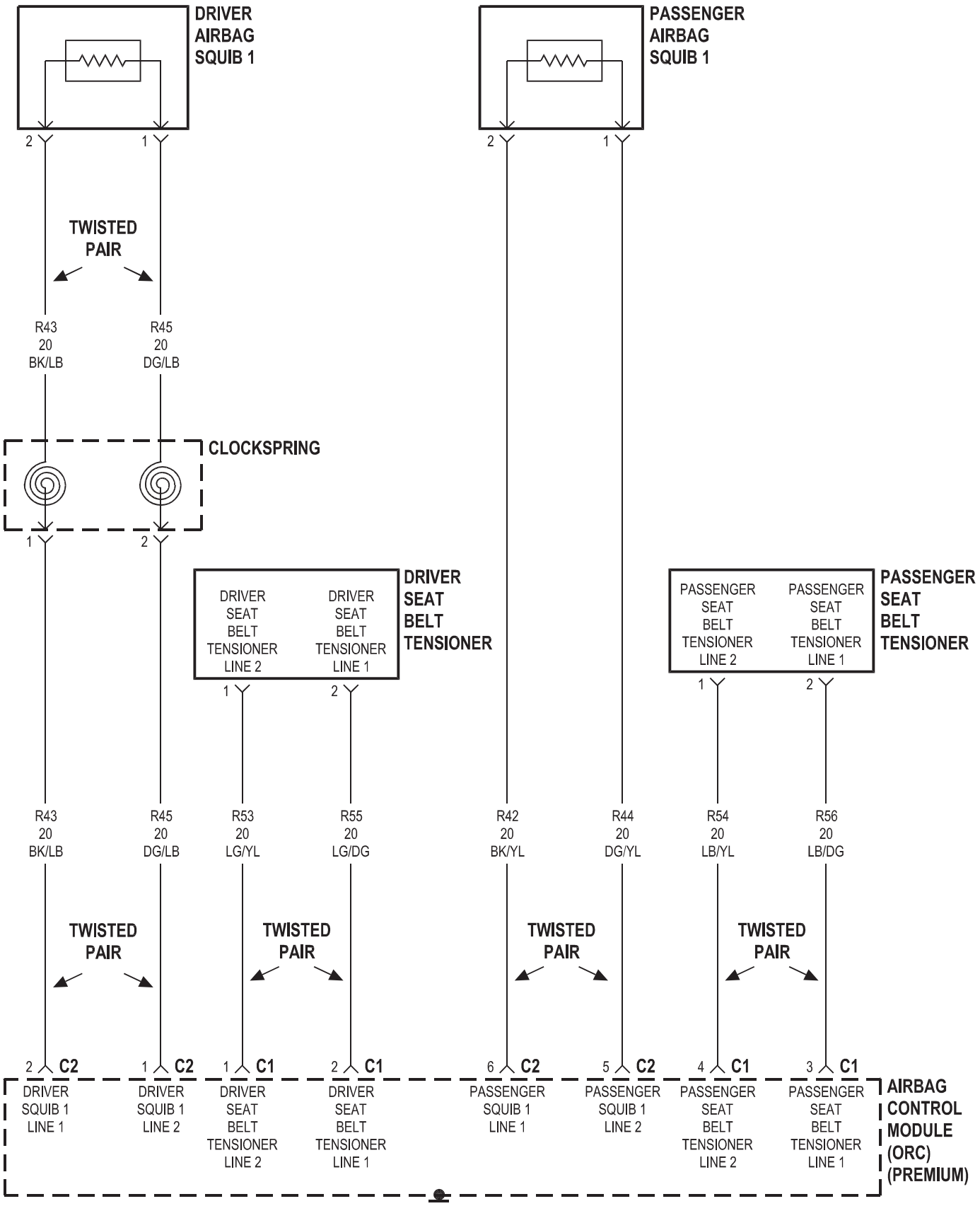
DRIVER AIRBAG SQUIB 1
PASSENGER AIRBAG SQUIB 1
2
1
TWISTED PAIR
R43 20 BK/LB
R45 20 DG/LB
CLOCKSPRING
DRIVER SEAT BELT TENSIONER LINE 2
DRIVER SEAT BELT TENSIONER LINE 1
DRIVER SEAT BELT TENSIONER
PASSENGER SEAT BELT TENSIONER LINE 2
PASSENGER SEAT BELT TENSIONER LINE 1
PASSENGER SEAT BELT TENSIONER
R43 20 BK/LB
R45 20 DG/LB
R53 20 LG/YL
R55 20 LG/DG
R42 20 BK/YL
R44 20 DG/YL
R54 20 LB/YL
R56 20 LB/DG
TWISTED PAIR
TWISTED PAIR
TWISTED PAIR
TWISTED PAIR
2 C2
1 C2
1 C1
2 C1
6 C2
5 C2
4 C1
3 C1
DRIVER SQUIB 1 LINE 1
DRIVER SQUIB 1 LINE 2
DRIVER SEAT BELT TENSIONER LINE 2
DRIVER SEAT BELT TENSIONER LINE 1
PASSENGER SQUIB 1 LINE 1
PASSENGER SQUIB 1 LINE 2
PASSENGER SEAT BELT TENSIONER LINE 2
PASSENGER SEAT BELT TENSIONER LINE 1
AIRBAG CONTROL MODULE (ORC) (PREMIUM)

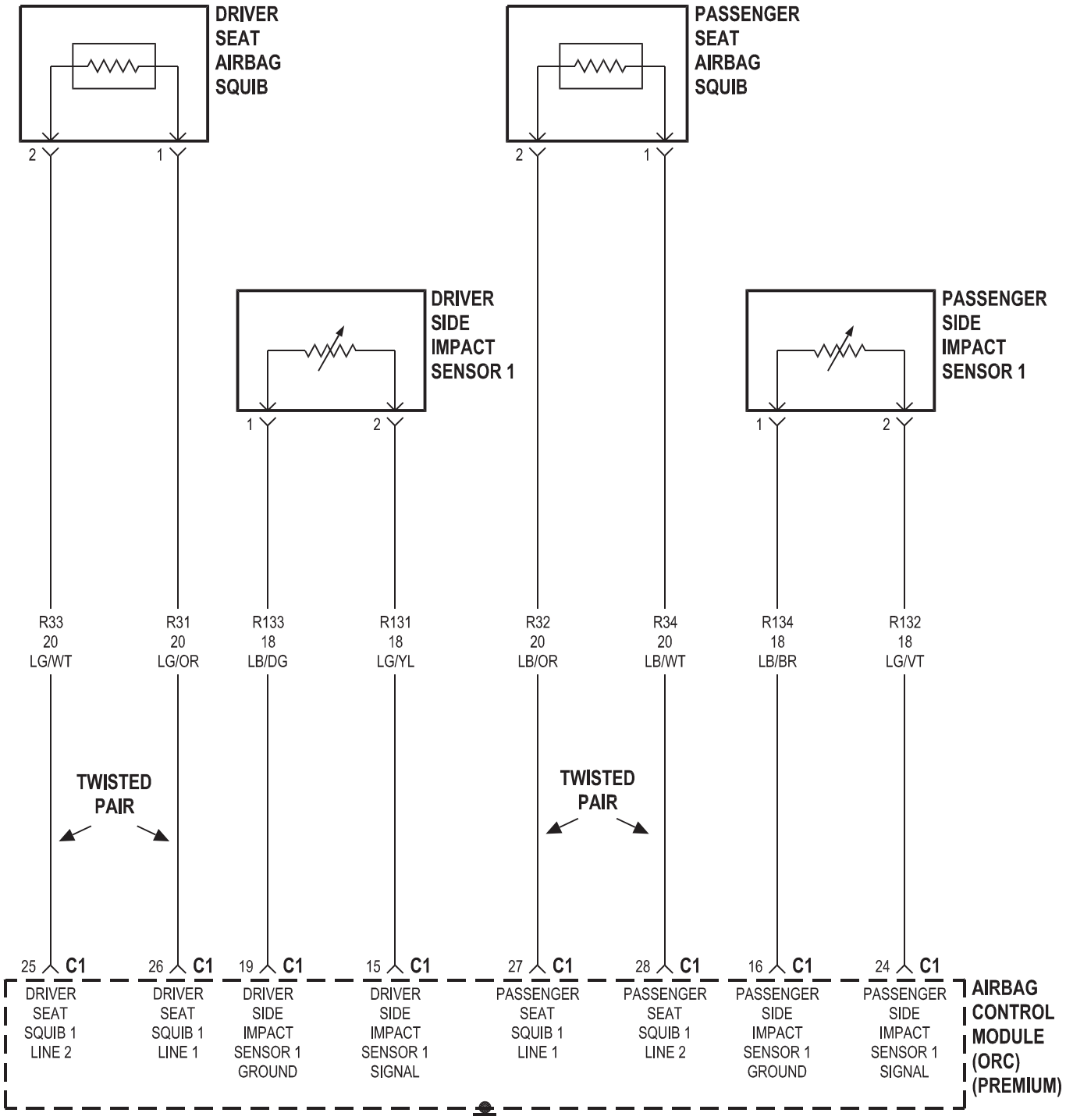
DRIVER SEAT AIRBAG SQUIB
PASSENGER SEAT AIRBAG SQUIB
DRIVER SIDE IMPACT SENSOR 1
PASSENGER SIDE IMPACT SENSOR 1
2
1
R33 20 LG/WT
R31 20 LG/OR
R133 18 LB/DG
R131 18 LG/YL
R32 20 LB/OR
R34 20 LB/WT
R134 18 LB/BR
R132 18 LG/VT
TWISTED PAIR
TWISTED PAIR
25 C1 DRIVER SEAT SQUIB 1 LINE 2
26 C1 DRIVER SEAT SQUIB 1 LINE 1
19 C1 DRIVER SIDE IMPACT SENSOR 1 GROUND
15 C1 DRIVER SIDE IMPACT SENSOR 1 SIGNAL
27 C1 PASSENGER SEAT SQUIB 1 LINE 1
28 C1 PASSENGER SEAT SQUIB 1 LINE 2
16 C1 PASSENGER SIDE IMPACT SENSOR 1 GROUND
24 C1 PASSENGER SIDE IMPACT SENSOR 1 SIGNAL
AIRBAG CONTROL MODULE (ORC) (PREMIUM)

8W-44 INTERIOR LIGHTING

Component	Page
A/C-Heater Control Switch	8W-44-5
Cargo Lamp	8W-44-2
Center Stack Lamp	8W-44-6
Dome Lamp	8W-44-3
Dome Lamp/Intrusion Sensor	8W-44-2, 3, 5
Front Power Window Switch	8W-44-5
Fuse 10	8W-44-4
Fuse 13	8W-44-2
Fuse 14	8W-44-4
Fuse Block	8W-44-2, 4
G200	8W-44-2, 5
G201	8W-44-6
G203	8W-44-3, 4, 5
Headlamp Leveling Switch	8W-44-6
Instrument Cluster	8W-44-2, 4, 5
Left Visor/Vanity Lamp	8W-44-3
Map/Reading Lamps	8W-44-4
Overhead Console Module	8W-44-2, 3, 5
Radio	8W-44-5
Rear Window Defogger Switch	8W-44-6
Rear Wiper Switch	8W-44-6
Remote Keyless Entry Module	8W-44-2
Right Visor/Vanity Lamp	8W-44-3
Traction Control Switch	8W-44-6
Transmission Range Indicator Illumination	8W-44-5

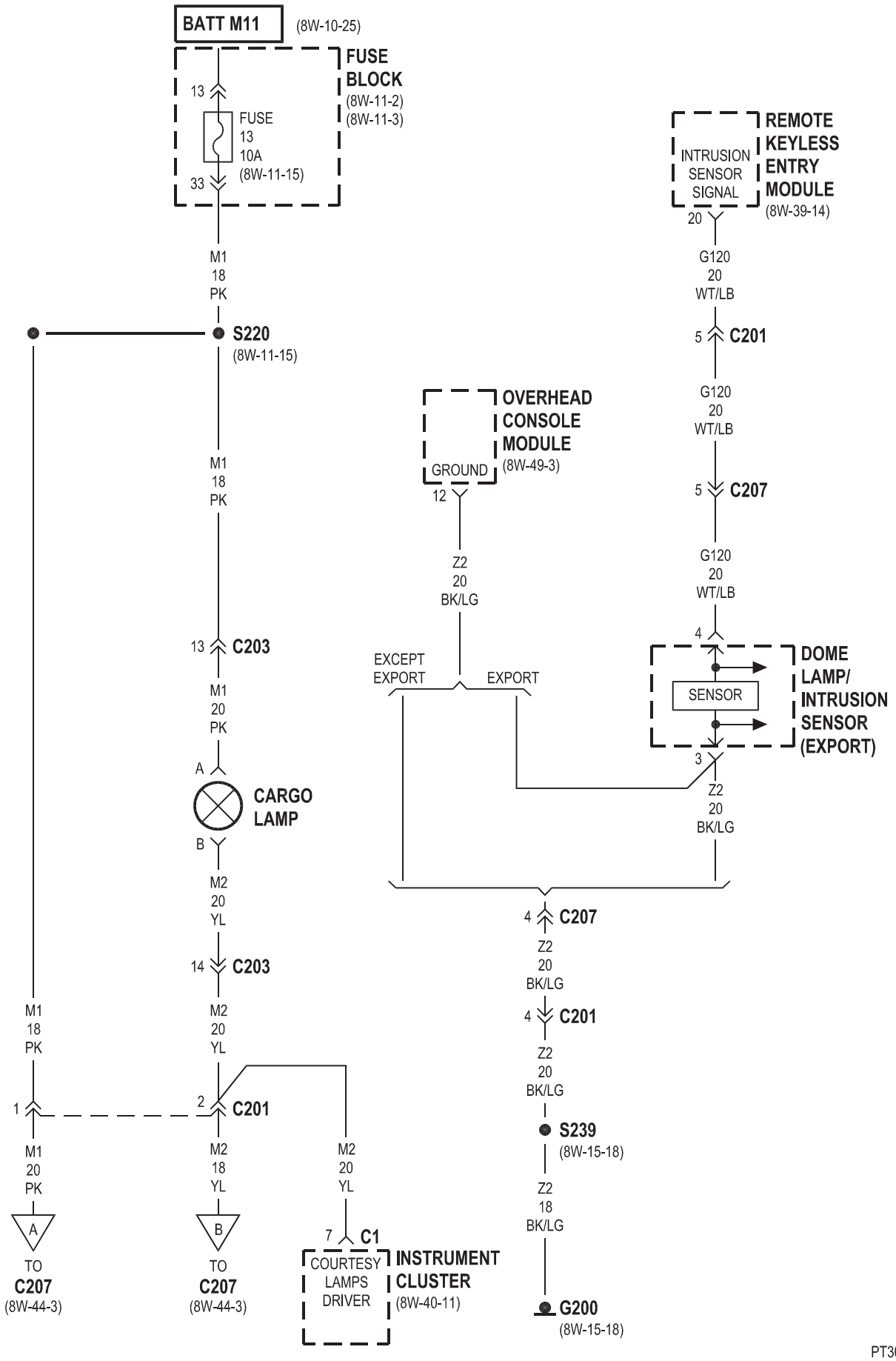
BATT M11
(8W-10-25)
FUSE BLOCK
(8W-11-2)
(8W-11-3)
13
FUSE
13
10A
(8W-11-15)
33
M1
18
PK
S220
(8W-11-15)
M1
18
PK
13
C203
M1
20
PK
A
CARGO LAMP
B
M2
20
YL
14
C203
M2
20
YL
M1
18
PK
1
2
C201
M1
20
PK
M2
18
YL
M2
20
YL
A
B
TO
C207
(8W-44-3)
TO
C207
(8W-44-3)
7
C1
COURTESY LAMPS DRIVER
INSTRUMENT CLUSTER
(8W-40-11)
OVERHEAD CONSOLE MODULE
(8W-49-3)
GROUND
12
Z2
20
BK/LG
EXCEPT EXPORT
EXPORT
4
C207
Z2
20
BK/LG
4
C201
Z2
20
BK/LG
S239
(8W-15-18)
Z2
18
BK/LG
G200
(8W-15-18)
REMOTE KEYLESS ENTRY MODULE
(8W-39-14)
INTRUSION SENSOR SIGNAL
20
G120
20
WT/LB
5
C201
G120
20
WT/LB
5
C207
G120
20
WT/LB
4
DOME LAMP/ INTRUSION SENSOR (EXPORT)
SENSOR
3
Z2
20
BK/LG

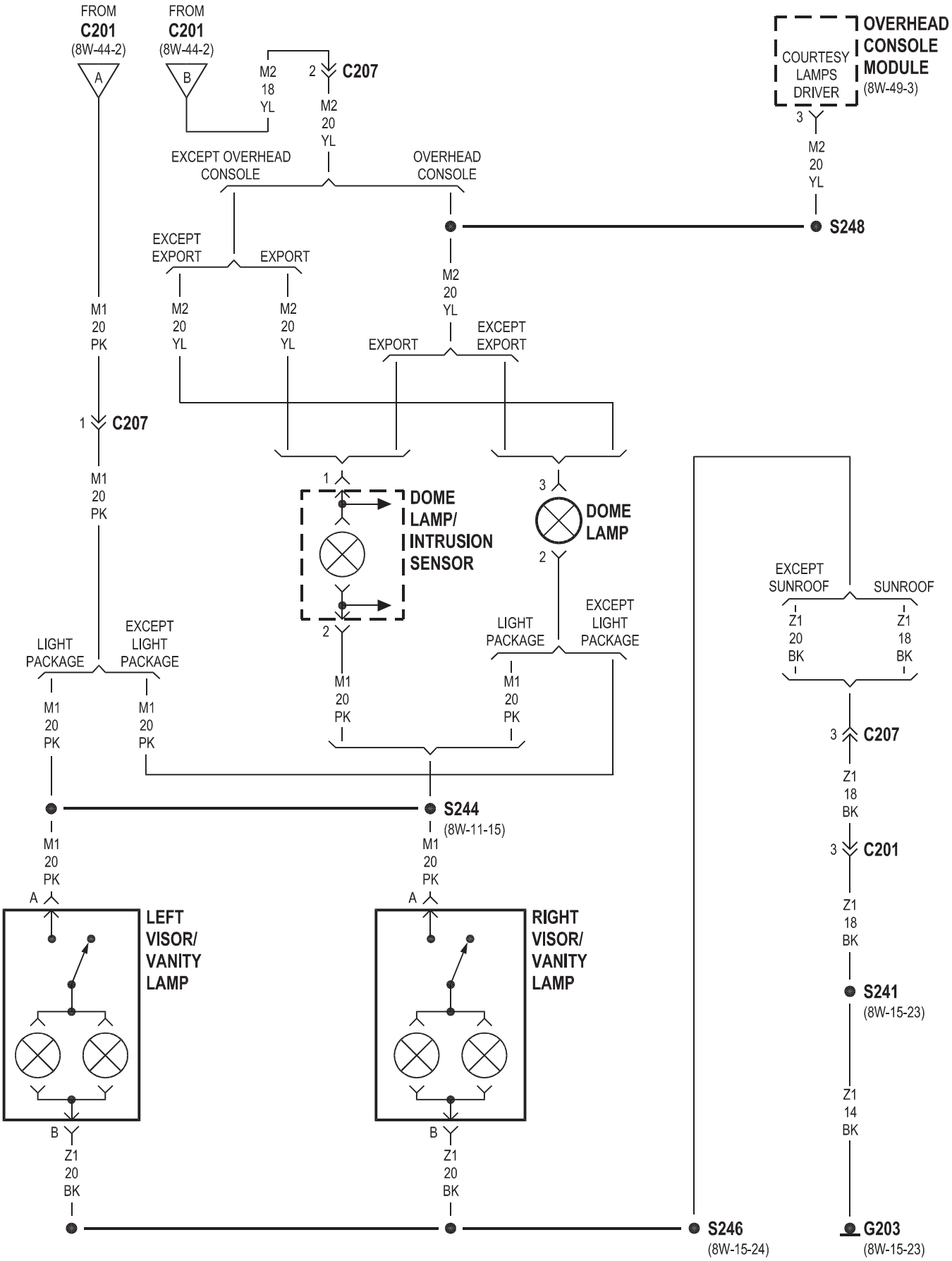
FROM
C201
(8W-44-2)
A
FROM
C201
(8W-44-2)
B
M2
18
YL
2
C207
M2
20
YL
OVERHEAD
CONSOLE
MODULE
(8W-49-3)
COURTESY
LAMPS
DRIVER
3
M2
20
YL
S248
EXCEPT OVERHEAD
CONSOLE
OVERHEAD
CONSOLE
EXCEPT
EXPORT
EXPORT
M2
20
YL
M2
20
YL
M2
20
YL
EXPORT
EXCEPT
EXPORT
M1
20
PK
1
C207
M1
20
PK
1
DOME
LAMP/
INTRUSION
SENSOR
2
3
DOME
LAMP
2
EXCEPT
SUNROOF
SUNROOF
Z1
20
BK
Z1
18
BK
LIGHT
PACKAGE
EXCEPT
LIGHT
PACKAGE
LIGHT
PACKAGE
EXCEPT
LIGHT
PACKAGE
M1
20
PK
M1
20
PK
M1
20
PK
M1
20
PK
3
C207
Z1
18
BK
S244
(8W-11-15)
M1
20
PK
M1
20
PK
3
C201
A
A
Z1
18
BK
LEFT
VISOR/
VANITY
LAMP
RIGHT
VISOR/
VANITY
LAMP
S241
(8W-15-23)
B
B
Z1
14
BK
Z1
20
BK
Z1
20
BK
S246
(8W-15-24)
G203
(8W-15-23)

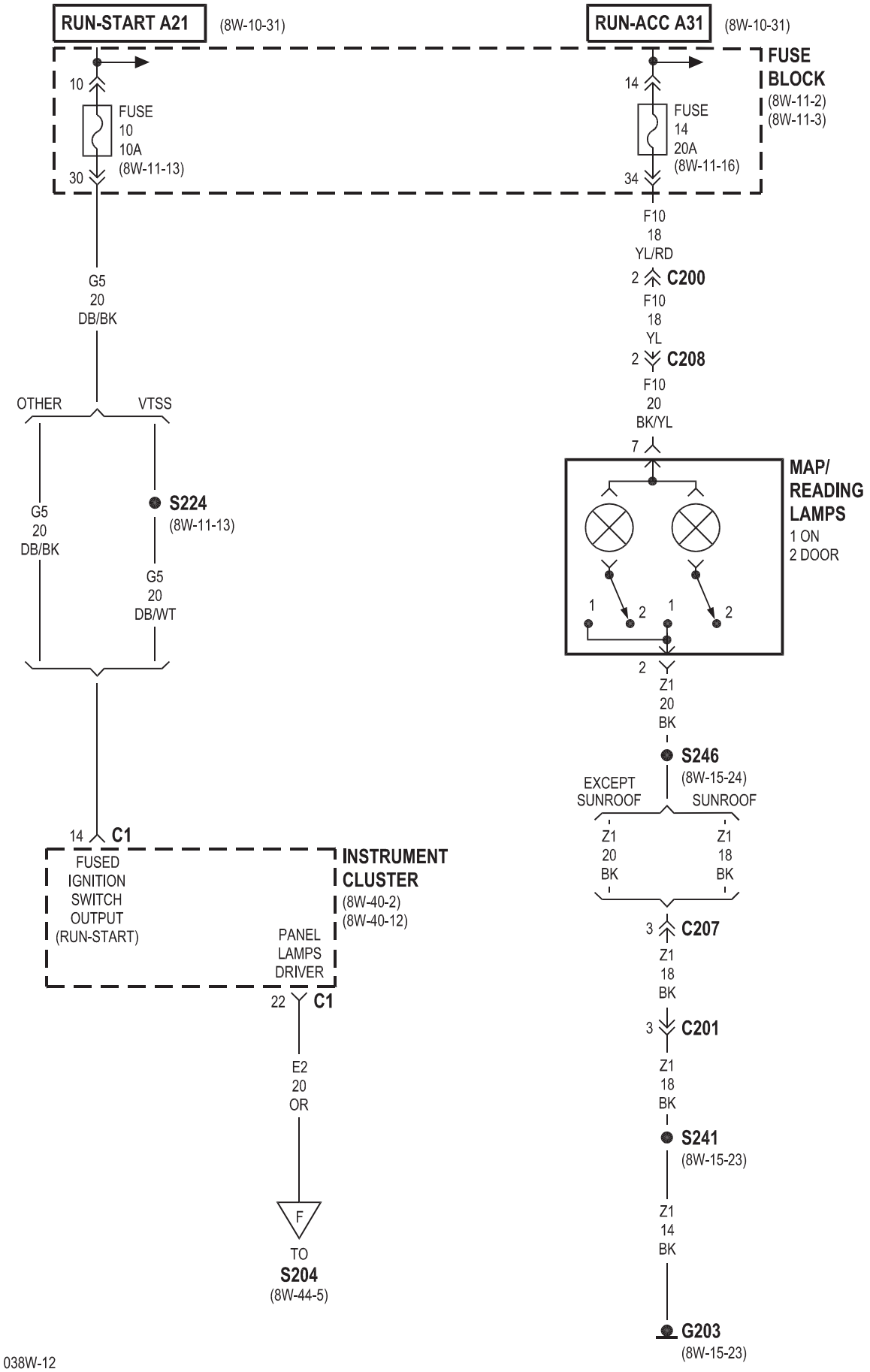
RUN-START A21
(8W-10-31)
RUN-ACC A31
(8W-10-31)
FUSE BLOCK
(8W-11-2)
(8W-11-3)
10
FUSE
10
10A
(8W-11-13)
30
14
FUSE
14
20A
(8W-11-16)
34
F10
18
YL/RD
2 C200
F10
18
YL
2 C208
F10
20
BK/YL
7
G5
20
DB/BK
OTHER
VTSS
G5
20
DB/BK
S224
(8W-11-13)
G5
20
DB/WT
MAP/
READING
LAMPS
1 ON
2 DOOR
1
2
1
2
2
Z1
20
BK
S246
(8W-15-24)
EXCEPT
SUNROOF
SUNROOF
Z1
20
BK
Z1
18
BK
3 C207
Z1
18
BK
3 C201
Z1
18
BK
S241
(8W-15-23)
Z1
14
BK
G203
(8W-15-23)
14 C1
FUSED
IGNITION
SWITCH
OUTPUT
(RUN-START)
INSTRUMENT
CLUSTER
(8W-40-2)
(8W-40-12)
PANEL
LAMPS
DRIVER
22 C1
E2
20
OR
F
TO
S204
(8W-44-5)

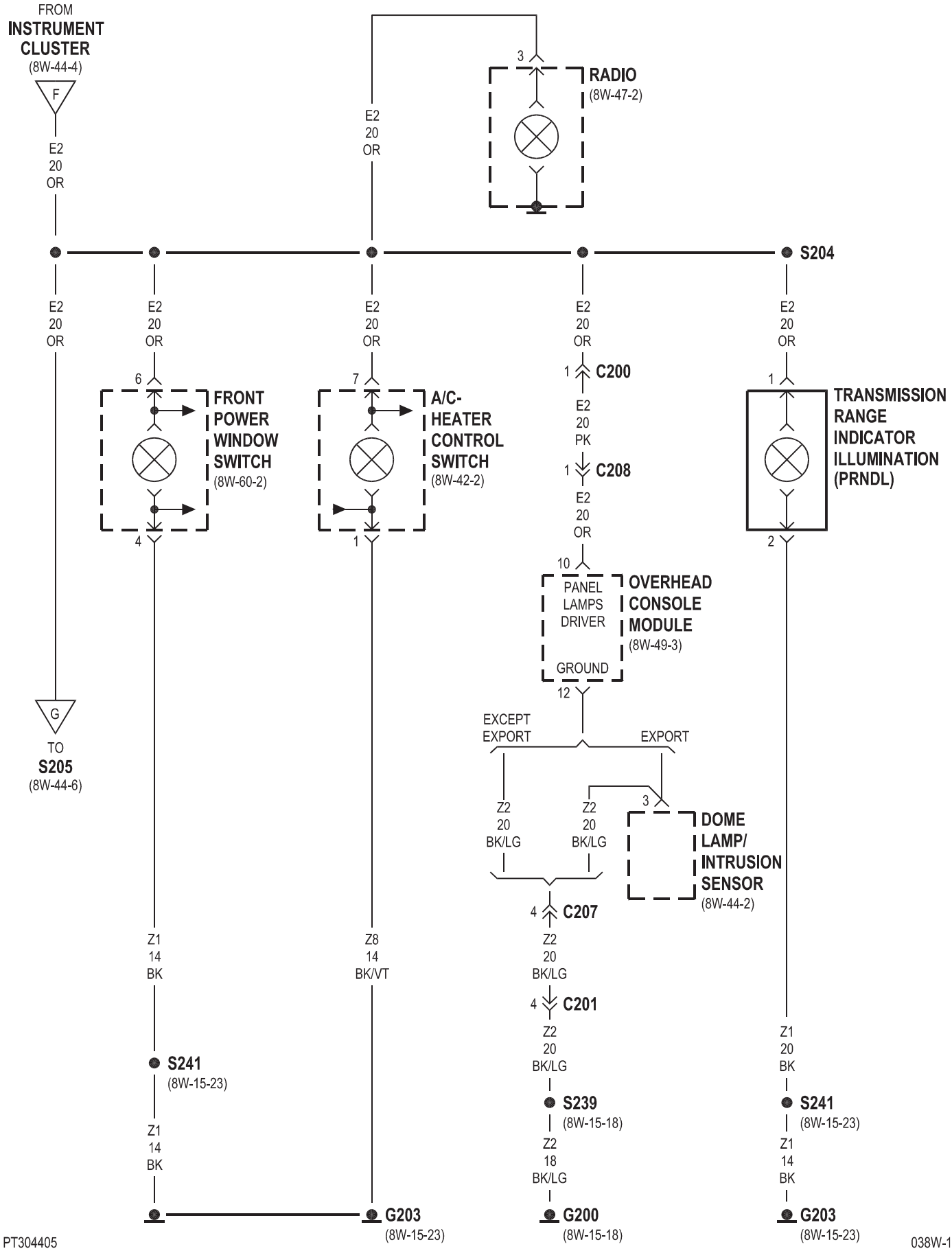
FROM
INSTRUMENT CLUSTER
(8W-44-4)
F
E2
20
OR
G
TO
S205
(8W-44-6)
E2
20
OR
3
RADIO
(8W-47-2)
S204
6
FRONT POWER WINDOW SWITCH
(8W-60-2)
4
7
A/C-HEATER CONTROL SWITCH
(8W-42-2)
1
1
C200
E2
20
PK
1
C208
10
PANEL LAMPS DRIVER
GROUND
OVERHEAD CONSOLE MODULE
(8W-49-3)
12
EXCEPT EXPORT
EXPORT
Z2
20
BK/LG
3
DOME LAMP/ INTRUSION SENSOR
(8W-44-2)
4
C207
4
C201
1
TRANSMISSION RANGE INDICATOR ILLUMINATION (PRNDL)
2
Z1
14
BK
Z8
14
BK/VT
S241
(8W-15-23)
S239
(8W-15-18)
Z2
18
BK/LG
Z1
20
BK
G203
(8W-15-23)
G200
(8W-15-18)

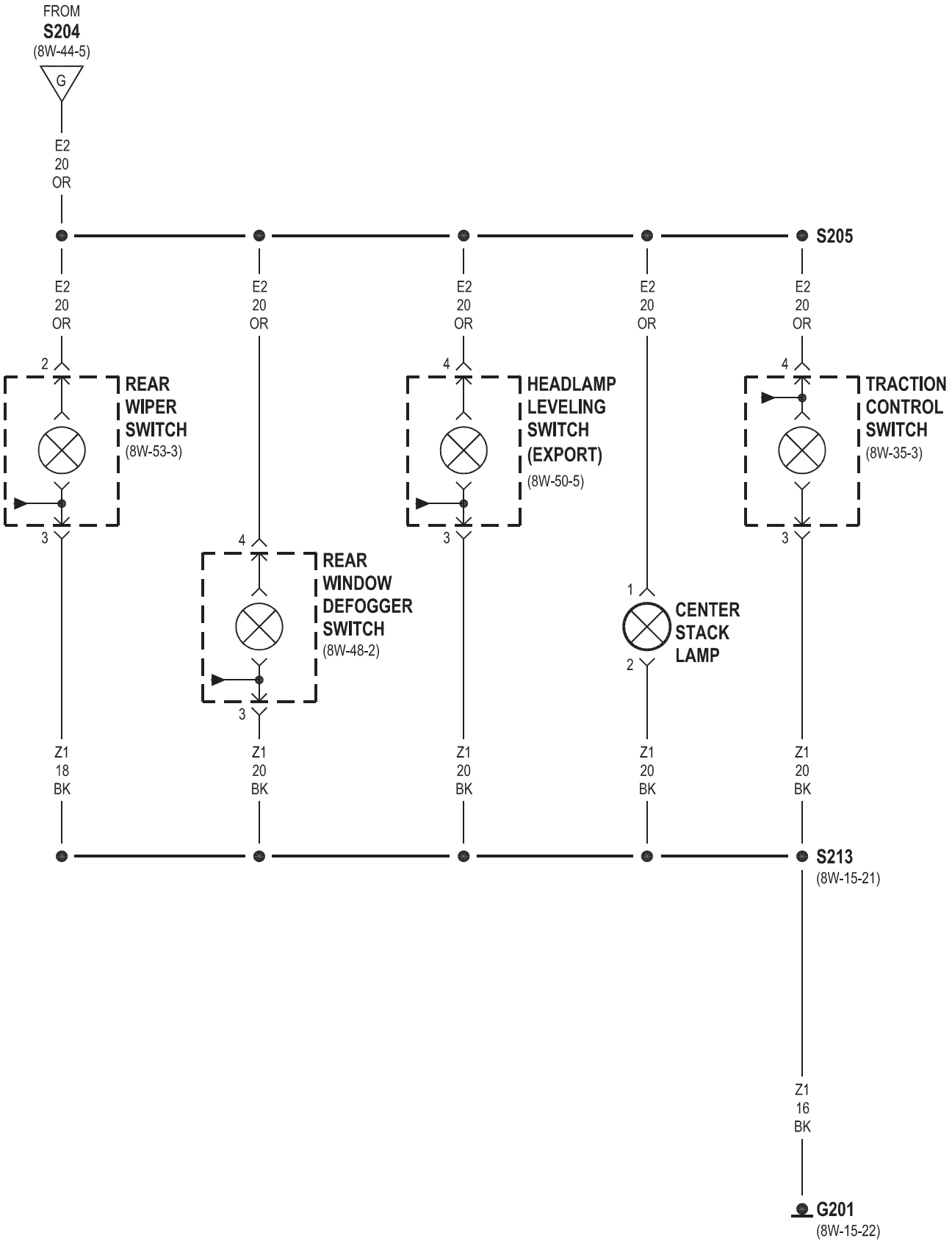
FROM
S204
(8W-44-5)
G
E2
20
OR
S205
E2
20
OR
2
REAR
WIPER
SWITCH
(8W-53-3)
3
4
REAR
WINDOW
DEFOGGER
SWITCH
(8W-48-2)
3
4
HEADLAMP
LEVELING
SWITCH
(EXPORT)
(8W-50-5)
3
1
CENTER
STACK
LAMP
2
4
TRACTION
CONTROL
SWITCH
(8W-35-3)
3
Z1
18
BK
Z1
20
BK
S213
(8W-15-21)
Z1
16
BK
G201
(8W-15-22)

8W-47 AUDIO SYSTEM

Component	Page
Data Link Connector	8W-47-2
Fuse 2	8W-47-2
Fuse 14	8W-47-2
Fuse 18	8W-47-2
Fuse Block	8W-47-2
G200	8W-47-2
Headlamp Switch	8W-47-2
Instrument Cluster	8W-47-2
Left Front Door Speaker	8W-47-4
Left Instrument Panel Speaker	8W-47-4
Left Rear Speaker	8W-47-3
Power Distribution Center	8W-47-2
Radio	8W-47-2, 3, 4
Right Front Door Speaker	8W-47-4
Right Instrument Panel Speaker	8W-47-4
Right Rear Speaker	8W-47-3

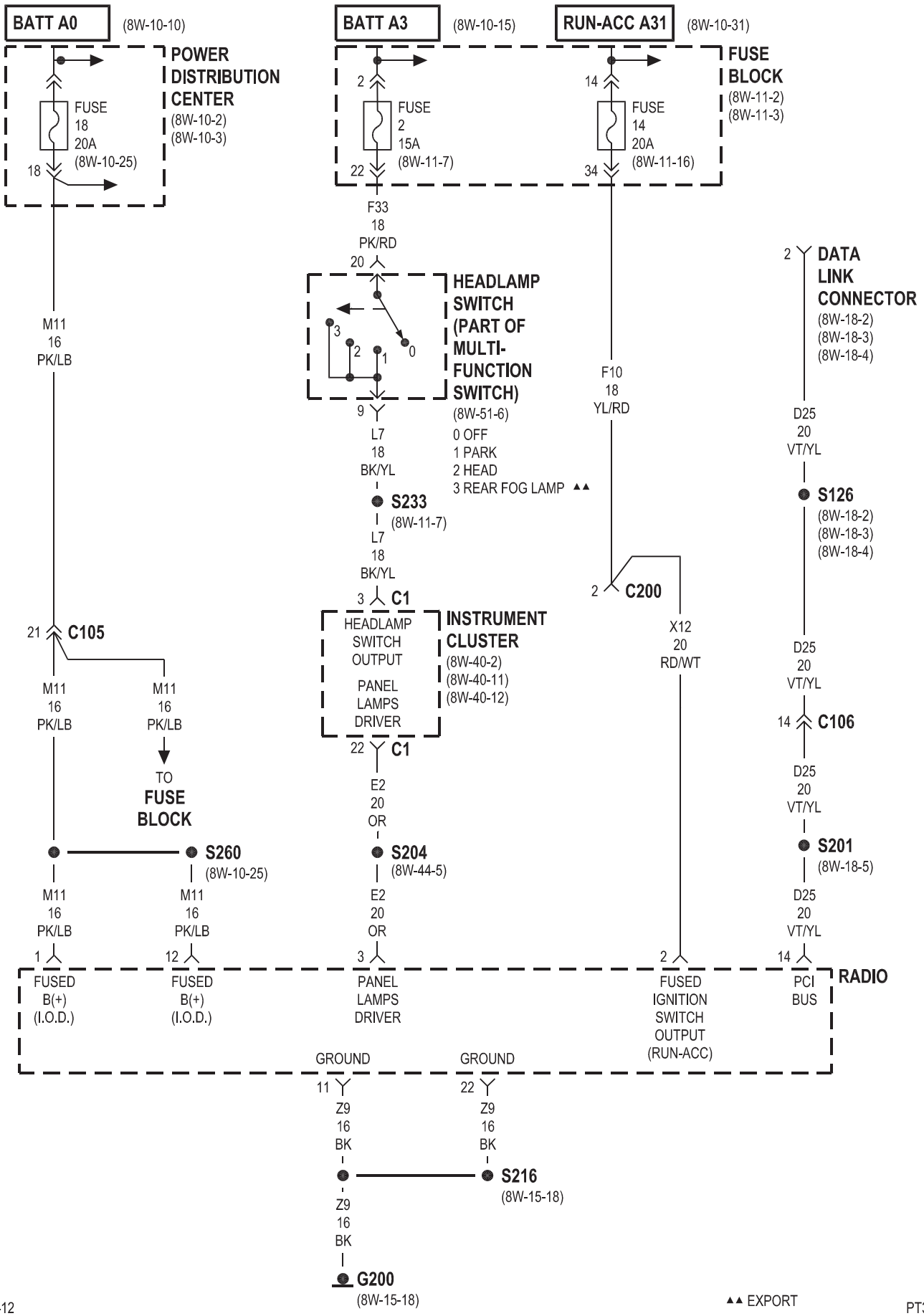
BATT A0
(8W-10-10)
POWER DISTRIBUTION CENTER
(8W-10-2)
(8W-10-3)
FUSE 18 20A
(8W-10-25)
18
M11 16 PK/LB
21
C105
M11 16 PK/LB
M11 16 PK/LB
TO FUSE BLOCK
S260
(8W-10-25)
M11 16 PK/LB
M11 16 PK/LB
1
12
BATT A3
(8W-10-15)
2
FUSE 2 15A
(8W-11-7)
22
F33 18 PK/RD
20
HEADLAMP SWITCH (PART OF MULTI-FUNCTION SWITCH)
(8W-51-6)
0 OFF
1 PARK
2 HEAD
3 REAR FOG LAMP ▲▲
9
L7 18 BK/YL
S233
(8W-11-7)
L7 18 BK/YL
3
C1
HEADLAMP SWITCH OUTPUT
PANEL LAMPS DRIVER
INSTRUMENT CLUSTER
(8W-40-2)
(8W-40-11)
(8W-40-12)
22
C1
E2 20 OR
S204
(8W-44-5)
E2 20 OR
3
RUN-ACC A31
(8W-10-31)
14
FUSE 14 20A
(8W-11-16)
34
FUSE BLOCK
(8W-11-2)
(8W-11-3)
F10 18 YL/RD
2
C200
X12 20 RD/WT
2
DATA LINK CONNECTOR
(8W-18-2)
(8W-18-3)
(8W-18-4)
D25 20 VT/YL
S126
(8W-18-2)
(8W-18-3)
(8W-18-4)
D25 20 VT/YL
14
C106
D25 20 VT/YL
S201
(8W-18-5)
D25 20 VT/YL
14
RADIO
FUSED B(+) (I.O.D.)
FUSED B(+) (I.O.D.)
PANEL LAMPS DRIVER
FUSED IGNITION SWITCH OUTPUT (RUN-ACC)
PCI BUS
GROUND
GROUND
11
22
Z9 16 BK
Z9 16 BK
S216
(8W-15-18)
Z9 16 BK
G200
(8W-15-18)

▲▲ EXPORT

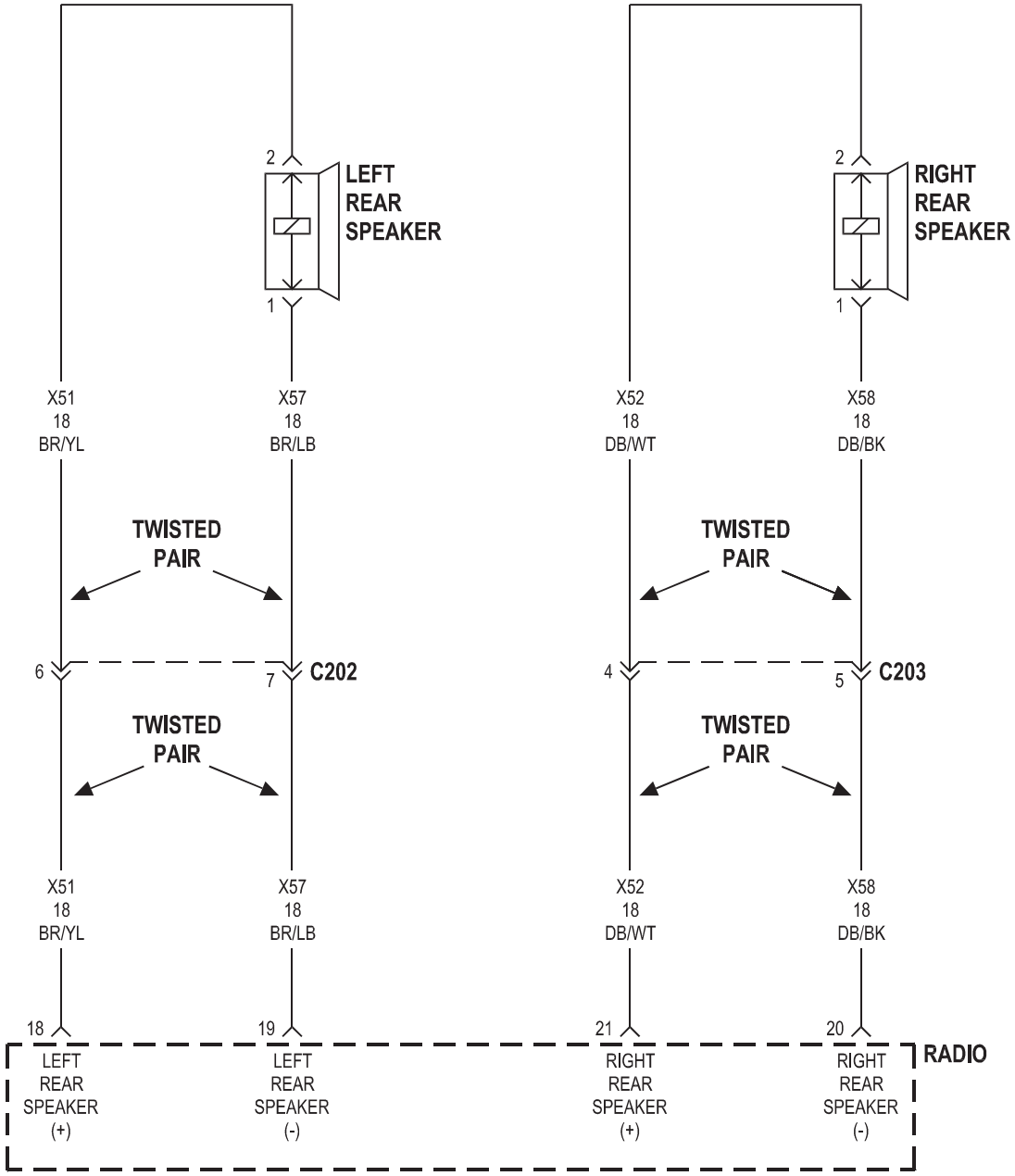
2
LEFT
REAR
SPEAKER
1
2
RIGHT
REAR
SPEAKER
1
X51
18
BR/YL
X57
18
BR/LB
X52
18
DB/WT
X58
18
DB/BK
TWISTED
PAIR
TWISTED
PAIR
6
7
C202
4
5
C203
TWISTED
PAIR
TWISTED
PAIR
X51
18
BR/YL
X57
18
BR/LB
X52
18
DB/WT
X58
18
DB/BK
18
19
21
20
RADIO
LEFT
REAR
SPEAKER
(+)
LEFT
REAR
SPEAKER
(-)
RIGHT
REAR
SPEAKER
(+)
RIGHT
REAR
SPEAKER
(-)

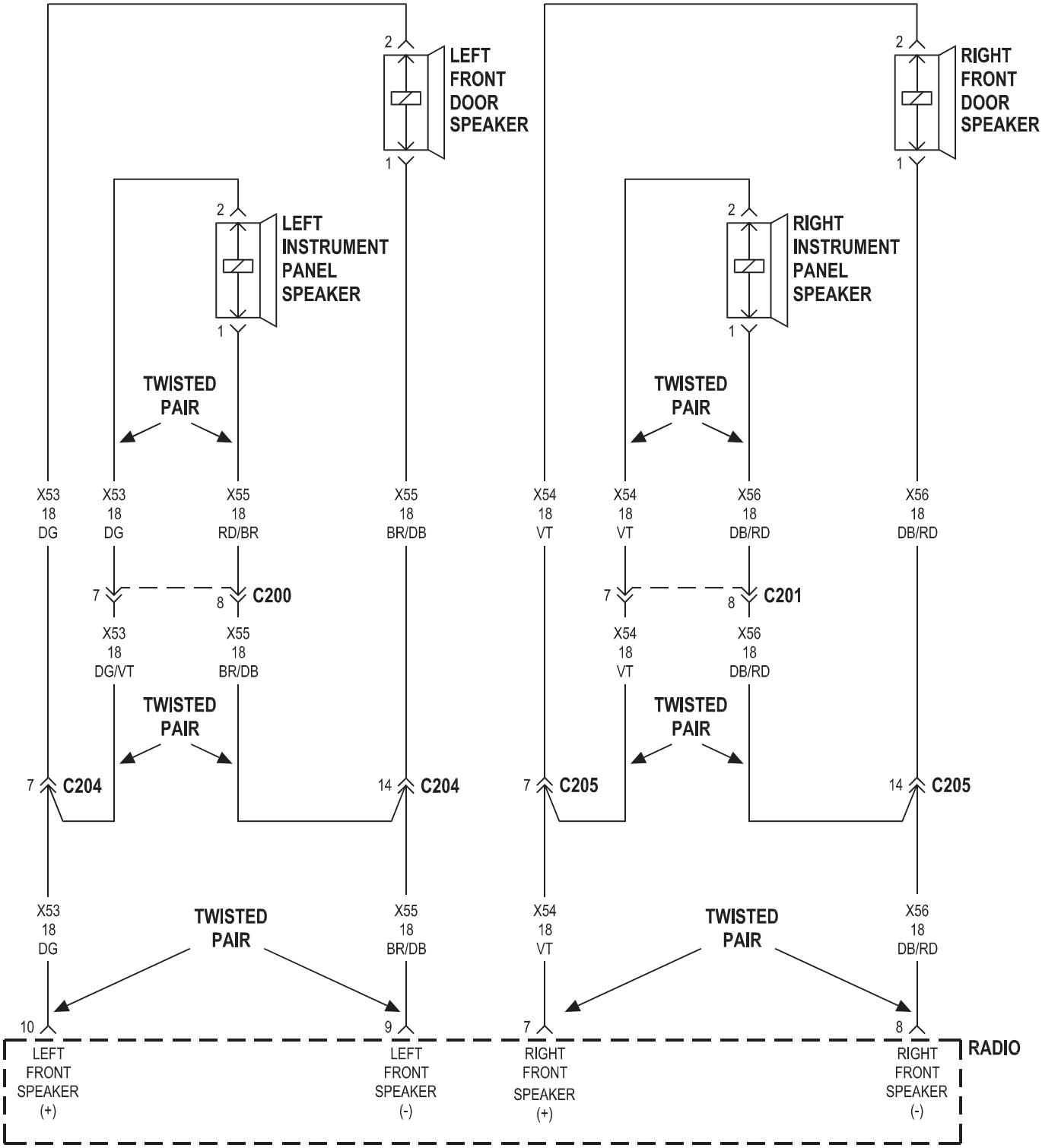
LEFT FRONT DOOR SPEAKER
RIGHT FRONT DOOR SPEAKER
LEFT INSTRUMENT PANEL SPEAKER
RIGHT INSTRUMENT PANEL SPEAKER
TWISTED PAIR
X53 18 DG
X53 18 DG
X55 18 RD/BR
X55 18 BR/DB
X54 18 VT
X54 18 VT
X56 18 DB/RD
X56 18 DB/RD
C200
C201
X53 18 DG/VT
X55 18 BR/DB
X54 18 VT
X56 18 DB/RD
C204
C205
LEFT FRONT SPEAKER (+)
LEFT FRONT SPEAKER (-)
RIGHT FRONT SPEAKER (+)
RIGHT FRONT SPEAKER (-)
RADIO

8W-48 REAR WINDOW DEFOGGER

Component	Page
Fuse 6	8W-48-2
Fuse 8	8W-48-2
Fuse Block	8W-48-2
G201	8W-48-2
G300	8W-48-2
Instrument Cluster	8W-48-2
Power Distribution Center	8W-48-2
Rear Window Defogger	8W-48-2
Rear Window Defogger Switch	8W-48-2

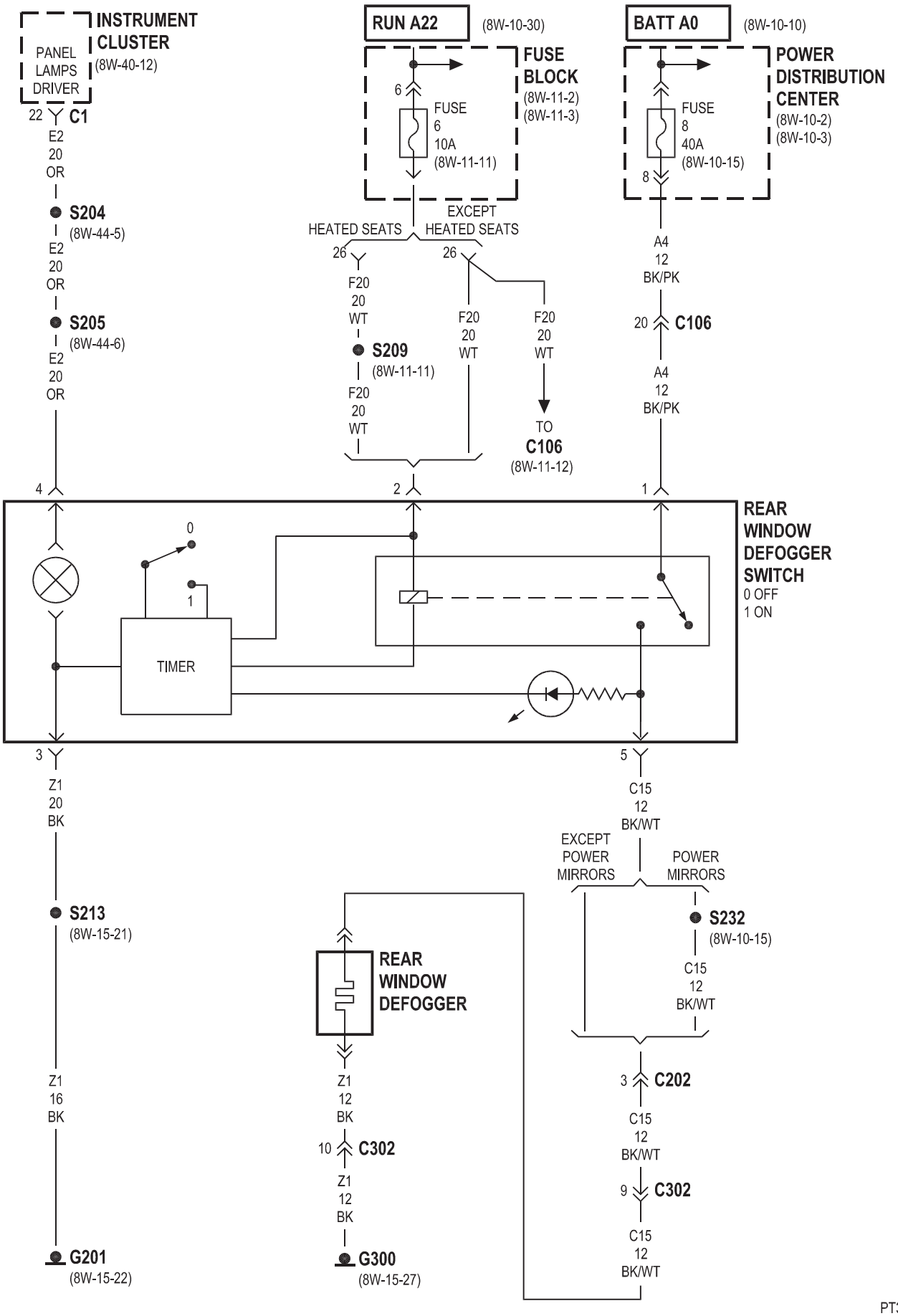
INSTRUMENT CLUSTER
(8W-40-12)
PANEL LAMPS DRIVER
22
C1
E2
20
OR
S204
(8W-44-5)
E2
20
OR
S205
(8W-44-6)
E2
20
OR
RUN A22
(8W-10-30)
FUSE BLOCK
(8W-11-2)
(8W-11-3)
6
FUSE
6
10A
(8W-11-11)
HEATED SEATS
EXCEPT HEATED SEATS
26
26
F20
20
WT
S209
(8W-11-11)
F20
20
WT
F20
20
WT
F20
20
WT
TO
C106
(8W-11-12)
BATT A0
(8W-10-10)
POWER DISTRIBUTION CENTER
(8W-10-2)
(8W-10-3)
FUSE
8
40A
(8W-10-15)
8
A4
12
BK/PK
20
C106
A4
12
BK/PK
4
2
1
REAR WINDOW DEFOGGER SWITCH
0 OFF
1 ON
0
1
TIMER
3
5
Z1
20
BK
C15
12
BK/WT
EXCEPT POWER MIRRORS
POWER MIRRORS
S213
(8W-15-21)
S232
(8W-10-15)
C15
12
BK/WT
REAR WINDOW DEFOGGER
Z1
16
BK
Z1
12
BK
10
C302
Z1
12
BK
3
C202
C15
12
BK/WT
9
C302
C15
12
BK/WT
G201
(8W-15-22)
G300
(8W-15-27)

8W-49 OVERHEAD CONSOLE

Component	Page
Ambient Temperature Sensor	8W-49-2
Cargo Lamp	8W-49-3
Dome Lamp/Intrusion Sensor	8W-49-3
Fuse 13	8W-49-2
Fuse 14	8W-49-2
Fuse Block	8W-49-2
G200	8W-49-3
G203	8W-49-3
Instrument Cluster	8W-49-3
Overhead Console Module	8W-49-2, 3
Power Sunroof Module	8W-49-3
Radio	8W-49-2

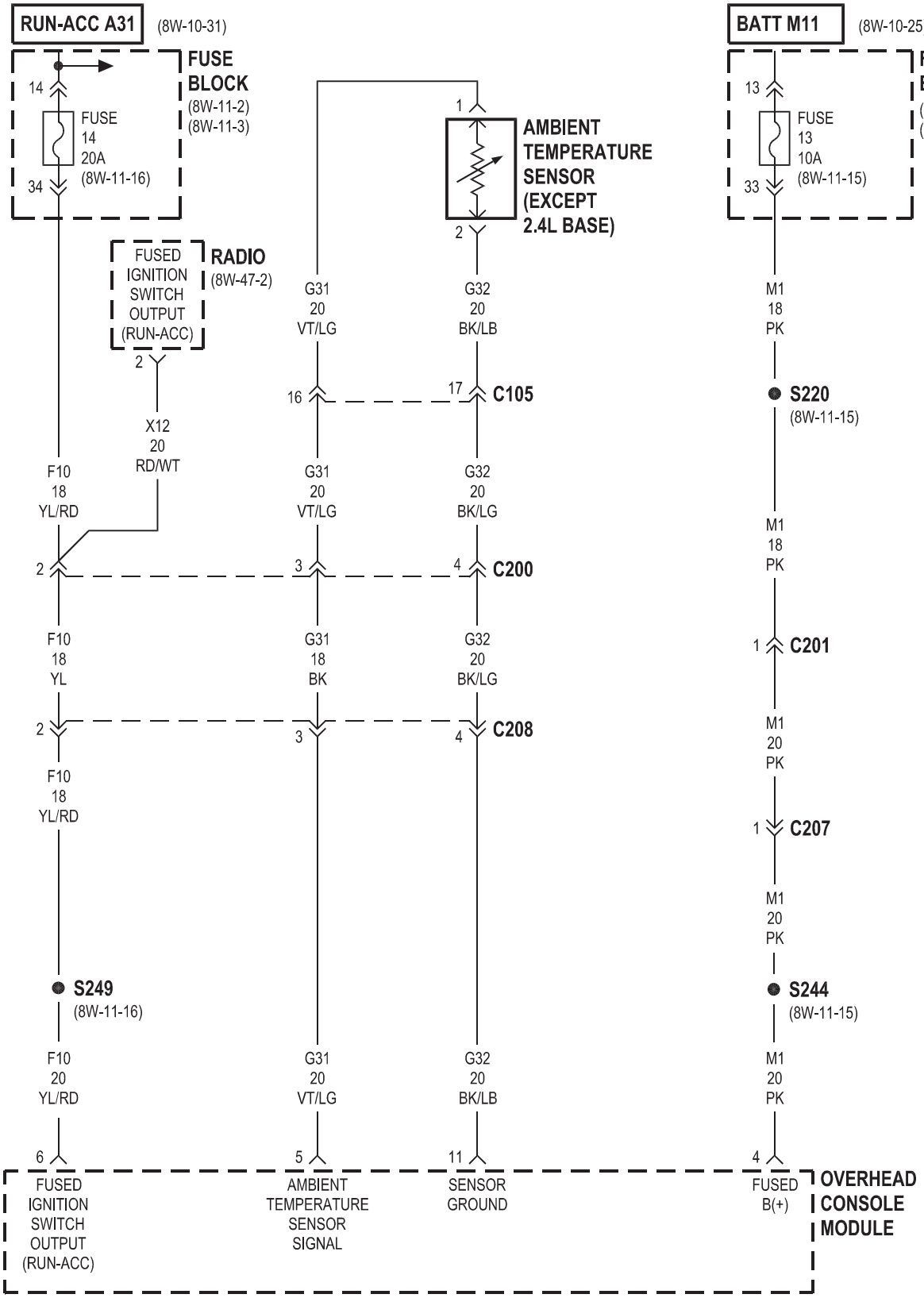
RUN-ACC A31
(8W-10-31)
FUSE BLOCK
(8W-11-2)
(8W-11-3)
14
FUSE 14 20A
(8W-11-16)
34
FUSED IGNITION SWITCH OUTPUT (RUN-ACC)
RADIO
(8W-47-2)
2
X12 20 RD/WT
F10 18 YL/RD
2
F10 18 YL
2
F10 18 YL/RD
S249
(8W-11-16)
F10 20 YL/RD
6
FUSED IGNITION SWITCH OUTPUT (RUN-ACC)
G31 20 VT/LG
16
G31 20 VT/LG
3
G31 18 BK
3
G31 20 VT/LG
5
AMBIENT TEMPERATURE SENSOR SIGNAL
1
AMBIENT TEMPERATURE SENSOR (EXCEPT 2.4L BASE)
2
G32 20 BK/LB
17
C105
G32 20 BK/LG
4
C200
G32 20 BK/LG
4
C208
G32 20 BK/LB
11
SENSOR GROUND
BATT M11
(8W-10-25)
FUSE BLOCK
(8W-11-2)
(8W-11-3)
13
FUSE 13 10A
(8W-11-15)
33
M1 18 PK
S220
(8W-11-15)
M1 18 PK
1
C201
M1 20 PK
1
C207
M1 20 PK
S244
(8W-11-15)
M1 20 PK
4
FUSED B(+)
OVERHEAD CONSOLE MODULE

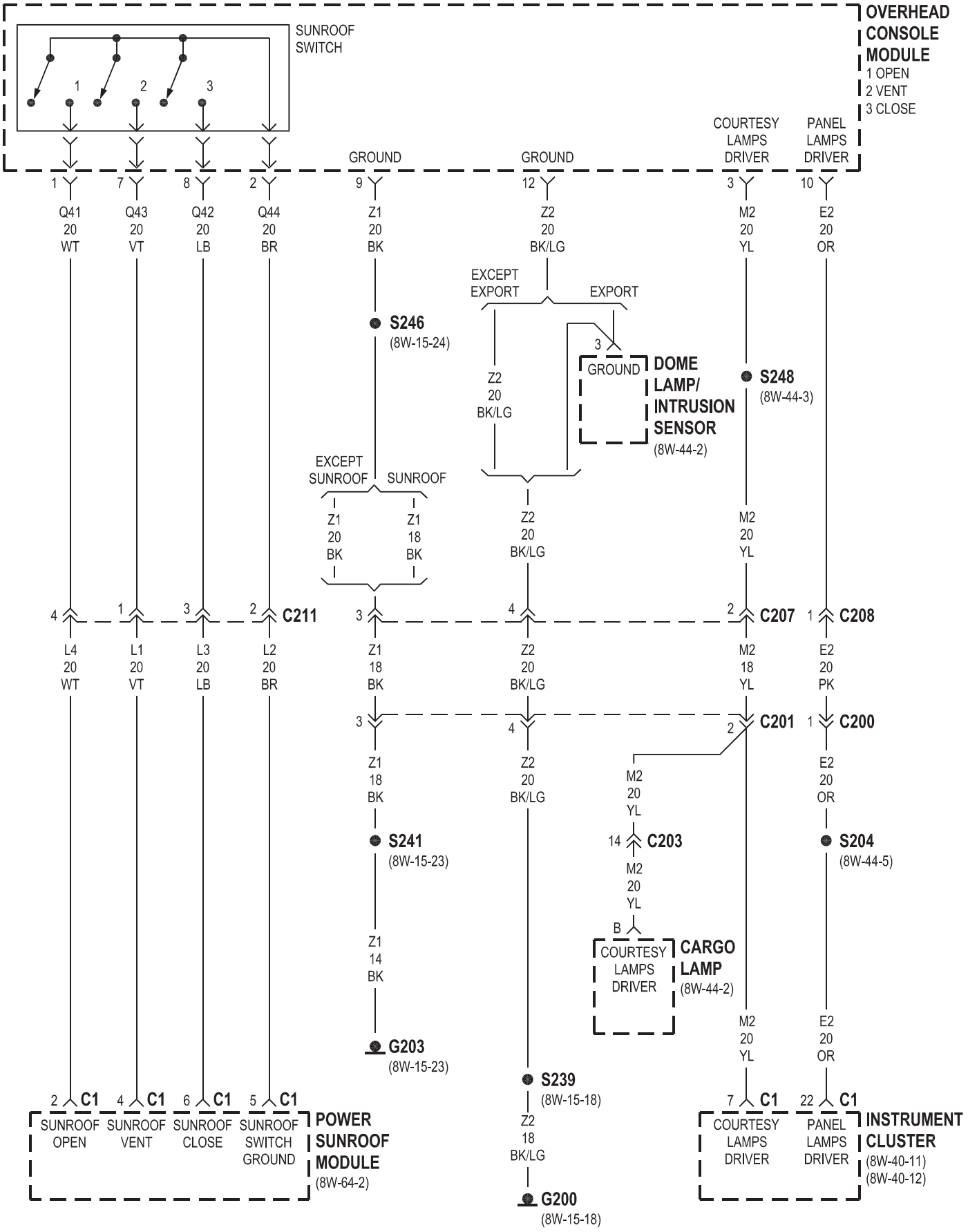
OVERHEAD CONSOLE MODULE
1 OPEN
2 VENT
3 CLOSE
SUNROOF SWITCH
1
2
3
GROUND
GROUND
COURTESY LAMPS DRIVER
PANEL LAMPS DRIVER
1 Q41 20 WT
7 Q43 20 VT
8 Q42 20 LB
2 Q44 20 BR
9 Z1 20 BK
12 Z2 20 BK/LG
3 M2 20 YL
10 E2 20 OR
EXCEPT EXPORT
EXPORT
S246 (8W-15-24)
3 GROUND
DOME LAMP/ INTRUSION SENSOR (8W-44-2)
Z2 20 BK/LG
S248 (8W-44-3)
EXCEPT SUNROOF
SUNROOF
Z1 20 BK
Z1 18 BK
Z2 20 BK/LG
M2 20 YL
4 1 3 2 C211
3 4 2 C207
1 C208
L4 20 WT
L1 20 VT
L3 20 LB
L2 20 BR
Z1 18 BK
Z2 20 BK/LG
M2 18 YL
E2 20 PK
3 4 2 C201
1 C200
Z1 18 BK
Z2 20 BK/LG
M2 20 YL
E2 20 OR
S241 (8W-15-23)
14 C203
S204 (8W-44-5)
M2 20 YL
B
COURTESY LAMPS DRIVER
CARGO LAMP (8W-44-2)
Z1 14 BK
G203 (8W-15-23)
M2 20 YL
E2 20 OR
S239 (8W-15-18)
2 C1
4 C1
6 C1
5 C1
SUNROOF OPEN
SUNROOF VENT
SUNROOF CLOSE
SUNROOF SWITCH GROUND
POWER SUNROOF MODULE (8W-64-2)
Z2 18 BK/LG
G200 (8W-15-18)
7 C1
22 C1
COURTESY LAMPS DRIVER
PANEL LAMPS DRIVER
INSTRUMENT CLUSTER (8W-40-11) (8W-40-12)

8W-50 FRONT LIGHTING

Component	Page
Fuse 1	8W-50-2
Fuse 2	8W-50-6, 10
Fuse 8	8W-50-8
Fuse 16/17	8W-50-4
Fuse 19	8W-50-3
Fuse 20	8W-50-3, 5
Fuse 22	8W-50-8
Fuse Block	8W-50-2, 3, 5, 6, 8, 10
G103	8W-50-3, 4, 7, 9, 10
G104	8W-50-3, 4, 6, 9, 10
G201	8W-50-2, 5
Headlamp Leveling Switch	8W-50-3, 5
Headlamp Relay	8W-50-2, 8
Headlamp Switch	8W-50-2, 6, 8, 9, 10
Instrument Cluster	8W-50-2, 5, 8, 10
Left City Lamp	8W-50-7
Left Fog Lamp	8W-50-9
Left Front Park/Turn Signal Lamp	8W-50-10
Left Headlamp Leveling Module	8W-50-7
Left High Beam Headlamp	8W-50-4
Left Low Beam Headlamp	8W-50-3
Power Distribution Center	8W-50-4, 8
Remote Keyless Entry Module	8W-50-2
Right City Lamp	8W-50-6
Right Fog Lamp	8W-50-9
Right Front Park/Turn Signal Lamp	8W-50-10
Right Headlamp Leveling Module	8W-50-6
Right High Beam Headlamp	8W-50-4
Right Low Beam Headlamp	8W-50-3

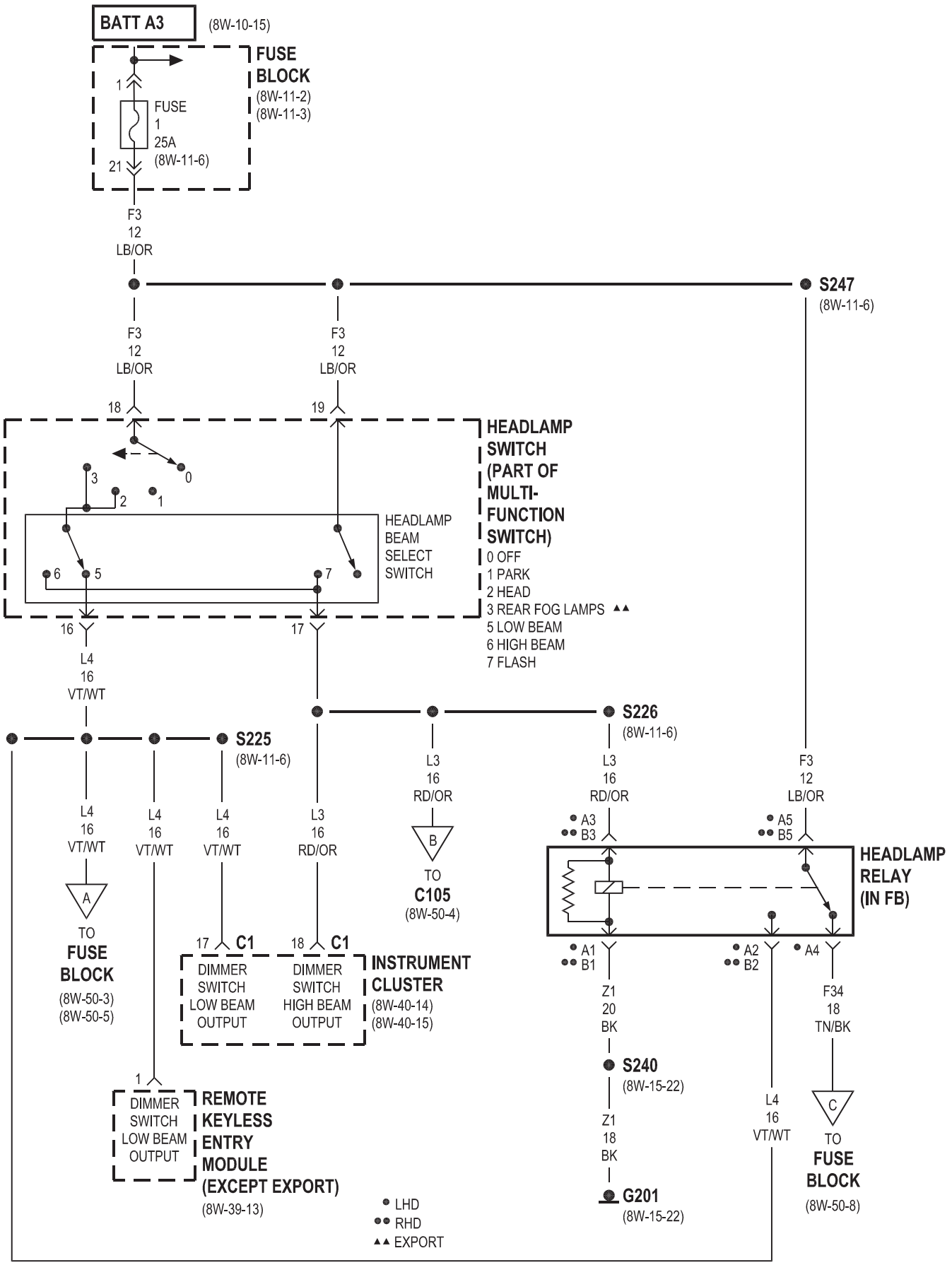
BATT A3
(8W-10-15)
FUSE BLOCK
(8W-11-2)
(8W-11-3)
1
FUSE 1 25A
(8W-11-6)
21
F3 12 LB/OR
S247
(8W-11-6)
F3 12 LB/OR
F3 12 LB/OR
18
19
HEADLAMP SWITCH (PART OF MULTI-FUNCTION SWITCH)
0 OFF
1 PARK
2 HEAD
3 REAR FOG LAMPS ▲▲
5 LOW BEAM
6 HIGH BEAM
7 FLASH
HEADLAMP BEAM SELECT SWITCH
16
17
L4 16 VT/WT
S226
(8W-11-6)
S225
(8W-11-6)
L3 16 RD/OR
L3 16 RD/OR
F3 12 LB/OR
L4 16 VT/WT
L4 16 VT/WT
L4 16 VT/WT
L3 16 RD/OR
TO C105
(8W-50-4)
A3
B3
A5
B5
HEADLAMP RELAY (IN FB)
TO FUSE BLOCK
(8W-50-3)
(8W-50-5)
17 C1
18 C1
DIMMER SWITCH LOW BEAM OUTPUT
DIMMER SWITCH HIGH BEAM OUTPUT
INSTRUMENT CLUSTER
(8W-40-14)
(8W-40-15)
A1
B1
A2
B2
A4
Z1 20 BK
F34 18 TN/BK
S240
(8W-15-22)
1
DIMMER SWITCH LOW BEAM OUTPUT
REMOTE KEYLESS ENTRY MODULE (EXCEPT EXPORT)
(8W-39-13)
Z1 18 BK
L4 16 VT/WT
TO FUSE BLOCK
(8W-50-8)
G201
(8W-15-22)
LHD
RHD
▲▲ EXPORT

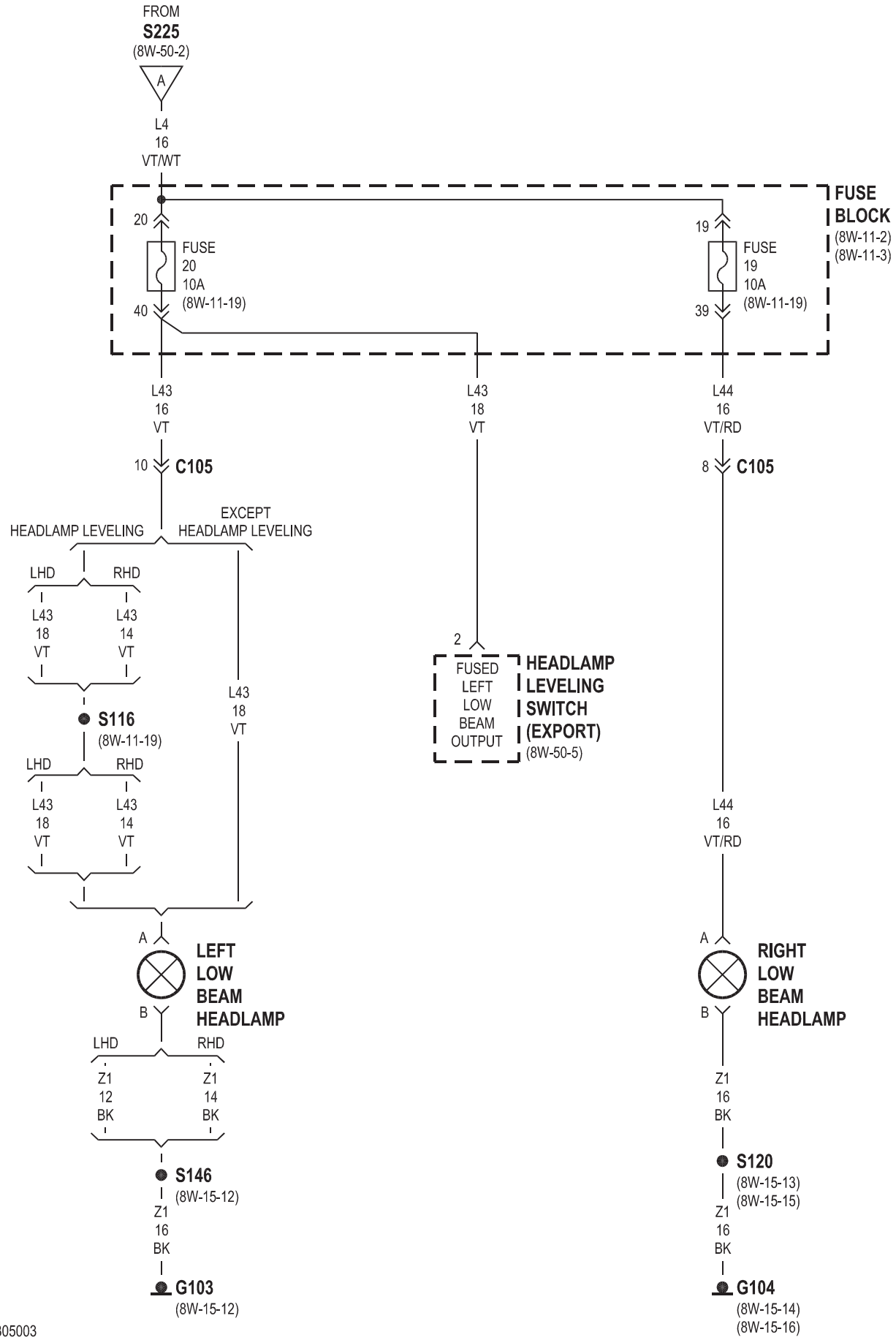
FROM
S225
(8W-50-2)
A
L4
16
VT/WT
FUSE BLOCK
(8W-11-2)
(8W-11-3)
20
FUSE
20
10A
(8W-11-19)
40
19
FUSE
19
10A
(8W-11-19)
39
L43
16
VT
L43
18
VT
L44
16
VT/RD
10
C105
8
C105
HEADLAMP LEVELING
EXCEPT
HEADLAMP LEVELING
LHD
RHD
L43
18
VT
L43
14
VT
S116
(8W-11-19)
L43
18
VT
2
FUSED
LEFT
LOW
BEAM
OUTPUT
HEADLAMP
LEVELING
SWITCH
(EXPORT)
(8W-50-5)
L44
16
VT/RD
A
B
LEFT
LOW
BEAM
HEADLAMP
RIGHT
LOW
BEAM
HEADLAMP
Z1
12
BK
Z1
14
BK
Z1
16
BK
S146
(8W-15-12)
S120
(8W-15-13)
(8W-15-15)
G103
(8W-15-12)
G104
(8W-15-14)
(8W-15-16)

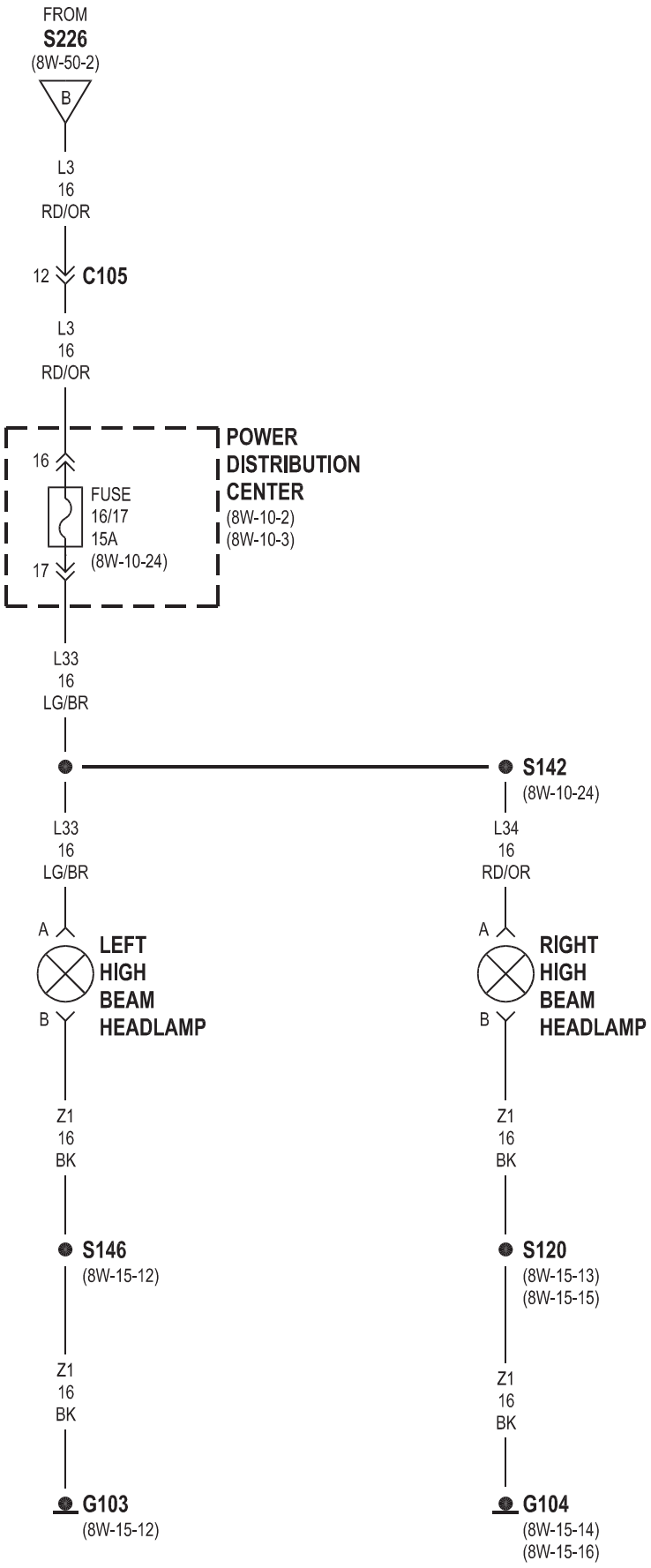
FROM
S226
(8W-50-2)
B
L3
16
RD/OR
12
C105
L3
16
RD/OR
16
FUSE
16/17
15A
(8W-10-24)
17
POWER
DISTRIBUTION
CENTER
(8W-10-2)
(8W-10-3)
L33
16
LG/BR
S142
(8W-10-24)
L33
16
LG/BR
L34
16
RD/OR
A
B
LEFT
HIGH
BEAM
HEADLAMP
A
B
RIGHT
HIGH
BEAM
HEADLAMP
Z1
16
BK
Z1
16
BK
S146
(8W-15-12)
S120
(8W-15-13)
(8W-15-15)
Z1
16
BK
Z1
16
BK
G103
(8W-15-12)
G104
(8W-15-14)
(8W-15-16)

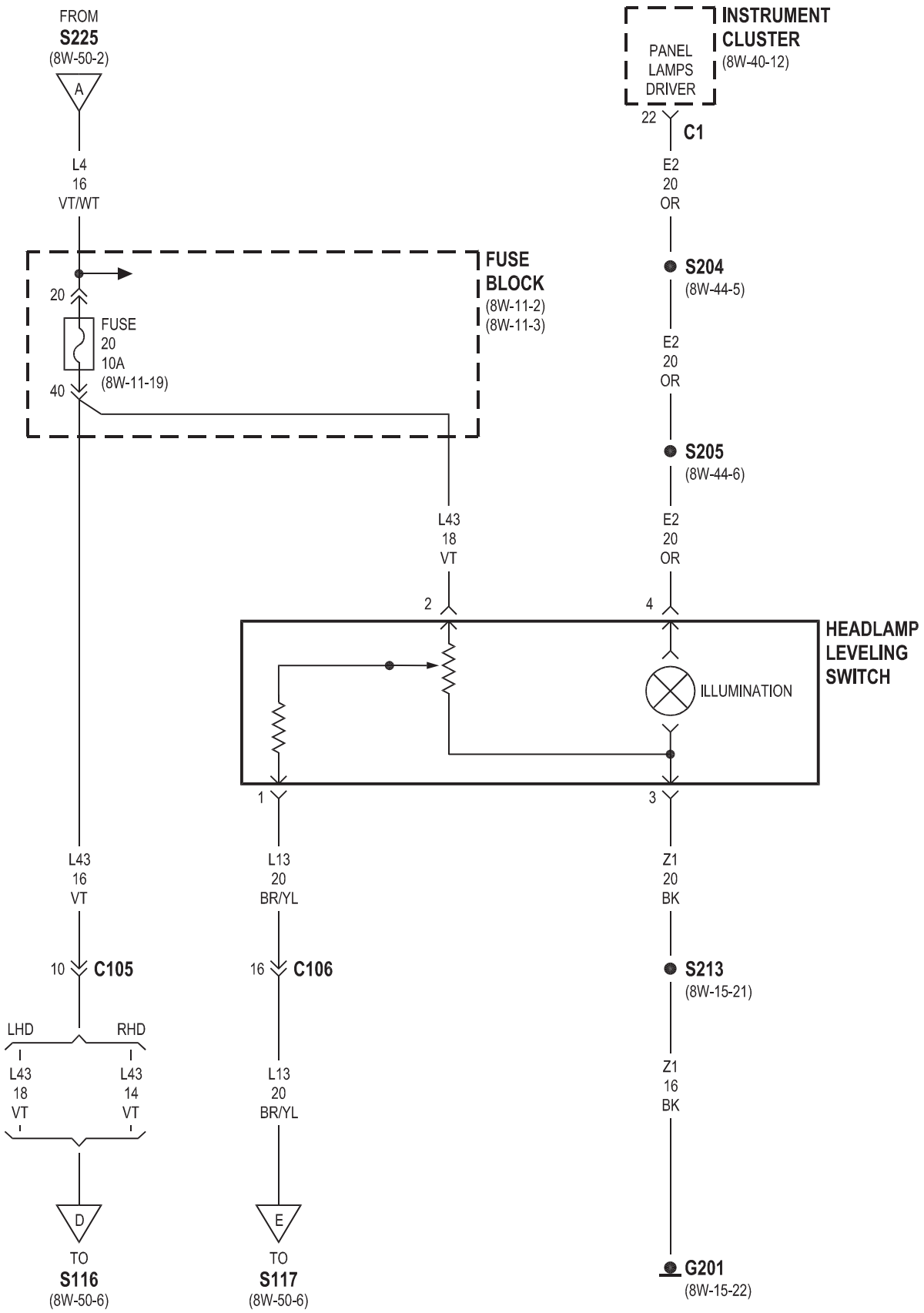
FROM
S225
(8W-50-2)
A
L4
16
VT/WT
INSTRUMENT
CLUSTER
(8W-40-12)
PANEL
LAMPS
DRIVER
22
C1
E2
20
OR
S204
(8W-44-5)
E2
20
OR
S205
(8W-44-6)
E2
20
OR
FUSE
BLOCK
(8W-11-2)
(8W-11-3)
20
FUSE
20
10A
(8W-11-19)
40
L43
18
VT
2
4
HEADLAMP
LEVELING
SWITCH
ILLUMINATION
1
3
L43
16
VT
L13
20
BR/YL
Z1
20
BK
10
C105
16
C106
S213
(8W-15-21)
LHD
RHD
L43
18
VT
L43
14
VT
L13
20
BR/YL
Z1
16
BK
D
E
TO
S116
(8W-50-6)
TO
S117
(8W-50-6)
G201
(8W-15-22)

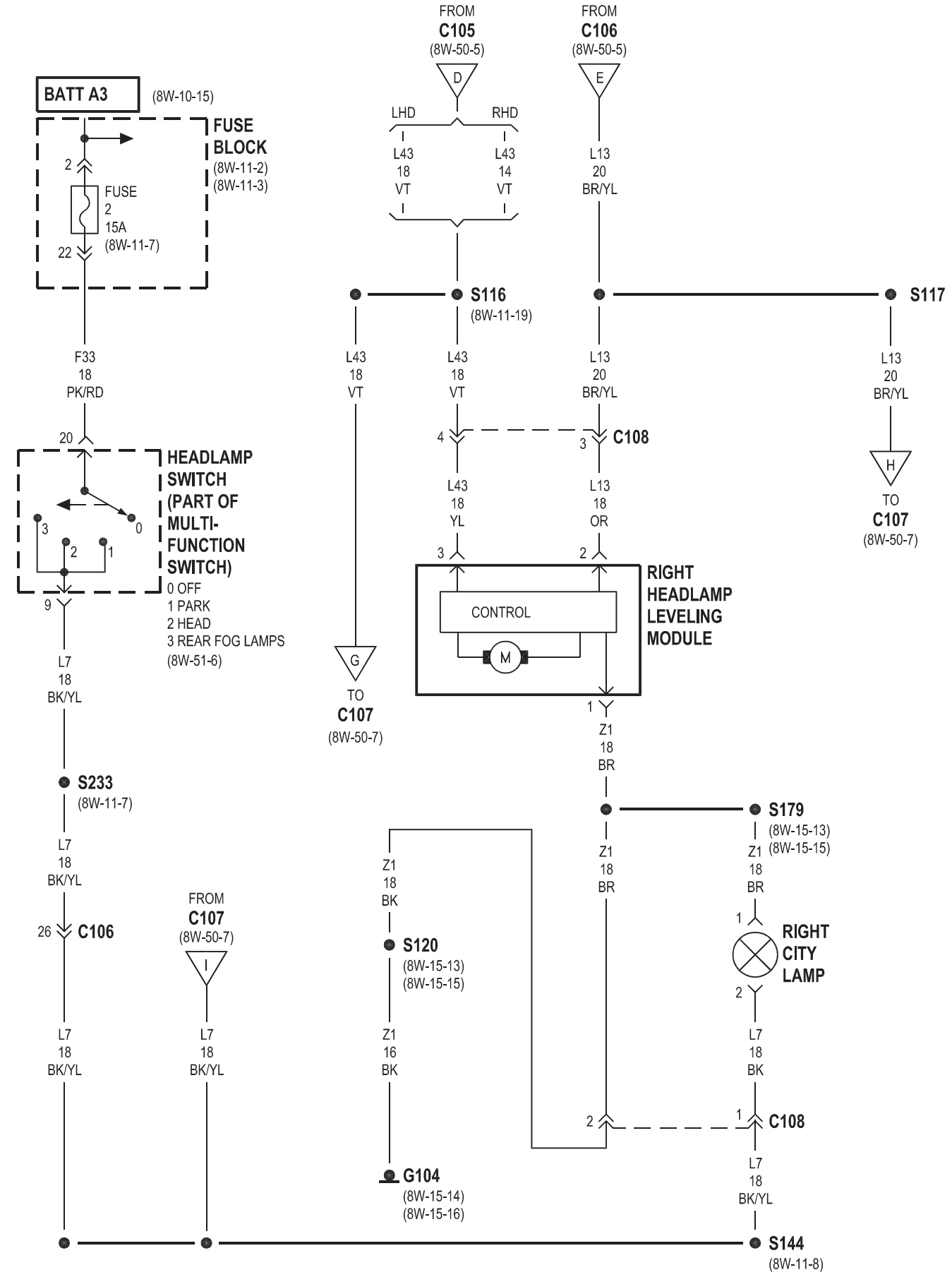
FROM
C105
(8W-50-5)
D
FROM
C106
(8W-50-5)
E
BATT A3
(8W-10-15)
FUSE
BLOCK
(8W-11-2)
(8W-11-3)
2
FUSE
2
15A
(8W-11-7)
22
LHD
RHD
L43
18
VT
L43
14
VT
L13
20
BR/YL
S116
(8W-11-19)
S117
F33
18
PK/RD
L43
18
VT
L43
18
VT
L13
20
BR/YL
L13
20
BR/YL
20
4
3
C108
HEADLAMP
SWITCH
(PART OF
MULTI-
FUNCTION
SWITCH)
0 OFF
1 PARK
2 HEAD
3 REAR FOG LAMPS
(8W-51-6)
3
0
2
1
9
L43
18
YL
L13
18
OR
3
2
H
TO
C107
(8W-50-7)
RIGHT
HEADLAMP
LEVELING
MODULE
CONTROL
M
G
TO
C107
(8W-50-7)
1
Z1
18
BR
L7
18
BK/YL
S233
(8W-11-7)
S179
(8W-15-13)
(8W-15-15)
L7
18
BK/YL
Z1
18
BR
Z1
18
BR
Z1
18
BK
26
C106
FROM
C107
(8W-50-7)
I
S120
(8W-15-13)
(8W-15-15)
1
RIGHT
CITY
LAMP
2
L7
18
BK/YL
L7
18
BK/YL
Z1
16
BK
L7
18
BK
2
1
C108
G104
(8W-15-14)
(8W-15-16)
L7
18
BK/YL
S144
(8W-11-8)

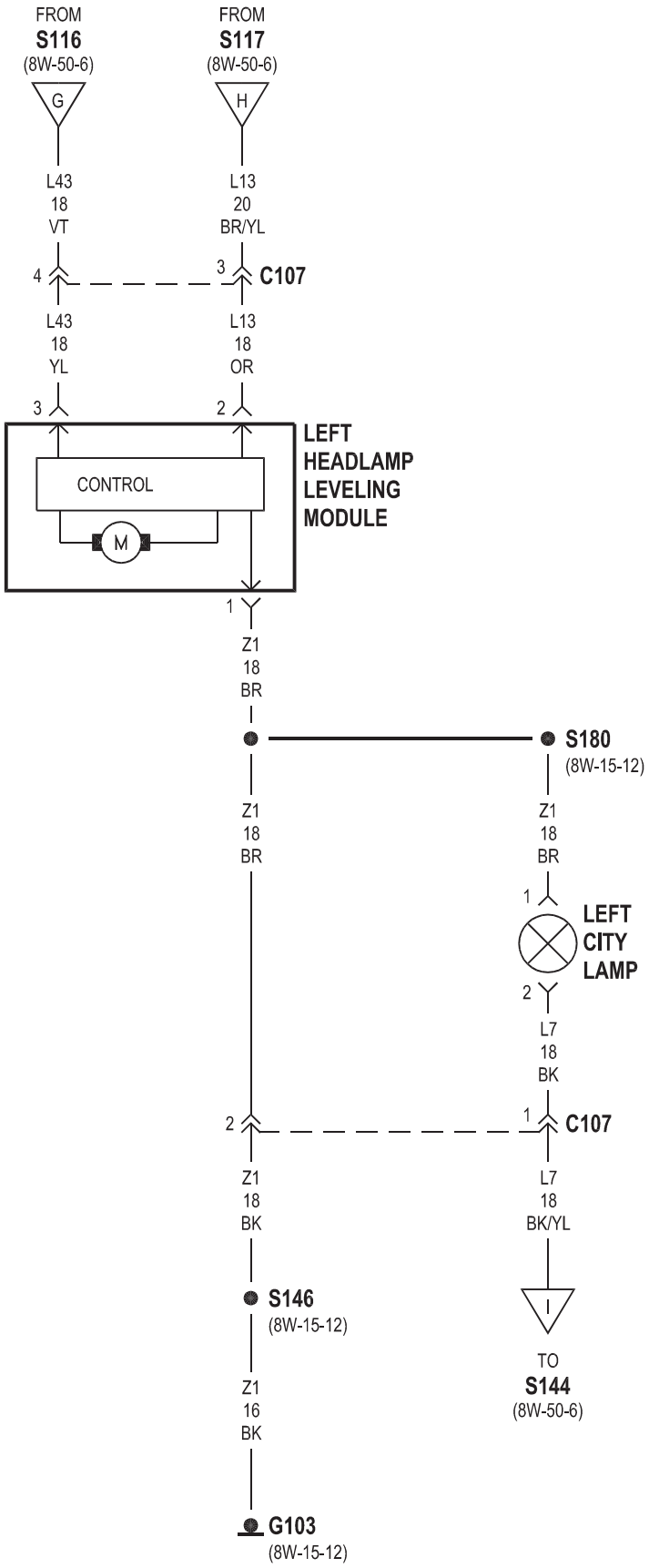
FROM
S116
(8W-50-6)
G
FROM
S117
(8W-50-6)
H
L43
18
VT
L13
20
BR/YL
4
3
C107
L43
18
YL
L13
18
OR
3
2
LEFT
HEADLAMP
LEVELING
MODULE
CONTROL
M
1
Z1
18
BR
S180
(8W-15-12)
Z1
18
BR
Z1
18
BR
1
LEFT
CITY
LAMP
2
L7
18
BK
2
1
C107
Z1
18
BK
L7
18
BK/YL
S146
(8W-15-12)
I
TO
S144
(8W-50-6)
Z1
16
BK
G103
(8W-15-12)

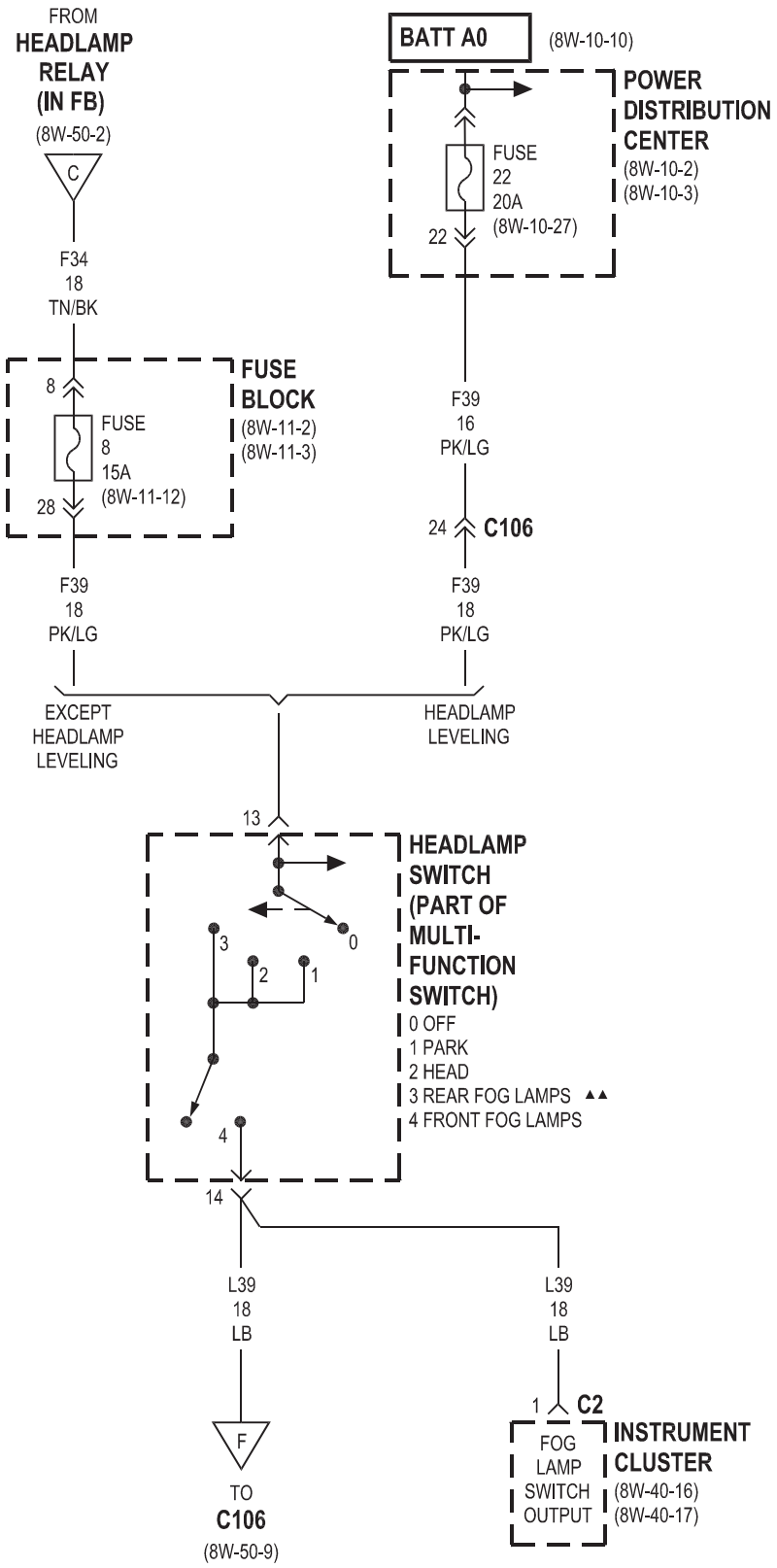
FROM
HEADLAMP
RELAY
(IN FB)
(8W-50-2)
C
F34
18
TN/BK
BATT A0
(8W-10-10)
POWER
DISTRIBUTION
CENTER
(8W-10-2)
(8W-10-3)
FUSE
22
20A
(8W-10-27)
22
8
FUSE
8
15A
(8W-11-12)
28
FUSE
BLOCK
(8W-11-2)
(8W-11-3)
F39
16
PK/LG
24
C106
F39
18
PK/LG
F39
18
PK/LG
EXCEPT
HEADLAMP
LEVELING
HEADLAMP
LEVELING
13
HEADLAMP
SWITCH
(PART OF
MULTI-
FUNCTION
SWITCH)
0 OFF
1 PARK
2 HEAD
3 REAR FOG LAMPS ▲▲
4 FRONT FOG LAMPS
0
1
2
3
4
14
L39
18
LB
L39
18
LB
F
TO
C106
(8W-50-9)
1
C2
FOG
LAMP
SWITCH
OUTPUT
INSTRUMENT
CLUSTER
(8W-40-16)
(8W-40-17)

▲▲ EXPORT

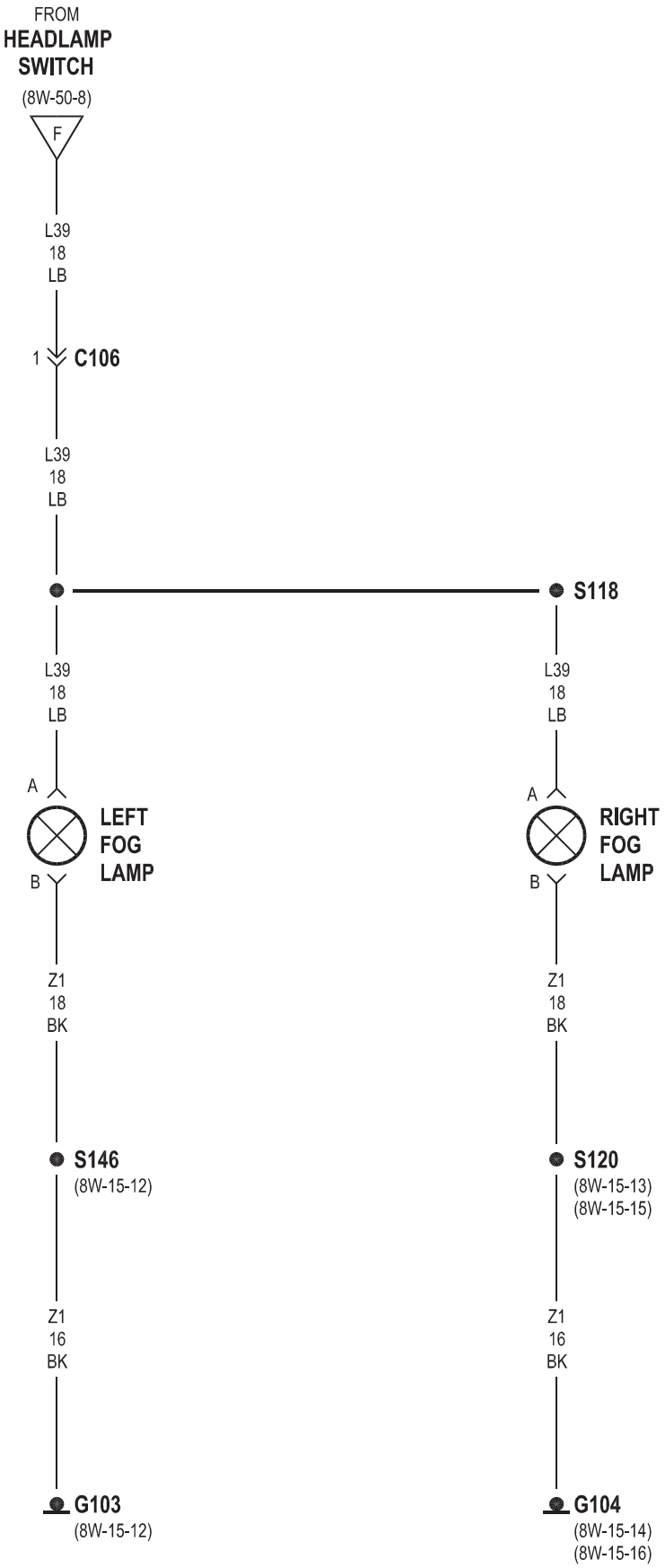
FROM
HEADLAMP
SWITCH
(8W-50-8)
F
L39
18
LB
1
C106
L39
18
LB
S118
L39
18
LB
L39
18
LB
A
LEFT
FOG
LAMP
B
A
RIGHT
FOG
LAMP
B
Z1
18
BK
Z1
18
BK
S146
(8W-15-12)
S120
(8W-15-13)
(8W-15-15)
Z1
16
BK
Z1
16
BK
G103
(8W-15-12)
G104
(8W-15-14)
(8W-15-16)

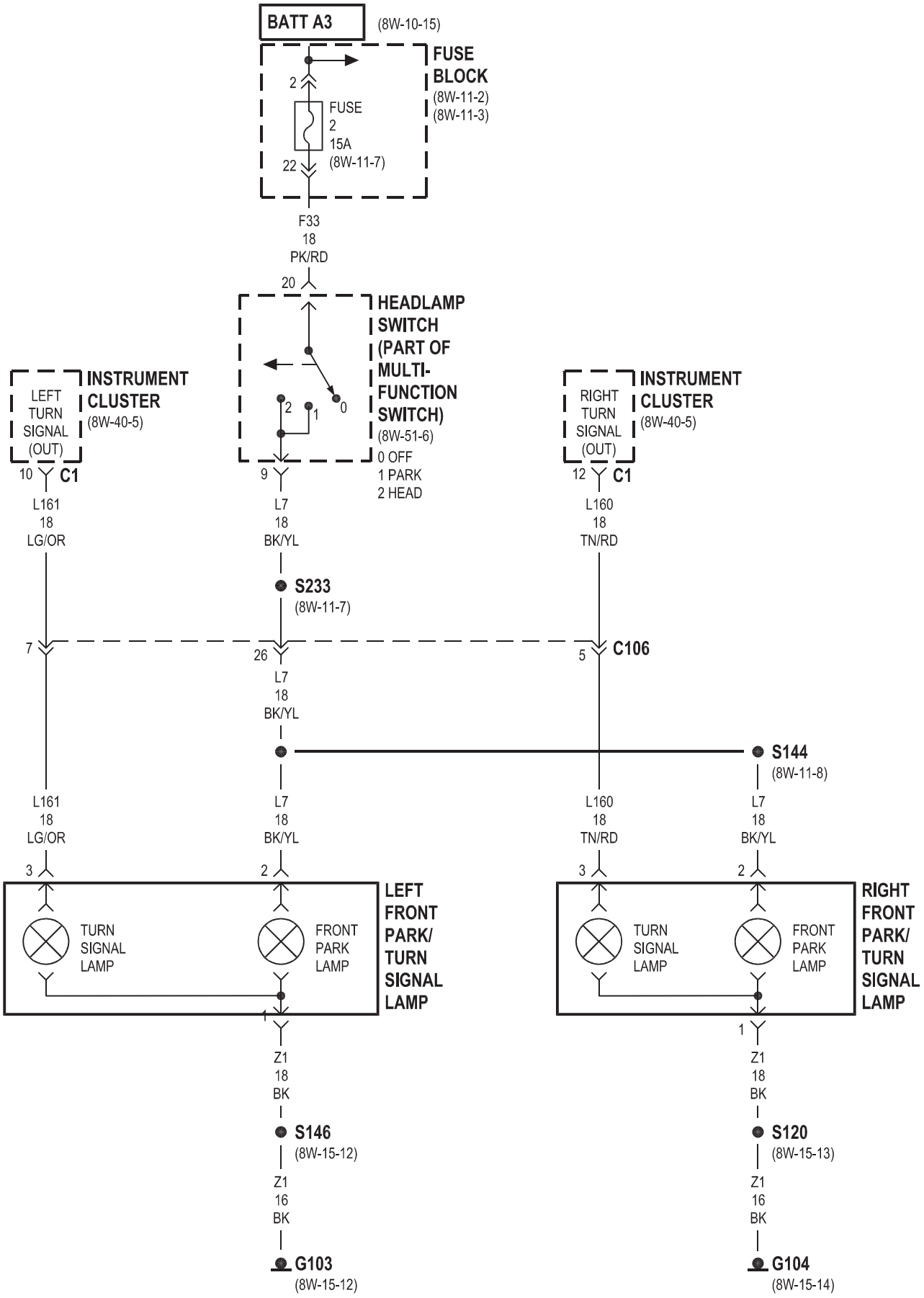
BATT A3
(8W-10-15)
FUSE BLOCK
(8W-11-2)
(8W-11-3)
2
FUSE 2 15A
(8W-11-7)
22
F33
18
PK/RD
20
HEADLAMP SWITCH (PART OF MULTI-FUNCTION SWITCH)
(8W-51-6)
2
1
0
0 OFF
1 PARK
2 HEAD
INSTRUMENT CLUSTER
(8W-40-5)
LEFT TURN SIGNAL (OUT)
10
C1
L161
18
LG/OR
9
L7
18
BK/YL
INSTRUMENT CLUSTER
(8W-40-5)
RIGHT TURN SIGNAL (OUT)
12
C1
L160
18
TN/RD
S233
(8W-11-7)
7
26
5
C106
L7
18
BK/YL
S144
(8W-11-8)
L161
18
LG/OR
L7
18
BK/YL
L160
18
TN/RD
L7
18
BK/YL
3
2
3
2
TURN SIGNAL LAMP
FRONT PARK LAMP
LEFT FRONT PARK/ TURN SIGNAL LAMP
TURN SIGNAL LAMP
FRONT PARK LAMP
RIGHT FRONT PARK/ TURN SIGNAL LAMP
1
1
Z1
18
BK
Z1
18
BK
S146
(8W-15-12)
S120
(8W-15-13)
Z1
16
BK
Z1
16
BK
G103
(8W-15-12)
G104
(8W-15-14)

8W-51 REAR LIGHTING

Component	Page
Back-Up Lamp Switch	8W-51-2
Brake Lamp Switch	8W-51-4
Center High Mounted Stop Lamp	8W-51-5
Controller Antilock Brake	8W-51-4
Fuse 2	8W-51-4, 6
Fuse 6	8W-51-2
Fuse 12	8W-51-4
Fuse 15	8W-51-8
Fuse 19	8W-51-8
Fuse 22	8W-51-2
Fuse Block	8W-51-2, 4, 6, 8
G200	8W-51-8
G300	8W-51-3, 5, 7, 9
G301	8W-51-5, 9
Headlamp Switch	8W-51-2, 3, 4, 6
Instrument Cluster	8W-51-2, 3
Left Back-Up Lamp	8W-51-3
Left License Lamp	8W-51-7
Left Rear Fog Lamp	8W-51-3
Left Rear Turn Signal Lamp	8W-51-9
Left Tail/Stop Lamp	8W-51-5
Left Tail/Stop Lamp	8W-51-4
License Lamp	8W-51-7
Multi-Function Switch	8W-51-8, 9
Power Distribution Center	8W-51-2, 4, 8
Remote Keyless Entry Module	8W-51-9
Right Back-Up Lamp	8W-51-3
Right license Lamp	8W-51-7
Right Rear Fog Lamp	8W-51-3
Right Rear Turn Signal Lamp	8W-51-9
Right Tail/Stop Lamp	8W-51-4, 5
Stop Lamp	8W-51-5
Tail Lamp	8W-51-5
Transmission Range Sensor	8W-51-2

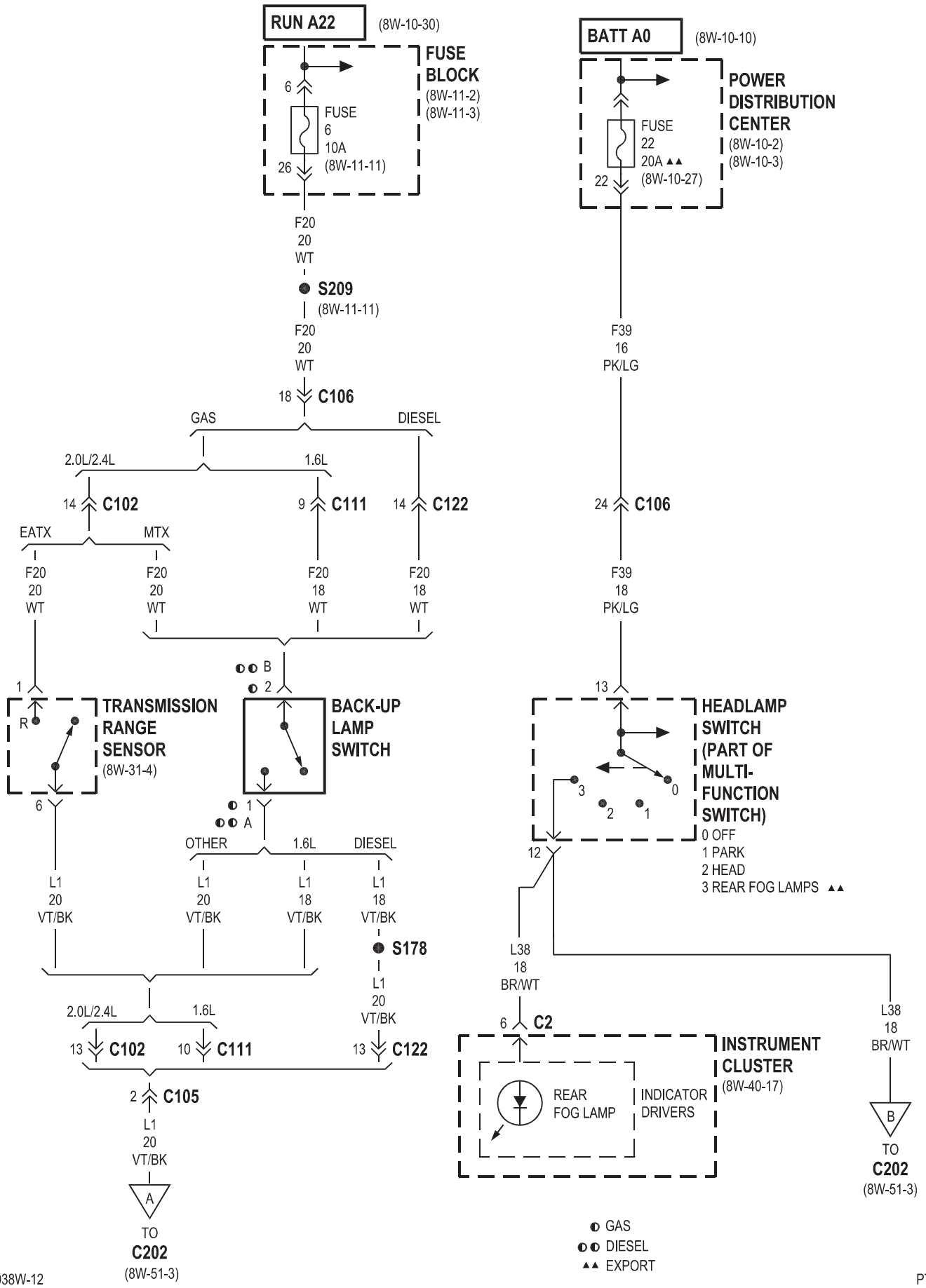
RUN A22
(8W-10-30)
FUSE BLOCK
(8W-11-2)
(8W-11-3)
6
FUSE 6 10A
(8W-11-11)
26
F20 20 WT
S209
(8W-11-11)
F20 20 WT
18 C106
GAS
DIESEL
2.0L/2.4L
1.6L
14 C102
9 C111
14 C122
EATX
MTX
F20 20 WT
F20 20 WT
F20 18 WT
F20 18 WT
B
2
1
R
TRANSMISSION RANGE SENSOR
(8W-31-4)
6
BACK-UP LAMP SWITCH
1
A
OTHER
1.6L
DIESEL
L1 20 VT/BK
L1 20 VT/BK
L1 18 VT/BK
L1 18 VT/BK
S178
L1 20 VT/BK
2.0L/2.4L
1.6L
13 C102
10 C111
13 C122
2 C105
L1 20 VT/BK
A
TO C202
(8W-51-3)
BATT A0
(8W-10-10)
POWER DISTRIBUTION CENTER
(8W-10-2)
(8W-10-3)
FUSE 22 20A ▲▲
(8W-10-27)
22
F39 16 PK/LG
24 C106
F39 18 PK/LG
13
HEADLAMP SWITCH (PART OF MULTI-FUNCTION SWITCH)
0 OFF
1 PARK
2 HEAD
3 REAR FOG LAMPS ▲▲
3
2
1
0
12
L38 18 BR/WT
6 C2
INSTRUMENT CLUSTER
(8W-40-17)
REAR FOG LAMP
INDICATOR DRIVERS
L38 18 BR/WT
B
TO C202
(8W-51-3)
GAS
DIESEL
▲▲ EXPORT

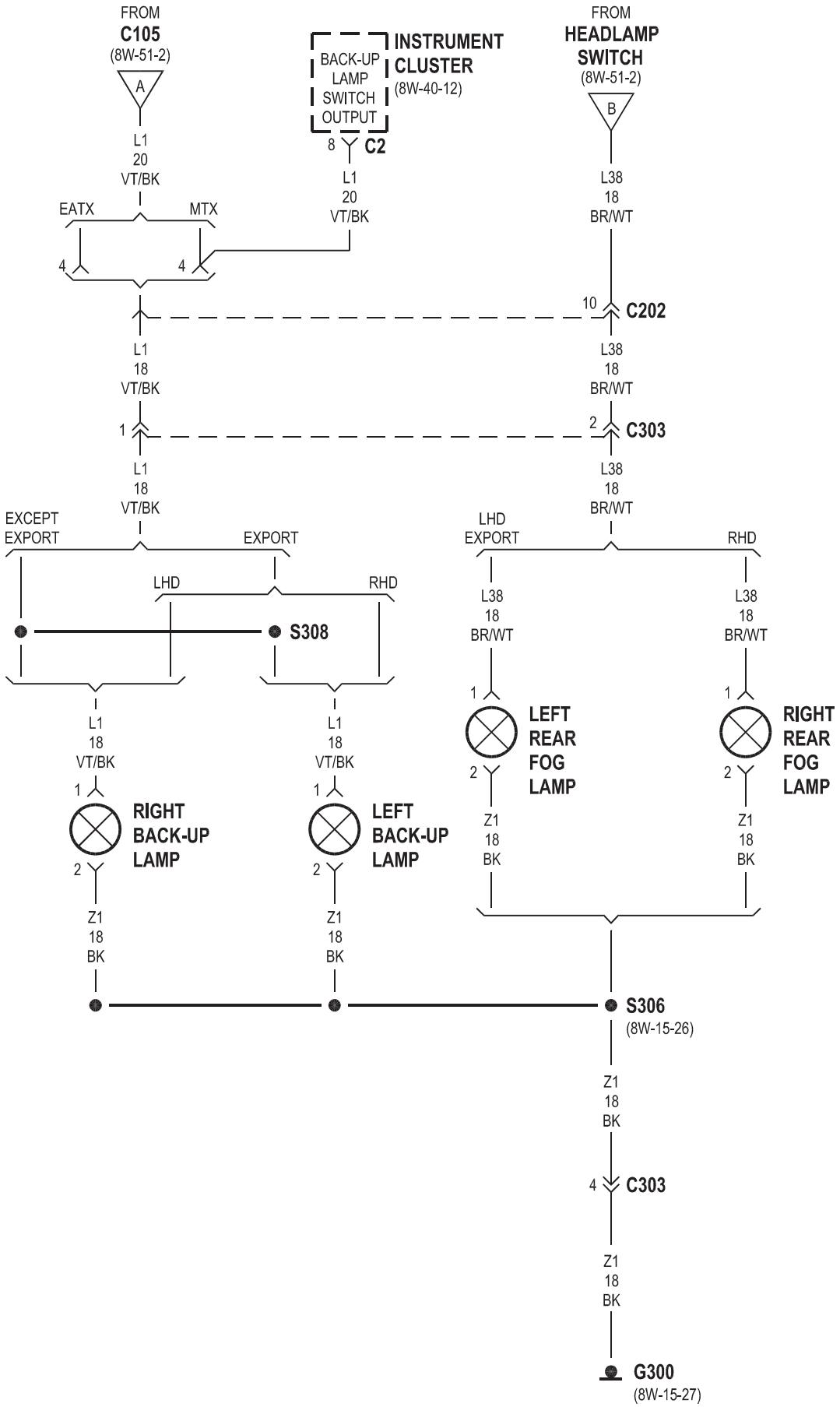
FROM
C105
(8W-51-2)
A
L1
20
VT/BK
EATX
MTX
4
4
BACK-UP
LAMP
SWITCH
OUTPUT
INSTRUMENT
CLUSTER
(8W-40-12)
8
C2
L1
20
VT/BK
FROM
HEADLAMP
SWITCH
(8W-51-2)
B
L38
18
BR/WT
10
C202
L1
18
VT/BK
L38
18
BR/WT
1
2
C303
L1
18
VT/BK
L38
18
BR/WT
EXCEPT
EXPORT
EXPORT
LHD
RHD
S308
LHD
EXPORT
RHD
L38
18
BR/WT
L38
18
BR/WT
L1
18
VT/BK
L1
18
VT/BK
1
RIGHT
BACK-UP
LAMP
2
1
LEFT
BACK-UP
LAMP
2
1
LEFT
REAR
FOG
LAMP
2
1
RIGHT
REAR
FOG
LAMP
2
Z1
18
BK
Z1
18
BK
Z1
18
BK
Z1
18
BK
S306
(8W-15-26)
Z1
18
BK
4
C303
Z1
18
BK
G300
(8W-15-27)

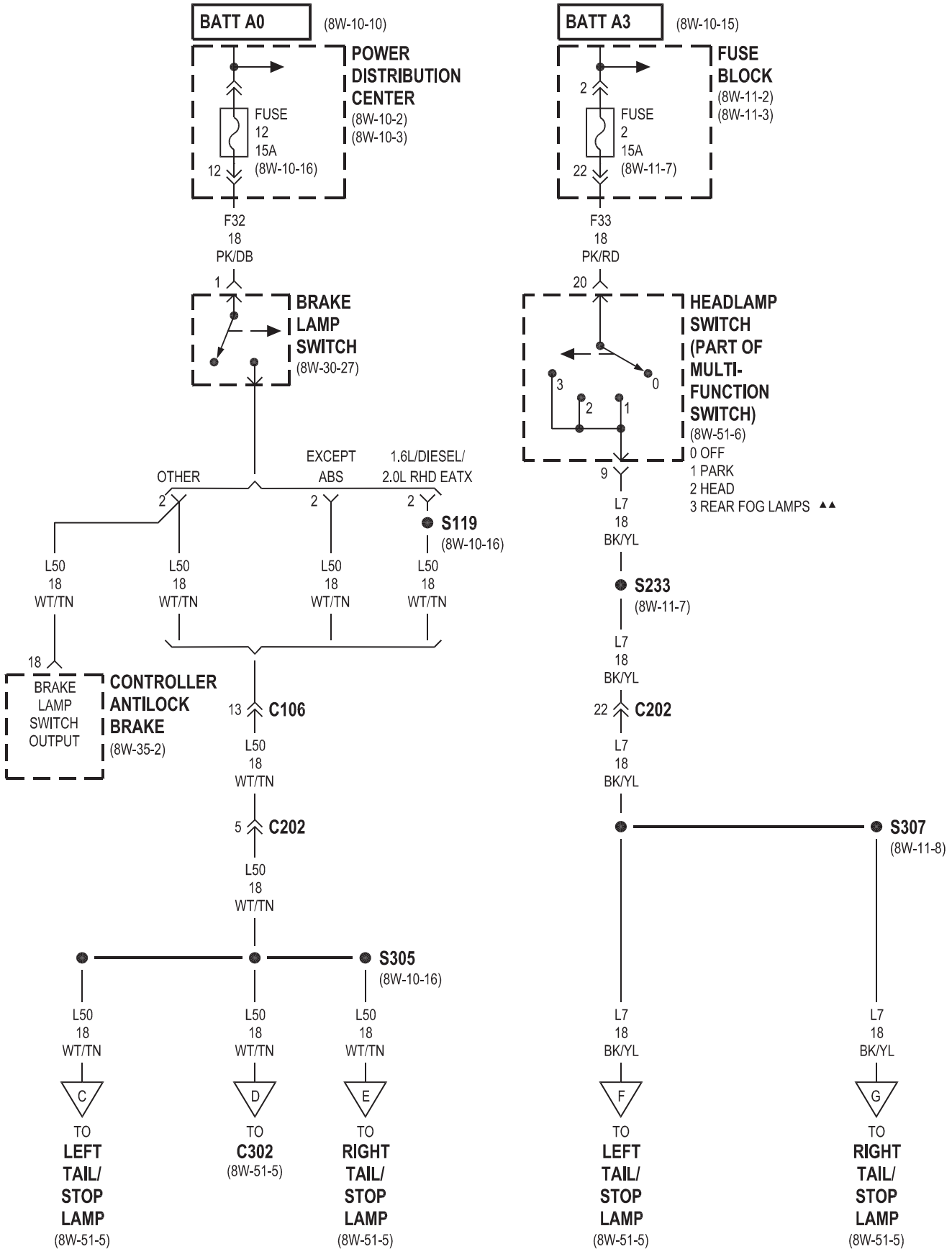
BATT A0
(8W-10-10)
POWER DISTRIBUTION CENTER
(8W-10-2)
(8W-10-3)
FUSE 12 15A
(8W-10-16)
12
F32 18 PK/DB
1
BRAKE LAMP SWITCH
(8W-30-27)
OTHER
EXCEPT ABS
1.6L/DIESEL/ 2.0L RHD EATX
2
S119
(8W-10-16)
L50 18 WT/TN
18
BRAKE LAMP SWITCH OUTPUT
CONTROLLER ANTILOCK BRAKE
(8W-35-2)
13
C106
5
C202
S305
(8W-10-16)
C
D
E
TO LEFT TAIL/ STOP LAMP
(8W-51-5)
TO C302
(8W-51-5)
TO RIGHT TAIL/ STOP LAMP
(8W-51-5)
BATT A3
(8W-10-15)
FUSE BLOCK
(8W-11-2)
(8W-11-3)
FUSE 2 15A
(8W-11-7)
22
F33 18 PK/RD
20
HEADLAMP SWITCH (PART OF MULTI-FUNCTION SWITCH)
(8W-51-6)
0 OFF
1 PARK
2 HEAD
3 REAR FOG LAMPS ▲▲
9
L7 18 BK/YL
S233
(8W-11-7)
C202
S307
(8W-11-8)
F
G
TO LEFT TAIL/ STOP LAMP
(8W-51-5)
TO RIGHT TAIL/ STOP LAMP
(8W-51-5)

▲▲ EXPORT

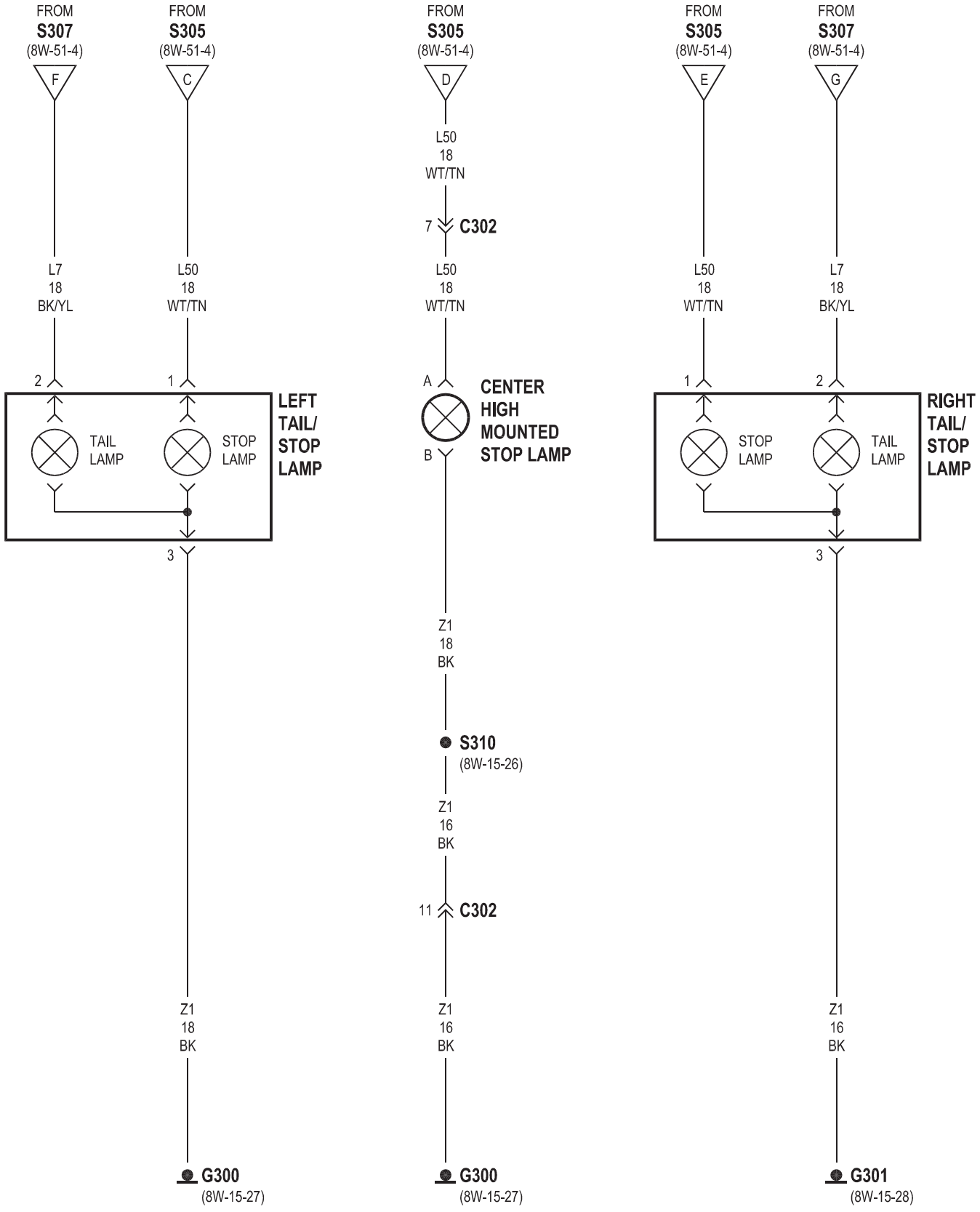
FROM
S307
(8W-51-4)
F
FROM
S305
(8W-51-4)
C
L7
18
BK/YL
L50
18
WT/TN
2
1
TAIL
LAMP
STOP
LAMP
LEFT
TAIL/
STOP
LAMP
3
Z1
18
BK
G300
(8W-15-27)
FROM
S305
(8W-51-4)
D
L50
18
WT/TN
7
C302
L50
18
WT/TN
A
B
CENTER
HIGH
MOUNTED
STOP LAMP
Z1
18
BK
S310
(8W-15-26)
Z1
16
BK
11
C302
Z1
16
BK
G300
(8W-15-27)
FROM
S305
(8W-51-4)
E
FROM
S307
(8W-51-4)
G
L50
18
WT/TN
L7
18
BK/YL
1
2
STOP
LAMP
TAIL
LAMP
RIGHT
TAIL/
STOP
LAMP
3
Z1
16
BK
G301
(8W-15-28)

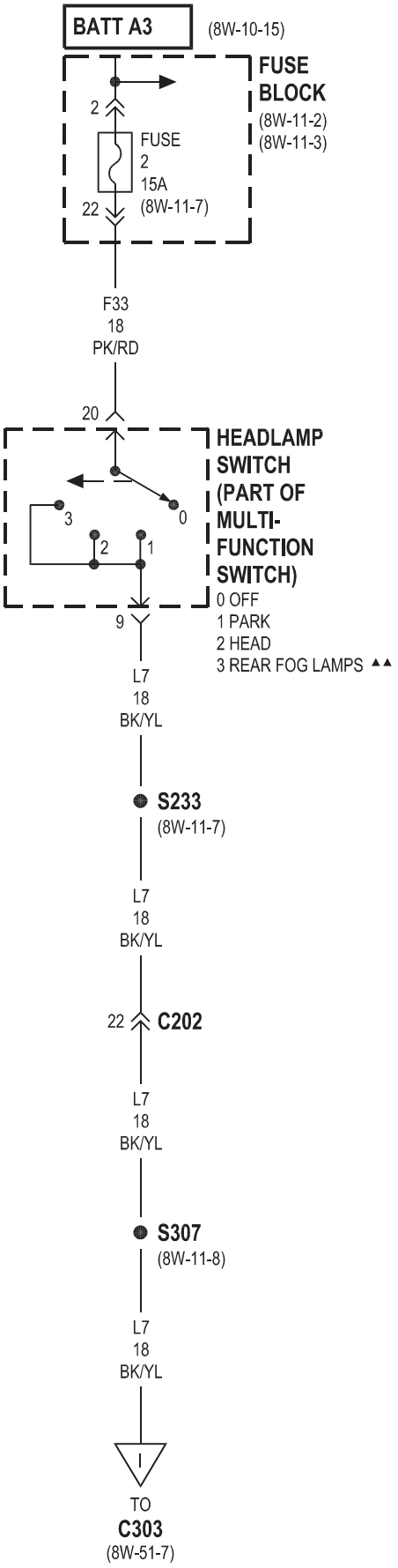
BATT A3
(8W-10-15)
FUSE BLOCK
(8W-11-2)
(8W-11-3)
2
FUSE
2
15A
(8W-11-7)
22
F33
18
PK/RD
20
HEADLAMP SWITCH (PART OF MULTI-FUNCTION SWITCH)
3
0
2
1
9
0 OFF
1 PARK
2 HEAD
3 REAR FOG LAMPS ▲▲
L7
18
BK/YL
S233
(8W-11-7)
L7
18
BK/YL
22
C202
L7
18
BK/YL
S307
(8W-11-8)
L7
18
BK/YL
I
TO
C303
(8W-51-7)

▲▲ EXPORT

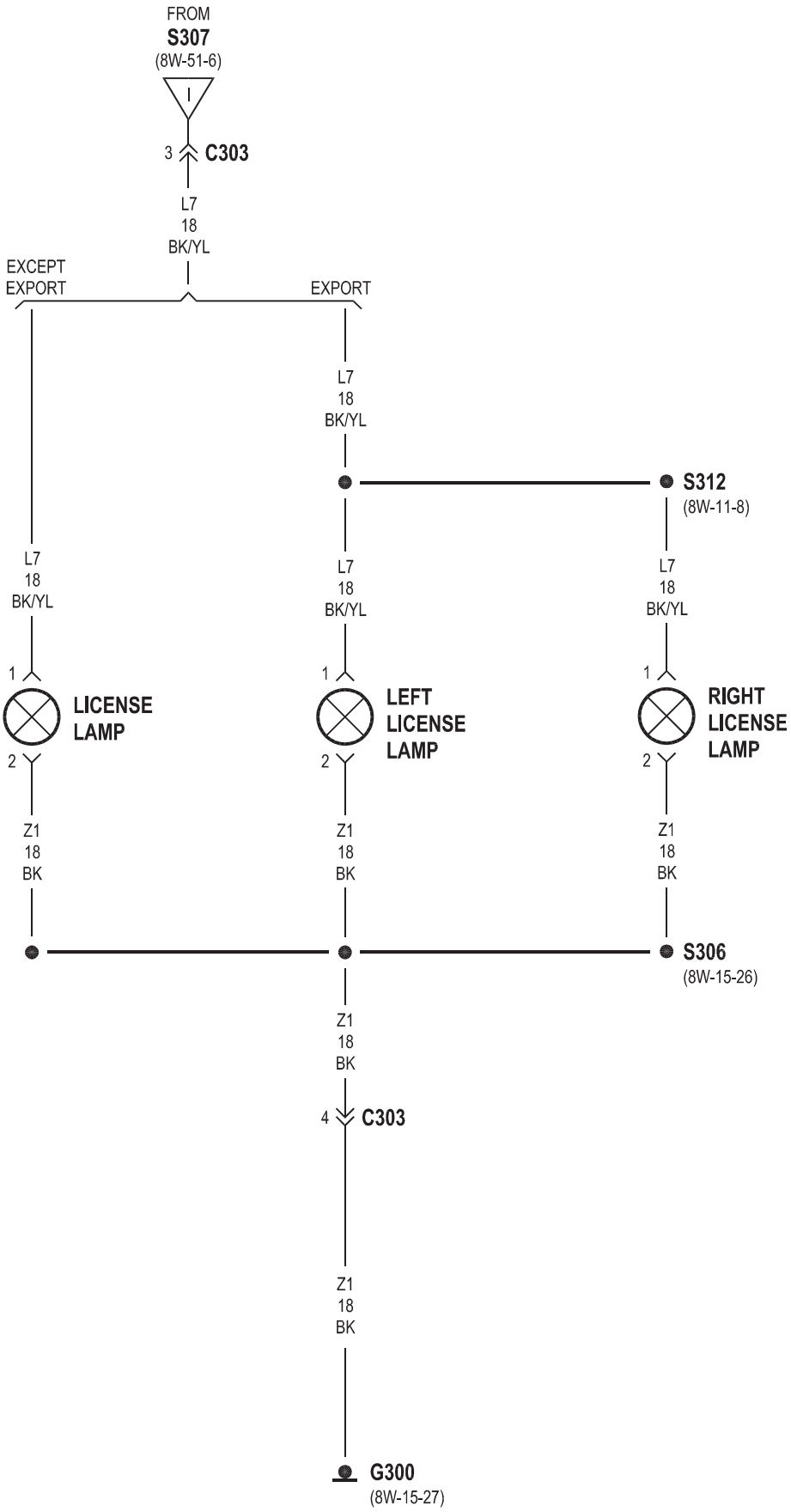
FROM
S307
(8W-51-6)
I
3
C303
L7
18
BK/YL
EXCEPT
EXPORT
EXPORT
L7
18
BK/YL
S312
(8W-11-8)
L7
18
BK/YL
L7
18
BK/YL
L7
18
BK/YL
1
LICENSE
LAMP
2
1
LEFT
LICENSE
LAMP
2
1
RIGHT
LICENSE
LAMP
2
Z1
18
BK
Z1
18
BK
Z1
18
BK
S306
(8W-15-26)
Z1
18
BK
4
C303
Z1
18
BK
G300
(8W-15-27)

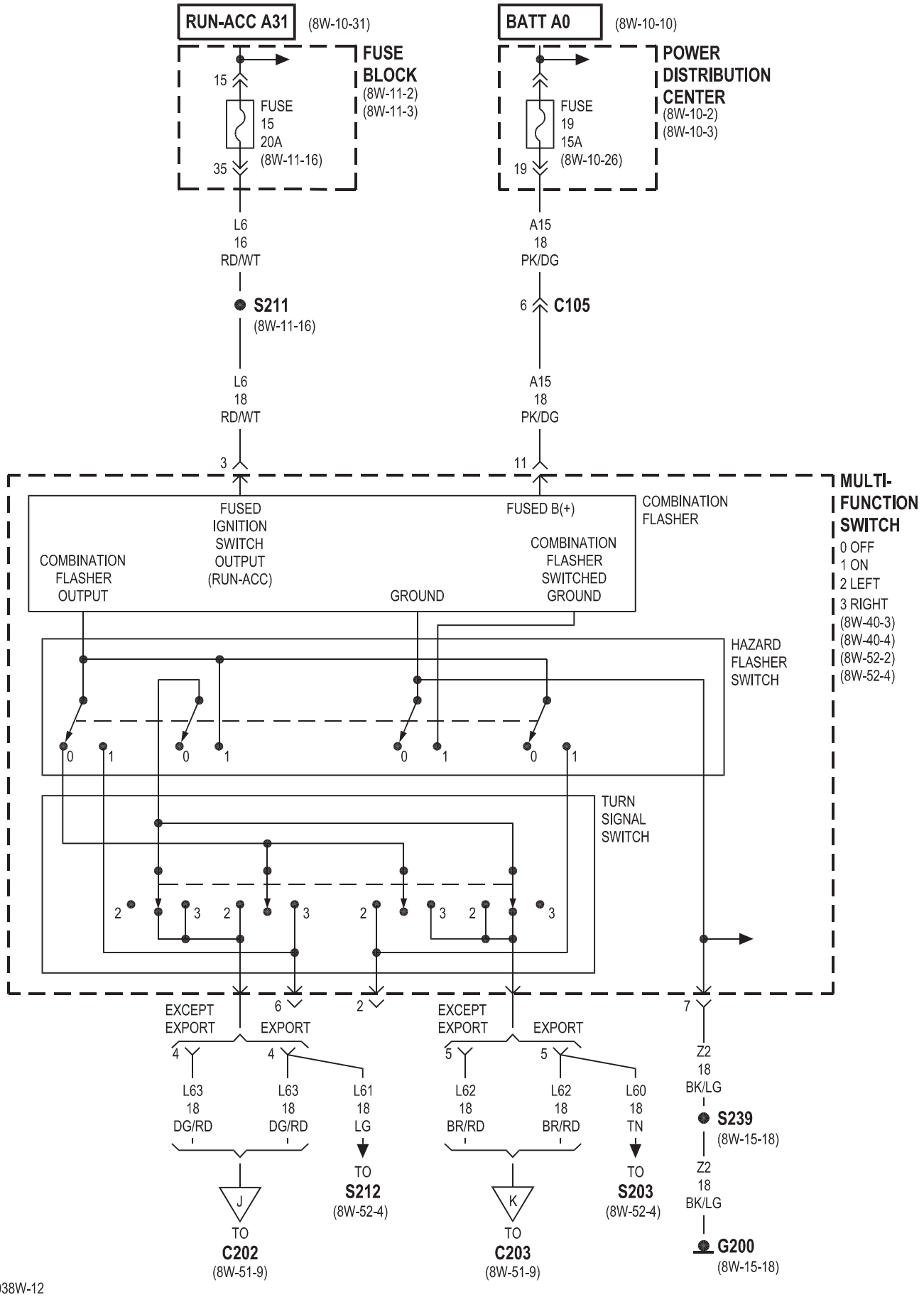
RUN-ACC A31
(8W-10-31)
BATT A0
(8W-10-10)
FUSE BLOCK
(8W-11-2)
(8W-11-3)
15
FUSE 15 20A
(8W-11-16)
35
POWER DISTRIBUTION CENTER
(8W-10-2)
(8W-10-3)
FUSE 19 15A
(8W-10-26)
19
L6 16 RD/WT
A15 18 PK/DG
S211
(8W-11-16)
6
C105
L6 18 RD/WT
A15 18 PK/DG
3
11
MULTI-FUNCTION SWITCH
0 OFF
1 ON
2 LEFT
3 RIGHT
(8W-40-3)
(8W-40-4)
(8W-52-2)
(8W-52-4)
COMBINATION FLASHER
FUSED IGNITION SWITCH OUTPUT (RUN-ACC)
FUSED B(+)
COMBINATION FLASHER OUTPUT
GROUND
COMBINATION FLASHER SWITCHED GROUND
HAZARD FLASHER SWITCH
TURN SIGNAL SWITCH
EXCEPT EXPORT
EXPORT
EXCEPT EXPORT
EXPORT
L63 18 DG/RD
L63 18 DG/RD
L61 18 LG
L62 18 BR/RD
L62 18 BR/RD
L60 18 TN
Z2 18 BK/LG
S239
(8W-15-18)
Z2 18 BK/LG
G200
(8W-15-18)
TO S212
(8W-52-4)
TO S203
(8W-52-4)
J
TO C202
(8W-51-9)
K
TO C203
(8W-51-9)

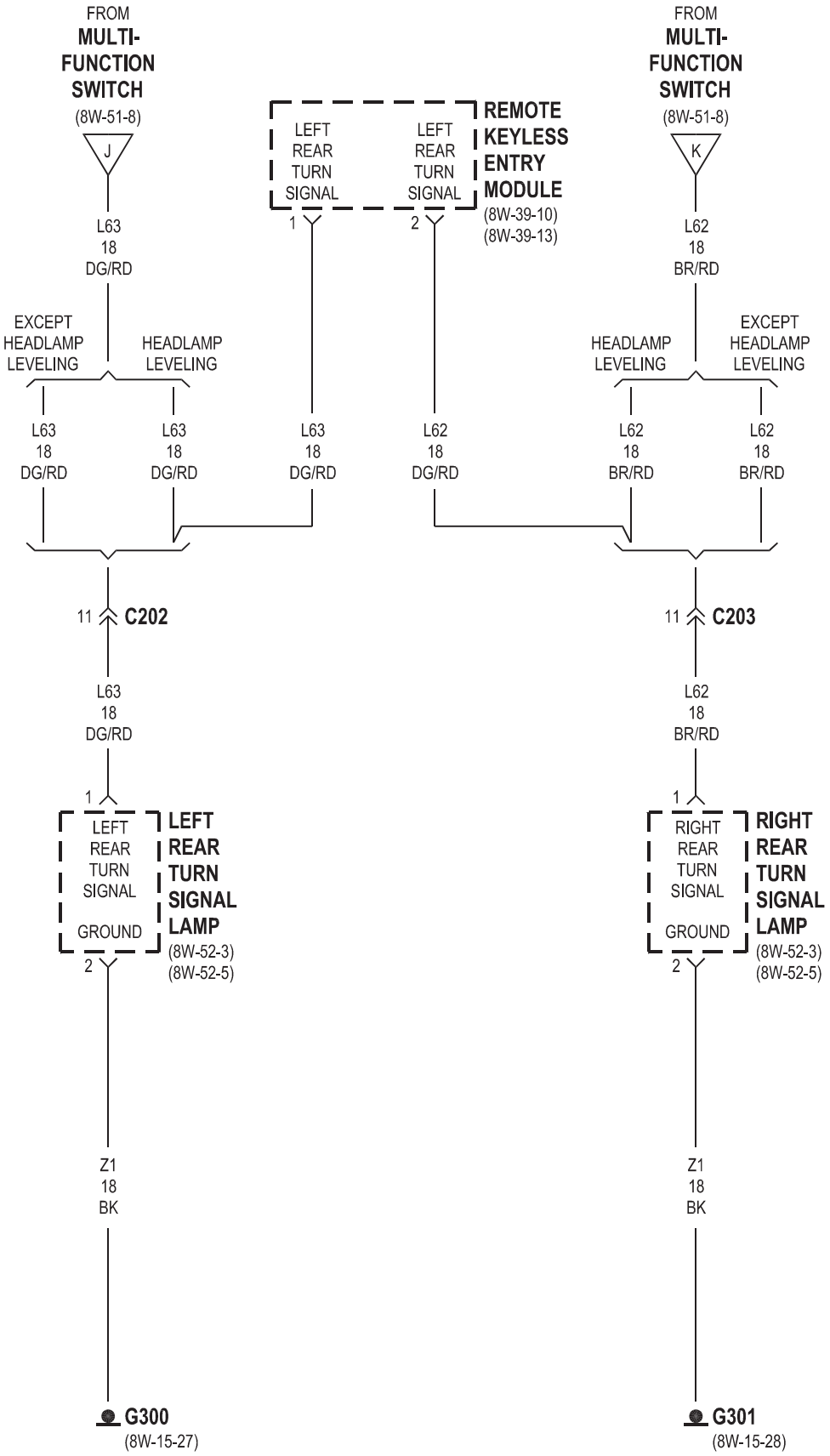
FROM
MULTI-
FUNCTION
SWITCH
(8W-51-8)
J
L63
18
DG/RD
EXCEPT
HEADLAMP
LEVELING
HEADLAMP
LEVELING
L63
18
DG/RD
L63
18
DG/RD
LEFT
REAR
TURN
SIGNAL
LEFT
REAR
TURN
SIGNAL
REMOTE
KEYLESS
ENTRY
MODULE
(8W-39-10)
(8W-39-13)
1
2
L63
18
DG/RD
L62
18
DG/RD
FROM
MULTI-
FUNCTION
SWITCH
(8W-51-8)
K
L62
18
BR/RD
HEADLAMP
LEVELING
EXCEPT
HEADLAMP
LEVELING
L62
18
BR/RD
L62
18
BR/RD
11
C202
11
C203
L63
18
DG/RD
L62
18
BR/RD
1
LEFT
REAR
TURN
SIGNAL
GROUND
LEFT
REAR
TURN
SIGNAL
LAMP
(8W-52-3)
(8W-52-5)
2
1
RIGHT
REAR
TURN
SIGNAL
GROUND
RIGHT
REAR
TURN
SIGNAL
LAMP
(8W-52-3)
(8W-52-5)
2
Z1
18
BK
Z1
18
BK
G300
(8W-15-27)
G301
(8W-15-28)

8W-52 TURN SIGNALS

Component	Page
G103	8W-52-3, 6
G104	8W-52-3, 6
G200	8W-52-2, 4
G204	8W-52-2, 6
G300	8W-52-3, 5
G301	8W-52-3, 5
Instrument Cluster	8W-52-2, 3, 4
Left Front Park/Turn Signal Lamp	8W-52-3
Left Front Side Marker	8W-52-6
Left Front Turn Signal Lamp	8W-52-6
Left Rear Turn Signal Lamp	8W-52-3, 5
Left Turn Signal Indicator	8W-52-2, 4, 6
Multi-Function Switch	8W-52-2, 3, 4, 5
Remote Keyless Entry Module	8W-52-5
Right Front Park/Turn Signal Lamp	8W-52-3
Right Front Side Marker	8W-52-6
Right Front Turn Signal Lamp	8W-52-6
Right Rear Turn Signal Lamp	8W-52-3, 5
Right Turn Signal Indicator	8W-52-2, 4, 6
Turn Signal Lamp	8W-52-3

EXCEPT EXPORT

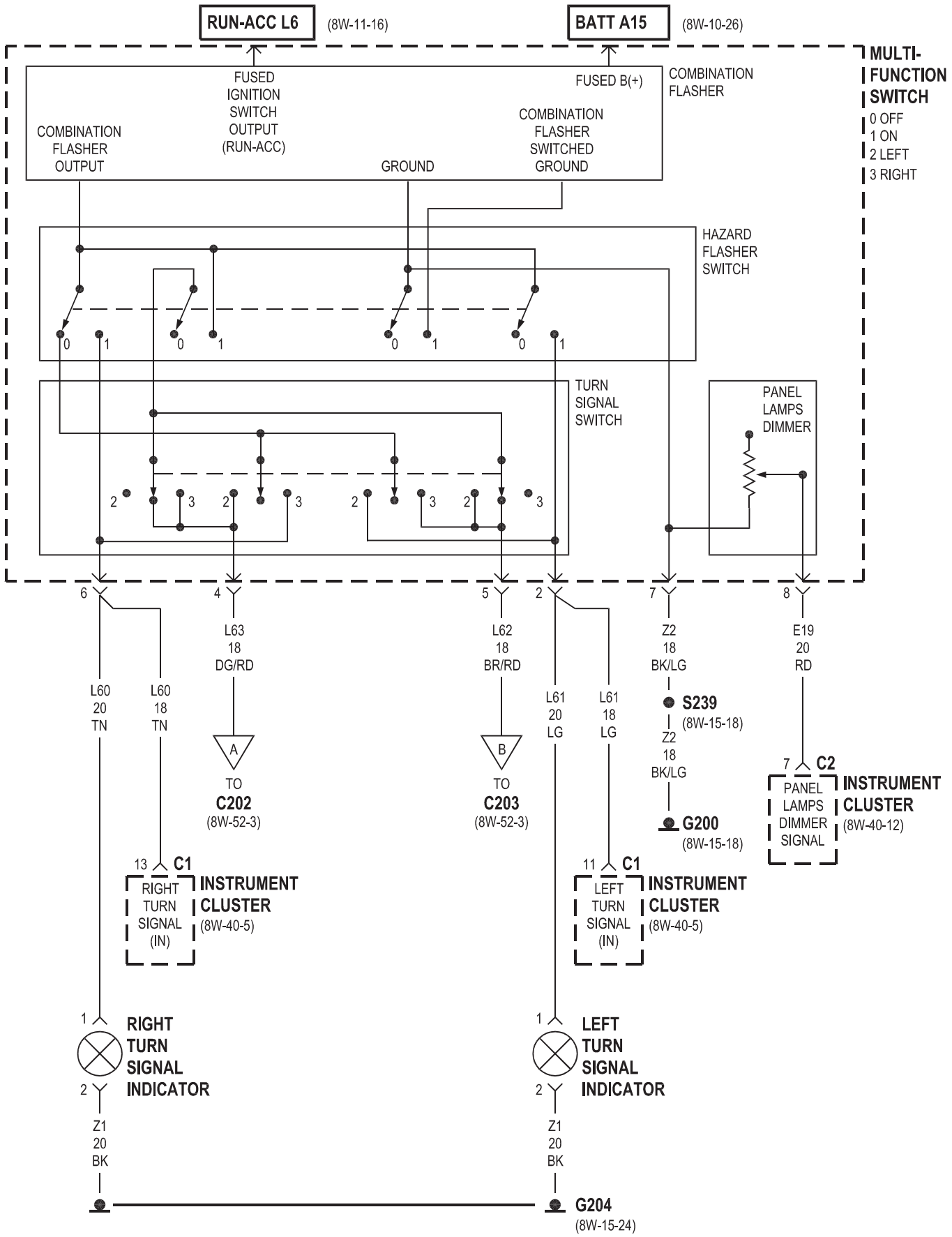

▼ CANADA ONLY

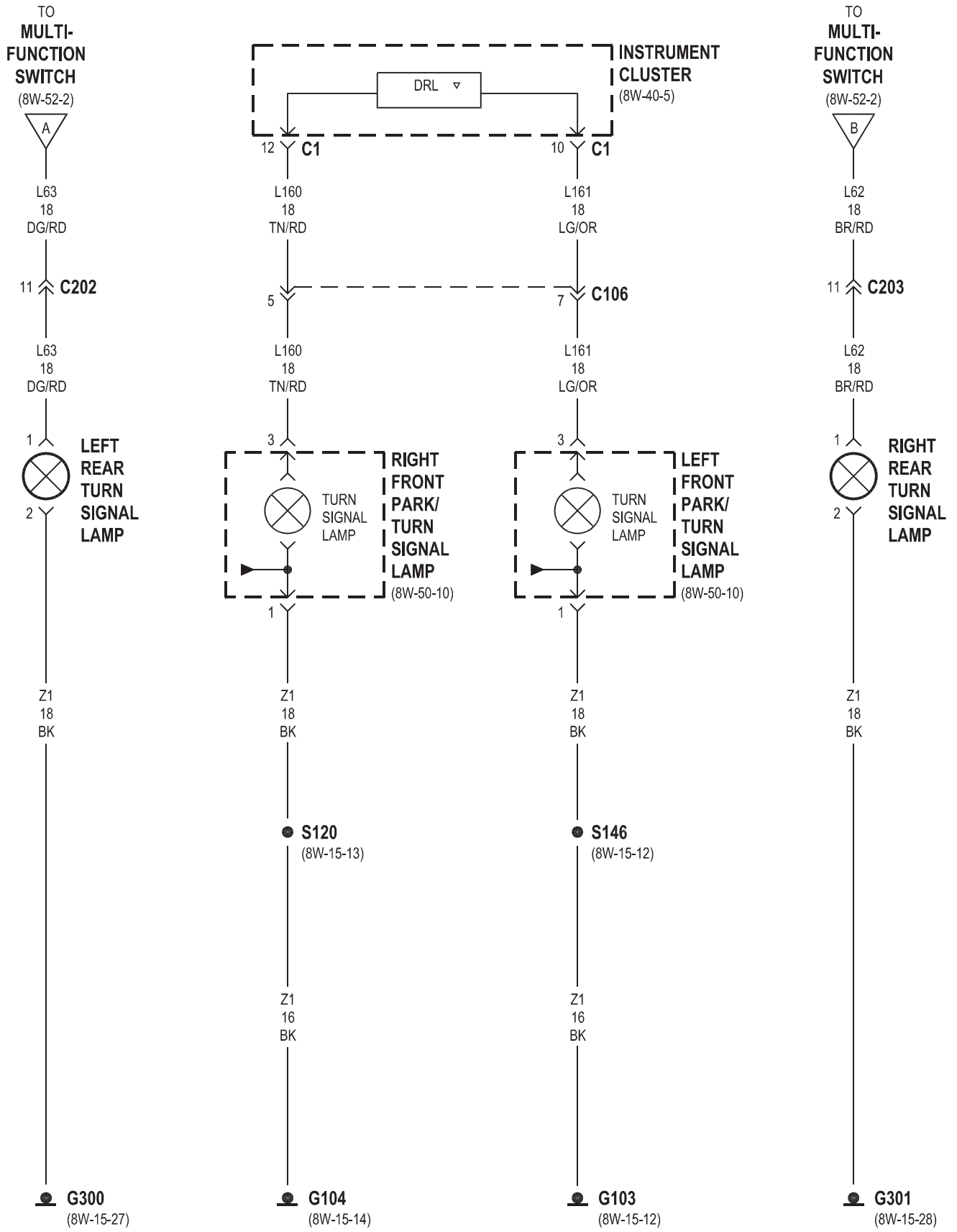
TO
MULTI-FUNCTION SWITCH
(8W-52-2)
A
L63
18
DG/RD
11
C202
L63
18
DG/RD
1
2
LEFT REAR TURN SIGNAL LAMP
Z1
18
BK
G300
(8W-15-27)
DRL ▿
INSTRUMENT CLUSTER
(8W-40-5)
12
C1
10
C1
L160
18
TN/RD
L161
18
LG/OR
5
7
C106
L160
18
TN/RD
L161
18
LG/OR
3
TURN SIGNAL LAMP
RIGHT FRONT PARK/ TURN SIGNAL LAMP
(8W-50-10)
1
Z1
18
BK
S120
(8W-15-13)
Z1
16
BK
G104
(8W-15-14)
3
TURN SIGNAL LAMP
LEFT FRONT PARK/ TURN SIGNAL LAMP
(8W-50-10)
1
Z1
18
BK
S146
(8W-15-12)
Z1
16
BK
G103
(8W-15-12)
TO
MULTI-FUNCTION SWITCH
(8W-52-2)
B
L62
18
BR/RD
11
C203
L62
18
BR/RD
1
2
RIGHT REAR TURN SIGNAL LAMP
Z1
18
BK
G301
(8W-15-28)

▿ CANADA ONLY

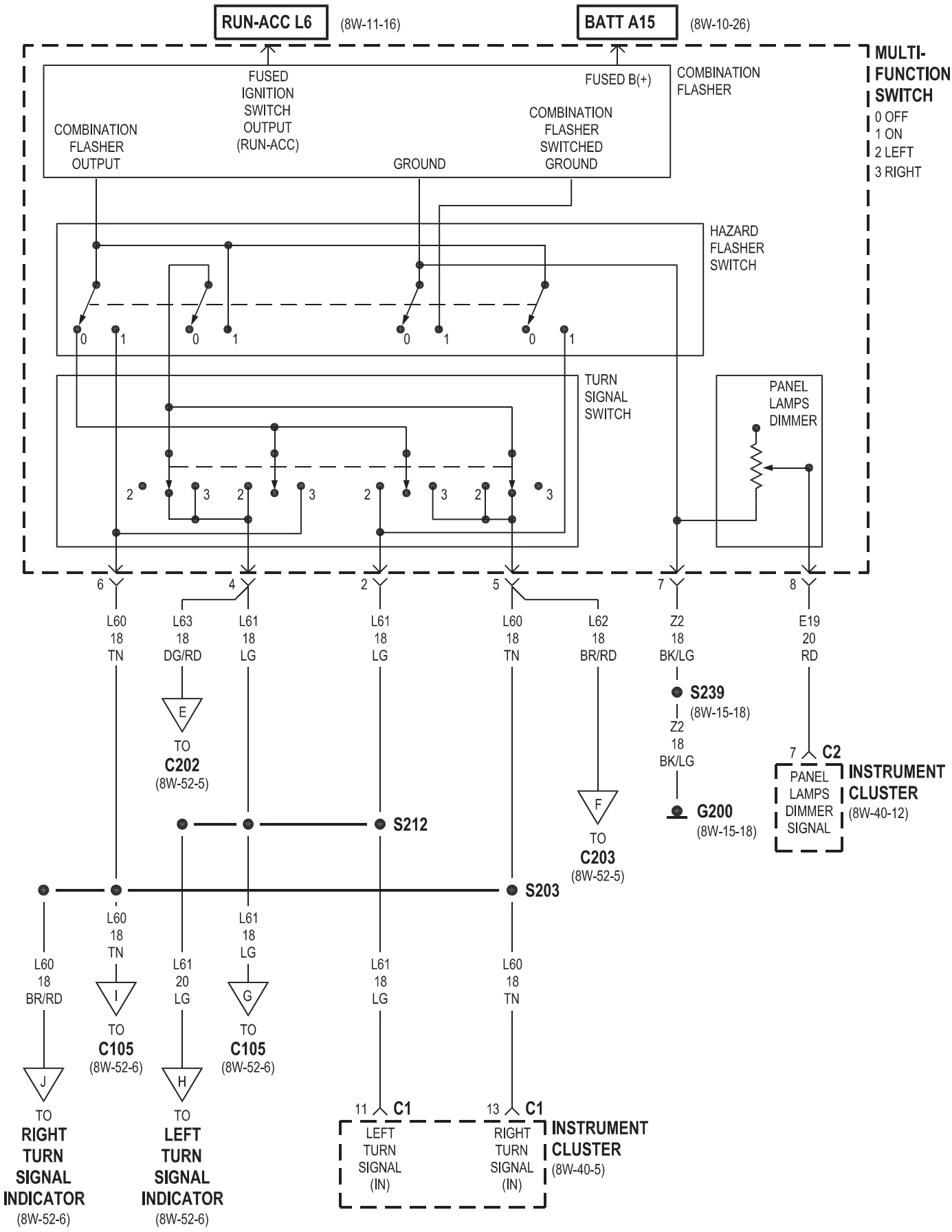

038W-12

PT305204

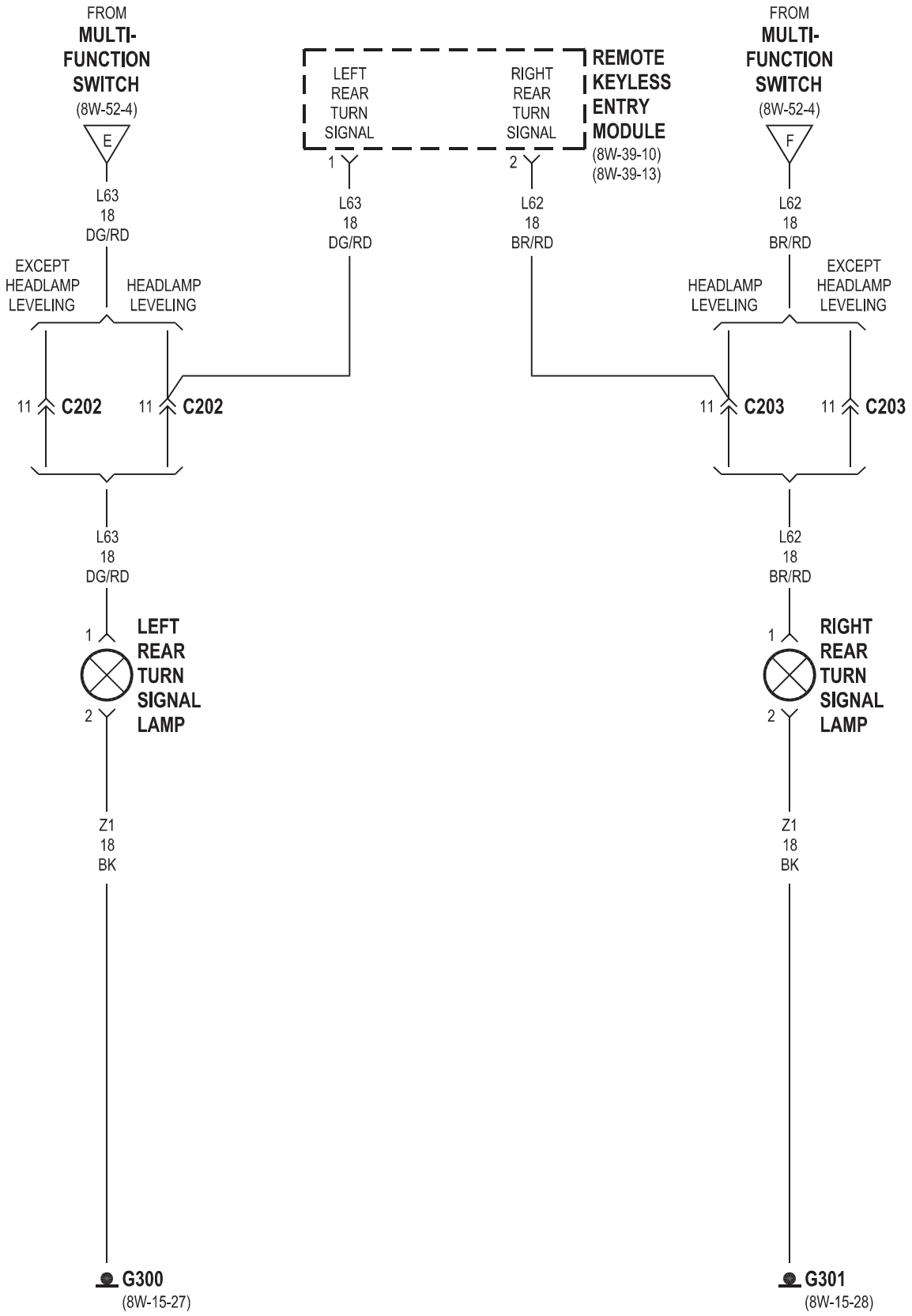
FROM
MULTI-
FUNCTION
SWITCH
(8W-52-4)
E
L63
18
DG/RD
EXCEPT
HEADLAMP
LEVELING
HEADLAMP
LEVELING
11
C202
11
C202
L63
18
DG/RD
1
2
LEFT
REAR
TURN
SIGNAL
LAMP
Z1
18
BK
G300
(8W-15-27)
LEFT
REAR
TURN
SIGNAL
RIGHT
REAR
TURN
SIGNAL
REMOTE
KEYLESS
ENTRY
MODULE
(8W-39-10)
(8W-39-13)
1
2
L63
18
DG/RD
L62
18
BR/RD
FROM
MULTI-
FUNCTION
SWITCH
(8W-52-4)
F
L62
18
BR/RD
HEADLAMP
LEVELING
EXCEPT
HEADLAMP
LEVELING
11
C203
11
C203
L62
18
BR/RD
1
2
RIGHT
REAR
TURN
SIGNAL
LAMP
Z1
18
BK
G301
(8W-15-28)

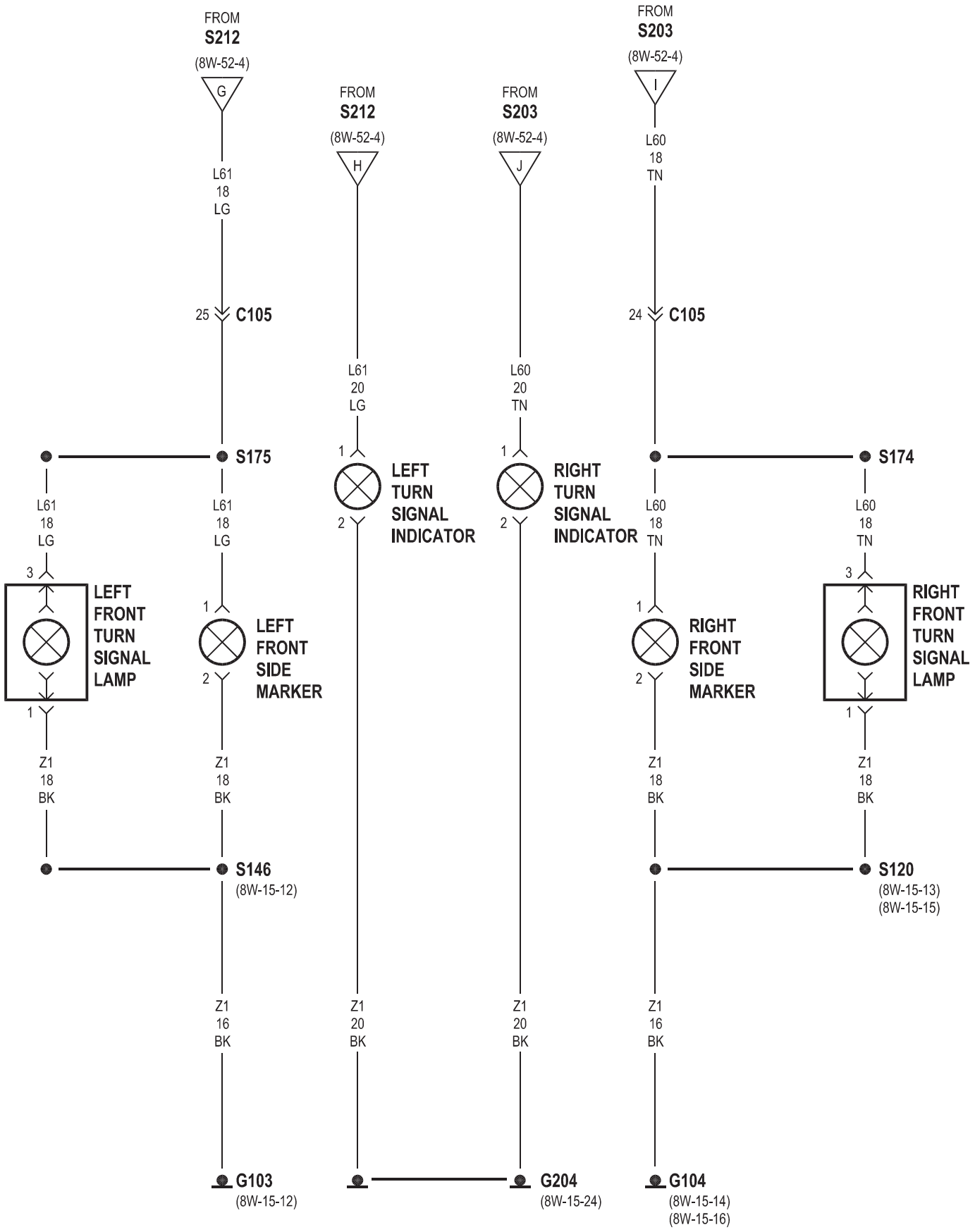
FROM
S212
(8W-52-4)
G
L61
18
LG
25
C105
FROM
S212
(8W-52-4)
H
L61
20
LG
FROM
S203
(8W-52-4)
J
L60
20
TN
FROM
S203
(8W-52-4)
I
L60
18
TN
24
C105
S175
S174
1
LEFT
TURN
SIGNAL
INDICATOR
2
1
RIGHT
TURN
SIGNAL
INDICATOR
2
L61
18
LG
3
LEFT
FRONT
TURN
SIGNAL
LAMP
1
L61
18
LG
1
LEFT
FRONT
SIDE
MARKER
2
L60
18
TN
1
RIGHT
FRONT
SIDE
MARKER
2
L60
18
TN
3
RIGHT
FRONT
TURN
SIGNAL
LAMP
1
Z1
18
BK
Z1
18
BK
Z1
18
BK
Z1
18
BK
S146
(8W-15-12)
S120
(8W-15-13)
(8W-15-15)
Z1
16
BK
Z1
20
BK
Z1
20
BK
Z1
16
BK
G103
(8W-15-12)
G204
(8W-15-24)
G104
(8W-15-14)
(8W-15-16)

8W-53 WIPERS

Component	Page
Front Washer Pump Motor	8W-53-2, 3
Front Wiper Motor	8W-53-2
Front Wiper/Washer Switch	8W-53-2
Fuse 15	8W-53-2
Fuse Block	8W-53-2
G103	8W-53-2
G104	8W-53-2
G201	8W-53-2, 3
G300	8W-53-3
Instrument Cluster	8W-53-3
Rear Wiper Motor	8W-53-3
Rear Wiper Switch	8W-53-2, 3

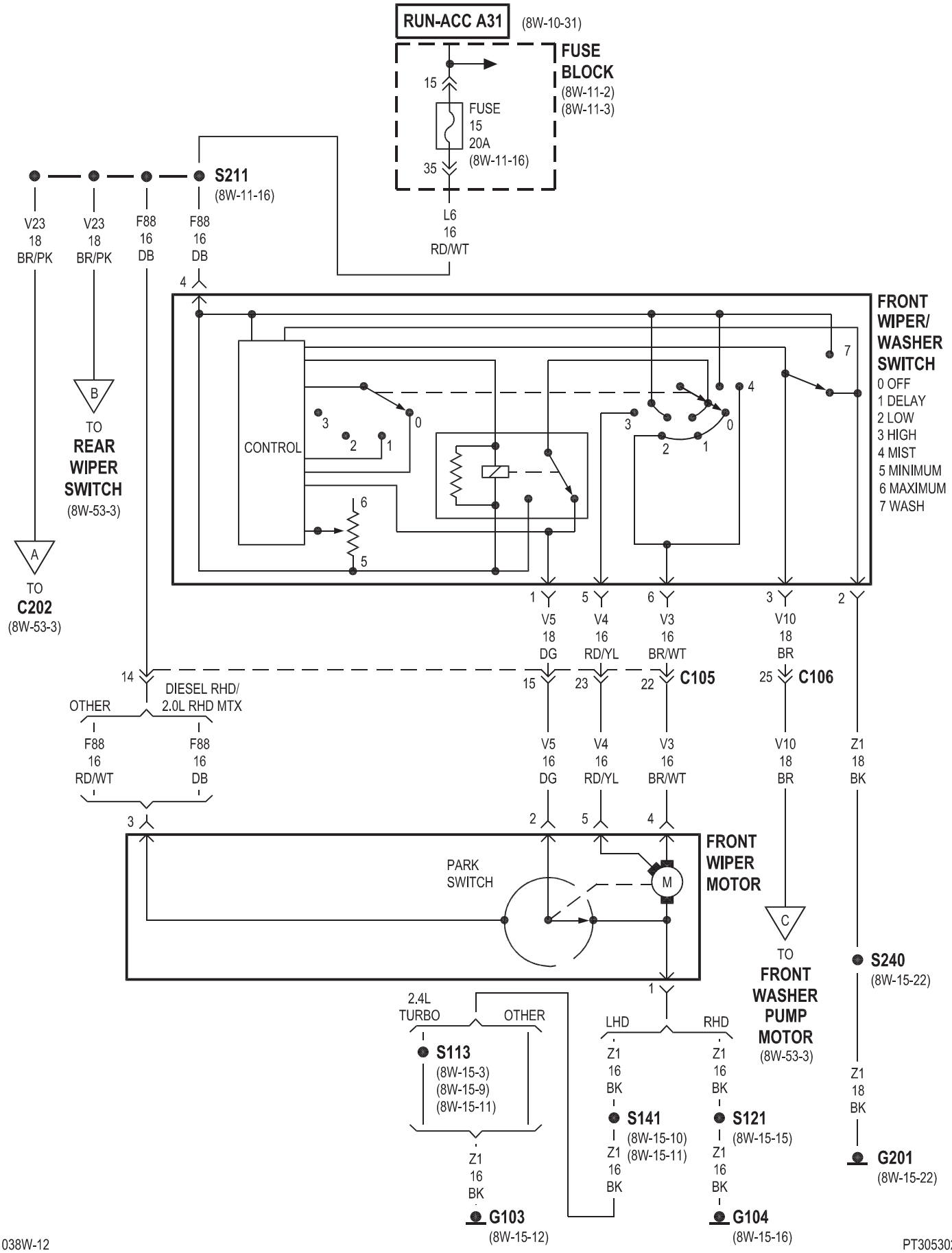
RUN-ACC A31
(8W-10-31)
FUSE BLOCK
(8W-11-2)
(8W-11-3)
15
FUSE 15 20A
(8W-11-16)
35
L6 16 RD/WT
S211
(8W-11-16)
V23 18 BR/PK
V23 18 BR/PK
F88 16 DB
F88 16 DB
4
FRONT WIPER/ WASHER SWITCH
0 OFF
1 DELAY
2 LOW
3 HIGH
4 MIST
5 MINIMUM
6 MAXIMUM
7 WASH
CONTROL
B
TO REAR WIPER SWITCH
(8W-53-3)
A
TO C202
(8W-53-3)
1 V5 18 DG
5 V4 16 RD/YL
6 V3 16 BR/WT
3 V10 18 BR
2
14
DIESEL RHD/ 2.0L RHD MTX
OTHER
15
23
22
C105
25
C106
F88 16 RD/WT
F88 16 DB
V5 16 DG
V4 16 RD/YL
V3 16 BR/WT
V10 18 BR
Z1 18 BK
3
2
5
4
PARK SWITCH
M
FRONT WIPER MOTOR
C
TO FRONT WASHER PUMP MOTOR
(8W-53-3)
S240
(8W-15-22)
1
2.4L TURBO
OTHER
S113
(8W-15-3)
(8W-15-9)
(8W-15-11)
Z1 16 BK
G103
(8W-15-12)
LHD
RHD
Z1 16 BK
S141
(8W-15-10)
(8W-15-11)
Z1 16 BK
Z1 16 BK
S121
(8W-15-15)
Z1 16 BK
G104
(8W-15-16)
Z1 18 BK
G201
(8W-15-22)

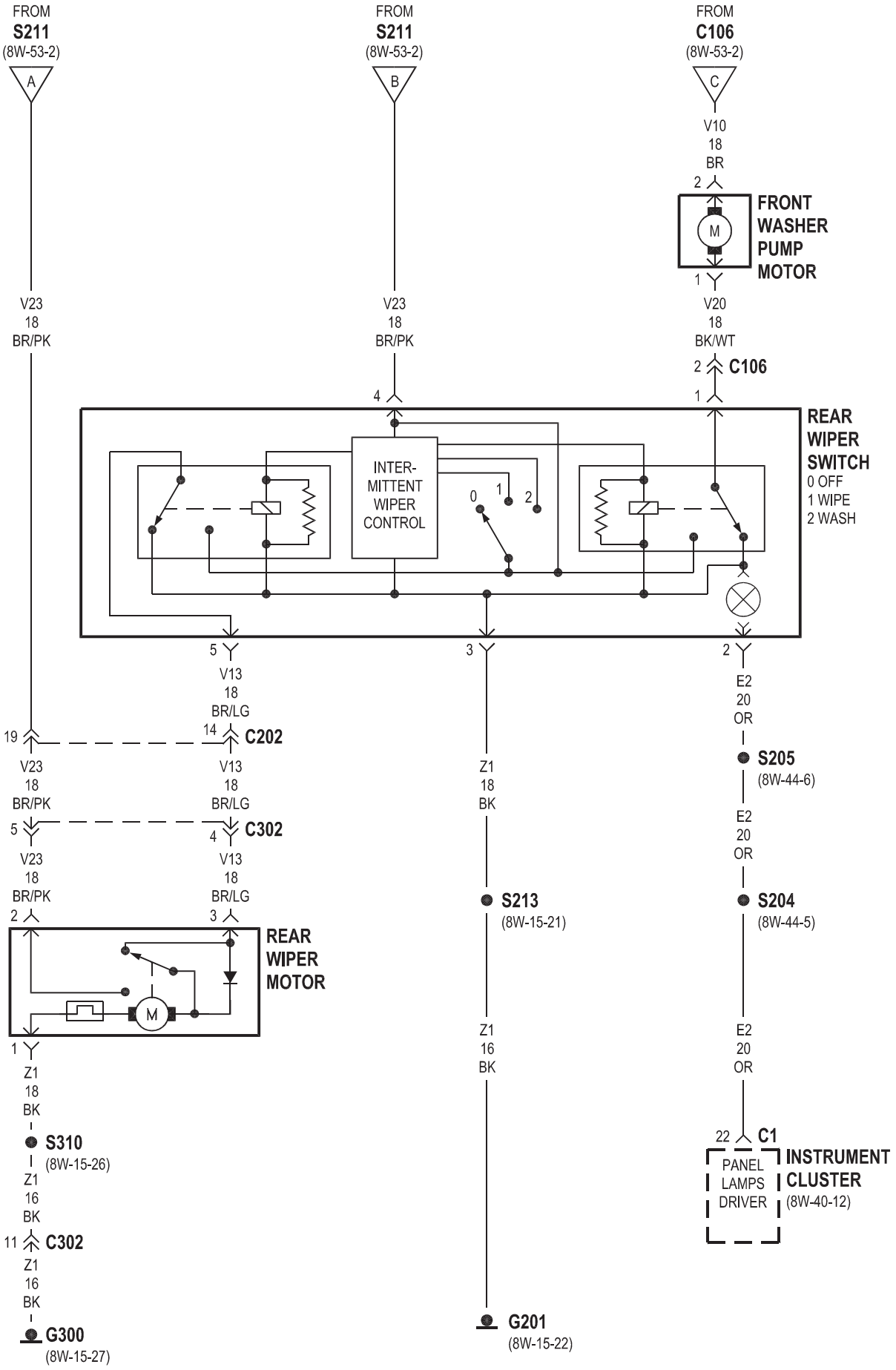
FROM
S211
(8W-53-2)
A
FROM
S211
(8W-53-2)
B
FROM
C106
(8W-53-2)
C
V10
18
BR
2
FRONT
WASHER
PUMP
MOTOR
M
1
V23
18
BR/PK
V23
18
BR/PK
V20
18
BK/WT
2
C106
1
4
REAR
WIPER
SWITCH
0 OFF
1 WIPE
2 WASH
INTER-
MITTENT
WIPER
CONTROL
0
1
2
5
3
2
V13
18
BR/LG
E2
20
OR
19
14
C202
V23
18
BR/PK
V13
18
BR/LG
Z1
18
BK
S205
(8W-44-6)
5
4
C302
V23
18
BR/PK
V13
18
BR/LG
E2
20
OR
2
3
S213
(8W-15-21)
S204
(8W-44-5)
REAR
WIPER
MOTOR
M
1
Z1
16
BK
E2
20
OR
Z1
18
BK
S310
(8W-15-26)
22
C1
PANEL
LAMPS
DRIVER
INSTRUMENT
CLUSTER
(8W-40-12)
Z1
16
BK
11
C302
Z1
16
BK
G300
(8W-15-27)
G201
(8W-15-22)

8W-60 POWER WINDOWS

Component	Page
Circuit Breaker No. 2 (FB)	8W-60-2, 4
Front Power Window Switch	8W-60-2, 3, 4, 5, 6
Fuse Block	8W-60-2, 4
G203	8W-60-2
G300	8W-60-5
G301	8W-60-6
Instrument Cluster	8W-60-2, 4
Left Front Power Window Motor	8W-60-3
Left Rear Power Window Motor	8W-60-5
Left Rear Power Window Switch	8W-60-4, 5
Right Front Power Window Motor	8W-60-3
Right Rear Power Window Motor	8W-60-6
Right Rear Power Window Switch	8W-60-4, 5, 6

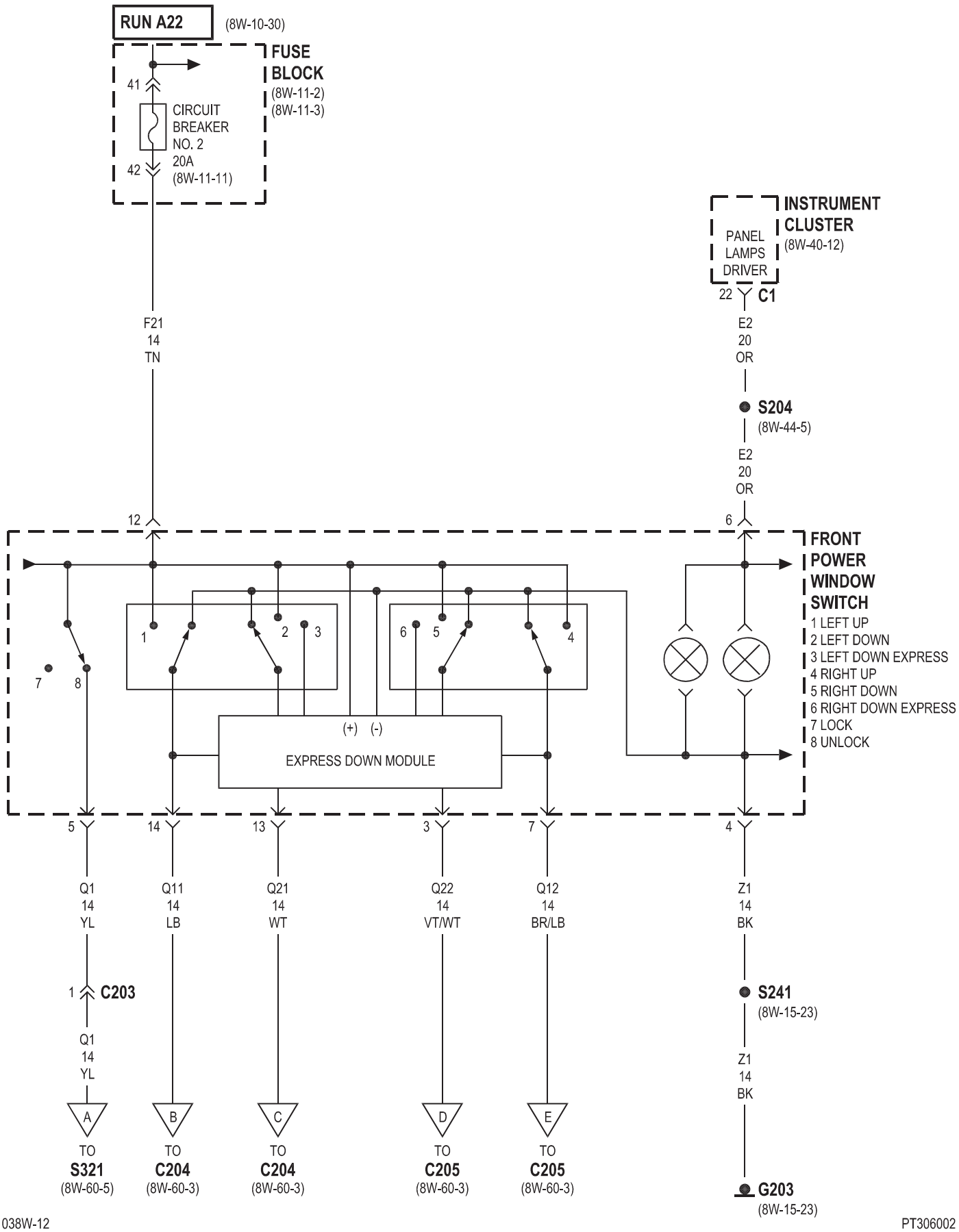
RUN A22
(8W-10-30)
FUSE BLOCK
(8W-11-2)
(8W-11-3)
41
CIRCUIT BREAKER NO. 2 20A
(8W-11-11)
42
INSTRUMENT CLUSTER
(8W-40-12)
PANEL LAMPS DRIVER
22
C1
F21
14
TN
E2
20
OR
S204
(8W-44-5)
E2
20
OR
12
6
FRONT POWER WINDOW SWITCH
1 LEFT UP
2 LEFT DOWN
3 LEFT DOWN EXPRESS
4 RIGHT UP
5 RIGHT DOWN
6 RIGHT DOWN EXPRESS
7 LOCK
8 UNLOCK
(+) (-)
EXPRESS DOWN MODULE
5
14
13
3
7
4
Q1
14
YL
Q11
14
LB
Q21
14
WT
Q22
14
VT/WT
Q12
14
BR/LB
Z1
14
BK
1
C203
Q1
14
YL
S241
(8W-15-23)
Z1
14
BK
A
B
C
D
E
TO
S321
(8W-60-5)
TO
C204
(8W-60-3)
TO
C204
(8W-60-3)
TO
C205
(8W-60-3)
TO
C205
(8W-60-3)
G203
(8W-15-23)

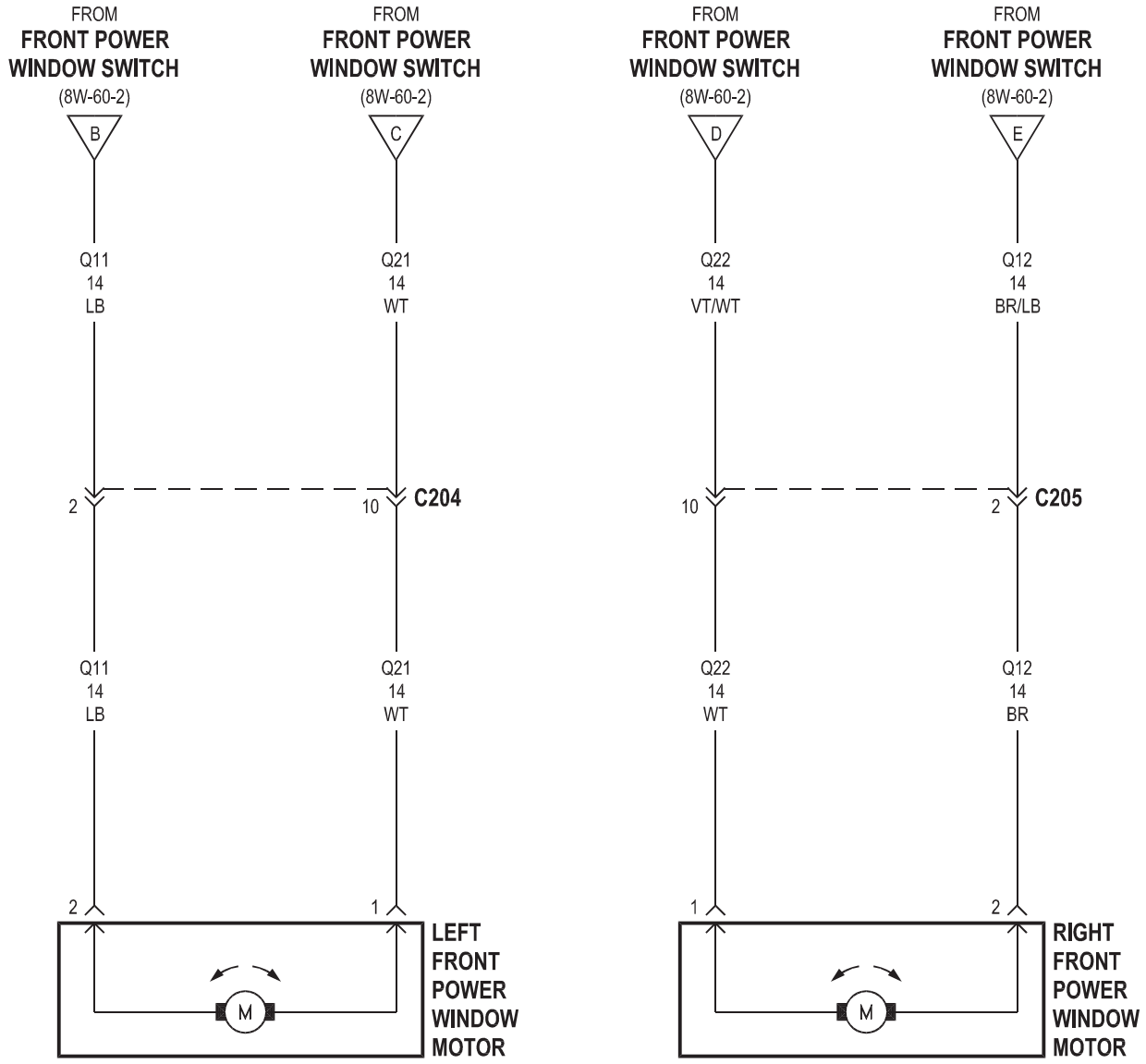
FROM
FRONT POWER WINDOW SWITCH
(8W-60-2)
B
FROM
FRONT POWER WINDOW SWITCH
(8W-60-2)
C
FROM
FRONT POWER WINDOW SWITCH
(8W-60-2)
D
FROM
FRONT POWER WINDOW SWITCH
(8W-60-2)
E
Q11 14 LB
Q21 14 WT
Q22 14 VT/WT
Q12 14 BR/LB
2
10
C204
10
2
C205
Q11 14 LB
Q21 14 WT
Q22 14 WT
Q12 14 BR
2
1
1
2
M
LEFT FRONT POWER WINDOW MOTOR
M
RIGHT FRONT POWER WINDOW MOTOR

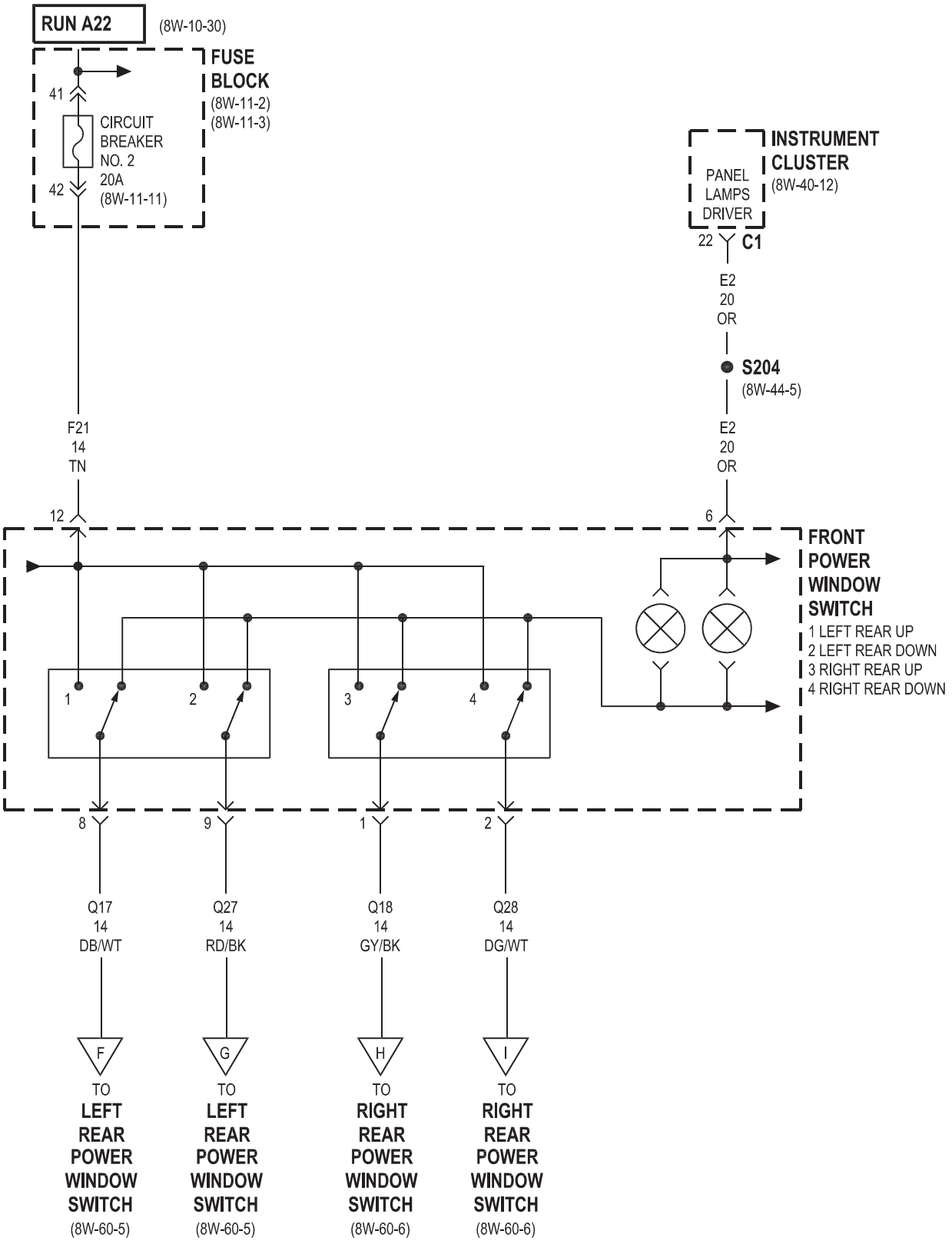
RUN A22
(8W-10-30)
FUSE BLOCK
(8W-11-2)
(8W-11-3)
41
CIRCUIT BREAKER NO. 2 20A
(8W-11-11)
42
INSTRUMENT CLUSTER
(8W-40-12)
PANEL LAMPS DRIVER
22
C1
E2
20
OR
S204
(8W-44-5)
E2
20
OR
F21
14
TN
12
6
FRONT POWER WINDOW SWITCH
1 LEFT REAR UP
2 LEFT REAR DOWN
3 RIGHT REAR UP
4 RIGHT REAR DOWN
1
2
3
4
8
9
1
2
Q17
14
DB/WT
Q27
14
RD/BK
Q18
14
GY/BK
Q28
14
DG/WT
F
G
H
I
TO
LEFT REAR POWER WINDOW SWITCH
(8W-60-5)
TO
LEFT REAR POWER WINDOW SWITCH
(8W-60-5)
TO
RIGHT REAR POWER WINDOW SWITCH
(8W-60-6)
TO
RIGHT REAR POWER WINDOW SWITCH
(8W-60-6)

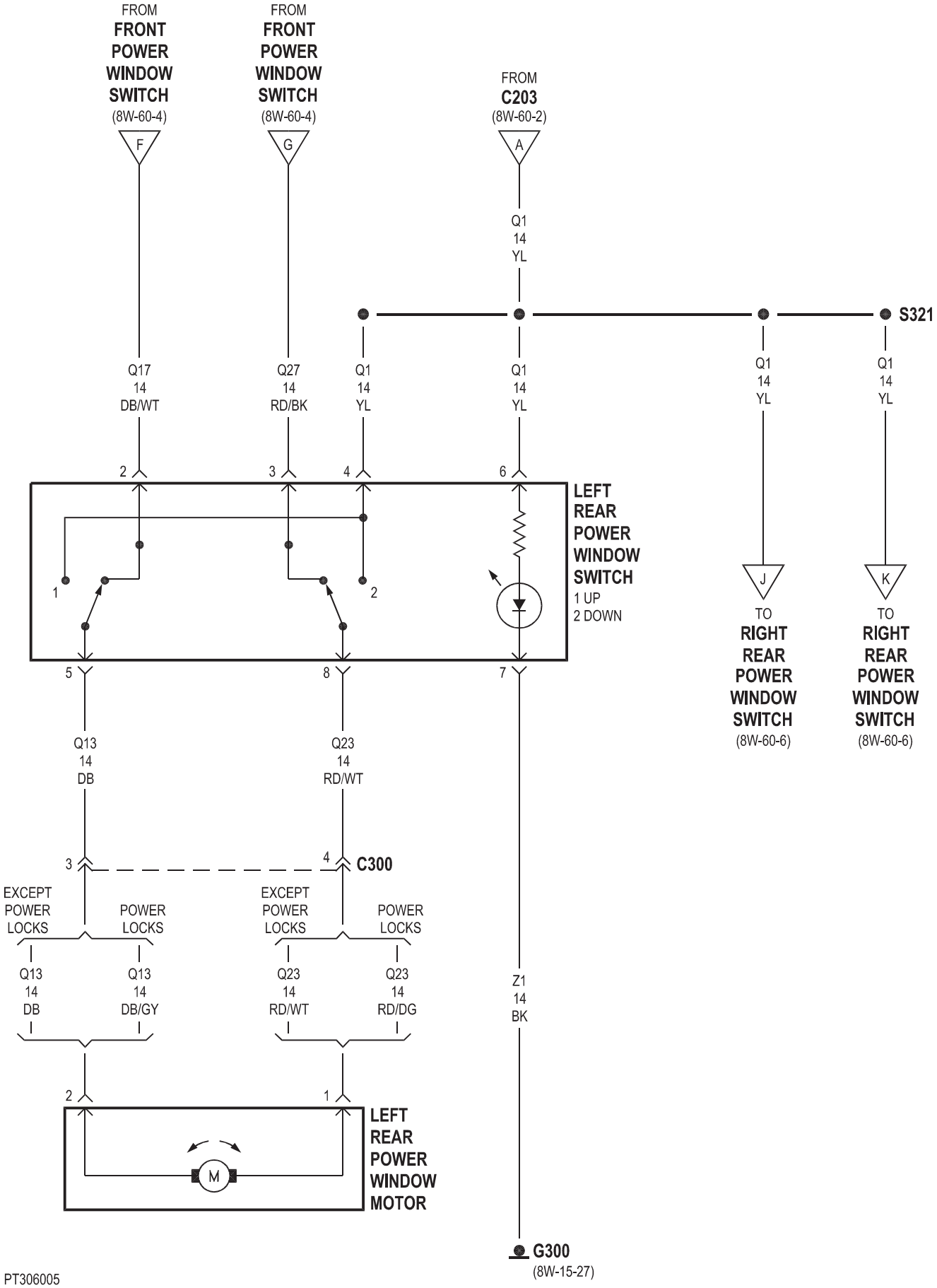
FROM
FRONT
POWER
WINDOW
SWITCH
(8W-60-4)
F
FROM
FRONT
POWER
WINDOW
SWITCH
(8W-60-4)
G
FROM
C203
(8W-60-2)
A
Q1
14
YL
S321
Q17
14
DB/WT
Q27
14
RD/BK
Q1
14
YL
Q1
14
YL
Q1
14
YL
Q1
14
YL
2
3
4
6
LEFT
REAR
POWER
WINDOW
SWITCH
1 UP
2 DOWN
1
2
J
K
TO
RIGHT
REAR
POWER
WINDOW
SWITCH
(8W-60-6)
TO
RIGHT
REAR
POWER
WINDOW
SWITCH
(8W-60-6)
5
8
7
Q13
14
DB
Q23
14
RD/WT
3
4
C300
EXCEPT
POWER
LOCKS
POWER
LOCKS
EXCEPT
POWER
LOCKS
POWER
LOCKS
Q13
14
DB
Q13
14
DB/GY
Q23
14
RD/WT
Q23
14
RD/DG
Z1
14
BK
2
1
M
LEFT
REAR
POWER
WINDOW
MOTOR
G300
(8W-15-27)

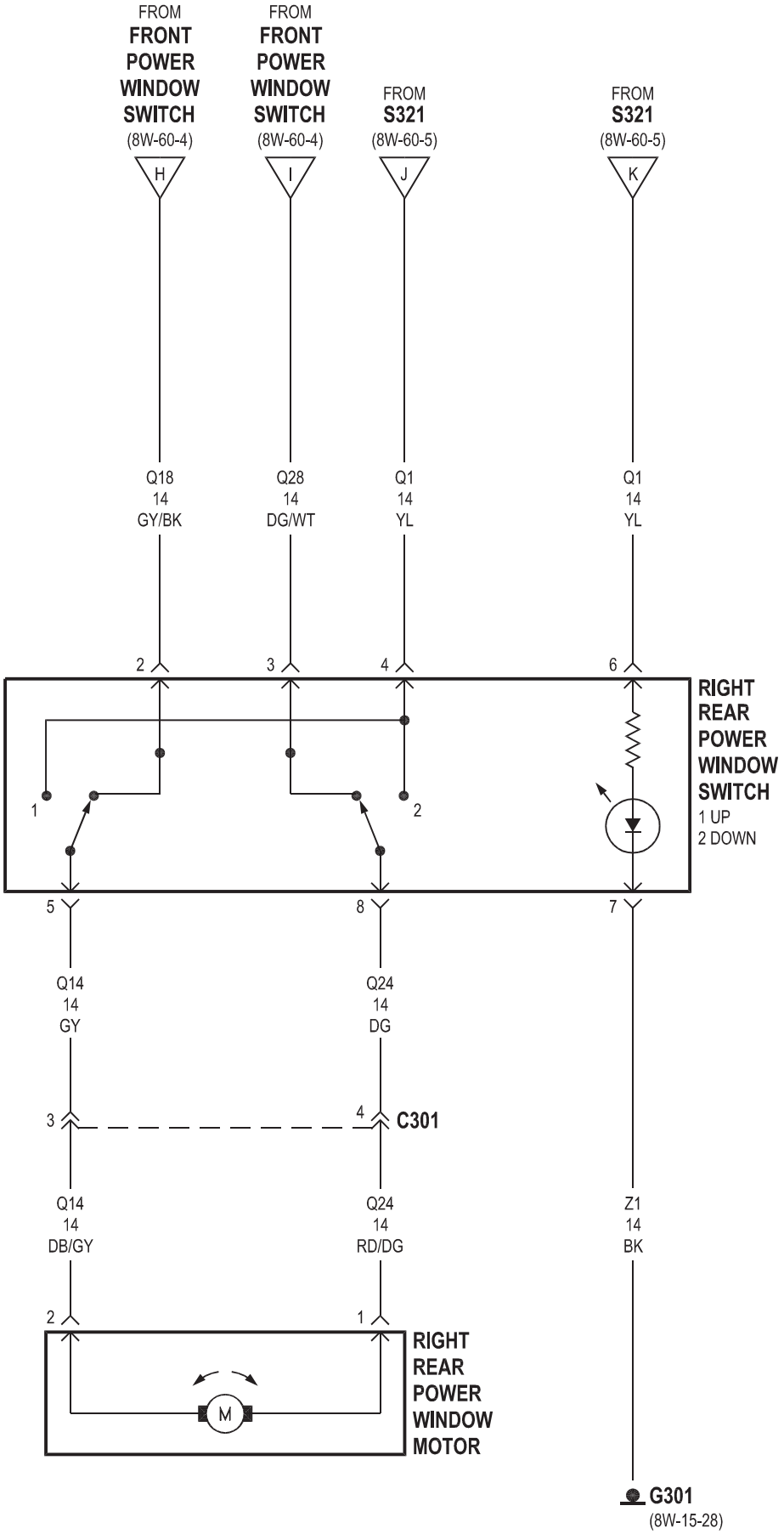
FROM
FRONT
POWER
WINDOW
SWITCH
(8W-60-4)
H
FROM
FRONT
POWER
WINDOW
SWITCH
(8W-60-4)
I
FROM
S321
(8W-60-5)
J
FROM
S321
(8W-60-5)
K
Q18
14
GY/BK
Q28
14
DG/WT
Q1
14
YL
Q1
14
YL
2
3
4
6
RIGHT
REAR
POWER
WINDOW
SWITCH
1 UP
2 DOWN
1
2
5
8
7
Q14
14
GY
Q24
14
DG
3
4
C301
Q14
14
DB/GY
Q24
14
RD/DG
Z1
14
BK
2
1
M
RIGHT
REAR
POWER
WINDOW
MOTOR
G301
(8W-15-28)

8W-61 POWER DOOR LOCKS

Component	Page
Data Link Connector	8W-61-7
Driver Door Ajar Switch	8W-61-8
Driver Door Power Lock Motor/Ajar Switch	8W-61-7, 8, 9
G201	8W-61-2, 5, 8, 9
G203	8W-61-3, 4, 8, 9
G300	8W-61-3, 5, 7
Headlamp Switch	8W-61-2, 3, 4, 5
Instrument Cluster	8W-61-7
Left Cylinder Lock Switch	8W-61-2, 4
Left Door Lock Switch	8W-61-2, 4
Left Rear Door Power Lock Motor	8W-61-6
Liftgate Ajar Switch	8W-61-7
Liftgate Cylinder Lock Switch	8W-61-3, 5
Liftgate Power Lock Motor	8W-61-6
Passenger Door Ajar Switch	8W-61-8
Passenger Door Power Lock Motor/Ajar Switch	8W-61-6, 8, 9
Remote Keyless Entry Module	8W-61-2, 3, 4, 5, 6, 7, 8, 9
Right Cylinder Lock Switch	8W-61-3, 5
Right Door Lock Switch	8W-61-3, 5
Right Rear Door Power Lock Motor	8W-61-6

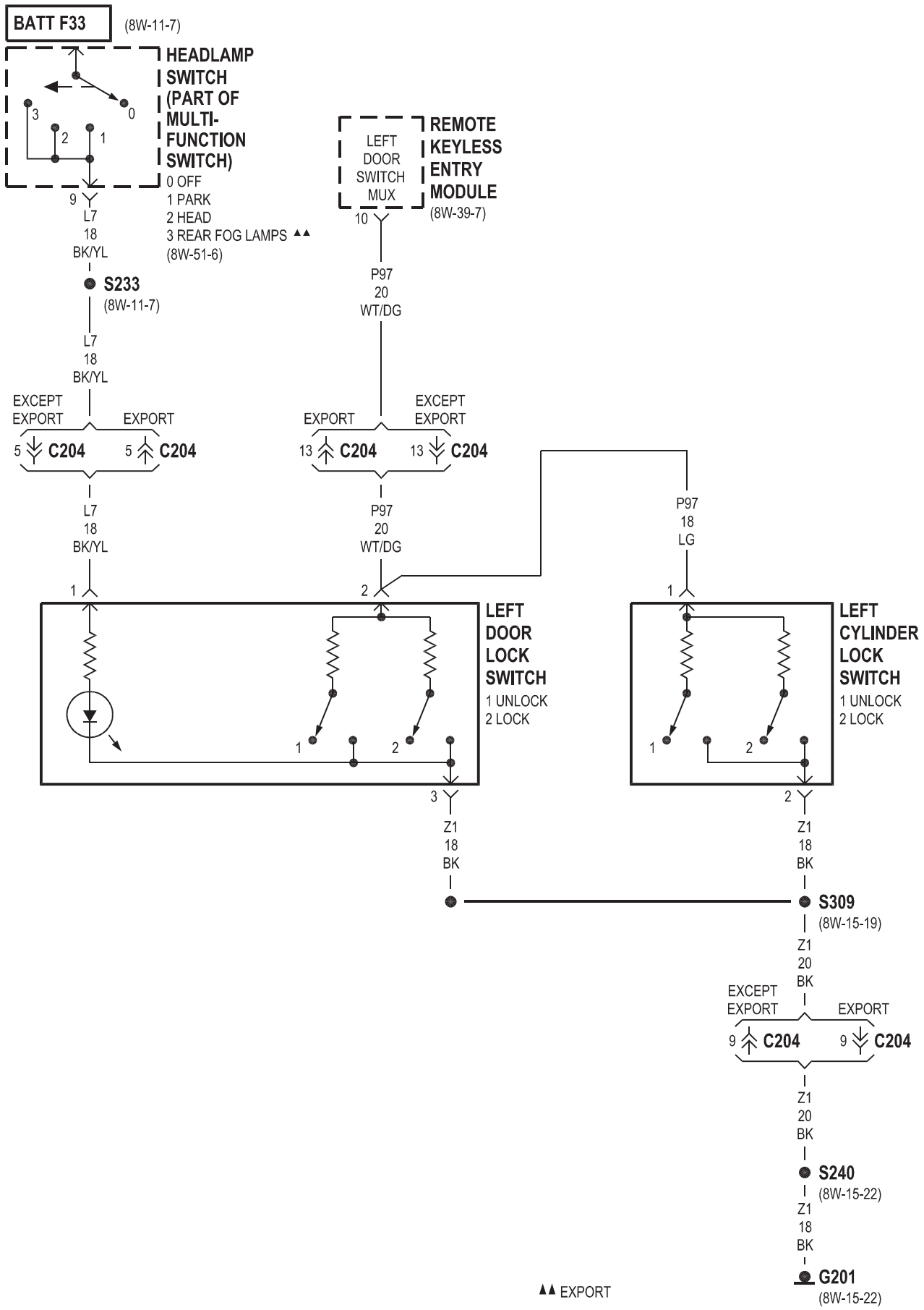
BATT F33
(8W-11-7)
HEADLAMP SWITCH (PART OF MULTI-FUNCTION SWITCH)
0 OFF
1 PARK
2 HEAD
3 REAR FOG LAMPS ▲▲
(8W-51-6)
3
2
1
0
9
L7
18
BK/YL
S233
(8W-11-7)
L7
18
BK/YL
LEFT DOOR SWITCH MUX
REMOTE KEYLESS ENTRY MODULE
(8W-39-7)
10
P97
20
WT/DG
EXCEPT EXPORT
EXPORT
5 C204
5 C204
EXPORT
EXCEPT EXPORT
13 C204
13 C204
L7
18
BK/YL
P97
20
WT/DG
P97
18
LG
1
2
1
LEFT DOOR LOCK SWITCH
1 UNLOCK
2 LOCK
1
2
3
LEFT CYLINDER LOCK SWITCH
1 UNLOCK
2 LOCK
1
2
2
Z1
18
BK
Z1
18
BK
S309
(8W-15-19)
Z1
20
BK
EXCEPT EXPORT
EXPORT
9 C204
9 C204
Z1
20
BK
S240
(8W-15-22)
Z1
18
BK
G201
(8W-15-22)
▲▲ EXPORT

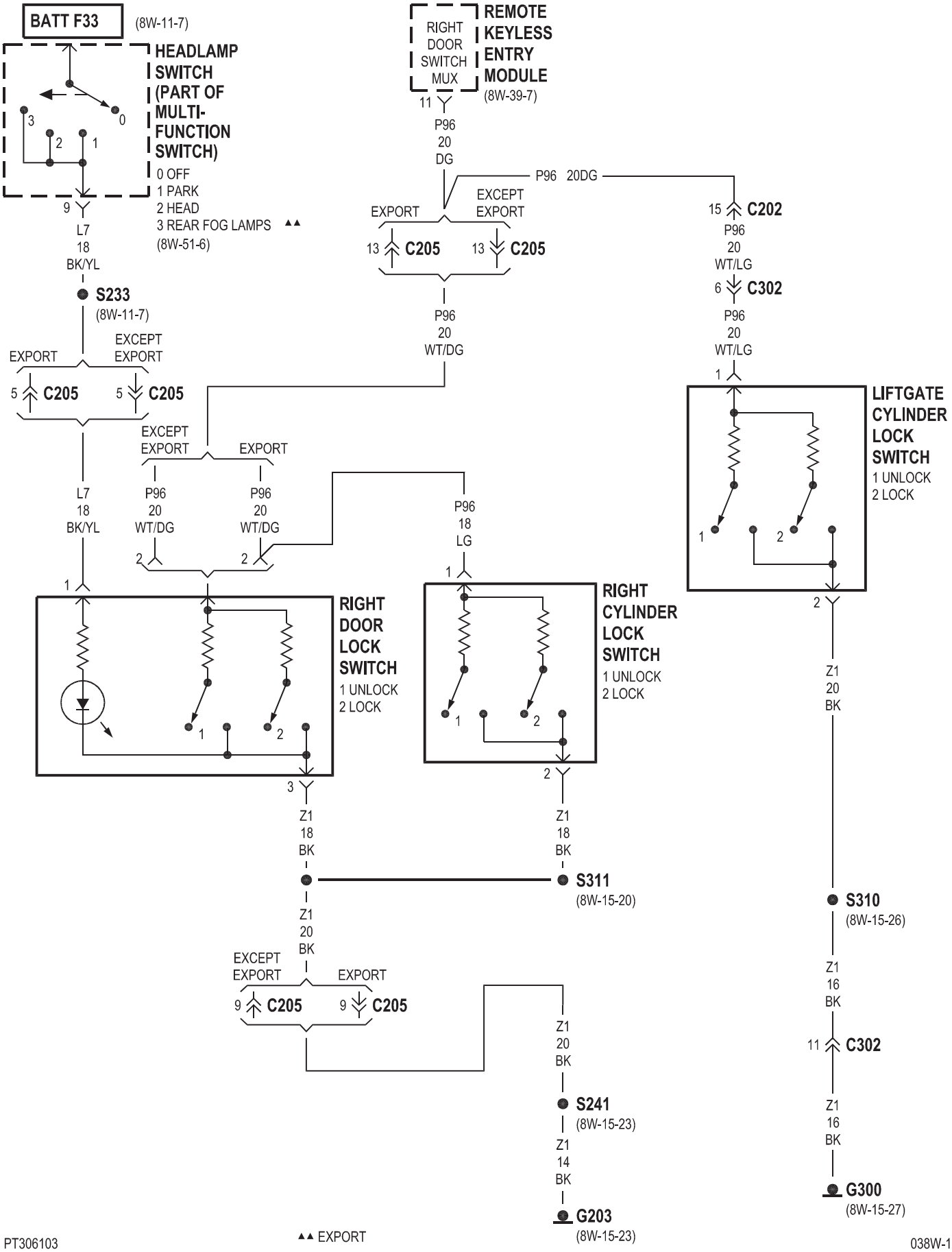
BATT F33
(8W-11-7)
HEADLAMP SWITCH (PART OF MULTI-FUNCTION SWITCH)
0 OFF
1 PARK
2 HEAD
3 REAR FOG LAMPS ▲▲
(8W-51-6)
9
L7
18
BK/YL
S233
(8W-11-7)
EXPORT
EXCEPT EXPORT
5 C205
5 C205
RIGHT DOOR SWITCH MUX
REMOTE KEYLESS ENTRY MODULE
(8W-39-7)
11
P96
20
DG
P96 20DG
EXPORT
EXCEPT EXPORT
13 C205
13 C205
P96
20
WT/DG
15 C202
P96
20
WT/LG
6 C302
P96
20
WT/LG
1
LIFTGATE CYLINDER LOCK SWITCH
1 UNLOCK
2 LOCK
2
Z1
20
BK
EXCEPT EXPORT
EXPORT
P96
20
WT/DG
P96
20
WT/DG
L7
18
BK/YL
P96
18
LG
RIGHT DOOR LOCK SWITCH
1 UNLOCK
2 LOCK
RIGHT CYLINDER LOCK SWITCH
1 UNLOCK
2 LOCK
3
Z1
18
BK
Z1
18
BK
S311
(8W-15-20)
Z1
20
BK
EXCEPT EXPORT
EXPORT
9 C205
9 C205
Z1
20
BK
S241
(8W-15-23)
Z1
14
BK
G203
(8W-15-23)
S310
(8W-15-26)
Z1
16
BK
11 C302
Z1
16
BK
G300
(8W-15-27)

▲▲ EXPORT

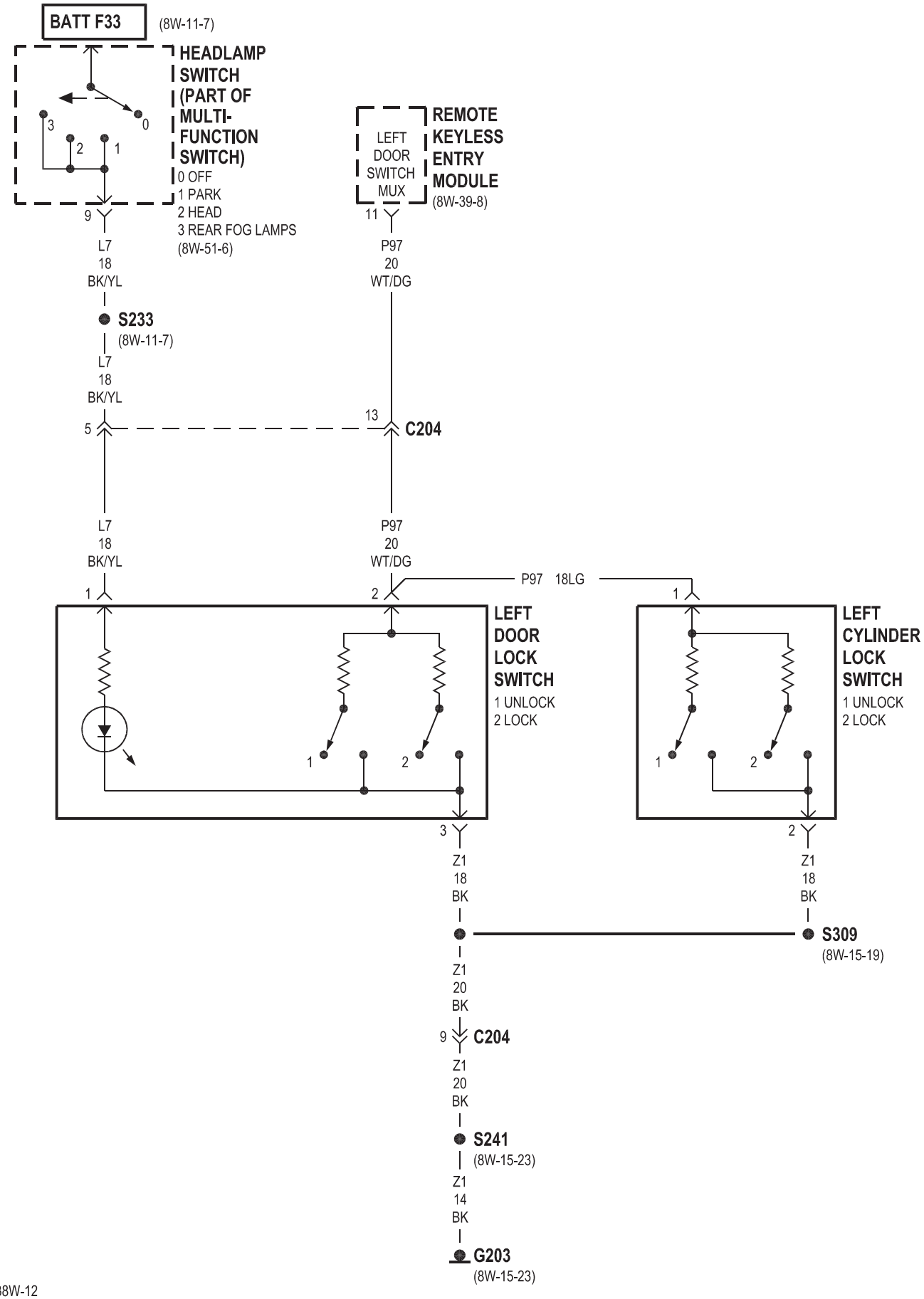
BATT F33
(8W-11-7)
HEADLAMP SWITCH (PART OF MULTI-FUNCTION SWITCH)
0 OFF
1 PARK
2 HEAD
3 REAR FOG LAMPS
(8W-51-6)
3
2
1
0
9
L7
18
BK/YL
S233
(8W-11-7)
L7
18
BK/YL
5
LEFT DOOR SWITCH MUX
REMOTE KEYLESS ENTRY MODULE
(8W-39-8)
11
P97
20
WT/DG
13
C204
L7
18
BK/YL
1
P97
20
WT/DG
2
P97 18LG
1
LEFT DOOR LOCK SWITCH
1 UNLOCK
2 LOCK
1
2
3
Z1
18
BK
LEFT CYLINDER LOCK SWITCH
1 UNLOCK
2 LOCK
1
2
2
Z1
18
BK
S309
(8W-15-19)
Z1
20
BK
9
C204
Z1
20
BK
S241
(8W-15-23)
Z1
14
BK
G203
(8W-15-23)

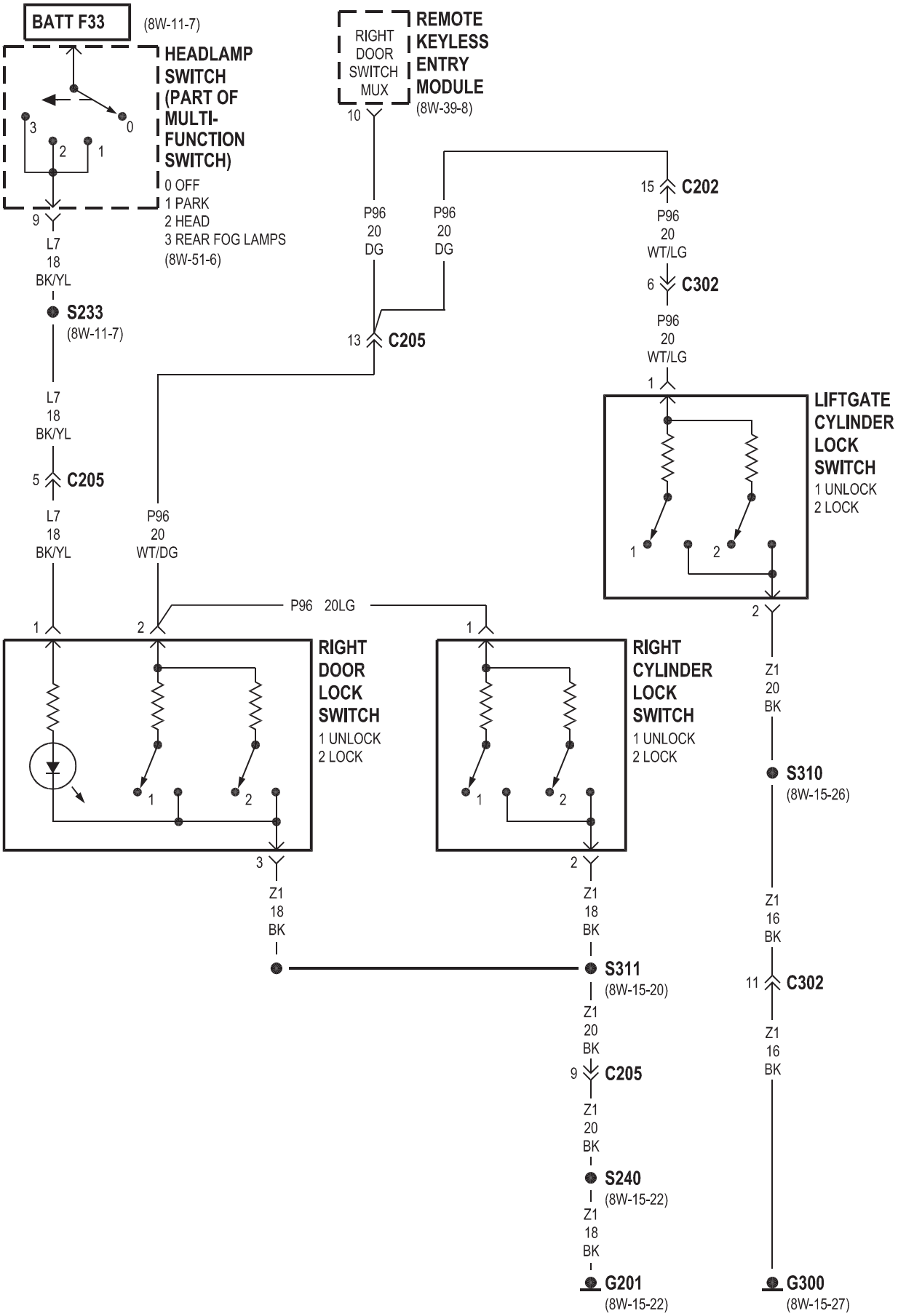
BATT F33
(8W-11-7)
HEADLAMP SWITCH (PART OF MULTI-FUNCTION SWITCH)
0 OFF
1 PARK
2 HEAD
3 REAR FOG LAMPS
(8W-51-6)
RIGHT DOOR SWITCH MUX
REMOTE KEYLESS ENTRY MODULE
(8W-39-8)
L7 18 BK/YL
S233
(8W-11-7)
P96 20 DG
C205
C202
P96 20 WT/LG
C302
P96 20 WT/DG
P96 20LG
LIFTGATE CYLINDER LOCK SWITCH
1 UNLOCK
2 LOCK
RIGHT DOOR LOCK SWITCH
1 UNLOCK
2 LOCK
RIGHT CYLINDER LOCK SWITCH
1 UNLOCK
2 LOCK
Z1 18 BK
S311
(8W-15-20)
Z1 20 BK
S240
(8W-15-22)
G201
(8W-15-22)
Z1 20 BK
S310
(8W-15-26)
Z1 16 BK
G300
(8W-15-27)

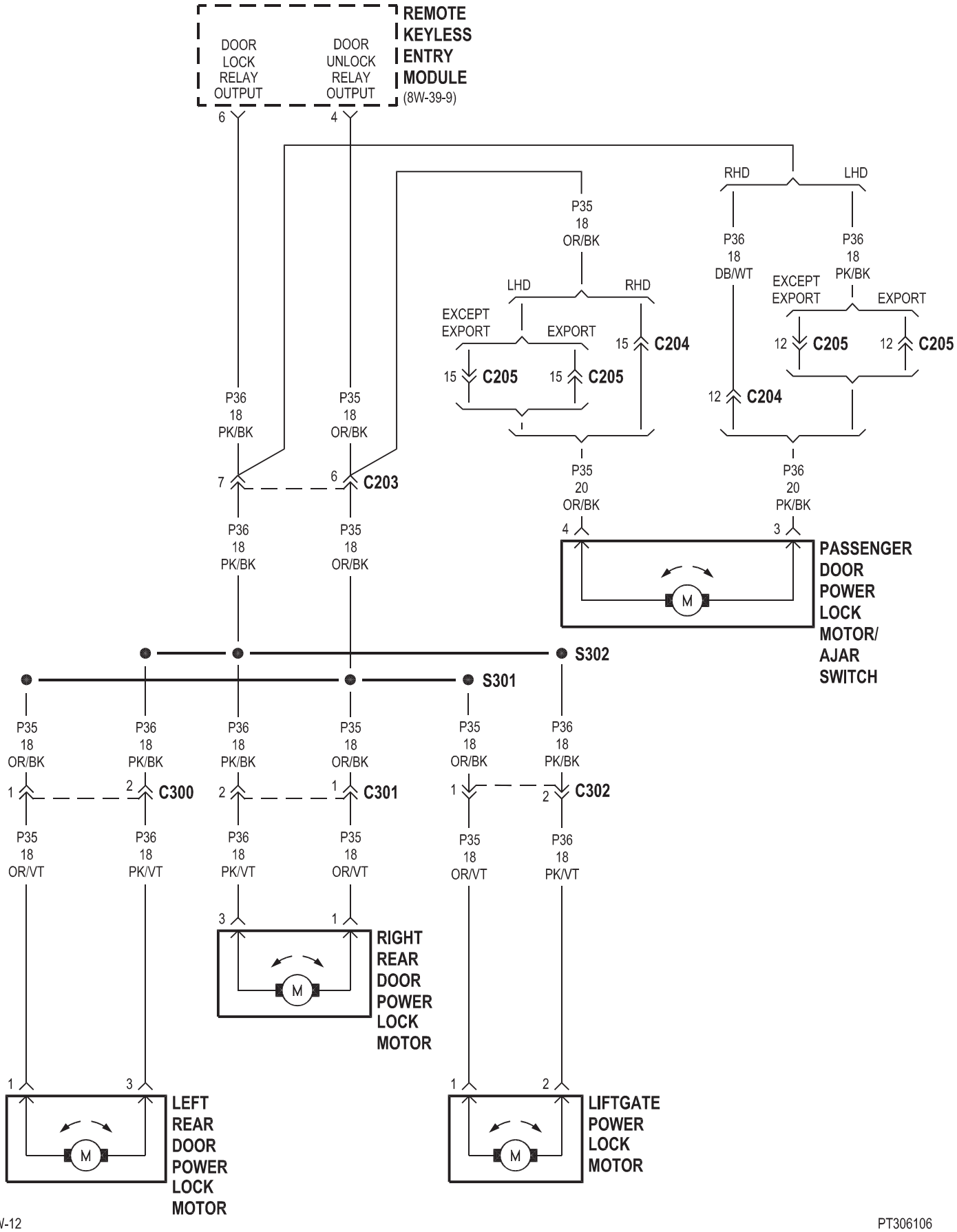
REMOTE KEYLESS ENTRY MODULE
(8W-39-9)
DOOR LOCK RELAY OUTPUT
DOOR UNLOCK RELAY OUTPUT
6
4
P36 18 PK/BK
P35 18 OR/BK
7
6
C203
P36 18 PK/BK
P35 18 OR/BK
P35 18 OR/BK
LHD
RHD
EXCEPT EXPORT
EXPORT
15
C205
15
C205
15
C204
P35 20 OR/BK
RHD
LHD
P36 18 DB/WT
P36 18 PK/BK
EXCEPT EXPORT
EXPORT
12
C205
12
C205
12
C204
P36 20 PK/BK
4
3
PASSENGER DOOR POWER LOCK MOTOR/ AJAR SWITCH
M
S302
S301
P35 18 OR/BK
P36 18 PK/BK
P36 18 PK/BK
P35 18 OR/BK
P35 18 OR/BK
P36 18 PK/BK
1
2
C300
2
1
C301
1
2
C302
P35 18 OR/VT
P36 18 PK/VT
P36 18 PK/VT
P35 18 OR/VT
P35 18 OR/VT
P36 18 PK/VT
3
1
RIGHT REAR DOOR POWER LOCK MOTOR
1
3
LEFT REAR DOOR POWER LOCK MOTOR
1
2
LIFTGATE POWER LOCK MOTOR

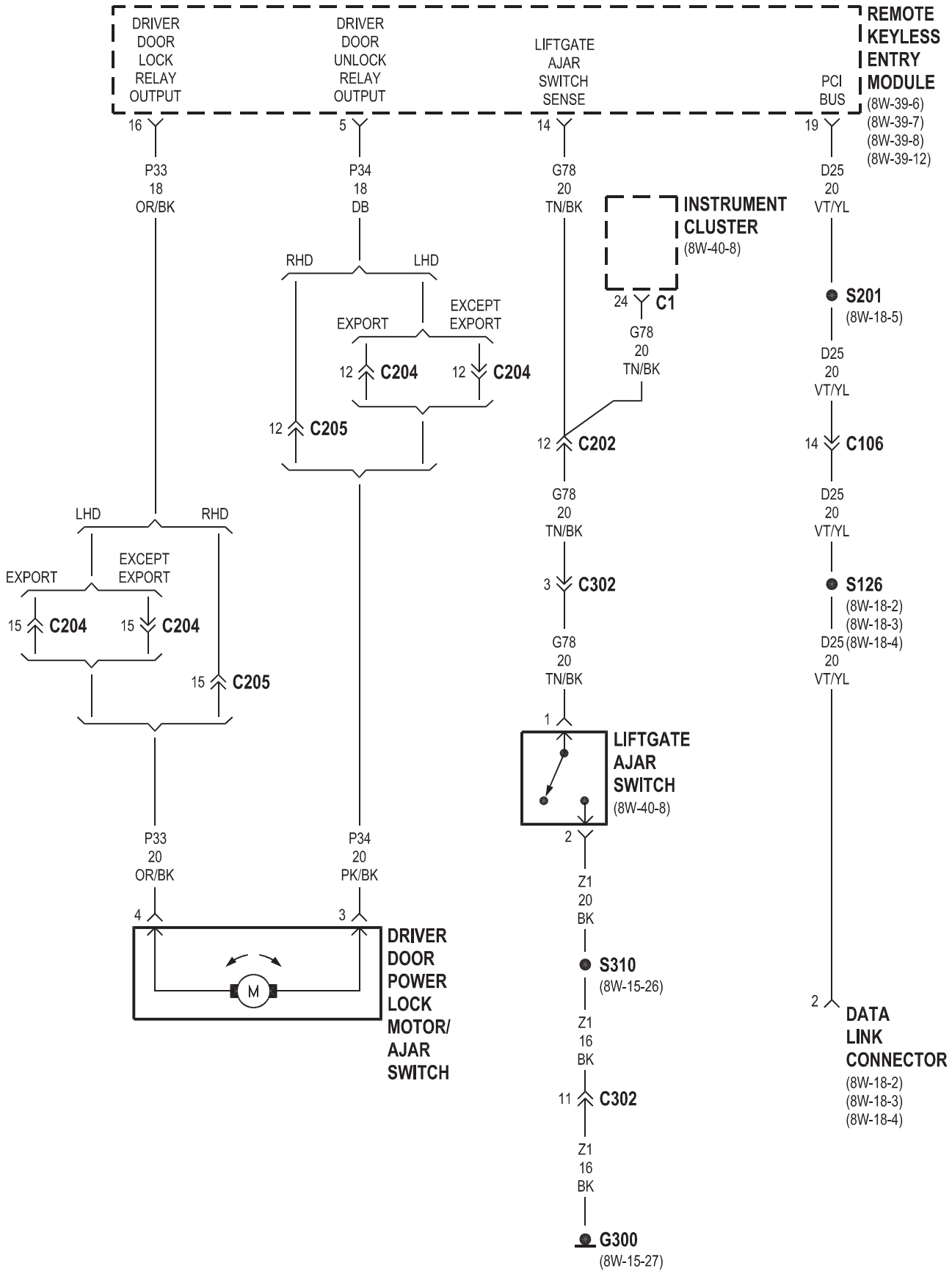
REMOTE KEYLESS ENTRY MODULE
(8W-39-6)
(8W-39-7)
(8W-39-8)
(8W-39-12)
DRIVER DOOR LOCK RELAY OUTPUT
DRIVER DOOR UNLOCK RELAY OUTPUT
LIFTGATE AJAR SWITCH SENSE
PCI BUS
16
5
14
19
P33 18 OR/BK
P34 18 DB
G78 20 TN/BK
D25 20 VT/YL
INSTRUMENT CLUSTER
(8W-40-8)
24 C1
G78 20 TN/BK
S201
(8W-18-5)
D25 20 VT/YL
RHD
LHD
EXPORT
EXCEPT EXPORT
12 C204
12 C204
12 C205
12 C202
14 C106
D25 20 VT/YL
G78 20 TN/BK
LHD
RHD
EXPORT
EXCEPT EXPORT
15 C204
15 C204
15 C205
3 C302
S126
(8W-18-2)
(8W-18-3)
(8W-18-4)
D25 20 VT/YL
G78 20 TN/BK
1
LIFTGATE AJAR SWITCH
(8W-40-8)
2
P33 20 OR/BK
P34 20 PK/BK
4
3
M
DRIVER DOOR POWER LOCK MOTOR/ AJAR SWITCH
Z1 20 BK
S310
(8W-15-26)
Z1 16 BK
11 C302
Z1 16 BK
G300
(8W-15-27)
2
DATA LINK CONNECTOR
(8W-18-2)
(8W-18-3)
(8W-18-4)

LHD

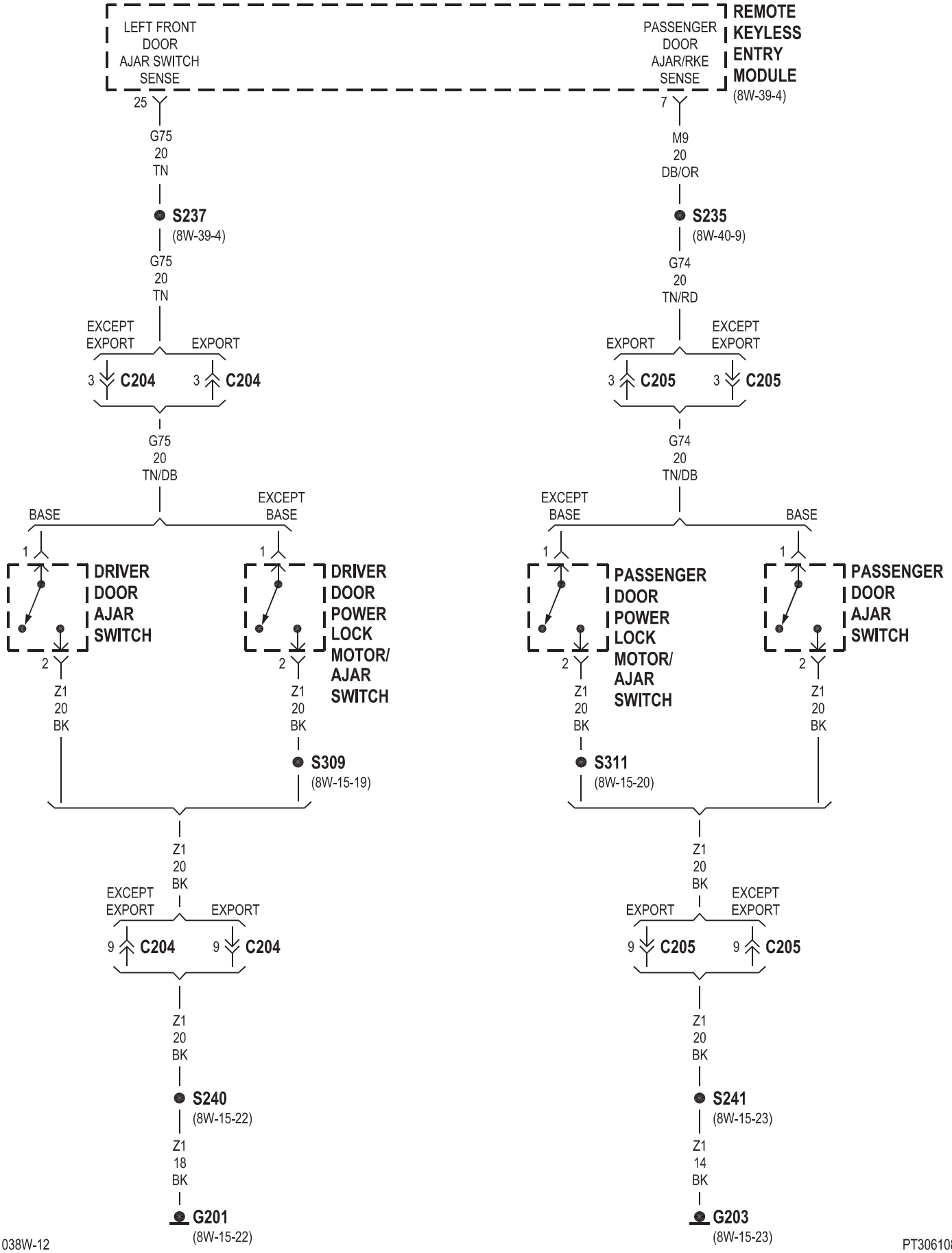
REMOTE KEYLESS ENTRY MODULE
(8W-39-4)
LEFT FRONT DOOR AJAR SWITCH SENSE
PASSENGER DOOR AJAR/RKE SENSE
25
7
G75 20 TN
M9 20 DB/OR
S237
(8W-39-4)
S235
(8W-40-9)
G75 20 TN
G74 20 TN/RD
EXCEPT EXPORT
EXPORT
3 C204
3 C204
EXPORT
EXCEPT EXPORT
3 C205
3 C205
G75 20 TN/DB
G74 20 TN/DB
BASE
EXCEPT BASE
EXCEPT BASE
BASE
1
2
DRIVER DOOR AJAR SWITCH
DRIVER DOOR POWER LOCK MOTOR/ AJAR SWITCH
PASSENGER DOOR POWER LOCK MOTOR/ AJAR SWITCH
PASSENGER DOOR AJAR SWITCH
Z1 20 BK
S309
(8W-15-19)
S311
(8W-15-20)
Z1 20 BK
EXCEPT EXPORT
EXPORT
9 C204
9 C204
EXPORT
EXCEPT EXPORT
9 C205
9 C205
Z1 20 BK
S240
(8W-15-22)
S241
(8W-15-23)
Z1 18 BK
Z1 14 BK
G201
(8W-15-22)
G203
(8W-15-23)

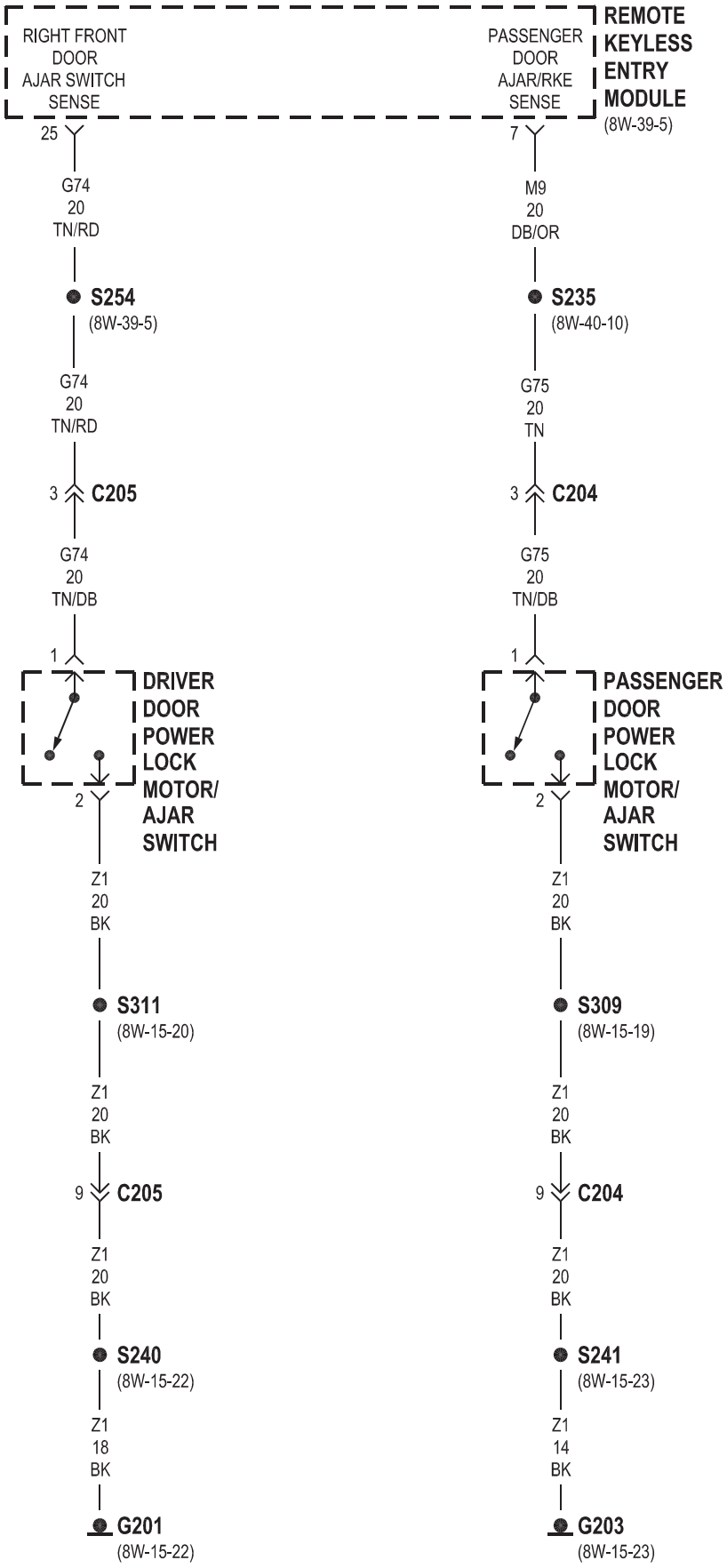
RIGHT FRONT DOOR AJAR SWITCH SENSE
PASSENGER DOOR AJAR/RKE SENSE
REMOTE KEYLESS ENTRY MODULE
(8W-39-5)
25
7
G74 20 TN/RD
M9 20 DB/OR
S254
(8W-39-5)
S235
(8W-40-10)
G74 20 TN/RD
G75 20 TN
3
C205
3
C204
G74 20 TN/DB
G75 20 TN/DB
1
1
DRIVER DOOR POWER LOCK MOTOR/ AJAR SWITCH
PASSENGER DOOR POWER LOCK MOTOR/ AJAR SWITCH
2
2
Z1 20 BK
Z1 20 BK
S311
(8W-15-20)
S309
(8W-15-19)
Z1 20 BK
Z1 20 BK
9
C205
9
C204
Z1 20 BK
Z1 20 BK
S240
(8W-15-22)
S241
(8W-15-23)
Z1 18 BK
Z1 14 BK
G201
(8W-15-22)
G203
(8W-15-23)

8W-62 POWER MIRRORS

Component	Page
Fuse 2	8W-62-2
Fuse 8	8W-62-3
Fuse 13	8W-62-2
Fuse 18	8W-62-3
Fuse Block	8W-62-2, 3
G201	8W-62-2, 4, 5, 6
G203	8W-62-4, 5, 6
Headlamp Switch	8W-62-2
Left Power Mirror	8W-62-3, 4, 5, 6, 7
Mirror Switch	8W-62-6
Power	8W-62-6
Power Distribution Center	8W-62-3
Power Mirror Switch	8W-62-2, 4, 5, 7
Rear Window Defogger Switch	8W-62-3
Right Power Mirror	8W-62-3, 4, 5, 6, 7

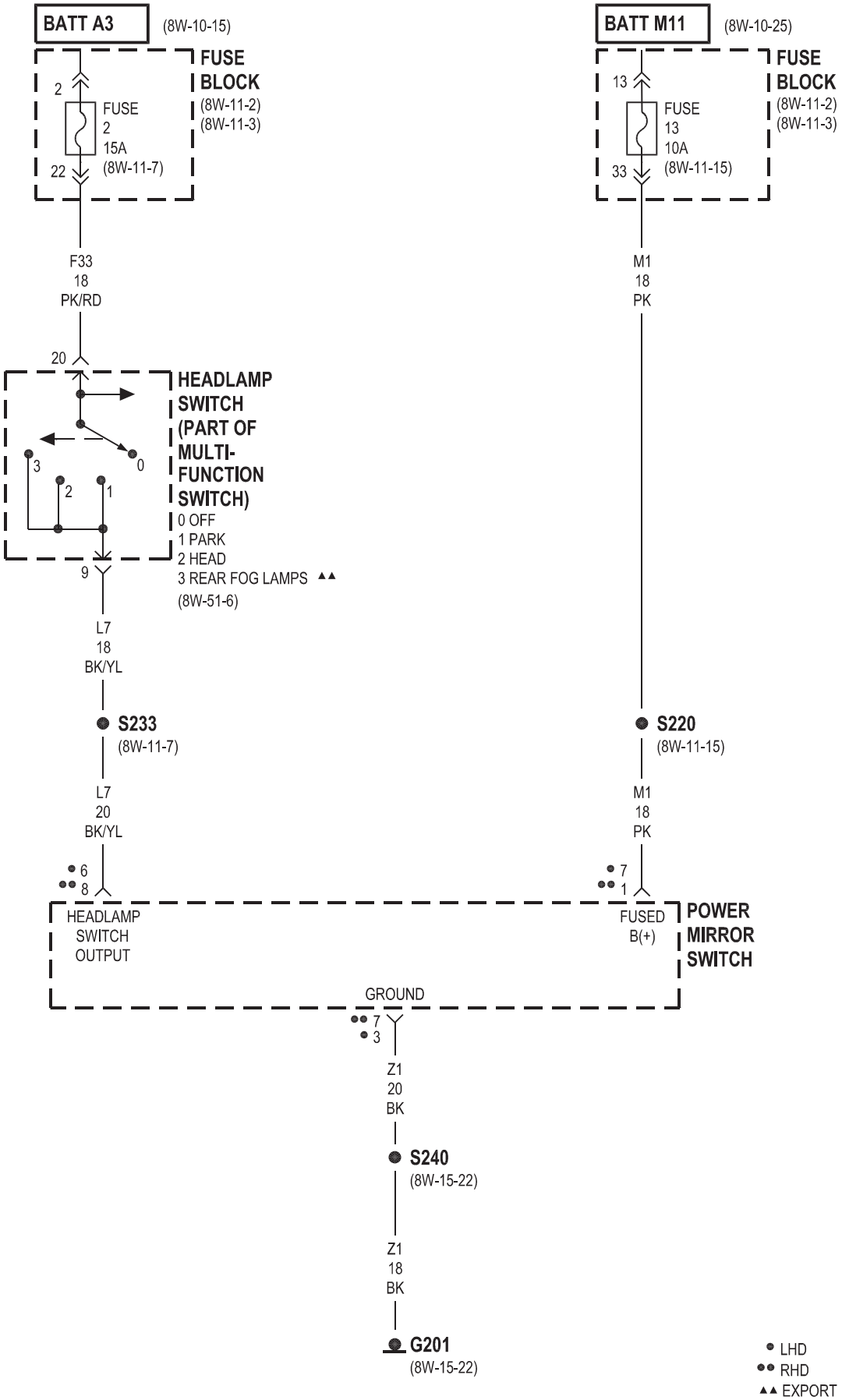
BATT A3
(8W-10-15)
FUSE BLOCK
(8W-11-2)
(8W-11-3)
2
FUSE
2
15A
(8W-11-7)
22
F33
18
PK/RD
20
HEADLAMP SWITCH (PART OF MULTI-FUNCTION SWITCH)
0 OFF
1 PARK
2 HEAD
3 REAR FOG LAMPS ▲▲
(8W-51-6)
3
2
1
0
9
L7
18
BK/YL
S233
(8W-11-7)
L7
20
BK/YL
6
8
BATT M11
(8W-10-25)
FUSE BLOCK
(8W-11-2)
(8W-11-3)
13
FUSE
13
10A
(8W-11-15)
33
M1
18
PK
S220
(8W-11-15)
M1
18
PK
7
1
HEADLAMP SWITCH OUTPUT
FUSED B(+)
POWER MIRROR SWITCH
GROUND
7
3
Z1
20
BK
S240
(8W-15-22)
Z1
18
BK
G201
(8W-15-22)
LHD
RHD
▲▲ EXPORT

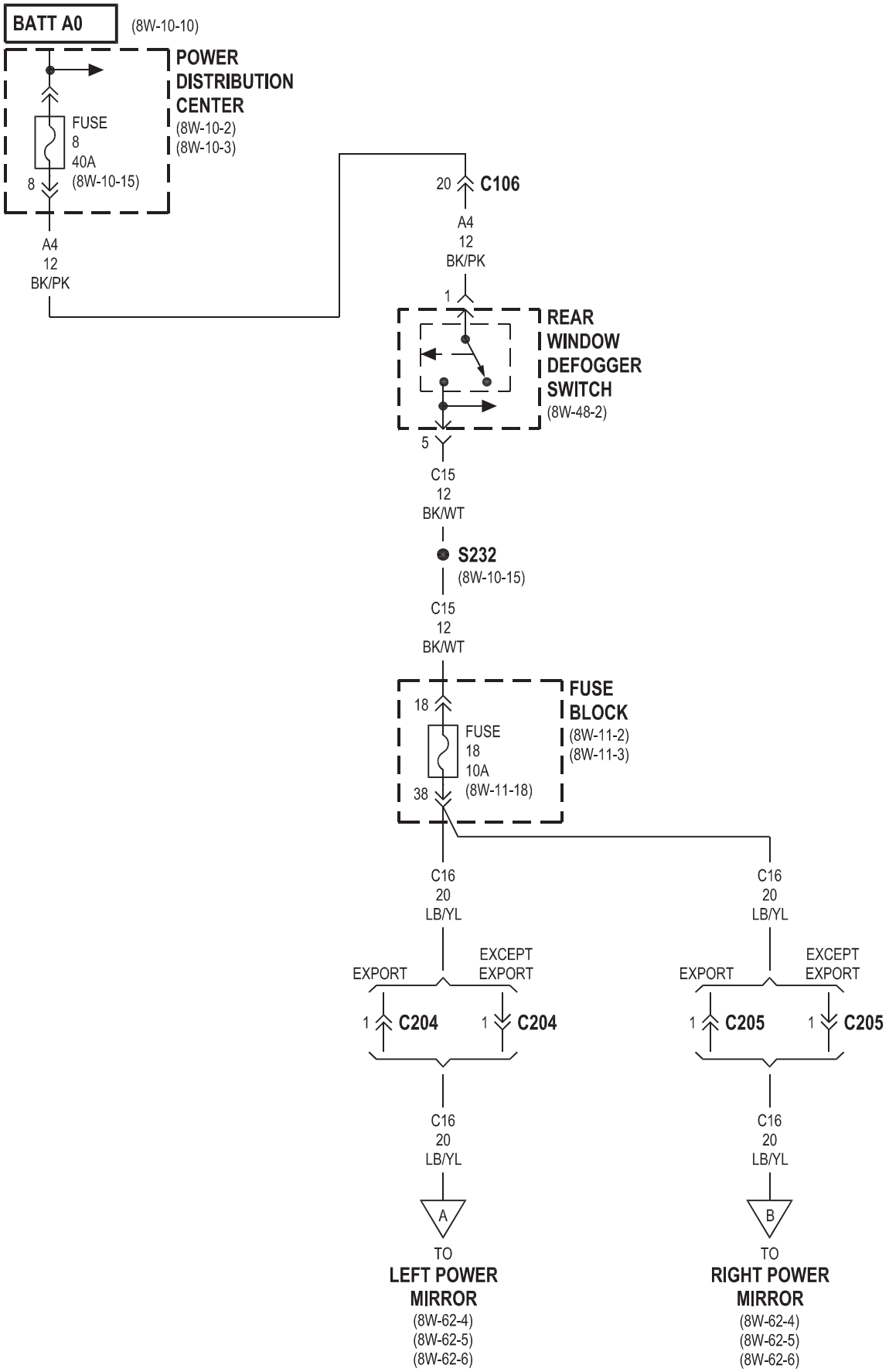
BATT A0
(8W-10-10)
POWER DISTRIBUTION CENTER
(8W-10-2)
(8W-10-3)
FUSE
8
40A
(8W-10-15)
8
A4
12
BK/PK
20
C106
A4
12
BK/PK
1
REAR WINDOW DEFOGGER SWITCH
(8W-48-2)
5
C15
12
BK/WT
S232
(8W-10-15)
C15
12
BK/WT
18
FUSE
18
10A
(8W-11-18)
38
FUSE BLOCK
(8W-11-2)
(8W-11-3)
C16
20
LB/YL
C16
20
LB/YL
EXPORT
EXCEPT EXPORT
EXPORT
EXCEPT EXPORT
1
C204
1
C204
1
C205
1
C205
C16
20
LB/YL
C16
20
LB/YL
A
B
TO
LEFT POWER MIRROR
(8W-62-4)
(8W-62-5)
(8W-62-6)
TO
RIGHT POWER MIRROR
(8W-62-4)
(8W-62-5)
(8W-62-6)

LHD EXPORT

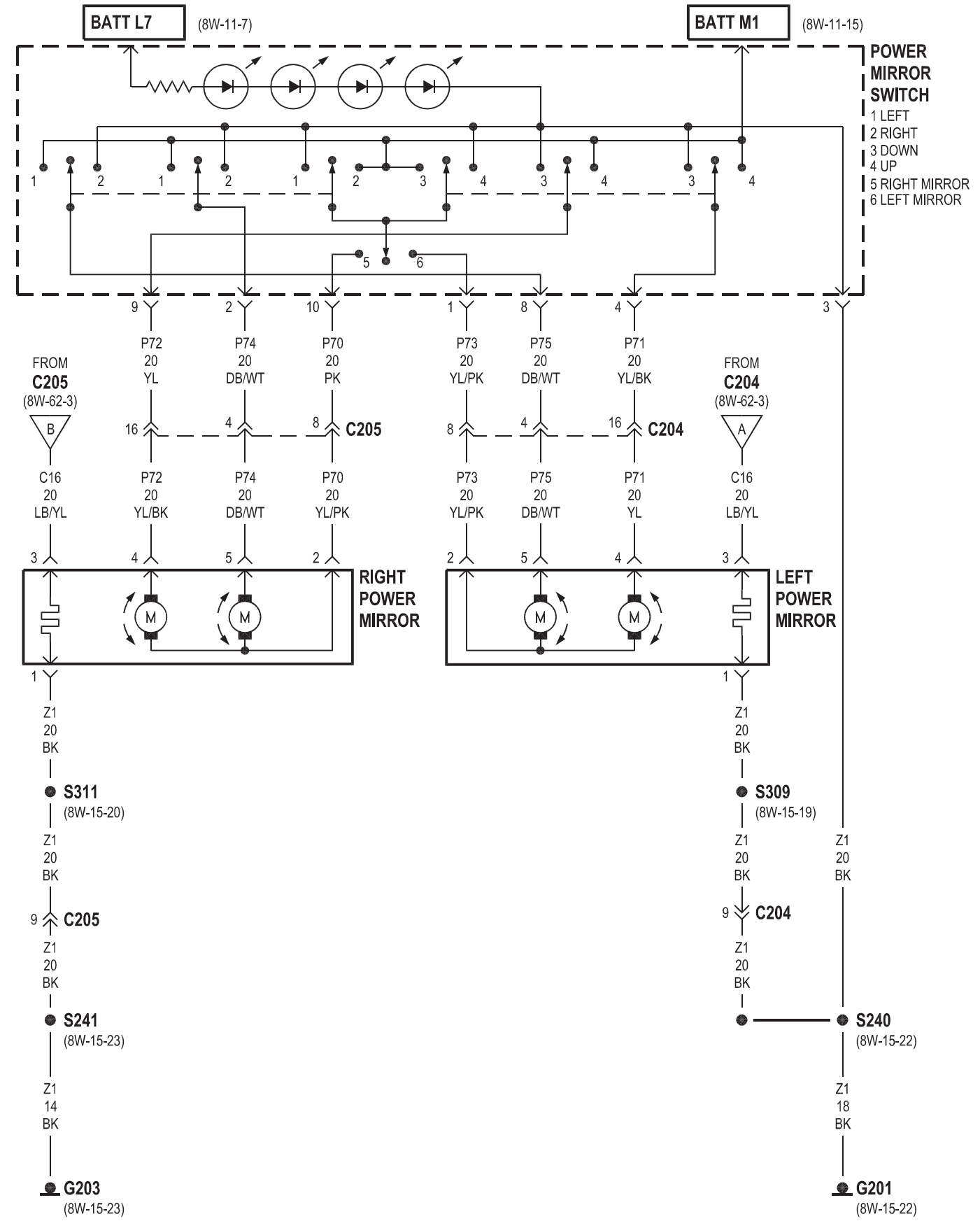
BATT L7
(8W-11-7)
BATT M1
(8W-11-15)
POWER MIRROR SWITCH
1 LEFT
2 RIGHT
3 DOWN
4 UP
5 RIGHT MIRROR
6 LEFT MIRROR
P72 20 YL
P74 20 DB/WT
P70 20 PK
P73 20 YL/PK
P75 20 DB/WT
P71 20 YL/BK
FROM C205 (8W-62-3)
FROM C204 (8W-62-3)
C205
C204
C16 20 LB/YL
P72 20 YL/BK
P74 20 DB/WT
P70 20 YL/PK
P73 20 YL/PK
P75 20 DB/WT
P71 20 YL
C16 20 LB/YL
RIGHT POWER MIRROR
LEFT POWER MIRROR
Z1 20 BK
S311
(8W-15-20)
S309
(8W-15-19)
C205
C204
S241
(8W-15-23)
S240
(8W-15-22)
Z1 14 BK
Z1 18 BK
G203
(8W-15-23)
G201
(8W-15-22)

LHD EXCEPT EXPORT

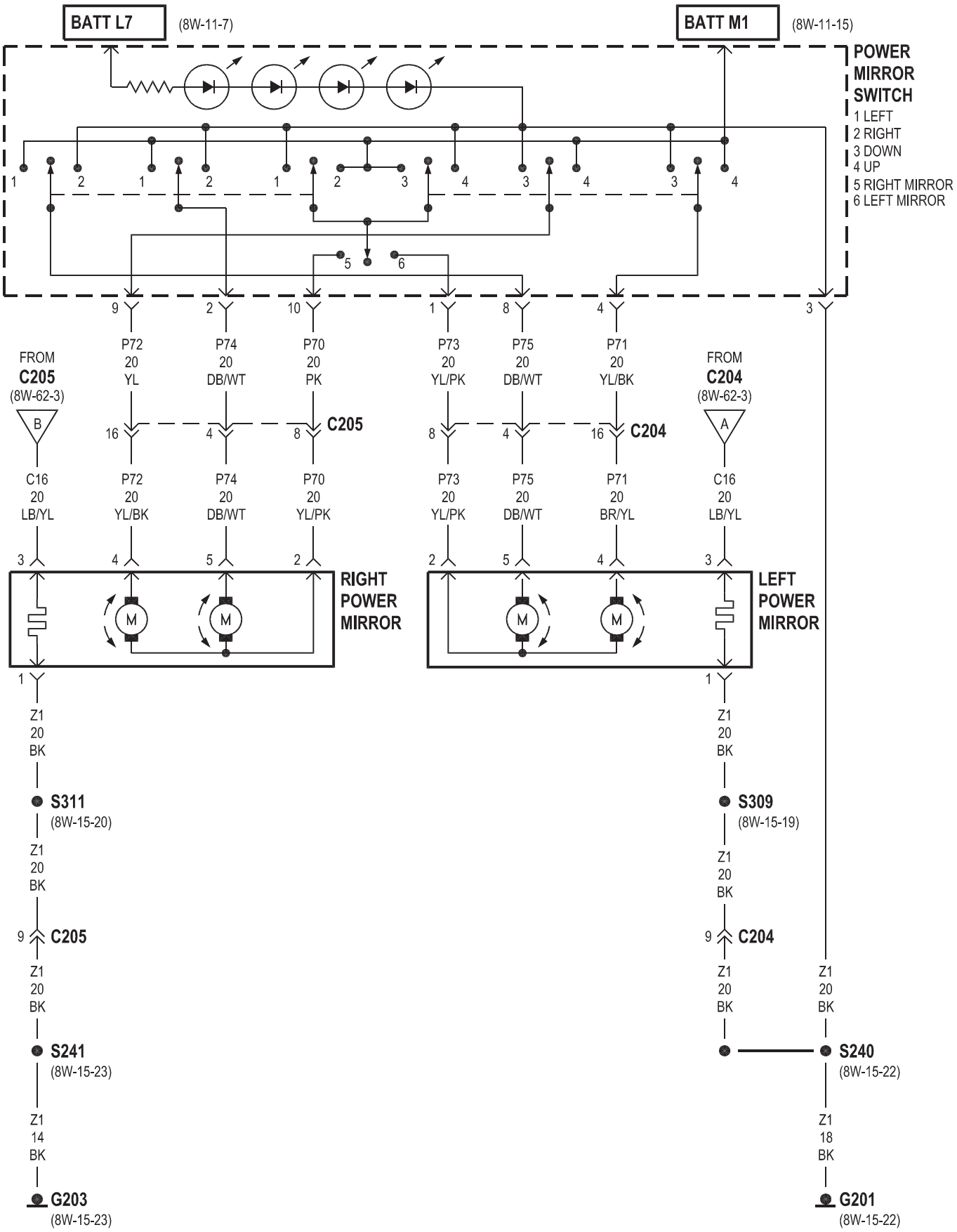

RHD

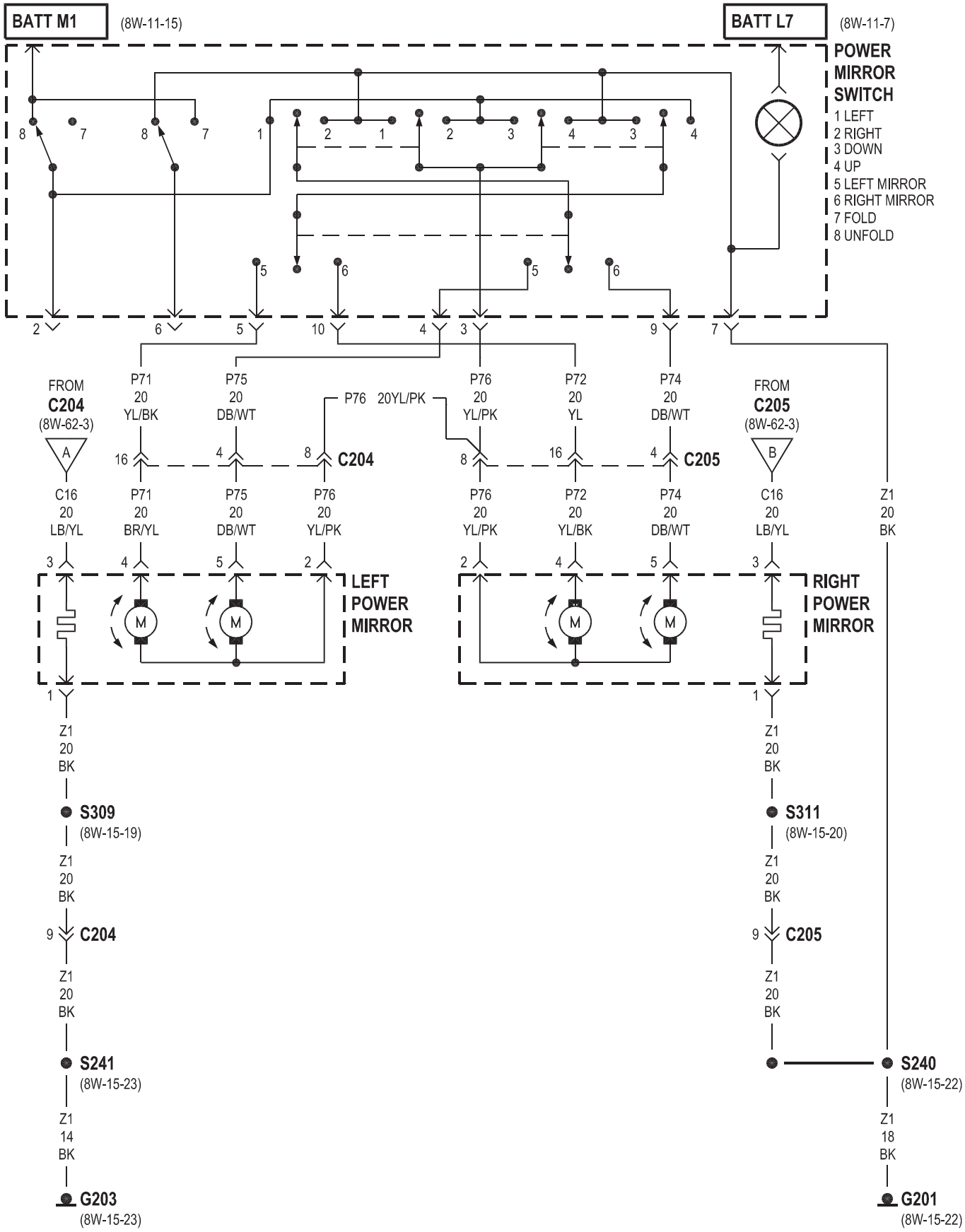
BATT M1
(8W-11-15)
BATT L7
(8W-11-7)
POWER MIRROR SWITCH
1 LEFT
2 RIGHT
3 DOWN
4 UP
5 LEFT MIRROR
6 RIGHT MIRROR
7 FOLD
8 UNFOLD
FROM C204 (8W-62-3)
P71 20 YL/BK
P75 20 DB/WT
P76 20YL/PK
P76 20 YL/PK
P72 20 YL
P74 20 DB/WT
FROM C205 (8W-62-3)
C204
C205
C16 20 LB/YL
P71 20 BR/YL
P75 20 DB/WT
P76 20 YL/PK
P76 20 YL/PK
P72 20 YL/BK
P74 20 DB/WT
C16 20 LB/YL
Z1 20 BK
LEFT POWER MIRROR
RIGHT POWER MIRROR
Z1 20 BK
S309
(8W-15-19)
Z1 20 BK
C204
Z1 20 BK
S241
(8W-15-23)
Z1 14 BK
G203
(8W-15-23)
Z1 20 BK
S311
(8W-15-20)
Z1 20 BK
C205
Z1 20 BK
S240
(8W-15-22)
Z1 18 BK
G201
(8W-15-22)

POWER FOLDING MIRRORS

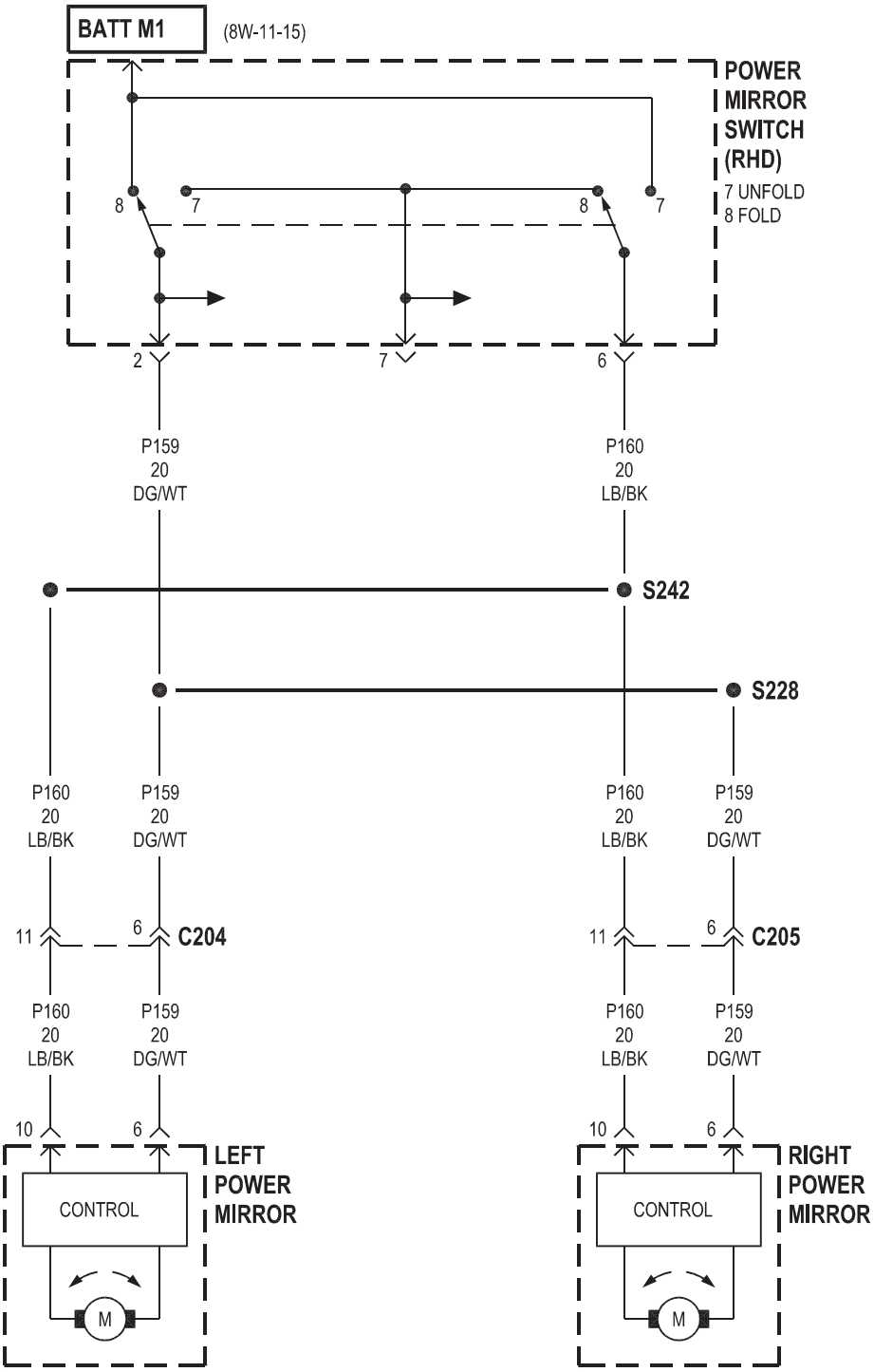

8W-63 POWER SEAT

Component	Page
Driver Heated Seat Back	8W-63-5
Driver Heated Seat Cushion	8W-63-5
Driver Heated Seat Switch	8W-63-5
Fuse 4	8W-63-2
Fuse 6	8W-63-2
Fuse 17	8W-63-2
Fuse Block	8W-63-2
G201	8W-63-2
G300	8W-63-3, 4, 5, 6
Heated Seat Module	8W-63-5, 6
Heated Seat Relay	8W-63-2
Passenger Heated Seat Back	8W-63-6
Passenger Heated Seat Cushion	8W-63-5, 6
Passenger Heated Seat Switch	8W-63-5, 6
Power Distribution Center	8W-63-2
Power Seat Motor	8W-63-3, 4
Power Seat Switch	8W-63-3, 4

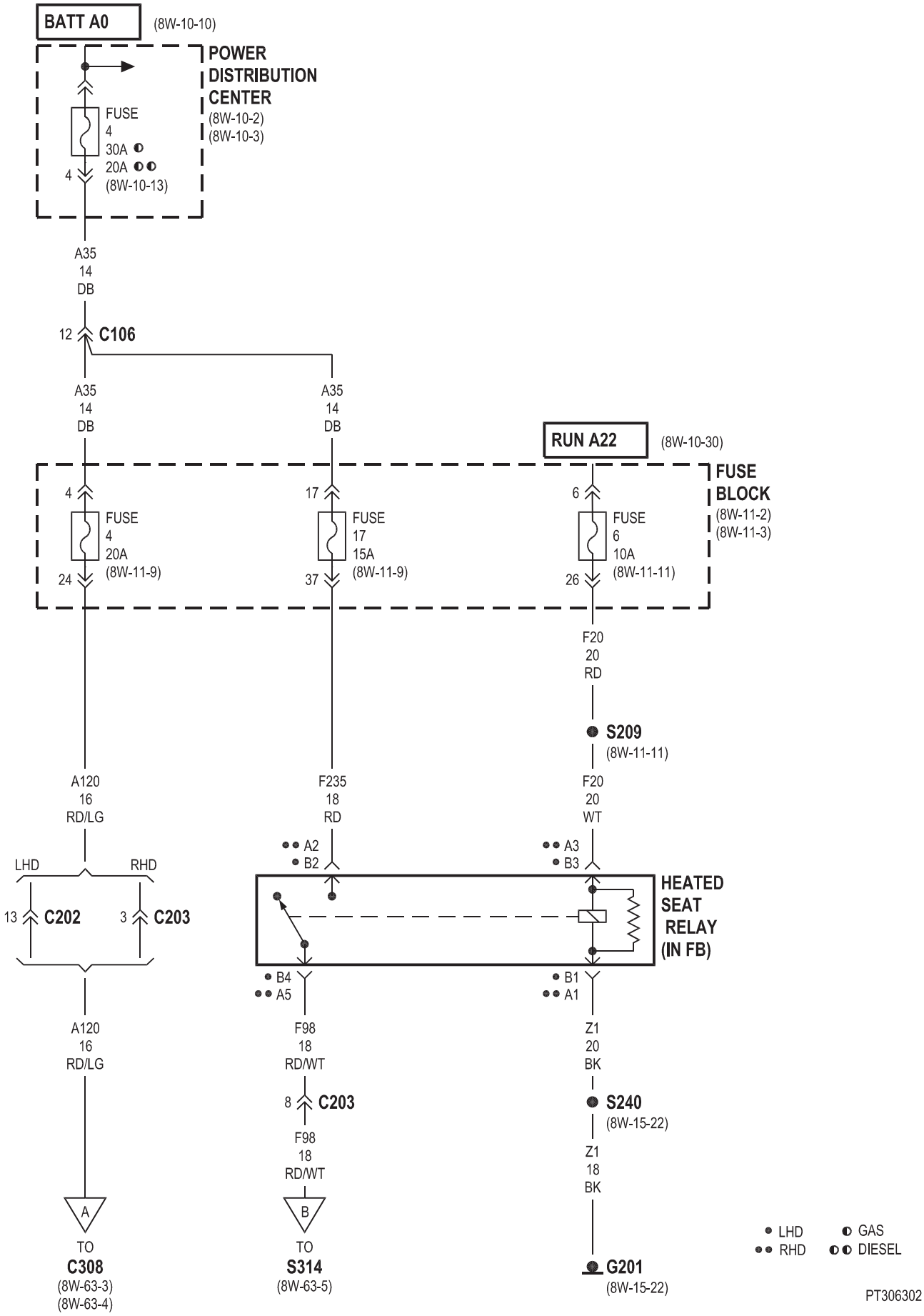
BATT A0
(8W-10-10)
POWER DISTRIBUTION CENTER
(8W-10-2)
(8W-10-3)
FUSE
4
30A
20A
(8W-10-13)
4
A35
14
DB
12
C106
A35
14
DB
A35
14
DB
RUN A22
(8W-10-30)
FUSE BLOCK
(8W-11-2)
(8W-11-3)
4
FUSE
4
20A
(8W-11-9)
24
17
FUSE
17
15A
(8W-11-9)
37
6
FUSE
6
10A
(8W-11-11)
26
F20
20
RD
S209
(8W-11-11)
A120
16
RD/LG
F235
18
RD
F20
20
WT
A2
B2
A3
B3
LHD
RHD
13
C202
3
C203
HEATED SEAT RELAY (IN FB)
B4
A5
B1
A1
A120
16
RD/LG
F98
18
RD/WT
Z1
20
BK
8
C203
S240
(8W-15-22)
F98
18
RD/WT
Z1
18
BK
A
B
TO
C308
(8W-63-3)
(8W-63-4)
TO
S314
(8W-63-5)
G201
(8W-15-22)
LHD
RHD
GAS
DIESEL

EXCEPT HEATED SEATS

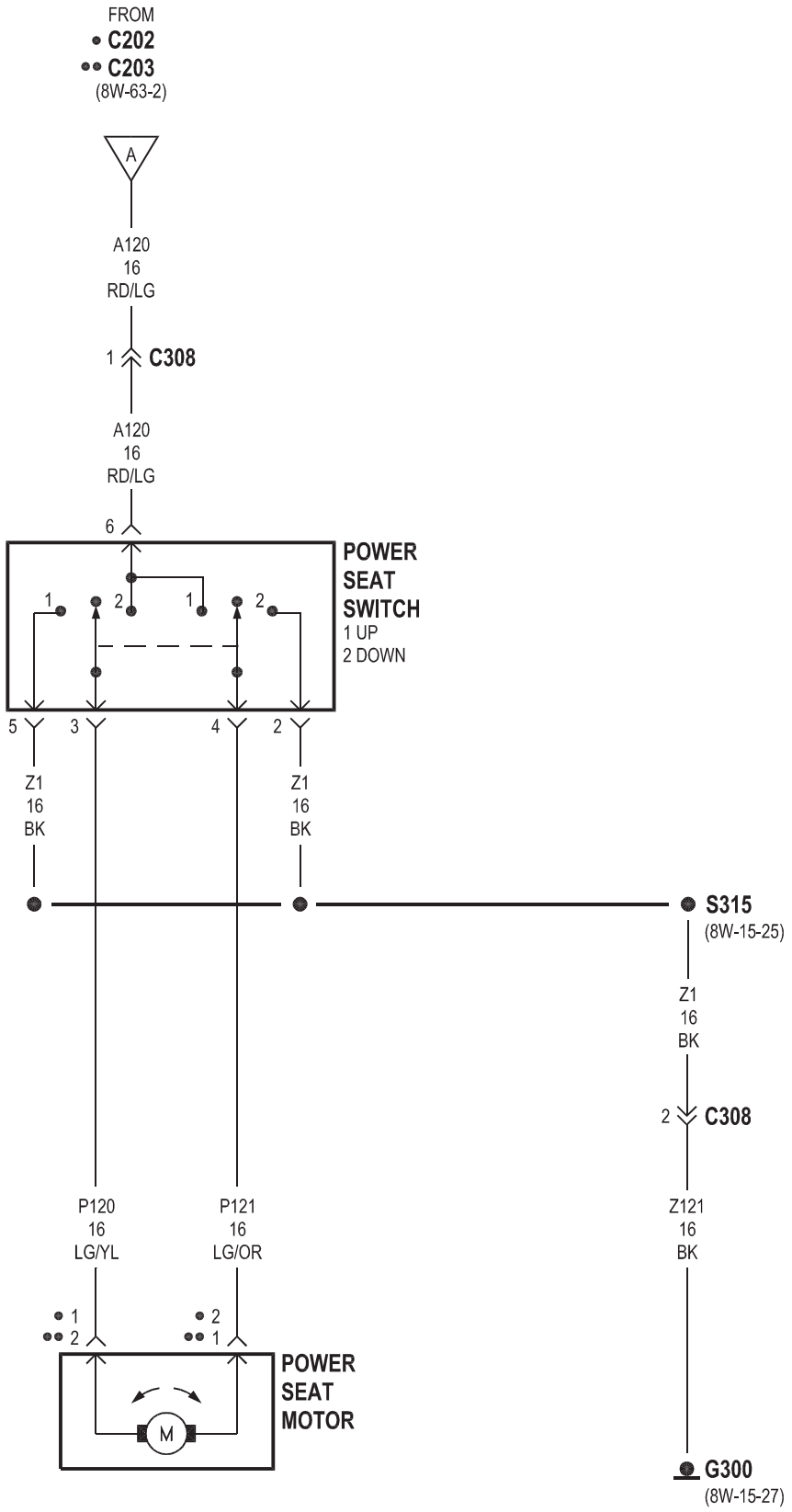

• LHD
•• RHD

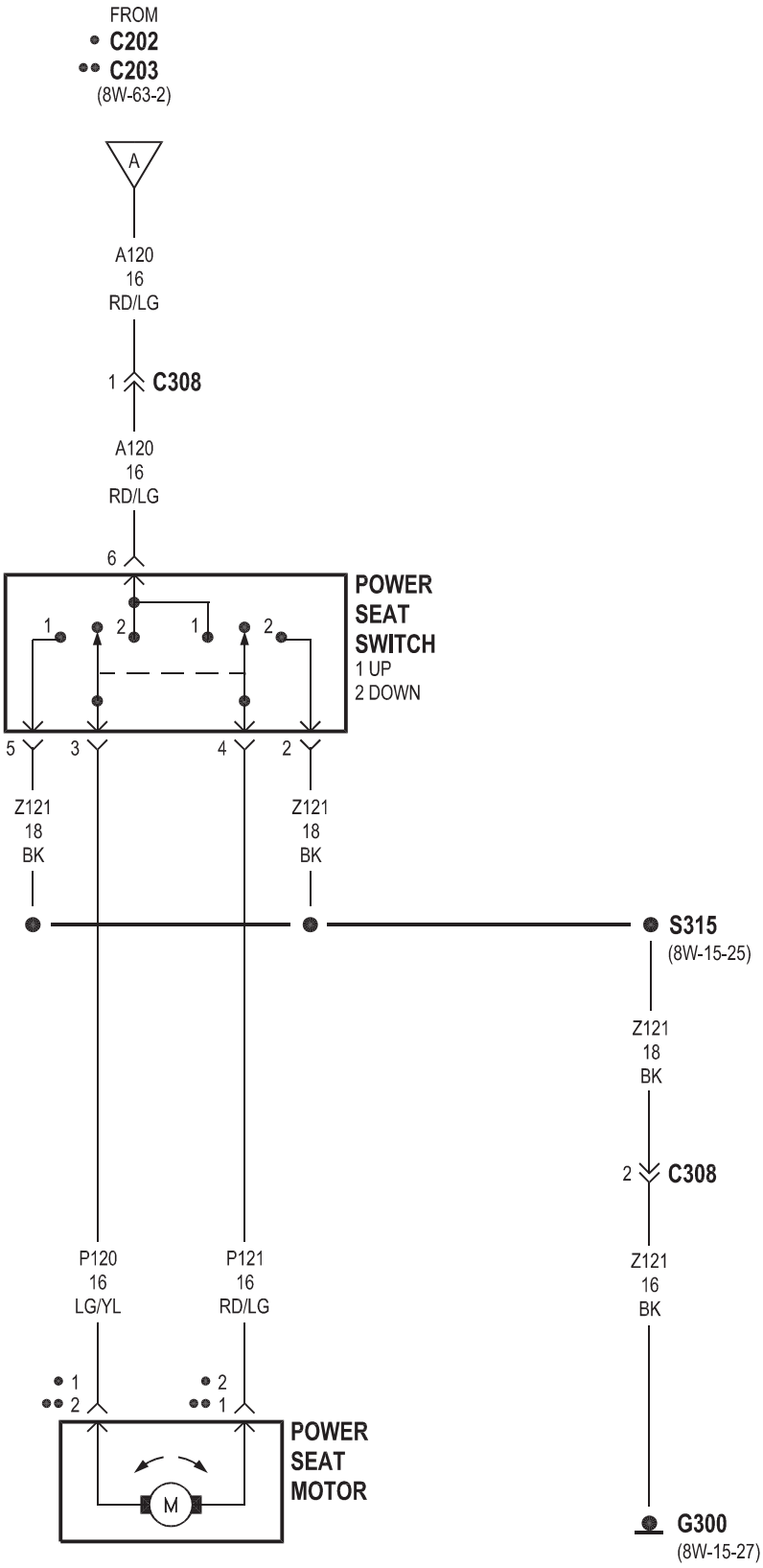
FROM
• C202
•• C203
(8W-63-2)
A
A120
16
RD/LG
1
C308
A120
16
RD/LG
6
POWER
SEAT
SWITCH
1 UP
2 DOWN
1
2
1
2
5
3
4
2
Z121
18
BK
Z121
18
BK
S315
(8W-15-25)
Z121
18
BK
2
C308
P120
16
LG/YL
P121
16
RD/LG
Z121
16
BK
• 1
•• 2
• 2
•• 1
POWER
SEAT
MOTOR
M
G300
(8W-15-27)

• LHD
•• RHD

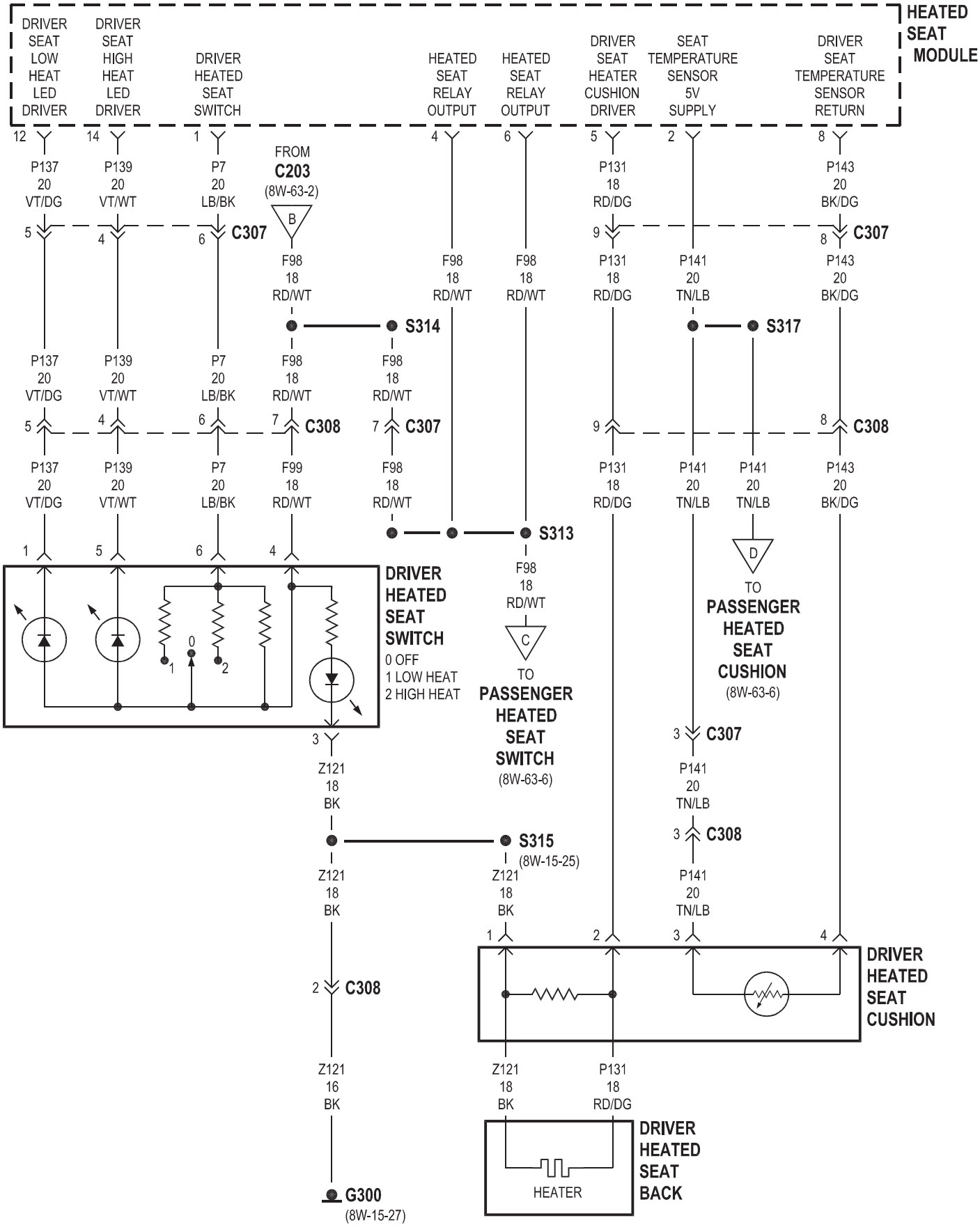
HEATED SEAT MODULE
DRIVER SEAT LOW HEAT LED DRIVER
DRIVER SEAT HIGH HEAT LED DRIVER
DRIVER HEATED SEAT SWITCH
HEATED SEAT RELAY OUTPUT
HEATED SEAT RELAY OUTPUT
DRIVER SEAT HEATER CUSHION DRIVER
SEAT TEMPERATURE SENSOR 5V SUPPLY
DRIVER SEAT TEMPERATURE SENSOR RETURN
12
14
1
4
6
5
2
8
P137 20 VT/DG
P139 20 VT/WT
P7 20 LB/BK
FROM C203 (8W-63-2)
B
P131 18 RD/DG
P143 20 BK/DG
5
4
6
C307
9
8
C307
F98 18 RD/WT
F98 18 RD/WT
F98 18 RD/WT
P131 18 RD/DG
P141 20 TN/LB
P143 20 BK/DG
S314
S317
P137 20 VT/DG
P139 20 VT/WT
P7 20 LB/BK
F98 18 RD/WT
F98 18 RD/WT
5
4
6
7
C308
7
C307
9
8
C308
P137 20 VT/DG
P139 20 VT/WT
P7 20 LB/BK
F99 18 RD/WT
F98 18 RD/WT
P131 18 RD/DG
P141 20 TN/LB
P141 20 TN/LB
P143 20 BK/DG
S313
1
5
6
4
D
TO PASSENGER HEATED SEAT CUSHION (8W-63-6)
DRIVER HEATED SEAT SWITCH
0 OFF
1 LOW HEAT
2 HIGH HEAT
0
1
2
F98 18 RD/WT
C
TO PASSENGER HEATED SEAT SWITCH (8W-63-6)
3
Z121 18 BK
3
C307
P141 20 TN/LB
3
C308
S315 (8W-15-25)
Z121 18 BK
Z121 18 BK
P141 20 TN/LB
1
2
3
4
DRIVER HEATED SEAT CUSHION
2
C308
Z121 16 BK
Z121 18 BK
P131 18 RD/DG
DRIVER HEATED SEAT BACK
HEATER
G300 (8W-15-27)

HEATED SEATS

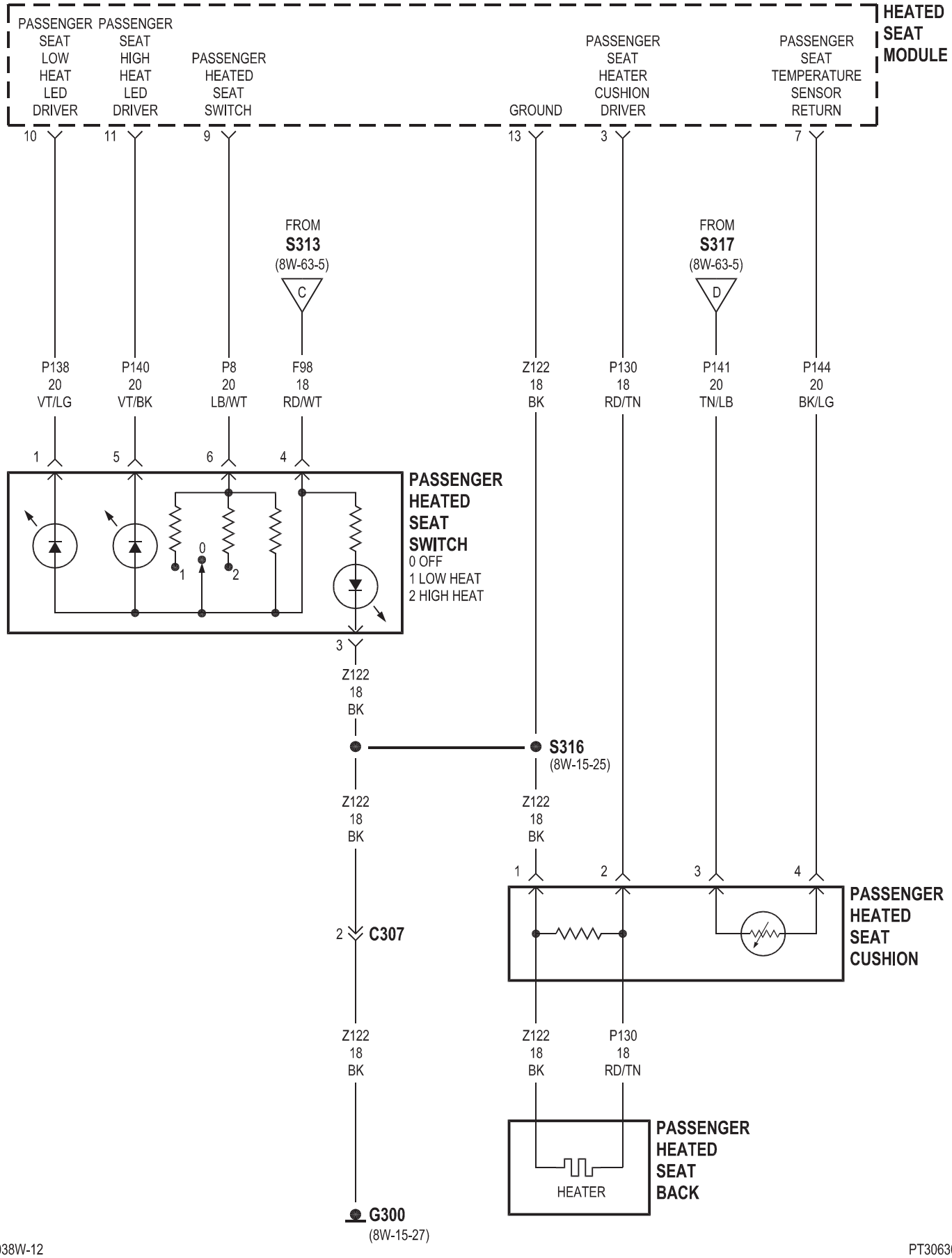

8W-64 POWER SUNROOF

Component	Page
Fuse 14	8W-64-2
Fuse Block	8W-64-2
G201	8W-64-2
Power Sunroof Module	8W-64-2
Sunroof Motor	8W-64-2
Sunroof Switch	8W-64-2

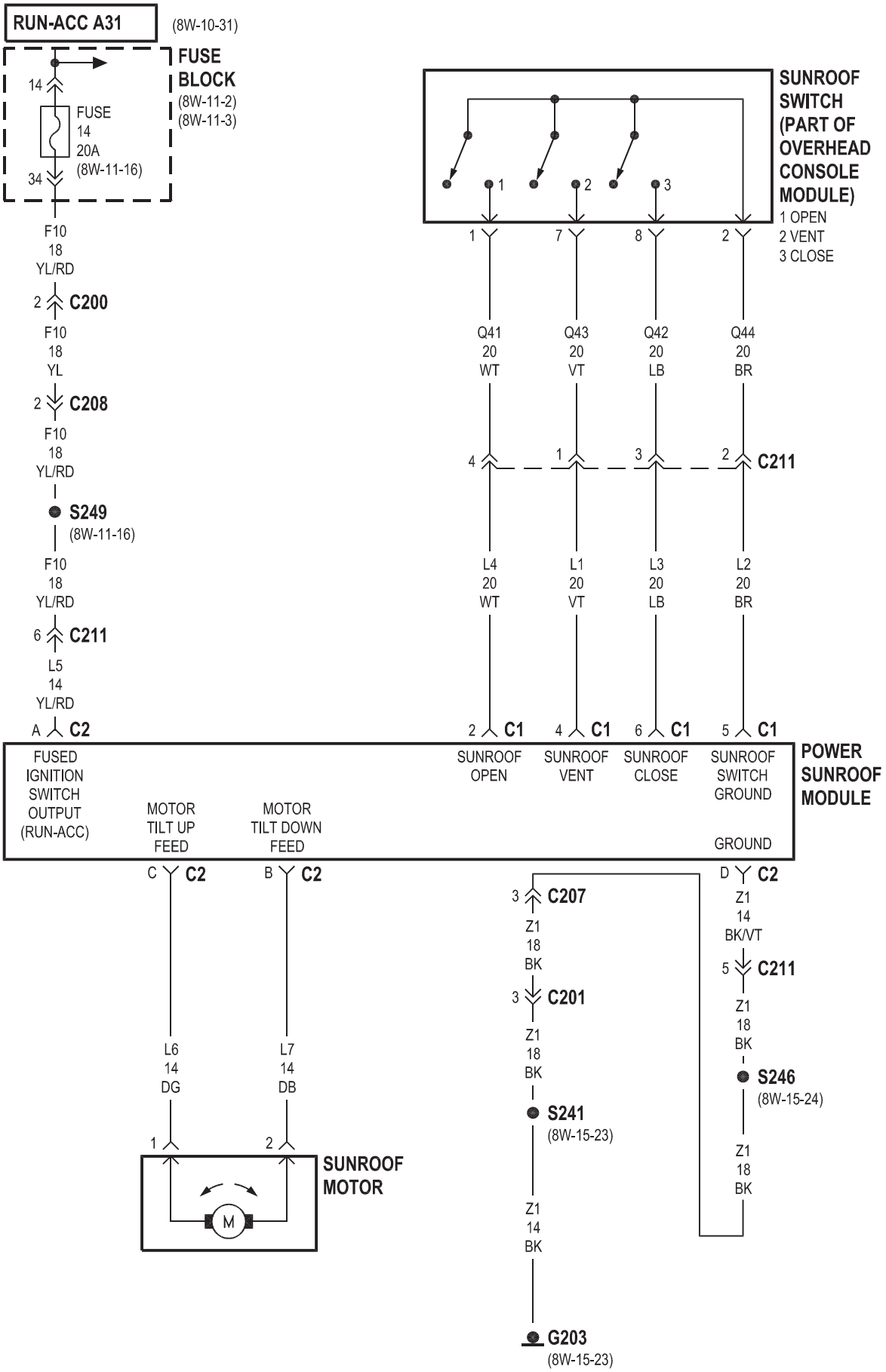
RUN-ACC A31
(8W-10-31)
FUSE BLOCK
(8W-11-2)
(8W-11-3)
14
FUSE 14 20A
(8W-11-16)
34
F10 18 YL/RD
2 C200
F10 18 YL
2 C208
F10 18 YL/RD
S249
(8W-11-16)
F10 18 YL/RD
6 C211
L5 14 YL/RD
A C2
SUNROOF SWITCH (PART OF OVERHEAD CONSOLE MODULE)
1 OPEN
2 VENT
3 CLOSE
1 7 8 2
Q41 20 WT
Q43 20 VT
Q42 20 LB
Q44 20 BR
4 1 3 2 C211
L4 20 WT
L1 20 VT
L3 20 LB
L2 20 BR
2 C1 4 C1 6 C1 5 C1
FUSED IGNITION SWITCH OUTPUT (RUN-ACC)
MOTOR TILT UP FEED
MOTOR TILT DOWN FEED
SUNROOF OPEN
SUNROOF VENT
SUNROOF CLOSE
SUNROOF SWITCH GROUND
GROUND
POWER SUNROOF MODULE
C C2
B C2
D C2
3 C207
Z1 18 BK
3 C201
Z1 18 BK
S241
(8W-15-23)
Z1 14 BK
G203
(8W-15-23)
Z1 14 BK/VT
5 C211
Z1 18 BK
S246
(8W-15-24)
Z1 18 BK
L6 14 DG
L7 14 DB
1 2
M
SUNROOF MOTOR

8W-70 SPLICE INFORMATION

Component	Page
S100	8W-10-19, 20
S101	8W-10-8
S102	8W-10-19
S103	8W-10-19
S104	8W-30-16, 17
S106	8W-70-2
S107	8W-70-2
S109	8W-70-3
S111	8W-15-10, 11
S113	8W-15-3, 9, 11
S114	8W-31-3
S115	8W-11-14
S116	8W-11-19
S117	8W-50-6
S118	8W-50-9
S119	8W-10-16
S120	8W-15-13, 15
S121	8W-15-14, 15
S122	8W-18-3
S123	8W-10-12
S124	8W-10-14
S125	8W-11-13
S126	8W-18-2, 3, 4
S128	8W-15-8
S129	8W-10-17
S131	8W-15-4, 5, 6, 7, 8
S132	8W-10-23
S134	8W-10-30
S136	8W-10-23
S138	8W-39-14
S140	8W-15-4, 6
S141	8W-15-10, 11
S142	8W-10-24
S143	8W-15-16
S144	8W-11-8
S146	8W-15-12
S147	8W-10-18
S148	8W-10-18
S149	8W-10-22
S150	8W-10-32
S151	8W-10-32
S152	8W-10-32
S153	8W-10-32
S154	8W-10-26
S155	8W-30-35
S156	8W-15-7, 8
S157	8W-30-38
S158	8W-30-39
S159	8W-30-40
S160	8W-30-40
S161	8W-30-40
S162	8W-30-45
S163	8W-30-45
S164	8W-10-9
S165	8W-10-9
S166	8W-10-9
S167	8W-10-9
S168	8W-10-9
S169	8W-10-9
S170	8W-10-8
S171	8W-10-8
S172	8W-30-31
S173	8W-10-19, 20
S174	8W-52-6
S175	8W-52-6
S176	8W-30-35
S177	8W-15-11
S178	8W-51-2
S179	8W-15-13, 15
S180	8W-15-12
S191	8W-10-22
S192	8W-10-21
S195	8W-10-8
S196	8W-10-8
S201	8W-18-5
S203	8W-52-4
S204	8W-44-5
S205	8W-44-6
S209	8W-11-11
S211	8W-11-16
S212	8W-52-4
S213	8W-15-21
S216	8W-15-18
S220	8W-11-15
S224	8W-11-13
S225	8W-11-6
S226	8W-11-6
S228	8W-62-7
S232	8W-10-15
S233	8W-11-7
S235	8W-40-9, 10
S237	8W-39-4
S239	8W-15-18
S240	8W-15-22
S241	8W-15-23
S242	8W-62-7
S244	8W-11-15
S246	8W-15-24
S247	8W-11-6
S248	8W-44-3
S249	8W-11-16
S254	8W-39-5
S256	8W-11-17
S260	8W-10-25
S301	8W-61-6
S302	8W-61-6
S305	8W-10-16
S306	8W-15-26
S307	8W-11-8
S308	8W-51-3
S309	8W-15-19
S310	8W-15-26
S311	8W-15-20
S312	8W-11-8
S313	8W-63-5
S314	8W-63-5
S315	8W-15-25
S316	8W-15-25
S317	8W-63-5
S320	8W-15-14
S321	8W-60-5

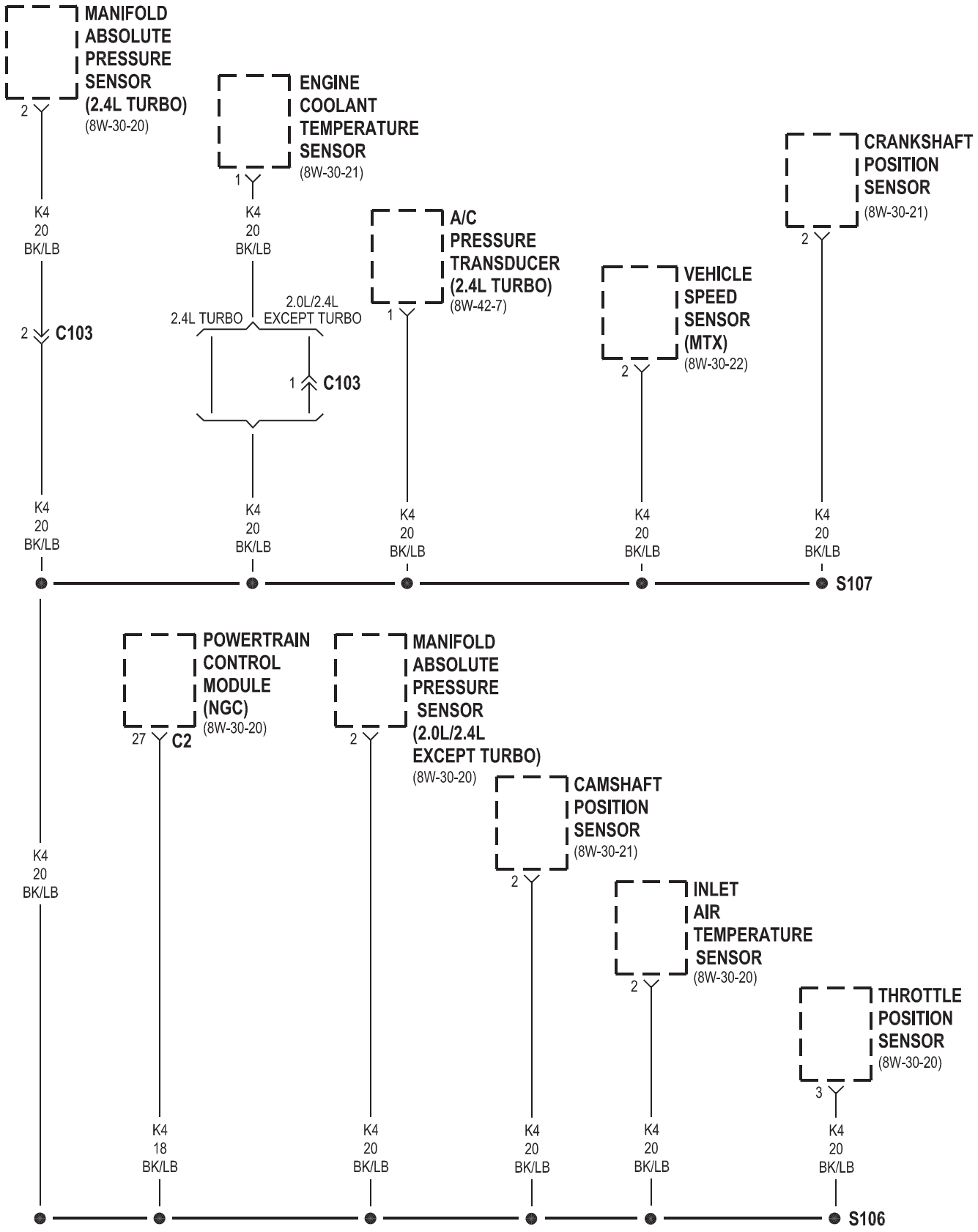
MANIFOLD ABSOLUTE PRESSURE SENSOR (2.4L TURBO)
(8W-30-20)
2
ENGINE COOLANT TEMPERATURE SENSOR
(8W-30-21)
1
CRANKSHAFT POSITION SENSOR
(8W-30-21)
2
K4
20
BK/LB
A/C PRESSURE TRANSDUCER (2.4L TURBO)
(8W-42-7)
1
VEHICLE SPEED SENSOR (MTX)
(8W-30-22)
2
2.4L TURBO
2.0L/2.4L EXCEPT TURBO
2 C103
1 C103
S107
POWERTRAIN CONTROL MODULE (NGC)
(8W-30-20)
27 C2
MANIFOLD ABSOLUTE PRESSURE SENSOR (2.0L/2.4L EXCEPT TURBO)
(8W-30-20)
CAMSHAFT POSITION SENSOR
(8W-30-21)
INLET AIR TEMPERATURE SENSOR
(8W-30-20)
THROTTLE POSITION SENSOR
(8W-30-20)
3
K4
18
BK/LB
S106

2.0L/2.4L

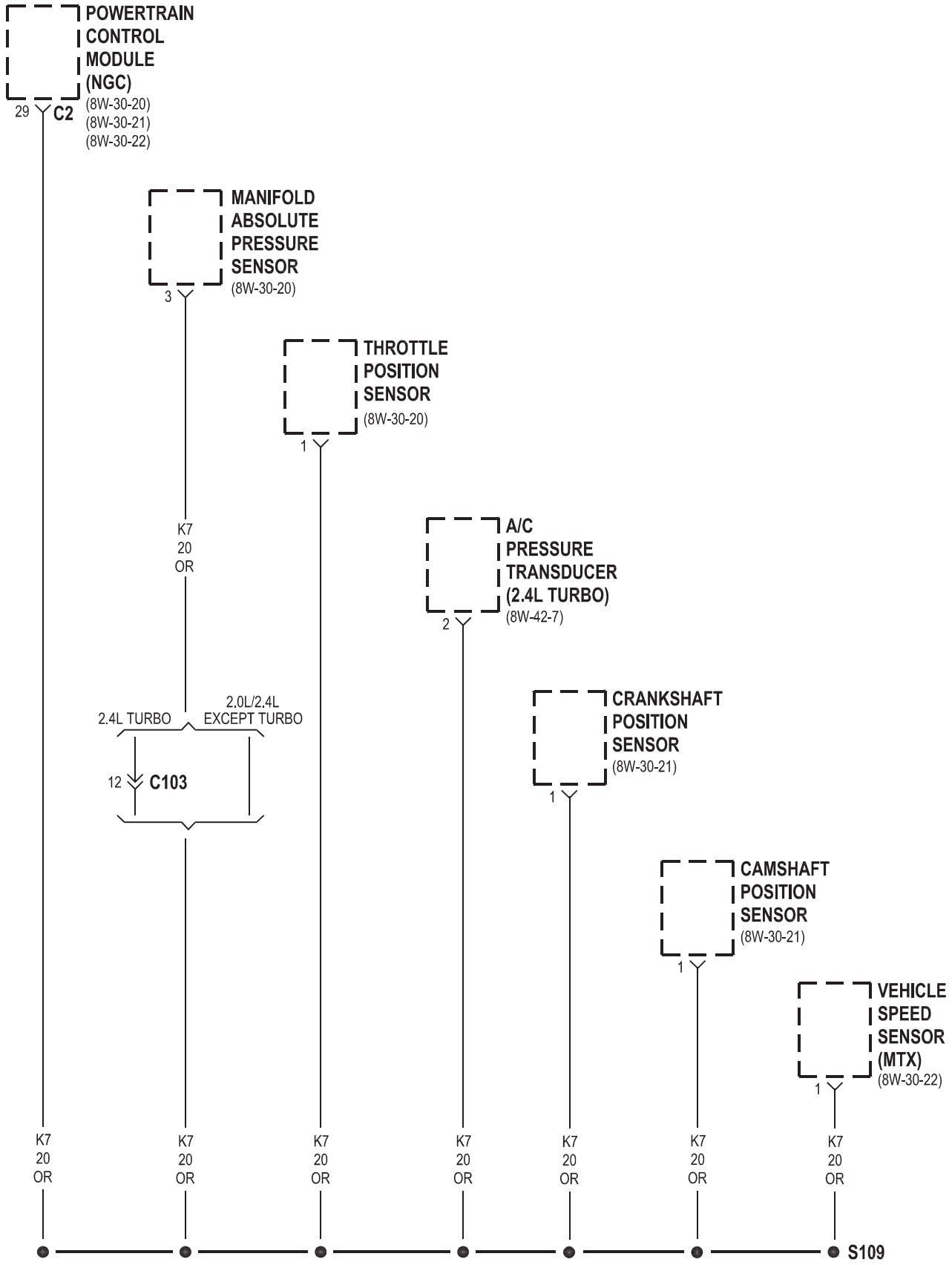
POWERTRAIN CONTROL MODULE (NGC)
(8W-30-20)
(8W-30-21)
(8W-30-22)
29
C2
MANIFOLD ABSOLUTE PRESSURE SENSOR
(8W-30-20)
3
THROTTLE POSITION SENSOR
(8W-30-20)
1
A/C PRESSURE TRANSDUCER (2.4L TURBO)
(8W-42-7)
2
CRANKSHAFT POSITION SENSOR
(8W-30-21)
1
CAMSHAFT POSITION SENSOR
(8W-30-21)
1
VEHICLE SPEED SENSOR (MTX)
(8W-30-22)
1
K7
20
OR
2.4L TURBO
2,0L/2,4L EXCEPT TURBO
12
C103
S109

8W-80 CONNECTOR PIN-OUTS

Component	Page
A/C Compressor Clutch (Diesel)	8W-80-4
A/C Compressor Clutch (Gas)	8W-80-4
A/C Heater Control Switch	8W-80-4
A/C High Pressure Switch (Diesel)	8W-80-4
A/C Low Pressure Switch	8W-80-5
A/C Pressure Transducer (2.4L Turbo)	8W-80-5
A/C Pressure Transducer (Except 2.4L Turbo)	8W-80-5
ABS Pump Motor (Connector Side)	8W-80-5
Accelerator Pedal Position Sensor (1.6L/ Diesel)	8W-80-6
Airbag Control Module (ORC) (Base)	8W-80-6
Airbag Control Module C1 (ORC) (Premium)	8W-80-7
Airbag Control Module C2 (ORC) (Premium)	8W-80-8
Ambient Temperature Sensor (Except 2.4L Base)	8W-80-8
Ambient Temperature Sensor (NGC)	8W-80-9
Autostick Switch	8W-80-9
Back-Up Lamp Switch (MTX) (Diesel)	8W-80-9
Back-Up Lamp Switch (MTX) (Gas)	8W-80-9
Battery Temperature Sensor (2.0L/2.4L)	8W-80-10
Battery Temperature Sensor (Diesel)	8W-80-10
Blower Motor	8W-80-10
Blower Motor Resistor Block	8W-80-10
Boost Pressure Sensor (Diesel)	8W-80-11
Brake Lamp Switch (Diesel)	8W-80-11
Brake Lamp Switch (Gas)	8W-80-11
Brake Transmission Shift Interlock Solenoid (EATX)	8W-80-11
Brake Warning Indicator Switch	8W-80-12
C102 (2.0L/2.4L)	8W-80-12
C102 (2.0L/2.4L)	8W-80-12
C103 (2.0L/2.4L Except Turbo)	8W-80-13
C103 (2.0L/2.4L Except Turbo)	8W-80-13
C103 (2.4L Turbo)	8W-80-13
C103 (2.4L Turbo)	8W-80-14
C105	8W-80-14
C105	8W-80-15
C106	8W-80-16
C106	8W-80-17
C107 (Export)	8W-80-17
C107 (Export)	8W-80-18
C108 (Export)	8W-80-18
C108 (Export)	8W-80-18
C109	8W-80-18
C109	8W-80-18
C110	8W-80-19
C110	8W-80-19
C111 (1.6L)	8W-80-19
C111 (1.6L)	8W-80-20
C112 (1.6L)	8W-80-20
C112 (1.6L)	8W-80-20
C114 (1.6L)	8W-80-21
C114 (1.6L)	8W-80-21
C121 (Diesel)	8W-80-21
C121 (Diesel)	8W-80-22
C122 (Diesel)	8W-80-22
C122 (Diesel)	8W-80-22
C124 (Diesel)	8W-80-23
C124 (Diesel)	8W-80-23
C125 (Diesel)	8W-80-23
C125 (Diesel)	8W-80-24
C126 (Diesel)	8W-80-24
C126 (Diesel)	8W-80-24
C127 (Diesel)	8W-80-24
C127 (Diesel)	8W-80-24
C128 (Diesel)	8W-80-25
C128 (Diesel)	8W-80-25
C200	8W-80-25
C200	8W-80-25
C201	8W-80-26
C201	8W-80-26
C202	8W-80-26
C202	8W-80-27
C203	8W-80-27
C203	8W-80-28
C204 (Except Export)	8W-80-28
C204 (Except Export)	8W-80-29
C204 (Export)	8W-80-29
C204 (Export)	8W-80-30
C205 (Except Export)	8W-80-30
C205 (Except Export)	8W-80-31
C205 (Export)	8W-80-31
C205 (Export)	8W-80-32
C206	8W-80-32
C206	8W-80-32
C207	8W-80-33
C207	8W-80-33
C208	8W-80-33
C208	8W-80-33
C209	8W-80-34
C209	8W-80-34
C210 (Heated Seats)	8W-80-34
C210 (Heated Seats)	8W-80-34
C211	8W-80-34
C211	8W-80-35
C300	8W-80-35
C300	8W-80-35
C301	8W-80-35
C301	8W-80-35
C302	8W-80-36
C302	8W-80-36

Component	Page
C303	8W-80-36
C303	8W-80-37
C304	8W-80-37
C304	8W-80-37
C305 (Passenger)	8W-80-37
C305 (Passenger)	8W-80-38
C306 (Driver)	8W-80-38
C306 (Driver)	8W-80-38
C307 (Passenger)	8W-80-38
C307 (Passenger)	8W-80-38
C308 (Driver)	8W-80-39
C308 (Driver)	8W-80-39
Camshaft Position Sensor (Diesel)	8W-80-39
Camshaft Position Sensor (Gas)	8W-80-39
Cargo Lamp	8W-80-40
Center High Mounted Stop Lamp	8W-80-40
Center Stack Lamp	8W-80-40
Cigar Lighter	8W-80-40
Clockspring	8W-80-40
Clutch Pedal Position Switch (Up) (MTX)	8W-80-41
Controller Antilock Brake	8W-80-41
Crankshaft Position Sensor (Diesel)	8W-80-42
Crankshaft Position Sensor (Gas)	8W-80-42
Data Link Connector	8W-80-42
Dome Lamp	8W-80-43
Dome Lamp/Intrusion Sensor (Export)	8W-80-43
Driver Airbag Squib 1	8W-80-43
Driver Door Ajar Switch	8W-80-43
Driver Door Power Lock Motor/Ajar Switch	8W-80-44
Driver Heated Seat Cushion	8W-80-44
Driver Heated Seat Switch	8W-80-44
Driver Seat Airbag Squib	8W-80-44
Driver Seat Belt Switch	8W-80-45
Driver Seat Belt Tensioner	8W-80-45
Driver Side Impact Sensor 1	8W-80-45
EGR Solenoid (Diesel)	8W-80-45
Electronic Throttle Control Module (1.6L)	8W-80-46
Engine Control Module C1 (Diesel)	8W-80-46
Engine Control Module C2 (Diesel)	8W-80-48
Engine Coolant Temperature Sensor (Diesel)	8W-80-49
Engine Coolant Temperature Sensor (Gas)	8W-80-49
Engine Oil Pressure Switch	8W-80-49
Evap/Purge Solenoid (Gas)	8W-80-49
Front Power Window Switch	8W-80-50
Front Washer Pump Motor	8W-80-50
Front Wiper Motor	8W-80-50
Front Wiper/Washer Switch	8W-80-51
Fuel Heater Module (Diesel)	8W-80-51
Fuel Injector No. 1 (Diesel)	8W-80-51
Fuel Injector No. 1 (Gas)	8W-80-51
Fuel Injector No. 2 (Diesel)	8W-80-52
Fuel Injector No. 2 (Gas)	8W-80-52
Fuel Injector No. 3 (Diesel)	8W-80-52
Fuel Injector No. 3 (Gas)	8W-80-52
Fuel Injector No. 4 (Diesel)	8W-80-53
Fuel Injector No. 4 (Gas)	8W-80-53
Fuel Pressure Sensor (Diesel)	8W-80-53
Fuel Pressure Solenoid (Diesel)	8W-80-53
Fuel Pump Module	8W-80-54
Generator (2.4L Turbo)	8W-80-54
Generator (Diesel)	8W-80-54
Generator (Except 2.4L Turbo)	8W-80-54
Headlamp Leveling Switch (Export)	8W-80-55
Heated Seat Module	8W-80-55
High Note Horn	8W-80-55
Hood Ajar Switch (Export)	8W-80-55
Idle Air Control Motor (2.0L/2.4L)	8W-80-56
Ignition Coil (Gas)	8W-80-56
Ignition Switch C1	8W-80-56
Ignition Switch C2 (Autostick)	8W-80-56
Inlet Air Temperature Sensor (Gas)	8W-80-57
Input Speed Sensor	8W-80-57
Instrument Cluster C1	8W-80-57
Instrument Cluster C2	8W-80-58
Intake Air Temperature Sensor (Diesel)	8W-80-58
Knock Sensor (Gas)	8W-80-58
Left Back-Up Lamp	8W-80-58
Left City Lamp (Export)	8W-80-59
Left Cylinder Lock Switch	8W-80-59
Left Door Lock Switch	8W-80-59
Left Fog Lamp	8W-80-59
Left Front Door Speaker	8W-80-59
Left Front Park/Turn Signal Lamp (Except Export)	8W-80-60
Left Front Power Window Motor	8W-80-60
Left Front Side Marker (Export)	8W-80-60
Left Front Turn Signal Lamp (Export)	8W-80-60
Left Front Wheel Speed Sensor	8W-80-61
Left Front Wheel Speed Sensor	8W-80-61
Left Headlamp Leveling Module (Export)	8W-80-61
Left High Beam Headlamp	8W-80-61
Left Instrument Panel Speaker	8W-80-62
Left License Lamp (Export)	8W-80-62
Left Low Beam Headlamp	8W-80-62
Left Power Mirror	8W-80-62
Left Rear Door Power Lock Motor	8W-80-63
Left Rear Fog Lamp (LHD Export)	8W-80-63
Left Rear Power Window Motor	8W-80-63
Left Rear Power Window Switch	8W-80-63
Left Rear Speaker	8W-80-64
Left Rear Turn Signal Lamp	8W-80-64
Left Rear Wheel Speed Sensor	8W-80-64
Left Rear Wheel Speed Sensor	8W-80-64
Left Tail/Stop Lamp	8W-80-64

Component	Page
Left Turn Signal Indicator	8W-80-65
Left Visor/Vanity Lamp (Light Package)	8W-80-65
License Lamp (Except Export)	8W-80-65
Liftgate Ajar Switch	8W-80-65
Liftgate Cylinder Lock Switch	8W-80-65
Liftgate Power Lock Motor	8W-80-66
Low Note Horn	8W-80-66
Manifold Absolute Pressure Sensor (Gas)	8W-80-66
Map/Reading Lamps	8W-80-66
Mass Air Flow Sensor (Diesel)	8W-80-67
Multi-Function Switch	8W-80-67
Natural Vacuum Leak Detection Assembly (Except Export)	8W-80-68
Output Speed Sensor	8W-80-68
Overhead Console Module	8W-80-68
Oxygen Sensor 1/1 Upstream (Gas)	8W-80-68
Oxygen Sensor 1/2 Downstream (Gas)	8W-80-69
Passenger Airbag Squib 1	8W-80-69
Passenger Door Ajar Switch	8W-80-69
Passenger Door Power Lock Motor/Ajar Switch	8W-80-69
Passenger Heated Seat Cushion	8W-80-70
Passenger Heated Seat Switch	8W-80-70
Passenger Seat Airbag Squib	8W-80-70
Passenger Seat Belt Tensioner	8W-80-70
Passenger Side Impact Sensor 1	8W-80-70
Pcv Heater (Diesel)	8W-80-71
Power Mirror Switch (LHD)	8W-80-71
Power Mirror Switch (RHD)	8W-80-71
Power Outlet	8W-80-72
Power Seat Motor	8W-80-72
Power Seat Switch	8W-80-72
Power Steering Pressure Switch (Gas)	8W-80-72
Power Sunroof Module C1	8W-80-72
Power Sunroof Module C2	8W-80-73
Powertrain Control Module (1.6L)	8W-80-73
Powertrain Control Module C1 (NGC)	8W-80-75
Powertrain Control Module C2 (NGC)	8W-80-76
Powertrain Control Module C3 (NGC)	8W-80-77
Powertrain Control Module C4 (NGC) (EATX)	8W-80-78
Radiator Fan Motor (2.4L Turbo)	8W-80-79
Radiator Fan Motor (Except 2.4L Turbo)	8W-80-79
Radio	8W-80-79
Rear Power Outlet	8W-80-80
Rear Window Defogger Switch	8W-80-80
Rear Wiper Motor	8W-80-80
Rear Wiper Switch	8W-80-80
Remote Keyless Entry Antenna (Japan)	8W-80-80
Remote Keyless Entry Module	8W-80-81
Right Back-Up Lamp	8W-80-81
Right City Lamp (Export)	8W-80-82
Right Cylinder Lock Switch (Export)	8W-80-82
Right Door Lock Switch	8W-80-82
Right Fog Lamp	8W-80-82
Right Front Door Speaker	8W-80-83
Right Front Park/Turn Signal Lamp (Except Export)	8W-80-83
Right Front Power Window Motor	8W-80-83
Right Front Side Marker (Export)	8W-80-83
Right Front Turn Signal Lamp (Export)	8W-80-83
Right Front Wheel Speed Sensor	8W-80-84
Right Front Wheel Speed Sensor	8W-80-84
Right Headlamp Leveling Module (Export)	8W-80-84
Right High Beam Headlamp	8W-80-84
Right Instrument Panel Speaker	8W-80-85
Right License Lamp (Export)	8W-80-85
Right Low Beam Headlamp	8W-80-85
Right Power Mirror	8W-80-85
Right Rear Door Power Lock Motor	8W-80-86
Right Rear Fog Lamp (RHD Export)	8W-80-86
Right Rear Power Window Motor	8W-80-86
Right Rear Power Window Switch	8W-80-86
Right Rear Speaker	8W-80-87
Right Rear Turn Signal Lamp	8W-80-87
Right Rear Wheel Speed Sensor	8W-80-87
Right Rear Wheel Speed Sensor	8W-80-87
Right Tail/Stop Lamp	8W-80-87
Right Turn Signal Indicator	8W-80-88
Right Visor/Vanity Lamp (Light Package)	8W-80-88
Sentry Key Immobilizer Module	8W-80-88
Siren (Export)	8W-80-88
Speed Control Servo (2.0L/2.4L)	8W-80-88
Speed Control Switch	8W-80-89
Sunroof Motor	8W-80-89
Surge Solenoid (2.4L Turbo)	8W-80-89
Swirl Solenoid (Diesel)	8W-80-89
Throttle Inlet Pressure Sensor (2.4L Turbo)	8W-80-89
Throttle Inlet Pressure Solenoid (2.4L Turbo)	8W-80-90
Throttle Position Sensor (2.0L/2.4L)	8W-80-90
Traction Control Switch	8W-80-90
Transmission Range Indicator Illumination (Prndl) (Autostick)	8W-80-90
Transmission Range Indicator Illumination (Prndl) (Except Autostick)	8W-80-91
Transmission Range Sensor (2.0L/2.4L)	8W-80-91
Transmission Solenoid/Pressure Switch Assembly (2.0L/2.4L)	8W-80-91
Vehicle Speed Sensor (Diesel)	8W-80-92
Vehicle Speed Sensor (Gas MTX)	8W-80-92
Wastegate Solenoid (2.4L Turbo)	8W-80-92
Wastegate Solenoid (Diesel)	8W-80-92

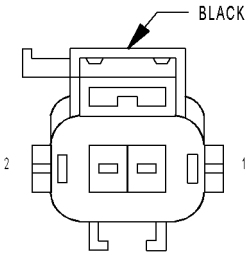

A/C COMPRESSOR CLUTCH (DIESEL)

A/C COMPRESSOR CLUTCH (DIESEL) - BLACK 2 WAY

CAV	CIRCUIT	FUNCTION
1	C3 20DB/BK	A/C COMPRESSOR CLUTCH RELAY OUTPUT
2	Z1 20BK	GROUND

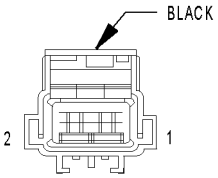

A/C COMPRESSOR CLUTCH (GAS)

A/C COMPRESSOR CLUTCH (GAS) - BLACK 2 WAY

CAV	CIRCUIT	FUNCTION
1	C3 20DB/BK	A/C COMPRESSOR CLUTCH RELAY OUTPUT
2	Z1 20BK	GROUND

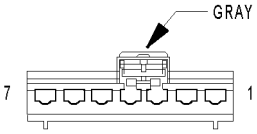

A/C-HEATER CONTROL SWITCH

A/C HEATER CONTROL SWITCH - GRAY 7 WAY

CAV	CIRCUIT	FUNCTION
1	Z8 14BK/VT	GROUND
2	C7 14BK/TN	BLOWER MOTOR HIGH DRIVER
3	C6 18LB	BLOWER MOTOR M2 DRIVER
4	C5 18LG	BLOWER MOTOR M1 DRIVER
5	C4 18TN/BK	BLOWER MOTOR LOW DRIVER
6	C20 20BR	A/C REQUEST SIGNAL
7	E2 20OR	PANEL LAMPS DRIVER

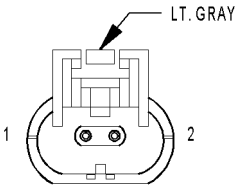

A/C HIGH PRESSURE SWITCH (DIESEL)

A/C HIGH PRESSURE SWITCH (DIESEL) - LT. GRAY 2 WAY

CAV	CIRCUIT	FUNCTION
1	C22 20VT/YL	A/C HIGH PRESSURE SIGNAL
2	C21 20LB/WT	A/C LOW PRESSURE SIGNAL

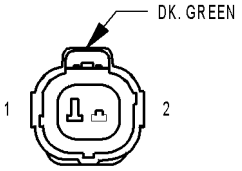

A/C LOW PRESSURE SWITCH

A/C LOW PRESSURE SWITCH - DK. GREEN 2 WAY

CAV	CIRCUIT	FUNCTION
1	C21 20DB/OR (EXCEPT 2.4L TURBO)	A/C LOW PRESSURE SIGNAL
1	C21 20DB/WT (2.4L TURBO)	A/C LOW PRESSURE SIGNAL
2	C20 20BR	A/C REQUEST SIGNAL

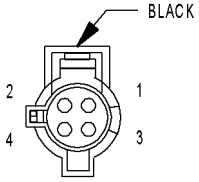

A/C PRESSURE TRANSDUCER (2.4L TURBO)

A/C PRESSURE TRANSDUCER (2.4L TURBO) - BLACK 4 WAY

CAV	CIRCUIT	FUNCTION
1	K4 20BK/LB	SENSOR GROUND 1
2	K7 20OR	5 VOLT SUPPLY
3	C18 20DB	A/C PRESSURE TRANSDUCER SIGNAL
4	-	-

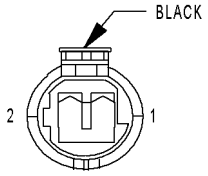

A/C PRESSURE TRANSDUCER (EXCEPT 2.4L TURBO)

A/C PRESSURE TRANSDUCER (EXCEPT 2.4L TURBO) - BLACK 2 WAY

CAV	CIRCUIT	FUNCTION
1	C22 20BR/WT	A/C HIGH PRESSURE SIGNAL
2	C21 20DB/WT (EXCEPT 1.6L)	A/C LOW PRESSURE SIGNAL
2	C21 20DB/OR (1.6L)	A/C LOW PRESSURE SIGNAL

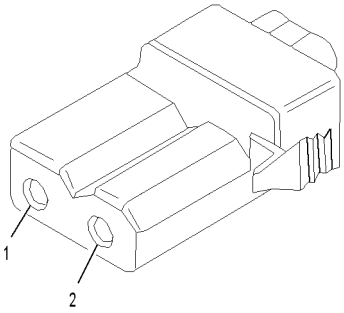

ABS PUMP MOTOR

ABS PUMP MOTOR (CONNECTOR SIDE) - 2 WAY

CAV	CIRCUIT	FUNCTION
1	TN	GROUND
2	RD	PUMP MOTOR RELAY OUTPUT

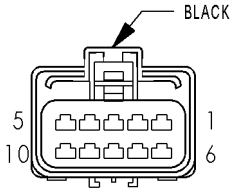

ACCELERATOR PEDAL POSITION SENSOR (1.6L/DIESEL)

ACCELERATOR PEDAL POSITION SENSOR (1.6L/DIESEL) - BLACK 10 WAY

CAV	CIRCUIT	FUNCTION
1	-	-
2	K167 20BR/YL	ACCELERATOR PEDAL POSITION SENSOR NO. 1 GROUND
3	F858 20LG/PK (DIESEL)	ACCELERATOR PEDAL POSITION SENSOR NO. 1 5V SUPPLY
3	F858 20DG/LG (1.6L)	ACCELERATOR PEDAL POSITION SENSOR NO. 1 5V SUPPLY
4	K80 20BK/LG	ACCELERATOR PEDAL POSITION SENSOR NO. 1 SIGNAL
5	F859 20DG/PK (DIESEL)	SENSOR REFERENCE VOLTAGE A
5	F859 20DG/PK (1.6L)	ACCELERATOR PEDAL POSITION SENSOR NO. 2 5V SUPPLY
6	-	-
7	-	-
8	K981 20BR/DG	ACCELERATOR PEDAL POSITION SENSOR NO. 2 GROUND
9	-	-
10	K81 20DB/DG	ACCELERATOR PEDAL POSITION SENSOR NO. 2 SIGNAL

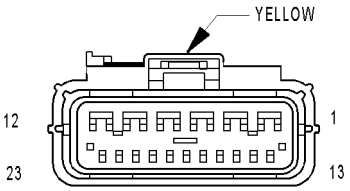

AIRBAG CONTROL MODULE (ORC) (BASE)

AIRBAG CONTROL MODULE (ORC) (BASE) - YELLOW 23 WAY

CAV	CIRCUIT	FUNCTION
1	R56 20LB/DG	PASSENGER SEAT BELT TENSIONER LINE 1
2	R54 20LB/YL	PASSENGER SEAT BELT TENSIONER LINE 2
3	-	-
4	-	-
5	R42 20BK/YL	PASSENGER SQUIB 1 LINE 1
6	R44 20DG/YL	PASSENGER SQUIB 1 LINE 2
7	R55 20LG/DG	DRIVER SEAT BELT TENSIONER LINE 1
8	R53 20LG/YL	DRIVER SEAT BELT TENSIONER LINE 2
9	-	-
10	-	-
11	R43 18BK/LB (EXCEPT SPEED CONTROL)	DRIVER SQUIB 1 LINE 1
11	R43 20BK/LB (SPEED CONTROL)	DRIVER SQUIB 1 LINE 1
12	R45 20DG/LB (SPEED CONTROL)	DRIVER SQUIB 1 LINE 2
12	R45 18DG/LB (EXCEPT SPEED CONTROL)	DRIVER SQUIB 1 LINE 2
13	-	-
14	F15 18DG/WT	FUSED IGNITION SWITCH OUTPUT (RUN-START)
15	F25 18TN/LG	FUSED IGNITION SWITCH OUTPUT (RUN)
16	Z100 20BK/PK	GROUND
17	-	-
18	-	-
19	-	-
20	-	-
21	D25 20VT/YL	PCI BUS
22	-	-
23	-	-

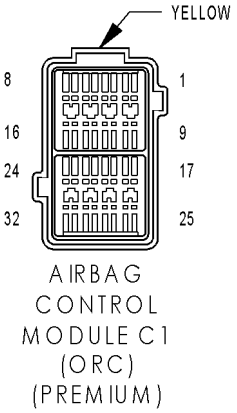

AIRBAG CONTROL MODULE C1 (ORC) (PREMIUM) - YELLOW 32 WAY

CAV	CIRCUIT	FUNCTION
1	R53 20LG/YL	DRIVER SEAT BELT TENSIONER LINE 2
2	R55 20LG/DG	DRIVER SEAT BELT TENSIONER LINE 1
3	R56 20LB/DG	PASSENGER SEAT BELT TENSIONER LINE 1
4	R54 20LB/YL	PASSENGER SEAT BELT TENSIONER LINE 2
5	-	-
6	-	-
7	-	-
8	-	-
9	-	-
10	-	-
11	-	-
12	-	-
13	-	-
14	-	-
15	R131 20LG/YL	DRIVER SIDE IMPACT SENSOR 1 SIGNAL
16	R134 20LB/BR	PASSENGER SIDE IMPACT SENSOR 1 GROUND
17	-	-
18	-	-
19	R133 20LB/DG	DRIVER SIDE IMPACT SENSOR 1 GROUND
20	-	-
21	-	-
22	-	-
23	-	-
24	R132 20LG/VT	PASSENGER SIDE IMPACT SENSOR 1 SIGNAL
25	R33 20LG/WT	DRIVER SEAT SQUIB 1 LINE 2
26	R31 20LG/OR	DRIVER SEAT SQUIB 1 LINE 1
27	R32 20LB/OR	PASSENGER SEAT SQUIB 1 LINE 1
28	R34 20LB/WT	PASSENGER SEAT SQUIB 1 LINE 2
29	-	-
30	-	-
31	-	-
32	-	-

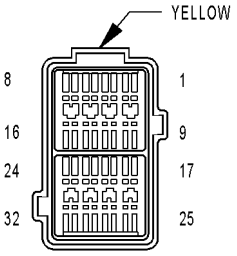

AIRBAG CONTROL MODULE C2 (ORC) (PREMIUM)

AIRBAG CONTROL MODULE C2 (ORC) (PREMIUM) - YELLOW 32 WAY

CAV	CIRCUIT	FUNCTION
1	R45 20DG/LB	DRIVER SQUIB 1 LINE 2
2	R43 20BK/LB	DRIVER SQUIB 1 LINE 1
3	-	-
4	-	-
5	R44 20DG/YL	PASSENGER SQUIB 1 LINE 2
6	R42 20BK/YL	PASSENGER SQUIB 1 LINE 1
7	-	-
8	-	-
9	-	-
10	-	-
11	-	-
12	-	-
13	-	-
14	-	-
15	D25 20VT/YL	PCI BUS
16	F15 18DB/WT (RHD)	FUSED IGNITION SWITCH OUTPUT (RUN-START)
16	F15 18DG/WT (LHD)	FUSED IGNITION SWITCH OUTPUT (RUN-START)
17	-	-
18	-	-
19	-	-
20	-	-
21	-	-
22	Z100 20BK/OR	GROUND
23	-	-
24	F25 18TN/LG	FUSED IGNITION SWITCH OUTPUT (RUN)
25	-	-
26	-	-
27	-	-
28	-	-
29	-	-
30	-	-
31	-	-
32	-	-

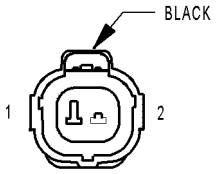

AMBIENT TEMPERATURE SENSOR (EXCEPT 2.4L BASE)

AMBIENT TEMPERATURE SENSOR (EXCEPT 2.4L BASE) - BLACK 2 WAY

CAV	CIRCUIT	FUNCTION
1	G31 20VT/LG	AMBIENT TEMPERATURE SENSOR SIGNAL
2	G32 20BK/LB	SENSOR GROUND

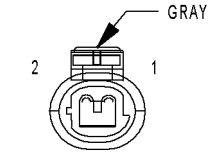

AMBIENT TEMPERATURE SENSOR (NGC)

AMBIENT TEMPERATURE SENSOR (NGC) - GRAY 2 WAY

CAV	CIRCUIT	FUNCTION
1	K145 20BR/OR	AAT SIGNAL
2	K167 20BR/YL	SENSOR GROUND 2

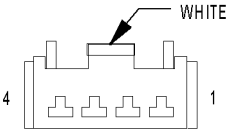

AUTOSTICK SWITCH

AUTOSTICK SWITCH - WHITE 4 WAY

CAV	CIRCUIT	FUNCTION
1	T44 20YL/LB	AUTOSTICK DOWNSHIFT SWITCH SIGNAL
2	T5 20LG/LB	AUTOSTICK UPSHIFT SWITCH SIGNAL
3	Z1 20BK	GROUND
4	F11 20LG/WT	FUSED IGNITION SWITCH OUTPUT (UNLOCK-RUN-START)

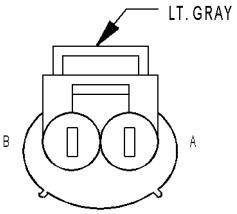

BACK-UP LAMP SWITCH (MTX) (DIESEL)

BACK-UP LAMP SWITCH (MTX) (DIESEL) - LT. GRAY 2 WAY

CAV	CIRCUIT	FUNCTION
A	L1 18VT/BK	BACK-UP LAMP SWITCH OUTPUT
B	F20 18WT	FUSED IGNITION SWITCH OUTPUT (RUN)

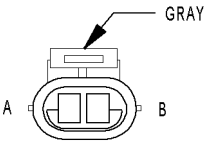

BACK-UP LAMP SWITCH (MTX) (GAS)

BACK-UP LAMP SWITCH (MTX) (GAS) - GRAY 2 WAY

CAV	CIRCUIT	FUNCTION
A	L1 20VT/BK (EXCEPT 1.6L)	BACK-UP LAMP SWITCH OUTPUT
B	F20 20WT (EXCEPT 1.6L)	FUSED IGNITION SWITCH OUTPUT (RUN)
A	L1 18VT/BK (1.6L)	BACK-UP LAMP SWITCH OUTPUT
B	F20 18WT (1.6L)	FUSED IGNITION SWITCH OUTPUT (RUN)

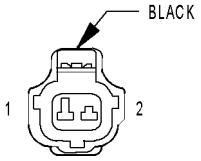

BATTERY TEMPERATURE SENSOR (2.0L/2.4L)

BATTERY TEMPERATURE SENSOR (2.0L/2.4L) - BLACK 2 WAY

CAV	CIRCUIT	FUNCTION
1	K118 20PK/YL	BATTERY TEMP SIGNAL
2	K167 20BR/YL	SENSOR GROUND 2

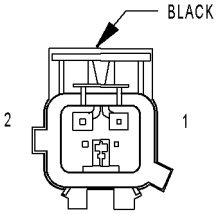

BATTERY TEMPERATURE SENSOR (DIESEL)

BATTERY TEMPERATURE SENSOR (DIESEL) - BLACK 2 WAY

CAV	CIRCUIT	FUNCTION
1	K118 20PK/YL	BATTERY TEMPERATURE SENSOR SIGNAL
2	K4 20BK/LB	SENSOR GROUND

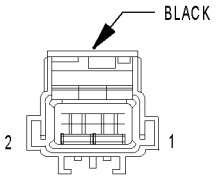

BLOWER MOTOR

BLOWER MOTOR - BLACK 2 WAY

CAV	CIRCUIT	FUNCTION
1	C1 14DG	FUSED IGNITION SWITCH OUTPUT (RUN)
2	C7 14BK/TN	BLOWER MOTOR HIGH DRIVER

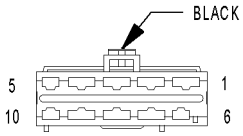

BLOWER MOTOR RESISTOR BLOCK

BLOWER MOTOR RESISTOR BLOCK - BLACK 10 WAY

CAV	CIRCUIT	FUNCTION
1	C5 18LG	BLOWER MOTOR M1 DRIVER
2	-	-
3	-	-
4	-	-
5	C4 18TN/BK	BLOWER MOTOR LOW DRIVER
6	-	-
7	C6 18LB	BLOWER MOTOR M2 DRIVER
8	-	-
9	C7 14BK/TN	BLOWER MOTOR HIGH DRIVER
10	-	-

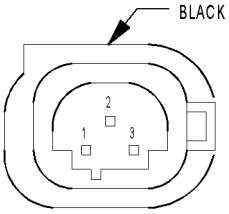

BOOST PRESSURE SENSOR (DIESEL)

BOOST PRESSURE SENSOR (DIESEL) - BLACK 3 WAY

CAV	CIRCUIT	FUNCTION
1	K121 20BR/WT	SENSOR GROUND
2	K1 20BK/YL	BOOST PRESSURE SENSOR SIGNAL
3	K9 20RD/BK	SENSOR REFERENCE VOLTAGE B

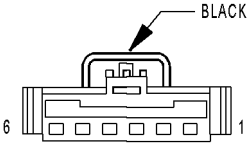

BRAKE LAMP SWITCH (DIESEL)

BRAKE LAMP SWITCH (DIESEL) - BLACK 6 WAY

CAV	CIRCUIT	FUNCTION
1	F32 18PK/DB	FUSED B(+)
2	L50 18WT/TN	PRIMARY BRAKE SWITCH SIGNAL
3	-	-
4	-	-
5	Z1 20BK	GROUND
6	K29 20WT/PK	SECONDARY BRAKE SWITCH SIGNAL
6	K29 20WT/PK	SECONDARY BRAKE SWITCH SIGNAL

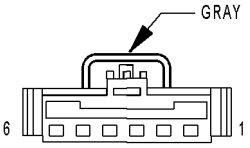

BRAKE LAMP SWITCH (GAS)

BRAKE LAMP SWITCH (GAS) - GRAY 6 WAY

CAV	CIRCUIT	FUNCTION
1	F32 18PK/DB	FUSED B(+)
2	L50 18WT/TN	BRAKE LAMP SWITCH OUTPUT
2	L50 18WT/TN (ABS EXCEPT 1.6L/2.0L RHD EATX)	BRAKE LAMP SWITCH OUTPUT
3	V40 20DB/RD (EXCEPT 1.6L)	SPEED CONTROL BRAKE LAMP SWITCH OUTPUT
4	V32 20YL/RD (EXCEPT 1.6L)	S/C SUPPLY
5	Z1 20BK	GROUND
6	K29 20WT/PK	BRAKE SWITCH SIGNAL
6	K29 20WT/PK	BRAKE SWITCH SIGNAL

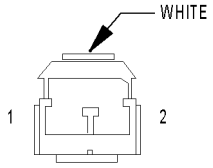

BRAKE TRANSMISSION SHIFT INTERLOCK SOLENOID (EATX)

BRAKE TRANSMISSION SHIFT INTERLOCK SOLENOID (EATX) - WHITE 2 WAY

CAV	CIRCUIT	FUNCTION
1	K29 20WT/PK	BRAKE SWITCH SIGNAL
2	F18 20LG/BK	FUSED IGNITION SWITCH OUTPUT (RUN-START)

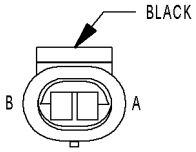

BRAKE WARNING INDICATOR SWITCH

BRAKE WARNING INDICATOR SWITCH - BLACK 2 WAY

CAV	CIRCUIT	FUNCTION
A	G9 20GY/BK	RED BRAKE WARNING INDICATOR DRIVER
B	Z1 20BK	GROUND

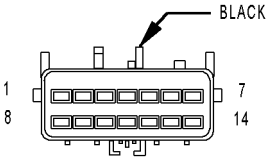

C102 (2.0L/2.4L)

C102 (2.0L/2.4L) - BLACK (ENGINE SIDE)

CAV	CIRCUIT
1	C3 20DB/BK
2	G7 20WT/OR (MTX)
3	G6 20GY
4	A142 16DG/OR
5	T40 14BR
6	C22 20BR/WT (EXCEPT 2.4L TURBO)
6	C18 20DB (2.4L TURBO)
7	Z13 16BK/RD (EATX)
8	C21 20DB/WT (EXCEPT 2.4L TURBO)
9	Z14 16BK/YL (EATX)
10	T15 20LG (EATX)
11	T16 16RD (EATX)
12	Z1 18BK
13	L1 20VT/BK
14	F20 20WT

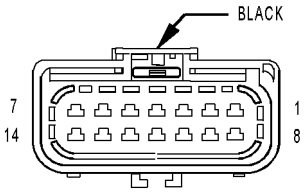

C102 (2.0L/2.4L)

C102 (2.0L/2.4L) - BLACK (HEADLAMP AND DASH SIDE)

CAV	CIRCUIT
1	C3 20DB/BK
2	G7 20WT/OR (MTX)
3	G6 20GY
4	A142 16DG/OR (2.0L RHD/2.4L TURBO)
4	A142 18DG/OR (EXCEPT 2.0L RHD/2.4L TURBO)
5	T40 14BR
6	C22 20DB/WT (EXCEPT 2.4L TURBO)
6	C18 20DB (2.4L TURBO)
7	Z13 16BK/RD (EATX)
8	C21 20DB/OR (EXCEPT 2.4L TURBO)
9	Z14 16BK/YL (EATX)
10	T15 20LG (EATX)
11	T16 16RD (EATX)
12	Z1 16BK (2.0L RHD)
12	Z1 18BK (2.4L TURBO)
12	Z1 20BK (2.0L/2.4L EXCEPT TURBO LHD)
13	L1 18VT/BK (2.0L RHD EATX)
13	L1 20VT/BK (EXCEPT 2.0L RHD EATX)
14	F20 20WT (EXCEPT 2.0L RHD EATX)
14	F20 18WT (2.0L RHD EATX)

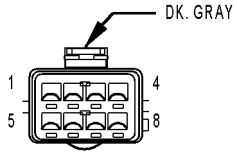

C103
(2.0L/2.4L EXCEPT TURBO)

C103 (2.0L/2.4L EXCEPT TURBO) - DK. GRAY
(ENGINE SIDE)

CAV	CIRCUIT
1	K4 20BK/LB
2	K2 20TN/BK
3	K11 18WT/DB
4	K12 18TN
5	K13 18YL/WT
6	K14 18LB/BR
7	A142 16DG/OR
8	-

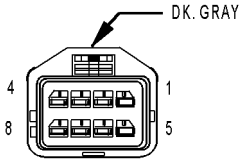

C103
(2.0L/2.4L EXCEPT TURBO)

C103 (2.0L/2.4L EXCEPT TURBO) - DK. GRAY
(INJECTOR HARNESS SIDE)

CAV	CIRCUIT
1	K4 20BK/LB
2	K2 20TN/BK
3	K11 18WT/DB
4	K12 18TN
5	K13 18YL/WT
6	K14 18LB/BR
7	A142 18DG/OR
8	-

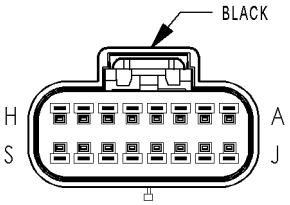

C103
(2.4L TURBO)

C103 (2.4L TURBO) - BLACK (ENGINE SIDE)

CAV	CIRCUIT
A	K1 20DG/RD
B	K4 20BK/LB
C	K11 18WT/DB
D	K12 18TN
E	K13 18YL/WT
F	K14 18LB/BR
G	A142 16DG/OR
H	K17 18DB/TN
J	K19 18BK/GY
K	K20 20DG (MTX)
K	K20 18DG (EATX)
L	K41 20BK/DG
M	K7 20OR
N	K904 20DB/DG
P	K99 18BR/OR
R	-
S	Z1 18BK

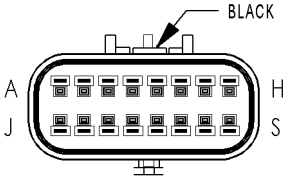

C103
(2.4L TURBO)

C103 (2.4L TURBO) - BLACK (INJECTOR HARNESS SIDE)

CAV	CIRCUIT
A	K1 20DG/RD
B	K4 20BK/LB
C	K11 18WT/DB
D	K12 18TN
E	K13 18YL/WT
F	K14 18LB/BR
G	A142 18DG/OR
H	K17 16DB/TN
J	K19 16BK/GY
K	K20 18DG
L	K41 20BK/DG
M	K7 20OR
N	K904 20DB/DG
P	K99 18BR/OR
R	-
S	Z1 18BK

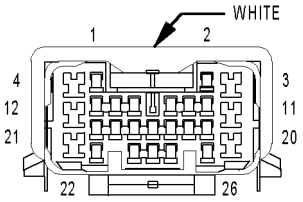

C105

C105 - WHITE (INSTRUMENT PANEL SIDE)

CAV	CIRCUIT
1	B27 18RD/YL (TRACTION CONTROL)
2	L1 20VT/BK
3	A1 14RD
4	C7 14BK/TN
4	C7 14BK/TN
5	K914 20BR/WT
6	A15 18PK/DG
7	X5 20LB/RD (EXPORT)
8	L44 16VT/RD
9	K29 20WT/PK (EATX)
10	L43 16VT
11	A41 14YL
12	L3 16RD/OR
13	C6 18LB
14	F88 16DB
15	V5 18DG
16	G31 20VT/LG (OVERHEAD CONSOLE)
17	G32 20BK/LG (OVERHEAD CONSOLE)
18	D24 20WT/DG
19	C4 18TN/BK
20	F18 20LG/BK
21	M11 16PK/LB
21	M11 16PK/LB
22	V3 16BR/WT
23	V4 16RD/YL
24	L60 18TN (EXPORT)
25	L61 18LG (EXPORT)
26	G70 20BR/TN (EXPORT)

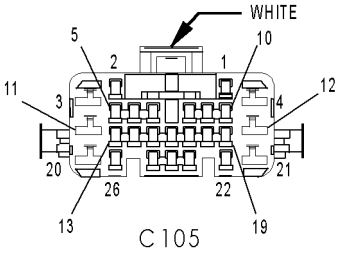

C105 - WHITE (HEADLAMP AND DASH SIDE)

CAV	CIRCUIT
1	B27 18RD/YL (TRACTION CONTROL)
2	L1 20VT/BK (EXCEPT 2.0L RHD EATX)
2	L1 18VT/BK (2.0L RHD EATX)
3	A1 14RD
4	C7 14BK/TN
5	K4 20BK/LB (DIESEL)
5	K167 20BR/YL (EXCEPT1.6L/DIESEL)
6	A15 18PK/DG
7	X5 20LB/RD (SIREN)
8	L44 16VT/RD
9	K29 20WT/PK
10	L43 18VT (LHD)
10	L43 14VT (RHD)
11	A41 14YL
12	L3 16RD/OR
13	C6 18LB
14	F88 16RD/WT (LHD)
14	F88 16DB (RHD)
15	V5 16DG
16	G31 20VT/LG (OVERHEAD CONSOLE)
17	G32 20BK/LB (OVERHEAD CONSOLE)
18	D24 20WT/DG
19	C4 18TN/BK
20	F18 20LG/BK
21	M11 16PK/LB
22	V3 16BR/WT
23	V4 16RD/YL
24	L60 18TN (EXPORT)
25	L61 18LG (EXPORT)
26	G70 20BR/TN (RKE)

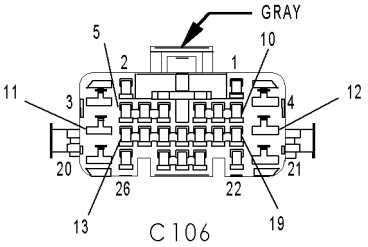

C106 - GRAY (HEADLAMP AND DASH SIDE)

CAV	CIRCUIT
1	L39 18LB (FOG LAMPS)
2	V20 18BK/WT
3	-
4	A3 12RD/WT
5	L160 18TN/RD (EXCEPT EXPORT)
6	C20 20BR
7	L161 18LG/OR (EXCEPT EXPORT)
8	X3 20BK/RD
9	G4 20DB
10	F11 20RD/WT (AUTOSTICK)
11	F1 16DB/BK
12	A35 14DB
13	L50 18WT/TN
14	D25 20VT/YL
15	V37 20RD/LG
16	L13 20BR/YL (HEADLAMP LEVELING)
17	T44 18YL (AUTOSTICK 2.0L RHD/2.4L TURBO)
17	T44 18YL/LB (AUTOSTICK 2.0L LHD/2.4L EXCEPT TURBO)
18	F20 18WT (2.0L RHD EATX)
18	F20 20WT (EXCEPT 2.0L RHD EATX)
19	T5 20LG/LB (AUTOSTICK 2.0L LHD/2.4L EXCEPT TURBO)
19	T5 20LG (AUTOSTICK 2.0L RHD/2.4L TURBO)
20	A4 12BK/PK
21	A2 12BK/PK (DIESEL)
21	A2 12PK/BK (GAS)
22	F12 20DB/WT
23	C5 18LG
24	F39 16PK/LG (EXPORT)
25	V10 18BR
26	L7 18BK/YL

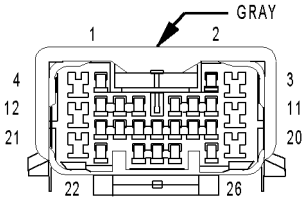

C106

C106 - GRAY (INSTRUMENT PANEL SIDE)

CAV	CIRCUIT
1	L39 18LB (FOG LAMPS)
2	V20 18BK/WT
3	-
4	A3 12RD/WT
5	L160 18TN/RD (EXCEPT EXPORT)
6	C20 20BR
7	L161 18LG/OR (EXCEPT EXPORT)
8	X3 20BK/RD
9	G4 20DB
10	F11 20RD/WT (AUTOSTICK)
11	F1 16DB/BK
12	A35 14DB (POWER SEATS)
12	A35 14DB (HEATED SEATS)
13	L50 18WT/TN
14	D25 20VT/YL
15	V37 20RD/LG
16	L13 20BR/YL (HEADLAMP LEVELING)
17	T44 20YL/LB (AUTOSTICK)
18	F20 20WT
19	T5 20LG/LB (AUTOSTICK)
20	A4 12BK/PK
21	A2 12PK/BK
22	F12 20DB/WT
23	C5 18LG
24	F39 18PK/LG (FOG LAMPS)
25	V10 18BR
26	L7 18BK/YL

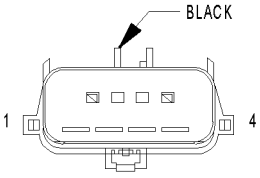

C107
(EXPORT)

C107 (EXPORT) - BLACK (HEADLAMP AND DASH SIDE)

CAV	CIRCUIT
1	L7 18BK/YL
2	Z1 18BK
3	L13 20BR/YL
4	L43 18VT

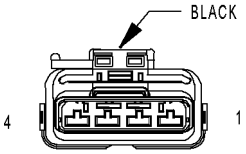

C107
(EXPORT)

C107 (EXPORT) - BLACK (HEADLAMP LEVELING SIDE)

CAV	CIRCUIT
1	L7 18BK
2	Z1 18BR
3	L13 18OR
4	L43 18YL

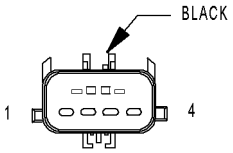

C108
(EXPORT)

C108 (EXPORT) - BLACK (HEADLAMP AND DASH SIDE)

CAV	CIRCUIT
1	L7 18BK/YL
2	Z1 18BK
3	L13 20BR/YL
4	L43 18VT

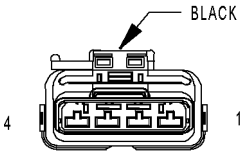

C108
(EXPORT)

C108 (EXPORT) - BLACK (HEADLAMP LEVELING SIDE)

CAV	CIRCUIT
1	L7 18BK
2	Z1 18BR
3	L13 18OR
4	L43 18YL

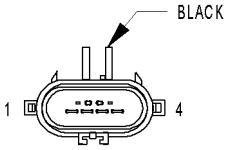

C109

C109 - BLACK (HEADLAMP AND DASH SIDE)

CAV	CIRCUIT
1	B1 18YL/DB
2	B2 18YL
3	B3 18LG/DB
4	B4 18LG

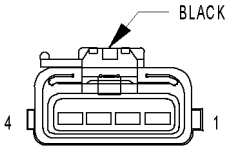

C109

C109 - BLACK (UNDERBODY SIDE)

CAV	CIRCUIT
1	B1 20YL/DB
2	B2 20YL
3	B3 20LG/DB
4	B4 20LG

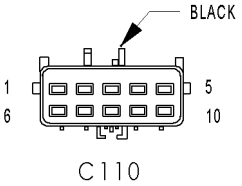

C110 - BLACK (HEADLAMP AND DASH SIDE)

CAV	CIRCUIT
1	G4 20DB
2	Z2 20BK/LG
3	A141 16DG/WT
4	Z1 16BK
5	K106 18WT/DG (LEAK DETECTION PUMP)
6	K107 18OR/YL (LEAK DETECTION PUMP)
7	-
8	-
9	-
10	-

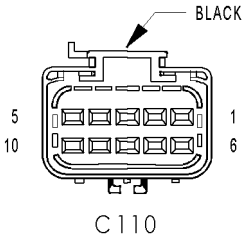

C110 - BLACK (UNDERBODY SIDE)

CAV	CIRCUIT
1	G4 20DB
2	Z2 20BK/LG
3	A141 16DG/WT
4	Z1 16BK
5	K106 20WT/DG (LEAK DETECTION PUMP)
6	K107 20OR/YL (LEAK DETECTION PUMP)
7	-
8	-
9	-
10	-

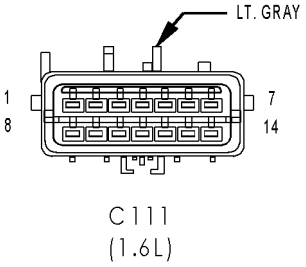

C111 (1.6L) - LT. GRAY (ENGINE SIDE)

CAV	CIRCUIT
1	-
2	F12 20DB/WT
3	C3 20DB/BK
4	T40 14BR
5	A142 18DG/OR
6	K90 20TN
7	-
8	C21 20DB/OR
9	F20 18WT
10	L1 18VT/BK
11	L50 18WT/TN
12	A14 18GY/WT
13	-
14	-

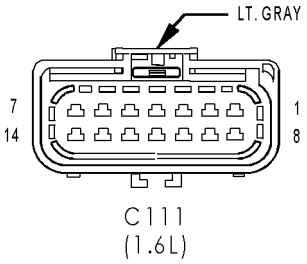

C111 (1.6L) - LT. GRAY (HEADLAMP AND DASH SIDE)

CAV	CIRCUIT
1	-
2	F12 20DB/WT
3	C3 20DB/BK
4	T40 14BR
5	A142 16DG/OR
6	K90 20TN
7	-
8	C21 20DB/OR
9	F20 20WT
10	L1 20VT/BK
11	L50 20WT/TN
12	A14 16RD/WT
13	-
14	-

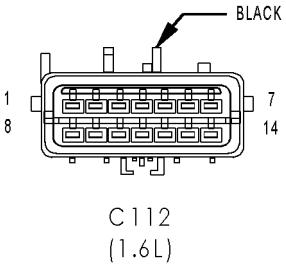

C112 (1.6L) - BLACK (ENGINE SIDE)

CAV	CIRCUIT
1	V37 20RD/LG
2	G9 20GY/BK
3	K29 20WT/PK
4	K10 20DB/OR
5	K52 20PK/BK
6	K119 18LG/BK
7	T141 20YL/RD
8	C27 20DB/PK
9	C28 20DB/OR
10	K51 20DB/YL
11	K31 20BR
12	D25 20VT/YL
13	D20 20LG
14	D21 20PK

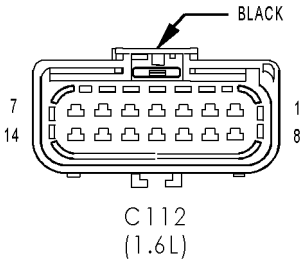

C112 (1.6L) - BLACK (HEADLAMP AND DASH SIDE)

CAV	CIRCUIT
1	-
2	G9 20GY/BK
3	K29 20WT/PK
4	K10 20DB/OR
5	K52 20PK/BK
6	K119 20LG/BK
7	T141 20YL/RD
8	C27 20DB/PK
9	C28 20DB/OR
10	K51 20DB/YL
11	K31 20BR
12	D25 20VT/YL
13	D20 20LG
14	D21 20PK

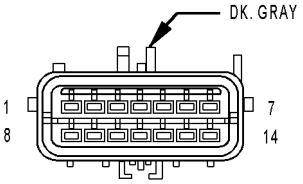

C114
(1.6L)

C114 (1.6L) - DK. GRAY (ENGINE SIDE)

CAV	CIRCUIT
1	K80 20BK/LG
2	F858 20DG/LG
3	K167 20BR/YL
4	K81 20DB/DG
5	F859 20DG/PK
6	K981 20BR/DG
7	Z1 20BK
8	C24 20YL/RD
9	-
10	-
11	-
12	-
13	-
14	-

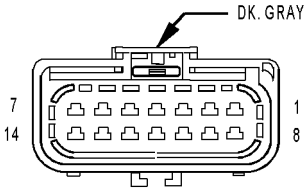

C114
(1.6L)

C114 (1.6L) - DK. GRAY (HEADLAMP AND DASH SIDE)

CAV	CIRCUIT
1	K80 20BK/LG
2	F858 20DG/LG
3	K167 20BR/YL
4	K81 20DB/DG
5	F859 20DG/PK
6	K981 20BR/DG
7	Z1 20BK
8	C24 20YL/RD
9	-
10	-
11	-
12	-
13	-
14	-

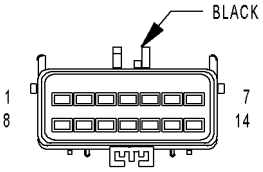

C121
(DIESEL)

C121 (DIESEL) - BLACK (ENGINE SIDE)

CAV	CIRCUIT
1	-
2	K31 20BR/LB
3	-
4	A14 18RD/LB
5	K137 20LB/GY
6	K47 20LB
7	K118 20RD/YL
8	K90 20YL/BK
9	F12 20LB/WT
10	K4 20BK/LB
11	Z12 12BK/LG
12	K981 20LG/BR
13	Z11 20WT/BK
14	A41 18YL

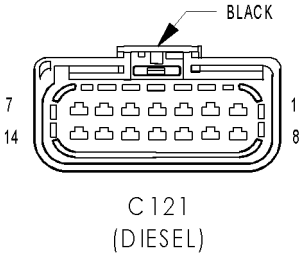

C121 (DIESEL) - BLACK (HEADLAMP & DASH SIDE)

CAV	CIRCUIT
1	-
2	K31 20BR
3	-
4	A14 16RD/WT
5	K137 20DB/GY
6	K47 20DB/YL
7	K118 20PK/YL
8	K90 20TN
9	F12 20DB/WT
10	K4 20BK/LB
11	Z12 14BK/TN
12	K981 20BR/DG
13	Z12 20BK/TN
14	A41 14YL

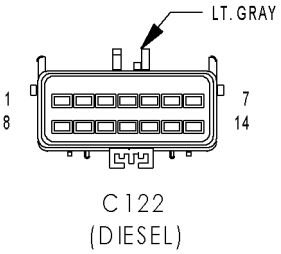

C122 (DIESEL) - LT. GRAY (ENGINE SIDE)

CAV	CIRCUIT
1	C28 20LB/RD
2	K119 20LG/BK
3	G9 20GY/BK
4	T141 20YL/RD
5	K35 20GY/YL
6	V37 20RD/LG
7	A142 12RD/LG
8	K51 20LB/YL
9	C3 20DB/BK
10	Z1 20BK
11	C21 20LB/WT
12	T40 12VT
13	L1 18VT/BK
14	F20 18WT

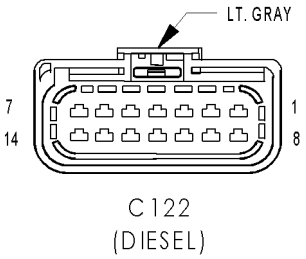

C122 (DIESEL) - LT. GRAY (HEADLAMP & DASH)

CAV	CIRCUIT
1	C28 20DB/OR
2	K119 20LG/BK
3	G9 20GY/BK
4	T141 20YL/RD
5	K35 20GY/YL
6	V37 20RD/LG
7	A142 16DG/OR (RHD)
7	A142 14DG/OR (LHD)
8	K51 20DB/YL
9	C3 20DB/BK
10	Z1 16BK (RHD)
10	Z1 20BK (LHD)
11	C21 20DB/OR
12	T40 14BR
13	L1 20VT/BK
14	F20 20WT

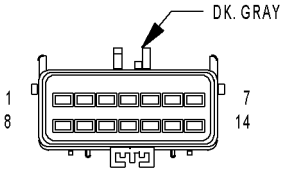

C124
(DIESEL)

C124 (DIESEL) - DK. GRAY (ENGINE SIDE)

CAV	CIRCUIT
1	D21 20RD
2	D25 20VT/YL
3	K81 20LB/LG
4	K167 20BR/YL
5	F859 20LG/PK
6	K80 20BK/LG
7	F858 20LG/VT
8	C27 20LB/BK
9	C24 20LB/PK
10	C41 20LG/LB
11	C42 20GY/LB
12	K152 20WT
13	L50 18WT/LB
14	K29 20WT/RD

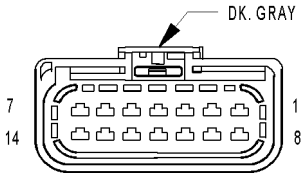

C124
(DIESEL)

C124 (DIESEL) - DK. GRAY (HEADLAMP & DASH SIDE)

CAV	CIRCUIT
1	D21 20PK
2	D25 20VT/YL
3	K81 20DB/DG
4	K167 20BR/YL
5	F859 20DG/PK
6	K80 20BK/LG
7	F858 20LG/PK
8	C27 20DB/PK
9	C24 20YL/RD
10	C41 20LB/DG
11	C42 20LB/GY
12	K152 20WT
13	L50 18WT/TN
14	K29 20WT/PK

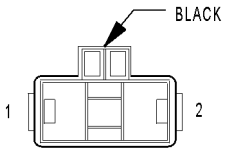

C125
(DIESEL)

C125 (DIESEL) - BLACK (HEADLAMP & DASH SIDE)

CAV	CIRCUIT
1	K154 10GY
2	K154 10GY

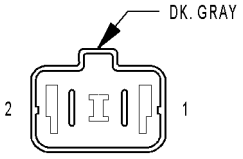

C125
(DIESEL)

C125 (DIESEL) - DK. GRAY (ENGINE SIDE)

CAV	CIRCUIT
1	K154 10BK/LG
2	K154 10BK/RD

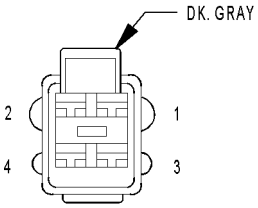

C126
(DIESEL)

C126 (DIESEL) - DK. GRAY (CABIN HEATER SIDE)

CAV	CIRCUIT
1	K132 12VT
2	K232 10YL
3	K232 10YL
4	-

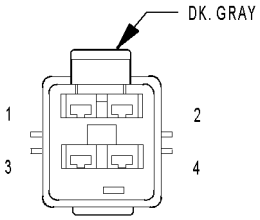

C126
(DIESEL)

C126 (DIESEL) - DK. GRAY (HEADLAMP & DASH SIDE)

CAV	CIRCUIT
1	K132 12VT
2	K232 10YL
3	K232 10YL
4	-

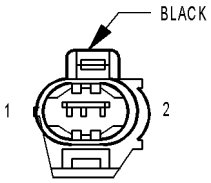

C127
(DIESEL)

C127 (DIESEL) - BLACK (BATTERY SIDE)

CAV	CIRCUIT
1	K118 20PK/YL
2	K4 20BK/LB

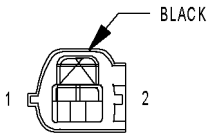

C127
(DIESEL)

C127 (DIESEL) - BLACK (HEADLAMP & DASH SIDE)

CAV	CIRCUIT
1	K118 20PK/YL
2	K4 20BK/LB

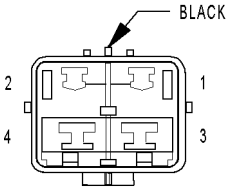

C128
(DIESEL)

C128 (DIESEL) - BLACK (HEADLAMP & DASH SIDE)

CAV	CIRCUIT
1	-
2	A193 14RD/DB
3	A54 10RD
4	A222 10RD/LB

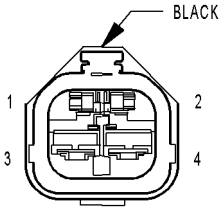

C128
(DIESEL)

C128 (DIESEL) - BLACK (JUNCTION POST SIDE)

CAV	CIRCUIT
1	-
2	A193 14RD
3	A54 10RD
4	A222 10RD/LB

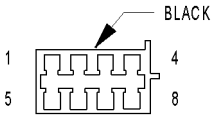

C200

C200 - BLACK (INSTRUMENT PANEL SIDE)

CAV	CIRCUIT
1	E2 20OR (OVERHEAD CONSOLE)
2	F10 18YL/RD (OVERHEAD CONSOLE)
2	X12 20RD/WT (OVERHEAD CONSOLE)
3	G31 20VT/LG (OVERHEAD CONSOLE)
4	G32 20BK/LG (OVERHEAD CONSOLE)
5	-
6	-
7	X53 18DG/VT
8	X55 18BR/DB

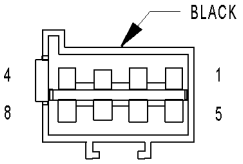

C200

C200 - BLACK (LT/RT HEADLINER JUMPER SIDE)

CAV	CIRCUIT
1	E2 20PK
2	F10 18YL
2	X12 20YL
3	G31 18BK
4	G32 20BK/LG
5	-
6	-
7	X53 18VT
8	X55 18DB/RD

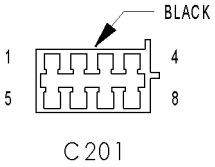

C201 - BLACK (INSTRUMENT PANEL SIDE)

CAV	CIRCUIT
1	M1 18PK
2	M2 20YL
2	M2 20YL
3	Z1 18BK
4	Z2 20BK/LG (OVERHEAD CONSOLE)
5	G120 20WT/LB (RKE EXPORT)
6	-
7	X54 18VT
8	X56 18DB/RD

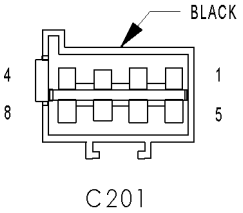

C201 - BLACK (LT/RT HEADLINER JUMPER SIDE)

CAV	CIRCUIT
1	M1 20PK
2	M2 18YL
3	Z1 18BK
4	Z2 20BK/LG
5	G120 20WT/LB
6	-
7	X54 18VT/DG
8	X56 18DB/RD

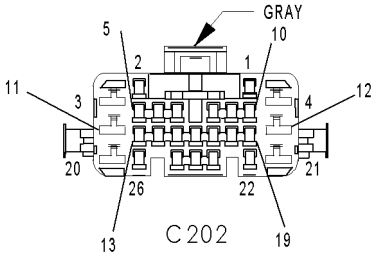

C202 - GRAY (INSTRUMENT PANEL SIDE)

CAV	CIRCUIT
1	G10 20LG/RD (LHD)
2	G77 20TN/OR
3	C15 12BK/WT
4	L1 20VT/BK (MTX)
4	L1 20VT/BK
5	L50 18WT/TN
6	X51 18BR/YL
7	X57 18BR/LB
8	-
9	R55 20LG/DG (BASE ORC)
10	L38 18BR/WT (REAR FOG LAMP)
11	L63 18DG/RD
11	L63 18DG/RD (HEADLAMP LEVELING)
12	G78 20TN/BK (PREMIUM ALARM)
12	G78 20TN/BK
13	A120 16RD/LG (POWER SEAT)
14	V13 18BR/LG
15	P96 20DG (RKE)
16	R53 20LG/YL (BASE ORC)
17	-
18	-
19	V23 18BR/PK
20	Q17 14DB/WT
21	Q27 14RD/BK
22	L7 18BK/YL
23	-
24	-
25	-
26	-

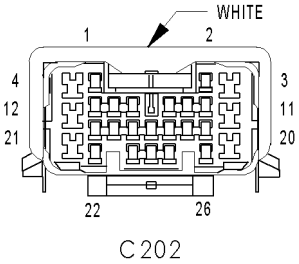

C202 - WHITE (LEFT BODY SIDE)

CAV	CIRCUIT
1	G10 20LG/RD (LHD)
2	G77 20TN/OR
3	C15 12BK/WT
4	L1 18VT/BK
5	L50 18WT/TN
6	X51 18BR/YL
7	X57 18BR/LB
8	-
9	R55 20LG/DG (BASE ORC)
10	L38 18BR/WT (REAR FOG LAMP)
11	L63 18DG/RD
12	G78 20TN/BK
13	A120 16RD/LG (LHD POWER SEAT)
14	V13 18BR/LG
15	P96 20WT/LG (RKE)
16	R53 20LG/YL (BASE ORC)
17	-
18	-
19	V23 18BR/PK
20	Q17 14DB/WT
21	Q27 14RD/BK
22	L7 18BK/YL
23	-
24	-
25	-
26	-

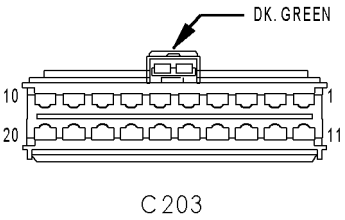

C203 - DK. GREEN (INSTRUMENT PANEL SIDE)

CAV	CIRCUIT
1	Q1 14YL
2	G76 20TN/YL
3	A120 16RD/LG (RHD POWER SEAT)
4	X52 18DB/WT
5	X58 18DB/BK
6	P35 18OR/BK (POWER LOCKS)
6	P35 18OR/BK (POWER LOCKS)
7	P36 18PK/BK (POWER LOCKS)
7	P36 18PK/BK (POWER LOCKS)
8	F98 18RD/WT (HEATED SEATS)
9	R56 20LB/DG (BASE ORC)
10	G10 20LG/RD (RHD)
11	L62 18BR/RD
11	L62 18BR/RD (HEADLAMP LEVELING)
12	F30 16RD (REAR POWER OUTLET)
13	M1 20PK
14	M2 20YL
15	R54 20LB/YL (BASE ORC)
16	-
17	Q28 14DG/WT
18	-
19	Q18 14GY/BK
20	G11 20WT/BK

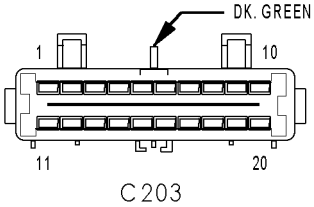

C203 - DK. GREEN (RIGHT BODY SIDE)

CAV	CIRCUIT
1	Q1 14YL
2	G76 20TN/YL
3	A120 16RD/LG (RHD POWER SEAT)
4	X52 18DB/WT
5	X58 18DB/BK
6	P35 18OR/BK (POWER LOCKS)
7	P36 18PK/BK (POWER LOCKS)
8	F98 18RD/WT (HEATED SEATS)
9	R56 20LB/DG (BASE ORC)
10	G10 20LG/RD (RHD)
11	L62 18BR/RD
12	F30 16RD (REAR POWER OUTLET)
13	M1 20PK
14	M2 20YL
15	R54 20LB/DG (BASE ORC)
16	-
17	Q28 14DG/WT
18	-
19	Q18 14GY/BK
20	G11 20 WT/BK

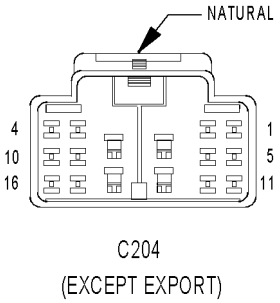

C204 (EXCEPT EXPORT) - NATURAL
(INSTRUMENT PANEL SIDE)

CAV	CIRCUIT
1	C16 20LB/YL (HEATED MIRRORS)
2	Q11 14LB
3	G75 20TN/DB
4	P75 20DB/WT (POWER MIRRORS)
5	L7 18BK/YL (POWER LOCKS)
6	-
7	X53 18DG/VT
7	X53 18DG
8	P73 20YL/PK
9	Z1 20BK
10	Q21 14WT
11	-
12	P34 18PK/BK (DRIVER POWER LOCKS)
13	P97 20 WT/DG (POWER LOCKS)
14	X55 18BR/DB
14	X55 18BR/DB
15	P33 18OR/BK (DRIVER POWER LOCKS)
16	P71 20YL/BK (POWER MIRRORS)

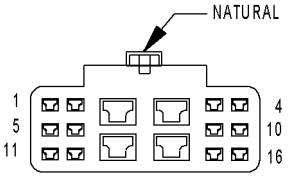

C204
(EXCEPT EXPORT)

C204 (EXCEPT EXPORT) - NATURAL (LEFT FRONT DOOR SIDE)

CAV	CIRCUIT
1	C16 20LB/YL (HEATED MIRRORS)
2	Q11 14LB
3	G75 20TN/DB
4	P75 20DB/WT (POWER MIRRORS)
5	L7 18BK/YL (POWER LOCKS)
6	-
7	X53 18DG
8	P73 20YL/PK (POWER MIRRORS)
9	Z1 20BK
10	Q21 14WT
11	-
12	P34 18PK/BK (DRIVER POWER LOCKS)
13	P97 20WT/DG (POWER LOCKS)
14	X55 18BR/DB
15	P33 18OR/BK (DRIVER POWER LOCKS)
16	P71 20YL/BK (POWER MIRRORS)

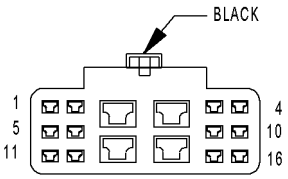

C204
(EXPORT)

C204 (EXPORT) - BLACK (INSTRUMENT PANEL SIDE)

CAV	CIRCUIT
1	C16 20LB/YL (HEATED MIRRORS)
2	Q11 14LB
3	G75 20TN
4	P75 20DB/WT (POWER MIRRORS)
5	L7 18BK/YL (POWER LOCKS)
6	P159 20DG/WT (POWER FOLDING MIRRORS)
7	X53 18DG/VT
7	X53 18DG
8	P73 20YL/PK (LHD POWER MIRRORS)
8	P76 20YL/PK (RHD POWER MIRRORS)
9	Z1 20BK
10	Q21 14WT
11	P160 20LB/BK (POWER FOLDING MIRRORS)
12	P34 18DB (LHD DRIVER POWER LOCKS)
12	P36 18DB/WT (RHD PASSENGER POWER LOCKS)
13	P97 20WT/DG (POWER LOCKS)
14	X55 18BR/DB
14	X55 18BR/DB
15	P35 18OR/BK (RHD PASSENGER POWER LOCKS)
15	P33 18OR/BK (LHD DRIVER POWER LOCKS)
16	P71 20YL/BK (POWER MIRRORS)

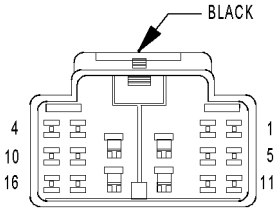

C204
(EXPORT)

C204 (EXPORT) - BLACK (LEFT FRONT DOOR SIDE)

CAV	CIRCUIT
1	C16 20LB/YL (HEATED MIRRORS)
2	Q11 14LB
3	G75 20TN/DB
4	P75 20DB/WT (POWER MIRRORS)
5	L7 18BK/YL (POWER LOCKS)
6	P159 20DG/WT (POWER FOLDING MIRRORS)
7	X53 18DG/VT
8	P73 20YL/PK (LHD POWER MIRRORS)
8	P76 20YL/PK (RHD POWER MIRRORS)
9	Z1 20BK
10	Q21 14WT
11	P160 20LB/BK (POWER FOLDING MIRRORS)
12	P36 18PK/BK (RHD PASSENGER POWER LOCKS)
12	P34 18PK/BK (LHD DRIVER POWER LOCKS)
13	P97 20WT/DG (POWER LOCKS)
14	X55 18BR/DB
15	P33 18OR/BK (LHD DRIVER POWER LOCKS)
15	P35 18OR/BK (RHD PASSENGER POWER LOCKS)
16	P71 20YL (LHD POWER MIRRORS)
16	P71 20BR/YL (RHD POWER MIRRORS)

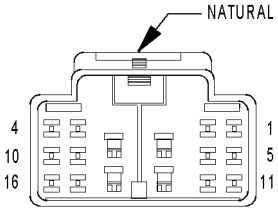

C205
(EXCEPT EXPORT)

C205 (EXCEPT EXPORT) - NATURAL (INSTRUMENT PANEL SIDE)

CAV	CIRCUIT
1	C16 20LB/YL (HEATED MIRRORS)
2	Q12 14BR/LB
3	G74 20TN/RD
4	P74 20DB/WT (POWER MIRRORS)
5	L7 18BK/YL (POWER LOCKS)
6	-
7	X54 18VT
7	X54 18VT
8	P70 20PK (POWER MIRRORS)
9	Z1 20BK
10	Q22 14VT/WT
11	-
12	P36 18PK/BK (PASSENGER POWER LOCKS)
13	P96 20DG (POWER LOCKS)
14	X56 18DB/RD
14	X56 18DB/RD
15	P35 18OR/BK (PASSENGER POWER LOCKS)
16	P72 20YL (POWER MIRRORS)

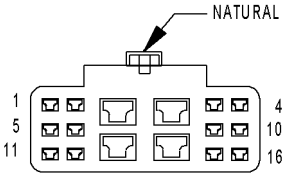

C205
(EXCEPT EXPORT)

C205 (EXCEPT EXPORT) - NATURAL (RIGHT FRONT DOOR SIDE)

CAV	CIRCUIT
1	C16 20LB/YL (HEATED MIRRORS)
2	Q12 14LB
3	G74 20TN/DB
4	P74 20DB/WT (POWER MIRRORS)
5	L7 18BK/YL (POWER LOCKS)
6	-
7	X54 18VT
8	P70 20YL/PK (POWER MIRRORS)
9	Z1 20BK
10	Q22 14WT
11	-
12	P36 18PK/BK (PASSENGER POWER LOCKS)
13	P96 20WT/DG (POWER LOCKS)
14	X56 18DB/RD
15	P35 18OR/BK (PASSENGER POWER LOCKS)
16	P72 20YL/BK (POWER MIRRORS)

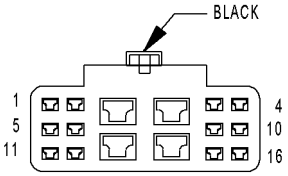

C205
(EXPORT)

C205 (EXPORT) - BLACK (INSTRUMENT PANEL SIDE)

CAV	CIRCUIT
1	C16 20LB/YL (HEATED MIRRORS)
2	Q12 14BR/LB
3	G74 20TN/RD
4	P74 20DB/WT (POWER MIRRORS)
5	L7 18BK/YL (POWER LOCKS)
6	P159 20DG/WT (POWER FOLDING MIRRORS)
7	X54 18VT
7	X54 18VT
8	P76 20YL/PK (RHD POWER MIRRORS)
8	P70 20WT (LHD POWER MIRRORS)
9	Z1 20BK
10	Q22 14VT/WT
11	P160 20LB/BK (POWER FOLDING MIRRORS)
12	P34 18PK/BK (RHD DRIVER POWER LOCKS)
12	P36 18PK/VT (LHD PASSENGER POWER LOCKS)
13	P96 20WT/LG (POWER LOCKS)
14	X56 18DB/RD
14	X56 18DB/RD
15	P35 18OR/VT (LHD PASSENGER POWER LOCKS)
15	P33 18OR/BK (RHD DRIVER POWER LOCKS)
16	P72 20YL (POWER MIRRORS)

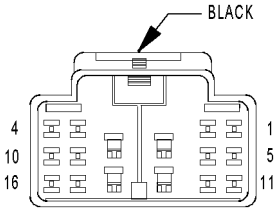

C205
(EXPORT)

C205 (EXPORT) - BLACK (RIGHT FRONT DOOR SIDE)

CAV	CIRCUIT
1	C16 20LB/YL (HEATED MIRRORS)
2	Q12 14BR
3	G74 20TN/RD
4	P74 20DB (POWER MIRRORS)
5	L7 18BK/YL (POWER LOCKS)
6	P159 20DG/WT (POWER FOLDING MIRRORS)
7	X54 18VT
8	P70 20WT (LHD POWER MIRRORS)
8	P76 20YL/PK (RHD POWER MIRRORS)
9	Z1 20BK
10	Q22 14VT
11	P160 20LB/BK (POWER FOLDING MIRRORS)
12	P36 18PK/VT (LHD PASSENGER POWER LOCKS)
12	P34 18PK/BK (RHD DRIVER POWER LOCKS)
13	P96 20WT/LG (POWER LOCKS)
14	X56 18DB/RD
15	P33 18OR/BK (RHD DRIVER POWER LOCKS)
15	P35 18OR/VT (LHD PASSENGER POWER LOCKS)
16	P72 20YL/BK (POWER MIRRORS)

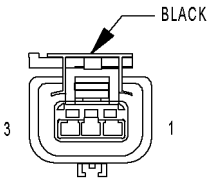

C206

C206 - BLACK (INSTRUMENT PANEL SIDE)

CAV	CIRCUIT
1	A120 16RD/LG (POWER SEAT)
2	Z121 16BK
3	F99 18RD/WT (HEATED SEATS)

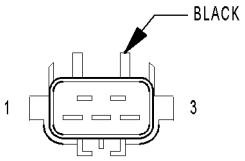

C206

C206 - BLACK (POWER HEIGHT ADJUSTER SIDE)

CAV	CIRCUIT
1	A120 16RD/LG (POWER SEAT)
2	Z1 16BK (EXCEPT HEATED SEATS)
2	Z121 18BK (HEATED SEATS)
3	F99 18RD/WT (HEATED SEATS)

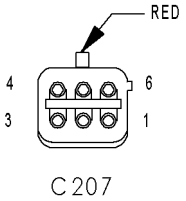

C207 - RED (DOME LAMP SIDE)

CAV	CIRCUIT
1	M1 20PK
2	M2 20YL
3	Z1 20BK (EXCEPT POWER SUNROOF)
3	Z1 18BK (POWER SUNROOF)
4	Z2 20BK/LG (OVERHEAD CONSOLE)
5	G120 20WT/LB (RKE EXPORT)
6	-

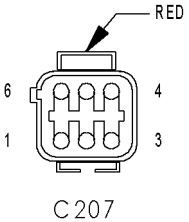

C207 - RED (LT/RT HEADLINER JUMPER SIDE)

CAV	CIRCUIT
1	M1 20PK
2	M2 18YL
3	Z1 18BK
4	Z2 20BK/LG
5	G120 20WT/LB
6	-

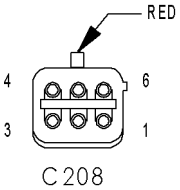

C208 - RED (DOME LAMP SIDE)

CAV	CIRCUIT
1	E2 20OR
2	F10 18YL/RD (EXCEPT MAP/READING LAMPS)
2	F10 20BK/YL (MAP/READING LAMPS)
3	G31 20VT/LG
4	G32 20BK/LB
5	-
6	-

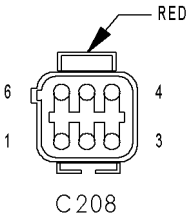

C208 - RED (LT HEADLINER JUMPER SIDE)

CAV	CIRCUIT
1	E2 20PK
2	F10 18YL
3	G31 18BK
4	G32 20BK/LG
5	-
6	-

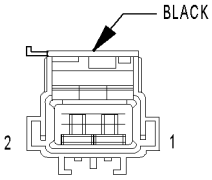

C209

C209 - BLACK (INSTRUMENT PANEL SIDE)

CAV	CIRCUIT
1	C1 14DG
2	C7 14BK/TN

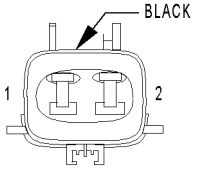

C209

C209 - BLACK (HEATER JUMPER SIDE)

CAV	CIRCUIT
1	C1 14DG
2	C7 14BK/TN

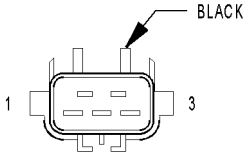

C210
(HEATED SEATS)

C210 (HEATED SEATS) - BLACK (HEATED SEAT SIDE)

CAV	CIRCUIT
1	-
2	Z122 18BK
3	F98 18RD/WT

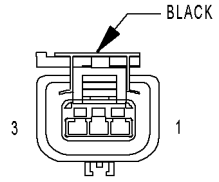

C210
(HEATED SEATS)

C210 (HEATED SEATS) - BLACK (INSTRUMENT PANEL SIDE)

CAV	CIRCUIT
1	-
2	Z122 16BK
3	F98 18RD/WT

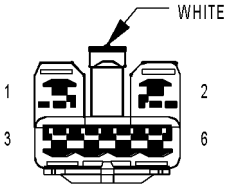

C211

C211 - WHITE (DOME LAMP SIDE)

CAV	CIRCUIT
1	Q43 20VT
2	Q44 20BR
3	Q42 20LB
4	Q41 20WT
5	Z1 18BK
6	F10 18YL/RD

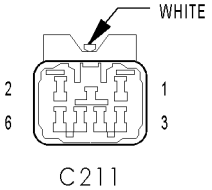

C211 - WHITE (POWER SUNROOF SIDE)

CAV	CIRCUIT
1	L1 20VT
2	L2 20BR
3	L3 20LB
4	L4 20WT
5	Z1 14BK/VT
6	L5 14YL/RD

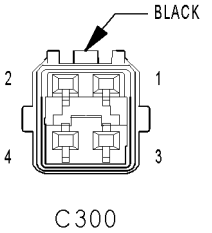

C300 - BLACK (LEFT REAR DOOR SIDE)

CAV	CIRCUIT
1	P35 18OR/VT (POWER LOCKS)
2	P36 18PK/VT (POWER LOCKS)
3	Q13 14DB/GY (POWER LOCKS)
3	Q13 14DB (EXCEPT POWER LOCKS)
4	Q23 14RD/WT (EXCEPT POWER LOCKS)
4	Q23 14RD/DG (POWER LOCKS)

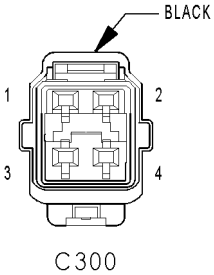

C300 - BLACK (LEFT BODY SIDE)

CAV	CIRCUIT
1	P35 18OR/BK (POWER LOCKS)
2	P36 18PK/BK (POWER LOCKS)
3	Q13 14DB
4	Q23 14RD/WT

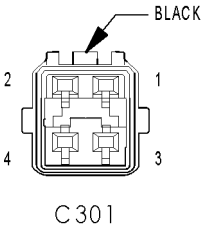

C301 - BLACK (RIGHT REAR DOOR SIDE)

CAV	CIRCUIT
1	P35 18OR/VT (POWER LOCKS)
2	P36 18PK/VT (POWER LOCKS)
3	Q14 14DB/GY
4	Q24 14RD/DG

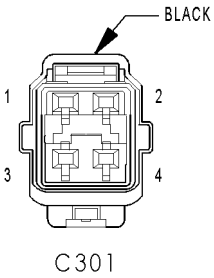

C301 - BLACK (RIGHT BODY SIDE)

CAV	CIRCUIT
1	P35 18OR/BK (POWER LOCKS)
2	P36 18PK/BK (POWER LOCKS)
3	Q14 14GY
4	Q24 14DG

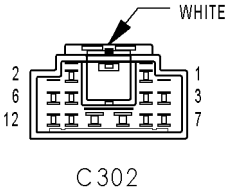

C302 - WHITE (LEFT BODY SIDE)

CAV	CIRCUIT
1	P35 18OR/BK (POWER LOCKS)
2	P36 18PK/BK (POWER LOCKS)
3	G78 20TN/BK
4	V13 18BR/LG
5	V23 18BR/PK
6	P96 20WT/LG (POWER LOCKS)
7	L50 18WT/TN
8	-
9	C15 12BK/WT
10	Z1 12BK
11	Z1 16BK
12	-

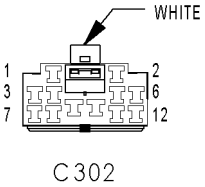

C302 - WHITE (LIFTGATE SIDE)

CAV	CIRCUIT
1	P35 18OR/VT (POWER LOCKS)
2	P36 18PK/VT (POWER LOCKS)
3	G78 20TN/BK
4	V13 18BR/LG
5	V23 18BR/PK
6	P96 20WT/LG (POWER LOCKS)
7	L50 18WT/TN
8	-
9	C15 12BK/WT
10	Z1 12BK
11	Z1 16BK
12	-

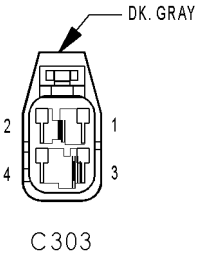

C303 - DK. GRAY (LEFT BODY SIDE)

CAV	CIRCUIT
1	L1 18VT/BK
2	L38 18BR/WT (REAR FOG LAMP)
3	L7 18BK/YL
4	Z1 18BK

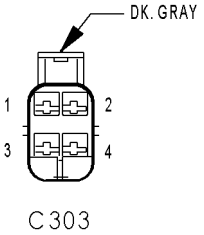

C303 - DK. GRAY (REAR FASCIA SIDE)

CAV	CIRCUIT
1	L1 20VT/BK
2	L38 18BR/WT (REAR FOG LAMP)
3	L7 18BK/YL
4	Z1 18BK

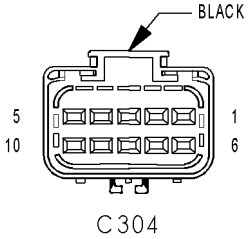

C304 - BLACK (FUEL TANK SIDE)

CAV	CIRCUIT
1	Z1 16BK
2	Z2 20BK/LG
3	G4 20DB
4	A141 16DG/WT
5	-
6	K106 20WT/DG (LEAK DETECTION PUMP)
7	K107 20OR/YL (LEAK DETECTION PUMP)
8	-
9	-
10	-

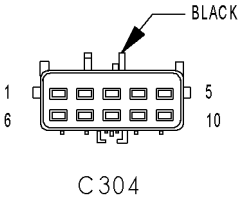

C304 - BLACK (UNDERBODY SIDE)

CAV	CIRCUIT
1	Z1 16BK
2	Z2 20BK/LG
3	G4 20DB
4	A141 16DG/WT
5	-
6	K106 20WT/DG (LEAK DETECTION PUMP)
7	K107 20OR/YL (LEAK DETECTION PUMP)
8	-
9	-
10	-

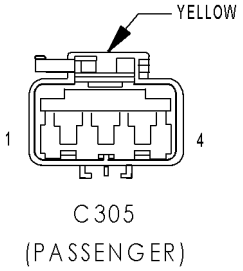

C305 (PASSENGER) - YELLOW (AIRBAG SIDE)

CAV	CIRCUIT
1	-
2	-
3	R32 18OR
4	R34 18WT

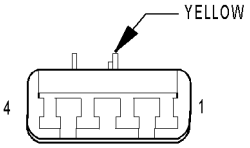

C305
(PASSENGER)

C305 (PASSENGER) - YELLOW (UNIBODY SIDE)

CAV	CIRCUIT
1	-
2	-
3	R32 18LB/OR
4	R34 18LB/WT

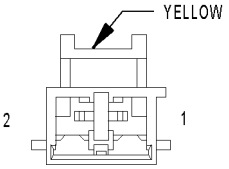

C306
(DRIVER)

C306 (DRIVER) - YELLOW (AIRBAG SIDE)

CAV	CIRCUIT
1	R31 18OR
2	R33 18WT

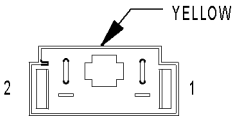

C306
(DRIVER)

C306 (DRIVER) - YELLOW (UNIBODY SIDE)

CAV	CIRCUIT
1	R31 18LG/OR
2	R33 18LG/WT

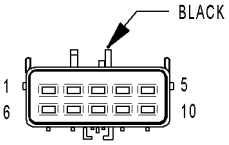

C307
(PASSENGER)

C307 (PASSENGER) - BLACK (SEAT SIDE)

CAV	CIRCUIT
1	-
2	Z122 18BK
3	P141 20TN/LB
4	P139 20VT/WT
5	P137 20VT/DG
6	P7 20LB/BK
7	F98 18RD/WT
8	P143 20BK/DG
9	P131 20RD/DG
10	-

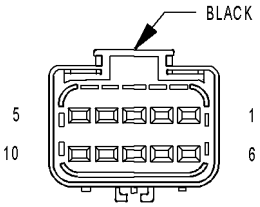

C307
(PASSENGER)

C307 (PASSENGER) - BLACK (UNIBODY SIDE)

CAV	CIRCUIT
1	-
2	Z122 18BK
3	P141 20TN/LB
4	P139 20VT/WT
5	P137 20VT/DG
6	P7 20LB/BK
7	F98 18RD/WT
8	P143 20BK/DG
9	P131 20RD/DG
10	-

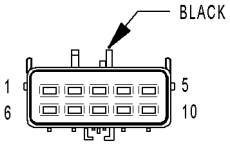

C308
(DRIVER)

C308 (DRIVER) - BLACK (SEAT SIDE)

CAV	CIRCUIT
1	A120 16RD/LG
2	Z121 16BK
3	P141 20TN/LB (HEATED SEAT)
4	P139 20VT/WT (HEATED SEAT)
5	P137 20VT/DG (HEATED SEAT)
6	P7 20LB/BK (HEATED SEAT)
7	F99 18RD/WT (HEATED SEAT)
8	P143 20BK/DG (HEATED SEAT)
9	P131 20RD/DG (HEATED SEAT)
10	-

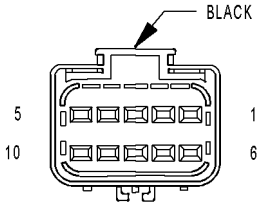

C308
(DRIVER)

C308 (DRIVER) - BLACK (UNIBODY SIDE)

CAV	CIRCUIT
1	A120 16RD/LG
2	Z121 16BK
3	P141 20TN/LB (HEATED SEAT)
4	P139 20VT/WT (HEATED SEAT)
5	P137 20VT/DG (HEATED SEAT)
6	P7 20LB/BK (HEATED SEAT)
7	F98 18RD/WT (HEATED SEAT)
8	P143 20BK/DG (HEATED SEAT)
9	P131 20RD/DG (HEATED SEAT)
10	-

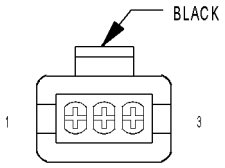

CAMSHAFT
POSITION
SENSOR
(DIESEL)

CAMSHAFT POSITION SENSOR (DIESEL) - BLACK 3 WAY

CAV	CIRCUIT	FUNCTION
1	K944 20BR/LG	CAMSHAFT POSITION SENSOR GROUND
2	K44 20YL/GY	CAMSHAFT POSITION SENSOR SIGNAL
3	A142 20RD/LG	AUTOMATIC SHUT DOWN RELAY OUTPUT

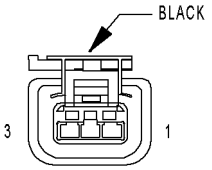

CAMSHAFT
POSITION
SENSOR
(GAS)

CAMSHAFT POSITION SENSOR (GAS) - BLACK 3 WAY

CAV	CIRCUIT	FUNCTION
1	K7 20OR (EXCEPT 1.6L)	5 VOLT SUPPLY
1	F854 20GY/PK (1.6L)	CAMSHAFT POSITION SENSOR 5V SUPPLY
2	K4 20BK/LB (EXCEPT 1.6L)	SENSOR GROUND 1
2	K44 20TN/YL (1.6L)	CAMSHAFT POSITION SENSOR SIGNAL
3	K944 20BR/GY (1.6L)	CAMSHAFT POSITION SENSOR GROUND
3	K44 20TN/YL (EXCEPT 1.6L)	CMP SIGNAL

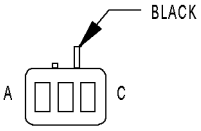

CARGO LAMP

CARGO LAMP - BLACK 3 WAY

CAV	CIRCUIT	FUNCTION
A	M1 20PK	FUSED B(+)
B	M2 20YL	COURTESY LAMPS DRIVER
C	-	-

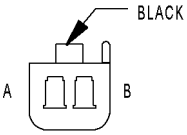

CENTER HIGH MOUNTED STOP LAMP

CENTER HIGH MOUNTED STOP LAMP - BLACK 2 WAY

CAV	CIRCUIT	FUNCTION
A	L50 18WT/TN	BRAKE LAMP SWITCH OUTPUT
B	Z1 18BK	GROUND

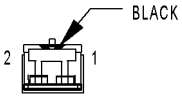

CENTER STACK LAMP

CENTER STACK LAMP - BLACK 2 WAY

CAV	CIRCUIT	FUNCTION
1	E2 20OR	PANEL LAMPS DRIVER
2	Z1 20BK	GROUND

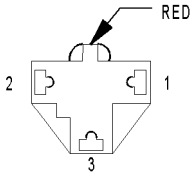

CIGAR LIGHTER

CIGAR LIGHTER - RED 3 WAY

CAV	CIRCUIT	FUNCTION
1	F30 16RD	FUSED IGNITION SWITCH OUTPUT (RUN-ACC)
2	-	-
3	Z1 16BK	GROUND

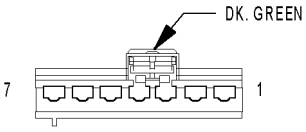

CLOCKSPRING

CLOCKSPRING - DK. GREEN 7 WAY

CAV	CIRCUIT	FUNCTION
1	R43 18BK/LB (EXCEPT SPEED CONTROL)	DRIVER SQUIB 1 LINE 1
1	R43 20BK/LB (SPEED CONTROL)	DRIVER SQUIB 1 LINE 1
2	R45 18DG/LB (EXCEPT SPEED CONTROL)	DRIVER SQUIB 1 LINE 2
2	R45 20DG/LB (SPEED CONTROL)	DRIVER SQUIB 1 LINE 2
3	-	-
4	-	-
5	X3 20BK/RD	HORN RELAY CONTROL
6	V37 20RD/LG (SPEED CONTROL EXCEPT DIESEL)	S/C SWITCH SIGNAL
6	V37 20RD/LG (SPEED CONTROL DIESEL)	SPEED CONTROL SWITCH SIGNAL
7	K914 20BR/WT (SPEED CONTROL DIESEL)	SENSOR GROUND
7	K914 20BR/WT (SPEED CONTROL EXCEPT DIESEL)	SENSOR GROUND 2

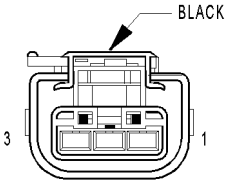

CLUTCH PEDAL POSITION SWITCH (UP) (MTX)

CLUTCH PEDAL POSITION SWITCH (UP) (MTX) - BLACK 3 WAY

CAV	CIRCUIT	FUNCTION
1	K119 20LG/BK (1.6L/DIESEL)	CLUTCH UPSTOP SWITCH SIGNAL
2	Z12 20BK/TN	GROUND
3	T141 18YL/RD (2.4L TURBO)	CLUTCH INTERLOCK SWITCH SIGNAL
3	T141 20YL/RD (EXCEPT 2.4L TURBO)	CLUTCH INTERLOCK SWITCH SIGNAL

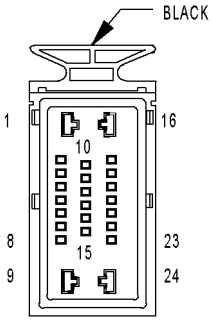

CONTROLLER ANTILOCK BRAKE

CONTROLLER ANTILOCK BRAKE - BLACK 24 WAY

CAV	CIRCUIT	FUNCTION
1	Z1 12BK	GROUND
2	B1 18YL/DB	RIGHT REAR WHEEL SPEED SENSOR SIGNAL
3	B2 18YL	RIGHT REAR WHEEL SPEED SENSOR 12V SUPPLY
4	-	-
5	D25 18VT/YL	PCI BUS
6	B6 18WT/DB	RIGHT FRONT WHEEL SPEED SENSOR SIGNAL
7	B7 18WT	RIGHT FRONT WHEEL SPEED SENSOR 12V SUPPLY
8	-	-
9	A20 12RD/DB	FUSED B(+)
10	F12 18DB/WT	FUSED IGNITION SWITCH OUTPUT (RUN-START)
11	-	-
12	-	-
13	-	-
14	-	-
15	B27 18RD/YL	TRACTION CONTROL SWITCH SENSE
16	Z1 12BK	GROUND
17	-	-
18	L50 18WT/TN (GAS)	BRAKE LAMP SWITCH OUTPUT
18	L50 18WT/TN (DIESEL)	PRIMARY BRAKE SWITCH SIGNAL
19	B3 18LG/DB	LEFT REAR WHEEL SPEED SENSOR SIGNAL
20	B4 18LG	LEFT REAR WHEEL SPEED SENSOR 12V SUPPLY
21	-	-
22	B8 18RD/DB	LEFT FRONT WHEEL SPEED SENSOR SIGNAL
23	B9 18RD	LEFT FRONT WHEEL SPEED SENSOR 12V SUPPLY
24	A10 12RD/DG	FUSED B(+)

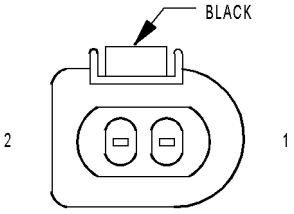

CRANKSHAFT POSITION SENSOR (DIESEL)

CRANKSHAFT POSITION SENSOR (DIESEL) - BLACK 2 WAY

CAV	CIRCUIT	FUNCTION
1	K24 20YL	CRANKSHAFT POSITION SENSOR SIGNAL NO. 2
2	K3 20BK	CRANKSHAFT POSITION SENSOR SIGNAL NO. 1

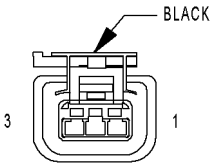

CRANKSHAFT POSITION SENSOR (GAS)

CRANKSHAFT POSITION SENSOR (GAS) - BLACK 3 WAY

CAV	CIRCUIT	FUNCTION
1	K7 20OR (EXCEPT 1.6L)	5 VOLT SUPPLY
1	K924 20BR/WT (1.6L)	CRANKSHAFT POSITION SENSOR GROUND
2	K4 20BK/LB (EXCEPT 1.6L)	SENSOR GROUND 1
2	K24 20GY/BK (1.6L)	CRANKSHAFT POSITION SENSOR SIGNAL
3	K7 20OR (1.6L)	CRANKSHAFT POSITION SENSOR 5V SUPPLY
3	K24 20GY/BK (EXCEPT 1.6L)	CKP SIGNAL

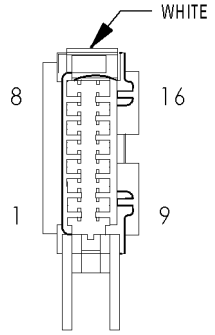

DATA LINK CONNECTOR

DATA LINK CONNECTOR - WHITE 16 WAY

CAV	CIRCUIT	FUNCTION
1	-	-
2	D25 20VT/YL	PCI BUS
3	-	-
4	Z12 20BK/TN	GROUND
5	Z11 20BK/TN (2.0L RHD EATX)	GROUND
5	Z12 20BK/TN (EXCEPT 2.0L RHD)	GROUND
5	Z12 18BK/TN (2.0L RHD MTX)	GROUND
6	-	-
7	D21 20PK (GAS)	SCI TRANSMIT (PCM)
7	D21 20PK (DIESEL)	SCI TRANSMIT (ECM)
8	-	-
9	D24 20WT/DG	FLASH PROGRAM ENABLE
10	-	-
11	-	-
12	D20 20LG (GAS)	SCI RECEIVE (PCM)
13	-	-
14	-	-
15	D15 20WT/DG (EATX)	SCI TRANSMIT (TCM)
16	A14 16RD/WT (EXCEPT 2.0L RHD EATX)	FUSED B(+)
16	A14 18RD/WT (2.0L RHD EATX)	FUSED B(+)

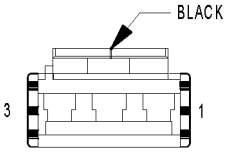

DOME LAMP

DOME LAMP - BLACK 3 WAY

CAV	CIRCUIT	FUNCTION
1	-	-
2	M1 20PK	FUSED B(+)
3	M2 20YL	COURTESY LAMPS DRIVER

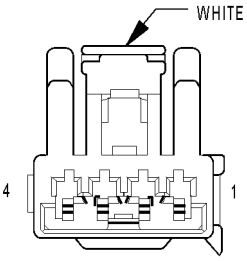

DOME LAMP/
INTRUSION SENSOR
(EXPORT)

DOME LAMP/INTRUSION SENSOR (EXPORT) - WHITE 4 WAY

CAV	CIRCUIT	FUNCTION
1	M2 20YL	COURTESY LAMPS DRIVER
2	M1 20PK	FUSED B(+)
3	Z2 20BK/LG	GROUND
3	Z2 20BK/LG (OVERHEAD CONSOLE)	GROUND
4	G120 20WT/LB	INTRUSION SENSOR SIGNAL

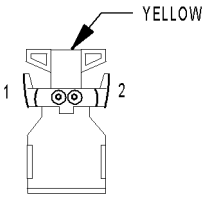

DRIVER
AIRBAG
SQUIB 1

DRIVER AIRBAG SQUIB 1 - YELLOW 2 WAY

CAV	CIRCUIT	FUNCTION
1	R45 20DG/LB	DRIVER SQUIB 1 LINE 2
2	R43 20BK/LB	DRIVER SQUIB 1 LINE 1

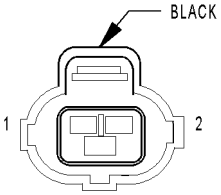

DRIVER DOOR
AJAR SWITCH

DRIVER DOOR AJAR SWITCH - BLACK 2 WAY

CAV	CIRCUIT	FUNCTION
1	G75 20TN/DB (LHD)	DRIVER DOOR AJAR SWITCH SENSE
1	G74 20TN/DB (RHD)	DRIVER DOOR AJAR SWITCH SENSE
2	Z1 20BK	GROUND

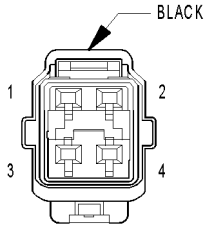

DRIVER DOOR POWER LOCK MOTOR/AJAR SWITCH

DRIVER DOOR POWER LOCK MOTOR/AJAR SWITCH - BLACK 4 WAY

CAV	CIRCUIT	FUNCTION
1	G75 20TN/DB (LHD)	LEFT FRONT DOOR AJAR SWITCH SENSE
1	G74 20TN/DB (RHD)	RIGHT FRONT DOOR AJAR SWITCH SENSE
2	Z1 20BK	GROUND
3	P34 20PK/BK	DRIVER DOOR UNLOCK RELAY OUTPUT
4	P33 20OR/BK	DRIVER DOOR LOCK RELAY OUTPUT

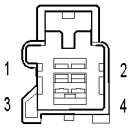

DRIVER HEATED SEAT CUSHION

DRIVER HEATED SEAT CUSHION - 4 WAY

CAV	CIRCUIT	FUNCTION
1	Z121 18BK	GROUND
2	P131 18RD/DG	DRIVER SEAT HEATER CUSHION DRIVER
3	P141 20TN/LB	SEAT TEMPERATURE SENSOR 5V SUPPLY
4	P143 20BK/DG	DRIVER SEAT TEMPERATURE SENSOR RETURN

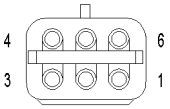

DRIVER HEATED SEAT SWITCH

DRIVER HEATED SEAT SWITCH - 6 WAY

CAV	CIRCUIT	FUNCTION
1	P137 20VT/DG	DRIVER SEAT LOW HEAT LED DRIVER
2	-	-
3	Z121 18BK	GROUND
4	F99 18RD/WT	HEATED SEAT RELAY OUTPUT
5	P139 20VT/WT	DRIVER SEAT HIGH HEAT LED DRIVER
6	P7 20LB/BK	DRIVER HEATED SEAT SWITCH

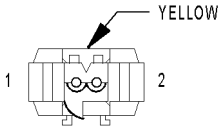

DRIVER SEAT AIRBAG SQUIB

DRIVER SEAT AIRBAG SQUIB - YELLOW 2 WAY

CAV	CIRCUIT	FUNCTION
1	R33 18WT	DRIVER SEAT SQUIB 1 LINE 2
2	R31 18OR	DRIVER SEAT SQUIB 1 LINE 1

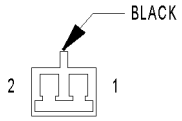

DRIVER SEAT BELT SWITCH

DRIVER SEAT BELT SWITCH - BLACK 2 WAY

CAV	CIRCUIT	FUNCTION
1	G10 20LG/RD	SEAT BELT SWITCH SENSE
2	Z1 20BK	GROUND

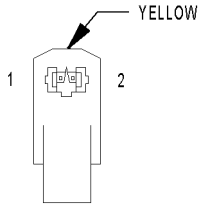

DRIVER SEAT BELT TENSIONER

DRIVER SEAT BELT TENSIONER - YELLOW 2 WAY

CAV	CIRCUIT	FUNCTION
1	R53 20LG/YL	DRIVER SEAT BELT TENSIONER LINE 2
2	R55 20LG/DG	DRIVER SEAT BELT TENSIONER LINE 1

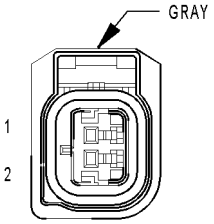

DRIVER SIDE IMPACT SENSOR 1

DRIVER SIDE IMPACT SENSOR 1 - GRAY 2 WAY

CAV	CIRCUIT	FUNCTION
1	R133 18LB/DG	DRIVER SIDE IMPACT SENSOR 1 GROUND
2	R131 18LG/YL	DRIVER SIDE IMPACT SENSOR 1 SIGNAL

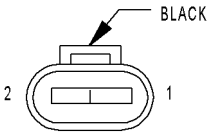

EGR SOLENOID (DIESEL)

EGR SOLENOID (DIESEL) - BLACK 2 WAY

CAV	CIRCUIT	FUNCTION
1	K35 20GY/YL	EGR SOLENOID CONTROL
2	A142 16DG/OR	AUTOMATIC SHUT DOWN RELAY OUTPUT

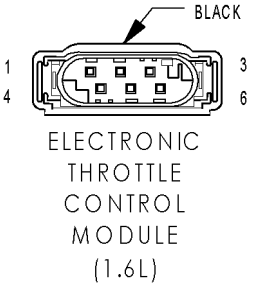

ELECTRONIC THROTTLE CONTROL MODULE (1.6L) - BLACK 6 WAY

CAV	CIRCUIT	FUNCTION
1	K22 20OR/DB	THROTTLE POSITION SENSOR SIGNAL NO. 1
2	K122 20DB/GY	THROTTLE POSITION SENSOR SIGNAL NO. 2
3	F855 20OR/PK	THROTTLE POSITION SENSOR 5V SUPPLY
4	V50 20VT/OR	ELECTRONIC THROTTLE CONTROL POSITIVE MOTOR CONTROL
5	K922 20DB/OR	THROTTLE POSITION SENSOR GROUND
6	V51 20WT	ELECTRONIC THROTTLE CONTROL NEGATIVE MOTOR CONTROL

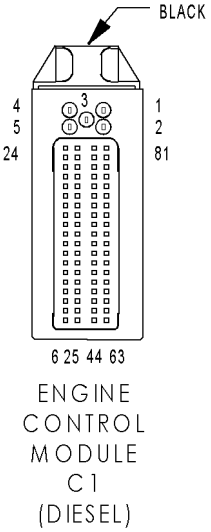

ENGINE CONTROL MODULE C1 (DIESEL) - BLACK 81 WAY

CAV	CIRCUIT	FUNCTION
1	Z12 12BK/LG	GROUND
2	Z12 12BK/LG	GROUND
3	K20 12LB/WT	GENERATOR FIELD CONTROL
4	A142 12RD/LG	AUTOMATIC SHUT DOWN RELAY OUTPUT
5	A142 12RD/LG	AUTOMATIC SHUT DOWN RELAY OUTPUT
6	-	-
7	D25 20VT/YL	PCI BUS
8	K944 20BR/LG	CAMSHAFT POSITION SENSOR GROUND
9	K44 20YL/GY	CAMSHAFT POSITION SENSOR SIGNAL
10	-	-
11	K1 20BK/YL	BOOST PRESSURE SENSOR SIGNAL
12	K155 20YL/WT	MASS AIR FLOW SENSOR SIGNAL
13	N20 20LG/VT	FUEL PRESSURE SENSOR SIGNAL
14	K81 20LB/LG	ACCELERATOR PEDAL POSITION SENSOR NO. 2 SIGNAL
15	K80 20BK/LG	ACCELERATOR PEDAL POSITION SENSOR NO. 1 SIGNAL
16	N920 20BR/GY	FUEL PRESSURE SENSOR GROUND
17	K21 20YL/LG	AMBIENT AIR TEMPERATURE SENSOR SIGNAL
18	-	-
19	A14 18RD/LB	FUSED B(+)
20	Z11 20WT/BK	GROUND
21	K4 20BK/LB	SENSOR GROUND
22	F12 20LB/WT	FUSED IGNITION SWITCH OUTPUT (RUN-START)
23	K9 20RD/BK	SENSOR REFERENCE VOLTAGE B
24	K3 20BK	CRANKSHAFT POSITION SENSOR SIGNAL NO. 1
25	-	-
26	-	-
27	-	-
28	-	-
29	-	-
30	-	-
31	-	-
32	K118 20RD/YL	BATTERY TEMPERATURE SENSOR SIGNAL
33	-	-
34	K167 20BR/YL	ACCELERATOR PEDAL POSITION SENSOR NO. 1 GROUND
35	F858 20LG/VT	ACCELERATOR PEDAL POSITION SENSOR NO. 1 5V SUPPLY
36	-	-
37	-	-
38	V37 20RD/LG	SPEED CONTROL SWITCH SIGNAL
39	-	-

ENGINE CONTROL MODULE C1 (DIESEL) - BLACK 81 WAY

CAV	CIRCUIT	FUNCTION
40	K2 20LG/RD	ENGINE COOLANT TEMPERATURE SENSOR SIGNAL
41	K48 20LG/WT	INLET AIR TEMPERATURE SENSOR SIGNAL
42	Z31 20	GROUND (DRAIN)
43	K24 20YL	CRANKSHAFT POSITION SENSOR SIGNAL NO. 2
44	-	-
45	-	-
46	-	-
47	L50 18WT/LB	PRIMARY BRAKE SWITCH SIGNAL
48	K29 20WT/RD	SECONDARY BRAKE SWITCH SIGNAL
49	A41 18YL	IGNITION SWITCH OUTPUT (START)
50	F859 20LG/PK	SENSOR REFERENCE VOLTAGE A
51	-	-
52	K121 20BR/WT	SENSOR GROUND
53	-	-
54	K957 20BR	MASS AIR FLOW SENSOR GROUND
55	G7 20GY/WT	VEHICLE SPEED SENSOR SIGNAL
56	K981 20LG/BR	ACCELERATOR PEDAL POSITION SENSOR NO. 2 GROUND
57	-	-
58	N907 20BK/VT	VEHICLE SPEED SENSOR GROUND
59	K47 20LB	SWIRL SOLENOID CONTROL
60	Y99 20RD/LB	FUEL PRESSURE SENSOR 5V SUPPLY
61	K51 20LB/YL	AUTOMATIC SHUT DOWN RELAY CONTROL
62	-	-
63	D21 20RD	SCI TRANSMIT (ECM)
64	-	-
65	-	-
66	-	-
67	-	-
68	-	-
69	C28 20LB/RD	A/C COMPRESSOR CLUTCH RELAY CONTROL
70	C24 20LB/PK	LOW SPEED RADIATOR FAN RELAY CONTROL
71	C27 20LB/BK	HIGH SPEED RADIATOR FAN RELAY CONTROL
72	K31 20BR/LB	FUEL PUMP RELAY CONTROL
73	-	-
74	K90 20YL/BK	STARTER MOTOR RELAY CONTROL
75	C41 20LG/LB	CABIN HEATER RELAY NO. 1 CONTROL
76	K137 20LB/GY	WASTEGATE SOLENOID CONTROL
77	K152 20WT	GLOW PLUG RELAY CONTROL
78	-	-
79	C42 20GY/LB	CABIN HEATER RELAY NO. 2 CONTROL
80	K46 20BK/WT	FUEL PRESSURE SOLENOID CONTROL
81	K46 20BK/WT	FUEL PRESSURE SOLENOID CONTROL

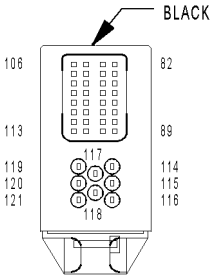

ENGINE CONTROL MODULE C2 (DIESEL)

ENGINE CONTROL MODULE C2 (DIESEL) - BLACK 40 WAY

CAV	CIRCUIT	FUNCTION
104	-	-
105	-	-
106	-	-
107	-	-
108	-	-
109	C22 20VT/YL	A/C HIGH PRESSURE SIGNAL
100	-	-
101	-	-
102	T141 20YL/RD	CLUTCH INTERLOCK SWITCH SIGNAL
103	-	-
110	G9 20GY/BK	RED BRAKE WARNING INDICATOR DRIVER
111	G6 20VT/LG	ENGINE OIL PRESSURE SWITCH SIGNAL
112	K119 20LG/BK	CLUTCH UPSTOP SWITCH SIGNAL
113	-	-
114	-	-
115	K14 12BK/YL	FUEL INJECTOR NO. 4 CONTROL
116	K63 12LB	COMMON INJECTOR DRIVER
117	-	-
118	K11 12BK/LB	FUEL INJECTOR NO. 1 CONTROL
119	K12 12BK/VT	FUEL INJECTOR NO. 2 CONTROL
120	K13 12BK/RD	FUEL INJECTOR NO. 3 CONTROL
121	-	-
82	-	-
83	-	-
84	-	-
85	-	-
86	-	-
87	-	-
88	K35 20GY/YL	EGR SOLENOID CONTROL
89	K35 20GY/YL	EGR SOLENOID CONTROL
90	-	-
91	-	-
92	-	-
93	-	-
94	-	-
95	-	-
96	-	-
97	-	-
98	-	-
99	-	-

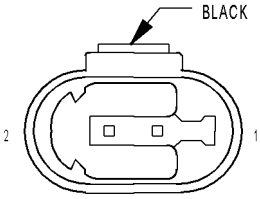

ENGINE COOLANT TEMPERATURE SENSOR (DIESEL)

ENGINE COOLANT TEMPERATURE SENSOR (DIESEL) - BLACK 2 WAY

CAV	CIRCUIT	FUNCTION
1	K4 20BK/LB	SENSOR GROUND
2	K2 20LG/RD	ENGINE COOLANT TEMPERATURE SENSOR SIGNAL

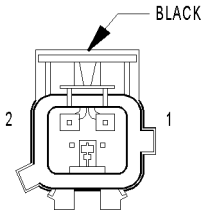

ENGINE COOLANT TEMPERATURE SENSOR (GAS)

ENGINE COOLANT TEMPERATURE SENSOR (GAS) - BLACK 2 WAY

CAV	CIRCUIT	FUNCTION
1	K4 20BK/LB (1.6L)	ENGINE COOLANT TEMPERATURE SENSOR GROUND
1	K4 20BK/LB (EXCEPT 1.6L)	SENSOR GROUND 1
2	K2 20TN/BK (EXCEPT 1.6L)	ECT SIGNAL
2	K2 20TN/BK (1.6L)	ENGINE COOLANT TEMPERATURE SENSOR SIGNAL

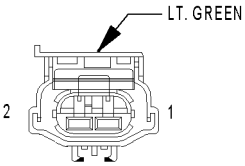

ENGINE OIL PRESSURE SWITCH

ENGINE OIL PRESSURE SWITCH - LT. GREEN 2 WAY

CAV	CIRCUIT	FUNCTION
1	G6 20GY (1.6L)	ENGINE OIL PRESSURE SWITCH SIGNAL
1	G6 20VT/LG (DIESEL)	ENGINE OIL PRESSURE SWITCH SIGNAL
1	G6 20GY (OTHER)	OIL PRESSURE SIGNAL
2	-	-

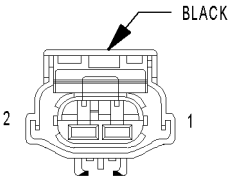

EVAP/PURGE SOLENOID (GAS)

EVAP/PURGE SOLENOID (GAS) - BLACK 2 WAY

CAV	CIRCUIT	FUNCTION
1	F12 20DB/WT (1.6L)	FUSED IGNITION SWITCH OUTPUT (RUN-START)
1	K108 20WT/TN (EXCEPT 1.6L)	EVAP PURGE SIGNAL
2	K52 20PK/BK (1.6L)	EVAP/PURGE SOLENOID CONTROL
2	K52 20DB/WT (EXCEPT 1.6L)	EVAP PURGE CONTROL

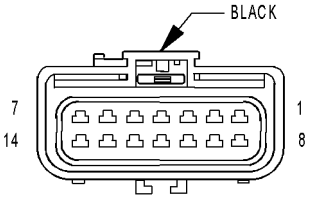

FRONT POWER WINDOW SWITCH

FRONT POWER WINDOW SWITCH - BLACK 14 WAY

CAV	CIRCUIT	FUNCTION
1	Q18 14GY/BK	MASTER RIGHT REAR WINDOW DRIVER (UP)
2	Q28 14DG/WT	MASTER RIGHT REAR WINDOW DRIVER (DOWN)
3	Q22 14VT/WT	RIGHT FRONT WINDOW DRIVER (DOWN)
4	Z1 14BK	GROUND
5	Q1 14YL	WINDOW SWITCH SUPPLY
6	E2 20OR	PANEL LAMPS DRIVER
7	Q12 14BR/LB	RIGHT FRONT WINDOW DRIVER (UP)
8	Q17 14DB/WT	MASTER LEFT REAR WINDOW DRIVER (UP)
9	Q27 14RD/BK	MASTER LEFT REAR WINDOW DRIVER (DOWN)
10	-	-
11	-	-
12	F21 14TN	FUSED IGNITION SWITCH OUTPUT (RUN)
13	Q21 14WT	LEFT FRONT WINDOW DRIVER (DOWN)
14	Q11 14LB	LEFT FRONT WINDOW DRIVER (UP)

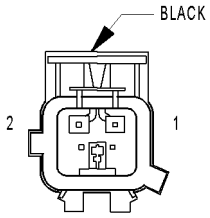

FRONT WASHER PUMP MOTOR

FRONT WASHER PUMP MOTOR - BLACK 2 WAY

CAV	CIRCUIT	FUNCTION
1	V20 18BK/WT	REAR WASHER MOTOR CONTROL
2	V10 18BR	WASHER SWITCH SENSE

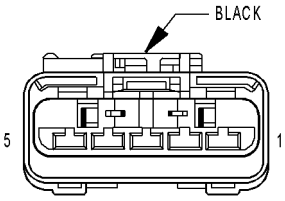

FRONT WIPER MOTOR

FRONT WIPER MOTOR - BLACK 5 WAY

CAV	CIRCUIT	FUNCTION
1	Z1 16BK	GROUND
2	V5 16DG	WIPER SWITCH MODE SENSE
3	F88 16RD/WT (OTHER)	FUSED IGNITION SWITCH OUTPUT (RUN-ACC)
3	F88 16DB (DIESEL RHD/2.0L RHD MTX)	FUSED IGNITION SWITCH OUTPUT (RUN-ACC)
4	V3 16BR/WT	WIPER SWITCH LOW SPEED OUTPUT
5	V4 16RD/YL	WIPER SWITCH HIGH SPEED OUTPUT

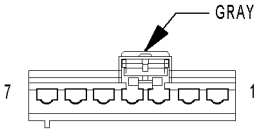

FRONT WIPER/ WASHER SWITCH

FRONT WIPER/WASHER SWITCH - GRAY 7 WAY

CAV	CIRCUIT	FUNCTION
1	V5 18DG	WIPER SWITCH MODE SENSE
2	Z1 18BK	GROUND
3	V10 18BR	WASHER SWITCH SENSE
4	F88 16DB	FUSED IGNITION SWITCH OUTPUT (RUN-ACC)
5	V4 16RD/YL	WIPER SWITCH HIGH SPEED OUTPUT
6	V3 16BR/WT	WIPER SWITCH LOW SPEED OUTPUT
7	-	-

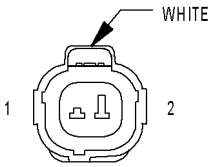

FUEL HEATER MODULE (DIESEL)

FUEL HEATER MODULE (DIESEL) - WHITE 2 WAY

CAV	CIRCUIT	FUNCTION
1	A93 14RD/BK	FUEL HEATER RELAY OUTPUT
2	-	-

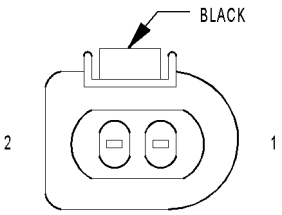

FUEL INJECTOR NO. 1 (DIESEL)

FUEL INJECTOR NO. 1 (DIESEL) - BLACK 2 WAY

CAV	CIRCUIT	FUNCTION
1	K11 12BK/LB	FUEL INJECTOR NO. 1 CONTROL
2	K63 12BK	COMMON INJECTOR DRIVER

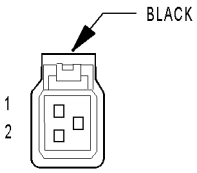

FUEL INJECTOR NO. 1 (GAS)

FUEL INJECTOR NO. 1 (GAS) - BLACK 2 WAY

CAV	CIRCUIT	FUNCTION
1	K11 18WT/DB (1.6L)	FUEL INJECTOR NO. 1 DRIVER
1	K11 18WT/DB (EXCEPT 1.6L)	INJECTOR CONTROL NO. 1
2	A142 18DG/OR	AUTOMATIC SHUT DOWN RELAY OUTPUT

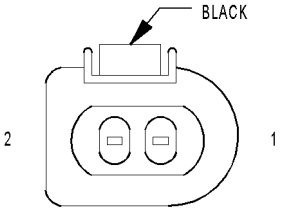

FUEL INJECTOR NO. 2 (DIESEL)

FUEL INJECTOR NO. 2 (DIESEL) - BLACK 2 WAY

CAV	CIRCUIT	FUNCTION
1	K12 12BK/VT	FUEL INJECTOR NO. 2 CONTROL
2	K63 12LB	COMMON INJECTOR DRIVER

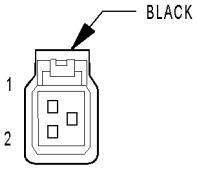

FUEL INJECTOR NO. 2 (GAS)

FUEL INJECTOR NO. 2 (GAS) - BLACK 2 WAY

CAV	CIRCUIT	FUNCTION
1	K12 18TN (1.6L)	FUEL INJECTOR NO. 2 DRIVER
1	K12 18TN (EXCEPT 1.6L)	INJECTOR CONTROL NO. 2
2	A142 18DG/OR	AUTOMATIC SHUT DOWN RELAY OUTPUT

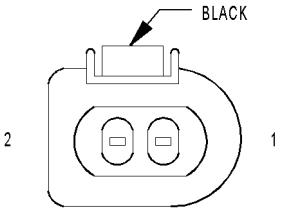

FUEL INJECTOR NO. 3 (DIESEL)

FUEL INJECTOR NO. 3 (DIESEL) - BLACK 2 WAY

CAV	CIRCUIT	FUNCTION
1	K13 12BK/RD	FUEL INJECTOR NO. 3 CONTROL
2	K63 12LB	COMMON INJECTOR DRIVER

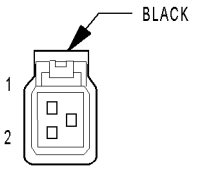

FUEL INJECTOR NO. 3 (GAS)

FUEL INJECTOR NO. 3 (GAS) - BLACK 2 WAY

CAV	CIRCUIT	FUNCTION
1	K13 18YL/WT (1.6L)	FUEL INJECTOR NO. 3 DRIVER
1	K13 18YL/WT (EXCEPT 1.6L)	INJECTOR CONTROL NO. 3
2	A142 18DG/OR	AUTOMATIC SHUT DOWN RELAY OUTPUT

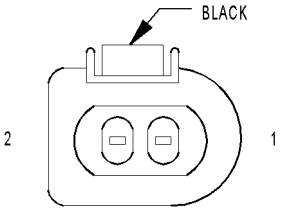

FUEL INJECTOR NO. 4 (DIESEL)

FUEL INJECTOR NO. 4 (DIESEL) - BLACK 2 WAY

CAV	CIRCUIT	FUNCTION
1	K14 12BK/YL	FUEL INJECTOR NO. 4 CONTROL
2	K63 12BK	COMMON INJECTOR DRIVER

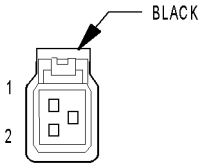

FUEL INJECTOR NO. 4 (GAS)

FUEL INJECTOR NO. 4 (GAS) - BLACK 2 WAY

CAV	CIRCUIT	FUNCTION
1	K14 18LB/BR (1.6L)	FUEL INJECTOR NO. 4 DRIVER
1	K14 18LB/BR (EXCEPT 1.6L)	INJECTOR CONTROL NO. 4
2	A142 18DG/OR	AUTOMATIC SHUT DOWN RELAY OUTPUT

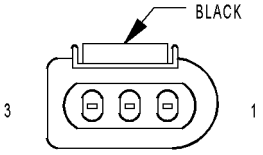

FUEL PRESSURE SENSOR (DIESEL)

FUEL PRESSURE SENSOR (DIESEL) - BLACK 3 WAY

CAV	CIRCUIT	FUNCTION
1	N920 20BR/GY	FUEL PRESSURE SENSOR GROUND
2	N20 20LG/VT	FUEL PRESSURE SENSOR SIGNAL
3	Y99 20RD/LB	FUEL PRESSURE SENSOR 5V SUPPLY

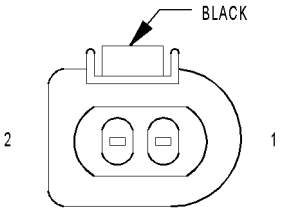

FUEL PRESSURE SOLENOID (DIESEL)

FUEL PRESSURE SOLENOID (DIESEL) - BLACK 2 WAY

CAV	CIRCUIT	FUNCTION
1	K46 20BK/WT	FUEL PRESSURE SOLENOID CONTROL
2	A142 20RD/LG	AUTOMATIC SHUT DOWN RELAY OUTPUT

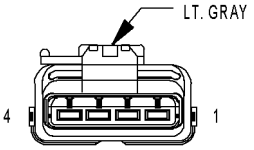

FUEL PUMP MODULE

FUEL PUMP MODULE - LT. GRAY 4 WAY

CAV	CIRCUIT	FUNCTION
1	Z1 16BK	GROUND
2	Z2 20BK/LG	GROUND
3	G4 20DB	FUEL LEVEL SENSOR SIGNAL
4	A141 16DG/WT	FUEL PUMP RELAY OUTPUT

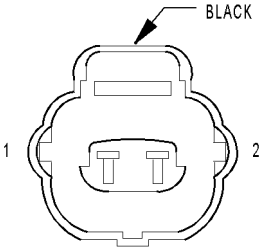

GENERATOR (2.4L TURBO)

GENERATOR (2.4L TURBO) - BLACK 2 WAY

CAV	CIRCUIT	FUNCTION
1	Z1 18BK	GROUND
2	K20 18DG	GEN FIELD CONTROL

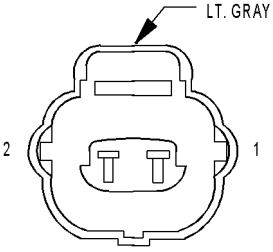

GENERATOR (DIESEL)

GENERATOR (DIESEL) - LT. GRAY 2 WAY

CAV	CIRCUIT	FUNCTION
1	K20 12LB/WT	GENERATOR FIELD CONTROL
2	A142 20RD/LG	AUTOMATIC SHUT DOWN RELAY OUTPUT

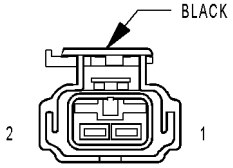

GENERATOR (EXCEPT 2.4L TURBO)

GENERATOR (EXCEPT 2.4L TURBO) - BLACK 2 WAY

CAV	CIRCUIT	FUNCTION
1	K20 18DG (1.6L)	GENERATOR FIELD CONTROL
1	Z1 18BK (2.0L/2.4L)	GROUND
2	K20 18DG (2.0L/2.4L)	GEN FIELD CONTROL
2	A142 18DG/OR (1.6L)	AUTOMATIC SHUT DOWN RELAY OUTPUT

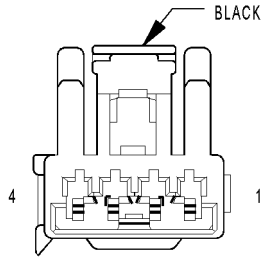

HEADLAMP LEVELING SWITCH (EXPORT)

HEADLAMP LEVELING SWITCH (EXPORT) - BLACK 4 WAY

CAV	CIRCUIT	FUNCTION
1	L13 20BR/YL	HEADLAMP ADJUST SIGNAL
2	L43 18VT	FUSED LEFT LOW BEAM OUTPUT
3	Z1 20BK	GROUND
4	E2 20OR	PANEL LAMPS DRIVER

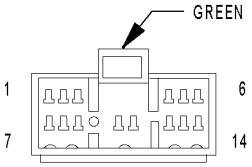

HEATED SEAT MODULE

HEATED SEAT MODULE - GREEN 14 WAY

CAV	CIRCUIT	FUNCTION
1	P7 20LB/BK	DRIVER HEATED SEAT SWITCH
2	P141 20TN/LB	SEAT TEMPERATURE SENSOR 5V SUPPLY
3	P130 18RD/TN	PASSENGER SEAT HEATER CUSHION DRIVER
4	F98 18RD/WT	HEATED SEAT RELAY OUTPUT
5	P131 18RD/DG	DRIVER SEAT HEATER CUSHION DRIVER
6	F98 20RD/WT	HEATED SEAT RELAY OUTPUT
7	P144 20BK/LG	PASSENGER SEAT TEMPERATURE SENSOR RETURN
8	P143 20BK/DG	DRIVER SEAT TEMPERATURE SENSOR RETURN
9	P8 20LB/WT	PASSENGER HEATED SEAT SWITCH
10	P138 20VT/LG	PASSENGER SEAT LOW HEAT LED DRIVER
11	P140 20VT/BK	PASSENGER SEAT HIGH HEAT LED DRIVER
12	P137 20VT/DG	DRIVER SEAT LOW HEAT LED DRIVER
13	Z122 18BK	GROUND
14	P139 20 VT/WT	DRIVER SEAT HIGH HEAT LED DRIVER

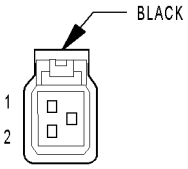

HIGH NOTE HORN

HIGH NOTE HORN - BLACK 2 WAY

CAV	CIRCUIT	FUNCTION
1	X2 20DG/RD	HORN RELAY OUTPUT
2	Z1 20BK	GROUND

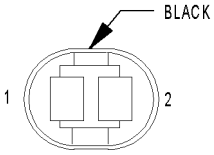

HOOD AJAR SWITCH (EXPORT)

HOOD AJAR SWITCH (EXPORT) - BLACK 2 WAY

CAV	CIRCUIT	FUNCTION
1	G70 20BR/TN	HOOD AJAR SWITCH SENSE
2	Z1 20BK	GROUND

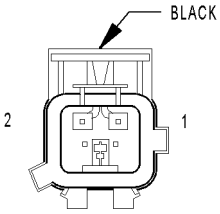

IDLE AIR CONTROL MOTOR (2.0L/2.4L)

IDLE AIR CONTROL MOTOR (2.0L/2.4L) - BLACK 2 WAY

CAV	CIRCUIT	FUNCTION
1	K610 18VT/GY	IAC MOTOR CONTROL
2	K961 18BR/VT	IAC RETURN

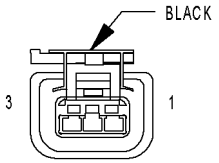

IGNITION COIL (GAS)

IGNITION COIL (GAS) - BLACK 3 WAY

CAV	CIRCUIT	FUNCTION
1	K17 18DB/TN (1.6L)	IGNITION COIL NO. 2 DRIVER
1	K17 16DB/TN (2.4L TURBO)	COIL CONTROL NO. 2
1	K17 18DB/TN (2.0L/2.4L EXCEPT TURBO)	COIL CONTROL NO. 2
2	A142 16DG/OR (2.0L/2.4L EXCEPT TURBO)	AUTOMATIC SHUT DOWN RELAY OUTPUT
2	A142 18DG/OR (1.6L/2.4L TURBO)	AUTOMATIC SHUT DOWN RELAY OUTPUT
3	K19 18BK/GY (2.0L/2.4L EXCEPT TURBO)	COIL CONTROL NO. 1
3	K19 16BK/GY (2.4L TURBO)	COIL CONTROL NO. 1
3	K19 18BK/GY (1.6L)	IGNITION COIL NO. 1 DRIVER

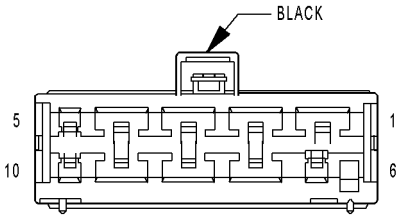

IGNITION SWITCH C1

IGNITION SWITCH C1 - BLACK 10 WAY

CAV	CIRCUIT	FUNCTION
1	A1 14RD	FUSED B(+)
1	A1 14RD (AUTOSTICK)	FUSED B(+)
2	A21 14DB	IGNITION SWITCH OUTPUT (RUN-START)
3	F30 16RD	IGNITION SWITCH OUTPUT (RUN-ACC)
3	F30 16RD	IGNITION SWITCH OUTPUT (RUN-ACC)
4	F1 16DB/BK	FUSED B(+)
4	F1 16DB/BK (POWER OUTLET)	FUSED B(+)
5	G26 20LB	KEY-IN IGNITION SWITCH SENSE
6	A41 14YL	IGNITION SWITCH OUTPUT (START)
7	A31 14BK/WT	IGNITION SWITCH OUTPUT (RUN-ACC)
8	A22 12BK/OR	IGNITION SWITCH OUTPUT (RUN)
9	A2 12PK/BK	FUSED B(+)
10	-	-

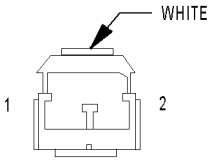

IGNITION SWITCH C2 (AUTOSTICK)

IGNITION SWITCH C2 (AUTOSTICK) - WHITE 2 WAY

CAV	CIRCUIT	FUNCTION
1	A81 20DG/RD	FUSED B(+)
2	F11 20LG/WT	IGNITION SWITCH OUTPUT (UNLOCK-RUN-START)

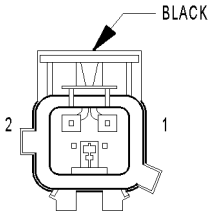

INLET AIR TEMPERATURE SENSOR (GAS)

INLET AIR TEMPERATURE SENSOR (GAS) - BLACK 2 WAY

CAV	CIRCUIT	FUNCTION
1	K21 20BK/RD (1.6L)	INLET AIR TEMPERATURE SENSOR SIGNAL
1	K21 20BK/RD (EXCEPT 1.6L)	IAT SIGNAL
2	K921 20RD (1.6L)	INLET AIR TEMPERATURE SENSOR GROUND
2	K4 20BK/LB (EXCEPT 1.6L)	SENSOR GROUND 1

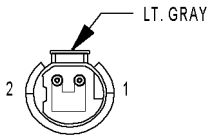

INPUT SPEED SENSOR

INPUT SPEED SENSOR - LT. GRAY 2 WAY

CAV	CIRCUIT	FUNCTION
1	T13 20DB/BK (2.4L TURBO)	SPEED SENSOR GROUND
1	T13 18DB/BK (2.0L/2.4L EXCEPT TURBO)	SPEED SENSOR GROUND
2	T52 20RD/BK	INPUT SPEED SENSOR SIGNAL

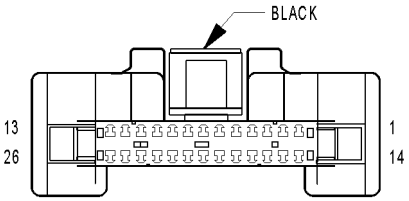

INSTRUMENT CLUSTER C1

INSTRUMENT CLUSTER C1 - BLACK 26 WAY

CAV	CIRCUIT	FUNCTION
1	Z1 18BK	GROUND
2	Z2 20BK/LG	GROUND
3	L7 18BK/YL	HEADLAMP SWITCH OUTPUT
4	M1 20PK	FUSED B(+)
5	-	-
6	-	-
7	M2 20YL	COURTESY LAMPS DRIVER
8	-	-
9	G75 20TN (LHD)	LEFT FRONT DOOR AJAR SWITCH SENSE
9	G74 20TN/RD (RHD)	RIGHT FRONT DOOR AJAR SWITCH SENSE
10	L161 18LG/OR (LHD)	LEFT TURN SIGNAL (OUT)
11	L61 18LG	LEFT TURN SIGNAL (IN)
12	L160 18TN/RD (LHD)	RIGHT TURN SIGNAL (OUT)
13	L60 18TN	RIGHT TURN SIGNAL (IN)
14	G5 20DB/WT (VTSS)	FUSED IGNITION SWITCH OUTPUT (RUN-START)
14	G5 20DB/BK (OTHER)	FUSED IGNITION SWITCH OUTPUT (RUN-START)
15	F11 20RD/WT (AUTOSTICK)	IGNITION SWITCH OUTPUT (UNLOCK-RUN-START)
16	-	-
17	L4 16VT/WT	DIMMER SWITCH LOW BEAM OUTPUT
18	L3 16RD/OR	DIMMER SWITCH HIGH BEAM OUTPUT
19	G26 20LB	KEY-IN IGNITION SWITCH SENSE
20	G10 20LG/RD	SEAT BELT SWITCH SENSE
21	G11 20WT/BK	RED BRAKE WARNING INDICATOR DRIVER
22	E2 20OR	PANEL LAMPS DRIVER
23	M9 20DB/OR	PASSENGER DOOR AJAR/RKE SENSE
24	G78 20TN/BK	LIFTGATE AJAR SWITCH SENSE
25	D24 20WT/DG	FLASH PROGRAM ENABLE
26	D25 20VT/YL	PCI BUS

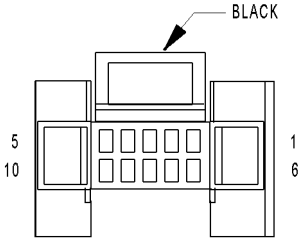

INSTRUMENT CLUSTER C2

INSTRUMENT CLUSTER C2 - BLACK 10 WAY

CAV	CIRCUIT	FUNCTION
1	L39 18LB (FOG LAMPS)	FOG LAMP SWITCH OUTPUT
2	G69 20BK/OR (RKE)	VTSS INDICATOR DRIVER
3	-	-
4	-	-
5	-	-
6	L38 18BR/WT (REAR FOG LAMPS)	REAR FOG LAMP SWITCH OUTPUT
7	E19 20RD	PANEL LAMPS DIMMER SIGNAL
8	L1 20VT/BK (MTX)	BACK-UP LAMP SWITCH OUTPUT
9	G4 20DB	FUEL LEVEL SENSOR SIGNAL
10	-	-

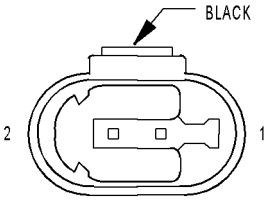

INTAKE AIR TEMPERATURE SENSOR (DIESEL)

INTAKE AIR TEMPERATURE SENSOR (DIESEL) - BLACK 2 WAY

CAV	CIRCUIT	FUNCTION
1	K121 20BR/WT	SENSOR GROUND
2	K48 20LG/WT	INTAKE AIR TEMPERATURE SENSOR SIGNAL

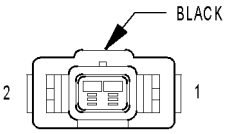

KNOCK SENSOR (GAS)

KNOCK SENSOR (GAS) - BLACK 2 WAY

CAV	CIRCUIT	FUNCTION
1	K42 20DB/LG (1.6L)	KNOCK SENSOR SIGNAL
1	K42 20DB/LG (EXCEPT 1.6L)	KS SIGNAL
2	K45 20BK/VT (EXCEPT 1.6L)	KS RETURN
2	K45 20BK/VT (1.6L)	KNOCK SENSOR GROUND

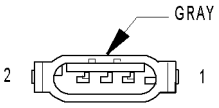

LEFT BACK-UP LAMP

LEFT BACK-UP LAMP - GRAY 2 WAY

CAV	CIRCUIT	FUNCTION
1	L1 18VT/BK	BACK-UP LAMP SWITCH OUTPUT
2	Z1 18BK	GROUND

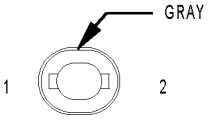

LEFT CITY LAMP (EXPORT)

LEFT CITY LAMP (EXPORT) - GRAY 2 WAY

CAV	CIRCUIT	FUNCTION
1	Z1 18BR	GROUND
2	L7 18BK	HEADLAMP SWITCH OUTPUT

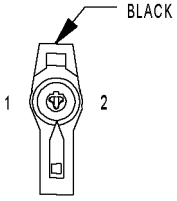

LEFT CYLINDER LOCK SWITCH

LEFT CYLINDER LOCK SWITCH - BLACK 2 WAY

CAV	CIRCUIT	FUNCTION
1	P97 20LG	LEFT DOOR SWITCH MUX
2	Z1 20BK	GROUND

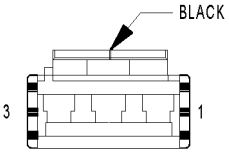

LEFT DOOR LOCK SWITCH

LEFT DOOR LOCK SWITCH - BLACK 3 WAY

CAV	CIRCUIT	FUNCTION
1	L7 18BK/YL	HEADLAMP SWITCH OUTPUT
2	P97 20WT/DG	LEFT DOOR SWITCH MUX
2	P97 18LG	LEFT DOOR SWITCH MUX
3	Z1 18BK	GROUND

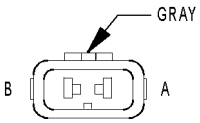

LEFT FOG LAMP

LEFT FOG LAMP - GRAY 2 WAY

CAV	CIRCUIT	FUNCTION
B	Z1 18BK	GROUND
A	L39 18LB	FOG LAMP SWITCH OUTPUT

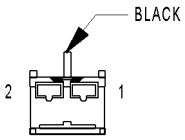

LEFT FRONT DOOR SPEAKER

LEFT FRONT DOOR SPEAKER - BLACK 2 WAY

CAV	CIRCUIT	FUNCTION
1	X55 18BR/DB	LEFT FRONT SPEAKER (-)
2	X53 18DG	LEFT FRONT SPEAKER (+)

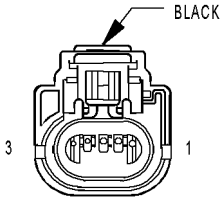

LEFT FRONT PARK/TURN SIGNAL LAMP (EXCEPT EXPORT)

LEFT FRONT PARK/TURN SIGNAL LAMP (EXCEPT EXPORT) - BLACK 3 WAY

CAV	CIRCUIT	FUNCTION
1	Z1 18BK	GROUND
2	L7 18BK/YL	HEADLAMP SWITCH OUTPUT
3	L161 18LG/OR	LEFT TURN SIGNAL (OUT)

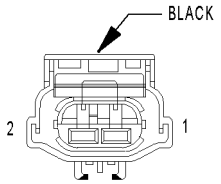

LEFT FRONT POWER WINDOW MOTOR

LEFT FRONT POWER WINDOW MOTOR - BLACK 2 WAY

CAV	CIRCUIT	FUNCTION
1	Q21 14WT	LEFT WINDOW DRIVER (DOWN)
2	Q11 14LB	LEFT WINDOW DRIVER (UP)

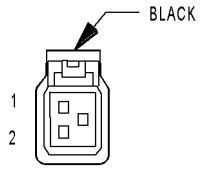

LEFT FRONT SIDE MARKER (EXPORT)

LEFT FRONT SIDE MARKER (EXPORT) - BLACK 2 WAY

CAV	CIRCUIT	FUNCTION
1	L61 18LG	LEFT TURN SIGNAL (IN)
2	Z1 18BK	GROUND

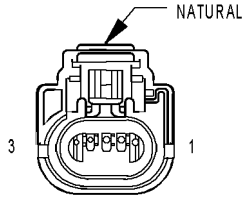

LEFT FRONT TURN SIGNAL LAMP (EXPORT)

LEFT FRONT TURN SIGNAL LAMP (EXPORT) - NATURAL 3 WAY

CAV	CIRCUIT	FUNCTION
1	Z1 18BK	GROUND
2	-	-
3	L61 18LG	LEFT TURN SIGNAL (OUT)

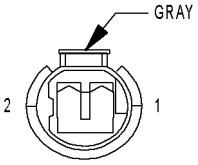

LEFT FRONT WHEEL SPEED SENSOR

LEFT FRONT WHEEL SPEED SENSOR - (SENSOR SIDE) 2 WAY

CAV	CIRCUIT	FUNCTION
1	RD	LEFT FRONT WHEEL SPEED SENSOR 12V SUPPLY
2	RD/DB	LEFT FRONT WHEEL SPEED SENSOR SIGNAL

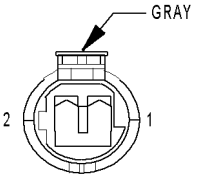

LEFT FRONT WHEEL SPEED SENSOR

LEFT FRONT WHEEL SPEED SENSOR - GRAY 2 WAY

CAV	CIRCUIT	FUNCTION
1	B9 18RD	LEFT FRONT WHEEL SPEED SENSOR 12V SUPPLY
2	B8 18RD/DB	LEFT FRONT WHEEL SPEED SENSOR SIGNAL

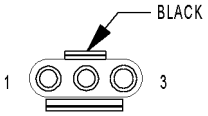

LEFT HEADLAMP LEVELING MODULE (EXPORT)

LEFT HEADLAMP LEVELING MODULE (EXPORT) - BLACK 3 WAY

CAV	CIRCUIT	FUNCTION
1	Z1 18BR	GROUND
2	L13 18OR	HEADLAMP ADJUST SIGNAL
3	L43 18YL	FUSED LEFT LOW BEAM OUTPUT

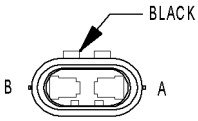

LEFT HIGH BEAM HEADLAMP

LEFT HIGH BEAM HEADLAMP - BLACK 2 WAY

CAV	CIRCUIT	FUNCTION
A	L33 16LG/BR	DIMMER SWITCH HIGH BEAM OUTPUT
B	Z1 16BK	GROUND

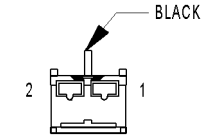

LEFT INSTRUMENT PANEL SPEAKER

LEFT INSTRUMENT PANEL SPEAKER - BLACK 2 WAY

CAV	CIRCUIT	FUNCTION
1	X55 18RD/BR	LEFT FRONT SPEAKER (-)
2	X53 18DG	LEFT FRONT SPEAKER (+)

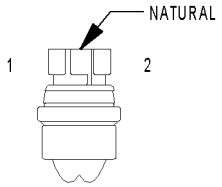

LEFT LICENSE LAMP (EXPORT)

LEFT LICENSE LAMP (EXPORT) - NATURAL 2 WAY

CAV	CIRCUIT	FUNCTION
1	L7 18BK/YL	HEADLAMP SWITCH OUTPUT
2	Z1 18BK	GROUND

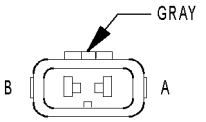

LEFT LOW BEAM HEADLAMP

LEFT LOW BEAM HEADLAMP - GRAY 2 WAY

CAV	CIRCUIT	FUNCTION
A	L43 18VT (LHD)	FUSED LEFT LOW BEAM OUTPUT
A	L43 14VT (RHD)	FUSED LEFT LOW BEAM OUTPUT
B	Z1 12BK (LHD)	GROUND
B	Z1 14BK (RHD)	GROUND

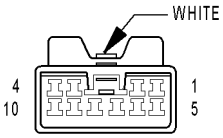

LEFT POWER MIRROR

LEFT POWER MIRROR - WHITE 10 WAY

CAV	CIRCUIT	FUNCTION
1	Z1 20BK	GROUND
2	P73 20YL/PK (LHD)	LEFT MIRROR RIGHT/DOWN MOVEMENT
2	P76 20YL/PK (RHD)	LEFT/RIGHT MIRROR RIGHT/DOWN MOVEMENT
3	C16 20LB/YL	FUSED REAR WINDOW DEFOGGER SWITCH OUTPUT
4	P71 20BR/YL	LEFT MIRROR UP MOVEMENT
5	P75 20DB/WT	LEFT MIRROR LEFT MOVEMENT
6	P159 20DG/WT (POWER FOLDING MIRRORS)	MIRROR UNFOLD
7	-	-
8	-	-
9	-	-
10	P160 20LB/BK (POWER FOLDING MIRRORS)	MIRROR FOLD

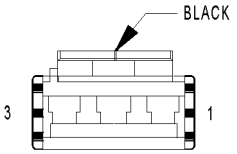

LEFT REAR DOOR POWER LOCK MOTOR

LEFT REAR DOOR POWER LOCK MOTOR - BLACK 3 WAY

CAV	CIRCUIT	FUNCTION
1	P35 18OR/VT	DOOR LOCK RELAY OUTPUT
2	-	-
3	P36 18PK/VT	DOOR UNLOCK RELAY OUTPUT

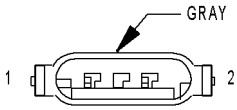

LEFT REAR FOG LAMP (LHD EXPORT)

LEFT REAR FOG LAMP (LHD EXPORT) - GRAY 2 WAY

CAV	CIRCUIT	FUNCTION
1	L38 18BR/WT	REAR FOG LAMP SWITCH OUTPUT
2	Z1 18BK	GROUND

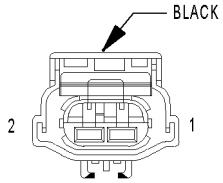

LEFT REAR POWER WINDOW MOTOR

LEFT REAR POWER WINDOW MOTOR - BLACK 2 WAY

CAV	CIRCUIT	FUNCTION
1	Q23 14RD/DG	LEFT REAR WINDOW DRIVER (DOWN)
2	Q13 14DB/GY (POWER LOCKS)	LEFT REAR WINDOW DRIVER (UP)
2	Q13 14DB (EXCEPT POWER LOCKS)	LEFT REAR WINDOW DRIVER (UP)

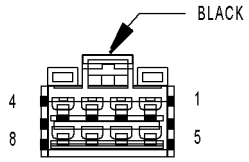

LEFT REAR POWER WINDOW SWITCH

LEFT REAR POWER WINDOW SWITCH - BLACK 8 WAY

CAV	CIRCUIT	FUNCTION
1	-	-
2	Q17 14DB/WT	MASTER LEFT REAR WINDOW DRIVER (UP)
3	Q27 14RD/BK	MASTER LEFT REAR WINDOW DRIVER (DOWN)
4	Q1 14YL	WINDOW SWITCH SUPPLY
5	Q13 14DB	LEFT REAR WINDOW DRIVER (UP)
6	Q1 14YL	WINDOW SWITCH SUPPLY
7	Z1 14BK	GROUND
8	Q23 14RD/WT	LEFT REAR WINDOW DRIVER (DOWN)

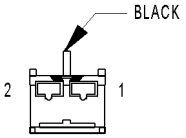

LEFT REAR SPEAKER

LEFT REAR SPEAKER - BLACK 2 WAY

CAV	CIRCUIT	FUNCTION
1	X57 18BR/LB	LEFT REAR SPEAKER (-)
2	X51 18BR/YL	LEFT REAR SPEAKER (+)

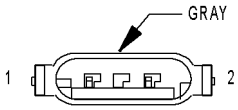

LEFT REAR TURN SIGNAL LAMP

LEFT REAR TURN SIGNAL LAMP - GRAY 2 WAY

CAV	CIRCUIT	FUNCTION
1	L63 18DG/RD	LEFT REAR TURN SIGNAL
2	Z1 18BK	GROUND

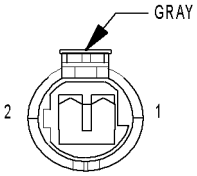

LEFT REAR WHEEL SPEED SENSOR

LEFT REAR WHEEL SPEED SENSOR - (SENSOR SIDE) 2 WAY

CAV	CIRCUIT	FUNCTION
1	LG	LEFT REAR WHEEL SPEED SENSOR 12V SUPPLY
2	LG/DB	LEFT REAR WHEEL SPEED SENSOR SIGNAL

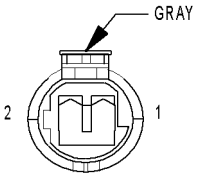

LEFT REAR WHEEL SPEED SENSOR

LEFT REAR WHEEL SPEED SENSOR - GRAY 2 WAY

CAV	CIRCUIT	FUNCTION
1	B4 20LG	LEFT REAR WHEEL SPEED SENSOR 12V SUPPLY
2	B3 20LG/DB	LEFT REAR WHEEL SPEED SENSOR SIGNAL

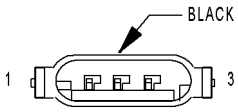

LEFT TAIL/ STOP LAMP

LEFT TAIL/STOP LAMP - BLACK 3 WAY

CAV	CIRCUIT	FUNCTION
1	L50 18WT/TN	BRAKE LAMP SWITCH OUTPUT
2	L7 18BK/YL	HEADLAMP SWITCH OUTPUT
3	Z1 18BK	GROUND

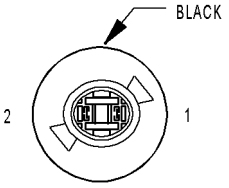

LEFT TURN SIGNAL INDICATOR

LEFT TURN SIGNAL INDICATOR - BLACK 2 WAY

CAV	CIRCUIT	FUNCTION
1	L61 20LG	LEFT TURN SIGNAL (IN)
2	Z1 20BK	GROUND

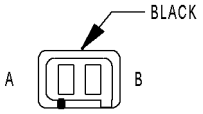

LEFT VISOR/ VANITY LAMP (LIGHT PACKAGE)

LEFT VISOR/VANITY LAMP (LIGHT PACKAGE) - BLACK 2 WAY

CAV	CIRCUIT	FUNCTION
A	M1 20PK	FUSED B(+)
B	Z1 20BK	GROUND

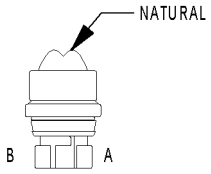

LICENSE LAMP (EXCEPT EXPORT)

LICENSE LAMP (EXCEPT EXPORT) - NATURAL 2 WAY

CAV	CIRCUIT	FUNCTION
A	L7 18BK/YL	HEADLAMP SWITCH OUTPUT
B	Z1 18BK	GROUND

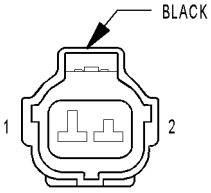

LIFTGATE AJAR SWITCH

LIFTGATE AJAR SWITCH - BLACK 2 WAY

CAV	CIRCUIT	FUNCTION
1	G78 20TN/BK	LIFTGATE AJAR SWITCH SENSE
2	Z1 20BK	GROUND

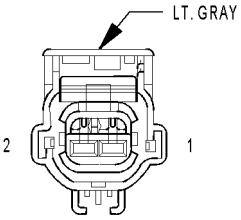

LIFTGATE CYLINDER LOCK SWITCH

LIFTGATE CYLINDER LOCK SWITCH - LT. GRAY 2 WAY

CAV	CIRCUIT	FUNCTION
1	P96 20WT/LG	RIGHT DOOR SWITCH MUX
2	Z1 20BK	GROUND

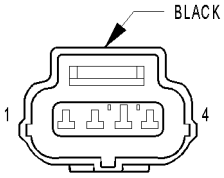

LIFTGATE POWER LOCK MOTOR

LIFTGATE POWER LOCK MOTOR - BLACK 4 WAY

CAV	CIRCUIT	FUNCTION
1	P35 18OR/VT	DOOR LOCK RELAY OUTPUT
2	P36 18PK/VT	DOOR UNLOCK RELAY OUTPUT
3	-	-
4	-	-

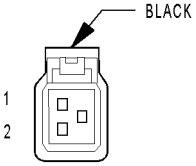

LOW NOTE HORN

LOW NOTE HORN - BLACK 2 WAY

CAV	CIRCUIT	FUNCTION
1	X2 20DG/RD	HORN RELAY OUTPUT
2	Z1 20BK	GROUND

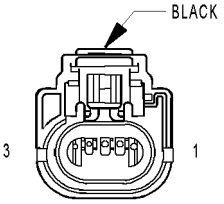

MANIFOLD ABSOLUTE PRESSURE SENSOR (GAS)

MANIFOLD ABSOLUTE PRESSURE SENSOR (GAS) - BLACK 3 WAY

CAV	CIRCUIT	FUNCTION
1	K1 20DG/RD (1.6L)	MANIFOLD ABSOLUTE PRESSURE SENSOR SIGNAL
1	K1 20DG/RD (EXCEPT 1.6L)	MAP SIGNAL
2	K901 20DB/VT (1.6L)	MANIFOLD ABSOLUTE PRESSURE SENSOR GROUND
2	K4 20BK/LB (EXCEPT 1.6L)	SENSOR GROUND 1
3	K6 18VT/WT (1.6L)	MANIFOLD ABSOLUTE PRESSURE SENSOR 5V SUPPLY
3	K7 20OR (EXCEPT 1.6L)	5 VOLT SUPPLY

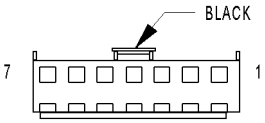

MAP/ READING LAMPS

MAP/READING LAMPS - BLACK 7 WAY

CAV	CIRCUIT	FUNCTION
1	-	-
2	Z1 20BK	GROUND
3	-	-
4	-	-
5	-	-
6	-	-
7	F10 20BK/YL	FUSED B(+)

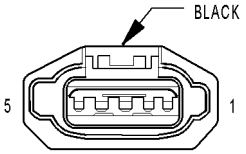

MASS AIR FLOW SENSOR (DIESEL)

MASS AIR FLOW SENSOR (DIESEL) - BLACK 5 WAY

CAV	CIRCUIT	FUNCTION
1	K21 20YL/LG	AMBIENT AIR TEMPERATURE SENSOR SIGNAL
2	A142 20RD/LG	AUTOMATIC SHUT DOWN RELAY OUTPUT
3	K957 20BR	MASS AIR FLOW SENSOR GROUND
4	F859 20LG/PK	SENSOR REFERENCE VOLTAGE A
5	K155 20YL/WT	MASS AIR FLOW SENSOR SIGNAL

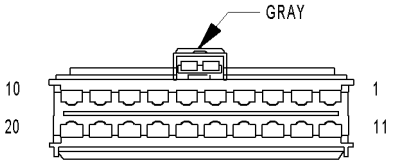

MULTI-FUNCTION SWITCH

MULTI-FUNCTION SWITCH - GRAY 20 WAY

CAV	CIRCUIT	FUNCTION
1	-	-
2	L61 18LG	LEFT TURN SIGNAL
2	L61 20LG (EXCEPT EXPORT)	LEFT TURN SIGNAL
3	L6 18RD/WT	FUSED IGNITION SWITCH OUTPUT (RUN-ACC)
4	L63 18DG/RD	LEFT REAR TURN SIGNAL
4	L61 18LG (EXPORT)	LEFT TURN SIGNAL
5	L62 18BR/RD	RIGHT REAR TURN SIGNAL
5	L60 18TN (EXPORT)	RIGHT TURN SIGNAL
6	L60 18TN	RIGHT TURN SIGNAL
6	L60 20TN (EXCEPT EXPORT)	RIGHT TURN SIGNAL
7	Z2 18BK/LG	GROUND
8	E19 20RD	PANEL LAMPS DIMMER SIGNAL
9	L7 18BK/YL	HEADLAMP SWITCH OUTPUT
10	-	-
11	A15 18PK/DG	FUSED B(+)
12	L38 18BR/WT (EXPORT)	REAR FOG LAMP SWITCH OUTPUT
12	L38 18BR/WT (EXPORT)	REAR FOG LAMP SWITCH OUTPUT
13	F39 18PK/LG	FUSED HEADLAMP RELAY OUTPUT
14	L39 18LB (FOG LAMPS)	FOG LAMP SWITCH OUTPUT
14	L39 18LB (FOG LAMPS)	FOG LAMP SWITCH OUTPUT
15	-	-
16	L4 16VT/WT	DIMMER SWITCH LOW BEAM OUTPUT
17	L3 16RD/OR	DIMMER SWITCH HIGH BEAM OUTPUT
18	F3 12LB/OR	FUSED B(+)
19	F3 12LB/OR	FUSED B(+)
20	F33 18PK/RD	FUSED B(+)

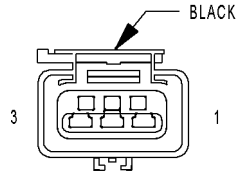

NATURAL VACUUM LEAK DETECTION ASSEMBLY (EXCEPT EXPORT)

NATURAL VACUUM LEAK DETECTION ASSEMBLY (EXCEPT EXPORT) - BLACK 3 WAY

CAV	CIRCUIT	FUNCTION
1	Z1 20BK	GROUND
2	K107 20OR/YL	NVLD SWITCH SIGNAL
3	K106 20WT/DG	NVLD SOL CONTROL

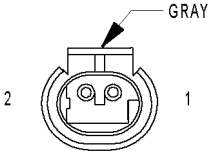

OUTPUT SPEED SENSOR

OUTPUT SPEED SENSOR - GRAY 2 WAY

CAV	CIRCUIT	FUNCTION
1	T13 20DB/BK	SPEED SENSOR GROUND
2	T14 20LG/WT	OUTPUT SPEED SENSOR SIGNAL

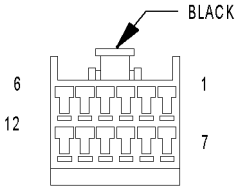

OVERHEAD CONSOLE MODULE

OVERHEAD CONSOLE MODULE - BLACK 12 WAY

CAV	CIRCUIT	FUNCTION
1	Q41 20WT (POWER SUNROOF)	SUNROOF OPEN
2	Q44 20BR (POWER SUNROOF)	SUNROOF SWITCH GROUND
3	M2 20YL	COURTESY LAMPS DRIVER
4	M1 20PK	FUSED B(+)
5	G31 20VT/LG	AMBIENT TEMPERATURE SENSOR SIGNAL
6	F10 20YL/RD	FUSED IGNITION SWITCH OUTPUT (RUN-ACC)
7	Q43 20VT (POWER SUNROOF)	SUNROOF VENT
8	Q42 20LB (POWER SUNROOF)	SUNROOF CLOSE
9	Z1 20BK	GROUND
10	E2 20OR	PANEL LAMPS DRIVER
11	G32 20BK/LB	SENSOR GROUND
12	Z2 20BK/LG	GROUND

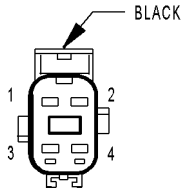

OXYGEN SENSOR 1/1 UPSTREAM (GAS)

OXYGEN SENSOR 1/1 UPSTREAM (GAS) - BLACK 4 WAY

CAV	CIRCUIT	FUNCTION
1	A142 18DG/OR (1.6L)	AUTOMATIC SHUT DOWN RELAY OUTPUT
1	Z1 18BK (EXCEPT 1.6L)	GROUND
2	K79 18OR/RD (1.6L)	OXYGEN SENSOR 1/1 CONTROL
2	K99 18BR/OR (EXCEPT 1.6L)	O2 1/1 HEATER CONTROL
3	K904 20DB/DG (EXCEPT 1.6L)	O2 RETURN
3	K902 20BR/DG (1.6L)	OXYGEN SENSOR 1/1 GROUND
4	K41 20BK/DG (EXCEPT 1.6L)	O2 1/1 SIGNAL
4	K41 20BK/DG (1.6L)	OXYGEN SENSOR 1/1 SIGNAL

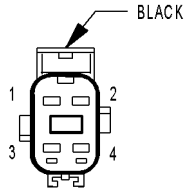

OXYGEN SENSOR 1/2 DOWNSTREAM (GAS)

OXYGEN SENSOR 1/2 DOWNSTREAM (GAS) - BLACK 4 WAY

CAV	CIRCUIT	FUNCTION
1	Z1 18BK (EXCEPT 1.6L)	GROUND
1	K199 18BR/VT (1.6L)	OXYGEN SENSOR 1/2 CONTROL
2	K199 18BR/VT (EXCEPT 1.6L)	O2 1/2 HEATER CONTROL
2	A142 18DG/OR (1.6L)	AUTOMATIC SHUT DOWN RELAY OUTPUT
3	K904 20DB/DG (1.6L)	OXYGEN SENSOR 1/2 GROUND
3	K904 20DB/DG (EXCEPT 1.6L)	O2 RETURN
4	K141 20TN/WT (EXCEPT 1.6L)	O2 1/2 SIGNAL
4	K141 20TN/WT (1.6L)	OXYGEN SENSOR 1/2 SIGNAL

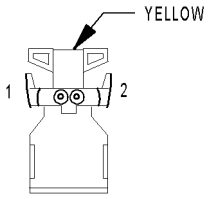

PASSENGER AIRBAG SQUIB 1

PASSENGER AIRBAG SQUIB 1 - YELLOW 2 WAY

CAV	CIRCUIT	FUNCTION
1	R44 20DG/YL	PASSENGER SQUIB 1 LINE 2
2	R42 20BK/YL	PASSENGER SQUIB 1 LINE 1

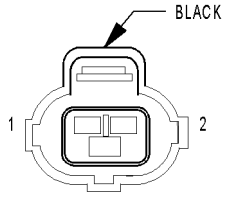

PASSENGER DOOR AJAR SWITCH

PASSENGER DOOR AJAR SWITCH - BLACK 2 WAY

CAV	CIRCUIT	FUNCTION
1	G75 20TN/DB (LHD)	PASSENGER DOOR AJAR SWITCH SENSE
1	G74 20TN/DB (RHD)	PASSENGER DOOR AJAR SWITCH SENSE
2	Z1 20BK	GROUND

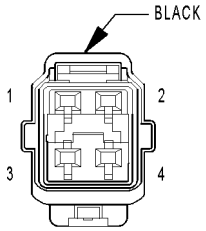

PASSENGER DOOR POWER LOCK MOTOR/ AJAR SWITCH

PASSENGER DOOR POWER LOCK MOTOR/AJAR SWITCH - BLACK 4 WAY

CAV	CIRCUIT	FUNCTION
1	G74 20TN/DB (LHD)	RIGHT FRONT DOOR AJAR SWITCH SENSE
1	G75 20TN/DB (RHD)	LEFT FRONT DOOR AJAR SWITCH SENSE
2	Z1 20BK	GROUND
3	P36 20PK/BK	DOOR UNLOCK RELAY OUTPUT
4	P35 20OR/BK	DOOR LOCK RELAY OUTPUT

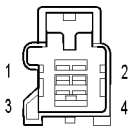

PASSENGER HEATED SEAT CUSHION

PASSENGER HEATED SEAT CUSHION - 4 WAY

CAV	CIRCUIT	FUNCTION
1	Z122 18BK	GROUND
2	P130 18RD/TN	PASSENGER SEAT HEATER CUSHION DRIVER
3	P141 20TN/DB	SEAT TEMPERATURE SENSOR 5V SUPPLY
4	P144 20BK/LG	PASSENGER SEAT TEMPERATURE SENSOR RETURN

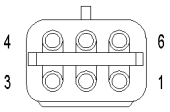

PASSENGER HEATED SEAT SWITCH

PASSENGER HEATED SEAT SWITCH - 6 WAY

CAV	CIRCUIT	FUNCTION
1	P138 20VT/LG	PASSENGER SEAT LOW HEAT LED DRIVER
2	-	-
3	Z122 18BK	GROUND
4	F98 18RD/WT	HEATED SEAT RELAY OUTPUT
5	P140 20VT/BK	PASSENGER SEAT HIGH HEAT LED DRIVER
6	P8 20LB/WT	PASSENGER HEATED SEAT SWITCH

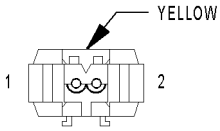

PASSENGER SEAT AIRBAG SQUIB

PASSENGER SEAT AIRBAG SQUIB - YELLOW 2 WAY

CAV	CIRCUIT	FUNCTION
1	R34 18WT	PASSENGER SEAT SQUIB 1 LINE 2
2	R32 18OR	PASSENGER SEAT SQUIB 1 LINE 1

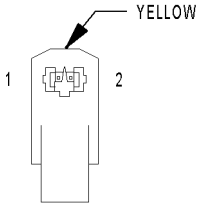

PASSENGER SEAT BELT TENSIONER

PASSENGER SEAT BELT TENSIONER - YELLOW 2 WAY

CAV	CIRCUIT	FUNCTION
1	R54 20LB/YL	PASSENGER SEAT BELT TENSIONER LINE 2
2	R56 20LB/DG	PASSENGER SEAT BELT TENSIONER LINE 1

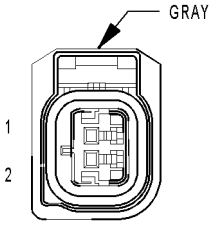

PASSENGER SIDE IMPACT SENSOR 1

PASSENGER SIDE IMPACT SENSOR 1 - GRAY 2 WAY

CAV	CIRCUIT	FUNCTION
1	R134 18LB/BR	PASSENGER SIDE IMPACT SENSOR 1 GROUND
2	R132 18LG/VT	PASSENGER SIDE IMPACT SENSOR 1 SIGNAL

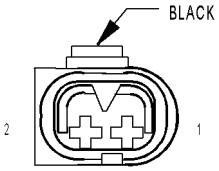

PCV HEATER (DIESEL)

PCV HEATER (DIESEL) - BLACK 2 WAY

CAV	CIRCUIT	FUNCTION
1	A141 18DG/WT	FUEL PUMP RELAY OUTPUT
2	Z1 18BK	GROUND

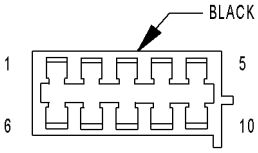

POWER MIRROR SWITCH (LHD)

POWER MIRROR SWITCH (LHD) - BLACK 10 WAY

CAV	CIRCUIT	FUNCTION
1	P73 20YL/PK	LEFT MIRROR RIGHT/DOWN MOVEMENT
2	P74 20DB/WT	RIGHT MIRROR LEFT MOVEMENT
3	Z1 20BK	GROUND
4	P71 20YL/BK	LEFT MIRROR UP MOVEMENT
5	-	-
6	L7 20BK/YL	HEADLAMP SWITCH OUTPUT
7	M1 18PK	FUSED B(+)
8	P75 20DB/WT	LEFT MIRROR LEFT MOVEMENT
9	P72 20YL	RIGHT MIRROR UP MOVEMENT
10	P70 20PK	RIGHT MIRROR RIGHT/DOWN MOVEMENT

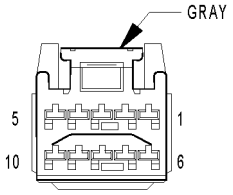

POWER MIRROR SWITCH (RHD)

POWER MIRROR SWITCH (RHD) - GRAY 10 WAY

CAV	CIRCUIT	FUNCTION
1	M1 18PK	FUSED B(+)
2	P159 20DG/WT	MIRROR UNFOLD
3	P76 20YL/PK	LEFT/RIGHT MIRROR RIGHT/DOWN MOVEMENT
4	P75 20DB/WT	LEFT MIRROR LEFT MOVEMENT
5	P71 20YL/BK	LEFT MIRROR UP MOVEMENT
6	P160 20LB/BK	MIRROR FOLD
7	Z1 20BK	GROUND
8	L7 20BK/YL	HEADLAMP SWITCH OUTPUT
9	P74 20DB/WT	RIGHT MIRROR LEFT MOVEMENT
10	P72 20YL	RIGHT MIRROR UP MOVEMENT

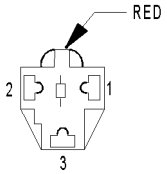

POWER OUTLET

POWER OUTLET - RED 3 WAY

CAV	CIRCUIT	FUNCTION
1	F1 16DB/BK	FUSED B(+)
2	-	-
3	Z1 16BK	GROUND

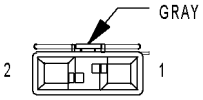

POWER SEAT MOTOR

POWER SEAT MOTOR - GRAY 2 WAY

CAV	CIRCUIT	FUNCTION
1	P121 16RD/LG (RHD)	SEAT DOWN DRIVER
1	P120 16LG/YL (LHD)	SEAT UP DRIVER
2	P120 16LG/YL (RHD)	SEAT UP DRIVER
2	P121 16RD/LG (LHD)	SEAT DOWN DRIVER

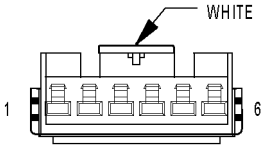

POWER SEAT SWITCH

POWER SEAT SWITCH - WHITE 6 WAY

CAV	CIRCUIT	FUNCTION
1	-	-
2	Z121 18BK (HEATED SEAT)	GROUND
2	Z1 16 BK (BASE)	GROUND
3	P120 16LG/YL	SEAT UP DRIVER
4	P121 16RD/LG (BASE)	SEAT DOWN DRIVER
4	P121 16LG/OR (HEATED SEAT)	SEAT DOWN DRIVER
5	Z1 16 BK (BASE)	GROUND
5	Z121 18BK (HEATED SEAT)	GROUND
6	A120 16RD/LG	FUSED B(+)

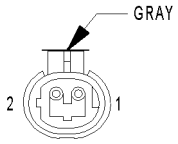

POWER STEERING PRESSURE SWITCH (GAS)

POWER STEERING PRESSURE SWITCH (GAS) - GRAY 2 WAY

CAV	CIRCUIT	FUNCTION
1	K10 20DB/OR (1.6L)	STEERING PRESSURE SWITCH SIGNAL
1	K10 20DB/OR (EXCEPT 1.6L)	PSP SWITCH SIGNAL
2	Z1 20BK	GROUND

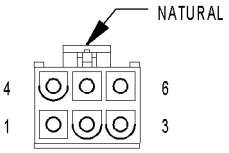

POWER SUNROOF MODULE C1

POWER SUNROOF MODULE C1 - NATURAL 6 WAY

CAV	CIRCUIT	FUNCTION
1	-	-
2	L4 20WT	SUNROOF OPEN
3	-	-
4	L1 20VT	SUNROOF VENT
5	L2 20BR	SUNROOF SWITCH GROUND
6	L3 20LB	SUNROOF CLOSE

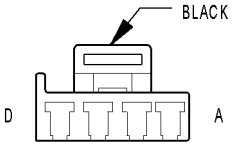

POWER SUNROOF MODULE C2

POWER SUNROOF MODULE C2 - BLACK 4 WAY

CAV	CIRCUIT	FUNCTION
A	L5 14YL/RD	FUSED IGNITION SWITCH OUTPUT (RUN-ACC)
B	L7 14DB	MOTOR TILT DOWN FEED
C	L6 14DG	MOTOR TILT UP FEED
D	Z1 14BK/VT	GROUND

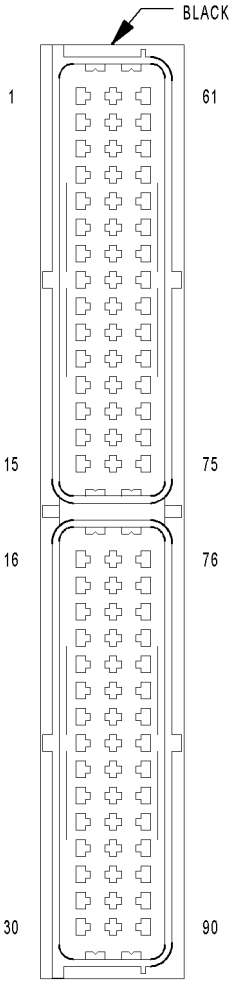

POWERTRAIN CONTROL MODULE (1.6L)

POWERTRAIN CONTROL MODULE (1.6L) - BLACK 90 WAY

CAV	CIRCUIT	FUNCTION
1	A14 18GY/WT	FUSED B(+)
2	-	-
3	-	-
4	-	-
5	C28 20DB/OR	A/C COMPRESSOR CLUTCH RELAY CONTROL
6	D25 20VT/YL	PCI BUS
7	K81 20DB/DG	ACCELERATOR PEDAL POSITION SENSOR NO. 2 SIGNAL
8	C22 20BR/WT	A/C HIGH PRESSURE SIGNAL
9	K921 20RD	INLET AIR TEMPERATURE SENSOR GROUND
10	N907 20BR/OR	VEHICLE SPEED SENSOR GROUND
11	K901 20DB/VT	MANIFOLD ABSOLUTE PRESSURE SENSOR GROUND
12	F858 20DG/LG	ACCELERATOR PEDAL POSITION SENSOR NO. 1 5V SUPPLY
13	F859 20DG/PK	ACCELERATOR PEDAL POSITION SENSOR NO. 2 5V SUPPLY
14	F855 20OR/PK	THROTTLE POSITION SENSOR 5V SUPPLY
15	-	-
16	K1 20DG/RD	MANIFOLD ABSOLUTE PRESSURE SENSOR SIGNAL
17	K2 20TN/BK	ENGINE COOLANT TEMPERATURE SENSOR SIGNAL
18	K41 20BK/DG	OXYGEN SENSOR 1/1 SIGNAL
19	K167 20BR/YL	ACCELERATOR PEDAL POSITION SENSOR NO. 1 GROUND
20	K42 20DB/LG	KNOCK SENSOR SIGNAL
21	K24 20GY/BK	CRANKSHAFT POSITION SENSOR SIGNAL
22	K981 20BR/DG	ACCELERATOR PEDAL POSITION SENSOR NO. 2 GROUND
23	K922 20DB/OR	THROTTLE POSITION SENSOR GROUND
24	K902 20BR/DG	OXYGEN SENSOR 1/1 GROUND
25	K924 20BR/WT	CRANKSHAFT POSITION SENSOR GROUND
26	K45 20BK/VT	KNOCK SENSOR GROUND
27	-	-
28	Z12 18BK/TN	GROUND
29	Z12 18BK/TN	GROUND
30	K17 18DB/TN	IGNITION COIL NO. 2 DRIVER
31	V50 20VT/OR	ELECTRONIC THROTTLE CONTROL POSITIVE MOTOR CONTROL
32	V51 20WT	ELECTRONIC THROTTLE CONTROL NEGATIVE MOTOR CONTROL
33	K4 20BK/LB	ENGINE COOLANT TEMPERATURE SENSOR GROUND
34	K51 20DB/YL	AUTOMATIC SHUT DOWN RELAY CONTROL
35	K90 20TN	STARTER MOTOR RELAY CONTROL
36	C24 20YL/RD	LOW SPEED RADIATOR FAN RELAY CONTROL
37	-	-
38	-	-
39	K10 20DB/OR	STEERING PRESSURE SWITCH SIGNAL

POWERTRAIN CONTROL MODULE (1.6L) - BLACK 90 WAY

CAV	CIRCUIT	FUNCTION
40	G9 20GY/BK	RED BRAKE WARNING INDICATOR DRIVER
41	D20 20LG	SCI RECEIVE (PCM)
42	K944 20BR/GY	CAMSHAFT POSITION SENSOR GROUND
43	F854 20GY/PK	CAMSHAFT POSITION SENSOR 5V SUPPLY
44	K7 20OR	CRANKSHAFT POSITION SENSOR 5V SUPPLY
45	F857 20OR/PK	VEHICLE SPEED SENSOR 5V SUPPLY
46	K22 20OR/DB	THROTTLE POSITION SENSOR SIGNAL NO. 1
47	K141 20TN/WT	OXYGEN SENSOR 1/2 SIGNAL
48	-	-
49	K44 20TN/YL	CAMSHAFT POSITION SENSOR SIGNAL
50	G6 20GY	ENGINE OIL PRESSURE SWITCH SIGNAL
51	-	-
52	-	-
53	K904 20DB/DG	OXYGEN SENSOR 1/2 GROUND
54	K11 18WT/DB	FUEL INJECTOR NO. 1 DRIVER
55	K52 20PK/BK	EVAP/PURGE SOLENOID CONTROL
56	-	-
57	-	-
58	-	-
59	Z12 18BK/TN	GROUND
60	K19 18BK/GY	IGNITION COIL NO. 1 DRIVER
61	F12 20DB/WT	FUSED IGNITION SWITCH OUTPUT (RUN-START)
62	-	-
63	-	-
64	-	-
65	C27 20DB/PK	HIGH SPEED RADIATOR FAN RELAY CONTROL
66	K31 20BR	FUEL PUMP RELAY CONTROL
67	-	-
68	L50 18WT/TN	BRAKE LAMP SWITCH OUTPUT
69	K119 18LG/BK	CLUTCH UPSTOP SWITCH SIGNAL
70	T141 20YL/RD	CLUTCH INTERLOCK SWITCH SIGNAL
71	K29 20WT/PK	BRAKE LAMP SWITCH SIGNAL
72	K21 20BK/RD	INLET AIR TEMPERATURE SENSOR SIGNAL
73	D21 20PK	SCI TRANSMIT (PCM)
74	K80 20BK/LG	ACCELERATOR PEDAL POSITION SENSOR NO. 1 SIGNAL
75	K6 18VT/WT	MANIFOLD ABSOLUTE PRESSURE SENSOR 5V SUPPLY
76	V37 20RD/LG	SPEED CONTROL SWITCH SIGNAL
77	K122 20DB/GY	THROTTLE POSITION SENSOR SIGNAL NO. 2
78	-	-
79	G7 20WT/OR	VEHICLE SPEED SENSOR SIGNAL
80	-	-
81	K79 18OR/RD	OXYGEN SENSOR 1/1 CONTROL
82	K12 18TN	FUEL INJECTOR NO. 2 DRIVER
83	K13 18YL/WT	FUEL INJECTOR NO. 3 DRIVER
84	K14 18LB/BR	FUEL INJECTOR NO. 4 DRIVER
85	K199 18BR/VT	OXYGEN SENSOR 1/2 CONTROL
86	-	-
87	-	-
88	A142 18DG/OR	AUTOMATIC SHUT DOWN RELAY OUTPUT
89	K20 18DG	GENERATOR FIELD CONTROL
90	Z12 18BK/TN	GROUND

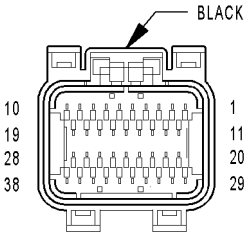

POWERTRAIN CONTROL MODULE C1 (NGC)

POWERTRAIN CONTROL MODULE C1 (NGC) - BLACK 38 WAY

CAV	CIRCUIT	FUNCTION
1	-	-
2	-	-
3	-	-
4	-	-
5	-	-
6	-	-
7	-	-
8	-	-
9	Z12 16BK/TN	GROUND
10	-	-
11	F12 20DB/WT	FUSED IGNITION SWITCH OUTPUT (RUN-START)
12	F11 20RD/WT (AUTOSTICK)	FUSED IGNITION SWITCH OUTPUT (UNLOCK-RUN-START)
12	F12 20DB/WT (EXCEPT AUTOSTICK)	FUSED IGNITION SWITCH OUTPUT (RUN-START)
13	G7 20WT/OR (MTX)	VEHICLE SPEED SIGNAL
14	G9 20GY/BK	RED BRAKE WARNING INDICATOR DRIVER
15	K55 18LB (2.4L TURBO)	TIP SOL CONTROL
16	-	-
17	K150 18DB/YL (2.4L TURBO)	SURGE SOL CONTROL
18	Z12 16BK/TN	GROUND
19	-	-
20	G6 20GY	OIL PRESSURE SIGNAL
21	-	-
22	K145 20BR/OR	AAT SIGNAL
23	K153 20DB/LG (2.4L TURBO)	TIP SIGNAL
24	-	-
25	D20 20LG	SCI RECEIVE (PCM)
26	D6 20PK/LB (EATX)	SCI RECEIVE (TCM)
27	K6 20VT/WT (2.4L TURBO)	5 VOLT SUPPLY
28	K137 18DB/GY (2.4L TURBO)	WASTEGATE SOL CONTROL
29	A14 16RD/WT	FUSED B(+)
30	A41 16YL	FUSED IGNITION SWITCH OUTPUT (START)
31	-	-
32	-	-
33	-	-
34	-	-
35	-	-
36	D21 20PK	SCI TRANSMIT (PCM)
37	D15 20WT/DG (EATX)	SCI TRANSMIT (TCM)
38	D25 18VT/YL (2.0L/2.4L EXCEPT TURBO)	PCI BUS
38	D25 20VT/YL (2.4L TURBO)	PCI BUS

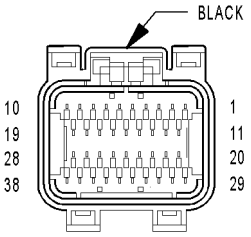

POWERTRAIN CONTROL MODULE C2 (NGC)

POWERTRAIN CONTROL MODULE C2 (NGC) - BLACK 38 WAY

CAV	CIRCUIT	FUNCTION
1	-	-
2	-	-
3	-	-
4	-	-
5	-	-
6	-	-
7	-	-
8	-	-
9	K17 18DB/TN	COIL CONTROL NO. 2
10	K19 18BK/GY	COIL CONTROL NO. 1
11	K14 18LB/BR	INJECTOR CONTROL NO. 4
12	K13 18YL/WT	INJECTOR CONTROL NO. 3
13	K12 18TN	INJECTOR CONTROL NO. 2
14	K11 18WT/DB	INJECTOR CONTROL NO. 1
15	-	-
16	-	-
17	K199 18BR/VT	O2 1/2 HEATER CONTROL
18	K99 18BR/OR	O2 1/1 HEATER CONTROL
19	K20 18DG (EXCEPT 2.4L TURBO MTX)	GEN FIELD CONTROL
19	K20 20DG (2.4L TURBO MTX)	GEN FIELD CONTROL
20	K2 20TN/BK	ECT SIGNAL
21	K22 20OR/DB	TP SIGNAL
22	-	-
23	K1 20DG/RD	MAP SIGNAL
24	K45 20BK/VT	KS RETURN
25	K42 20DB/LG	KS SIGNAL
26	-	-
27	K4 18BK/LB	SENSOR GROUND 1
28	K961 18BR/VT	IAC RETURN
29	K7 20OR	5 VOLT SUPPLY
30	K21 20BK/RD	IAT SIGNAL
31	K41 20BK/DG	O2 1/1 SIGNAL
32	K904 18DB/DG	O2 RETURN
33	K141 20TN/WT	O2 1/2 SIGNAL
34	K44 20TN/YL	CMP SIGNAL
35	K24 20GY/BK	CKP SIGNAL
36	-	-
37	-	-
38	K610 18VT/GY	IAC MOTOR CONTROL

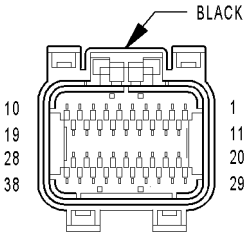

POWERTRAIN CONTROL MODULE C3 (NGC)

POWERTRAIN CONTROL MODULE C3 (NGC) - BLACK 38 WAY

CAV	CIRCUIT	FUNCTION
1	-	-
2	-	-
3	K51 20DB/YL	AUTOMATIC SHUT DOWN RELAY CONTROL
4	C27 20DB/PK (EXCEPT 2.4L TURBO)	HIGH SPEED RAD FAN RELAY CONTROL
5	V35 20LG/RD (SPEED CONTROL)	S/C VENT CONTROL
6	C24 20DB/PK (2.0L RHD MTX)	LOW SPEED RAD FAN RELAY CONTROL
6	C24 20DB/WT (OTHER)	LOW SPEED RAD FAN RELAY CONTROL
6	N23 20DB/DG (2.4L TURBO)	RADIATOR FAN MOTOR CONTROL
7	V32 20YL/RD	S/C SUPPLY
8	K106 18WT/DG	NVLD SOL CONTROL
9	-	-
10	-	-
11	C28 20DB/OR	A/C CLUTCH RELAY CONTROL
12	V36 20TN/RD (SPEED CONTROL)	S/C VACUUM CONTROL
13	-	-
14	-	-
15	-	-
16	-	-
17	K167 20BR/YL	SENSOR GROUND 2
18	-	-
19	A142 16DG/OR	AUTOMATIC SHUT DOWN RELAY OUTPUT
20	K52 20PK/BK	EVAP PURGE CONTROL
21	T141 20YL/RD (MTX EXCEPT 2.4L TURBO)	CLUTCH INTERLOCK SWITCH SIGNAL
21	T141 18YL/RD (MTX 2.4L TURBO)	CLUTCH INTERLOCK SWITCH SIGNAL
22	-	-
23	K29 20WT/PK	BRAKE SWITCH SIGNAL
24	C22 20BR/WT (EXCEPT 2.4L TURBO)	A/C HIGH PRESSURE SIGNAL
24	C21 20DB/WT (2.4L TURBO)	A/C LOW PRESSURE SIGNAL
25	-	-
26	T44 18YL (AUTOSTICK 2.0L RHD/2.4L TURBO)	AUTOSTICK DOWNSHIFT SWITCH SIGNAL
26	T44 18YL/LB (AUTOSTICK 2.0L LHD/2.4L EXCEPT TURBO)	AUTOSTICK DOWNSHIFT SWITCH SIGNAL
27	T5 20LG (AUTOSTICK 2.0L RHD/2.4L TURBO)	AUTOSTICK UPSHIFT SWITCH SIGNAL
27	T5 20LG/LB (AUTOSTICK 2.0L LHD/2.4L EXCEPT TURBO)	AUTOSTICK UPSHIFT SWITCH SIGNAL
28	A142 16DG/OR	AUTOMATIC SHUT DOWN RELAY OUTPUT
29	K108 20WT/TN	EVAP PURGE SIGNAL
30	K10 20DB/OR	PSP SWITCH SIGNAL
31	C18 20DB (2.4L TURBO)	A/C PRESSURE TRANSDUCER SIGNAL
32	K118 20PK/YL	BATTERY TEMP SIGNAL
33	-	-
34	V37 20RD/LG	S/C SWITCH SIGNAL
35	K107 18OR/YL	NVLD SWITCH SIGNAL
36	-	-
37	K31 20BR	FUEL PUMP RELAY CONTROL
38	K90 20TN	STARTER RELAY CONTROL

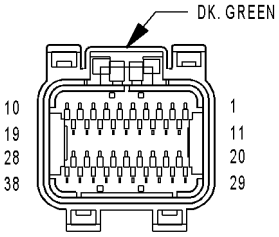

POWERTRAIN CONTROL MODULE C4 (NGC) (EATX)

POWERTRAIN CONTROL MODULE C4 (NGC) (EATX) - DK. GREEN 38 WAY

CAV	CIRCUIT	FUNCTION
1	T60 18BR	OVERDRIVE SOLENOID CONTROL
2	T59 18PK (2.0L/2.4L EXCEPT TURBO)	UNDERDRIVE SOLENOID CONTROL
2	T59 18PK/BK (2.4L TURBO)	UNDERDRIVE SOLENOID CONTROL
3	-	-
4	-	-
5	-	-
6	T19 18WT	2-4 SOLENOID CONTROL
7	-	-
8	-	-
9	-	-
10	T20 18LB	LOW/REVERSE SOLENOID CONTROL
11	-	-
12	Z14 16BK/YL	GROUND
13	-	-
14	Z13 16BK/RD	GROUND
15	T1 20LG/BK	TRS T1 SENSE
16	T3 20VT	TRS T3 SENSE
17	-	-
18	T15 20LG	TRANSMISSION CONTROL RELAY CONTROL
19	T16 16RD	TRANSMISSION CONTROL RELAY OUTPUT
20	-	-
21	-	-
22	T9 18OR/BK	OVERDRIVE PRESSURE SWITCH SENSE
23	-	-
24	-	-
25	-	-
26	-	-
27	T41 20BK/WT	TRS T41 SENSE
28	T16 16RD	TRANSMISSION CONTROL RELAY OUTPUT
29	T50 18DG	LOW/REVERSE PRESSURE SWITCH SENSE
30	T47 18YL/BK	2-4 PRESSURE SWITCH SENSE
31	-	-
32	T14 20LG/WT	OUTPUT SPEED SENSOR SIGNAL
33	T52 20RD/BK	INPUT SPEED SENSOR SIGNAL
34	T13 20DB/BK	SPEED SENSOR GROUND
35	T54 20VT/PK	TRANSMISSION TEMPERATURE SENSOR SIGNAL
36	-	-
37	T42 20VT/WT	TRS T42 SENSE
38	-	-

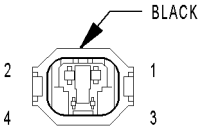

RADIATOR FAN MOTOR (2.4L TURBO)

RADIATOR FAN MOTOR (2.4L TURBO) - BLACK 4 WAY

CAV	CIRCUIT	FUNCTION
1	Z1 10BK	GROUND
2	A110 10VT/RD	FUSED B(+)
3	A142 16DG/OR	AUTOMATIC SHUT DOWN RELAY OUTPUT
4	N23 20DB/DG	RADIATOR FAN MOTOR CONTROL

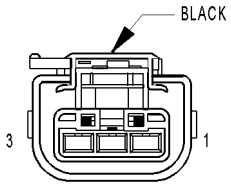

RADIATOR FAN MOTOR (EXCEPT 2.4L TURBO)

RADIATOR FAN MOTOR (EXCEPT 2.4L TURBO) - BLACK 3 WAY

CAV	CIRCUIT	FUNCTION
1	C23 12DG	LOW SPEED RADIATOR FAN RELAY OUTPUT
2	Z1 12BK	GROUND
3	C25 12YL	HIGH SPEED RADIATOR FAN RELAY OUTPUT

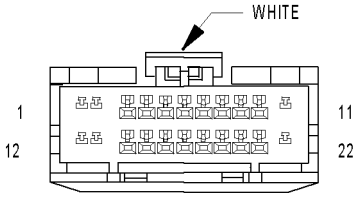

RADIO

RADIO - WHITE 22 WAY

CAV	CIRCUIT	FUNCTION
1	M11 16PK/LB	FUSED B(+) (I.O.D.)
2	X12 20RD/WT	FUSED IGNITION SWITCH OUTPUT (RUN-ACC)
3	E2 20OR	PANEL LAMPS DRIVER
4	-	-
5	-	-
6	-	-
7	X54 18VT	RIGHT FRONT SPEAKER (+)
8	X56 18DB/RD	RIGHT FRONT SPEAKER (-)
9	X55 18BR/DB	LEFT FRONT SPEAKER (-)
10	X53 18DG	LEFT FRONT SPEAKER (+)
11	Z9 16BK	GROUND
12	M11 16PK/LB	FUSED B(+) (I.O.D.)
13	-	-
14	D25 20VT/YL	PCI BUS
15	-	-
16	-	-
17	-	-
18	X51 18BR/YL	LEFT REAR SPEAKER (+)
19	X57 18BR/LB	LEFT REAR SPEAKER (-)
20	X58 18DB/BK	RIGHT REAR SPEAKER (-)
21	X52 18DB/WT	RIGHT REAR SPEAKER (+)
22	Z9 16BK	GROUND

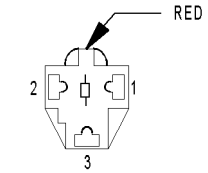

REAR POWER OUTLET

REAR POWER OUTLET - RED 3 WAY

CAV	CIRCUIT	FUNCTION
1	F30 16RD	FUSED IGNITION SWITCH OUTPUT (RUN-ACC)
2	-	-
3	Z1 16BK	GROUND

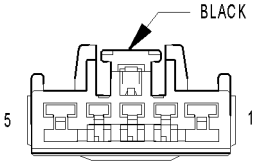

REAR WINDOW DEFOGGER SWITCH

REAR WINDOW DEFOGGER SWITCH - BLACK 5 WAY

CAV	CIRCUIT	FUNCTION
1	A4 12BK/PK	FUSED B(+)
2	F20 20WT	FUSED IGNITION SWITCH OUTPUT (RUN)
3	Z1 20BK	GROUND
4	E2 20OR	PANEL LAMPS DRIVER
5	C15 12BK/WT	REAR WINDOW DEFOGGER RELAY OUTPUT

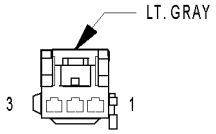

REAR WIPER MOTOR

REAR WIPER MOTOR - LT. GRAY 3 WAY

CAV	CIRCUIT	FUNCTION
1	Z1 18BK	GROUND
2	V23 18BR/PK	FUSED IGNITION SWITCH OUTPUT (RUN-ACC)
3	V13 18BR/LG	REAR WIPER MOTOR CONTROL

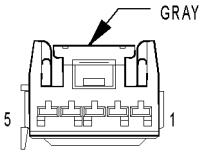

REAR WIPER SWITCH

REAR WIPER SWITCH - GRAY 5 WAY

CAV	CIRCUIT	FUNCTION
1	V20 18BK/WT	REAR WASHER MOTOR CONTROL
2	E2 20OR	PANEL LAMPS DRIVER
3	Z1 18BK	GROUND
4	V23 18BR/PK	FUSED IGNITION SWITCH OUTPUT (RUN-ACC)
5	V13 18BR/LG	REAR WIPER MOTOR CONTROL

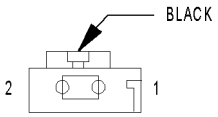

REMOTE KEYLESS ENTRY ANTENNA (JAPAN)

REMOTE KEYLESS ENTRY ANTENNA (JAPAN) - BLACK 2 WAY

CAV	CIRCUIT	FUNCTION
1	X161 20WT	RKE ANTENNA
2	X161 20WT	RKE ANTENNA

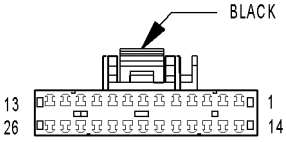

REMOTE KEYLESS ENTRY MODULE

REMOTE KEYLESS ENTRY MODULE - BLACK 26 WAY

CAV	CIRCUIT	FUNCTION
1	L4 16VT/WT (EXCEPT HEADLAMP LEVELING)	DIMMER SWITCH LOW BEAM OUTPUT
1	L63 18DG/RD (HEADLAMP LEVELING)	LEFT REAR TURN SIGNAL
2	L7 18BK/YL (EXCEPT HEADLAMP LEVELING)	HEADLAMP SWITCH OUTPUT
2	L62 18BR/RD (HEADLAMP LEVELING)	RIGHT REAR TURN SIGNAL
3	F35 18RD	FUSED B(+)
4	P35 18OR/BK	DOOR LOCK RELAY OUTPUT
5	P34 18DB	DRIVER DOOR UNLOCK RELAY OUTPUT
6	P36 18PK/BK	DOOR UNLOCK RELAY OUTPUT
7	M9 20DB/OR	PASSENGER DOOR AJAR/RKE SENSE
8	Z1 18BK	GROUND
9	M1 18PK	FUSED B(+)
10	P97 20WT/DG (LHD)	LEFT DOOR SWITCH MUX
10	P96 20DG (RHD)	RIGHT DOOR SWITCH MUX
11	P96 20DG (LHD)	RIGHT DOOR SWITCH MUX
11	P97 20WT/DG (RHD)	LEFT DOOR SWITCH MUX
12	Z2 20BK/LG	GROUND
13	X161 20WT (JAPAN)	RKE ANTENNA
14	G78 20TN/BK	LIFTGATE AJAR SWITCH SENSE
15	X5 20LB/RD (EXPORT)	SIREN CONTROL
16	P33 18OR/BK	DRIVER DOOR LOCK RELAY OUTPUT
17	G69 20BK/OR (ALARM)	VTSS INDICATOR DRIVER
18	X3 20BK/RD (ALARM)	HORN RELAY CONTROL
19	D25 20VT/YL	PCI BUS
20	G120 20WT/LB (EXPORT)	INTRUSION SENSOR SIGNAL
21	-	-
22	G5 20DB/BK	FUSED IGNITION SWITCH OUTPUT (RUN-START)
23	G70 20BR/TN (EXPORT)	HOOD AJAR SWITCH SENSE
24	-	-
25	G74 20TN/RD (RHD)	RIGHT FRONT DOOR AJAR SWITCH SENSE
25	G75 20TN (LHD)	LEFT FRONT DOOR AJAR SWITCH SENSE
26	X161 20WT (JAPAN)	RKE ANTENNA

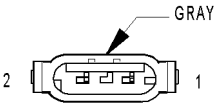

RIGHT BACK-UP LAMP

RIGHT BACK-UP LAMP - GRAY 2 WAY

CAV	CIRCUIT	FUNCTION
1	L1 18VT/BK	BACK-UP LAMP SWITCH OUTPUT
2	Z1 18BK	GROUND

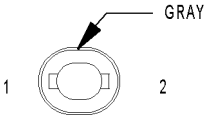

RIGHT CITY LAMP (EXPORT)

RIGHT CITY LAMP (EXPORT) - GRAY 2 WAY

CAV	CIRCUIT	FUNCTION
1	Z1 18BR	GROUND
2	L7 18BK	HEADLAMP SWITCH OUTPUT

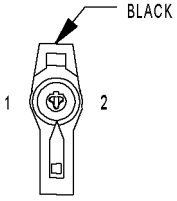

RIGHT CYLINDER LOCK SWITCH (EXPORT)

RIGHT CYLINDER LOCK SWITCH (EXPORT) - BLACK 2 WAY

CAV	CIRCUIT	FUNCTION
1	P96 20LG	RIGHT DOOR SWITCH MUX
2	Z1 20BK	GROUND

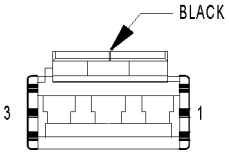

RIGHT DOOR LOCK SWITCH

RIGHT DOOR LOCK SWITCH - BLACK 3 WAY

CAV	CIRCUIT	FUNCTION
1	L7 18BK/YL	HEADLAMP SWITCH OUTPUT
2	P96 18LG	RIGHT DOOR SWITCH MUX
2	P96 20WT/DG	RIGHT DOOR SWITCH MUX
3	Z1 18BK	GROUND

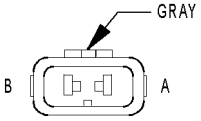

RIGHT FOG LAMP

RIGHT FOG LAMP - GRAY 2 WAY

CAV	CIRCUIT	FUNCTION
A	L39 18LB	FOG LAMP SWITCH OUTPUT
B	Z1 18BK	GROUND

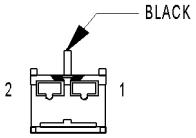

RIGHT FRONT DOOR SPEAKER

RIGHT FRONT DOOR SPEAKER - BLACK 2 WAY

CAV	CIRCUIT	FUNCTION
1	X56 18DB/RD	RIGHT FRONT SPEAKER (-)
2	X54 18VT	RIGHT FRONT SPEAKER (+)

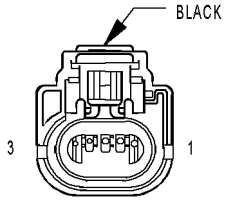

RIGHT FRONT PARK/TURN SIGNAL LAMP (EXCEPT EXPORT)

RIGHT FRONT PARK/TURN SIGNAL LAMP (EXCEPT EXPORT) - BLACK 3 WAY

CAV	CIRCUIT	FUNCTION
1	Z1 18BK	GROUND
2	L7 18BK/YL	HEADLAMP SWITCH OUTPUT
3	L160 18TN/RD	RIGHT TURN SIGNAL (OUT)

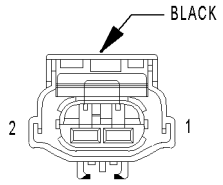

RIGHT FRONT POWER WINDOW MOTOR

RIGHT FRONT POWER WINDOW MOTOR - BLACK 2 WAY

CAV	CIRCUIT	FUNCTION
1	Q22 14WT	RIGHT FRONT WINDOW DRIVER (DOWN)
2	Q12 14LB	RIGHT FRONT WINDOW DRIVER (UP)

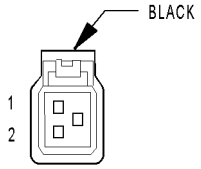

RIGHT FRONT SIDE MARKER (EXPORT)

RIGHT FRONT SIDE MARKER (EXPORT) - BLACK 2 WAY

CAV	CIRCUIT	FUNCTION
1	L60 18TN	RIGHT TURN SIGNAL (IN)
2	Z1 18BK	GROUND

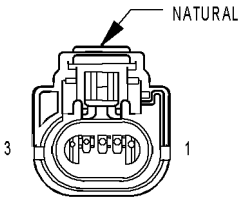

RIGHT FRONT TURN SIGNAL LAMP (EXPORT)

RIGHT FRONT TURN SIGNAL LAMP (EXPORT) - NATURAL 3 WAY

CAV	CIRCUIT	FUNCTION
1	Z1 18BK	GROUND
2	-	-
3	L60 18TN	RIGHT TURN SIGNAL (OUT)

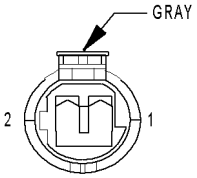

RIGHT FRONT WHEEL SPEED SENSOR

RIGHT FRONT WHEEL SPEED SENSOR - (SENSOR SIDE) 2 WAY

CAV	CIRCUIT	FUNCTION
1	WT	RIGHT FRONT WHEEL SPEED SENSOR 12V SUPPLY
2	WT/DB	RIGHT FRONT WHEEL SPEED SENSOR SIGNAL

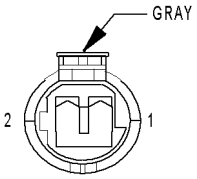

RIGHT FRONT WHEEL SPEED SENSOR

RIGHT FRONT WHEEL SPEED SENSOR - GRAY 2 WAY

CAV	CIRCUIT	FUNCTION
1	B7 18WT	RIGHT FRONT WHEEL SPEED SENSOR 12V SUPPLY
2	B6 18WT/DB	RIGHT FRONT WHEEL SPEED SENSOR SIGNAL

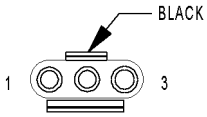

RIGHT HEADLAMP LEVELING MODULE (EXPORT)

RIGHT HEADLAMP LEVELING MODULE (EXPORT) - BLACK 3 WAY

CAV	CIRCUIT	FUNCTION
1	Z1 18BR	GROUND
2	L13 18OR	HEADLAMP ADJUST SIGNAL
3	L43 18YL	FUSED LEFT LOW BEAM OUTPUT

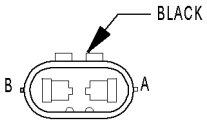

RIGHT HIGH BEAM HEADLAMP

RIGHT HIGH BEAM HEADLAMP - BLACK 2 WAY

CAV	CIRCUIT	FUNCTION
A	L34 16RD/OR	DIMMER SWITCH HIGH BEAM OUTPUT
B	Z1 16BK	GROUND

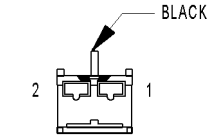

RIGHT INSTRUMENT PANEL SPEAKER

RIGHT INSTRUMENT PANEL SPEAKER - BLACK 2 WAY

CAV	CIRCUIT	FUNCTION
1	X56 18DB/RD	RIGHT FRONT SPEAKER (-)
2	X54 18VT	RIGHT FRONT SPEAKER (+)

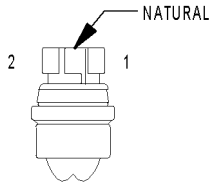

RIGHT LICENSE LAMP (EXPORT)

RIGHT LICENSE LAMP (EXPORT) - NATURAL 2 WAY

CAV	CIRCUIT	FUNCTION
1	L7 18BK/YL	HEADLAMP SWITCH OUTPUT
2	Z1 18BK	GROUND

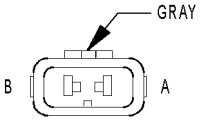

RIGHT LOW BEAM HEADLAMP

RIGHT LOW BEAM HEADLAMP - GRAY 2 WAY

CAV	CIRCUIT	FUNCTION
A	L44 16VT/RD	FUSED RIGHT LOW BEAM OUTPUT
B	Z1 16BK	GROUND

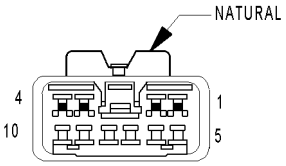

RIGHT POWER MIRROR

RIGHT POWER MIRROR - NATURAL 10 WAY

CAV	CIRCUIT	FUNCTION
1	Z1 20BK	GROUND
2	P70 20YL/PK (LHD)	RIGHT MIRROR RIGHT/DOWN MOVEMENT
2	P76 20YL/PK (RHD)	LEFT/RIGHT MIRROR RIGHT/DOWN MOVEMENT
3	C16 20LB/YL	FUSED REAR WINDOW DEFOGGER SWITCH OUTPUT
4	P72 20BR/YL	RIGHT MIRROR UP MOVEMENT
5	P74 20DB/WT	RIGHT MIRROR LEFT MOVEMENT
6	P159 20DG/WT (POWER FOLDING MIRRORS)	MIRROR UNFOLD
7	-	-
8	-	-
9	-	-
10	P160 20LB/BK (POWER FOLDING MIRRORS)	MIRROR FOLD

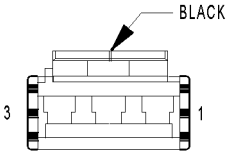

RIGHT REAR DOOR POWER LOCK MOTOR

RIGHT REAR DOOR POWER LOCK MOTOR - BLACK 3 WAY

CAV	CIRCUIT	FUNCTION
1	P35 18OR/VT	DOOR LOCK RELAY OUTPUT
2	-	-
3	P36 18PK/VT	DOOR UNLOCK RELAY OUTPUT

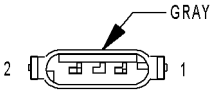

RIGHT REAR FOG LAMP (RHD EXPORT)

RIGHT REAR FOG LAMP (RHD EXPORT) - GRAY 2 WAY

CAV	CIRCUIT	FUNCTION
1	L38 18BR/WT	REAR FOG LAMP SWITCH OUTPUT
2	Z1 18BK	GROUND

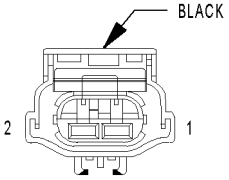

RIGHT REAR POWER WINDOW MOTOR

RIGHT REAR POWER WINDOW MOTOR - BLACK 2 WAY

CAV	CIRCUIT	FUNCTION
1	Q24 14RD/DG	RIGHT REAR WINDOW DRIVER (DOWN)
2	Q14 14DB/GY	RIGHT REAR WINDOW DRIVER (UP)

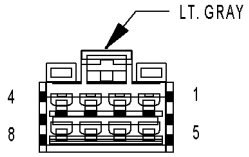

RIGHT REAR POWER WINDOW SWITCH

RIGHT REAR POWER WINDOW SWITCH - LT. GRAY 8 WAY

CAV	CIRCUIT	FUNCTION
1	-	-
2	Q18 14GY/BK	MASTER RIGHT REAR WINDOW DRIVER (UP)
3	Q28 14DG/WT	MASTER RIGHT REAR WINDOW DRIVER (DOWN)
4	Q1 14YL	WINDOW SWITCH SUPPLY
5	Q14 14GY	RIGHT REAR WINDOW DRIVER (UP)
6	Q1 14YL	WINDOW SWITCH SUPPLY
7	Z1 14BK	GROUND
8	Q24 14DG	RIGHT REAR WINDOW DRIVER (DOWN)

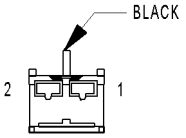

RIGHT REAR SPEAKER

RIGHT REAR SPEAKER - BLACK 2 WAY

CAV	CIRCUIT	FUNCTION
1	X58 18DB/BK	RIGHT REAR SPEAKER (-)
2	X52 18DB/WT	RIGHT REAR SPEAKER (+)

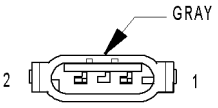

RIGHT REAR TURN SIGNAL LAMP

RIGHT REAR TURN SIGNAL LAMP - GRAY 2 WAY

CAV	CIRCUIT	FUNCTION
1	L62 18BR/RD	RIGHT REAR TURN SIGNAL
2	Z1 18BK	GROUND

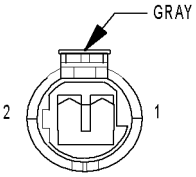

RIGHT REAR WHEEL SPEED SENSOR

RIGHT REAR WHEEL SPEED SENSOR - (SENSOR SIDE) 2 WAY

CAV	CIRCUIT	FUNCTION
1	YL	RIGHT REAR WHEEL SPEED SENSOR 12V SUPPLY
2	YL/DB	RIGHT REAR WHEEL SPEED SENSOR SIGNAL

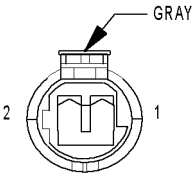

RIGHT REAR WHEEL SPEED SENSOR

RIGHT REAR WHEEL SPEED SENSOR - GRAY 2 WAY

CAV	CIRCUIT	FUNCTION
1	B2 20YL	RIGHT REAR WHEEL SPEED SENSOR 12V SUPPLY
2	B1 20YL/DB	RIGHT REAR WHEEL SPEED SENSOR SIGNAL

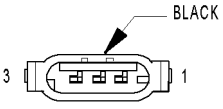

RIGHT TAIL/ STOP LAMP

RIGHT TAIL/STOP LAMP - BLACK 3 WAY

CAV	CIRCUIT	FUNCTION
1	L50 18WT/TN	BRAKE LAMP SWITCH OUTPUT
2	L7 18BK/YL	HEADLAMP SWITCH OUTPUT
3	Z1 18BK	GROUND

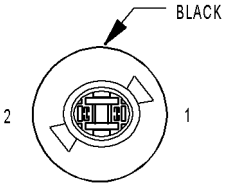

RIGHT TURN SIGNAL INDICATOR

RIGHT TURN SIGNAL INDICATOR - BLACK 2 WAY

CAV	CIRCUIT	FUNCTION
1	L60 20TN	RIGHT TURN SIGNAL (IN)
2	Z1 20BK	GROUND

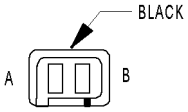

RIGHT VISOR/ VANITY LAMP (LIGHT PACKAGE)

RIGHT VISOR/VANITY LAMP (LIGHT PACKAGE) - BLACK 2 WAY

CAV	CIRCUIT	FUNCTION
A	M1 20PK	FUSED B(+)
B	Z1 20BK	GROUND

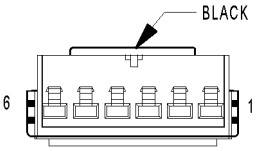

SENTRY KEY IMMOBILIZER MODULE

SENTRY KEY IMMOBILIZER MODULE - BLACK 6 WAY

CAV	CIRCUIT	FUNCTION
1	-	-
2	D25 20VT/YL	PCI BUS
3	-	-
4	G5 20DB/BK	FUSED IGNITION SWITCH OUTPUT (RUN-START)
5	Z2 20BK/LG	GROUND
6	M1 18PK	FUSED B(+)

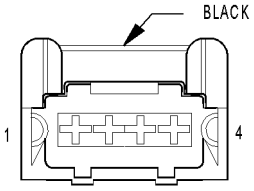

SIREN (EXPORT)

SIREN (EXPORT) - BLACK 4 WAY

CAV	CIRCUIT	FUNCTION
1	X5 20LB/RD	SIREN CONTROL
2	X5 20LB/RD	SIREN CONTROL
3	Z1 20BK	GROUND
4	M11 16PK/LG	FUSED B(+) (I.O.D.)

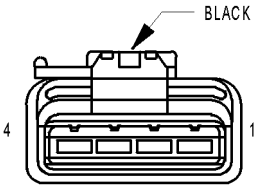

SPEED CONTROL SERVO (2.0L/2.4L)

SPEED CONTROL SERVO (2.0L/2.4L) - BLACK 4 WAY

CAV	CIRCUIT	FUNCTION
1	V36 20TN/RD	S/C VACUUM CONTROL
2	V35 20LG/RD	S/C VENT CONTROL
3	V40 20DB/RD	SPEED CONTROL BRAKE LAMP SWITCH OUTPUT
4	Z1 20BK	GROUND

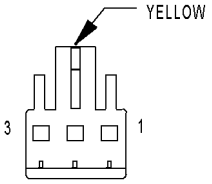

SPEED CONTROL SWITCH

SPEED CONTROL SWITCH - YELLOW 3 WAY

CAV	CIRCUIT	FUNCTION
1	V131 20BK/LG	SPEED CONTROL SWITCH SIGNAL
2	-	-
3	Z123 20RD/TN	GROUND

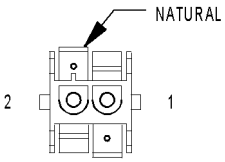

SUNROOF MOTOR

SUNROOF MOTOR - NATURAL 2 WAY

CAV	CIRCUIT	FUNCTION
1	L6 14DG	MOTOR TILT UP FEED
2	L7 14DB	MOTOR TILT DOWN FEED

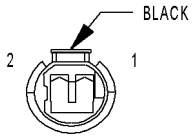

SURGE SOLENOID (2.4L TURBO)

SURGE SOLENOID (2.4L TURBO) - BLACK 2 WAY

CAV	CIRCUIT	FUNCTION
1	K150 18DB/YL	SURGE SOL CONTROL
2	A142 16DG/OR	AUTOMATIC SHUT DOWN RELAY OUTPUT

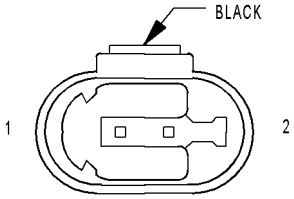

SWIRL SOLENOID (DIESEL)

SWIRL SOLENOID (DIESEL) - BLACK 2 WAY

CAV	CIRCUIT	FUNCTION
1	K47 20DB/YL	SWIRL SOLENOID CONTROL
2	A142 16DG/OR	AUTOMATIC SHUT DOWN RELAY OUTPUT

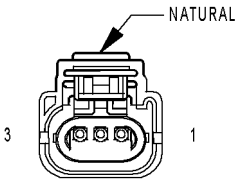

THROTTLE INLET PRESSURE SENSOR (2.4L TURBO)

THROTTLE INLET PRESSURE SENSOR (2.4L TURBO) - NATURAL 3 WAY

CAV	CIRCUIT	FUNCTION
1	K153 20DB/LG	TIP SIGNAL
2	K167 20BR/YL	SENSOR GROUND 2
3	K6 20VT/WT	5 VOLT SUPPLY

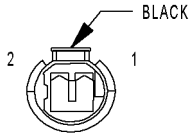

THROTTLE INLET PRESSURE SOLENOID (2.4L TURBO)

THROTTLE INLET PRESSURE SOLENOID (2.4L TURBO) - BLACK 2 WAY

CAV	CIRCUIT	FUNCTION
1	K55 18LB	TIP SOL CONTROL
2	F12 18DB/WT	FUSED IGNITION SWITCH OUTPUT (RUN-START)

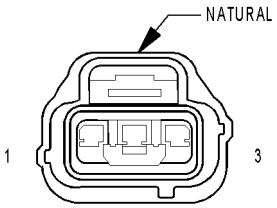

THROTTLE POSITION SENSOR (2.0L/2.4L)

THROTTLE POSITION SENSOR (2.0L/2.4L) - NATURAL 3 WAY

CAV	CIRCUIT	FUNCTION
1	K7 20OR	5 VOLT SUPPLY
2	K22 20OR/DB	TP SIGNAL
3	K4 20BK/LB	SENSOR GROUND 1

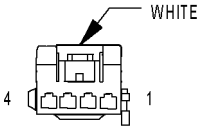

TRACTION CONTROL SWITCH

TRACTION CONTROL SWITCH - WHITE 4 WAY

CAV	CIRCUIT	FUNCTION
1	-	-
2	B27 18RD/YL	TRACTION CONTROL SWITCH SENSE
3	Z1 20BK	GROUND
4	E2 20OR	PANEL LAMPS DRIVER

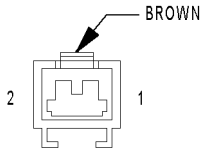

TRANSMISSION RANGE INDICATOR ILLUMINATION (PRNDL) (AUTOSTICK)

TRANSMISSION RANGE INDICATOR ILLUMINATION (PRNDL) (AUTOSTICK) - BROWN 2 WAY

CAV	CIRCUIT	FUNCTION
1	E2 20OR	PANEL LAMPS DRIVER
2	Z1 20BK	GROUND

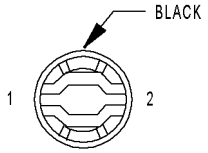

TRANSMISSION RANGE INDICATOR ILLUMINATION (PRNDL) (EXCEPT AUTOSTICK)

TRANSMISSION RANGE INDICATOR ILLUMINATION (PRNDL) (EXCEPT AUTOSTICK) - BLACK 2 WAY

CAV	CIRCUIT	FUNCTION
1	E2 20OR	PANEL LAMPS DRIVER
2	Z1 20BK	GROUND

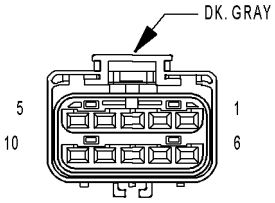

TRANSMISSION RANGE SENSOR (2.0L/2.4L)

TRANSMISSION RANGE SENSOR (2.0L/2.4L) - DK. GRAY 10 WAY

CAV	CIRCUIT	FUNCTION
1	F20 20WT	FUSED IGNITION SWITCH OUTPUT (RUN)
2	-	-
3	T13 20DB/BK	SPEED SENSOR GROUND
4	T54 20VT/PK	TRANSMISSION TEMPERATURE SENSOR SIGNAL
5	-	-
6	L1 20VT/BK	BACK-UP LAMP SWITCH OUTPUT
7	T1 20LG/BK	TRS T1 SENSE
8	T3 20VT	TRS T3 SENSE
9	T42 20VT/WT	TRS T42 SENSE
10	T41 20BK/WT	TRS T41 SENSE

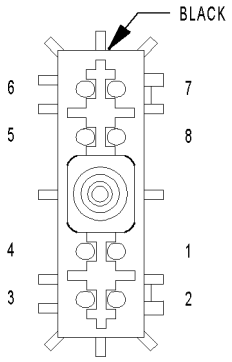

TRANSMISSION SOLENOID/ PRESSURE SWITCH ASSEMBLY (2.0L/2.4L)

TRANSMISSION SOLENOID/PRESSURE SWITCH ASSEMBLY (2.0L/2.4L) - BLACK 8 WAY

CAV	CIRCUIT	FUNCTION
1	T47 18YL/BK	2-4 PRESSURE SWITCH SENSE
2	T50 18DG	LOW/REVERSE PRESSURE SWITCH SENSE
3	T9 18OR/BK	OVERDRIVE PRESSURE SWITCH SENSE
4	T16 16RD	TRANSMISSION CONTROL RELAY OUTPUT
5	T59 18PK (2.0L/2.4L EXCEPT TURBO)	UNDERDRIVE SOLENOID CONTROL
5	T59 18PK/BK (2.4L TURBO)	UNDERDRIVE SOLENOID CONTROL
6	T60 18BR	OVERDRIVE SOLENOID CONTROL
7	T20 18LB	LOW/REVERSE SOLENOID CONTROL
8	T19 18WT	2-4 SOLENOID CONTROL

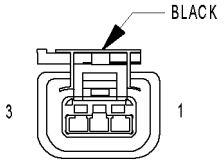

VEHICLE SPEED SENSOR (DIESEL)

VEHICLE SPEED SENSOR (DIESEL) - BLACK 3 WAY

CAV	CIRCUIT	FUNCTION
1	K9 20RD/BK	SENSOR REFERENCE VOLTAGE B
2	N907 20BK/VT	VEHICLE SPEED SENSOR GROUND
3	G7 20GY/WT	VEHICLE SPEED SENSOR SIGNAL

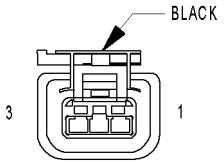

VEHICLE SPEED SENSOR (GAS MTX)

VEHICLE SPEED SENSOR (GAS MTX) - BLACK 3 WAY

CAV	CIRCUIT	FUNCTION
1	K7 20OR (EXCEPT 1.6L)	5 VOLT SUPPLY
1	F857 20OR/PK (1.6L)	VEHICLE SPEED SENSOR 5V SUPPLY
2	N907 20BR/OR (1.6L)	VEHICLE SPEED SENSOR GROUND
2	K4 20BK/LB (EXCEPT 1.6L)	SENSOR GROUND 1
3	G7 20WT/OR (EXCEPT 1.6L)	VEHICLE SPEED SIGNAL
3	G7 20WT/OR (1.6L)	VEHICLE SPEED SENSOR SIGNAL

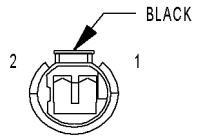

WASTEGATE SOLENOID (2.4L TURBO)

WASTEGATE SOLENOID (2.4L TURBO) - BLACK 2 WAY

CAV	CIRCUIT	FUNCTION
1	K137 18DB/GY	WASTEGATE SOL CONTROL
2	Z1 18BK	GROUND

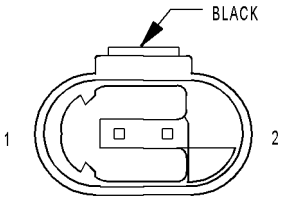

WASTEGATE SOLENOID (DIESEL)

WASTEGATE SOLENOID (DIESEL) - BLACK 2 WAY

CAV	CIRCUIT	FUNCTION
1	K137 20DB/GY	WASTEGATE SOLENOID CONTROL
2	A142 16DG/OR	AUTOMATIC SHUT DOWN RELAY OUTPUT

8W-91 CONNECTOR/GROUND/SPLICE LOCATION

TABLE OF CONTENTS

page

CONNECTOR/GROUND/SPLICE LOCATION
DESCRIPTION 1

CONNECTOR/GROUND/SPLICE LOCATION

DESCRIPTION

This section provides illustrations identifying connector, ground and splice locations in the vehicle. Connector, ground and splice indexes are provided. Use the wiring diagrams in each section for connector, ground and splice identification. Refer to the appropriate index for the proper figure number. For items that are not shown in this section N/S is placed in the Fig. column.

CONNECTORS

CONNECTOR NAME/ NUMBER	COLOR	LOCATION	FIG.
A/C Compressor Clutch	BK	Lower Right Side of Engine Compartment On Engine	20, 21, 23,26
A/C - Heater Control Switch	GY	Center of Instrument Panel	30
A/C High Pressure Switch	LT GY	Lower Right Side Engine Compartment	21, 23
A/C Low Pressure Switch (LHD)	BK	Right Rear of Engine Compartment	1, 10, 11, 17
A/C Low Pressure Switch (RHD)	BK	Left Rear of Engine Compartment	10, 11, 15
A/C Pressure Transducer	GY	Lower Right Side of Engine Compartment on Engine	26
Accelerator Pedal Position Sensor	BK	Right Side Engine Compartment	9, 11, 17
Airbag Control Module (ORC) (Base)	YL	Under Center Console	36
Airbag Control Module (ORC) C1 (Premium)	YL	Under Center Console	36
Airbag Control Module (ORC) C2 (Premium)	YL	Under Center Console	36
Ambient Temperature Sensor	BK	Lower Left Front Fascia	1, 19
Ambient Temperature Sensor (Gas)	BK	Left Front Engine Compartment	1
Ambient Temperature Sensor - NGC	BK	Left Front Engine Compartment	1
Autostick Switch	WT	Center Console	36
Back-Up Lamp Switch	GY	Left Side of Engine Compartment on Manual Transmission	20, 21, 23,25, 26

CONNECTOR/GROUND/SPLICE LOCATION (Continued)

CONNECTOR NAME/ NUMBER	COLOR	LOCATION	FIG.
Barometric Read Solenoid (2.4L Turbo)	BK	Right Rear Engine Compartment	10
Battery Jump Post		Left Rear Engine Compartment	18
Battery Temperature Sensor (Diesel)	BK	Lower Passenger B-Pillar	48
Battery Temperature Sensor (Gas)	BK	Left Front Engine Compartment	13
Battery (+) (Diesel)		Under Left of Rear Seat	48
Battery (-) (Diesel)		Under Left of Rear Seat	48
Blower Motor	BK	Right Rear of Instrument Panel	N/S
Blower Motor Resistor Block	BK	Right Side of Cowl Panel	4, 13, 14, 16
Boost Pressure Sensor	BK	Lower Rear of Engine Compartment on Engine	20
Brake Lamp Switch	GY	Left Side of Brake Pedal	13, 14, 16
Brake Transmission Shift Interlock Solenoid	WT	Below Steering Column	27
Brake Warning Indicator Switch (LHD)	BK	Left Rear of Engine Compartment	1, 2, 4, 9, 12
Brake Warning Indicator Switch (RHD)	BK	Right Rear of Engine Compartment	N/S
C101	BK	Left Front Engine Compartment	1
C102	LT GY	Front Left Side of Engine Compartment	1, 21, 23
C103	DK GY	Front Side of Engine Compartment on Engine	21, 23
C105	WT	Left Side of Instrument Panel	13, 14, 16, 28, 33
C106	GY	Left Side of Instrument Panel	13, 14, 16, 28, 33
C107 (Export)	BK	Left Front of Vehicle	3, 4, 12, 15
C108 (Export)	BK	Right Front of Vehicle	8, 19
C109	BK	Lower Right Side of Engine Compartment	9, 10, 11, 17
C110	BK	Lower Right Side of Engine Compartment	9, 10, 11, 17
C111	LT GY	Left Front of Engine Compartment	4, 26
C112	BK	Left Front of Engine Compartment	4, 26
C114	DK GY	Left Front of Engine Compartment	4, 26
C121	BK	Front of Engine Compartment	19, 20
C122	LT GY	Front of Engine Compartment	19, 20
C124	DK GY	Front of Engine Compartment	19, 20
C125	BK	Front of Engine Compartment	12, 15, 20
C126	DK GY	Left Side of Engine Compartment	12, 15
C127	BK	Left Rear of Engine Compartment	12, 15, 18
C128	BK	Left Rear of Engine Compartment	12, 15, 18
C200	BK	Left Side of Instrument Panel	28, 32

CONNECTOR/GROUND/SPLICE LOCATION (Continued)

CONNECTOR NAME/ NUMBER	COLOR	LOCATION	FIG.
C201	BK	Right Side of Instrument Panel	29, 33
C202	WT	Left Kick Panel	28, 32, 44
C203	GN	Lower Right Kick Panel	29, 33, 41
C204	WT	Left Side of Instrument Panel	28, 32, 38, 39, 44
C205	WT	Upper Right Kick Panel	29, 33, 38, 39, 41
C206 (LHD)	BK	Below Driver's Seat	36
C207	RD	Right Side of Instrument Panel	N/S
C208	RD	Left Side of Instrument Panel	35
C209 (LHD)	BK	Right Rear of Instrument Panel	29
C209 (RHD)	BK	Left Rear of Instrument Panel	32
C210 (RHD)	BK	Below Driver Seat	36
C211	WT	Below Driver Seat	N/S
C300	BK	Left B-Pillar	40, 45
C301	BK	Right B-Pillar	40, 42
C302	WT	Top Left of Liftgate	47, 51, 52
C303	DK GY	Left Rear Quarter	46, 53
C304	BK	Side of Fuel Tank	49
C305	YL	Left Rear of Front Console	44
C306	YL	Left Side of Front Console	41
C307	BK	Under Passenger Seat	N/S
C308	BK	Under Driver Seat	N/S
Camshaft Position Sensor	BK	On Engine Left Side of Engine Compartment	20, 22, 2325
Cargo Lamp	BK	Cargo Area	43
Center High Mounted Stop Lamp	BK	Top of Liftgate	51, 52
Center Stack Lamp	BK	Bottom Center of Instrument Panel	30
Cigar Lighter	BK	Bottom Center of Instrument Panel	36
Clockspring	GN	Bottom of Steering Wheel	27
Clutch Pedal Position Switch (Up)	BK	Left Side of Steering Column	11, 13, 14, 16
Controller Antilock Brake	BK	Left Side of Engine Compartment	2, 4, 12, 15
Crankshaft Position Sensor (2.0L/2.4L)	BK	Lower Rear of Engine Compartment On Engine	22, 23
Crankshaft Position Sensor (1.6L Gas/ 2.2L Diesel)	BK	Lower Front of Engine Compartment on Engine	20, 26
Data Link Connector	BK	Left Side of Instrument Panel	13, 14, 16
Dome Lamp	BK	Center of Headliner	N/S
Dome Lamp/Intrusion Sensor	WT	Center of Headliner	N/S
Driver Airbag	YL	Front of Steering Wheel	N/S
Driver Door Ajar Switch	BK	Left B-Pillar	N/S
Driver Door Power Lock Motor/Ajar Switch	BK	Driver Door	38, 39

CONNECTOR/GROUND/SPLICE LOCATION (Continued)

CONNECTOR NAME/ NUMBER	COLOR	LOCATION	FIG.
Driver Heated Seat Cushion	BK	Driver Seat	N/S
Driver Heated Seat Switch	BK	Driver Seat	N/S
Driver Seat Airbag	YL	Driver Seat	N/S
Driver Seat Belt Switch (LHD)	BK	Lower Left B-Pillar	45
Driver Seat Belt Switch (RHD)	BK	Lower Right B-Pillar	42
Driver Seat Belt Tensioner (LHD)	YL	Left B-Pillar	45
Driver Seat Belt Tensioner (RHD)	YL	Right B-Pillar	42
Driver Side Impact Sensor 1	GY	Lower Left B-Pillar	45
EGR Solenoid	GY	Rear of Engine Compartment on Engine	12, 15, 22
Electronic Throttle Control Module (1.6L)	BK	Center of Engine Compartment on Top of Engine	25, 26
Engine Control Module - C1	BK	Left Side Engine Compartment	20
Engine Control Module - C2	BK	Left Side of Engine Compartment	20
Engine Coolant Temperature Sensor	BK	Left Side of Engine Compartment on Engine	21, 26
Engine Oil Pressure Switch	LT GN	Right Rear of Engine Compartment	20, 22, 24, 25
Engine Starter Motor (1.6L)		Lower Rear of Engine Compartment on Engine	5, 25
Engine Starter Motor (2.0L/2.4L Except Turbo, 2.2L Diesel)		Lower Front of Engine Compartment on Engine	6, 18, 20, 21
Engine Starter Motor (2.4L Turbo)		Rear Engine Compartment on Engine	7, 23
EVAP/Purge Solenoid	BK	Lower Right Rear of Engine Compartment	1, 4, 10
Front Power Window Switch	NAT	Top Center of Instrument Panel	30
Front Washer Pump Motor	BK	Attached to Washer Reservoir	4, 13, 14, 16
Front Wiper Motor	BK	Center of Cowl Panel	4, 13, 14, 16
Front Wiper/Washer Switch	GY	Part of Multi-Function Switch	27
Fuel Heater Module (Diesel)	WT	Rear of Engine Compartment	12, 15
Fuel Injector No.1	BK	Center of Engine Compartment At Injector	20
Fuel Injector No.2	BK	Center of Engine Compartment At Injector	20
Fuel Injector No.3	BK	Center of Engine Compartment At Injector	20
Fuel Injector No.4	BK	Center of Engine Compartment At Injector	20, 26
Fuel Pressure Sensor	BK	Front of Engine Compartment on Engine	N/S
Fuel Pressure Solenoid	BK	Front of Engine Compartment Top of Engine	N/S
Fuel Pump Module	LT GY	On Fuel Tank	49

CONNECTOR/GROUND/SPLICE LOCATION (Continued)

CONNECTOR NAME/ NUMBER	COLOR	LOCATION	FIG.
Fuse Block	BK	Left Bottom of Instrument Panel	27, 28, 33
Fusible Link (2.0L/2.4L)		Front of Engine Compartment on Engine	21
Generator	BK	Right Front of Engine Compartment on Engine	18, 20, 22, 26
Glow Plug No. 1		Center of Engine Compartment Top of Engine	N/S
Glow Plug No. 2		Center of Engine Compartment Top of Engine	N/S
Glow Plug No. 3		Center of Engine Compartment Top of Engine	N/S
Glow Plug No. 4		Center of Engine Compartment Top of Engine	N/S
Headlamp Leveling Switch	BK	Center of Instrument Panel	30
Heated Seat Module	GR	Driver Seat	N/S
High Note Horn	BK	Left Inner Fender	1, 8, 19
Hood Ajar Switch	BK	Left Rear Engine Compartment	1, 4, 12, 15
Hood Lamp Switch		Left Rear Engine Compartment	1
Idle Air Control Motor	BK	Center of Engine Compartment Top of Engine	22
Ignition Coil	BK	Left Rear of Engine Compartment on Engine	22, 26
Ignition Switch C1	BK	Right Side of Steering Column	27
Ignition Switch C2	WT	Right Side of Steering Column	27
Inlet Air Temperature Sensor	BK	Left Side Engine Compartment on Engine	20, 22, 2325, 26
Input Speed Sensor	GY	Front of Engine Compartment on Transmission	21, 23
Instrument Cluster C1	BK	Driver’s Side of Instrument Panel	27
Instrument Cluster C2	BK	Driver’s Side of Instrument Panel	27
Instrument Panel Jumper		Left Side Instrument Panel Near C208	35
Intake Air Temperature Sensor (Diesel)	BK	Left Top of Engine	20
Knock Sensor	BK	Front of Engine Compartment on Engine	21, 23
Leak Detection Pump (Except NGC)	BK	Near Fuel Tank Module	N/S
Left Back-Up Lamp	GY	Left Side of Rear Fascia	53
Left City Lamp	GY	Left Front of Vehicle Near C107	N/S
Left Cylinder Lock Switch	BK	Driver Door	38, 39
Left Door Lock Switch	BK	Driver Door	38, 39
Left Fog Lamp	GY	Lower Left Front Fascia	1, 3, 19
Left Front Door Speaker	BK	Left Door	38, 39
Left Front Park/Turn Signal Lamp	NAT	Left Front of Vehicle	3, 12, 15

CONNECTOR/GROUND/SPLICE LOCATION (Continued)

CONNECTOR NAME/ NUMBER	COLOR	LOCATION	FIG.
Left Front Power Window Motor	BK	Left Front Door	38, 39
Left Front Side Marker Lamp (Export)	BK	Left Front Wheel Opening	3, 15
Left Front Turn Signal Lamp	NAT	Left Front of Vehicle	N/S
Left Front Wheel Speed Sensor	GY	Left Front Wheel Opening	1, 4, 12, 15
Left Headlamp Leveling Module	BK	Left Front of Vehicle Near C107	N/S
Left High Beam Headlamp	BK	At Headlamp Assembly	2, 3, 14, 16
Left Instrument Panel Speaker	BK	Left Upper Instrument Panel	N/S
Left License Lamp (Built-Up-Export)	NAT	Left Side of Rear Fascia	53
Left Low Beam Headlamp	GY	At Headlamp Assembly	3, 4, 12, 15
Left Power Mirror	WT	Left Front Door	38, 39
Left Rear Door Ajar Switch		Above Left Rear Wheel Well	46
Left Rear Door Power Lock Motor	BK	Rear of Left Rear Door	40
Left Rear Fog Lamp (LHD)	GY	Left Side of Rear Fascia	N/S
Left Rear Power Window Motor	BK	Left Rear Door	40
Left Rear Power Window Switch	LT GY	Rear of Front Center Console	36
Left Rear Speaker	BK	Left C-Pillar	47
Left Rear Turn Signal Lamp	GY	In Rear Lamp Assembly	46, 53
Left Rear Wheel Speed Sensor	GY	Left Rear Wheel Opening	N/S
Left Tail/Stop Lamp	BK	In Rear Lamp Assembly	46, 53
Left Turn Signal Indicator	BK	Left Top Side of Instrument Panel	31
Left Visor/Vanity Lamp	BK	Left Front Side of Headliner	N/S
License Lamp (Except Export)	NAT	Center of Rear Fascia	53
Liftgate Ajar Switch	BK	Bottom of Liftgate	50
Liftgate Cylinder Lock Switch	LT GY	Inside Liftgate	50
Liftgate Power Lock Motor	BK	Inside Liftgate	50
Low Note Horn	BK	Left Inner Fender	1, 8, 19
Manifold Absolute Pressure Sensor	BK	Rear of Engine Compartment Top of Engine	22, 24, 25
Map/Reading Lamps	BK	Front Headliner	N/S
Mass Air Flow Sensor	BK	Left Side of Engine Compartment on Engine	20
Mega Fuse		Below Passenger Seat	48
Multi-Function Switch	GY	Steering Column	27
Natural Vacuum Leak Detection Assembly (NGC)	BK	Right Front Fuel Tank	49
Noise Suppressor (1.6L)		Rear of Engine	25
Noise Suppressor (2.0L/2.4L)		Left Side Engine Compartment on Engine	22, 24

CONNECTOR/GROUND/SPLICE LOCATION (Continued)

CONNECTOR NAME/ NUMBER	COLOR	LOCATION	FIG.
Output Speed Sensor	GY	Front of Engine Compartment on Transmission	21, 23
Overhead Console Module	BK	Front Center of Headliner	N/S
Oxygen Sensor 1/1 Upstream	GY	Left Side Engine Compartment	22, 2425
Oxygen Sensor 1/2 Downstream	BK	Left Side Engine Compartment	22, 24, 25, 26
Parking Brake Switch		Rear of Front Center Console	36
Passenger Airbag	YL	Passenger Side of Instrument Panel	29, 32, 34
Passenger Door Power Lock Motor/Ajar Switch	BK	Passenger Door	38, 39
Passenger Heated Seat Cushion		Passenger Seat	N/S
Passenger Heated Seat Switch		Passenger Seat	N/S
Passenger Seat Airbag	YL	Passenger Seat	N/S
Passenger Seat Belt Switch (LHD)	BK	Lower Right B-Pillar	42
Passenger Seat Belt Switch (RHD)	BK	Lower Left B-Pillar	45
Passenger Seat Belt Tensioner (LHD)	YL	Right B-Pillar	42
Passenger Seat Belt Tensioner (RHD)	YL	Left B-Pillar	45
Passenger Side Impact Sensor 1	GY	Lower Right B-Pillar	42
PCV Heater		Rear Center of Engine Compartment	12, 15
Power Distribution Center	BK	Left Side of Engine Compartment	4, 5, 6, 12, 15
Power Mirror Switch (LHD)	BK	Left Side of Instrument Panel	28
Power Mirror Switch (RHD)	GY	Right Side of Instrument Panel	33
Power Outlet	BK	Top of Front Console	30
Power Seat Motor	GY	Inside Driver Seat	N/S
Power Seat Switch	WT	Below Driver Seat	N/S
Power Steering Pressure Switch	GY	Left Rear Engine Compartment	1, 4
Power Sunroof Module C1	NAT	Right Side of Sunroof	37
Power Sunroof Module C2	BK	Sunroof	N/S
Powertrain Control Module (1.6L)	BK	Left Rear of Engine	25, 26
Powertrain Control Module C1 (2.0L/2.4L)	BK	Left Side Engine Compartment	22
Powertrain Control Module C2 (2.0L/2.4L)	GY	Left Side Engine Compartment	1, 23
Powertrain Control Module C3 (2.0L/2.4L)	WT	Left Side Engine Compartment	22
Powertrain Control Module C4 (2.0L/2.4L)	GN	Left Side Engine Compartment	22, 23

CONNECTOR/GROUND/SPLICE LOCATION (Continued)

CONNECTOR NAME/ NUMBER	COLOR	LOCATION	FIG.
Radiator Fan Motor	BK	Front Center Engine Compartment	1, 2, 19
Radio	WT	Center of Instrument Panel	30
Radio Antenna (LHD)		Right Rear Instrument Panel	29
Radio Antenna (RHD)		Left Rear Instrument Panel	32
Radio Antenna Cable		Center Instrument Panel	30
Radio Ground		Center Instrument Panel	N/S
Rear Power Outlet	RD	Right Rear Cargo Area	43
Rear Window Defogger		Left Rear Liftgate	51
Rear Window Defogger Ground		Right Rear Liftgate	51
Rear Window Defogger Switch	BK	Lower Center Instrument Panel	30
Rear Wiper Motor	LT GY	Center of Liftgate	50
Rear Wiper Switch	GY	Lower Center Instrument Panel	30
Remote Keyless Entry Antenna (Japan)	BK	Center of Instrument Panel	N/S
Remote Keyless Entry Module	BK	Upper Center Instrument Panel	31
Right Back-Up Lamp	GY	Right Side of Rear Fascia	53
Right City Lamp	GY	Right Front of Vehicle Near C108	N/S
Right Cylinder Lock Switch	BK	Passenger Door	38, 39
Right Door Lock Switch	BK	Passenger Door	38, 39
Right Fog Lamp	GY	Lower Right Front Fascia	1, 8, 11, 19
Right Front Door Speaker	BK	Right Door	38, 39
Right Front Park/Turn Signal Lamp	NAT	Right Front of Vehicle	1, 8, 19
Right Front Power Window Motor	BK	Right Front Door	38, 39
Right Front Side Marker (Export)	BK	Right Front Wheel Opening	1, 8, 19
Right Front Turn Signal Lamp	NAT	Right Front of Vehicle	N/S
Right Front Wheel Speed Sensor	GY	Right Front Wheel Opening	9, 10, 11, 17
Right Headlamp Leveling Module	BK	Right Front of Vehicle Near C108	N/S
Right High Beam Headlamp	BK	Right Front Headlamp Assembly	1, 8, 11, 19
Right Instrument Panel Speaker	BK	Right Upper Instrument Panel	N/S
Right License Lamp	NAT	Right Side of Rear Fascia	53
Right Low Beam Headlamp	GY	Right Front Headlamp Assembly	1, 8, 19
Right Power Mirror	WT	Right Front Door	38, 39
Right Rear Door Ajar Switch		Right C-Pillar	43
Right Rear Door Power Lock Motor	BK	Right Rear Door	40
Right Rear Fog Lamp (RHD)	GY	Right Side of Rear Fascia	N/S
Right Rear Power Window Motor	BK	Right Rear Door	40

CONNECTOR/GROUND/SPLICE LOCATION (Continued)

CONNECTOR NAME/ NUMBER	COLOR	LOCATION	FIG.
Right Rear Power Window Switch	BK	Rear of Front Center Console	36
Right Rear Speaker	BK	Right Side Shelf Panel	43
Right Rear Turn Signal Lamp	GY	In Rear Lamp Assembly	43
Right Rear Wheel Speed Sensor	BK	Right Rear Wheel Opening	N/S
Right Tail/Stop Lamp	BK	In Rear Lamp Assembly	43
Right Turn Signal Indicator	BK	Right Side of Instrument Panel	31
Right Visor/Vanity Lamp	BK	Right Front Headliner	N/S
Sentry Key Immobilizer Module	BK	Right of Steering Column	27
Siren	BK	Left Front Wheel Opening	1, 3, 12, 15
Speed Control Servo	BK	Right Rear Corner of Engine Compartment	1, 10
Speed Control Switch	YL	At Steering Wheel	N/S
Sunroof Motor	NAT	Right Side of Sunroof Assembly	N/S
Sunroof Switch	BK	Part of Overhead Console	N/S
Surge Solenoid	BK	Right Rear Engine Compartment	10
Swirl Solenoid	BK	Rear Side of Engine Compartment	9, 17
Throttle Inlet Pressure Sensor	NAT	Right Rear Engine Compartment	10
Throttle Position Sensor	NAT	On Throttle Body	22, 23
Traction Control Switch	WT	Lower Center of Instrument Panel	30
Transmission Range Indicator Illumination (PRNDL)	BK	Left Side of Transmission Selection Lever	36
Transmission Range Sensor (2.0L/2.4L)	DK GY	Front of Engine Compartment on Transmission	21, 23
Transmission Solenoid/ Pressure Switch Assembly (2.0L/2.4L)	BK	Front of Engine Compartment on Transmission	21, 23
Vehicle Speed Sensor (Gas)	BK	Front of Engine Compartment on Transmission	23, 25, 26
Vehicle Speed Sensor (Diesel)	BK	Left Side of Engine Compartment on Engine	20
Wastegate Solenoid	BK	Rear Side of Engine Compartment	9, 10, 17

CONNECTOR/GROUND/SPLICE LOCATION (Continued)

GROUNDS

GROUND	LOCATION	FIG.
G100 (Gas)	Left Front Engine Compartment	2, 5, 6
G100 (Diesel)	Below Passenger Seat	7, 48
G101	At Battery Tray	5, 6, 7, 18
G102	Left Fender Area	1, 14, 16
G103	Left Fender Area	1, 14, 16
G104	Right Fender Area	9, 10, 11, 17
G105	Left Front Inner Fender	13, 14, 16
G106	In T/O for Powertrain Control Module	25, 26
G200	Center Rear of Instrument Panel	31
G201	Center Rear of Instrument Panel	28, 33
G202	Left Kick Panel Near T/O for Airbag Control Module	36
G203	Center Rear of Instrument Panel	31
G204	Left Kick Panel	31
G300	Left Rear Quarter	46, 47
G301	Right Rear Quarter	43
G302	Upper Left Rear Cargo Area	N/S

SPLICES

SPLICE	LOCATION	FIG.
S100	Near T/O for Fuel Injectors	N/S
S101	Near Engine Starter Eyelet	23
S102	Near T/O for Inline C103	21
S103	Near T/O for Powertrain Control Module - C1	22
S104	In T/O for PCM C4	21
S106	Near T/O for Oxygen Sensor 1/1 Upstream	22
S107	Near T/O for C103, Left Side of Engine	21
S109	Near T/O for Engine Oil Pressure Switch	22
S111 (MTX)	Near T/O for Back-up Lamp Switch	21
S111 (ATX)	Near T/O for Input Speed Sensor	N/S
S113 (LHD)	Near T/O for Brake Warning Indicator Switch	1, 12
S114	In T/O for Oxygen Sensor 1/1 Upstream	22
S115 (1.6L)	Near T/O for Brake Warning Indicator Switch	2
S115 (2.0L/2.4L Except Turbo)	Near T/O for Grounds G102/G103	1
S116 (1.6L)	In T/O for Left Low Beam Headlamp	3
S116 (2.0L export)	Near T/O for Grounds G102/G103	1, 12
S117	Near T/O for Radiator Fan Motor	13, 15, 19
S118	Left Front Engine Compartment	1, 13, 19
S119	Near T/O for Controller Antilock Brake	2, 6, 15, 16
S120	Near T/O for Right Headlamp Assembly	1, 17, 19

CONNECTOR/GROUND/SPLICE LOCATION (Continued)

SPLICE	LOCATION	FIG.
S121	Right Side Engine Compartment	9, 10, 17
S122	In T/O for Data Link Connector	13
S123 (IN PDC)	Inside of Power Distribution Center (PDC)	5, 6, 7, 12, 15
S124 (IN PDC)	Inside of Power Distribution Center (PDC)	5, 6, 12, 15
S125 (IN PDC)	Inside of Power Distribution Center (PDC)	5, 6, 7, 12, 15
S126	Near Data Link Connector	13, 14, 16
S128 (LHD Diesel)	Near T/O for PCV Heater	N/S
S128 (Gas, RHD Diesel)	Near T/O for Powertrain Control Module - C2	1, 15
S129 (1.6L)	Near T/O for Power Steering Pressure Switch	2
S129 (LHD 2.0L/2.4L)	Near T/O for Powertrain Control Module - C2	1
S129 (IN PDC) (RHD, LHD Diesel)	Inside of Power Distribution Center (PDC)	5, 12, 15
S131	Near T/O for Powertrain Control Module - C2	1, 12, 15
S132	Right Front Engine Compartment	1, 19
S134 (LHD)	Near T/O for Left Front Fog Lamp	12, 13, 15
S134 (RHD)	Right Front Engine Compartment	19
S136	In T/O for Powertrain Control Module C2 and C4	22
S138	In T/O for Siren	1, 12, 15
S140	In T/O for PCM C2 and C4	22
S141	Near T/O for EVAP Purge Solenoid	1, 2, 12, 19
S142	Near T/O for Radiator Fan Motor	13, 19
S143	Near T/O for Powertrain Control Module - C2	1
S144	Near T/O for Left Low Beam Headlamp	13, 15
S146	Near T/O for Left Headlamp Assembly	1, 15
S147 (1.6L)	Near T/O for Ignition Coil	25
S148	Near T/O for Manifold Absolute Pressure Sensor	25
S149	Near T/O for Engine Control Module C1	20
S150	Near Power Distribution Center	12, 15
S151	Near T/O for Fuel Pressure Solenoid	20
S152	Near T/O for Fuel Pressure Solenoid	20
S153	Near T/O for C126	12, 15
S154 (LHD)	Near T/O for PCV Heater	12
S154 (RHD)	Near T/O for PCV Heater	19
S155	Near T/O for C122	20
S156	Near T/O for Engine Control Module C1	20
S157	Near T/O for Fuel Pressure Solenoid	20
S158	Near T/O for Mass Air Flow Sensor	20
S159	Near T/O for Starter Motor	20
S160	Near T/O for C124	20
S161	Near T/O for C121	20
S162	Near Engine Control Module - C2	20
S163	Near Engine Control Module - C3	20

CONNECTOR/GROUND/SPLICE LOCATION (Continued)

SPLICE	LOCATION	FIG.
S164 (Diesel)	Near T/O for C128	18
S165 (Diesel)	Near Fusible Link	N/S
S166 (Diesel)	Near Fusible Link	N/S
S167 (Diesel)	Near T/O for C128	18
S168 (Diesel)	Near T/O for C128	18
S169 (Diesel)	Near T/O for C128	18
S170 (1.6L)	Near Fusible Link	N/S
S171 (1.6L)	Near Fusible Link	N/S
S172	Right Front Engine Compartment	1
S173	Left Rear Engine Compartment	1
S174 (Gas)	Left Front Fender	3
S174 (Diesel)	Right Front Fender	19
S175 (Gas)	Right Engine Compartment	1
S175 (Diesel)	Right Front Fender	19
S176 (LHD Diesel)	Left Rear Engine Compartment	12
S176 (RHD Diesel)	Near T/O for Ambient Temperature Sensor	19
S177	Top of Engine	24
S178	Left Engine	20
S179 (Export)	Near Right City Lamp	N/S
S180 (Export)	Near Left City Lamp	N/S
S191	Near T/O for EGR Solenoid	12, 15
S192	Near T/O for C125	12, 15
S195	Near Battery	7
S196	Near Battery	7
S201	Near T/O for Brake Transmission Shift Interlock Solenoid	27, 31
S203	Near Right Turn Signal Indicator	31
S204	Near T/O for A/C-Heater Control Module	30
S205	Near T/O for Rear Window Defogger Switch	30
S209	Near T/O for Rear Window Defogger and Rear Wiper Switches	30
S211	Near T/O for Front Wiper/Washer Switch and Multi-Function Switch	27
S212	Near T/O for Instrument Cluster - C1	27
S213	Near T/O for Rear Window Defogger and Rear Wiper Switches	30
S215 (LHD Autostick)	Near T/O for G201	27
S216	In T/O for Radio	30
S220	Near T/O for Brake Shift Interlock Solenoid	31
S224	Between S201 and S247	31
S225	Between T/O for Brake Shift Interlock Solenoid and Ignition Switch	27
S226	Between T/O for Brake Shift Interlock Solenoid and Ignition Switch	27

CONNECTOR/GROUND/SPLICE LOCATION (Continued)

SPLICE	LOCATION	FIG.
S228	Near T/O for Power Mirror Switch	33
S229	Near T/O for Grounds G200 and G203	31
S232 (LHD)	In T/O for C203	29
S233	Near T/O for Turn Signal Indicators	29, 31, 32
S235 (RHD)	In T/O for Inline C202	32
S237 (LHD)	Near T/O for Instrument Cluster - C1	27
S239	Near T/O for Ground G200/G203	31
S240	Near T/O for Ground G201	28, 33
S241	Near T/O for Ground G200/G203	31
S242 (RHD)	In T/O for Power Mirror Switch	33
S244	Near T/O for Visor/Vanity Lamp	N/S
S246	Between Splices S248 and S244	N/S
S247	Near T/O for Brake Transmission Shift Interlock Solenoid	31
S248	Near T/O for Overhead Console	N/S
S249	In T/O for Overhead Console	N/S
S250	In T/O for Power Mirror Switch	28
S254 (RHD)	Near T/O for Instrument Cluster - C1	27
S256 (RHD)	In T/O for Instrument Cluster C1	33
S260	In T/O for Radio	30
S301	Front of Left Rear Wheel Housing	45
S302	In Trough Near Left Rear Door	45
S304	Top of Left Rear Wheel Housing	46
S305	Near T/O for Left Rear Door Ajar Switch	46
S306	Near T/O for License Lamp	N/S
S307	Near T/O for Left Rear Door Ajar Switch	46
S308	Near T/O for License Lamp	N/S
S309 (Left Door)	Near T/O for Left/Right Front Door Lock Switch	38
S310	Near T/O for Rear Window Defogger (Ground)	N/S
S311 (Right Door)	Near T/O for Left/Right Front Door Lock Switch	38
S312	Near T/O for Licence Lamp	N/S
S313	Near T/O for Passenger Heated Seat Module	N/S
S314	Near T/O for Passenger Heated Seat Module	N/S
S315	Near T/O for Passenger Heated Seat Module	N/S
S316	Near T/O for Passenger Heated Seat Module	N/S
S317	Below Driver Seat	N/S
S318 (Export)	Near T/O for C108	N/S
S319	Near T/O for C107	N/S
S320	On Fuel Tank in T/O for Natural Vacuum Leak Detection Pump	49
S321	Near Left Rear Power Window Switch	N/S

CONNECTOR/GROUND/SPLICE LOCATION (Continued)

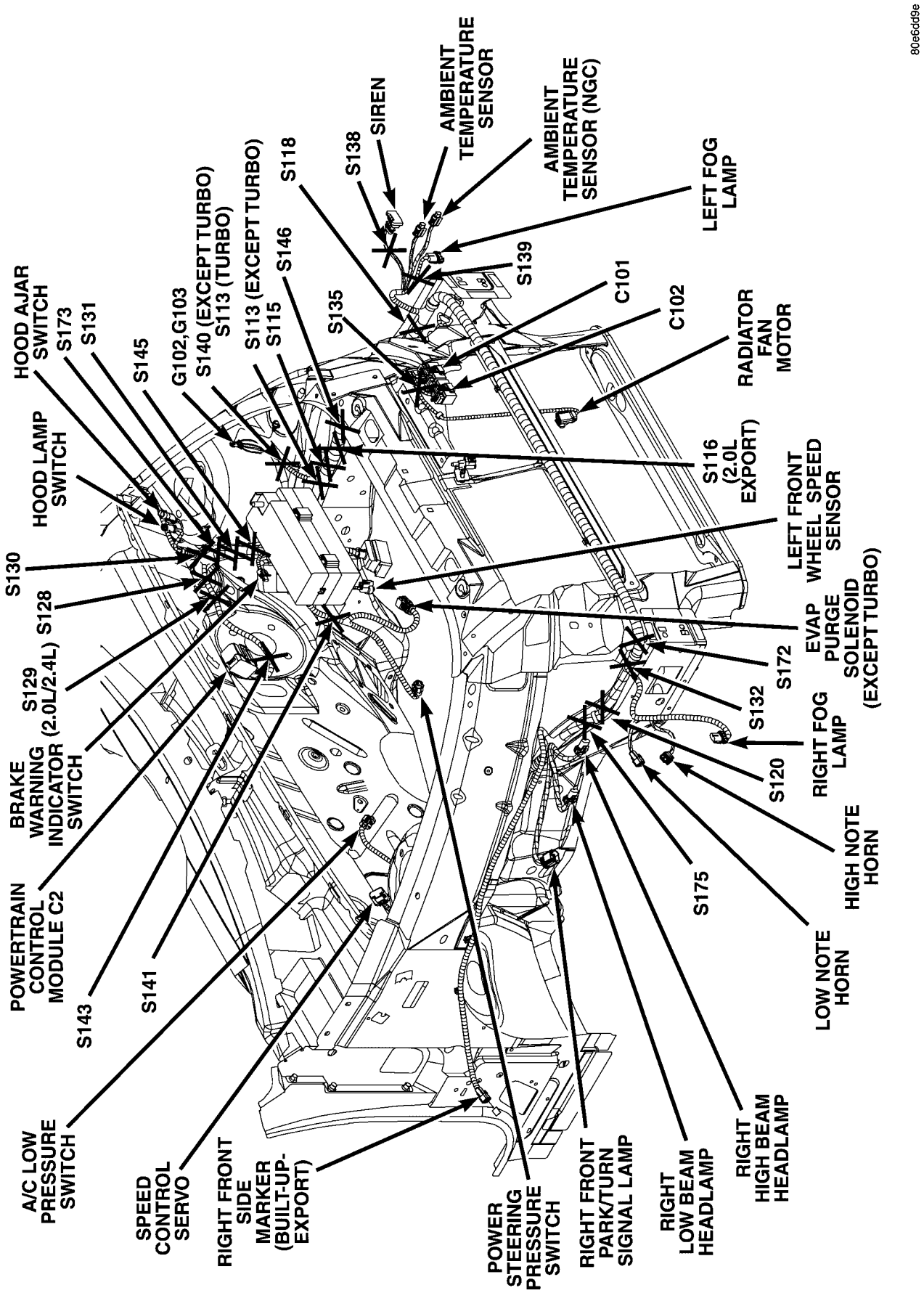

Fig. 1 ENGINE COMPARTMENT (GAS)

CONNECTOR/GROUND/SPLICE LOCATION (Continued)

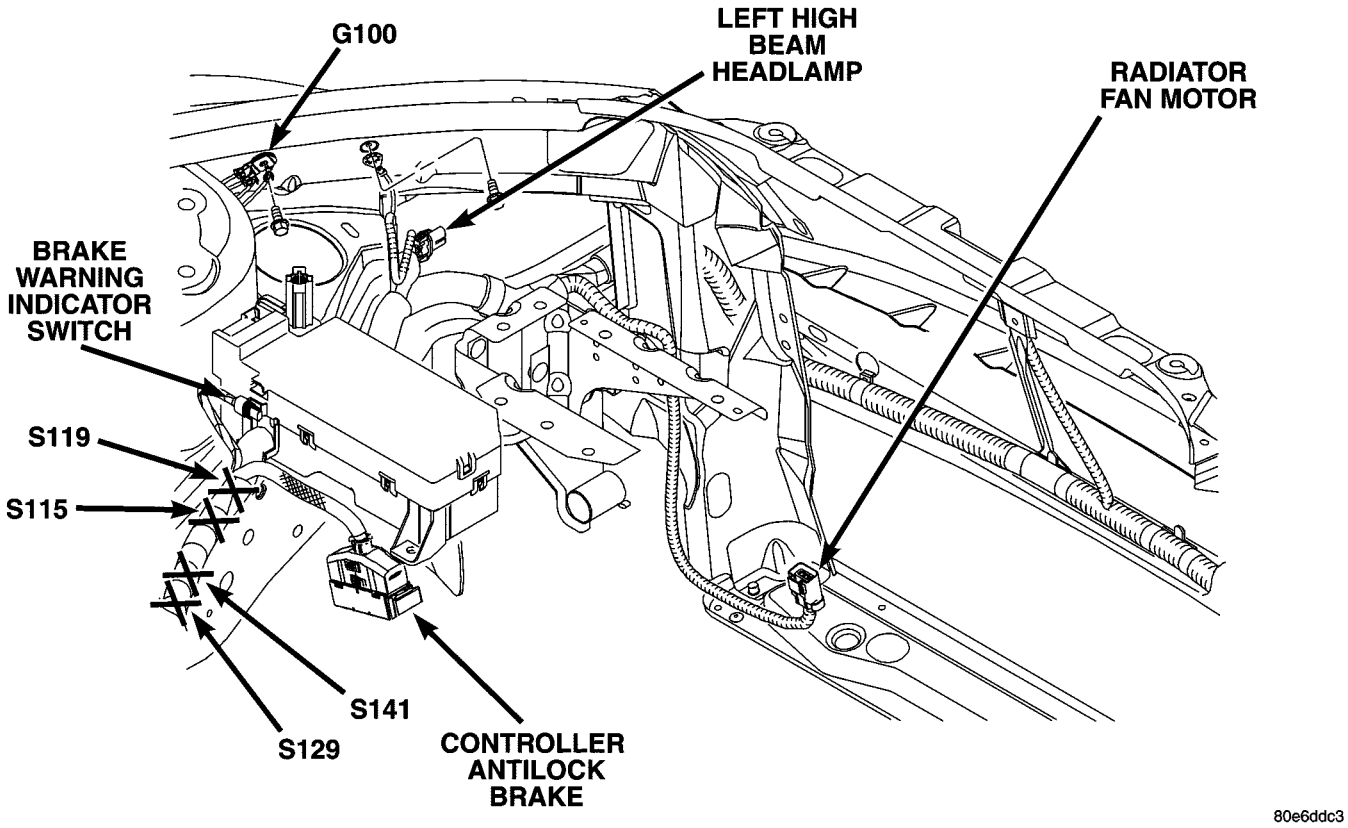

Fig. 2 LEFT FRONT ENGINE COMPARTMENT (1.6L)

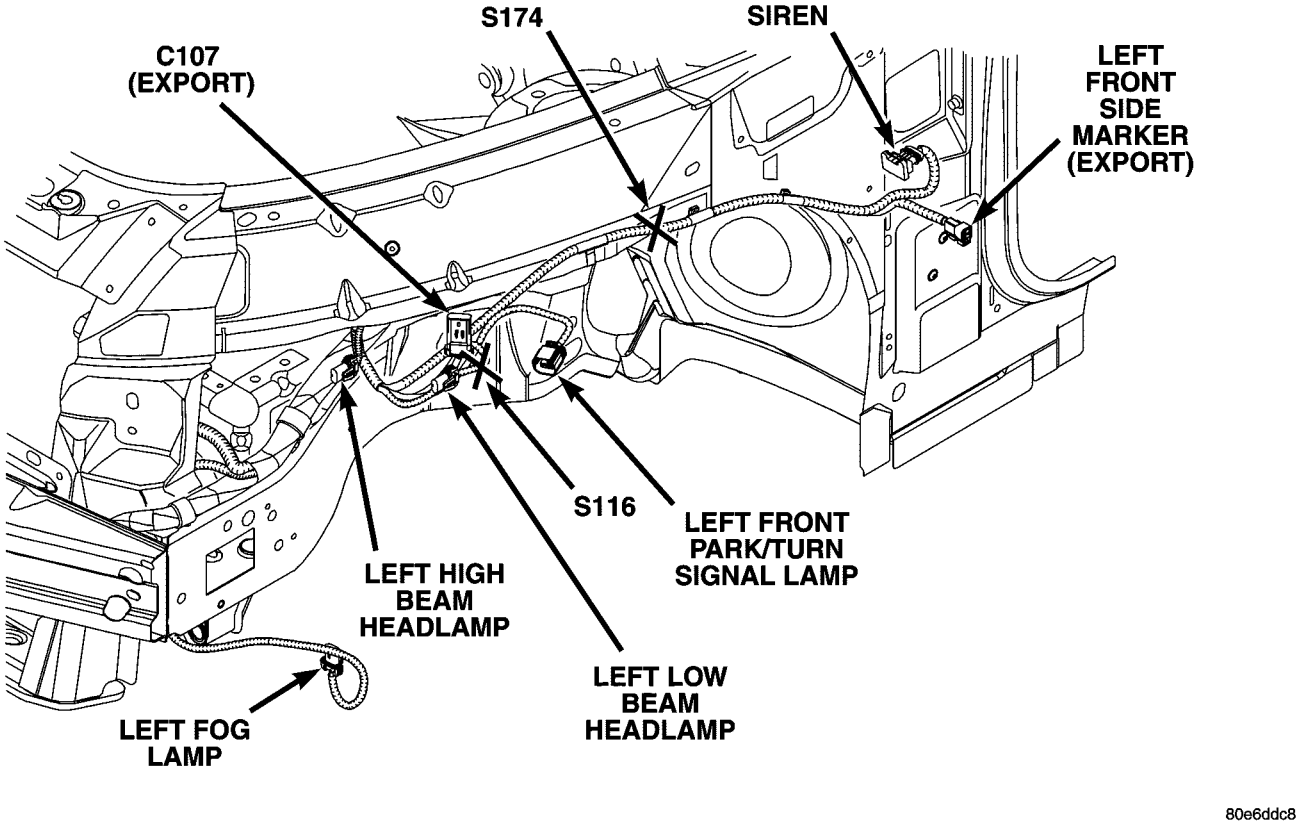

Fig. 3 LEFT SIDE OF ENGINE COMPARTMENT (1.6L)

CONNECTOR/GROUND/SPLICE LOCATION (Continued)

80e6dd5

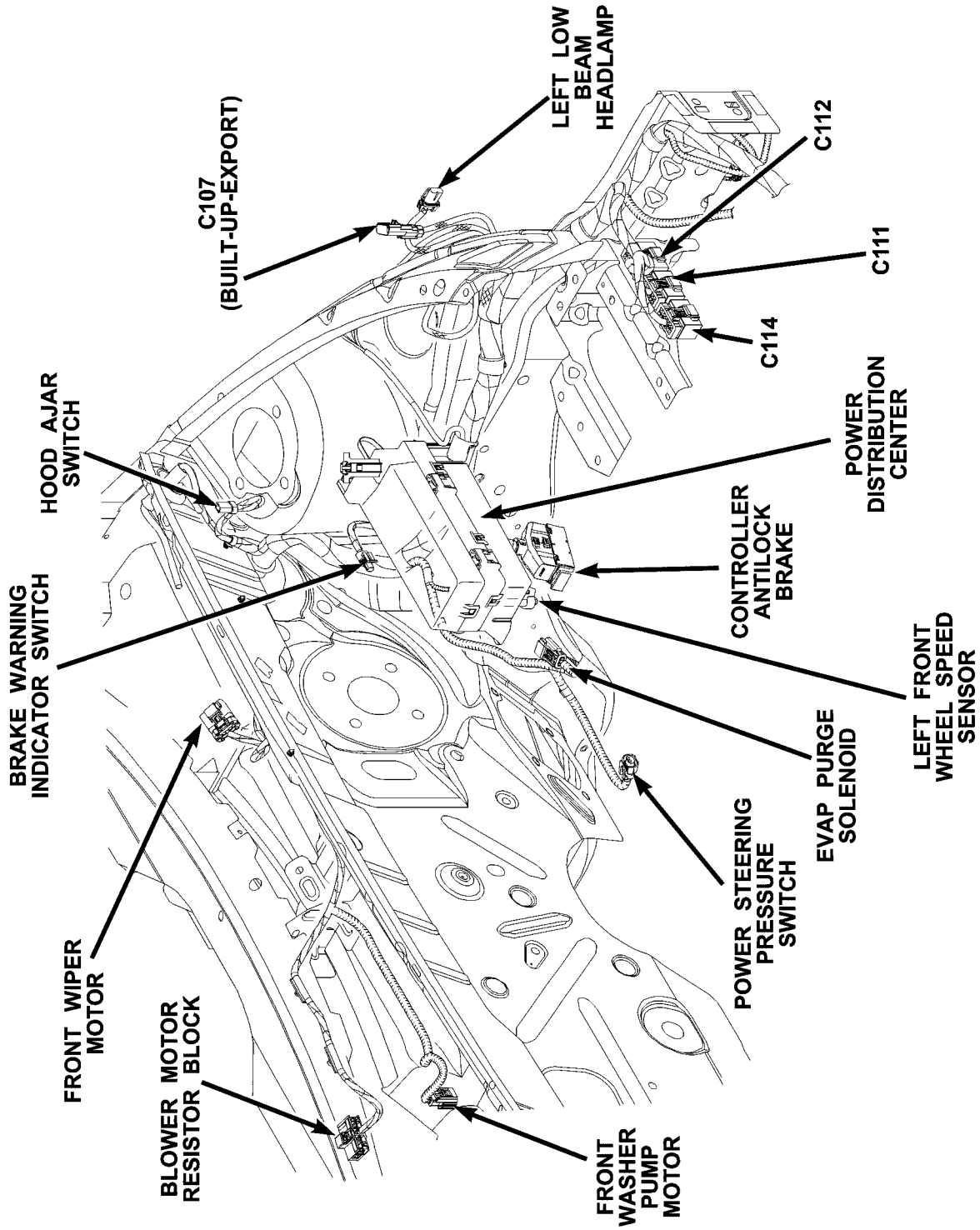

Fig. 4 LEFT SIDE ENGINE COMPARTMENT (1.6L)

CONNECTOR/GROUND/SPLICE LOCATION (Continued)

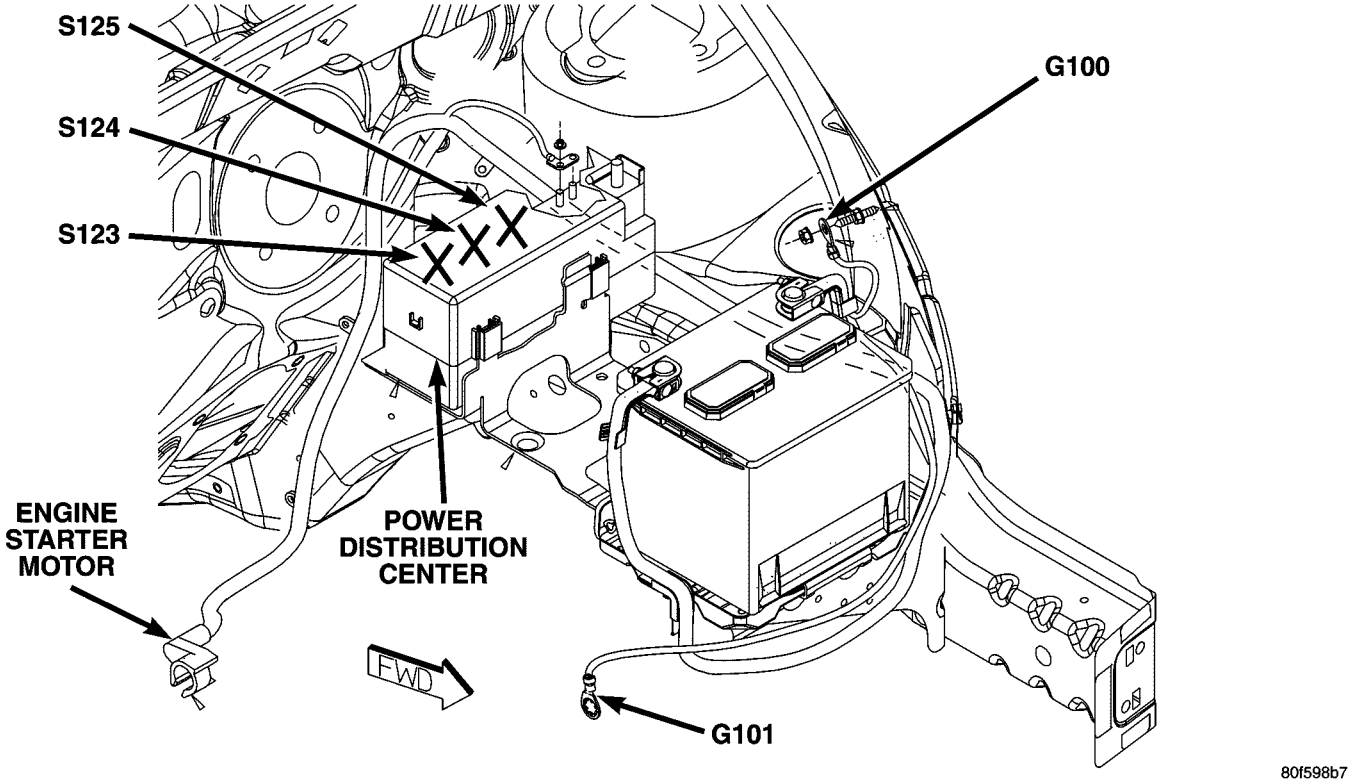

Fig. 5 LEFT FRONT ENGINE COMPARTMENT (1.6L)

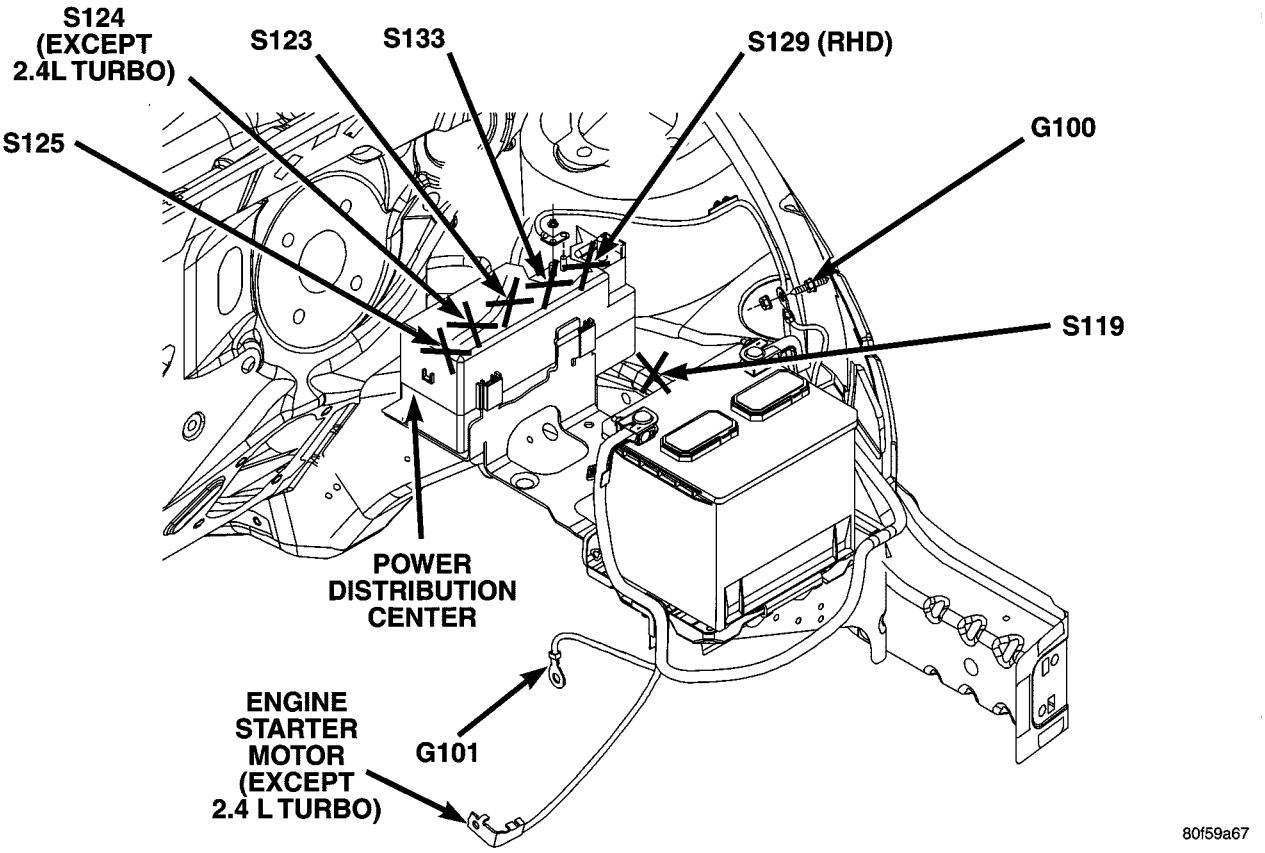

Fig. 6 LEFT FRONT ENGINE COMPARTMENT (2.0L/2.4L)

CONNECTOR/GROUND/SPLICE LOCATION (Continued)

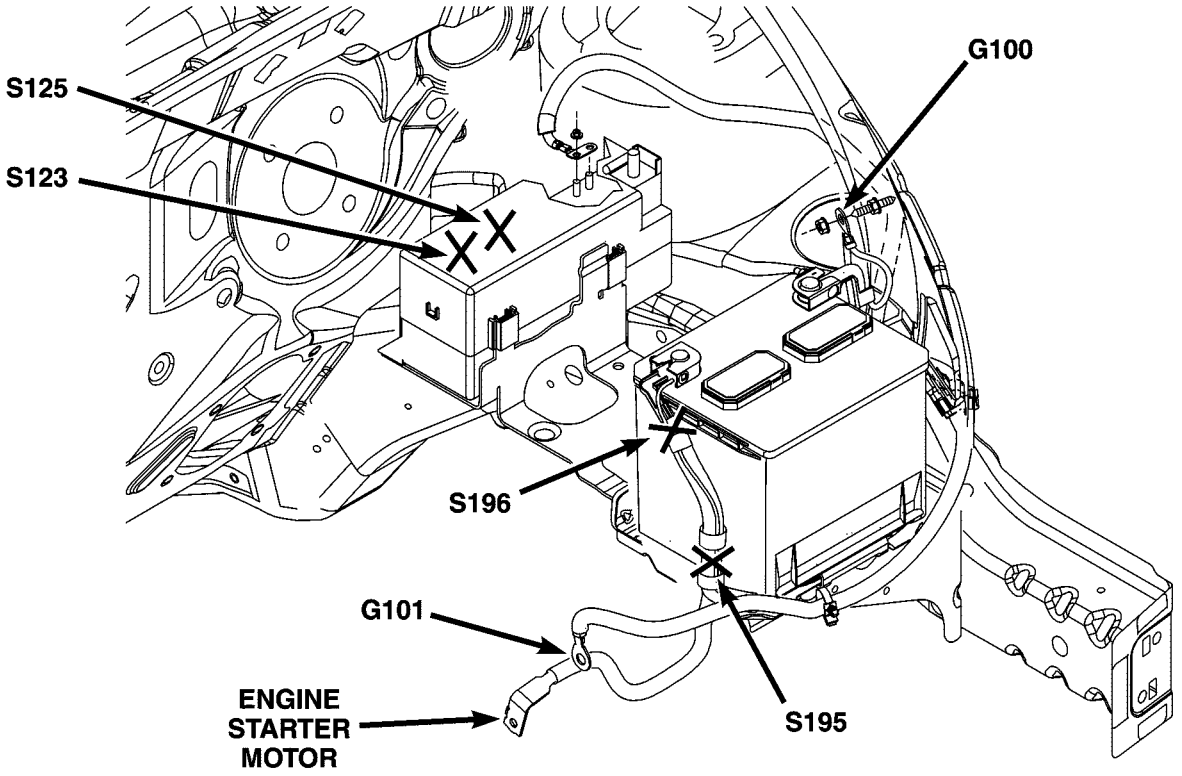

Fig. 7 LEFT FRONT ENGINE COMPARTMENT (2.4L TURBO)

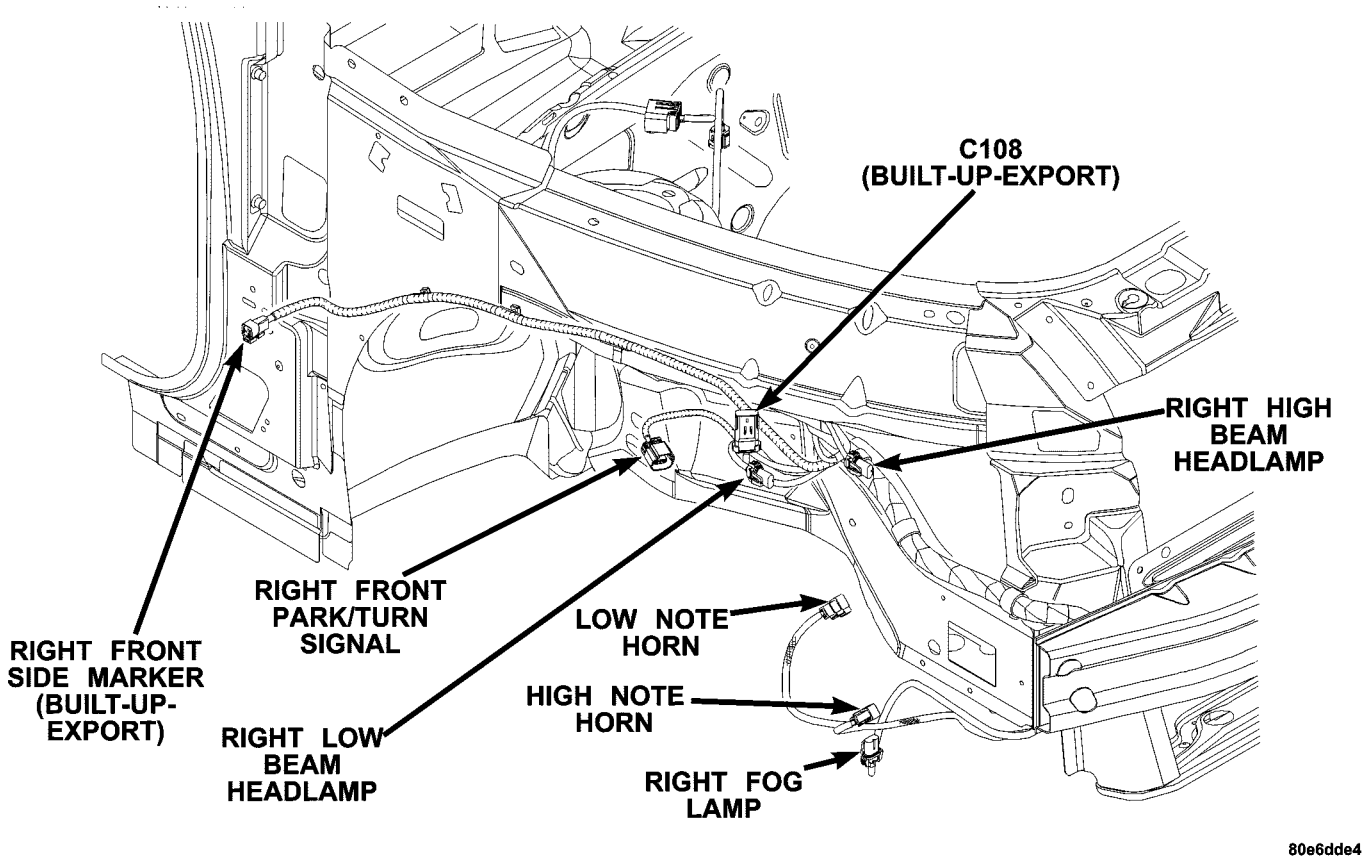

Fig. 8 RIGHT FRONT ENGINE COMPARTMENT (1.6L)

CONNECTOR/GROUND/SPLICE LOCATION (Continued)

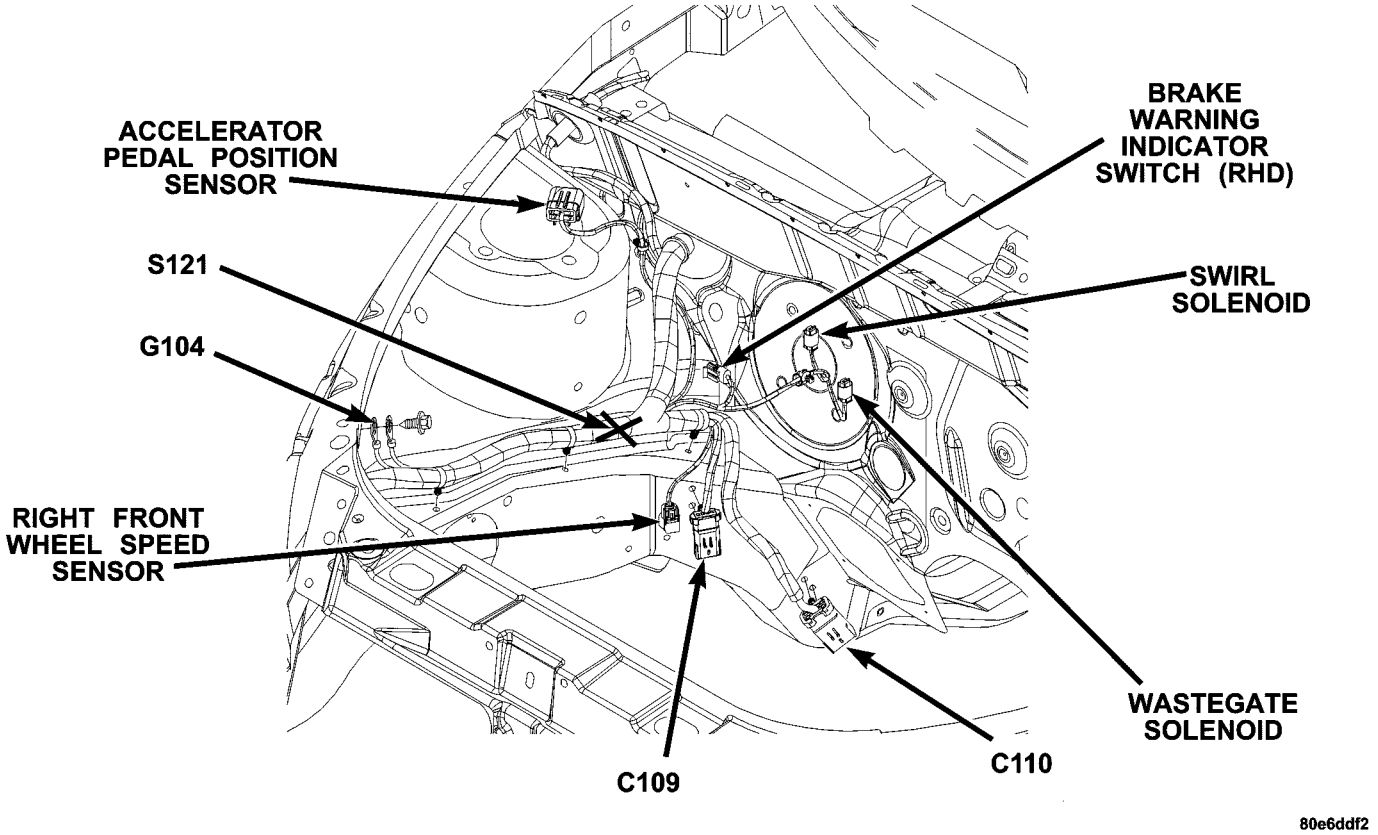

Fig. 9 RIGHT SIDE ENGINE COMPARTMENT (DIESEL RHD)

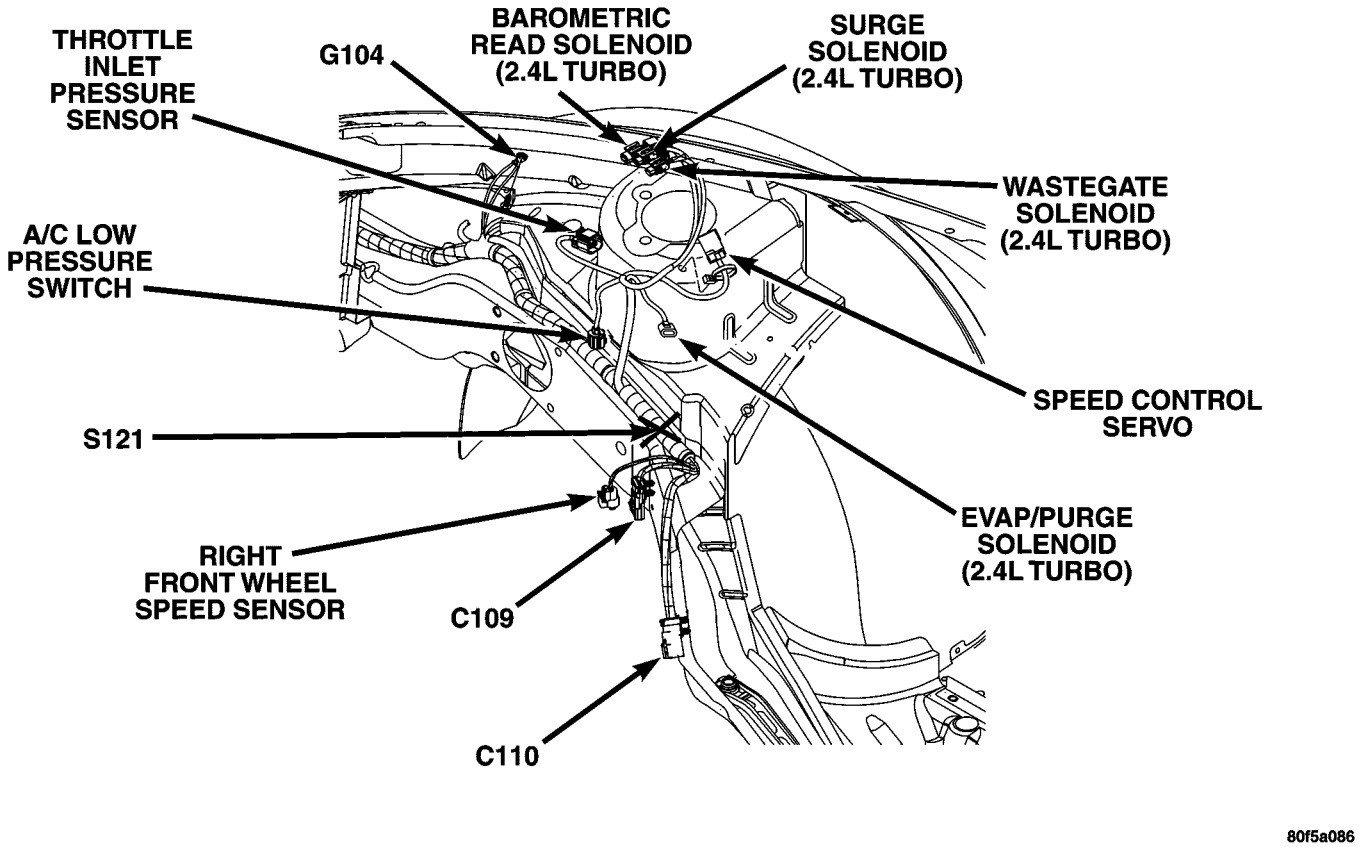

Fig. 10 RIGHT REAR ENGINE COMPARTMENT (2.0L/2.4L)

CONNECTOR/GROUND/SPLICE LOCATION (Continued)

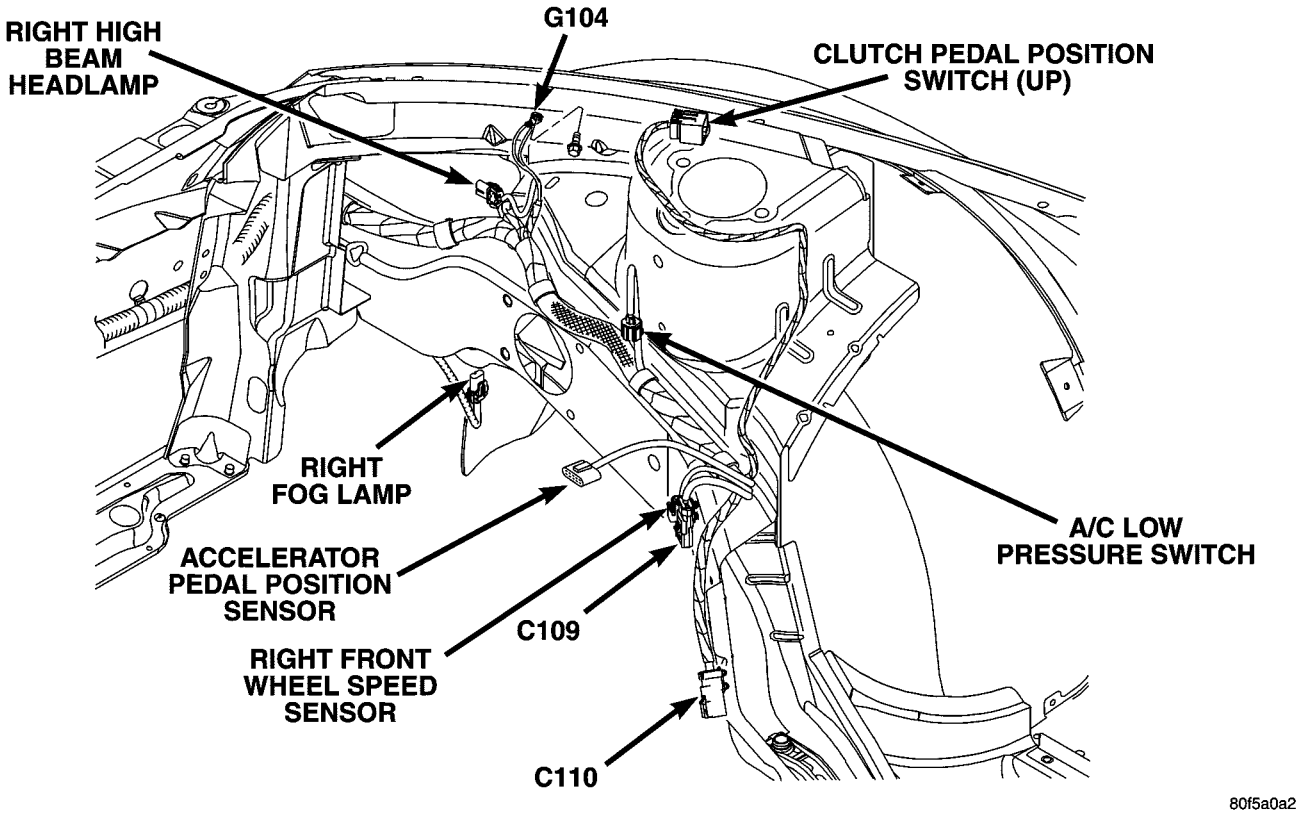

Fig. 11 RIGHT REAR ENGINE COMPARTMENT (1.6L)

CONNECTOR/GROUND/SPLICE LOCATION (Continued)

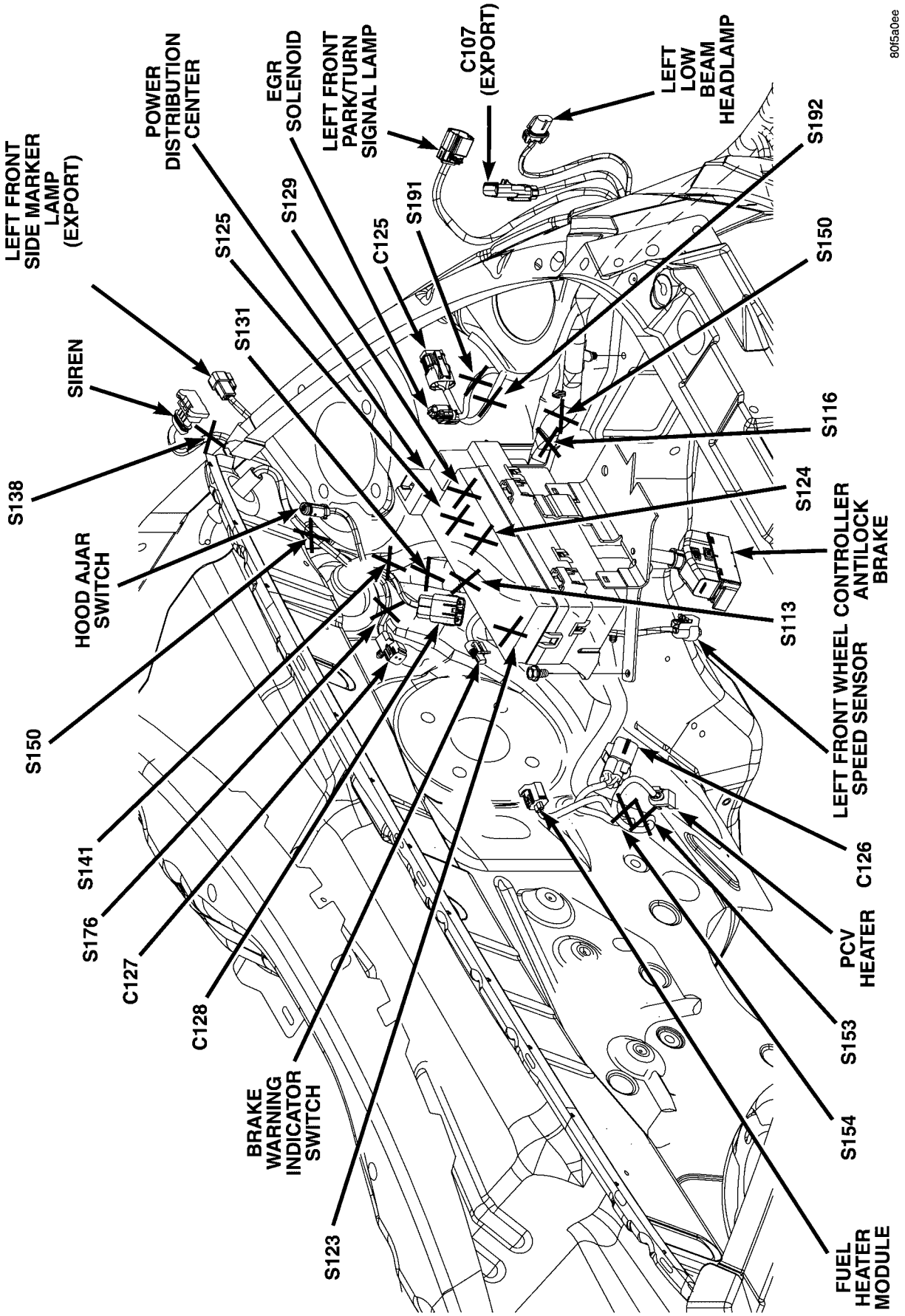

Fig. 12 REAR ENGINE COMPARTMENT (LHD DIESEL)

CONNECTOR/GROUND/SPLICE LOCATION (Continued)

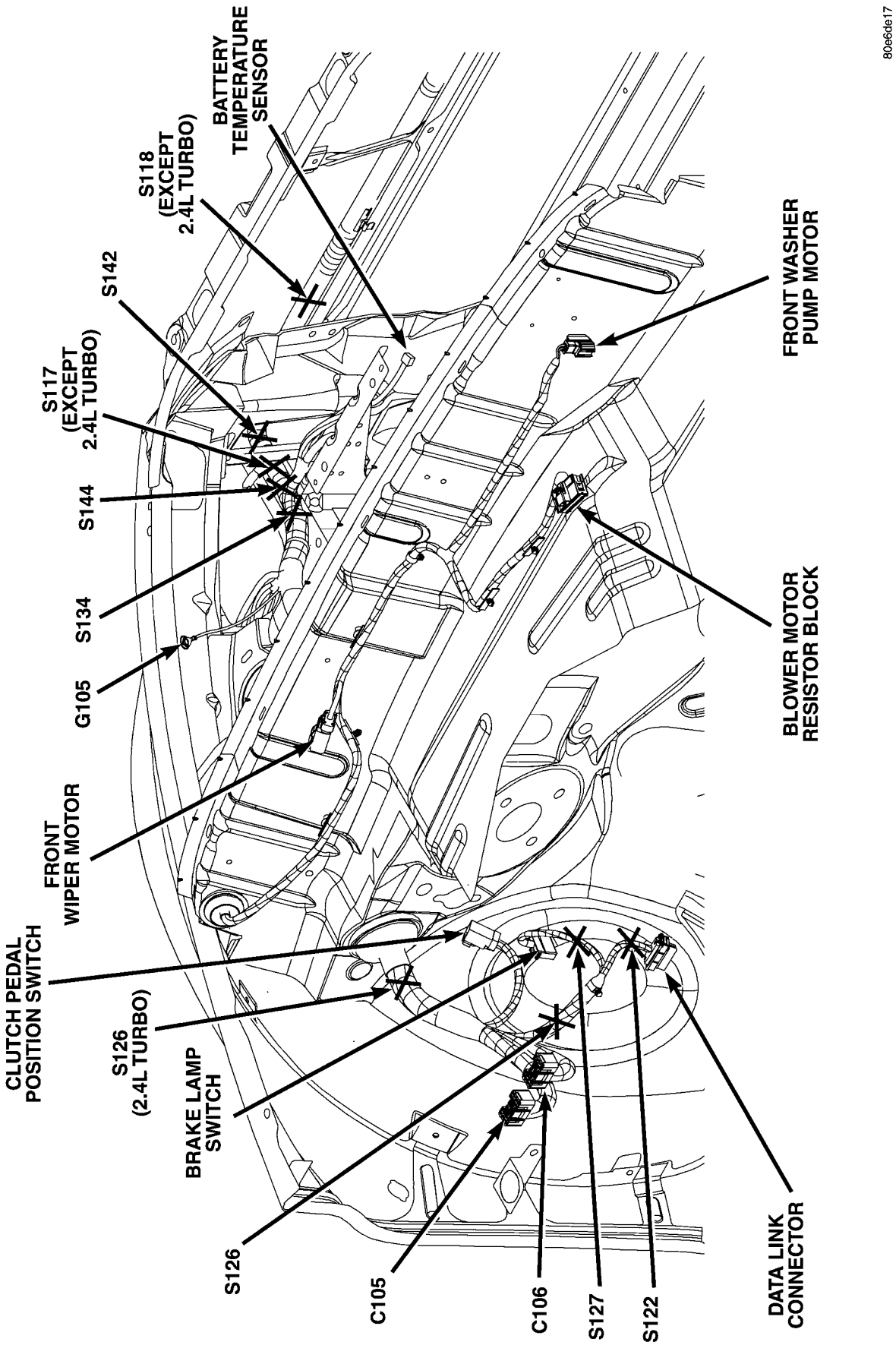

Fig. 13 LEFT SIDE COWL PANEL (GAS)

CONNECTOR/GROUND/SPLICE LOCATION (Continued)

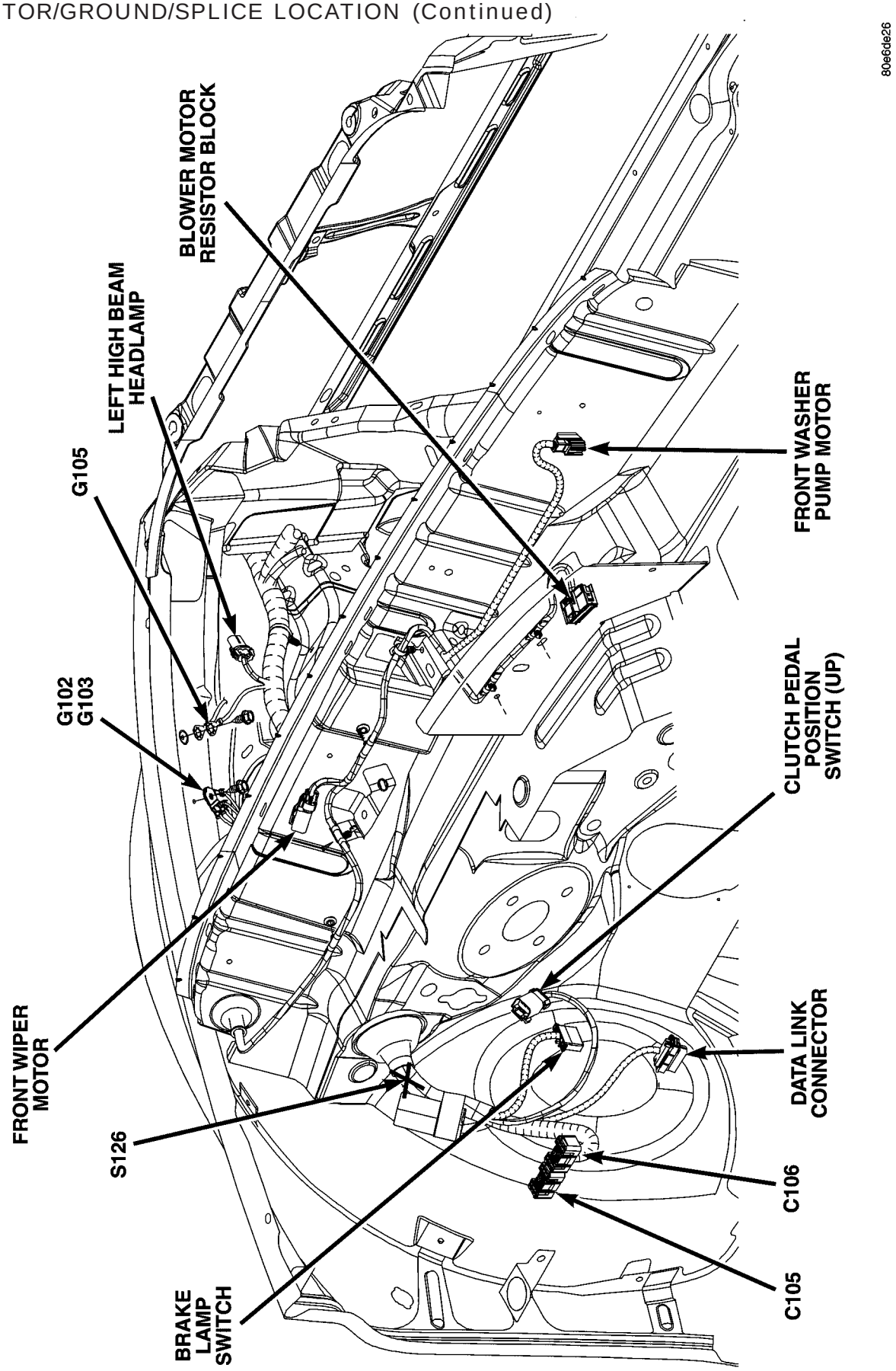

Fig. 14 LEFT SIDE COWL PANEL (LHD DIESEL)

CONNECTOR/GROUND/SPLICE LOCATION (Continued)

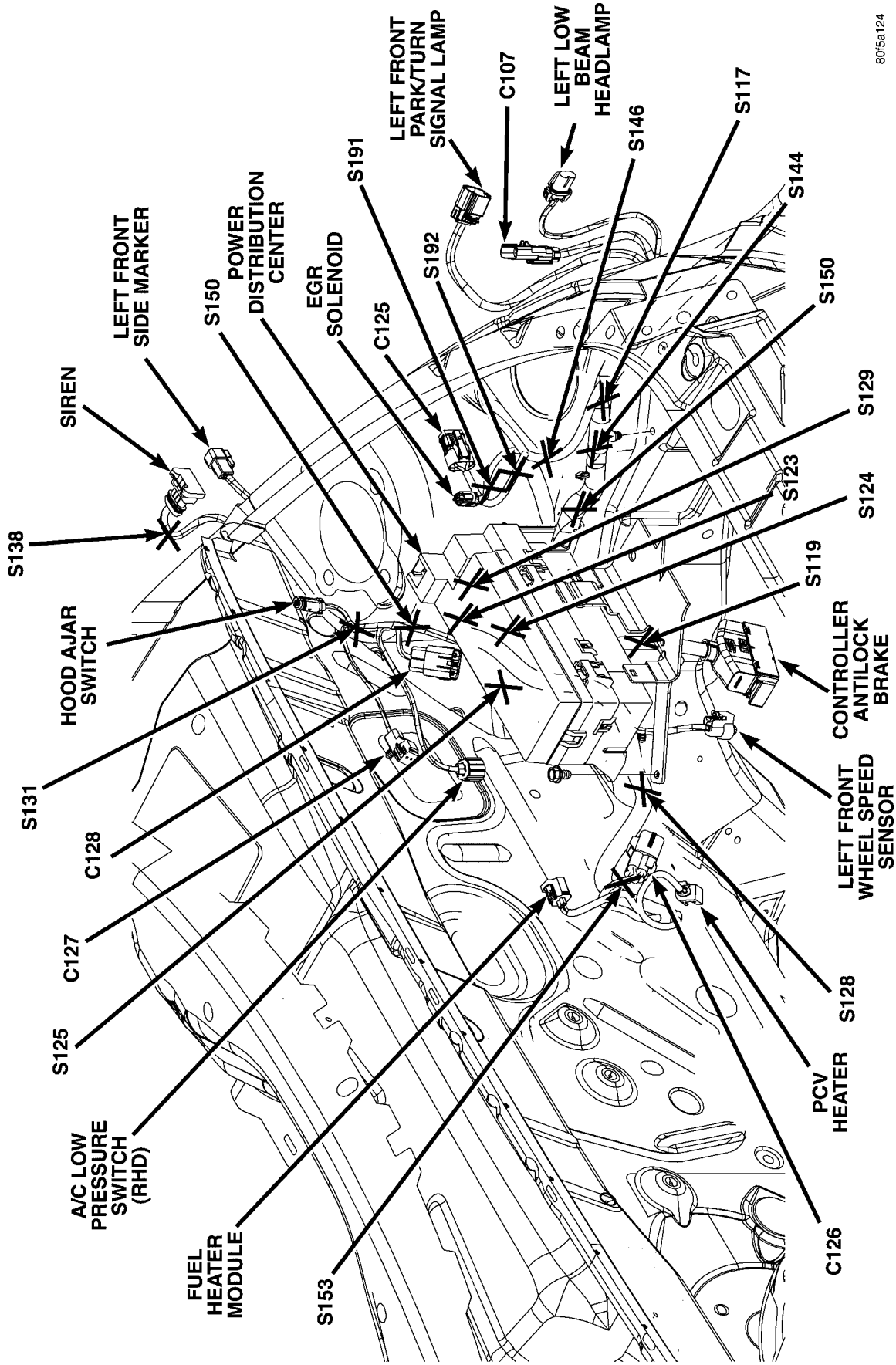

Fig. 15 REAR ENGINE COMPARTMENT (RHD DIESEL)

CONNECTOR/GROUND/SPLICE LOCATION (Continued)

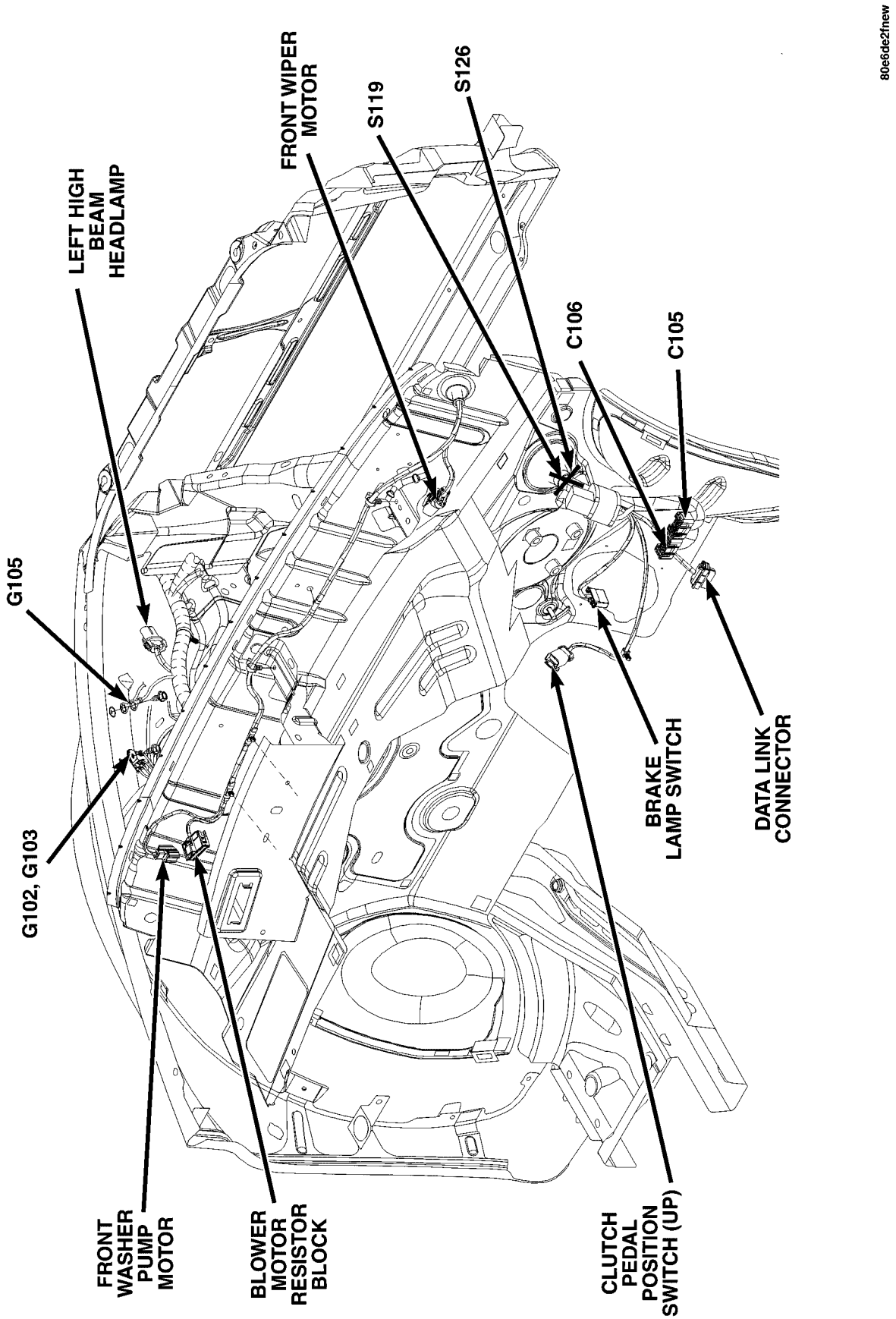

Fig. 16 RIGHT SIDE COWL PANEL (DIESEL RHD)

CONNECTOR/GROUND/SPLICE LOCATION (Continued)

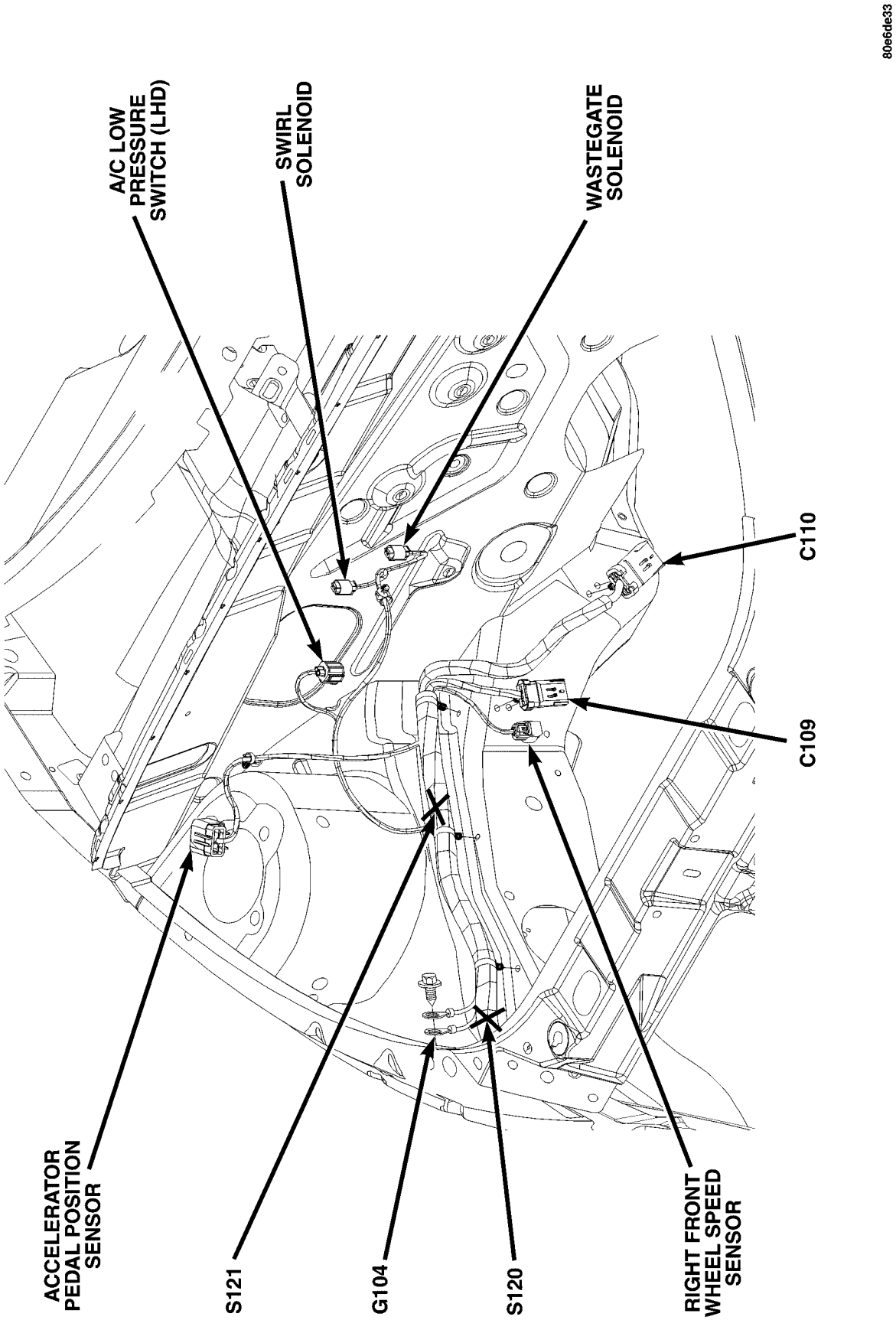

Fig. 17 RIGHT REAR ENGINE COMPARTMENT (DIESEL LHD)

CONNECTOR/GROUND/SPLICE LOCATION (Continued)

80e6de4e

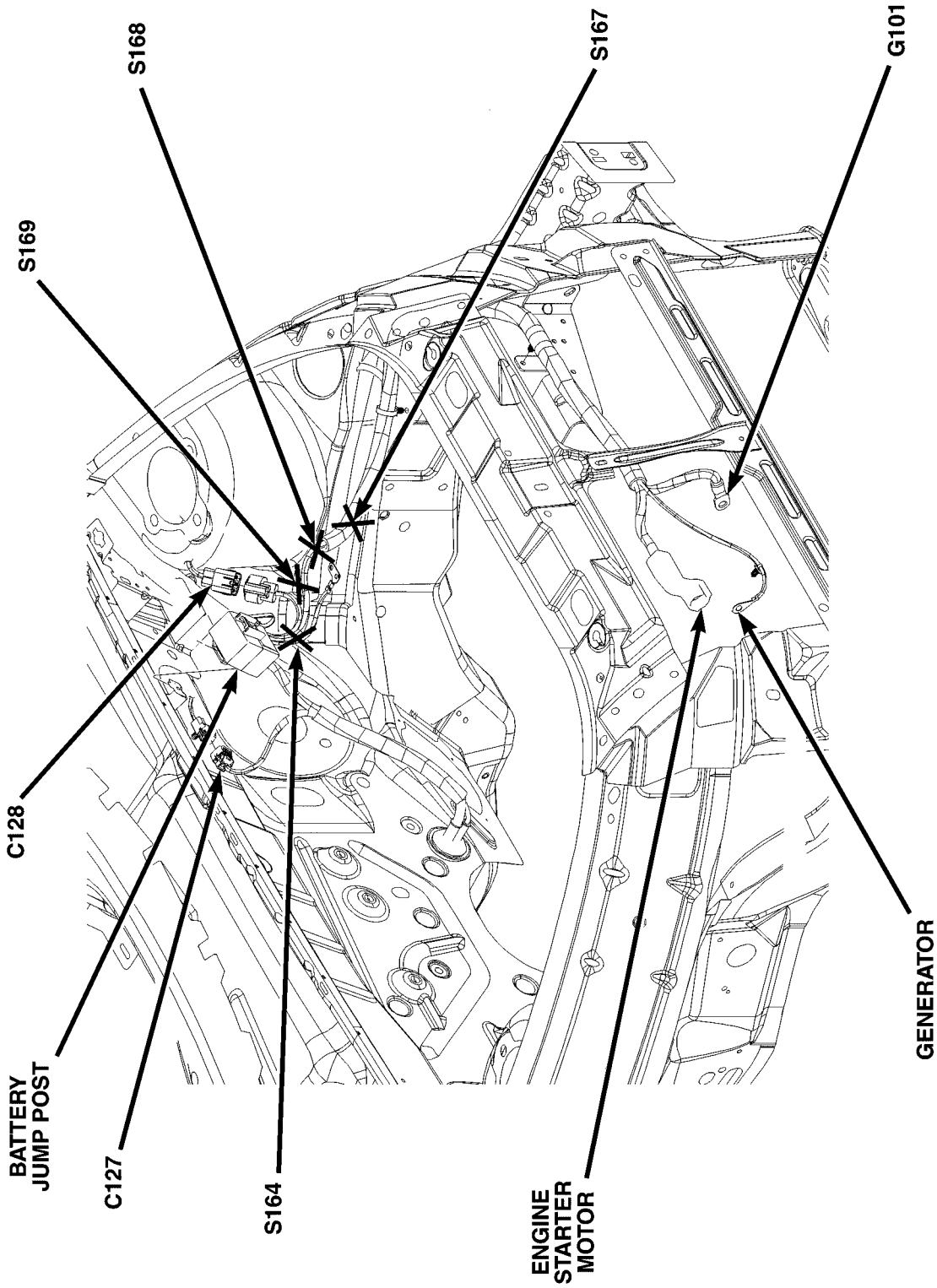

Fig. 18 ENGINE COMPARTMENT (DIESEL)

CONNECTOR/GROUND/SPLICE LOCATION (Continued)

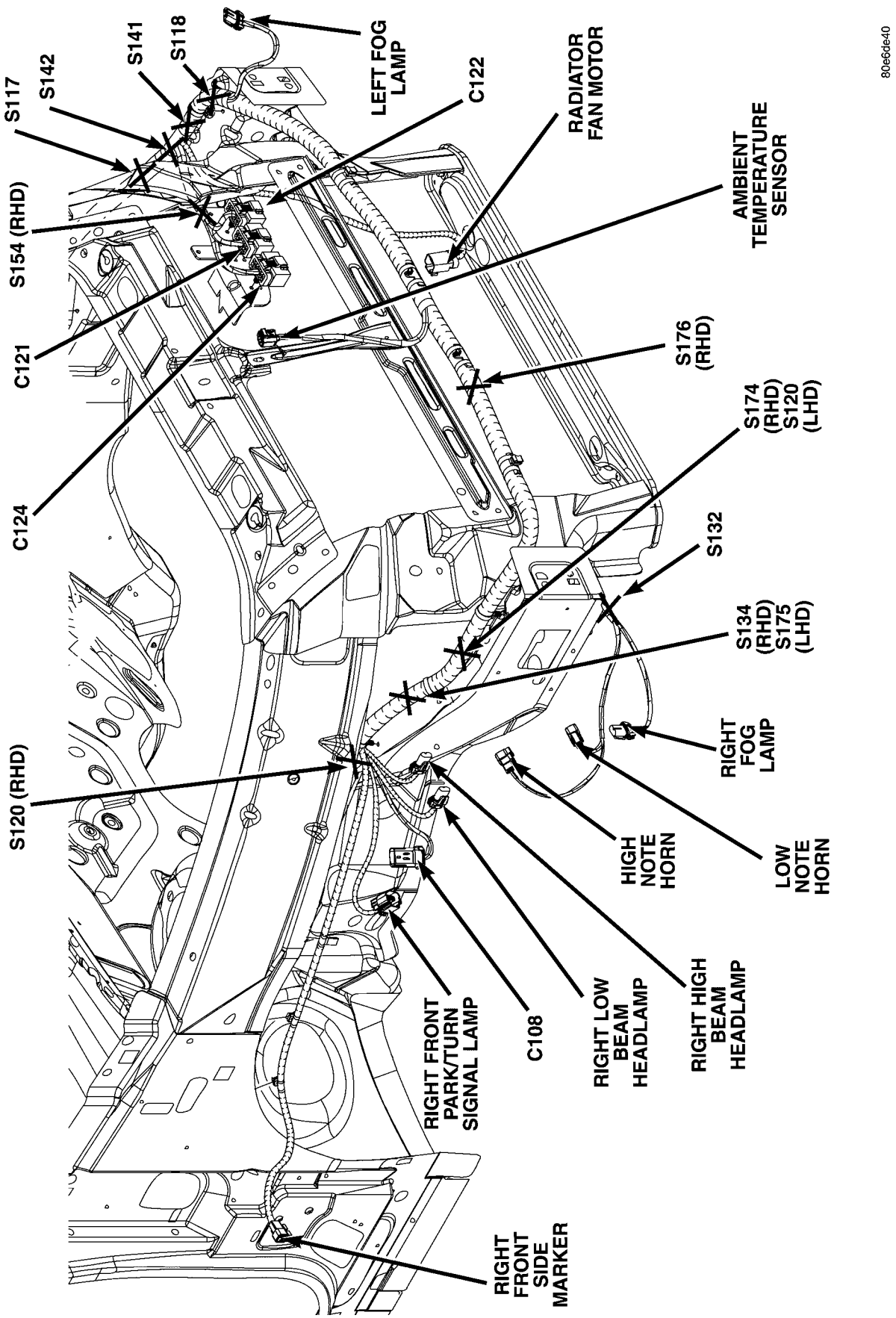

Fig. 19 RIGHT FRONT SIDE ENGINE COMPARTMENT (DIESEL)

CONNECTOR/GROUND/SPLICE LOCATION (Continued)

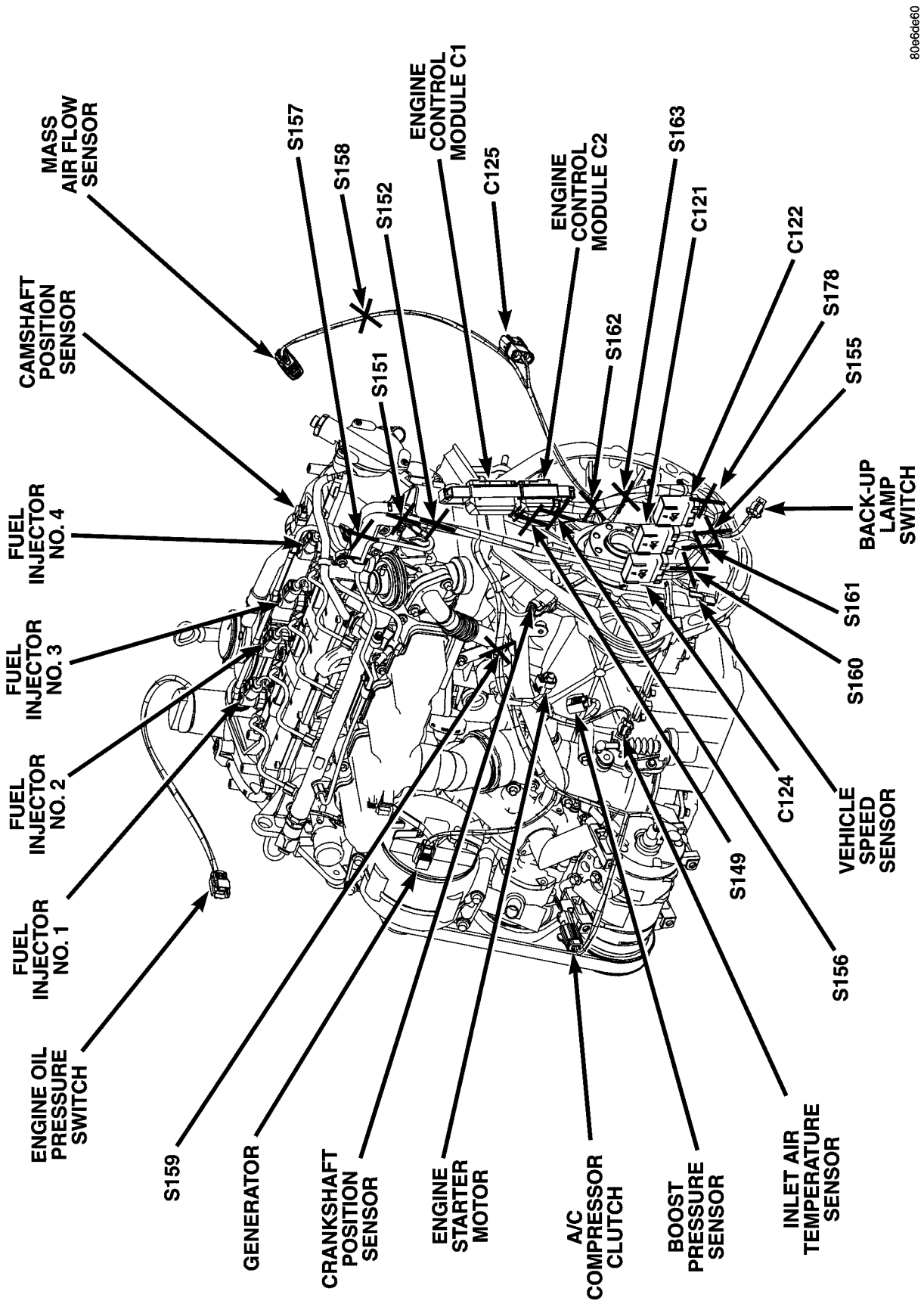

Fig. 20 DIESEL ENGINE

CONNECTOR/GROUND/SPLICE LOCATION (Continued)

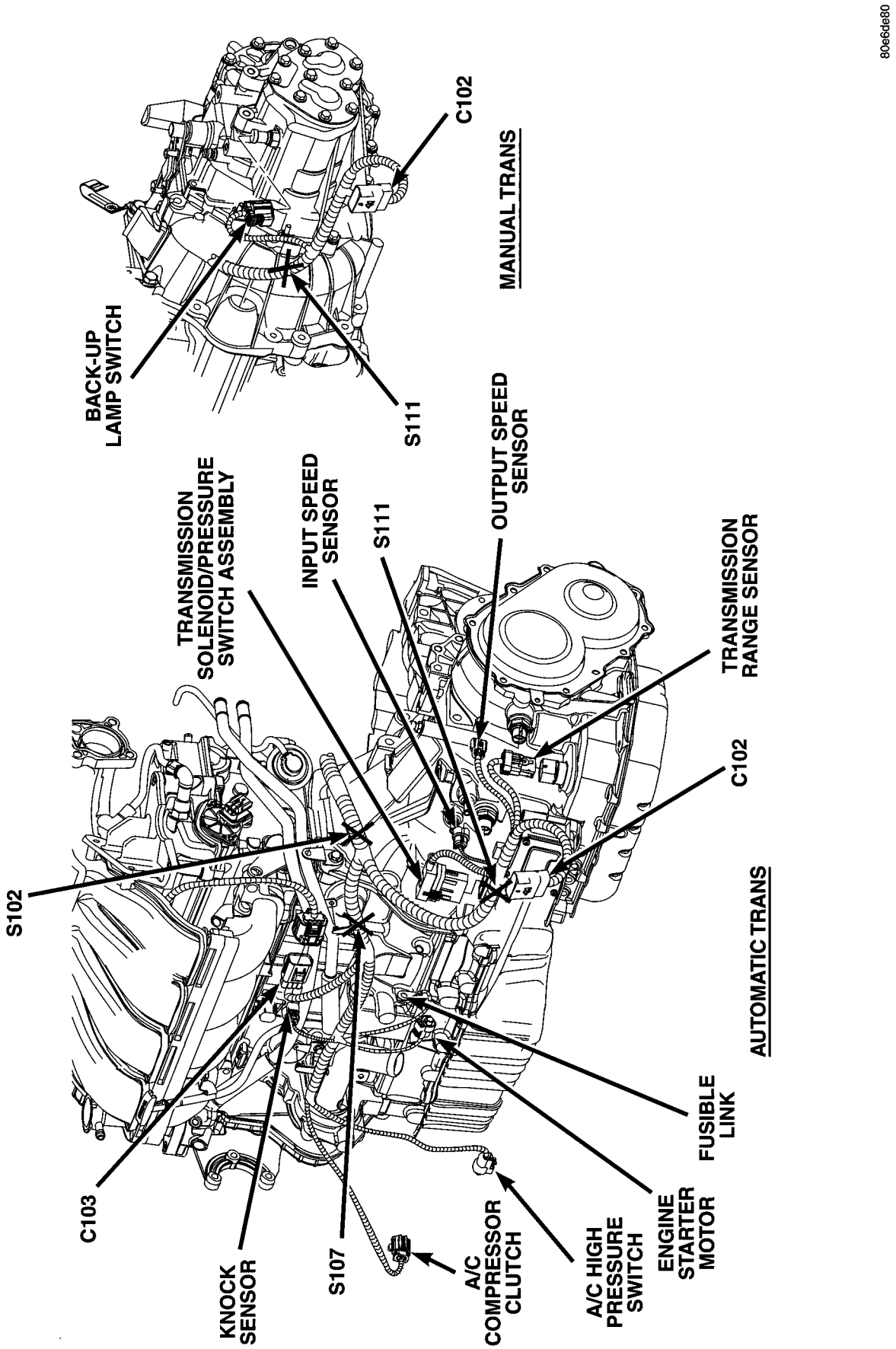

Fig. 21 2.0L/2.4L ENGINE /TRANSMISSION ASSEMBLY

CONNECTOR/GROUND/SPLICE LOCATION (Continued)

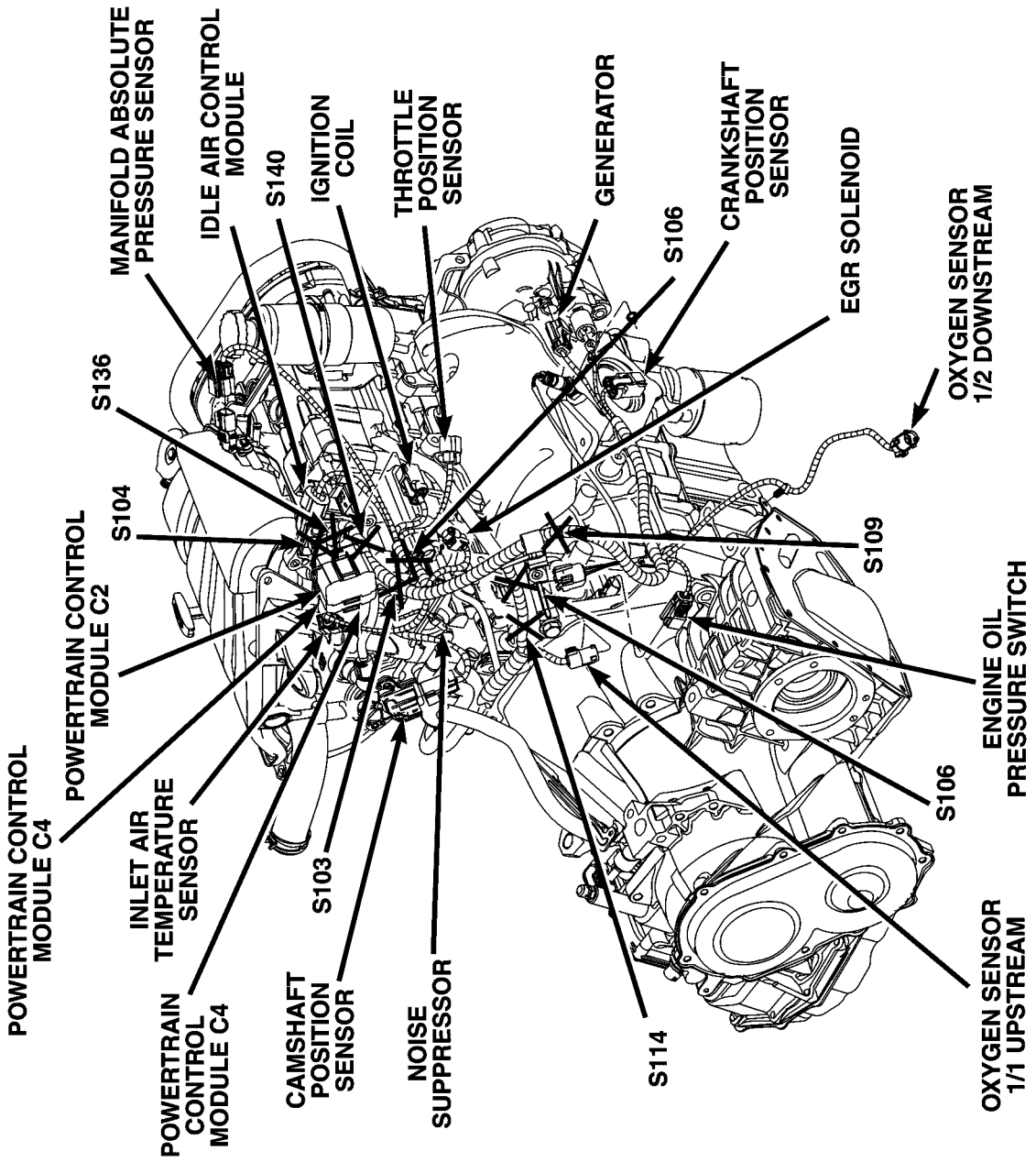

Fig. 22 2.0L/2.4L ENGINE

CONNECTOR/GROUND/SPLICE LOCATION (Continued)

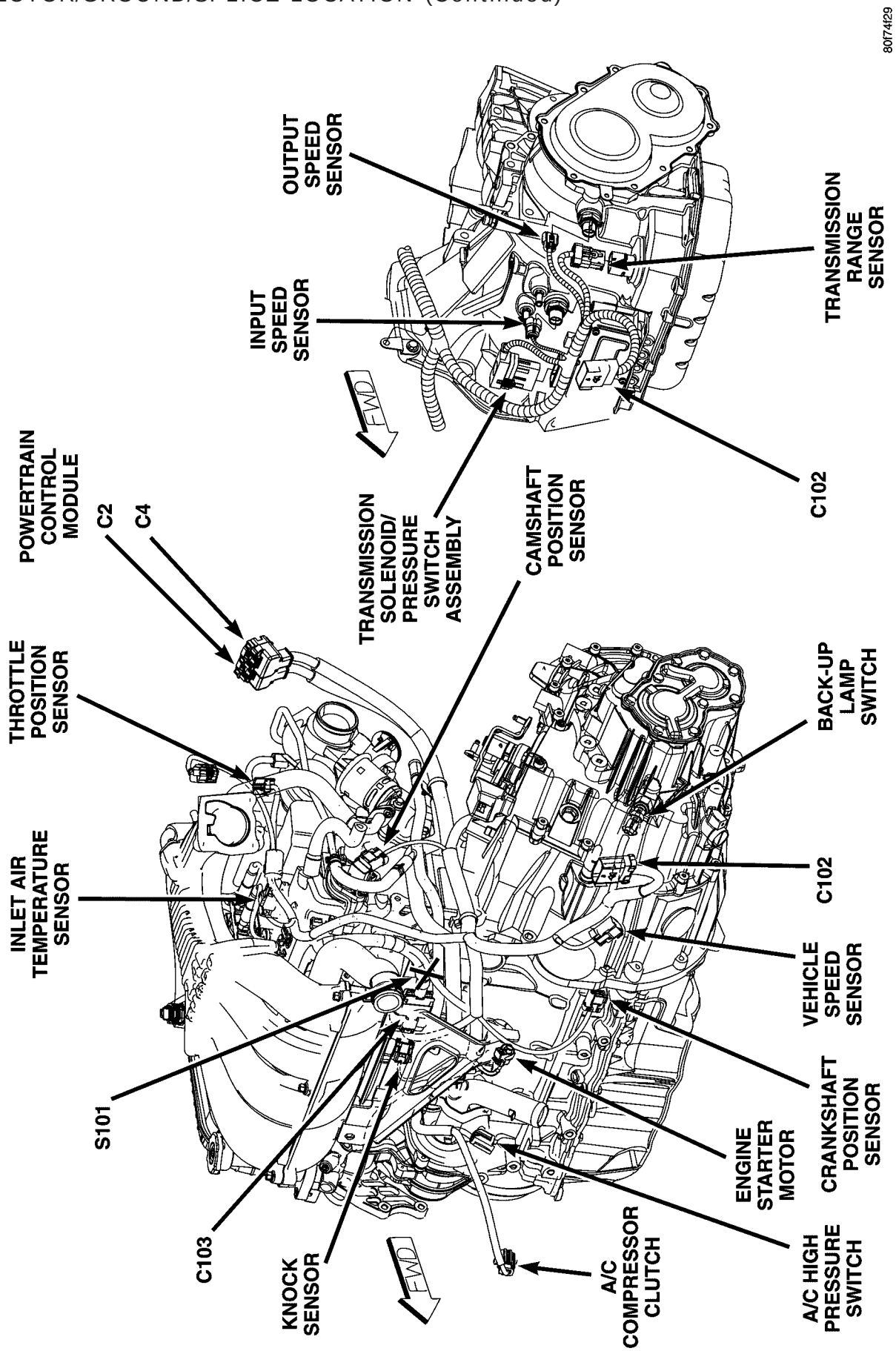

Fig. 23 2.4L TURBO ENGINE (LEFT)

CONNECTOR/GROUND/SPLICE LOCATION (Continued)

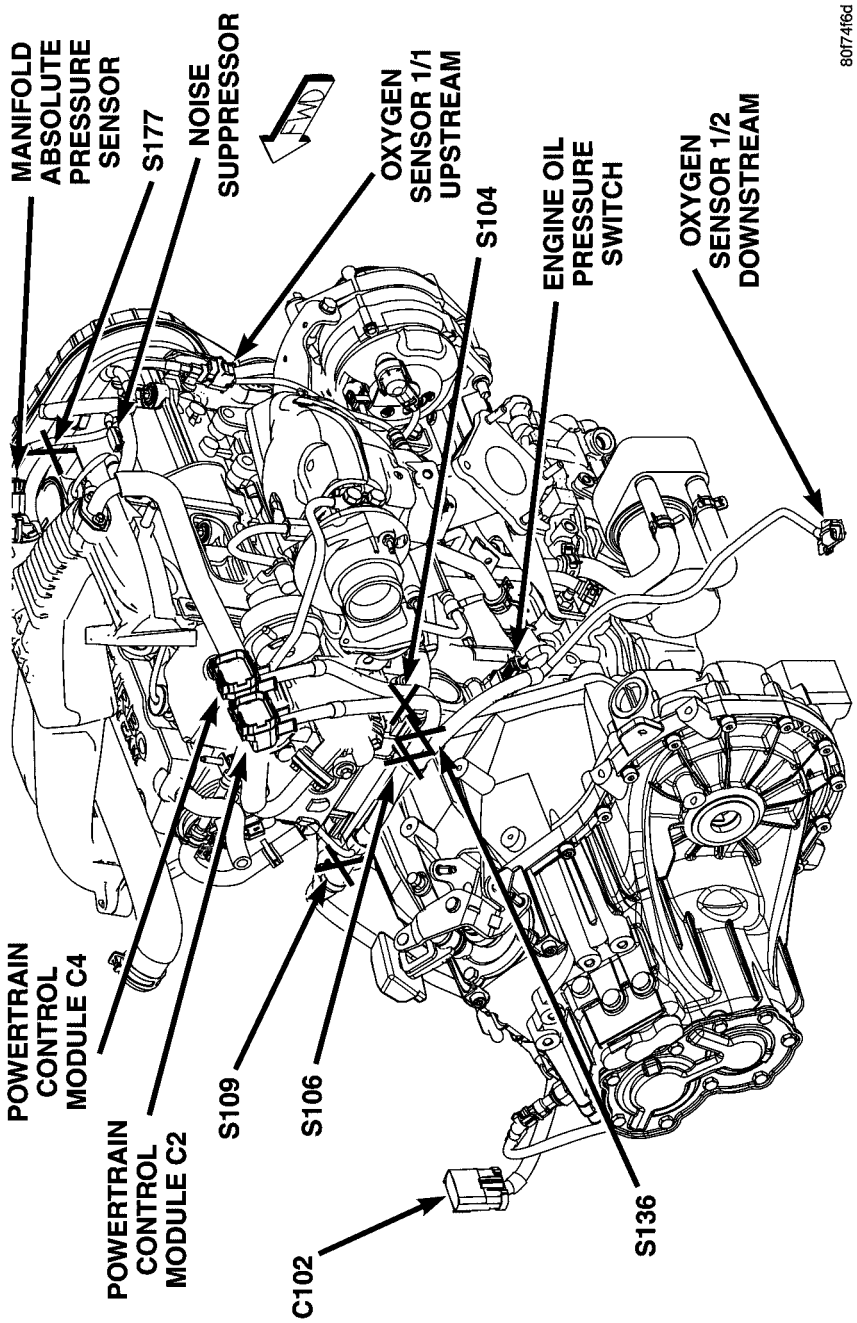

Fig. 24 2.4L TURBO ENGINE (REAR)

CONNECTOR/GROUND/SPLICE LOCATION (Continued)

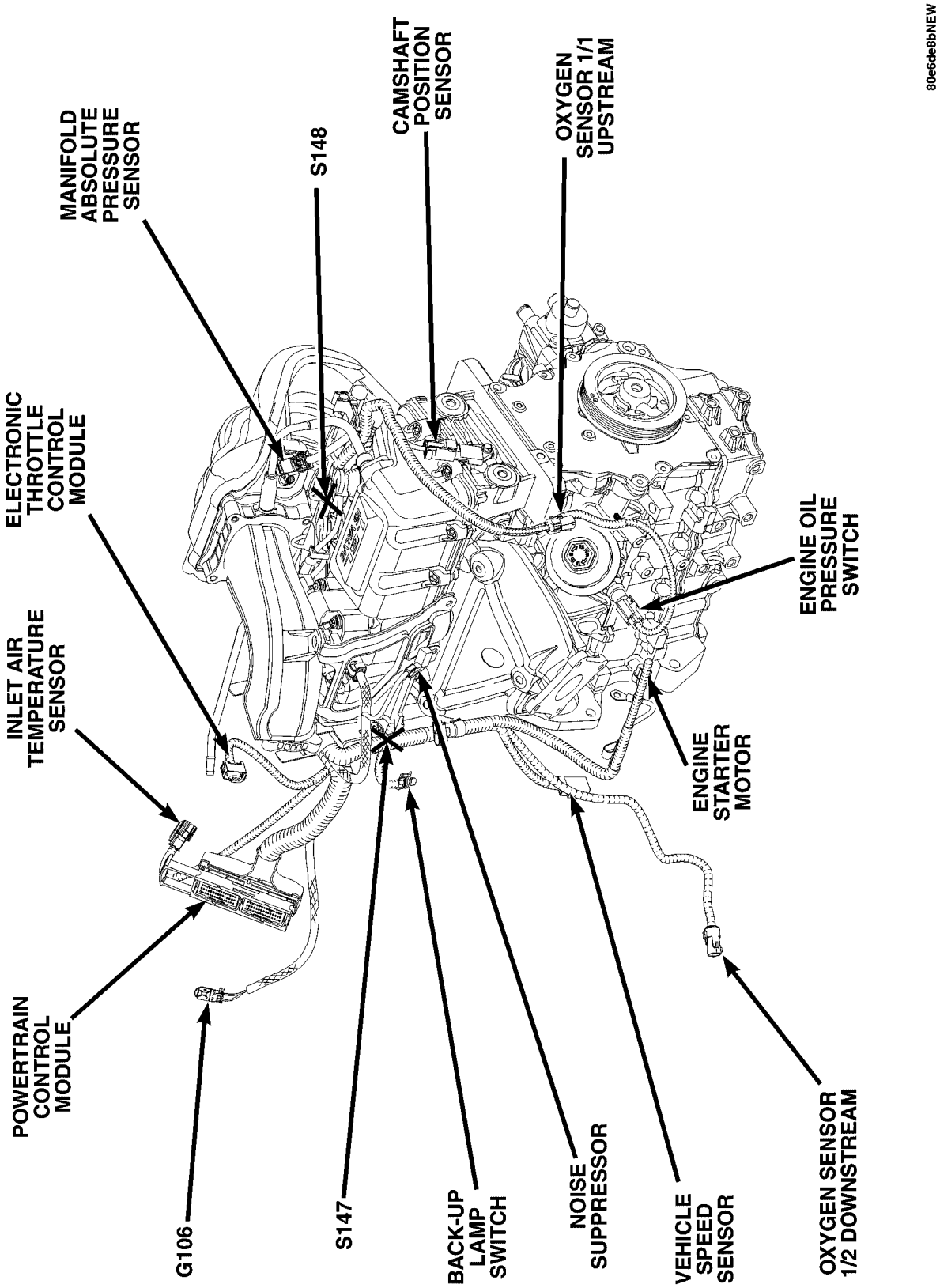

Fig. 25 ENGINE 1.6L (RIGHT SIDE)

CONNECTOR/GROUND/SPLICE LOCATION (Continued)

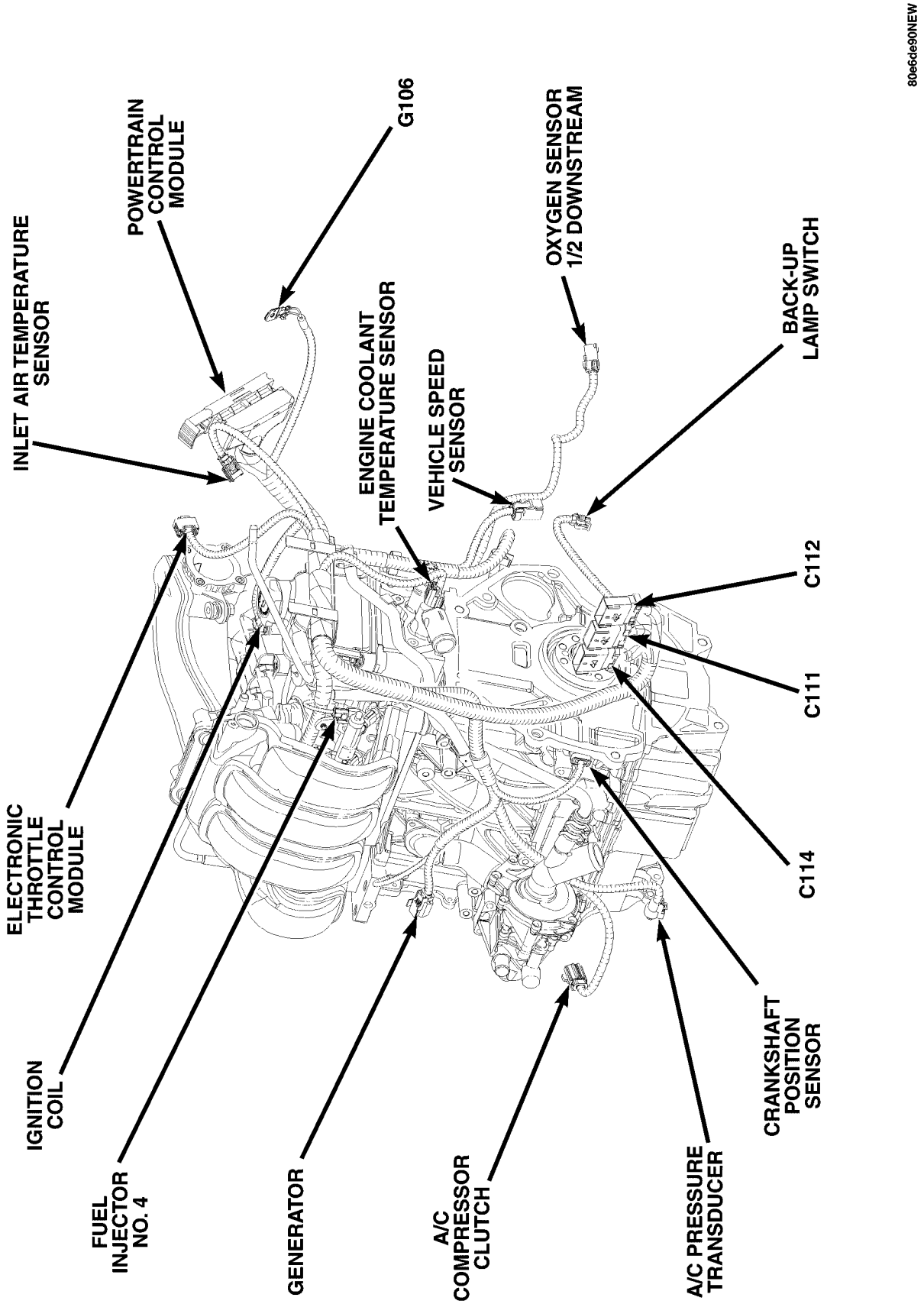

Fig. 26 ENGINE 1.6L (LEFT SIDE)

CONNECTOR/GROUND/SPLICE LOCATION (Continued)

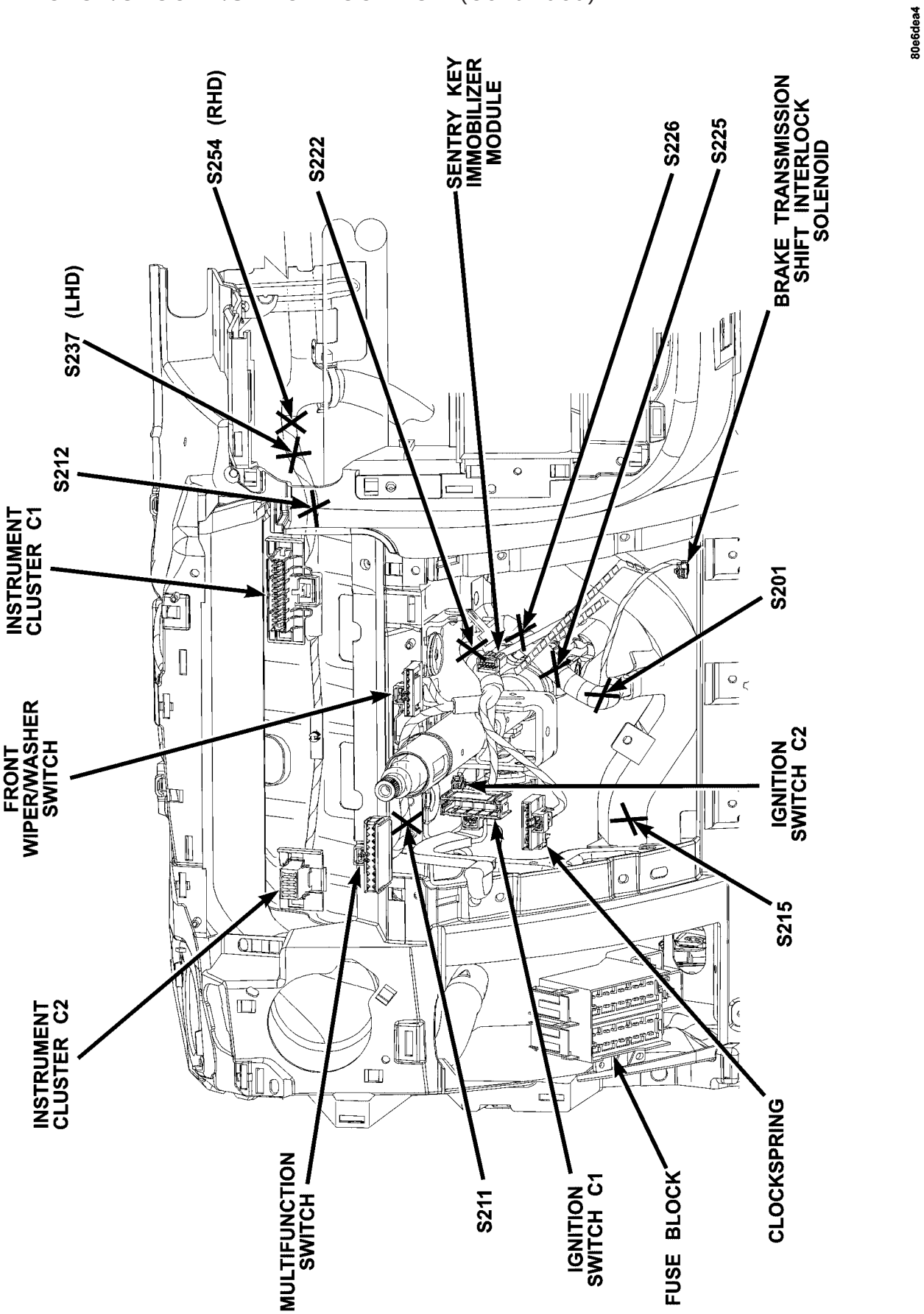

Fig. 27 LEFT SIDE INSTRUMENT PANEL (LHD) (RHD TYPICAL)

CONNECTOR/GROUND/SPLICE LOCATION (Continued)

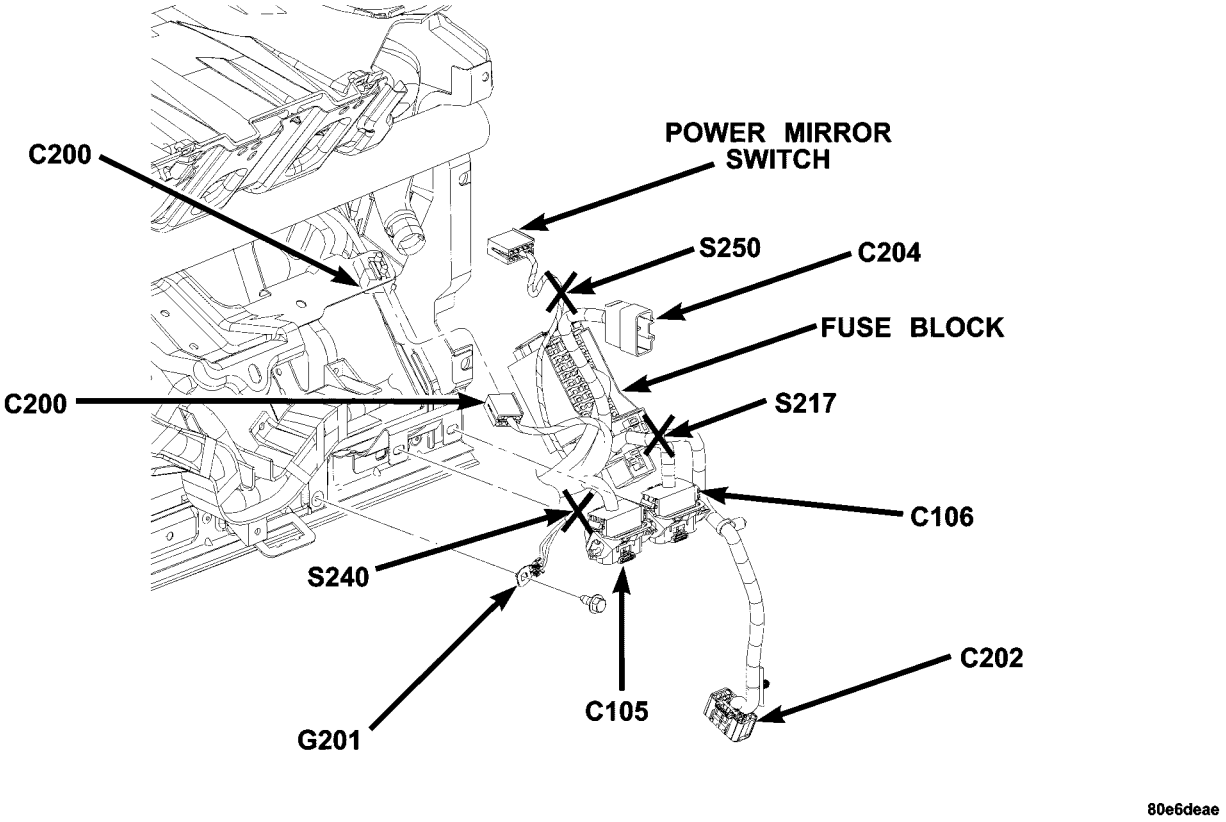

Fig. 28 LEFT REAR INSTRUMENT PANEL (LHD)

CONNECTOR/GROUND/SPLICE LOCATION (Continued)

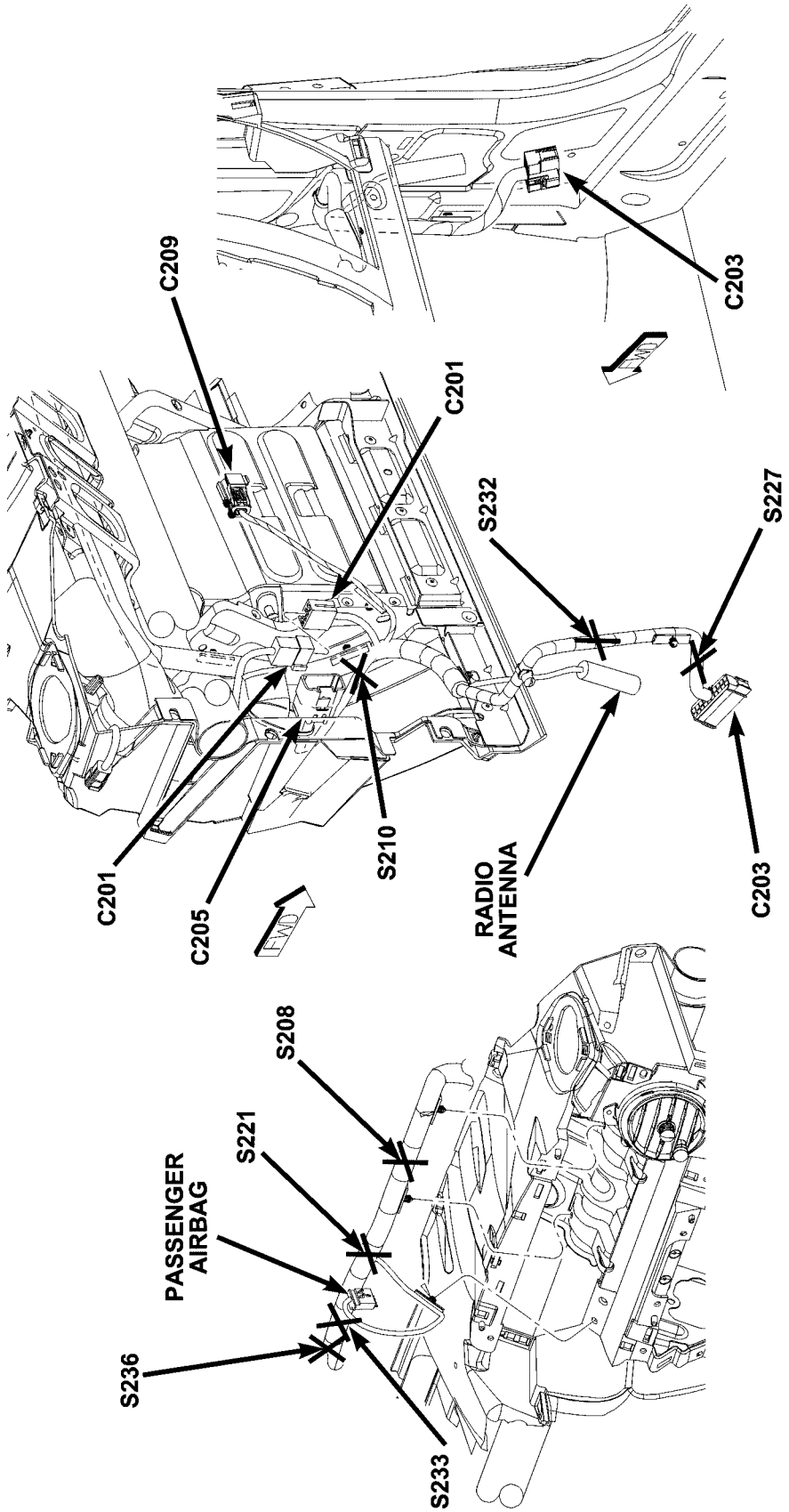

Fig. 29 RIGHT REAR INSTRUMENT PANEL (LHD)

CONNECTOR/GROUND/SPLICE LOCATION (Continued)

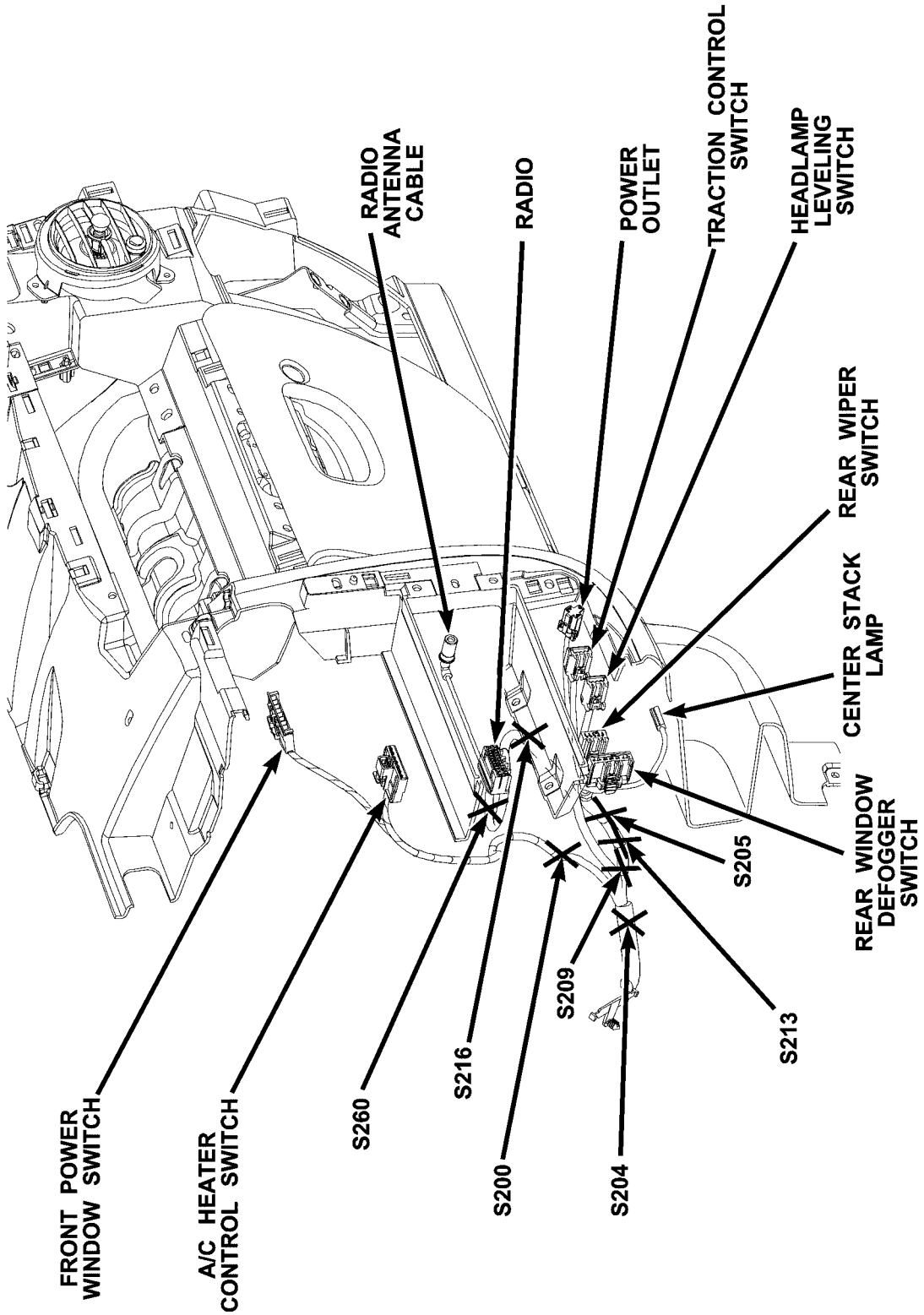

Fig. 30 CENTER INSTRUMENT PANEL

CONNECTOR/GROUND/SPLICE LOCATION (Continued)

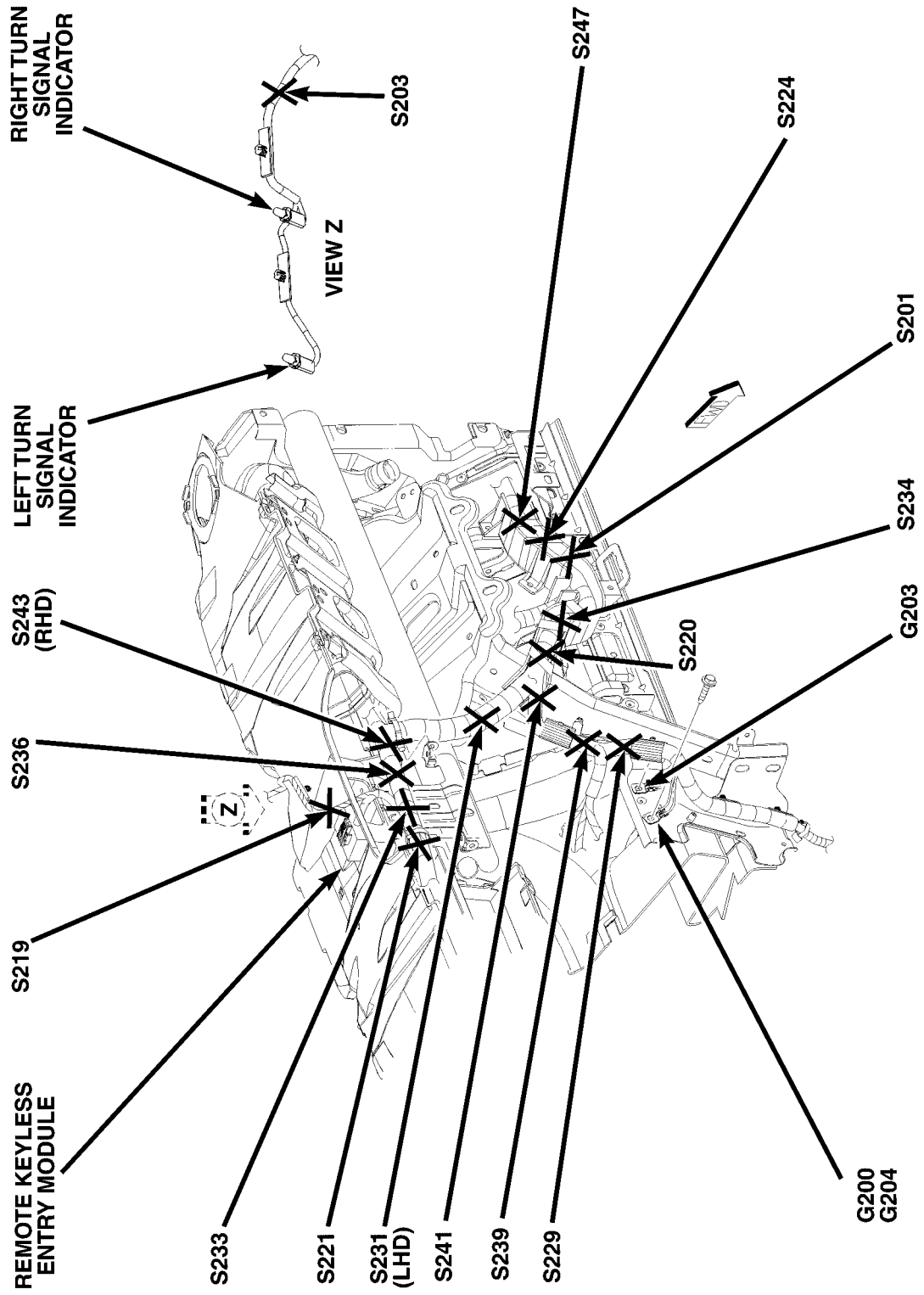

Fig. 31 REAR CENTER INSTRUMENT PANEL LHD (RHD TYPICAL)

CONNECTOR/GROUND/SPLICE LOCATION (Continued)

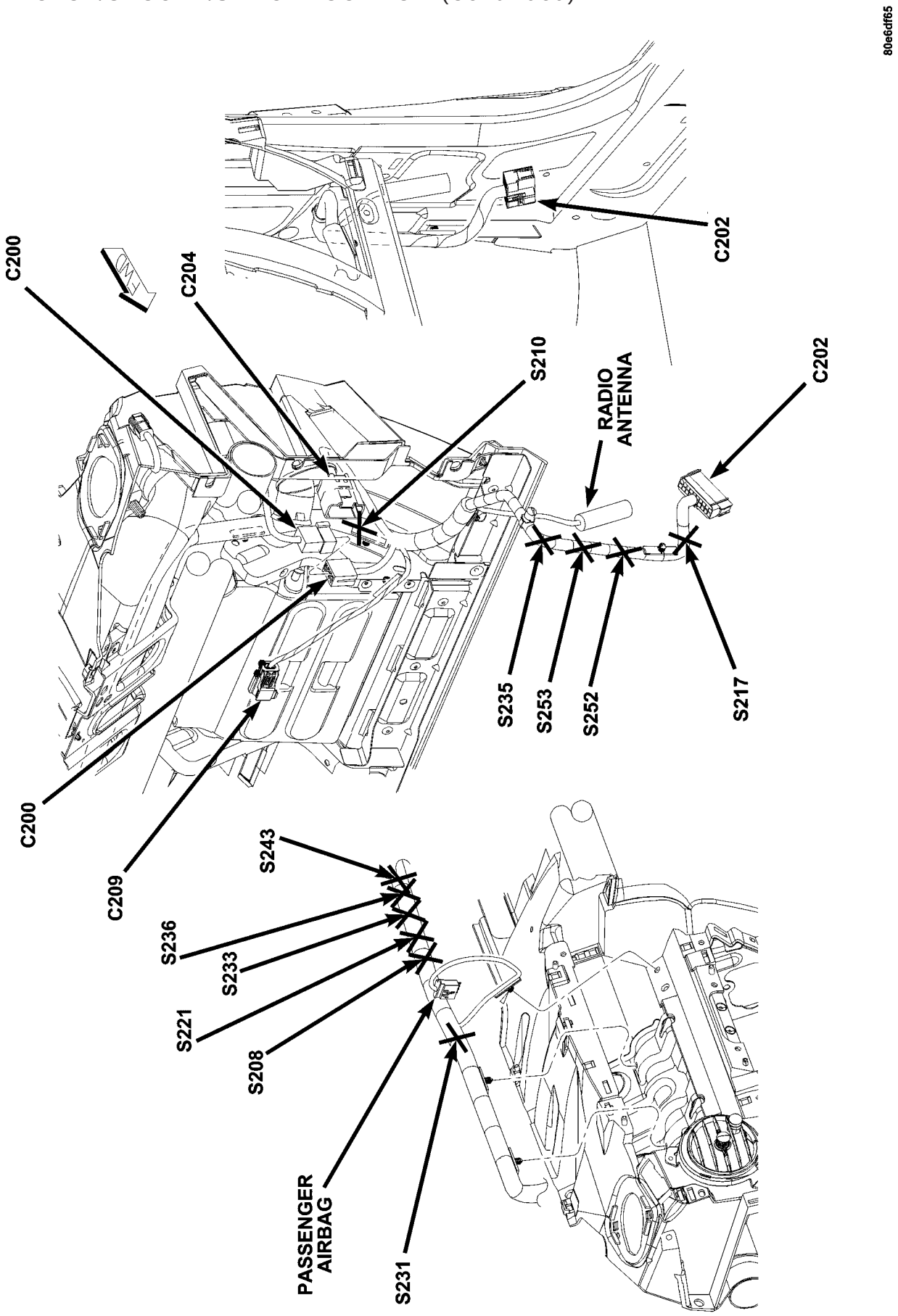

Fig. 32 LEFT REAR INSTRUMENT PANEL (RHD)

CONNECTOR/GROUND/SPLICE LOCATION (Continued)

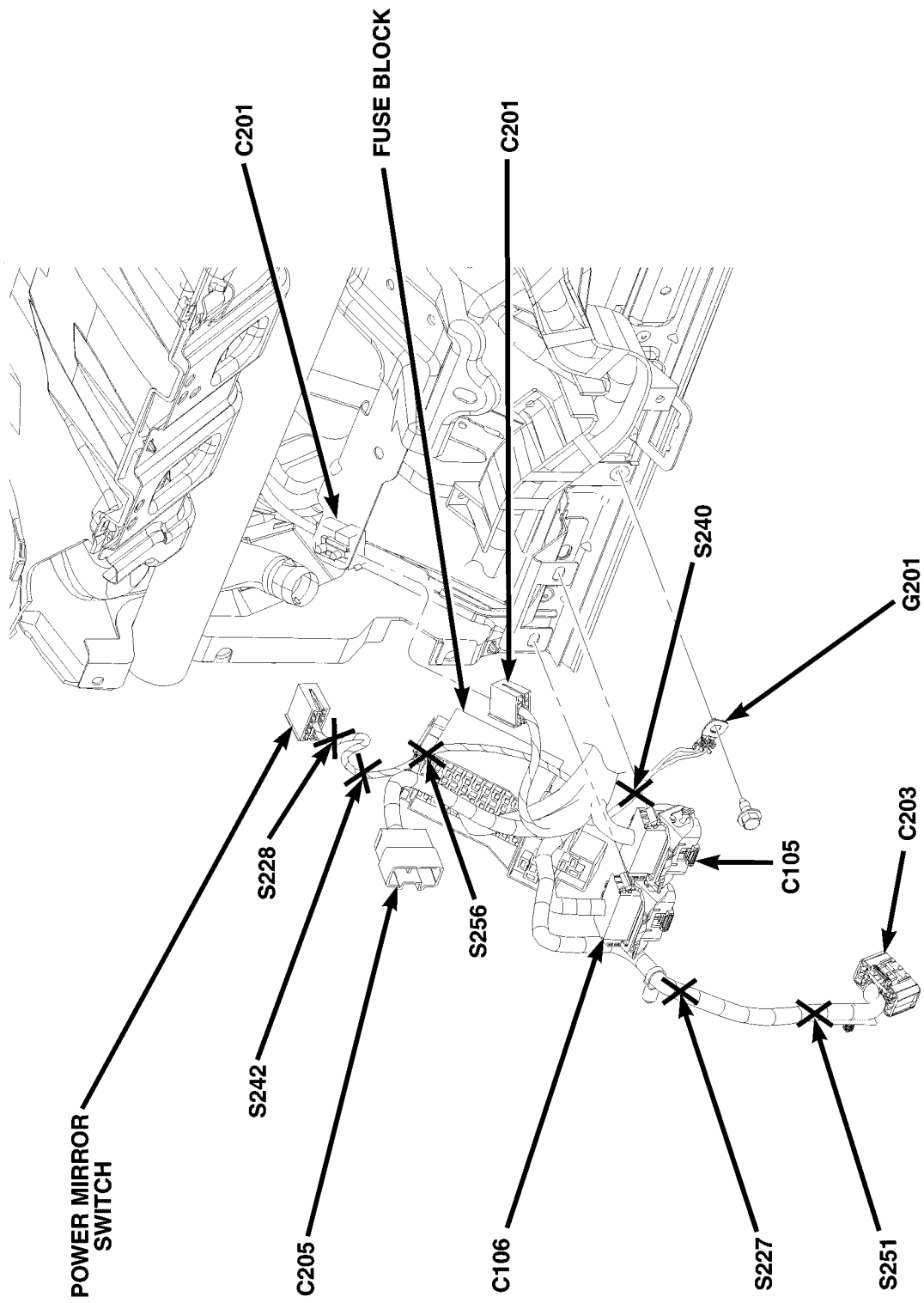

Fig. 33 RIGHT REAR INSTRUMENT PANEL (RHD)

CONNECTOR/GROUND/SPLICE LOCATION (Continued)

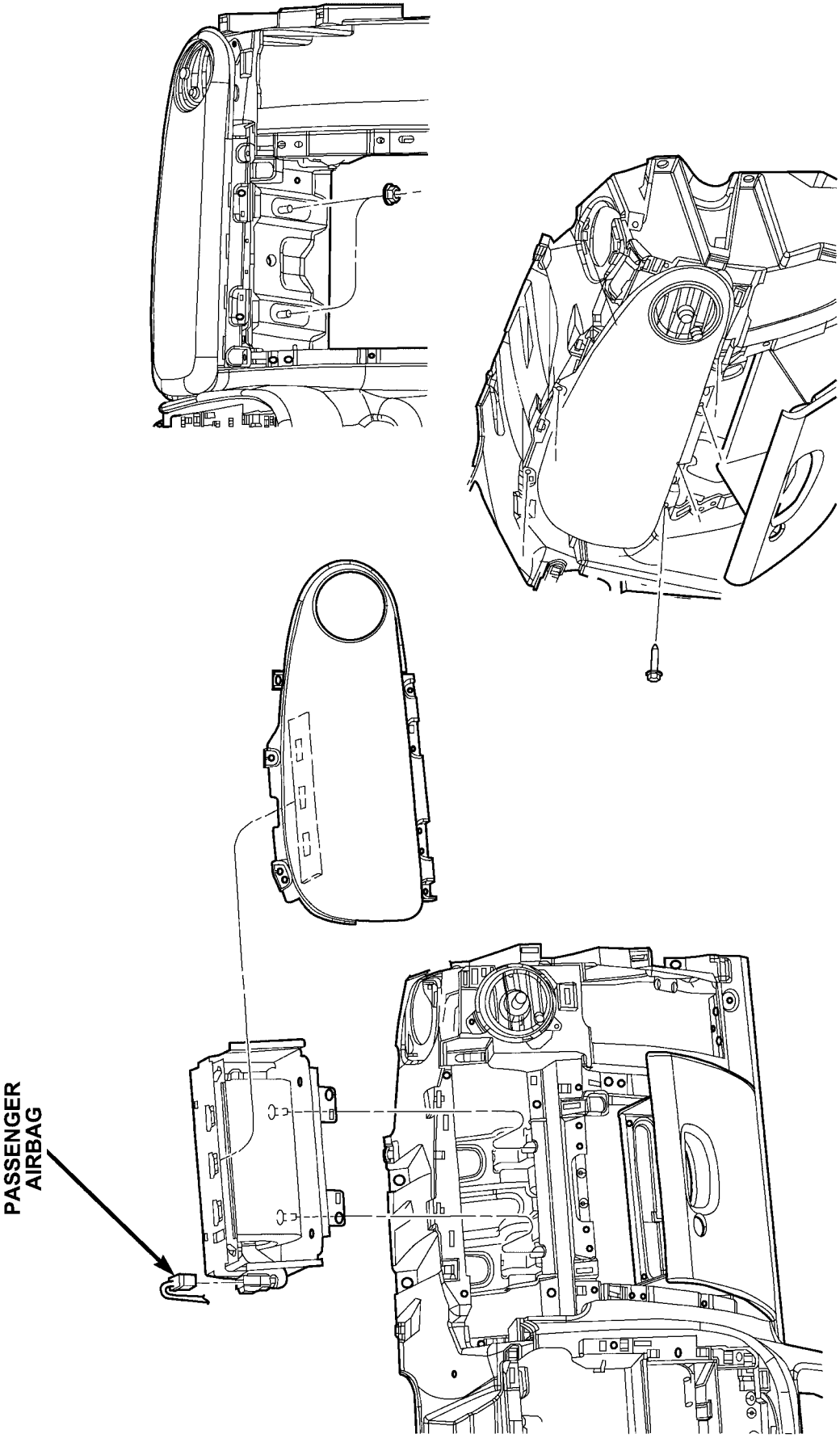

Fig. 34 PASSENGER SIDE AIRBAG

CONNECTOR/GROUND/SPLICE LOCATION (Continued)

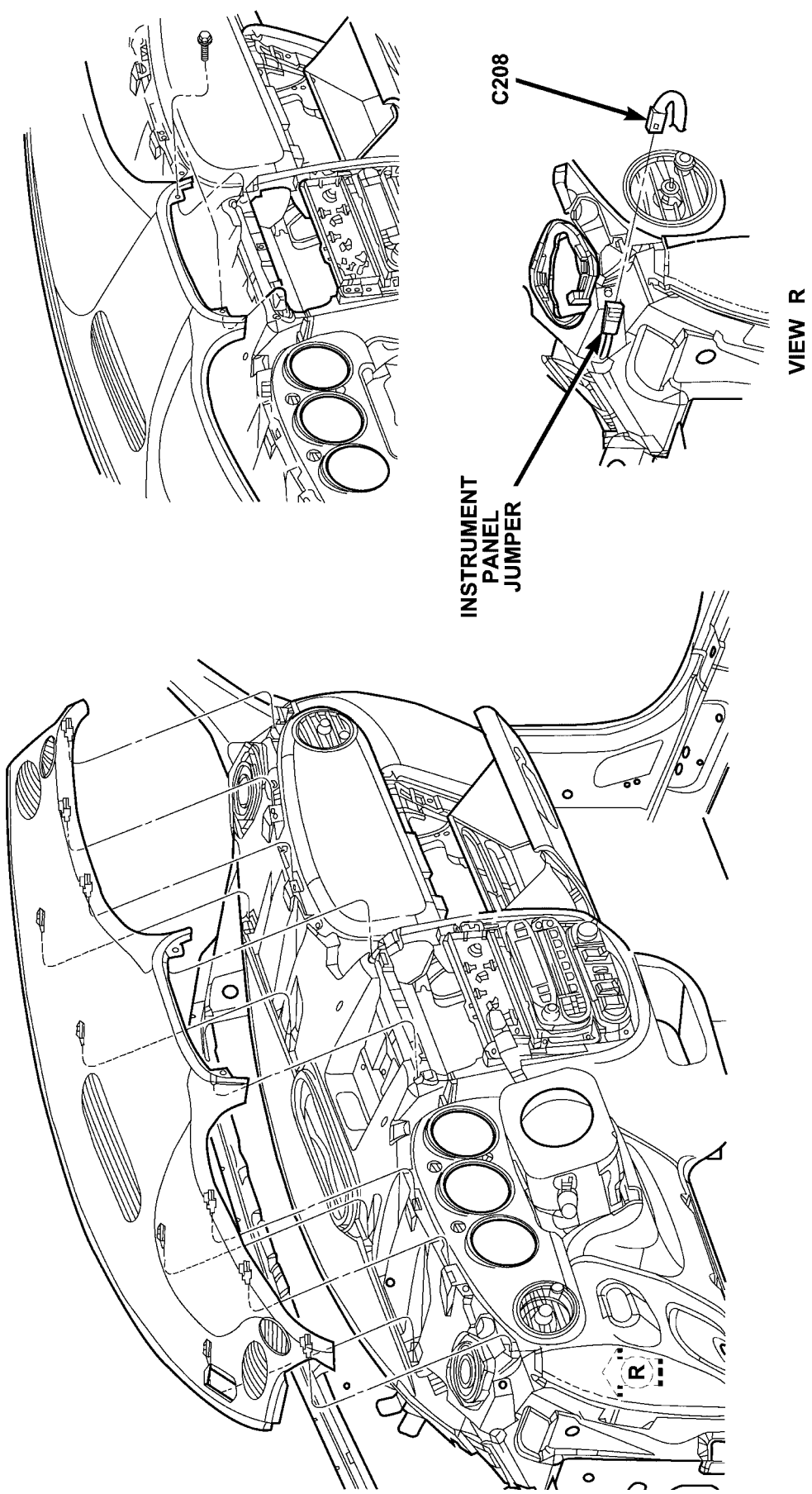

Fig. 35 INSTRUMENT PANEL JUMPER

CONNECTOR/GROUND/SPLICE LOCATION (Continued)

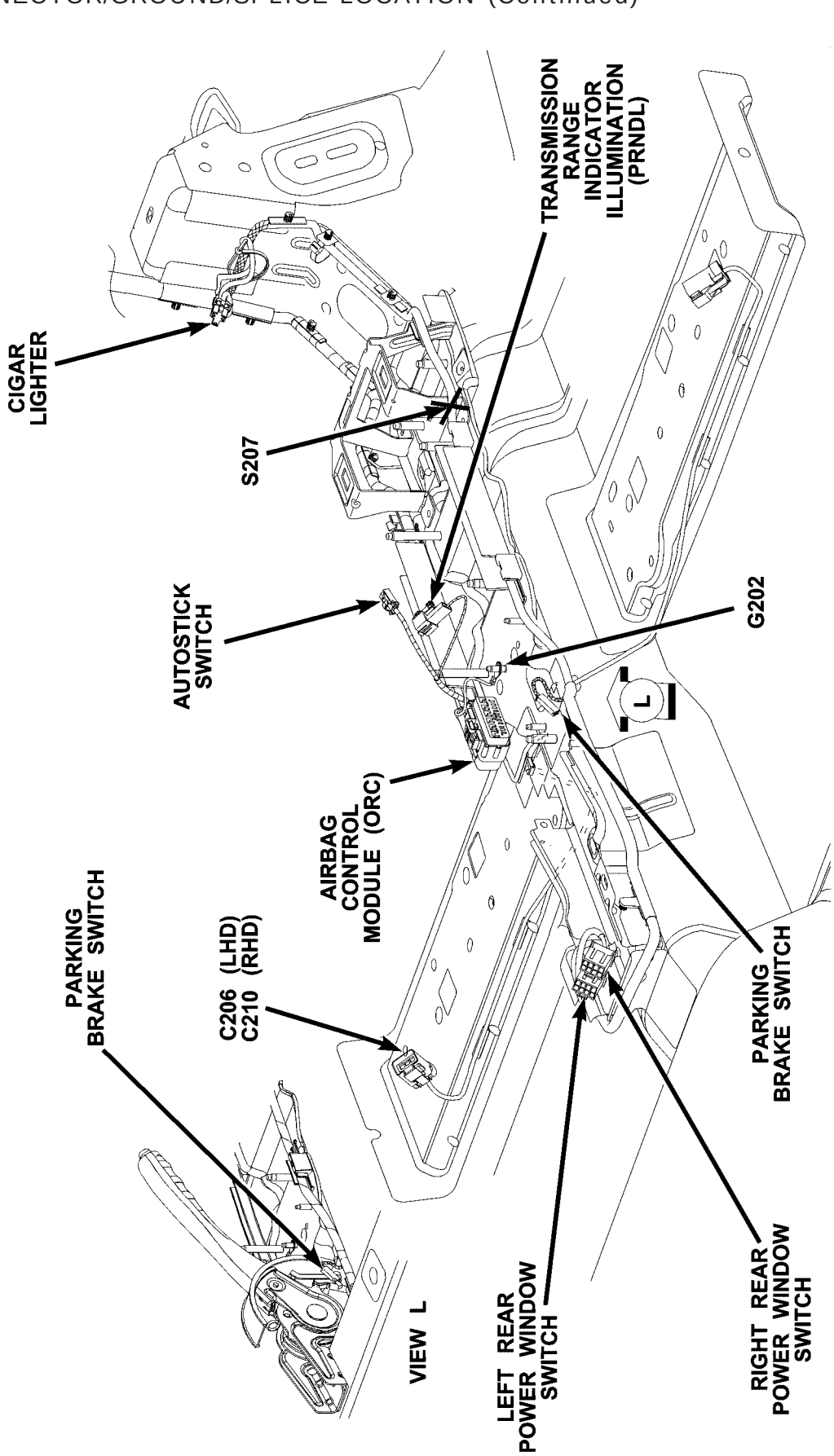

Fig. 36 CENTER CONSOLE

CONNECTOR/GROUND/SPLICE LOCATION (Continued)

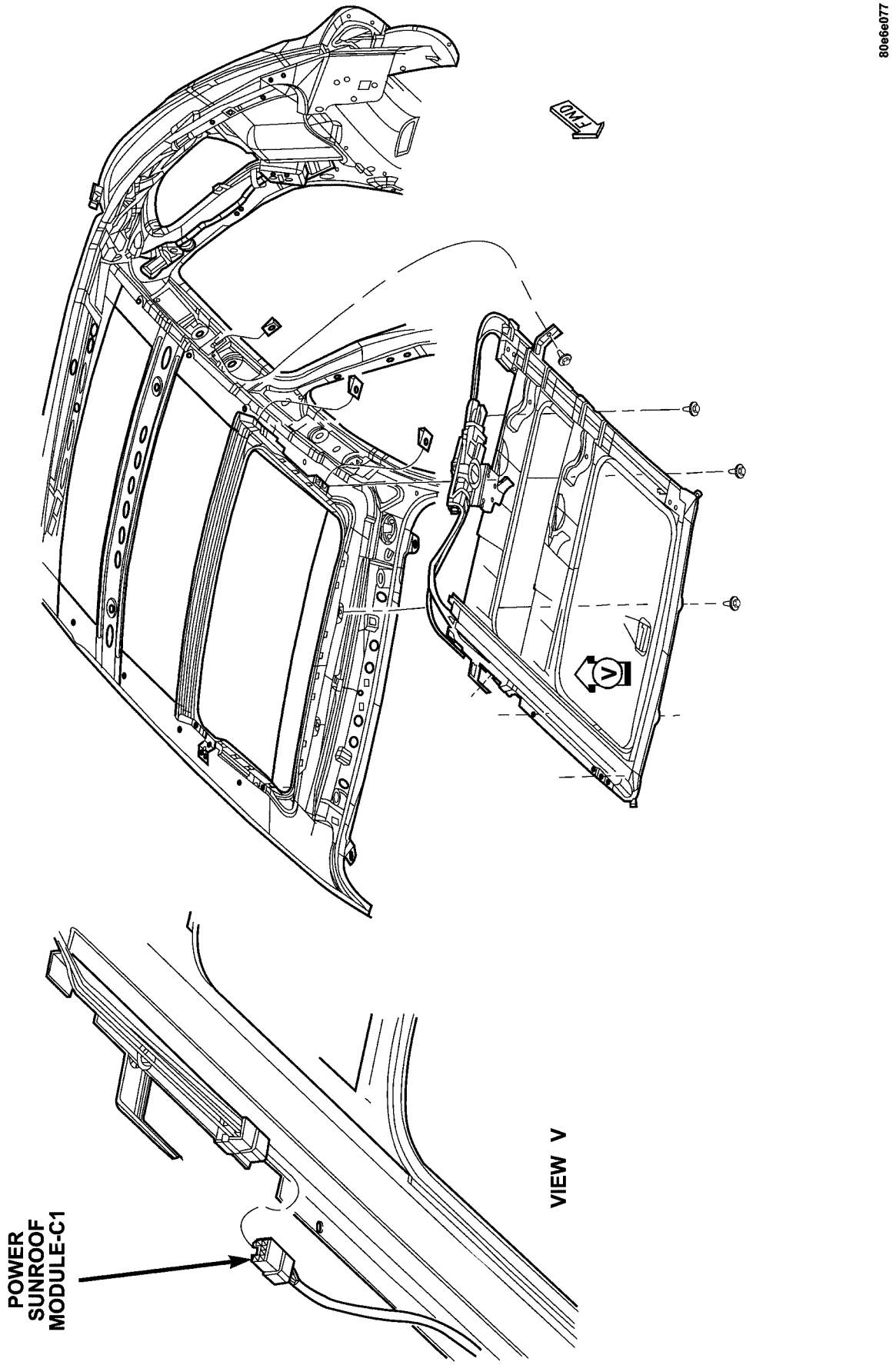

Fig. 37 SUNROOF

CONNECTOR/GROUND/SPLICE LOCATION (Continued)

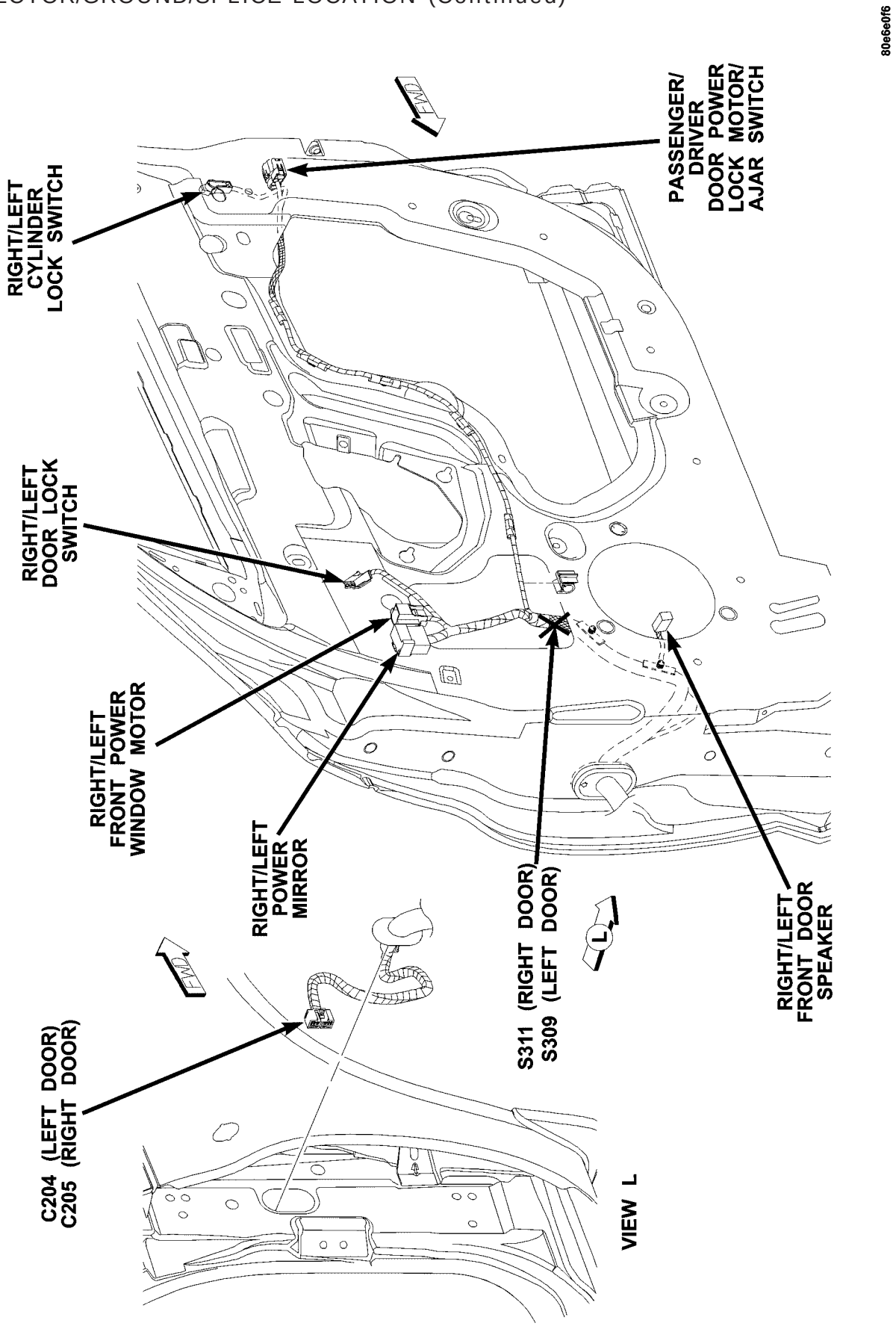

Fig. 38 FRONT DOOR (EXCEPT EXPORT)

CONNECTOR/GROUND/SPLICE LOCATION (Continued)

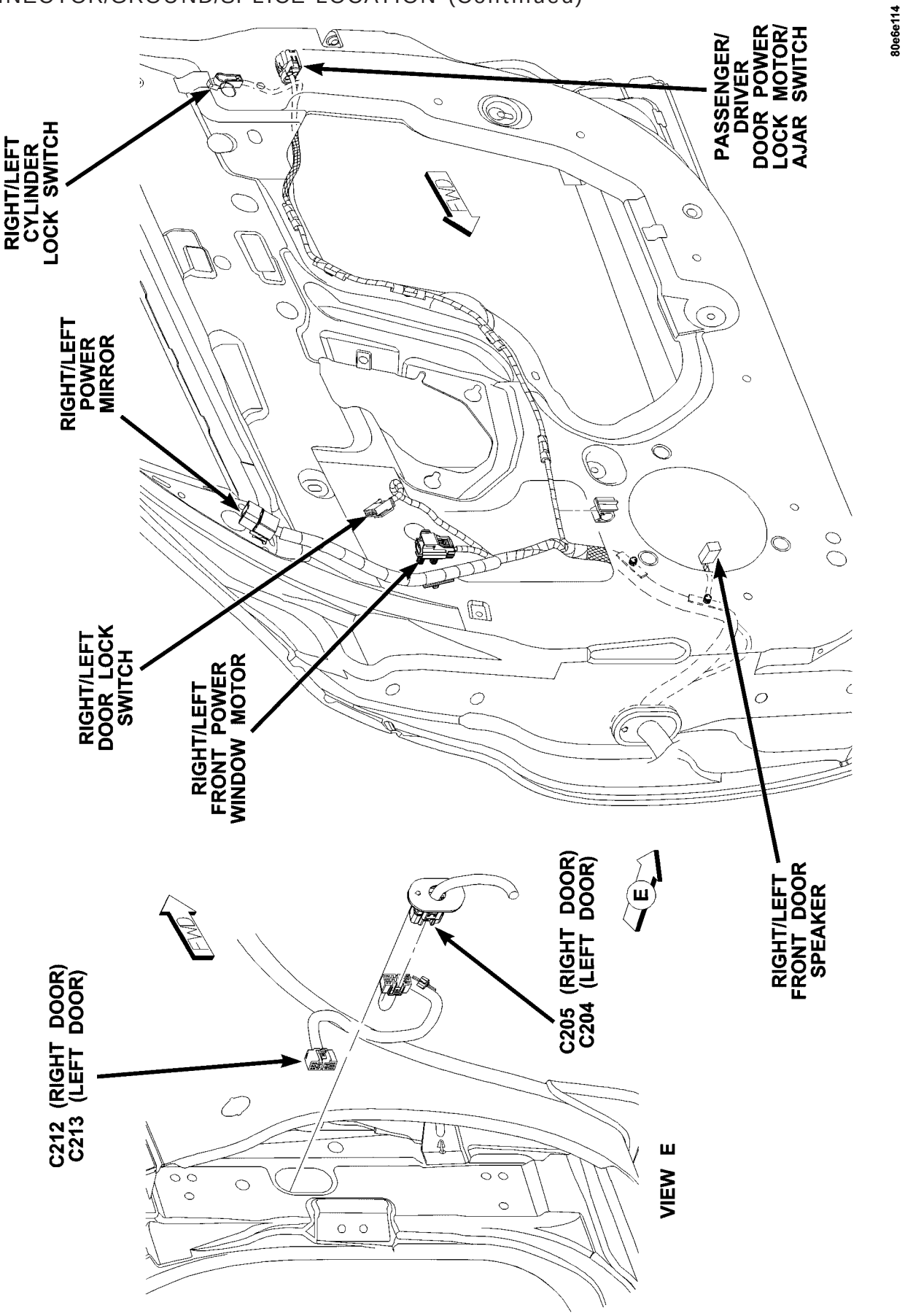

Fig. 39 FRONT DOOR (EXPORT)

CONNECTOR/GROUND/SPLICE LOCATION (Continued)

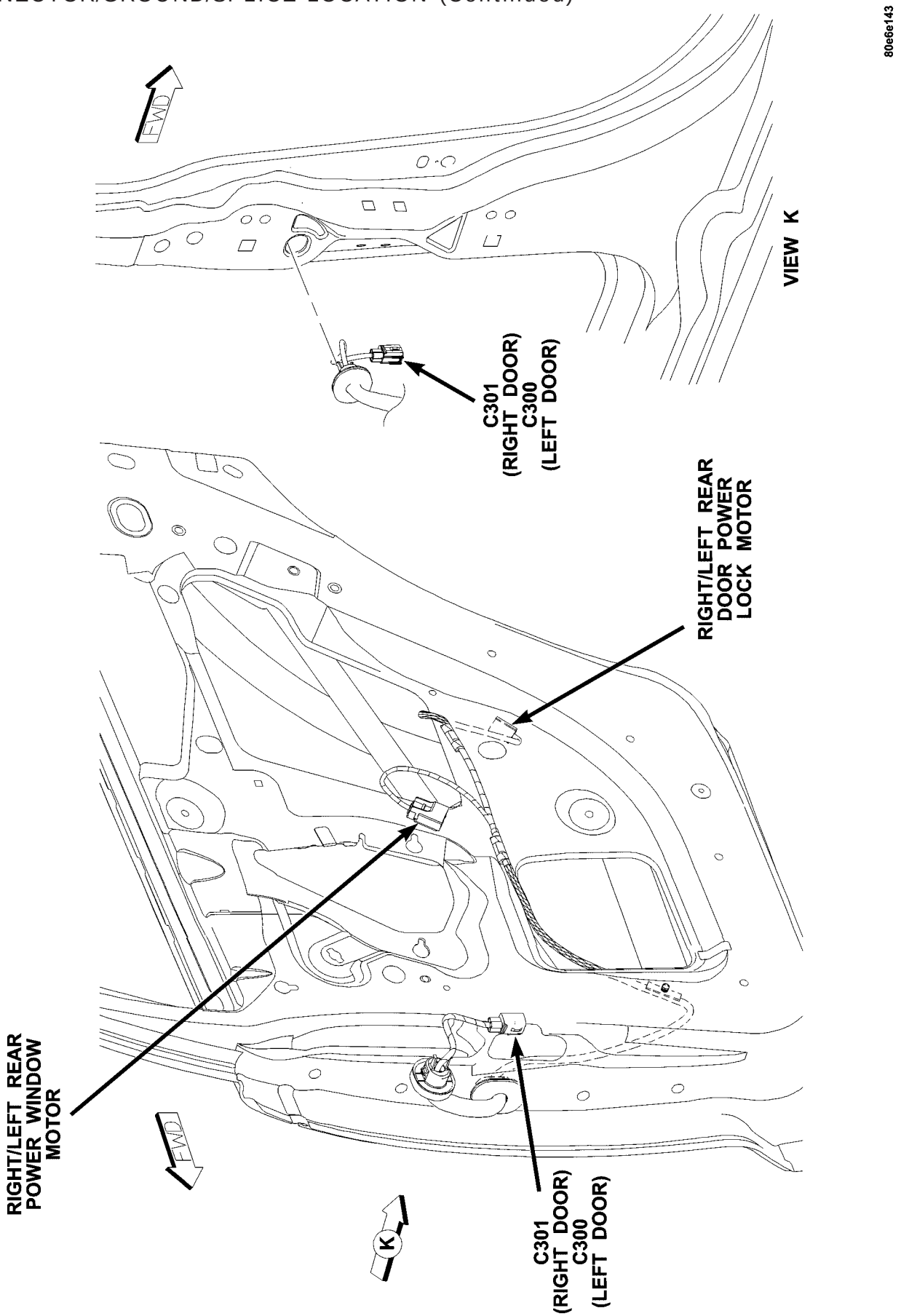

Fig. 40 REAR DOOR

CONNECTOR/GROUND/SPLICE LOCATION (Continued)

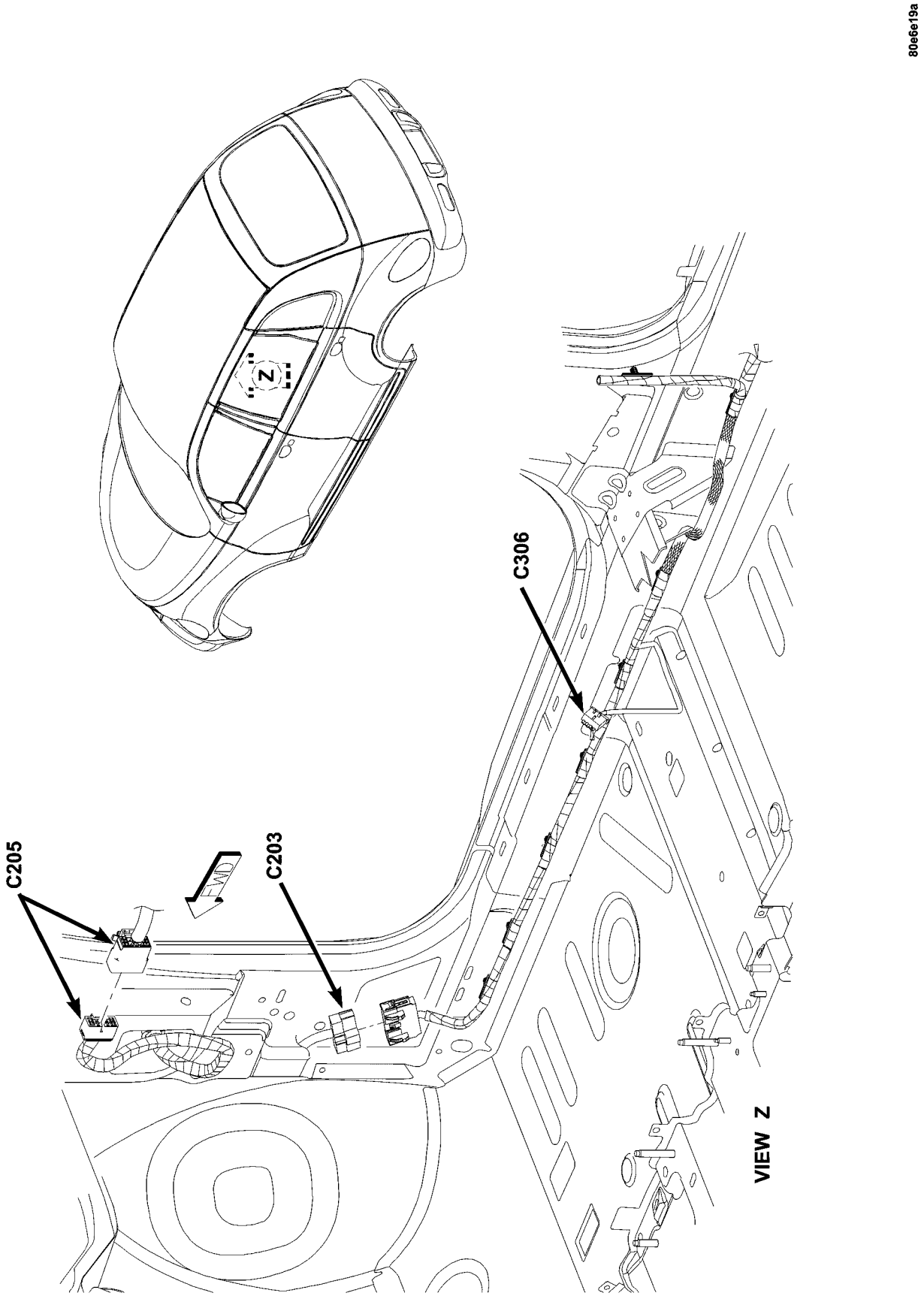

Fig. 41 RIGHT FRONT BODY

CONNECTOR/GROUND/SPLICE LOCATION (Continued)

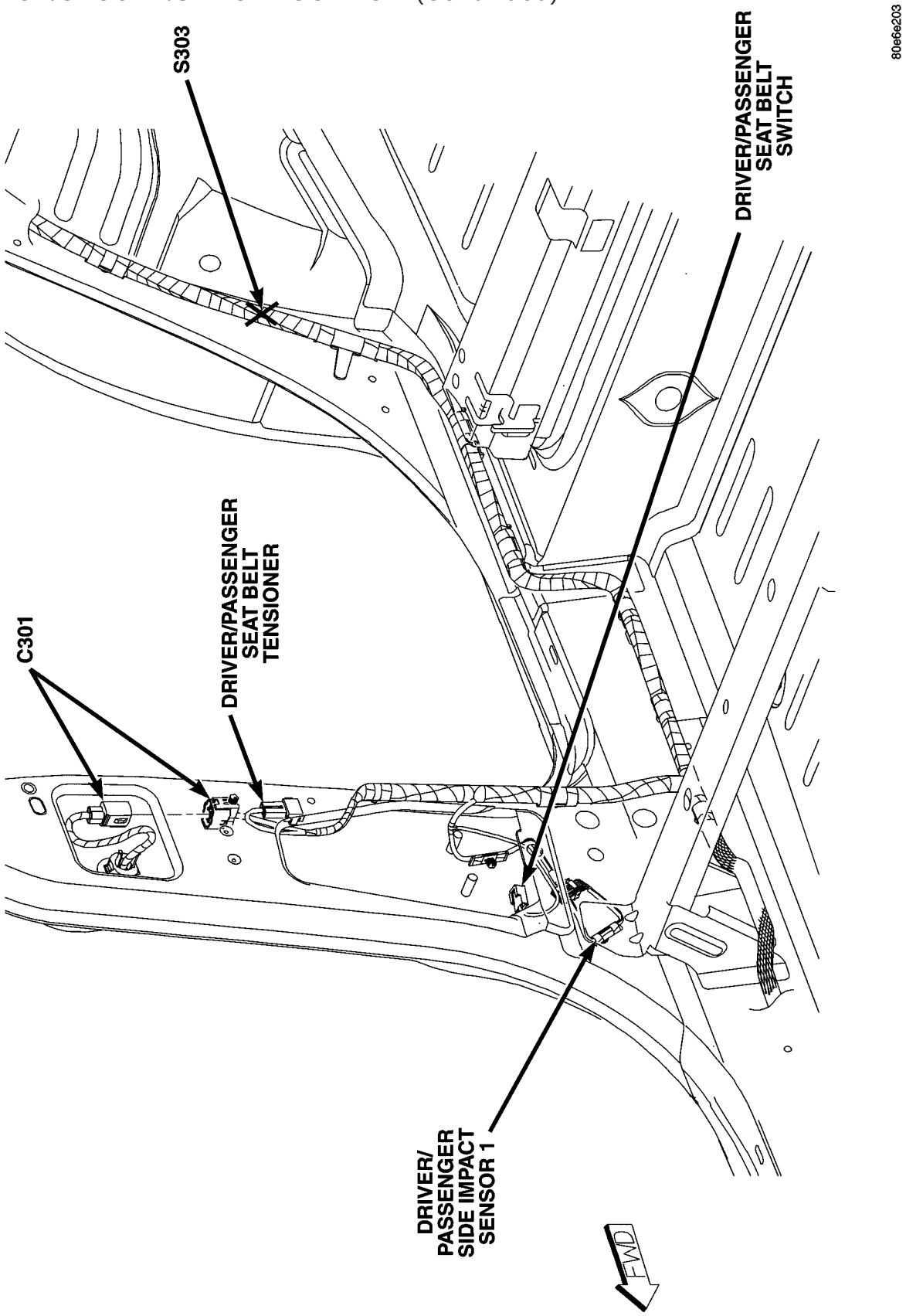

Fig. 42 RIGHT REAR BODY

CONNECTOR/GROUND/SPLICE LOCATION (Continued)

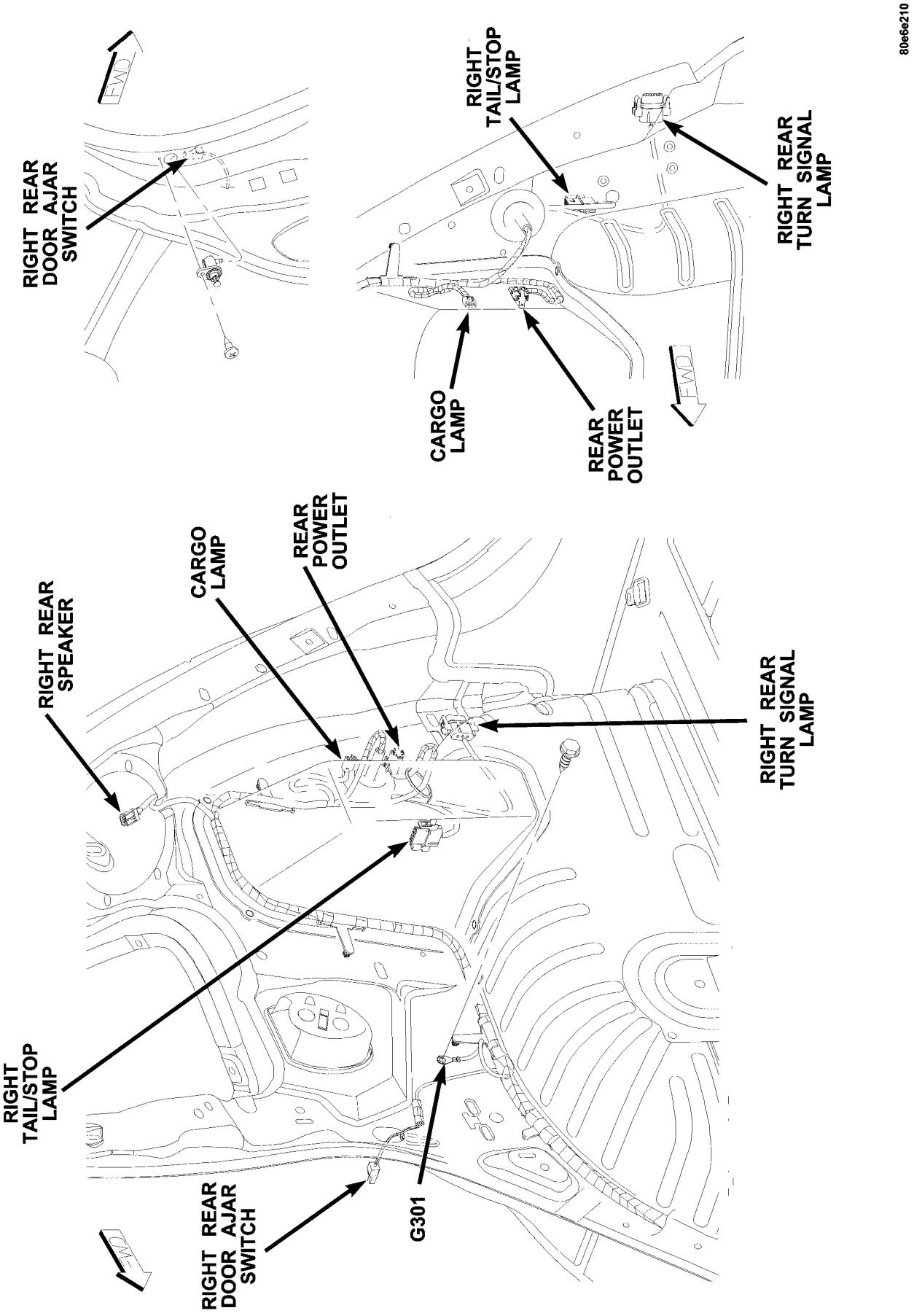

Fig. 43 RIGHT REAR QUARTER

CONNECTOR/GROUND/SPLICE LOCATION (Continued)

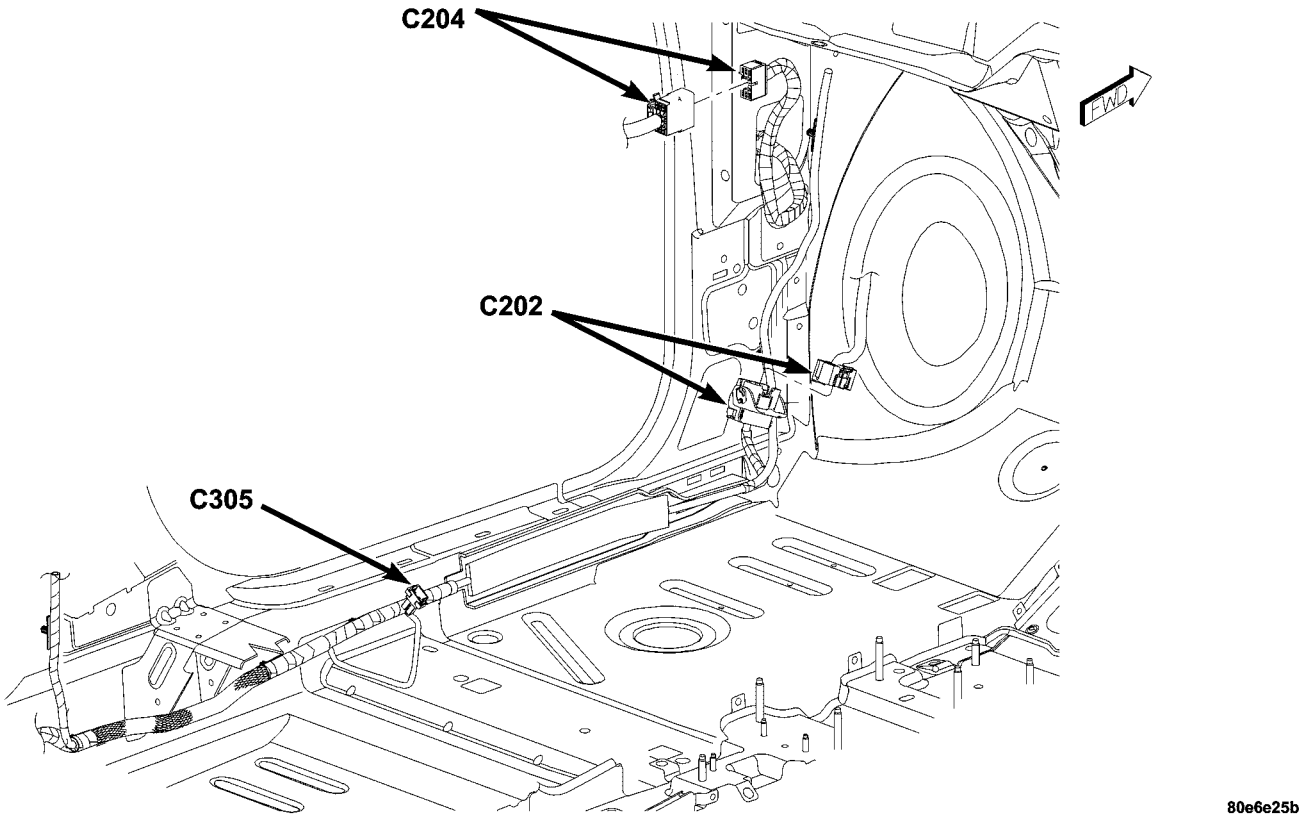

Fig. 44 LEFT FRONT BODY

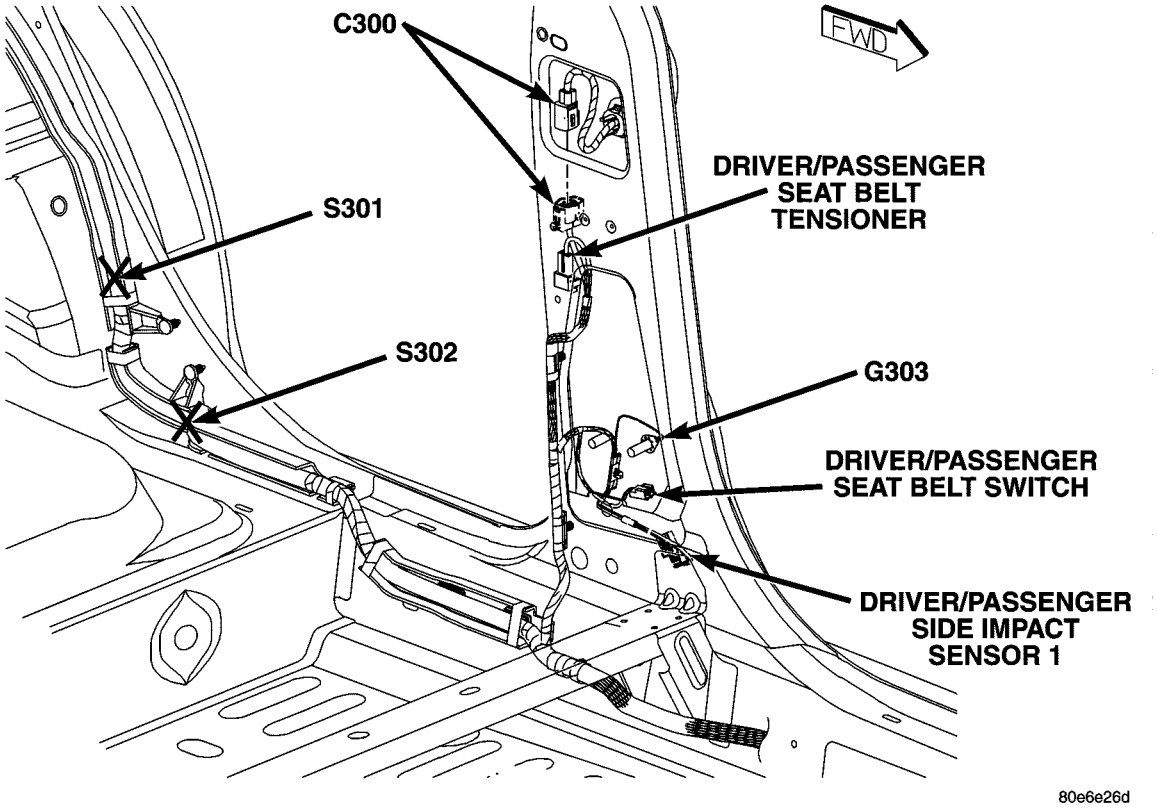

Fig. 45 LEFT SIDE BODY

CONNECTOR/GROUND/SPLICE LOCATION (Continued)

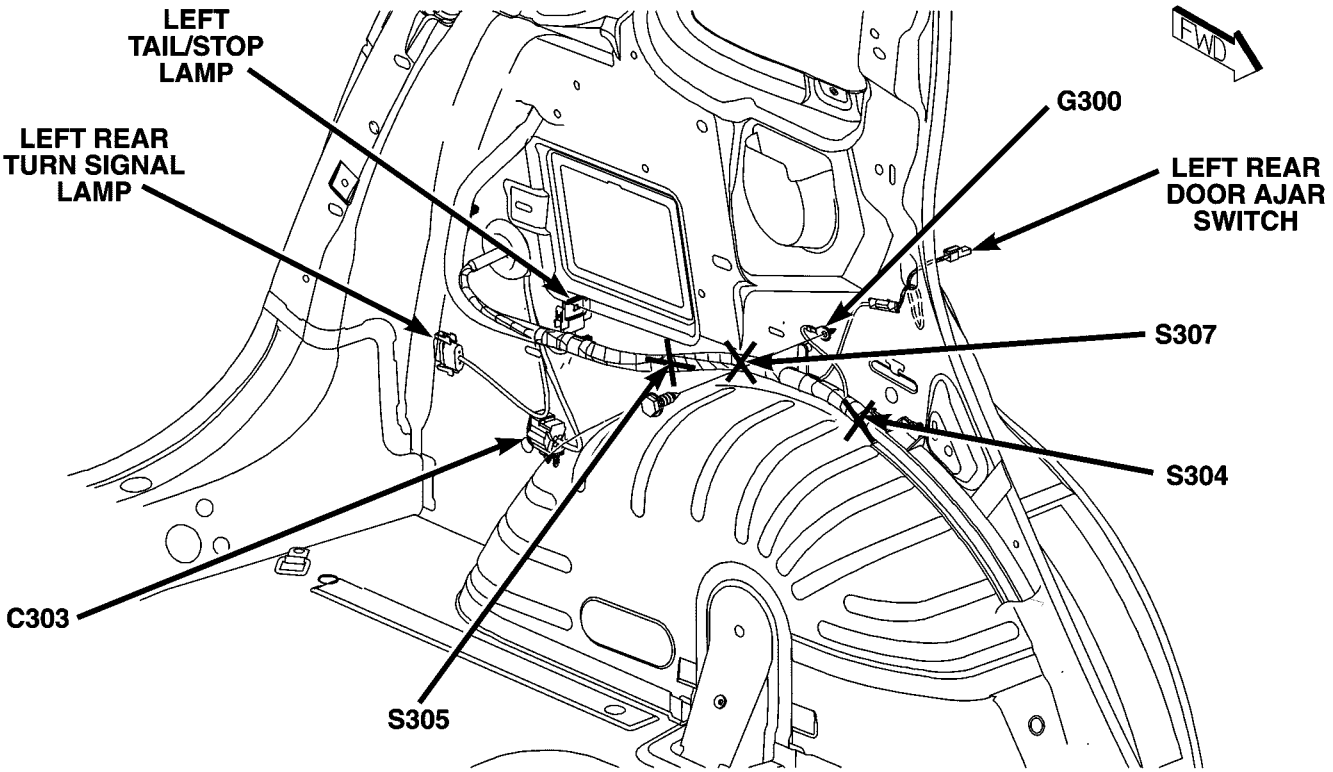

Fig. 46 LEFT REAR QUARTER

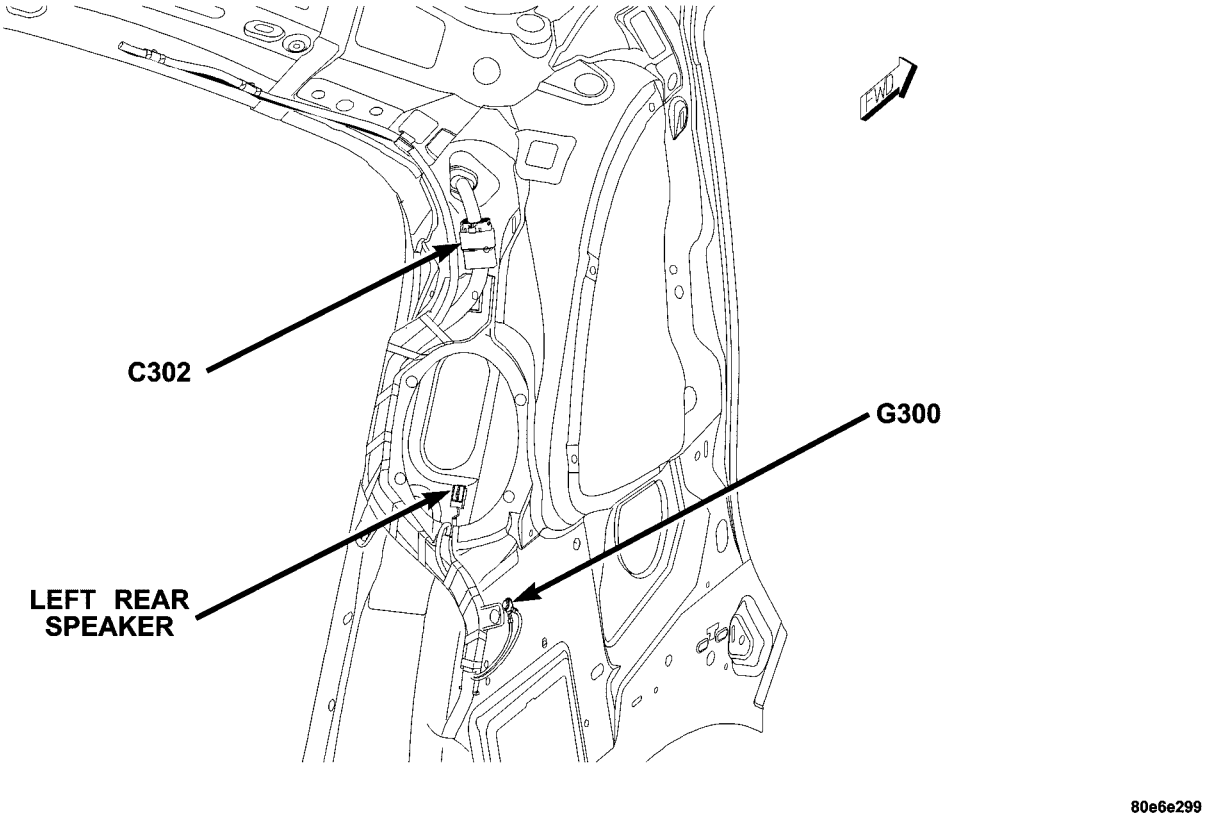

Fig. 47 LEFT REAR SPEAKER

CONNECTOR/GROUND/SPLICE LOCATION (Continued)

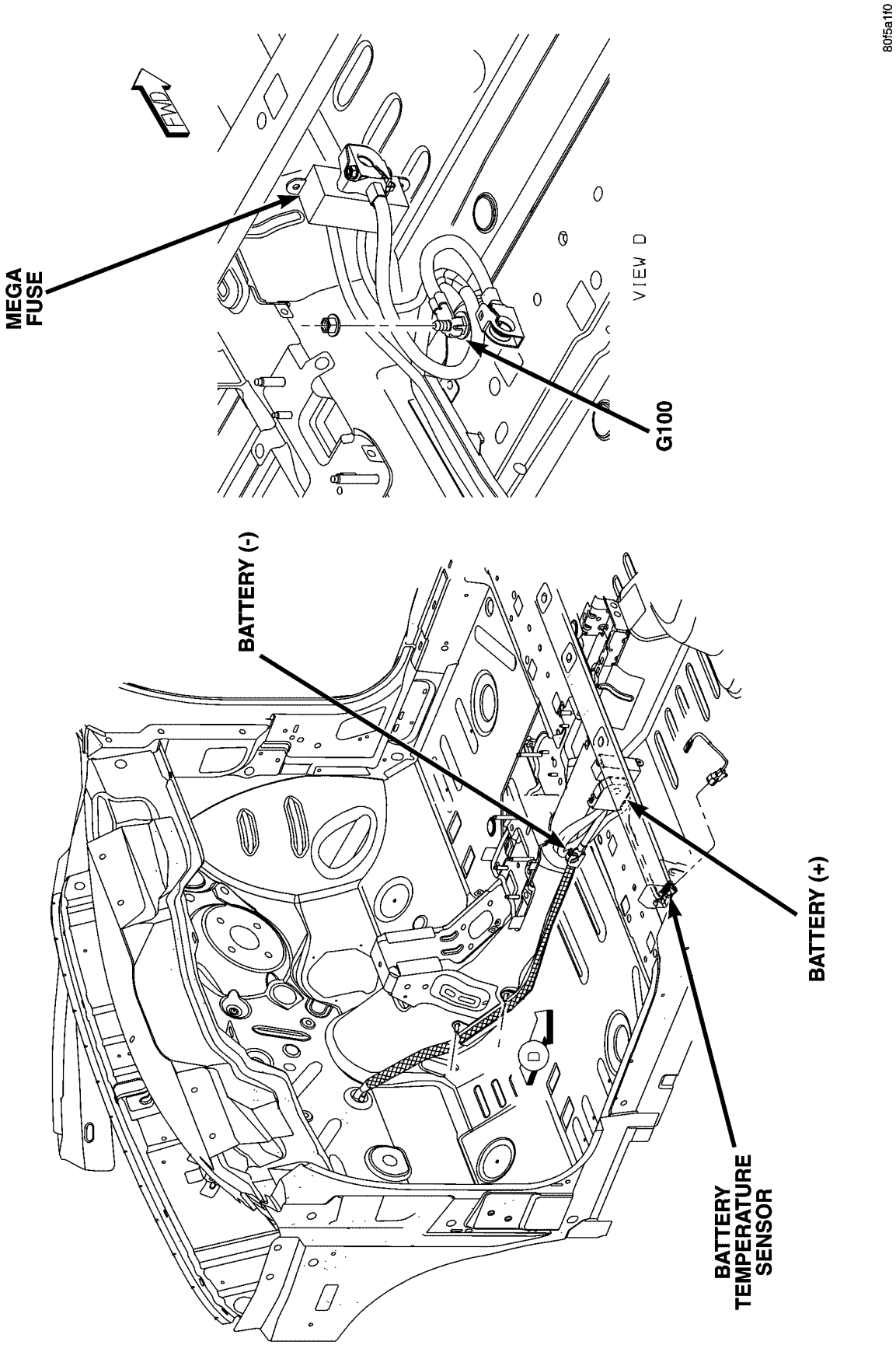

Fig. 48 BATTERY (DIESEL)

CONNECTOR/GROUND/SPLICE LOCATION (Continued)

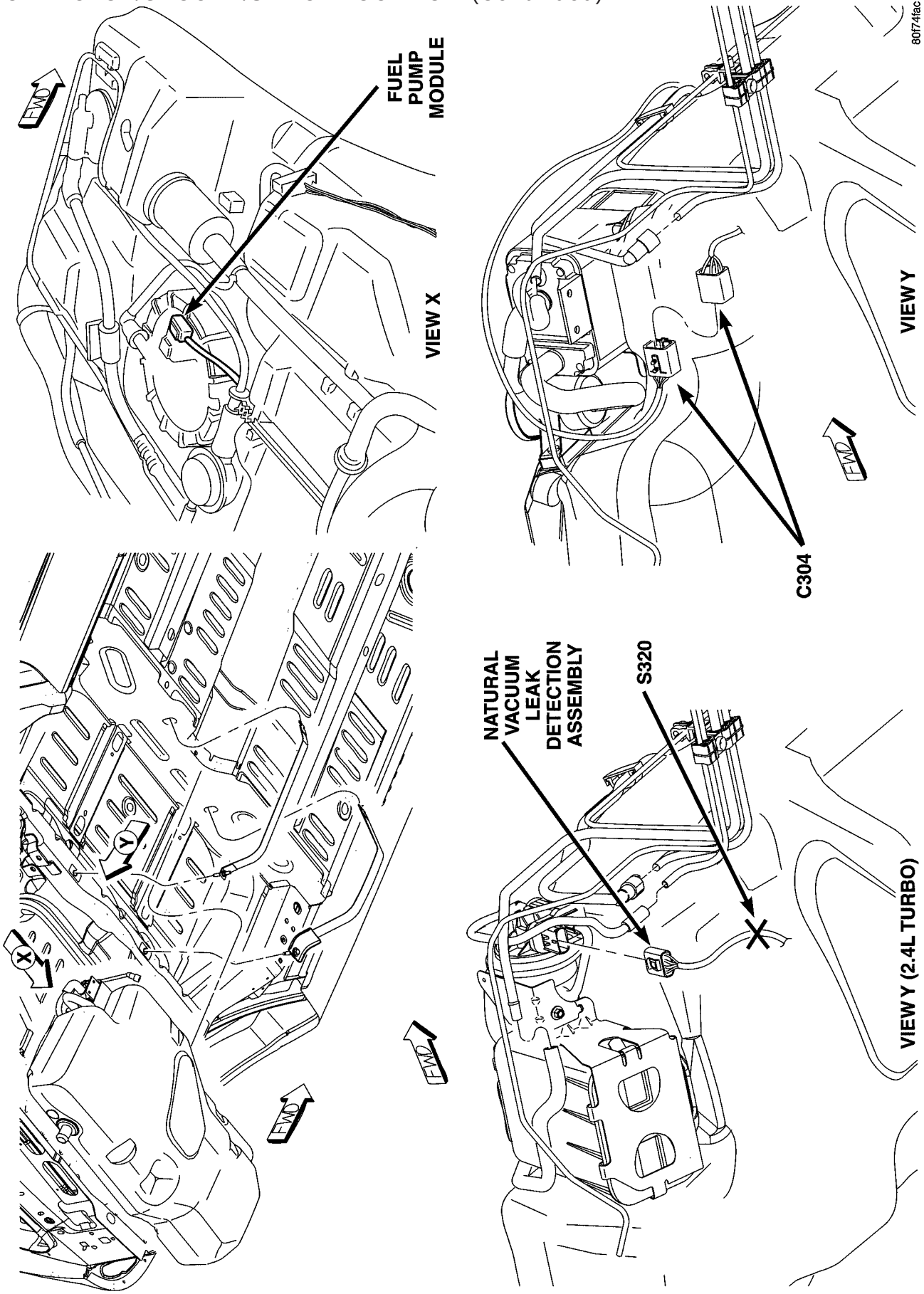

Fig. 49 FUEL TANK

CONNECTOR/GROUND/SPLICE LOCATION (Continued)

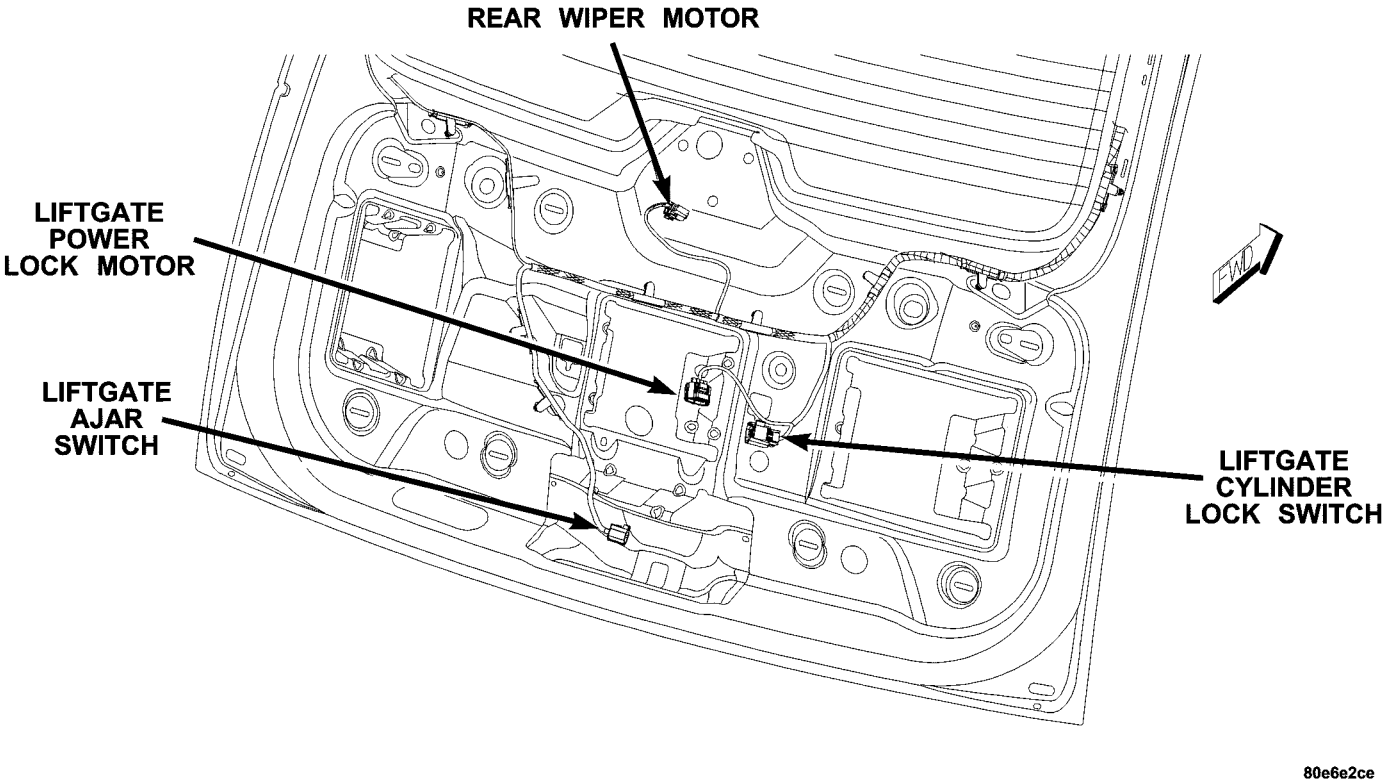

Fig. 50 LOWER LIFTGATE

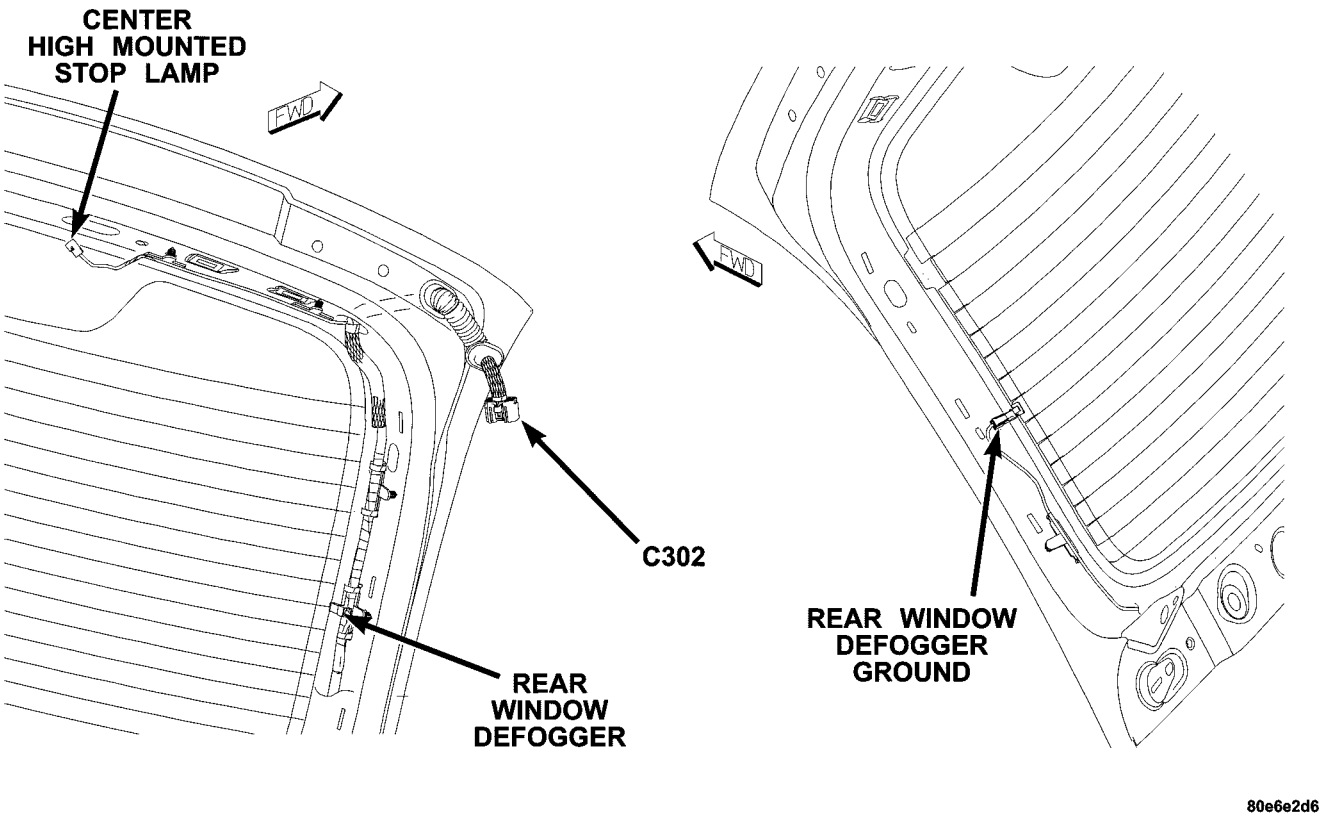

Fig. 51 HEATED REAR WINDOW

CONNECTOR/GROUND/SPLICE LOCATION (Continued)

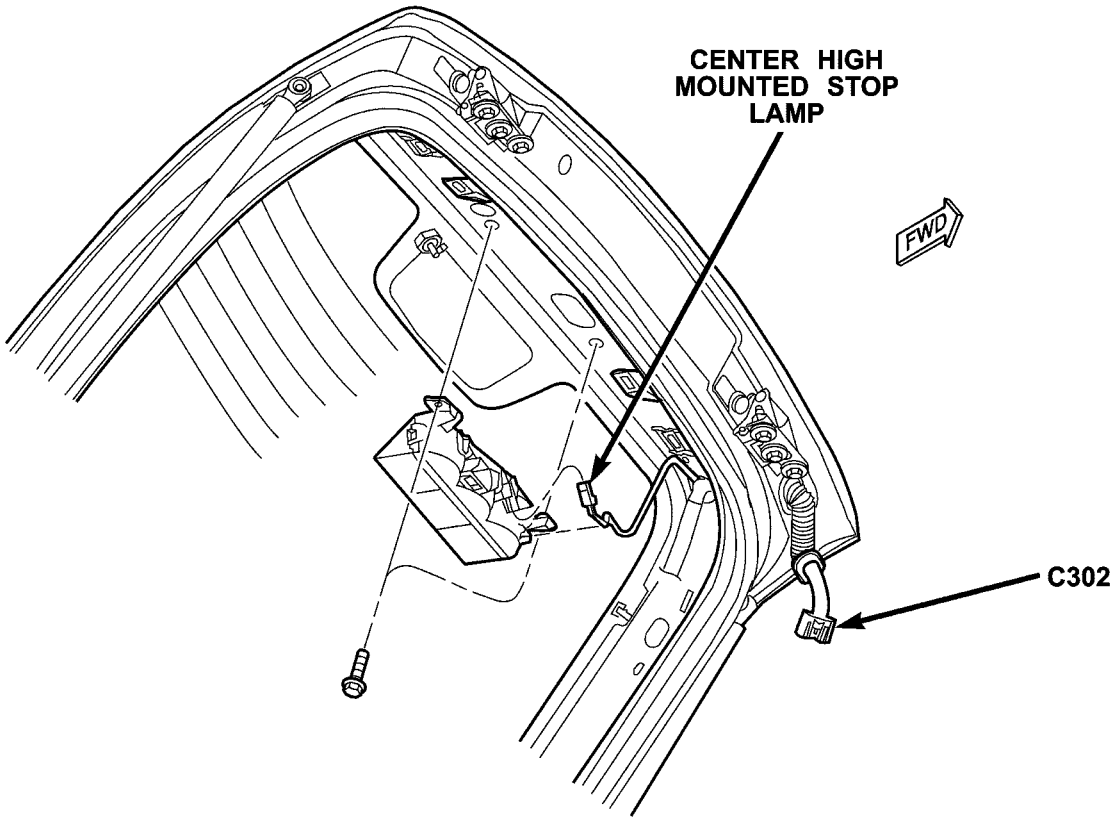

Fig. 52 CENTER HIGH MOUNTED STOP LAMP

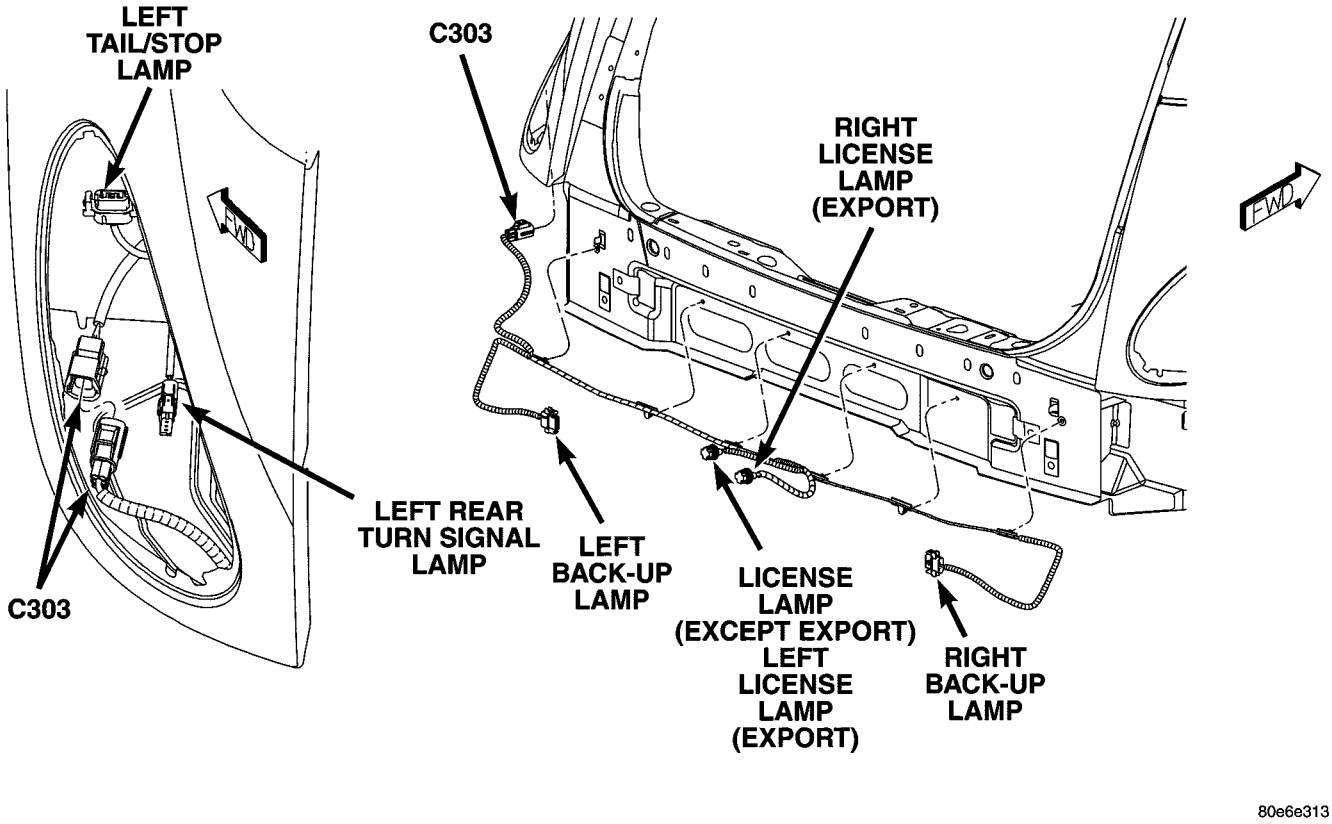

Fig. 53 BACK-UP LAMPS

8W-97 POWER DISTRIBUTION

TABLE OF CONTENTS

	page
POWER DISTRIBUTION	
DESCRIPTION	1
OPERATION	1
CIGAR LIGHTER/POWER OUTLET	
DESCRIPTION	1
OPERATION	2
REMOVAL	3
INSTALLATION	3
FUSE BLOCK	
DESCRIPTION	4
OPERATION	4
REMOVAL	4
INSTALLATION	4
IOD FUSE	
DESCRIPTION	4
OPERATION	4
REMOVAL	5
INSTALLATION	5
POWER DISTRIBUTION CENTER	
DESCRIPTION	5
OPERATION	5
REMOVAL	6
INSTALLATION	6
RELAY	
REMOVAL	6
INSTALLATION	6

POWER DISTRIBUTION

DESCRIPTION

This group covers the various standard and optional power distribution components used on this model. Refer to Wiring Diagrams for complete circuit diagrams of the various power distribution components.

The power distribution system for this vehicle consists of the following components:

- Power Distribution Center (PDC)
- Fuse Block

OPERATION

The power distribution system for this vehicle is designed to provide safe, reliable, centralized, and convenient to access, distribution of the electrical current required to operate all of the many standard and optional factory-installed electrical and electronic powertrain, chassis, safety, comfort and convenience systems. At the same time, these systems were designed to provide centralized locations for conducting diagnosis of faulty circuits, and for sourcing the additional current requirements of many aftermarket vehicle accessory and convenience items.

These power distribution systems also incorporate various types of circuit control and protection features, including:

- Fuses
- Fuse cartridges
- Fusible links
- Automatic resetting circuit breakers
- Relays
- Flashers
- Timers
- Circuit splice blocks.

CIGAR LIGHTER/POWER OUTLET

DESCRIPTION

INSTRUMENT PANEL MOUNTED

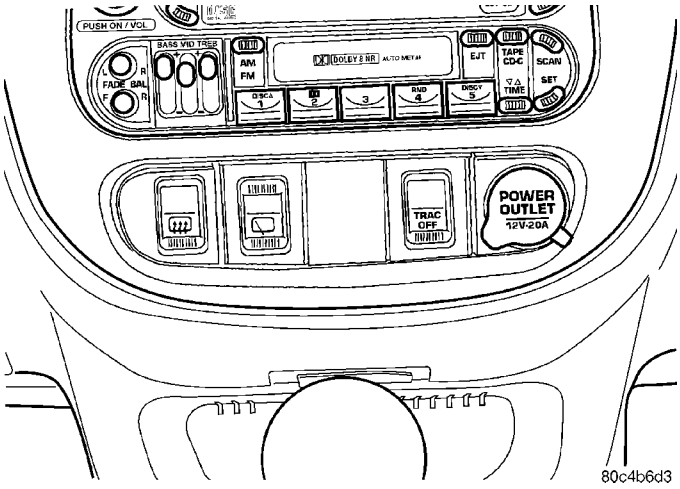

Fig. 1 Instrument Panel Mounted Cigar Lighter/ Power Outlet Location

An instrument panel mounted cigar lighter/power outlet receptacle (Fig. 1) is optional equipment on this model. On models equipped with the optional Smoker's Package, the cigar lighter knob and heating element are included. On models without the Smoker's Package, the cigar lighter receptacle is equipped

CIGAR LIGHTER/POWER OUTLET (Continued)

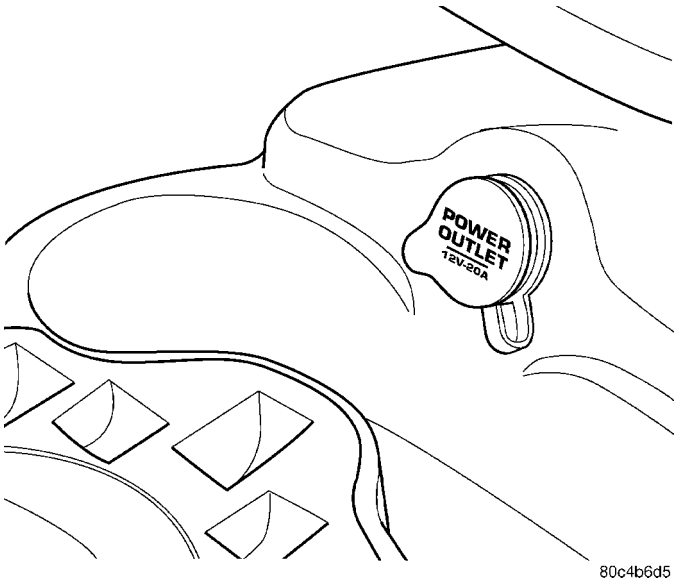

Fig. 2 Console Mounted Power Outlet Location

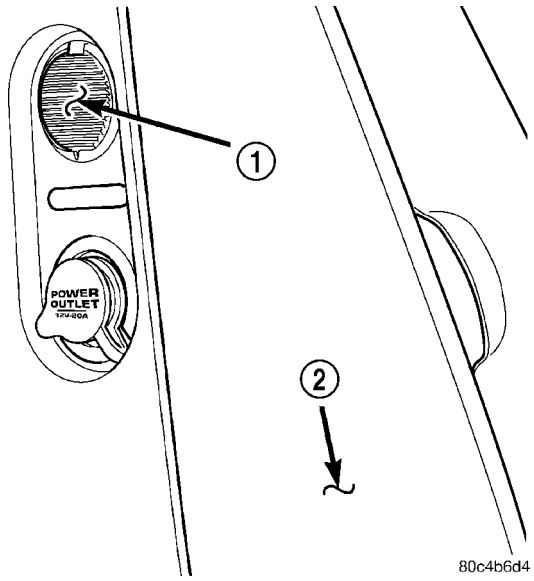

Fig. 3 Rear Cargo Area Power Outlet Location

1 - CARGO LAMP
2 - SPARE TIRE JACK COVER

with a snap fit plastic cap and is treated as an auxiliary power outlet. The cigar lighter receptacle is installed in the instrument panel accessory switch bezel, which is located near the bottom of the instrument panel center stack area, below the radio. The cigar lighter base is secured by a snap fit within the center lower bezel. This power outlet has a constant 12 volt battery feed.

The cigar lighter receptacle is serviced with the accessory switch bezel and if defective, the entire switch bezel must be replaced. The plastic cap and the knob and heating element unit are available for service replacement. These components cannot be repaired and, if faulty or damaged, they must be replaced.

FRONT CONSOLE AND REAR CARGO MOUNTED

A front console mounted power outlet is standard equipment and a rear cargo area power outlet is optional equipment on this model. The front console mounted power outlet is mounted near the front of the console just in front of the cup holders (Fig. 2). This outlet can be used as a cigar lighter or power outlet, but only has 12 volt battery voltage when the ignition is in the ON or ACC positions. The rear power outlet is installed in the right rear quarter trim panel, near the spare tire jack (Fig. 3). The power outlet base and mount are secured by a snap fit within the quarter trim panel. A plastic protective cap snaps into the power outlet base when the power outlet is not being used, and hangs from the power outlet base mount by an integral bail strap while the power outlet is in use. While the power outlet is very similar to a cigar lighter base unit, it does not include the two small spring-clip retainers inside the bottom of the receptacle shell that are used to secure the cigar lighter heating element to the insulated contact. It has 12 volt battery voltage when the ignition is in the ON or ACC positions.

OPERATION

CIGAR LIGHTER/POWER OUTLET (INSTRUMENT PANEL AND CONSOLE MOUNTED)

The cigar lighter consists of two major components: a knob and heating element unit, and the cigar lighter base or receptacle shell. The receptacle shell is connected to ground, and an insulated contact in the bottom of the shell is connected to battery current.

The cigar lighter knob and heating element are encased within a spring-loaded housing, which also features a sliding protective heat shield. When the knob and heating element are inserted in the receptacle shell, the heating element resistor coil is grounded through its housing to the receptacle shell. If the cigar lighter knob is pushed inward, the heat shield slides up toward the knob exposing the heating element, and the heating element extends from the housing toward the insulated contact in the bottom of the receptacle shell.

Two small spring-clip retainers are located on either side of the insulated contact inside the bottom of the receptacle shell. These clips engage and hold the heating element against the insulated contact long enough for the resistor coil to heat up. When the heating element is engaged with the contact, battery current can flow through the resistor coil to ground, causing the resistor coil to heat.

CIGAR LIGHTER/POWER OUTLET (Continued)

When the resistor coil becomes sufficiently heated, excess heat radiates from the heating element causing the spring-clips to expand. Once the spring-clips expand far enough to release the heating element, the spring-loaded housing forces the knob and heating element to pop back outward to their relaxed position. When the cigar lighter knob and element are pulled out of the receptacle shell, the protective heat shield slides downward on the housing so that the heating element is recessed and shielded around its circumference for safety.

POWER OUTLET (REAR CARGO AREA MOUNTED)

The power outlet base or receptacle shell is connected to ground, and an insulated contact in the bottom of the shell is connected to battery current. The power outlet receives battery voltage from a fuse in the Power Distribution Center (PDC) through a fuse in the fuse block when the ignition is in the ON or ACC positions.

REMOVAL

This procedure applies to the **Front Console and Rear Cargo Area** mounted outlets on this vehicle. If the instrument panel mounted cigar lighter/power outlet is defective, the entire accessory switch bezel must be replaced. Refer to Instrument Panel Systems, Removal and Installation, Accessory Switch Bezel.

(1) Disconnect and isolate the battery negative cable.

(2) Look inside and note position of the retaining bosses (Fig. 4).

(3) Using external snap ring pliers with 90 degree tips. Insert pliers with tips against bosses and squeeze forcing bosses out of base.

(4) Pull out the base through mounting ring by gently rocking pliers. A tool can be made to do the same. Refer to (Fig. 5).

(5) Disconnect the base wires.

(6) Set base aside and remove base mount ring.

INSTALLATION

This procedure applies to the **Front Console and Rear Cargo Area** mounted outlets on this vehicle. If the instrument panel mounted cigar lighter/power outlet is defective, the entire accessory switch bezel must be replaced. Refer to Instrument Panel Systems, Removal and Installation, Accessory Switch Bezel.

(1) Position mount ring to the instrument panel and feed the wires through ring. Index the cap and the mount ring with the index tab at 9 o'clock to the key in the instrument panel. Install the ring.

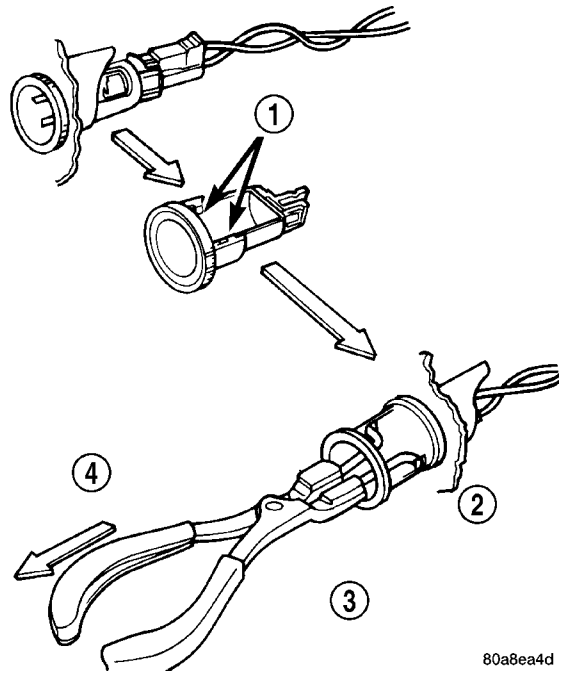

Fig. 4 Cigar Lighter/Power Outlet Base Removal

1 - RETAINING BOSSES-ENGAGE PLIERS HERE
2 - PARTIALLY REMOVED
3 - EXTERNAL SNAP-RING PLIERS
4 - PULL BASE OUT-THROUGH MOUNTING RING

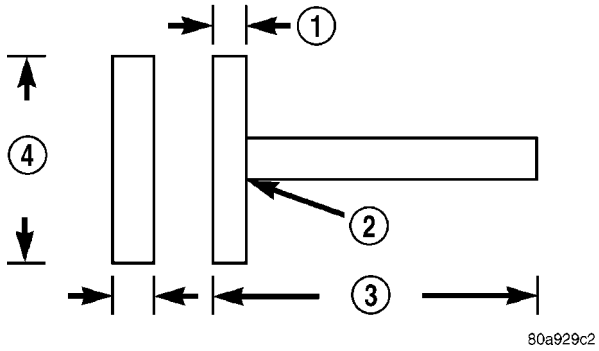

Fig. 5 Tool For Cigar Lighter/Power Outlet Removal

1 - 2.5MM (3/32 INS.)
2 - WELD
3 - 100MM (4 INS.)
4 - 22.25 TO 22.45MM (7/8 TO 57/64 INS.)

(2) Connect wires to base. Orient base alignment rib at 11 o'clock to mate the groove in mount ring at the same location

(3) Push base into the bezel till it locks.

(4) Install cigar lighter cap.

(5) Connect the battery negative cable.

FUSE BLOCK

DESCRIPTION

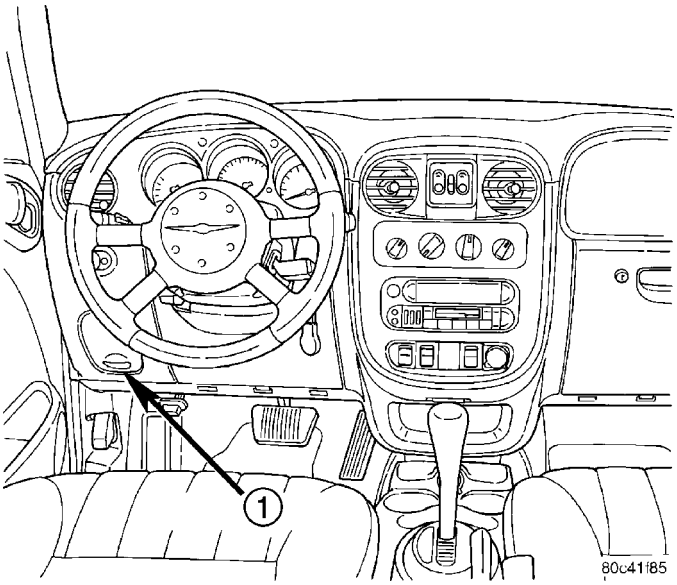

Fig. 6 Fuse Block Location

1 - FUSE PANEL

An electrical Fuse Block is located in the left front lower instrument panel (Fig. 6). It serves to simplify and centralize numerous electrical components, as well as to distribute electrical current to many of the accessory systems in the vehicle.

The Fuse Block is positioned on a mounting bracket up and under the left instrument panel. It is secured by two screws. The fuse block is concealed behind a fuse panel cover. The fuse panel cover is a snap-fit access cover that conceals the fuse block fuses. A fuse layout placard is on the back of the end cap to ensure proper fuse identification.

OPERATION

The fuse block houses blade-type fuses and automatic resetting circuit breakers. Internal connection of all the fuse block circuits is accomplished by an intricate network of hard wiring and bus bars. Refer to Wiring Diagrams for complete circuit diagrams.

The fuses and circuit breakers are available for service replacement. The fuse block unit cannot be repaired and is only serviced as an assembly. If any circuit or the fuse block housing is faulty or damaged, the entire fuse block and instrument panel wire harness assembly must be replaced.

REMOVAL

WARNING: ON VEHICLES EQUIPPED WITH AIRBAGS, REFER TO RESTRAINT SYSTEMS BEFORE ATTEMPTING ANY STEERING COLUMN OR INSTRUMENT PANEL COMPONENT DIAGNOSIS OR SERVICE. FAILURE TO TAKE THE PROPER PRECAUTIONS COULD RESULT IN ACCIDENTAL AIRBAG DEPLOYMENT AND POSSIBLE PERSONAL INJURY.

The Fuse Block is serviced with the instrument panel wire harness. If service is required to the fuse block, the entire instrument panel harness must be replaced.

(1) Disconnect and isolate the battery negative cable.

(2) Remove the instrument panel from the vehicle (Refer to 23 - BODY/INSTRUMENT PANEL/INSTRUMENT PANEL ASSEMBLY - REMOVAL).

(3) With the instrument panel on the bench, de-trim the instrument panel enough to gain access to all screws and connectors to remove instrument panel wire harness with fuse block.

INSTALLATION

WARNING: ON VEHICLES EQUIPPED WITH AIRBAGS, REFER TO RESTRAINT SYSTEMS BEFORE ATTEMPTING ANY STEERING COLUMN OR INSTRUMENT PANEL COMPONENT DIAGNOSIS OR SERVICE. FAILURE TO TAKE THE PROPER PRECAUTIONS COULD RESULT IN ACCIDENTAL AIRBAG DEPLOYMENT AND POSSIBLE PERSONAL INJURY.

(1) Install the new wire harness and fuse block.

(2) Re-trim the instrument panel with what was necessary for harness removal.

(3) Install instrument panel into vehicle (Refer to 23 - BODY/INSTRUMENT PANEL/INSTRUMENT PANEL ASSEMBLY - INSTALLATION).

Ensure that the wire terminals and connectors are in good condition and connectors are properly installed.

(4) Connect the battery negative cable.

IOD FUSE

DESCRIPTION

All vehicles are equipped with an Ignition-Off Draw (IOD) fuse that is disconnected within the Power Distribution Center (PDC) when the vehicle is shipped from the factory. Dealer personnel are to reconnect the IOD fuse in the PDC as part of the preparation procedures performed just prior to new vehicle delivery.

OPERATION

The term ignition-off draw identifies a normal condition where power is being drained from the battery with the ignition switch in the Off position. The IOD fuse feeds the memory and sleep mode functions for some of the electronic modules in the vehicle as well

IOD FUSE (Continued)

as various other accessories that require battery current when the ignition switch is in the Off position, including the clock. The only reason the IOD fuse is disconnected is to reduce the normal IOD of the vehicle electrical system during new vehicle transportation and pre-delivery storage to reduce battery depletion, while still allowing vehicle operation so that the vehicle can be loaded, unloaded and moved as needed by both vehicle transportation company and dealer personnel.

The IOD fuse is disconnected from PDC fuse cavity 18 when the vehicle is shipped from the assembly plant. Dealer personnel must reconnect the IOD fuse when the vehicle is being prepared for delivery in order to restore full electrical system operation. Once the vehicle is prepared for delivery, the IOD function of this fuse becomes transparent and the fuse that has been assigned the IOD designation becomes only another Fused B(+) circuit fuse. The IOD fuse serves no useful purpose to the dealer technician in the service or diagnosis of any vehicle system or condition, other than the same purpose as that of any other standard circuit protection device.

The IOD fuse can be used by the vehicle owner as a convenient means of reducing battery depletion when a vehicle is to be stored for periods not to exceed about thirty days. However, it must be remembered that disconnecting the IOD fuse will not eliminate IOD, but only reduce this normal condition. If a vehicle will be stored for more than about thirty days, the battery negative cable should be disconnected to eliminate normal IOD; and, the battery should be tested and recharged at regular intervals during the vehicle storage period to prevent the battery from becoming discharged or damaged. Refer to **Battery** for the location of additional service information covering the battery.

REMOVAL

NOTE: When removing or installing the IOD fuse, it is important that the ignition switch be in the Off position. Failure to place the ignition switch in the Off position can cause the radio display to become scrambled when the IOD fuse is installed. Removing and installing the IOD fuse again with the ignition switch in the Off position will usually correct the scrambled radio display condition.

(1) Turn the ignition switch to the Off position.

(2) Remove the cover from the Power Distribution Center (PDC).

(3) Remove fuse 18 from the PDC.

INSTALLATION

(1) Insert fuse 18 into the Power Distribution Center (PDC).

(2) Install the cover to the PDC.

POWER DISTRIBUTION CENTER

DESCRIPTION

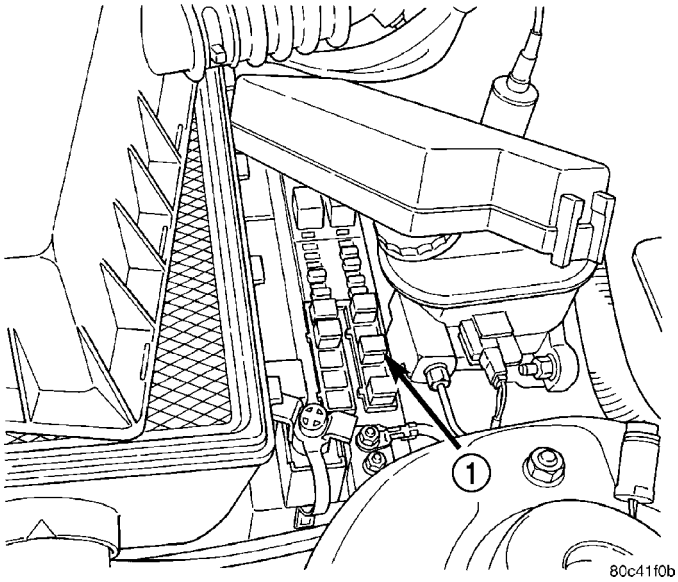

Fig. 7 Power Distribution Center (PDC) Location

1 - PDC

All of the electrical current distributed throughout this vehicle is directed through the standard equipment Power Distribution Center (PDC) (Fig. 7). The molded plastic PDC housing is located in the left front corner of the engine compartment, just behind the air cleaner housing and the battery. The PDC housing has a molded plastic cover. The PDC cover is easily removed for service access and has a convenient fuse and relay layout label affixed to the inside surface of the cover to ensure proper component identification.

The PDC housing is secured to the left inner fender well an indexing pin and one screw. All of the PDC outputs are through the integral engine compartment wire harness.

OPERATION

All of the current from the generator cable connection goes to the battery through a 10 gauge fusible link that is secured with a nut to the positive battery terminal at the starter. The PDC houses up to ten six fuse cartridges, which replace all in-line fusible links. The PDC also houses up to twelve blade-type fuses, up to two full International Standards Organization (ISO) relays, and up to eight mini International Standards Organization (ISO) relays. Internal connection of all the PDC circuits is accomplished by an intricate network of hard wiring and bus bars. Refer to Wiring Diagrams for complete circuit diagrams.

POWER DISTRIBUTION CENTER (Continued)

The fusible link, fuses and relays are available for service replacement. The PDC unit cannot be repaired and is only serviced as a unit with the engine compartment wire harness. If the PDC is faulty or damaged, the engine compartment wire harness assembly must be replaced.

REMOVAL

The Power Distribution Center (PDC) is serviced as a unit with the engine compartment wire harness. If any internal circuit of the PDC or the PDC housing is faulty or damaged, the entire PDC and engine compartment wire harness unit must be replaced.

(1) Open hood.

(2) Disconnect and isolate the battery negative cable.

(3) Disconnect each of the engine compartment wire harness connectors. Refer to Wiring Diagrams for more information on the locations of the affected connectors.

(4) Remove the fasteners that secure each of the engine compartment wire harness ground eyelets to the vehicle body and chassis components. Refer to Wiring Diagrams for more information on the ground eyelet locations.

(5) Disengage each of the retainers that secure the engine compartment wire harness to the vehicle body and chassis components. Refer to Wiring Diagrams for more information on the retainer locations.

(6) Disengage and remove the PDC housing from its mounting bracket.

(7) Remove the PDC and the engine compartment wire harness from the engine compartment as a unit.

INSTALLATION

The Power Distribution Center (PDC) is serviced as a unit with the engine compartment wire harness. If any internal circuit of the PDC or the PDC housing is faulty or damaged, the entire PDC and engine compartment wire harness unit must be replaced.

NOTE: If the power distribution center (PDC) is being replaced with a new unit, be certain to transfer each of the fuses and relays from the old power distribution center to the proper cavities of the new power distribution center. Refer to Wiring Diagrams for the proper power distribution center cavity assignments.

(1) Position the PDC in the engine compartment.

(2) Align the PDC on its mounting bracket and install.

(3) Route the engine compartment wire harness from the PDC through the engine compartment, engaging each of the harness retainers to the mounting provisions in the vehicle body and chassis components. Refer to Wiring Diagrams for more information on the harness routing and retainer locations.

(4) Install and tighten the fasteners that secure each of the engine compartment wire harness ground eyelets to the vehicle body and chassis components. Refer to Wiring Diagrams for more information on the ground eyelet locations.

(5) Reconnect each of the engine compartment wire harness connectors. Refer to Wiring Diagrams for more information on the locations of the affected connectors.

(6) Torque nut retaining positive battery cable at PDC to 96 - 141 N·m (85 - 130 in. lbs.).

(7) Reconnect the battery negative cable.

(8) Close hood.

(9) Verify vehicle and system operation.

RELAY

REMOVAL

(1) Disconnect and isolate the battery negative cable.

(2) Remove cover from Power Distribution Center (PDC).

(3) Using special tool C-4817, grip the relay by the sides and pull upward with an even effort (Fig. 8).

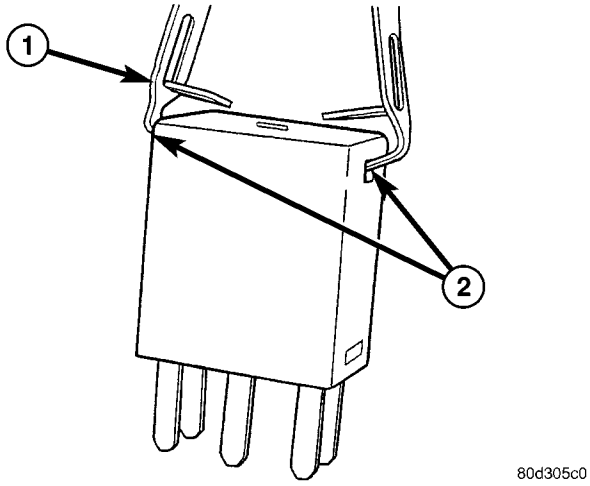

Fig. 8 RELAY REMOVAL

1 - SPECIAL TOOL C-4817
2 - RELAY

INSTALLATION

(1) Align relay with Power Distribution Center (PDC) and press into position.

(2) Install cover to PDC.

(3) Connect battery negative cable.

ENGINE

TABLE OF CONTENTS

page

ENGINE 1.6L SOHC 1
ENGINE 2.0L DOHC 73
ENGINE 2.4L DOHC 149

ENGINE 1.6L SOHC

TABLE OF CONTENTS

page

ENGINE 1.6L SOHC
DESCRIPTION 3
DIAGNOSIS AND TESTING
DIAGNOSIS AND TESTING - INTRODUCTION 3
DIAGNOSIS AND TESTING - ENGINE PERFORMANCE 4
DIAGNOSIS AND TESTING - ENGINE MECHANICAL 6
DIAGNOSIS AND TESTING - CYLINDER COMPRESSION PRESSURE TEST 8
DIAGNOSIS AND TESTING - CYLINDER COMBUSTION PRESSURE LEAKAGE TEST 9
DIAGNOSIS AND TESTING—CYLINDER HEAD GASKET 9
DIAGNOSIS AND TESTING - LASH ADJUSTER NOISE DIAGNOSIS 9
DIAGNOSIS AND TESTING - ENGINE OIL LEAK INSPECTION 10
STANDARD PROCEDURE
STANDARD PROCEDURE - REPAIR OF DAMAGED OR WORN THREADS 11
STANDARD PROCEDURE - HYDROSTATIC LOCKED ENGINE 11
STANDARD PROCEDURE - FORM-IN-PLACE GASKETS AND SEALERS 11
STANDARD PROCEDURE - ENGINE GASKET SURFACE PREPARATION 12
STANDARD PROCEDURE - MEASURING BEARING CLEARANCE USING PLASTIGAGE 13
STANDARD PROCEDURE - ENGINE CORE AND OIL GALLERY PLUGS 13
REMOVAL - ENGINE ASSEMBLY 13
INSTALLATION - ENGINE ASSEMBLY 15
SPECIFICATIONS
1.6L SOHC ENGINE 17
TORQUE 21
SPECIAL TOOLS
1.6L SOHC ENGINE 21
AIR CLEANER ELEMENT
REMOVAL 25
INSTALLATION 25
AIR CLEANER HOUSING
REMOVAL 25
INSTALLATION 26
CYLINDER HEAD
REMOVAL - CYLINDER HEAD 26
CLEANING 27
INSPECTION 27
INSTALLATION - CYLINDER HEAD 28
CYLINDER HEAD COVER
REMOVAL 31
CLEANING 31
INSPECTION 31
INSTALLATION 31
SPARK PLUG TUBE SEAL
DESCRIPTION 32
REMOVAL 32
INSTALLATION 32
SPARK PLUG TUBE
REMOVAL 33
INSTALLATION 33
ROCKER ARM SHAFT / ROCKER ARM / LASH ADJUSTER
DESCRIPTION 34
REMOVAL 34
INSTALLATION 35
CAMSHAFT
REMOVAL 35
INSPECTION 36
INSTALLATION 36
VALVE SPRINGS AND SEALS (ON VEHICLE SERVICE)
STANDARD PROCEDURE - VALVE SPRINGS AND SEALS (ON VEHICLE SERVICE) 37

VALVE SPRINGS AND SEALS (CYLINDER HEAD REMOVED)
STANDARD PROCEDURE - VALVE SPRINGS AND SEALS (CYLINDER HEAD REMOVED) . 39
INSPECTION . . . 39
INTAKE/EXHAUST VALVES & SEATS
STANDARD PROCEDURE - VALVE AND VALVE SEAT REFACING . . . 40
ENGINE BLOCK
DESCRIPTION . . . 41
STANDARD PROCEDURE - CYLINDER BORE HONING . . . 41
CLEANING . . . 43
INSPECTION . . . 43
CRANKSHAFT MAIN BEARINGS
DESCRIPTION . . . 44
CRANKSHAFT
DESCRIPTION . . . 44
STANDARD PROCEDURE - CRANKSHAFT END PLAY . . . 44
REMOVAL . . . 44
INSPECTION . . . 45
INSTALLATION . . . 45
CRANKSHAFT OIL SEAL - FRONT
REMOVAL . . . 47
INSTALLATION . . . 47
CRANKSHAFT OIL SEAL - REAR
REMOVAL . . . 47
INSTALLATION . . . 47
PISTON & CONNECTING ROD
DESCRIPTION . . . 48
STANDARD PROCEDURE
STANDARD PROCEDURE - CONNECTING ROD AND BEARING - FITTING . . . 48
STANDARD PROCEDURE - CYLINDER BORE AND PISTON - FITTING . . . 48
REMOVAL . . . 49
INSTALLATION . . . 50
PISTON RINGS
STANDARD PROCEDURE - PISTON RING - FITTING . . . 50
REMOVAL . . . 51
INSTALLATION . . . 51
VIBRATION DAMPER
REMOVAL . . . 52
INSTALLATION . . . 52
ENGINE MOUNTING
DESCRIPTION . . . 52
TORQUE STRUTS
REMOVAL . . . 53
INSTALLATION . . . 54
ADJUSTMENTS
ADJUSTMENT . . . 54
RIGHT ENGINE MOUNT BRACKET
REMOVAL . . . 54
INSTALLATION . . . 55
RIGHT MOUNT
REMOVAL . . . 55
INSTALLATION . . . 55
LEFT MOUNT
REMOVAL . . . 56
INSTALLATION . . . 56
LUBRICATION
DESCRIPTION . . . 57
OPERATION . . . 57
DIAGNOSIS AND TESTING - CHECKING ENGINE OIL PRESSURE . . . 57
OIL FILTER CARTRIDGE
REMOVAL . . . 59
INSTALLATION . . . 59
OIL FILTER CARTRIDGE HOUSING
DESCRIPTION . . . 60
REMOVAL . . . 60
INSTALLATION . . . 60
OIL PAN
REMOVAL . . . 60
INSTALLATION . . . 61
OIL PUMP
REMOVAL . . . 62
INSTALLATION . . . 62
OIL PUMP PICK-UP
REMOVAL . . . 62
INSTALLATION . . . 62
INTAKE MANIFOLD
REMOVAL
REMOVAL - UPPER INTAKE MANIFOLD . . . 63
REMOVAL - LOWER INTAKE MANIFOLD . . . 63
INSTALLATION
INSTALLATION - UPPER INTAKE MANIFOLD . 63
INSTALLATION - LOWER INTAKE MANIFOLD . . . 63
EXHAUST MANIFOLD
REMOVAL . . . 64
CLEANING . . . 64
INSPECTION . . . 64
INSTALLATION . . . 64
VALVE TIMING
DESCRIPTION . . . 65
STANDARD PROCEDURE - VALVE TIMING VERIFICATION . . . 65
TIMING CHAIN COVER
REMOVAL . . . 65
INSTALLATION . . . 66
TIMING CHAIN/GUIDES/SPROCKETS
REMOVAL
REMOVAL - TIMING CHAIN AND GUIDES . . . 67
REMOVAL - CAMSHAFT SPROCKET . . . 68
REMOVAL - CRANKSHAFT SPROCKET . . . 69
INSTALLATION
INSTALLATION - CRANKSHAFT SPROCKET . 69
INSTALLATION - CAMSHAFT SPROCKET . . . 69
INSTALLATION - TIMING CHAIN AND GUIDES . . . 70

ENGINE 1.6L SOHC

DESCRIPTION

The 1.6 Liter (97.6 cu. in.) in-line four cylinder engine is a single over head camshaft with four valves per cylinder design. The engine does not have provisions for a free wheeling valve train.

The cylinders are numbered from front of the engine to the rear. The firing order is 1–3–4–2.

The engine identification number is stamped onto a machined pad located on the right front of the cylinder block below the cylinder head sealing surface (Fig. 1).

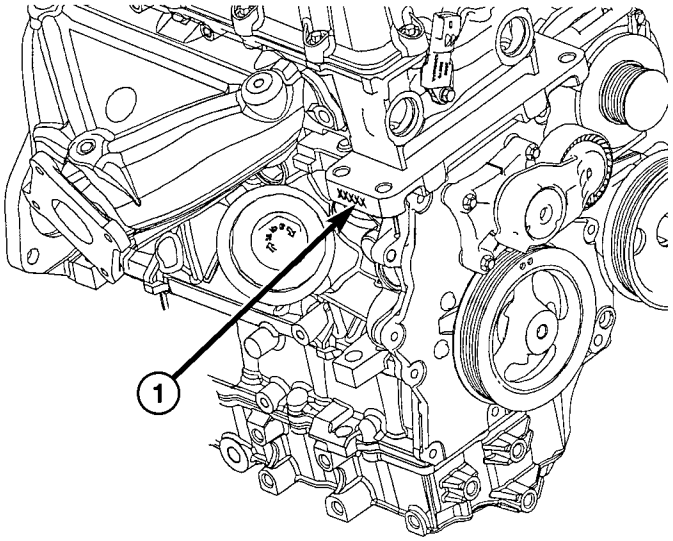

Fig. 1 Engine Identification

1 - LOCATION OF V.I.N.

DIAGNOSIS AND TESTING

DIAGNOSIS AND TESTING - INTRODUCTION

Engine diagnosis is helpful in determining the causes of malfunctions not detected and remedied by routine maintenance.

These malfunctions may be classified as either mechanical (e.g., a strange noise), or performance (e.g., engine idles rough and stalls).

Refer to the Engine Mechanical and the Engine Performance diagnostic charts, for possible causes and corrections of malfunctions (Refer to 9 - ENGINE - DIAGNOSIS AND TESTING - MECHANICAL) (Refer to 9 - ENGINE - DIAGNOSIS AND TESTING - PERFORMANCE).

For fuel system diagnosis, (Refer to 14 - FUEL SYSTEM/FUEL DELIVERY - DIAGNOSIS AND TESTING).

Additional tests and diagnostic procedures may be necessary for specific engine malfunctions that cannot be isolated with the Service Diagnosis charts. Information concerning additional tests and diagnosis is provided within the following:

- Cylinder Compression Pressure Test
- Cylinder Combustion Pressure Leakage Test
- Engine Cylinder Head Gasket Failure Diagnosis
- Lash Adjuster Noise Diagnosis
- Engine Oil Leak Inspection

ENGINE 1.6L SOHC (Continued)

DIAGNOSIS AND TESTING - ENGINE PERFORMANCE

CONDITION	POSSIBLE CAUSE	CORRECTION
ENGINE WILL NOT START	1. Weak battery.	1. Test battery. Charge or replace as necessary. (Refer to 8 - ELECTRICAL/BATTERY SYSTEM - DIAGNOSIS AND TESTING)
	2. Corroded or loose battery connections.	2. Clean and tighten battery connections. Apply a coat of light mineral grease to terminals.
	3. Faulty starter.	3. Test starting system. (Refer to 8 - ELECTRICAL/STARTING - DIAGNOSIS AND TESTING)
	4. Faulty coil(s) or control unit.	4. Test and replace as needed. (Refer to Appropriate Diagnostic Information)
	5. Incorrect spark plug gap.	5. Set gap. (Refer to 8 - ELECTRICAL/IGNITION CONTROL - SPECIFICATIONS)
	6. Contamination in fuel system.	6. Clean system and replace fuel filter.
	7. Faulty fuel pump.	7. Test fuel pump and replace as needed. (Refer to Appropriate Diagnostic Information)
	8. Incorrect engine timing.	8. Check for a skipped timing chain.
ENGINE STALLS OR IDLES ROUGH	1. Incorrect fuel mixture.	1. (Refer to Appropriate Diagnostic Information)
	2. Intake manifold leakage.	2. Inspect intake manifold, manifold gasket, and vacuum hoses.
	3. Faulty ignition coil(s).	3. Test and replace as necessary. (Refer to Appropriate Diagnostic Information)

ENGINE 1.6L SOHC (Continued)

CONDITION	POSSIBLE CAUSE	CORRECTION
ENGINE LOSS OF POWER	1. Dirty or incorrectly gapped plugs.	1. Clean plugs and set gap.
	2. Contamination in fuel system.	2. Clean system and replace fuel filter.
	3. Faulty fuel pump.	3. Test and replace as necessary. (Refer to Appropriate Diagnostic Information)
	4. Incorrect valve timing.	4. Correct valve timing.
	5. Leaking cylinder head gasket.	5. Replace cylinder head gasket.
	6. Low compression.	6. Test compression of each cylinder.
	7. Burned, warped, or pitted valves.	7. Replace valves.
	8. Plugged or restricted exhaust system.	8. Perform exhaust restriction test. (Refer to 11 - EXHAUST SYSTEM - DIAGNOSIS AND TESTING) Install new parts, as necessary.
	9. Faulty ignition coil(s).	9. Test and replace as necessary. (Refer to Appropriate Diagnostic Information)
ENGINE MISSES ON ACCELERATION	1. Dirty or incorrectly gapped spark plugs.	1. Clean spark plugs and set gap.
	2. Contamination in Fuel System.	2. Clean fuel system and replace fuel filter.
	3. Burned, warped, or pitted valves.	3. Replace valves.
	4. Faulty ignition coil(s).	4. Test and replace as necessary. (Refer to Appropriate Diagnostic Information)
ENGINE MISSES AT HIGH SPEED	1. Dirty or incorrect spark plug gap.	1. Clean spark plugs and set gap.
	2. Faulty ignition coil(s).	2. Test and replace as necessary. (Refer to Appropriate Diagnostic Information)
	3. Dirty fuel injector(s).	3. Test and replace as necessary. (Refer to Appropriate Diagnostic Information)
	4. Contamination in fuel system.	4. Clean system and replace fuel filter.

ENGINE 1.6L SOHC (Continued)

DIAGNOSIS AND TESTING - ENGINE MECHANICAL

CONDITION	POSSIBLE CAUSES	CORRECTION
NOISY VALVES	1. High or low oil level in crankcase.	1. Check and correct engine oil level.
	2. Thin or diluted oil.	2. Change oil to correct viscosity.
	3. Thick oil	3. (a) Change engine oil and filter. (b) Run engine to operating temperature. (c) Change engine oil and filter again.
	4. Low oil pressure.	4. Check and correct engine oil level.
	5. Dirt in lash adjusters.	5. Replace rocker arm/hydraulic lash adjuster assembly.
	6. Worn rocker arms.	6. Inspect oil supply to rocker arms.
	7. Worn lash adjusters.	7. Install new rocker arm/hydraulic lash adjuster assembly.
	8. Worn valve guides.	8. Replace cylinder head.
	9. Excessive runout of valve seats on valve faces.	9. Grind valves, replace cylinder head.
	10. Missing adjuster pivot.	10. Replace rocker arm/hydraulic lash adjuster assembly.
CONNECTING ROD NOISE	1. Insufficient oil supply.	1. Check engine oil level.
	2. Low oil pressure.	2. Check engine oil level. Inspect oil pump relief valve and spring.
	3. Thin or diluted oil.	3. Change oil to correct viscosity.
	4. Thick oil	4. (a) Change engine oil and filter. (b) Run engine to operating temperature. (c) Change engine oil and filter again.
	5. Excessive bearing clearance.	5. Measure bearings for correct clearance. Repair as necessary.
	6. Connecting rod journal out-of-round.	6. Replace crankshaft or grind surface.
	7. Misaligned connecting rods.	7. Replace bent connecting rods.

ENGINE 1.6L SOHC (Continued)

CONDITION	POSSIBLE CAUSES	CORRECTION
MAIN BEARING NOISE	1. Insufficient oil supply.	1. Check engine oil level.
	2. Low oil pressure.	2. Check engine oil level. Inspect oil pump relief valve and spring.
	3. Thin or diluted oil.	3. Change oil to correct viscosity.
	4. Thick oil	4. (a) Change engine oil and filter. (b) Run engine to operating temperature. (c) Change engine oil and filter again.
	5. Excessive bearing clearance.	5. Measure bearings for correct clearance. Repair as necessary.
	6. Excessive end play.	6. Check thrust bearing for wear on flanges.
	7. Crankshaft journal out-of-round or worn.	7. Replace crankshaft or grind journals.
	8. Loose flywheel or torque converter.	8. Tighten to correct torque.
OIL PRESSURE DROP	1. Low oil level.	1. Check engine oil level.
	2. Faulty oil pressure switch.	2. Install new oil pressure switch.
	3. Low oil pressure.	3. Check sending unit and main bearing oil clearance.
	4. Clogged oil filter.	4. Install new oil filter.
	5. Worn parts in oil pump.	5. Replace worn parts or pump.
	6. Thin or diluted oil.	6. Change oil to correct viscosity.
	7. Oil pump relief valve stuck.	7. Remove valve and inspect, clean, or replace.
	8. Oil pump suction tube loose.	8. Remove oil pan and install new tube or clean, if necessary.
	9. Oil pump cover warped or cracked.	9. Install new oil pump.
	10. Excessive bearing clearance.	10. Measure bearings for correct clearance.
OIL LEAKS	1. Misaligned or deteriorated gaskets.	1. Replace gasket(s).
	2. Loose fastener, broken or porous metal part.	2. Tighten, repair or replace the part.
	3. Misaligned or deteriorated cup or threaded plug.	3. Replace as necessary.

ENGINE 1.6L SOHC (Continued)

CONDITION	POSSIBLE CAUSES	CORRECTION
OIL CONSUMPTION OR SPARK PLUGS FOULED	1. PCV system malfunction.	1. Check system and repair as necessary. (Refer to 25 - EMISSIONS CONTROL/ EVAPORATIVE EMISSIONS/PCV VALVE - DIAGNOSIS AND TESTING)
	2. Worn, scuffed or broken rings.	2. Hone cylinder bores. Install new rings.
	3. Carbon in oil ring slots.	3. Install new rings.
	4. Rings fitted too tightly in grooves.	4. Remove rings and check grooves. If groove is not proper width, replace piston.
	5. Worn valve guide(s).	5. Replace cylinder head.
	6. Valve stem seal(s) worn or damaged.	6. Replace seal(s).

DIAGNOSIS AND TESTING - CYLINDER COMPRESSION PRESSURE TEST

The results of a cylinder compression pressure test can be utilized to diagnose several engine malfunctions.

Ensure the battery is completely charged and the engine starter motor is in good operating condition. Otherwise the indicated compression pressures may not be valid for diagnosis purposes.

(1) Check engine oil level and add oil if necessary.

(2) Drive the vehicle until engine reaches normal operating temperature. Select a route free from traffic and other forms of congestion, observe all traffic laws, and accelerate through the gears several times briskly.

CAUTION: When removing spark plugs, use Special Tool 8448 Protective Sleeve on extension (Fig. 2) or damage to spark plug tubes may result.

(3) Remove all spark plugs from engine. As spark plugs are being removed, check electrodes for abnormal firing indicators fouled, hot, oily, etc. Record cylinder number of spark plug for future reference.

(4) Remove the Auto Shutdown (ASD) relay from the PDC.

(5) Insert compression gauge adaptor Special Tool 8116 or the equivalent, into the #1 spark plug hole in cylinder head. Connect the 0–500 psi (Blue) pressure transducer (Special Tool CH7059) with cable adaptors to the DRBIII®. For Special Tool identification, (Refer to 9 - ENGINE - SPECIAL TOOLS).

(6) Crank engine until maximum pressure is reached on gauge. Record this pressure as #1 cylinder pressure.

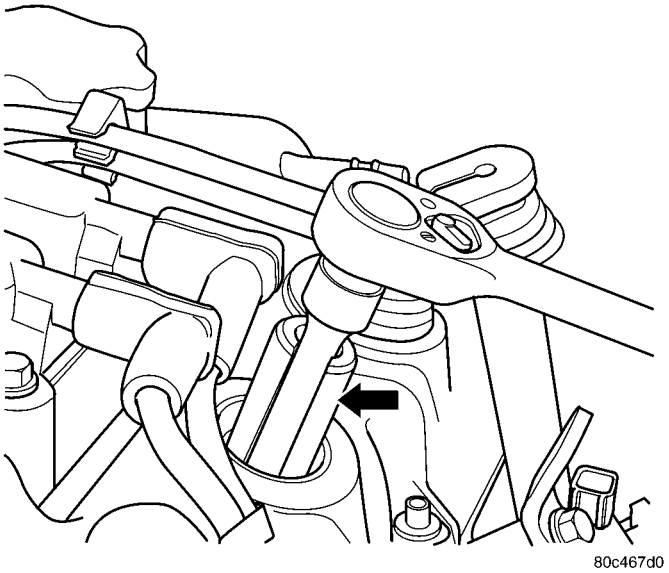

Fig. 2 Special Tool 8448 Protective Sleeve

(7) Repeat the previous step for all remaining cylinders.

(8) Compression should not be less than 689 kPa (100 psi) and not vary more than 25 percent from cylinder to cylinder.

(9) If one or more cylinders have abnormally low compression pressures, repeat the compression test.

(10) If the same cylinder or cylinders repeat an abnormally low reading on the second compression test, it could indicate the existence of a problem in the cylinder in question. **The recommended compression pressures are to be used only as a guide to diagnosing engine problems. An engine should not be disassembled to determine the cause of low compression unless some malfunction is present.**

ENGINE 1.6L SOHC (Continued)

DIAGNOSIS AND TESTING - CYLINDER COMBUSTION PRESSURE LEAKAGE TEST

The combustion pressure leakage test provides an accurate means for determining engine condition.

Combustion pressure leakage testing will detect:

- Exhaust and intake valve leaks (improper seating).
- Leaks between adjacent cylinders or into water jacket.
- Any causes for combustion/compression pressure loss.

WARNING: DO NOT REMOVE THE PRESSURE CAP WITH THE SYSTEM HOT AND UNDER PRESSURE BECAUSE SERIOUS BURNS FROM COOLANT CAN OCCUR.

Check the coolant level and fill as required. DO NOT install the pressure cap.

Start and operate the engine until it attains normal operating temperature, then turn the engine OFF.

Clean spark plug recesses with compressed air.

Remove the spark plugs.

Remove the oil filler cap.

Remove the air cleaner.

Calibrate the tester according to the manufacturer's instructions. The shop air source for testing should maintain 483 kPa (70 psi) minimum, 1,379 kPa (200 psi) maximum, with 552 kPa (80 psi) recommended.

Perform the test procedures on each cylinder according to the tester manufacturer's instructions. While testing, listen for pressurized air escaping through the throttle body, tailpipe and oil filler cap opening. Check for bubbles in the coolant.

All gauge pressure indications should be equal, with no more than 25% leakage per cylinder.

FOR EXAMPLE: At 552 kPa (80 psi) input pressure, a minimum of 414 kPa (60 psi) should be maintained in the cylinder.

DIAGNOSIS AND TESTING—CYLINDER HEAD GASKET

A cylinder head gasket leak can be located between adjacent cylinders or between a cylinder and the adjacent water jacket.

Possible indications of the cylinder head gasket leaking between adjacent cylinders are:

- Loss of engine power
- Engine misfiring
- Poor fuel economy

Possible indications of the cylinder head gasket leaking between a cylinder and an adjacent water jacket are:

- Engine overheating
- Loss of coolant
- Excessive steam (white smoke) emitting from exhaust
- Coolant foaming

CYLINDER-TO-CYLINDER LEAKAGE TEST

To determine if an engine cylinder head gasket is leaking between adjacent cylinders, follow the procedures in Cylinder Compression Pressure Test (Refer to 9 - ENGINE - DIAGNOSIS AND TESTING). An engine cylinder head gasket leaking between adjacent cylinders will result in approximately a 50–70% reduction in compression pressure.

CYLINDER-TO-WATER JACKET LEAKAGE TEST

WARNING: USE EXTREME CAUTION WHEN THE ENGINE IS OPERATING WITH COOLANT PRESSURE CAP REMOVED.

VISUAL TEST METHOD

With the engine cool, remove the coolant pressure cap. Start the engine and allow it to warm up until thermostat opens.

If a large combustion/compression pressure leak exists, bubbles will be visible in the coolant.

COOLING SYSTEM TESTER METHOD

WARNING: WITH COOLING SYSTEM TESTER IN PLACE, PRESSURE WILL BUILD UP FAST. EXCESSIVE PRESSURE BUILT UP, BY CONTINUOUS ENGINE OPERATION, MUST BE RELEASED TO A SAFE PRESSURE POINT. NEVER PERMIT PRESSURE TO EXCEED 138 kPa (20 psi).

Install Cooling System Tester 7700 or equivalent to pressure cap neck. Start the engine and observe the tester's pressure gauge. If gauge pulsates with every power stroke of a cylinder a combustion pressure leak is evident.

CHEMICAL TEST METHOD

Combustion leaks into the cooling system can also be checked by using Bloc-Chek Kit C-3685-A or equivalent. Perform test following the procedures supplied with the tool kit.

DIAGNOSIS AND TESTING - LASH ADJUSTER NOISE DIAGNOSIS

A tappet-like noise may be produced from several items. Check the following items.

(1) Engine oil level too high or too low. This may cause aerated oil to enter the adjusters and cause them to be spongy.

ENGINE 1.6L SOHC (Continued)

(2) Insufficient running time after rebuilding cylinder head. Low speed running up to 1 hour may be required.

(3) During this time, turn engine off and let set for a few minutes before restarting. Repeat this several times after engine has reached normal operating temperature.

(4) Low oil pressure.

(5) The oil restrictor (integral to the head gasket) in the vertical oil passage to the cylinder head is plugged with debris.

(6) Air ingested into oil due to broken or cracked oil pump pick up.

(7) Worn valve guides.

(8) Rocker arm ears contacting valve spring retainer.

(9) Rocker arm loose, adjuster stuck or at maximum extension and still leaves lash in the system.

(10) Faulty lash adjuster.

• Check lash adjusters for sponginess while installed in cylinder head. Depress part of rocker arm over adjuster. Normal adjusters should feel very firm. Spongy adjusters can be bottomed out easily.

• Remove suspected rocker arm/lash adjuster assembly, and replace as necessary.

DIAGNOSIS AND TESTING - ENGINE OIL LEAK INSPECTION

Begin with a thorough visual inspection of the engine, particularly at the area of the suspected leak. If an oil leak source is not readily identifiable, the following steps should be followed:

(1) Do not clean or degrease the engine at this time because some solvents may cause rubber to swell, temporarily stopping the leak.

(2) Add an oil soluble dye (use as recommended by manufacturer). Start the engine and let idle for approximately 15 minutes. Check the oil dipstick to make sure the dye is thoroughly mixed as indicated with a bright yellow color under a black light.

(3) Using a black light, inspect the entire engine for fluorescent dye, particularly at the suspected area of oil leak. If the oil leak is found and identified, repair as necessary.

(4) If dye is not observed, drive the vehicle at various speeds for approximately 24 km (15 miles), and repeat inspection.

(5) **If the oil leak source is not positively identified at this time**, proceed with the air leak detection test method as follows:

• Disconnect the fresh air hose (make-up air) at the cylinder head cover and plug or cap the nipple on the cover.

• Remove the PCV valve hose from the cylinder head cover. Cap or plug the PCV valve nipple on the cover.

• Attach an air hose with pressure gauge and regulator to the dipstick tube.

CAUTION: Do not subject the engine assembly to more than 20.6 kpa (3 PSI) of test pressure.

• Gradually apply air pressure from 1 psi to 2.5 psi maximum while applying soapy water at the suspected source. Adjust the regulator to the suitable test pressure that provides the best bubbles which will pinpoint the leak source. If the oil leak is detected and identified, repair per service manual procedures.

• If the leakage occurs at the crankshaft rear oil seal area, refer to the section, Inspection for Rear Seal Area Leak.

(6) If no leaks are detected, turn off the air supply. Remove the air hose, all plugs, and caps. Install the PCV valve and fresh air hose (make-up air). Proceed to next step.

(7) Clean the oil off the suspect oil leak area using a suitable solvent. Drive the vehicle at various speeds approximately 24 km (15 miles). Inspect the engine for signs of an oil leak by using a black light.

NOTE: If oil leakage is observed at the dipstick tube to block location; remove the tube, clean and reseal using Mopar® Stud & Bearing Mount (press fit tube applications only), and for O-ring style tubes, remove tube and replace the O-ring seal.

INSPECTION FOR REAR SEAL AREA LEAKS

Since it is sometimes difficult to determine the source of an oil leak in the rear seal area of the engine, a more involved inspection is necessary. The following steps should be followed to help pinpoint the source of the leak.

If the leakage occurs at the crankshaft rear oil seal area:

(1) Disconnect the battery.

(2) Raise the vehicle.

(3) Remove torque converter or clutch housing cover and inspect rear of block for evidence of oil. Use a black light to check for the oil leak. If a leak is present in this area, remove transmission for further inspection.

(a) Circular spray pattern generally indicates seal leakage or crankshaft damage.

(b) Where leakage tends to run straight down, possible causes are a porous block, oil gallery cup plug, bedplate to cylinder block mating surfaces and seal bore. See proper repair procedures for these items.

(4) If no leaks are detected, pressurize the crankcase as previously described.

ENGINE 1.6L SOHC (Continued)

CAUTION: Do not exceed 20.6 kPa (3 psi).

(5) If the leak is not detected, very slowly turn the crankshaft and watch for leakage. If a leak is detected between the crankshaft and seal while slowly turning the crankshaft, it is possible the crankshaft seal surface is damaged. The seal area on the crankshaft could have minor nicks or scratches that can be polished out with emery cloth.

CAUTION: Use extreme caution when crankshaft polishing is necessary to remove minor nicks and scratches. The crankshaft seal flange is especially machined to complement the function of the rear oil seal.

(6) For bubbles that remain steady with shaft rotation, no further inspection can be done until disassembled.

(7) After the oil leak root cause and appropriate corrective action have been identified, replace component(s) as necessary.

STANDARD PROCEDURE

STANDARD PROCEDURE - REPAIR OF DAMAGED OR WORN THREADS

Damaged or worn threads (excluding spark plug and camshaft bearing cap attaching threads) can be repaired. Essentially, this repair consists of drilling out worn or damaged threads, tapping the hole with a special Heli-Coil Tap, (or equivalent) and installing an insert into the tapped hole. This brings the hole back to its original thread size.

CAUTION: Be sure that the tapped holes maintain the original center line.

Heli-Coil tools and inserts are readily available from automotive parts jobbers.

STANDARD PROCEDURE - HYDROSTATIC LOCKED ENGINE

When an engine is suspected to be hydrostatically locked, regardless of what caused the problem, the following steps should be used.

CAUTION: DO NOT use starter motor to rotate the engine, severe damage may occur.

(1) Inspect air cleaner, induction system and intake manifold to insure system is dry and clear of foreign material.

(2) Remove negative battery cable.

(3) Place a shop towel around the spark plugs when removing them from the engine. This will catch any fluid that may possibly be in the cylinder under pressure.

(4) With all spark plugs removed, rotate engine crankshaft using a breaker bar and socket.

(5) Identify the fluid in the cylinder(s) (i.e., coolant, fuel, oil or other).

(6) Make sure all fluid has been removed from the cylinders. Inspect engine for damage (i.e., connecting rods, pistons, valves, etc.)

(7) Repair engine or components as necessary to prevent this problem from re-occurring.

CAUTION: Squirt approximately one teaspoon of oil into the cylinders, rotate engine to lubricate the cylinder walls to prevent damage on restart.

(8) Install new spark plugs.

(9) Drain engine oil and remove oil filter.

(10) Install a new oil filter.

(11) Fill engine with specified amount of approved oil.

(12) Connect negative battery cable.

(13) Start engine and check for any leaks.

STANDARD PROCEDURE - FORM-IN-PLACE GASKETS AND SEALERS

There are numerous places where form-in-place gaskets are used on the engine. Care must be taken when applying form-in-place gaskets to assure obtaining the desired results. **Do not use form-in-place gasket material unless specified.** Bead size, continuity, and location are of great importance. Too thin a bead can result in leakage while too much can result in spill-over which can break off and obstruct fluid feed lines. A continuous bead of the proper width is essential to obtain a leak-free gasket.

There are numerous types of form-in-place gasket materials that are used in the engine area. Mopar® Engine RTV GEN II, Mopar® ATF-RTV, and Mopar® Gasket Maker gasket materials, each have different properties and can not be used in place of the other.

MOPAR® ENGINE RTV GEN II is used to seal components exposed to engine oil. This material is a specially designed black silicone rubber RTV that retains adhesion and sealing properties when exposed to engine oil. Moisture in the air causes the material to cure. This material is available in three ounce tubes and has a shelf life of one year. After one year this material will not properly cure. Always inspect the package for the expiration date before use.

MOPAR® ATF RTV is a specifically designed black silicone rubber RTV that retains adhesion and sealing properties to seal components exposed to automatic transmission fluid, engine coolants, and moisture. This material is available in three ounce

tubes and has a shelf life of one year. After one year this material will not properly cure. Always inspect the package for the expiration date before use.

MOPAR® GASKET MAKER is an anaerobic type gasket material. The material cures in the absence of air when squeezed between two metallic surfaces. It will not cure if left in the uncovered tube. The anaerobic material is for use between two machined surfaces. Do not use on flexible metal flanges.

MOPAR® BED PLATE SEALANT is a unique (green-in-color) anaerobic type gasket material that is specially made to seal the area between the bedplate and cylinder block without disturbing the bearing clearance or alignment of these components. The material cures slowly in the absence of air when torqued between two metallic surfaces, and will rapidly cure when heat is applied.

MOPAR® GASKET SEALANT is a slow drying, permanently soft sealer. This material is recommended for sealing threaded fittings and gaskets against leakage of oil and coolant. Can be used on threaded and machined parts under all temperatures. This material is used on engines with multi-layer steel (MLS) cylinder head gaskets. This material also will prevent corrosion. Mopar® Gasket Sealant is available in a 13 oz. aerosol can or 4oz./16 oz. can w/applicator.

SEALER APPLICATION

Mopar® Gasket Maker material should be applied sparingly 1 mm (0.040 in.) diameter or less of sealant to one gasket surface. Be certain the material surrounds each mounting hole. Excess material can easily be wiped off. Components should be torqued in place within 15 minutes. The use of a locating dowel is recommended during assembly to prevent smearing material off the location.

Mopar® Engine RTV GEN II or ATF RTV gasket material should be applied in a continuous bead approximately 3 mm (0.120 in.) in diameter. All mounting holes must be circled. For corner sealing, a 3.17 or 6.35 mm (1/8 or 1/4 in.) drop is placed in the center of the gasket contact area. Uncured sealant may be removed with a shop towel. Components should be torqued in place while the sealant is still wet to the touch (within 10 minutes). The usage of a locating dowel is recommended during assembly to prevent smearing material off the location.

Mopar® Gasket Sealant in an aerosol can should be applied using a thin, even coat sprayed completely over both surfaces to be joined, and both sides of a gasket. Then proceed with assembly. Material in a can w/applicator can be brushed on evenly over the sealing surfaces. Material in an aerosol can should be used on engines with multi-layer steel gaskets.

STANDARD PROCEDURE - ENGINE GASKET SURFACE PREPARATION

To ensure engine gasket sealing, proper surface preparation must be performed, especially with the use of aluminum engine components and multi-layer steel cylinder head gaskets.

Never use the following to clean gasket surfaces:

- Metal scraper
- Abrasive pad or paper to clean cylinder block and head
- High speed power tool with an abrasive pad or a wire brush (Fig. 3)

NOTE: Multi-Layer Steel (MLS) head gaskets require a scratch free sealing surface.

Only use the following for cleaning gasket surfaces:

- Solvent or a commercially available gasket remover
- Plastic or wood scraper (Fig. 3)
- Drill motor with 3M Roloc™ Bristle Disc (white or yellow) (Fig. 3)

CAUTION: Excessive pressure or high RPM (beyond the recommended speed), can damage the sealing surfaces. The mild (white, 120 grit) bristle disc is recommended. If necessary, the medium (yellow, 80 grit) bristle disc may be used on cast iron surfaces with care.

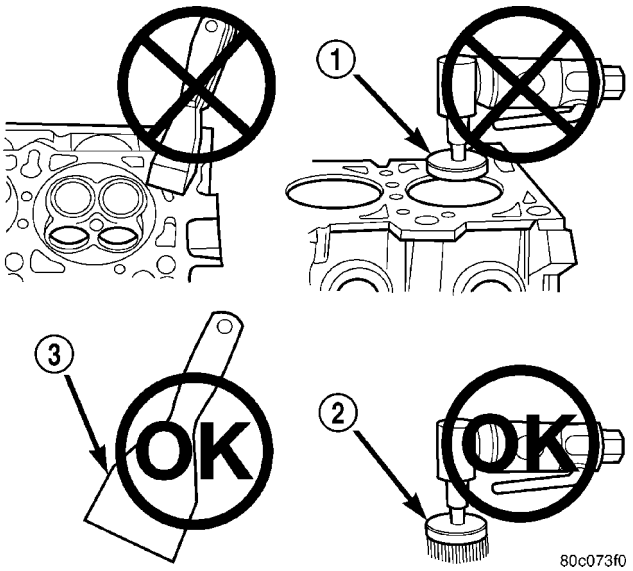

Fig. 3 Proper Tool Usage For Surface Preparation

1 - ABRASIVE PAD
2 - 3M ROLOC™ BRISTLE DISC
3 - PLASTIC/WOOD SCRAPER

ENGINE 1.6L SOHC (Continued)

STANDARD PROCEDURE - MEASURING BEARING CLEARANCE USING PLASTIGAGE

Engine crankshaft bearing clearances can be determined by use of Plastigage or equivalent. The following is the recommended procedure for the use of Plastigage:

(1) Remove oil film from surface to be checked. Plastigage is soluble in oil.

(2) Place a piece of Plastigage across the entire width of the bearing shell in the cap approximately 6.35 mm (1/4 in.) off center and away from the oil holes (Fig. 4). (In addition, suspected areas can be checked by placing the Plastigage in the suspected area). Torque the bearing cap bolts of the bearing being checked to the proper specifications.

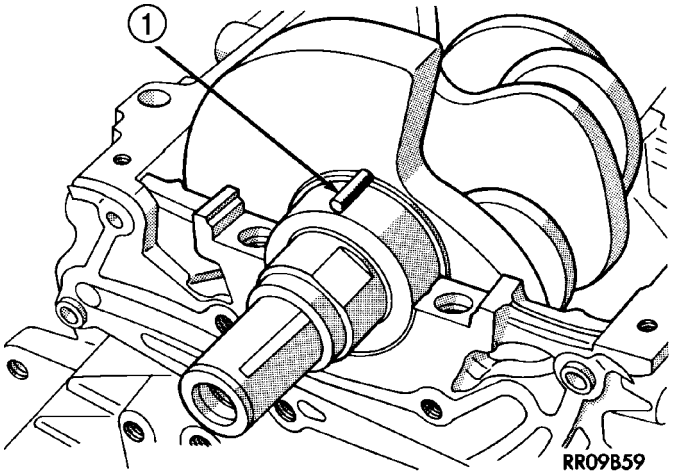

Fig. 4 Plastigage Placed in Lower Shell—Typical

1 - PLASTIGAGE

(3) Remove the bearing cap and compare the width of the flattened Plastigage with the metric scale provided on the package. Locate the band closest to the same width. This band shows the amount of clearance in thousandths of a millimeter. Differences in readings between the ends indicate the amount of taper present. Record all readings taken. Compare clearance measurements to specs found in engine specifications (Refer to 9 - ENGINE - SPECIFICATIONS). **Plastigage generally is accompanied by two scales. One scale is in inches, the other is a metric scale.**

NOTE: Plastigage is available in a variety of clearance ranges. Use the most appropriate range for the specifications you are checking.

(4) Install the proper crankshaft bearings to achieve the specified bearing clearances.

STANDARD PROCEDURE - ENGINE CORE AND OIL GALLERY PLUGS

Using a blunt tool such as a drift and a hammer, strike the bottom edge of the cup plug. With the cup plug rotated, grasp firmly with pliers or other suitable tool and remove plug (Fig. 5).

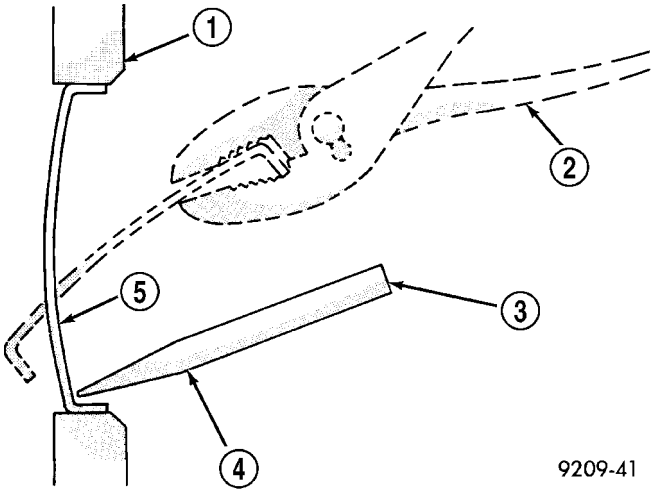

Fig. 5 Core Hole Plug Removal

1 - CYLINDER BLOCK
2 - REMOVE PLUG WITH PLIERS
3 - STRIKE HERE WITH HAMMER
4 - DRIFT PUNCH
5 - CUP PLUG

CAUTION: Do not drive cup plug into the casting as restricted cooling can result and cause serious engine problems.

Thoroughly clean inside of cup plug hole in cylinder block or head. Be sure to remove old sealer. Lightly coat inside of cup plug hole with Mopar® Stud and Bearing Mount. Make certain the new plug is cleaned of all oil or grease. Using proper drive plug, drive plug into hole so that the sharp edge of the plug is at least 0.5 mm (0.020 in.) inside the lead-in chamfer.

It is not necessary to wait for curing of the sealant. The cooling system can be refilled and the vehicle placed in service immediately.

REMOVAL - ENGINE ASSEMBLY

(1) Perform fuel pressure release procedure (Refer to 14 - FUEL SYSTEM/FUEL DELIVERY - STANDARD PROCEDURE).

(2) Remove throttle body air inlet hose and air cleaner housing assembly.

(3) Disconnect negative battery cable.

(4) Disconnect positive battery cable. Remove battery and battery tray (Fig. 6) and (Fig. 7).

(5) Drain cooling system (Refer to 7 - COOLING/ENGINE - STANDARD PROCEDURE).

ENGINE 1.6L SOHC (Continued)

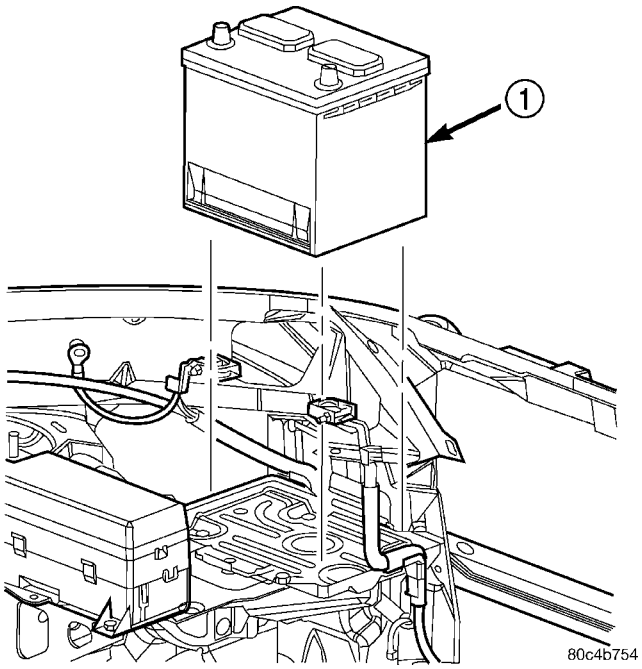

Fig. 6 Battery—Removal/Installation

1 - BATTERY

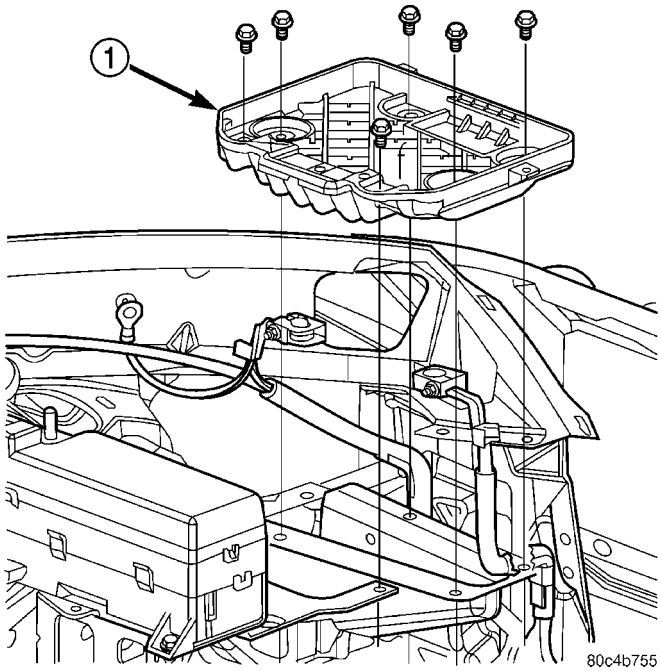

Fig. 7 Battery Tray—Removal/Installation

1 - BATTERY TRAY

(6) Discharge air conditioning system, if equipped (Refer to 24 - HEATING & AIR CONDITIONING - STANDARD PROCEDURE).

(7) Disconnect engine wiring harness at Powertrain Control Module (PCM).

(8) Disconnect positive cable from Power Distribution Center (PDC) and ground wire from vehicle body. Remove bolts attaching PDC and set aside (Fig. 8).

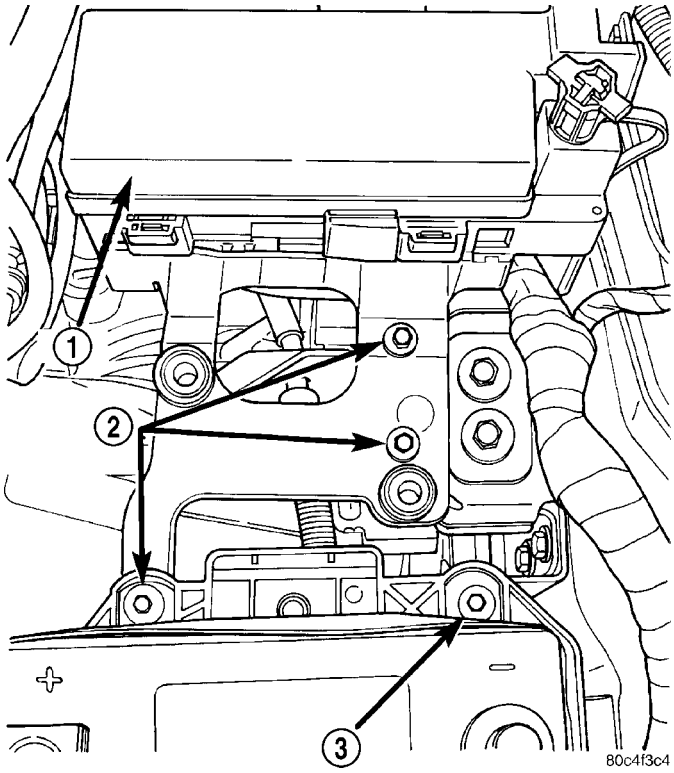

Fig. 8 PDC Bracket Attaching Bolts

1 - PDC
2 - PDC BRACKET BOLTS
3 - BATTERY TRAY BOLT

(9) Disconnect coolant recovery container hose from radiator neck.

(10) Disconnect heater hoses at thermostat housing and heater return tube.

(11) Disconnect wiring connectors at lower battery tray support.

(12) Remove upper radiator support crossmember (Refer to 23 - BODY/EXTERIOR/RADIATOR CROSSMEMBER - REMOVAL).

(13) Remove upper radiator hose.

(14) Remove lower radiator hose.

(15) Disconnect upper A/C line from A/C condenser.

(16) Disconnect A/C lines at junction near upper torque strut.

(17) Disconnect radiator fan electrical connector and remove cooling module assembly (fan, radiator, A/C condenser).

(18) Disconnect transmission shift cables and transmission electrical connectors.

(19) Disconnect brake booster and purge solenoid vacuum hoses.

(20) Disconnect ground strap at cylinder head.

(21) Remove fasteners holding power steering return line to right engine bracket. Remove fasteners holding power steering reservoir to right engine

ENGINE 1.6L SOHC (Continued)

bracket. Disconnect reservoir hose from power steering pump. Reposition reservoir out of way.

(22) Raise vehicle on hoist.

(23) Drain engine oil.

(24) Remove both front wheels.

(25) Remove accessory drive belt splash shield.

(26) Remove accessory drive belt (Refer to 7 - COOLING/ACCESSORY DRIVE/DRIVE BELT - REMOVAL).

(27) Remove pencil strut and lower torque strut (Fig. 9).

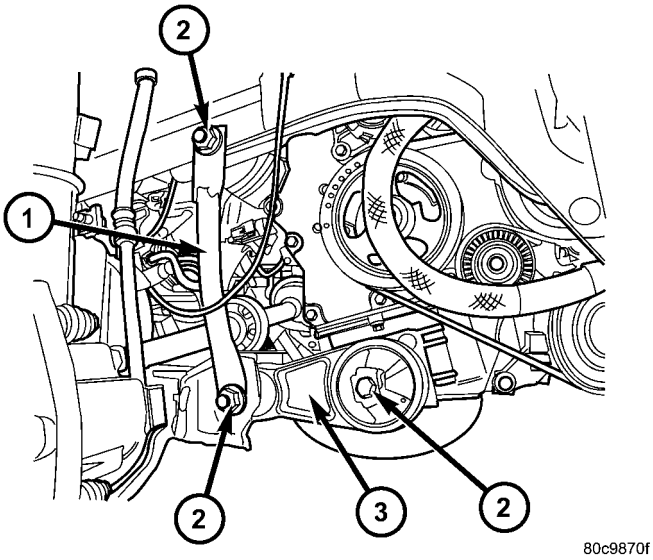

Fig. 9 Lower Torque Strut

1 - PENCIL STRUT
2 - TORQUE STRUT FASTENERS
3 - LOWER TORQUE STRUT

(28) Remove left and right drive axles (Refer to 3 - DIFFERENTIAL & DRIVELINE/HALF SHAFT - REMOVAL).

(29) Remove fasteners securing exhaust pipe to exhaust manifold.

(30) Remove clutch slave cylinder and damper fasteners (Fig. 10). Reposition and support with suitable strap.

(31) Disconnect power steering pressure line from power steering pump.

(32) Disconnect A/C compressor electrical connectors.

(33) Remove A/C compressor mounting bolts. Remove A/C compressor.

(34) Lower vehicle.

(35) Disconnect fuel line from fuel rail.

(36) Raise vehicle enough to allow engine dolly, cradle, and posts, (Special Tools 6135, 6710, and 6848) to be installed under vehicle. For Special Tool identification (Refer to 9 - ENGINE - SPECIAL TOOLS).

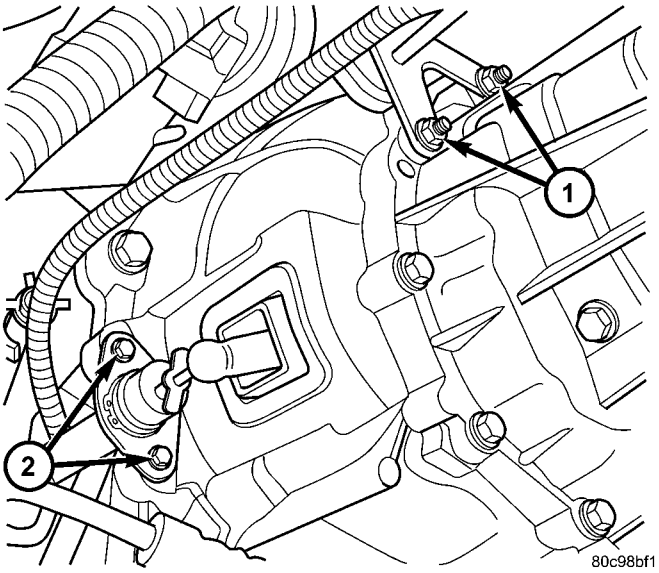

Fig. 10 Clutch Slave Cylinder/Damper

1 - DAMPER FASTENERS
2 - CLUTCH SLAVE CYLINDER FASTENERS

(37) Loosen engine support posts to allow movement for positioning onto engine locating holes (Fig. 13). Position wooden blocks under oil pan (Fig. 13). Lower vehicle and position cradle until the engine is resting on support posts and wooden blocks (Fig. 13). Tighten post mounts to cradle frame. This will keep support posts from moving when removing or installing engine and transmission.

(38) Install safety straps around the engine to cradle (Fig. 13). Tighten straps and lock them into position.

WARNING: Safety straps MUST be used to secure engine to the dolly fixture.

(39) Raise vehicle enough to see if straps are tight enough to hold cradle assembly to engine.

(40) Lower vehicle so weight of the engine and transmission ONLY is on the cradle assembly.

(41) Remove upper torque strut (Fig. 11).

(42) Remove right mount through bolt (Fig. 11) and left mount attaching bolts (Fig. 12).

(43) Continue raising vehicle slowly until engine/transaxle assembly clears engine compartment. It may be necessary to move the engine/transmission assembly with the cradle to allow for removal around body flanges.

INSTALLATION - ENGINE ASSEMBLY

(1) Position engine and transmission assembly under vehicle and slowly lower the vehicle over the engine/transaxle assembly.

(2) Continue lowering vehicle until engine/transaxle aligns to mounting locations. Install mounting

ENGINE 1.6L SOHC (Continued)

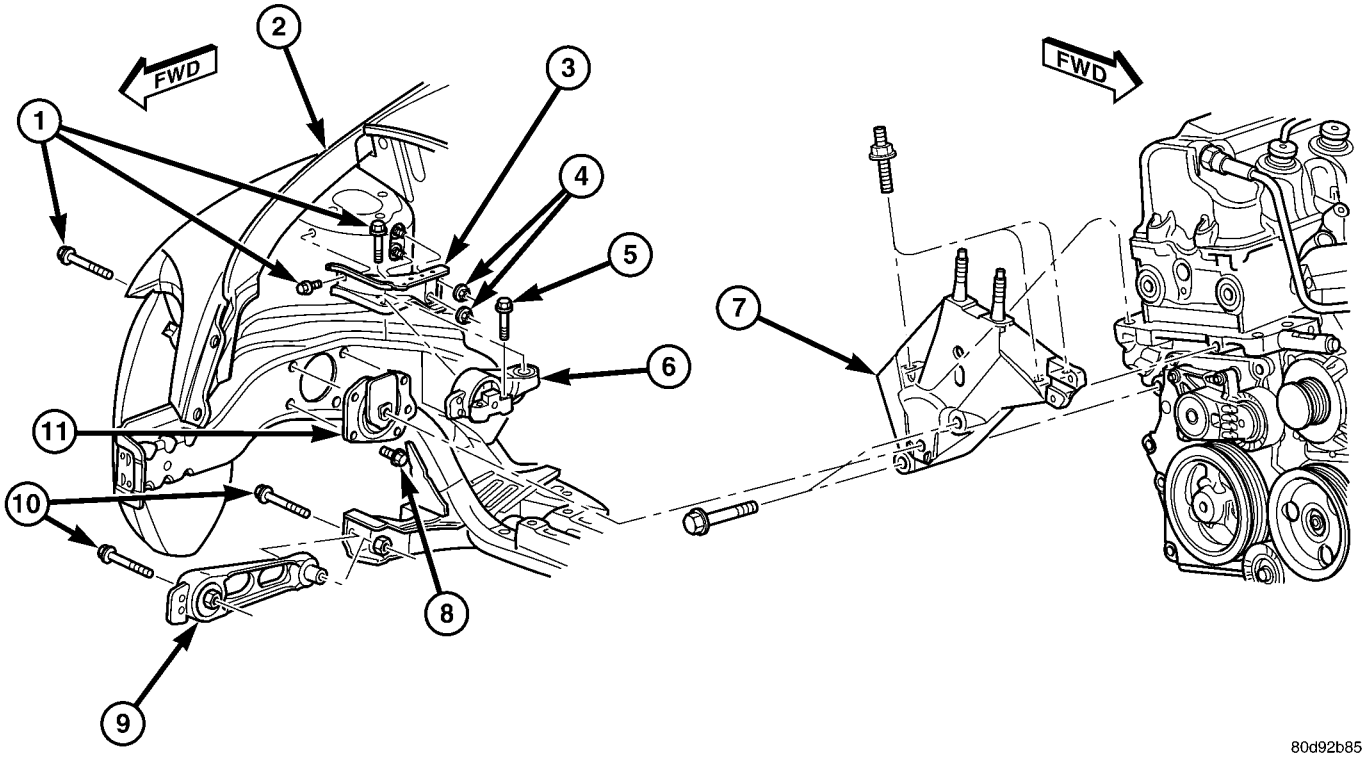

Fig. 11 Engine Mounting - Right Side

1 - BOLTS
2 - RIGHT FENDER
3 - UPPER TORQUE STRUT BRACKET
4 - NUTS
5 - BOLT
6 - UPPER TORQUE STRUT
7 - ENGINE MOUNT BRACKET
8 - BOLT
9 - LOWER TORQUE STRUT
10 - BOLT
11 - RIGHT ENGINE MOUNT

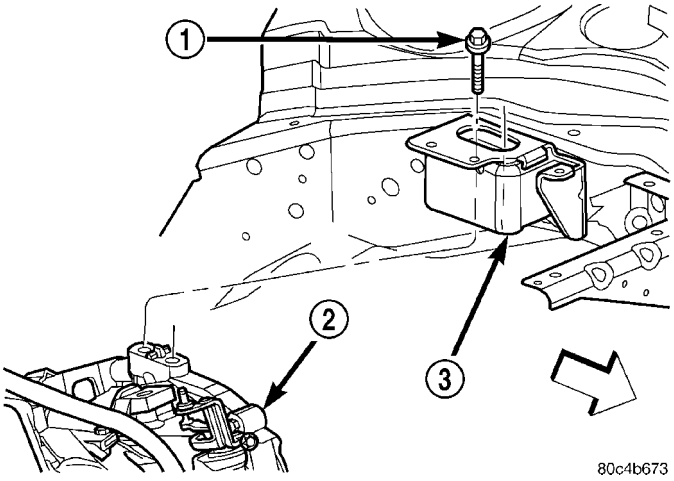

Fig. 12 Left Mount Bolts

1 - BOLT
2 - TRANSAXLE
3 - LEFT MOUNT

bolts at the right and left engine/transaxle mounts (Fig. 11) and (Fig. 12). Tighten bolts to 118 N·m (87 ft. lbs.).

(3) Install the upper engine torque strut (Fig. 11).

(4) Remove safety straps from engine/transaxle assembly. Slowly raise vehicle enough to remove the engine dolly and cradle.

(5) Raise vehicle.

(6) Install A/C compressor mounting bolts. Reconnect A/C compressor electrical connectors.

(7) Connect power steering pressure line to power steering pump.

(8) Install fasteners securing clutch slave cylinder and damper (Fig. 10).

(9) Connect exhaust pipe to exhaust manifold. Install fasteners and torque to 28 N·m (250 in. lbs.).

(10) Install left and right drive axles (Refer to 3 - DIFFERENTIAL & DRIVELINE/HALF SHAFT - INSTALLATION).

(11) Install pencil strut and lower torque strut (Fig. 9).

(12) Install accessory drive belt (Refer to 7 - COOLING/ACCESSORY DRIVE/DRIVE BELT - INSTALLATION).

(13) Install accessory drive belt splash shield.

(14) Install both front wheels.

(15) Lower vehicle.

(16) Connect fuel line to fuel rail.

ENGINE 1.6L SOHC (Continued)

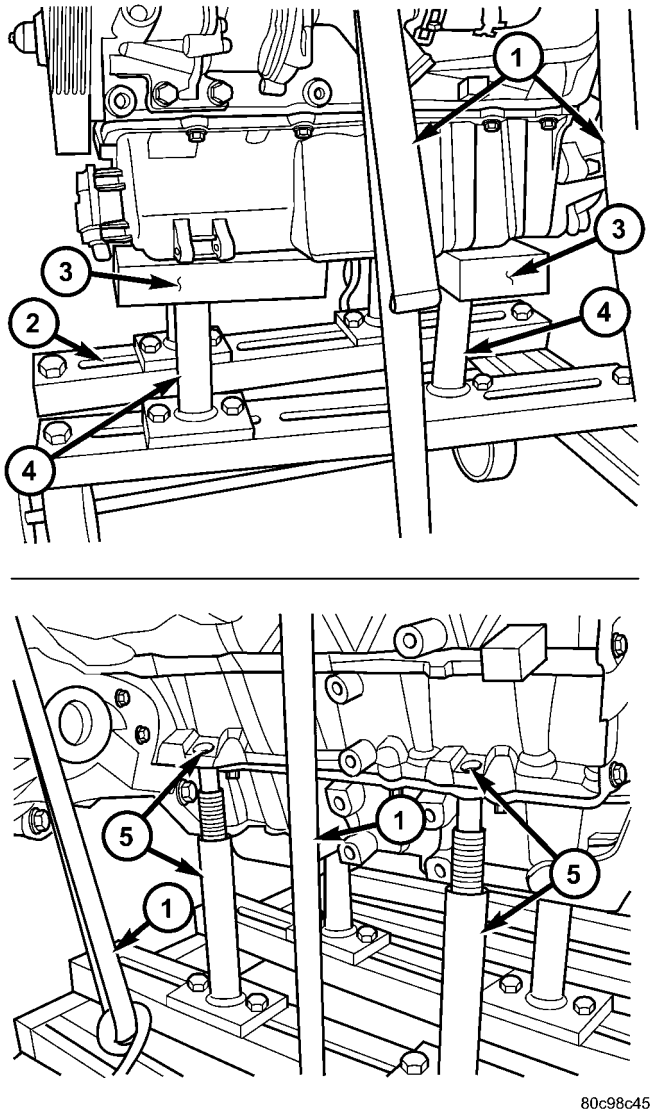

Fig. 13 Positioning Engine - Removal/Installation

1 - SAFETY STRAPS
2 - SPECIAL TOOL 6710
3 - WOODEN BLOCK
4 - SPECIAL TOOL 6848
5 - PLACE REAR POSTS INTO LOCATING HOLES

(17) Connect power steering reservoir hose to power steering pump. Install fastener securing power steering return line to right engine bracket. Install fasteners securing power steering reservoir bracket to right engine bracket.

(18) Connect ground strap to cylinder head.

(19) Connect brake booster and purge solenoid vacuum hoses.

(20) Connect transmission shift cables and transmission electrical connectors.

(21) Install cooling module assembly (fan, radiator, A/C condenser). Connect radiator fan electrical connector.

(22) Connect A/C lines at junction near upper torque strut.

(23) Connect upper A/C line to A/C condenser.

(24) Connect upper and lower radiator hoses.

(25) Install upper radiator crossmember (Refer to 23 - BODY/EXTERIOR/RADIATOR CROSSMEMBER - INSTALLATION).

(26) Connect heater hoses to thermostat housing and heater return tube.

(27) Connect coolant recovery container hose to radiator neck.

(28) Install bolts attaching Power Distribution Center (PDC). Connect positive cable to PDC and ground wire to vehicle body (Fig. 8).

(29) Connect engine wiring harness at Powertrain Control Module (PCM).

(30) Install battery tray and battery (Fig. 6) and (Fig. 7). Connect positive battery cable.

(31) Connect negative battery cable.

(32) Install air cleaner housing and throttle body air inlet hose.

(33) Install new oil filter. Fill engine crankcase with proper oil to correct level.

(34) Fill power steering system.

(35) Fill Cooling system (Refer to 7 - COOLING/ ENGINE - STANDARD PROCEDURE).

(36) Evacuate and recharge A/C system (Refer to 24 - HEATING & AIR CONDITIONING - STANDARD PROCEDURE).

(37) Start engine and run until operating temperature is reached.

(38) Perform torque strut adjustment procedure (Refer to 9 - ENGINE/ENGINE MOUNTING/ TORQUE STRUT - ADJUSTMENTS).

(39) Adjust transmission linkage, if necessary.

SPECIFICATIONS

1.6L SOHC ENGINE

DESCRIPTION	SPECIFICATION
General Specification	
Type	In-Line OHV, SOHC
Number of Cylinders	4
Displacement	1.6 Liters (97.6 cu. in.)
Bore	77.0 mm (3.03 in.)
Stroke	85.8 mm (3.377 in.)
Compression Ratio	10.5:1

ENGINE 1.6L SOHC (Continued)

DESCRIPTION	SPECIFICATION
Firing Order	1-3-4-2
Compression Pressure	1172–1551 kPa (170–225 psi)
Max. Variation Between Cylinders	25%
Engine Block	
Cylinder Bore Diameter	76.9924–77.0076 mm (3.031–3.0317 in.)
Out-of-Round (Max.)	.0076 mm (0.0002 in.)
Taper (Max.)	0.051 mm (0.002 in.)
Pistons	
Piston Diameter	76.956–76.974 mm (3.029–3.030 in.)
Clearance @ 40.25 mm (1.58 in.) from top of piston	0.018–0.52 mm (0.0008–0.0020 in.)
Weight	219–224 grams (7.5–8.8 oz.)
Land Clearance (Diametrical)	0.758–0.790 mm (0.0299–0.0312 in.)
Piston Length	46.25 mm (1.82 in.)
Piston Pin Hole Diameter	19.008–19.015 mm (.748–.750 in.)
Piston Ring Groove Width - Top Compression Ring	1.215–1.235 mm (0.0478–0.0486 in.)
Piston Ring Groove Width - 2nd Compression Ring	1.215–1.235 mm (0.0478–0.0486 in.)
Piston Ring Groove Width - Oil Ring	2.521–2.541 mm (0.0993–0.1000 in.)
Piston Pins	
Clearance in Piston	0.008–0.015 mm (0.0003–0.0006 in.)
Clearance in Connecting Rod	Interference
Diameter	18.995–19.000 mm (0.7478–0.7480 in.)
End Play	None

DESCRIPTION	SPECIFICATION
Length	56.50–57.00 mm (2.224–2.2244 in.)
Piston Rings	
Ring Gap—Top Compression Ring	0.20–0.36 mm (0.007–0.014 in.)
Wear Limit	0.8 mm (0.031 in.)
Ring Gap—2nd Compression Ring	0.25–0.46 mm (0.009–0.018 in.)
Wear Limit	1.0 mm (0.039 in.)
Ring Gap—Oil Control Steel Rails	0.20–0.58 mm (0.0078–0.0228 in.)
Wear Limit	1.0 mm (0.039 in.)
Ring Side Clearance—Compression Rings	0.025–0.065 mm (0.0010–0.0026 in.)
Wear Limit	0.10 mm (0.004 in.)
Ring Side Clearance—Oil Ring Pack	0.004–0.178 mm (0.0002–0.0070 in.)
Ring Width—Compression Rings	1.17–1.19 mm (0.046–0.047 in.)
Ring Width—Oil Ring Pack	2.354–2.517 mm (0.093–0.099 in.)
Connecting Rod	
Bearing Clearance	0.023–0.067 mm (0.0009–0.0026 in.)
Wear Limit	0.075 mm (0.003 in.)
Bore Diameter—Piston Pin End	18.96 - 18.98 mm (0.746 - 0.747 in.)
Bore Diameter—Crankshaft End	47.005 - 46.991 mm (1.8505 - 1.8500 in.)
Connecting Rod — Length	135.6 mm (5.34 in.)
Connecting Rod — Weight (less bearing)	241.32 grams (8.51 oz.)
Side Clearance	0.13–0.38 mm (0.005–0.015 in.)
Wear Limit	0.40 mm (0.016 in.)

ENGINE 1.6L SOHC (Continued)

DESCRIPTION	SPECIFICATION
Crankshaft	
Connecting Rod Journal Diameter	43.992–44.008 mm (1.731–1.732 in.)
Main Bearing Journal Diameter	47.922–48.008 mm (1.731–1.890 in.)
Journal Out-of-Round (Max.)	0.006 mm (0.0002 in.)
Journal Taper (Max.)	0.008 mm (0.0003 in.)
End Play	0.09–0.24 mm (0.0035–0.0094 in.)
Wear Limit	0.37 mm (0.015 in.)
Main Bearing Clearance	0.022–0.062 mm (0.0008–0.0024 in.)
Connecting Rod Bearing Clearance	0.023–0.067 mm (0.0009–0.0026 in.)
Rocker Arm Shaft	
Rocker Arm Shaft Diameter	18.966–18.984 mm (0.7466–0.7474 in.)
Rocker Arm/Hydraulic Lash Adjuster	
Rocker Arm Inside Diameter	19.00–19.02 mm (0.7480–0.7488 in.)
Rocker Arm Shaft Clearance	0.016–0.054 mm (0.0006–0.0021 in.)
Lash Adjuster Body Diameter	11.978–11.966 mm (0.4716–0.4711 in.)
Plunger Travel Minimum (Dry)	2.2 mm (0.087 in.)
Dry Lash—Intake	1.50 mm (0.059 in.)
Dry Lash—Exhaust	1.46 mm (0.057 in.)
Rocker Arm Ratio (Camshaft at Base Circle)	
Intake	1.8 to 1
Exhaust	1.5 to 1
Cylinder Head Camshaft Bearing Bore Diameter	
Bearing Bore Diameter	25.359–25.380 mm (0.9984–0.9992 in.)

DESCRIPTION	SPECIFICATION
Camshaft	
Journal Diameter	25.290–25.309 mm (0.9957–0.9964 in.)
Bearing Clearance—Diametrical	0.050–0.090 mm (0.0027–0.003 in.)
Bearing Clearance (Max. allowable)	0.12 mm (0.0047 in.)
End Play	0.05–0.39 mm (0.002–0.015 in.)
Lift (Zero Lash)	
Intake	8.55 mm (0.337 in.)
Exhaust	8.00 mm (0.314 in.)
Exhaust Valve Timing*	
Closes (BTDC)	-0.5°
Opens (BBDC)	37.7°
Duration	218.2°
Intake Valve Timing*	
Closes (ABDC)	37.7°
Opens (BTDC)	-4.4°
Duration	213.3°
Valve Overlap	-3.9°
*All readings in crankshaft degrees, at 0.5 mm (0.019 in.) of valve lift.	
Cylinder Head	
Material	Cast Aluminum
Gasket Thickness (Compressed)	0.60 - 0.70 mm (0.023 - 0.0275 in.)
Valve Seat	
Angle	45°
Seat Diameter—Intake	31.975 -31.950 mm (1.258 - 1.257 in.)
Seat Diameter—Exhaust	25.20 - 25.175 mm (0.992 - 0.991
Runout (Max.)	0.05 mm (0.002 in.)
Valve Seat Width—Intake and Exhaust	0.90 - 1.30 mm (0.035 - 0.051 in.)
Service Limit	1.50 mm (0.059 in.)

ENGINE 1.6L SOHC (Continued)

DESCRIPTION	SPECIFICATION
Valve Guide	
Inside Diameter	5.975–6.000 mm (0.235–0.236 in.)
Guide Height (spring seat to guide tip)	13.25–13.75 mm (0.521–0.541 in.)
Valves	
Face Angle Intake and Exhaust	45–45.5°
Head Diameter—Intake	30.10–30.36 mm (1.185–1.195 in.)
Head Diameter—Exhaust	23.13–23.39 mm (0,910–0.920 in.)
Valve Margin	
Intake	1.16–1.50 mm (0.0457–0.0591 in.)
Service Limit	0.95 mm (1/32 in.)
Exhaust	1.61–1.95 mm (0.063–0.077 in.)
Service Limit	1.05 mm (3/64 in.)
Valve Length (Overall)	
Intake	109.28–109.78 mm (4.302–4.322 in.)
Exhaust	118.08–118.58 mm (4.649–4.669 in.)
Valve Stem Tip Height	
Intake	49.16 mm (1.935 in.)
Exhaust	49.19 mm (1.937 in.)
Valve Stem Diameter	
Intake	5.934–5.952 mm (0.2337–0.2344 in.)
Exhaust	5.906–5.924 mm (0.2326–0.2333 in.)

DESCRIPTION	SPECIFICATION
Valve Stem to Guide Clearance	
Intake	0.023–0.066 mm (0.0009–0.0026 in.)
Max. Allowable	0.076 mm (0.003 in.)
Service Limit	0.25 mm (0.010 in.)
Exhaust	0.051–0.094 mm (0.002–0.0037 in.)
Max. Allowable	0.101 mm (0.004 in.)
Service Limit	0.25 mm (0.010 in.)
Valve Springs	
Free Length (Approx.)	51.3 mm (2.02 in.)
Nominal Force (Valve Closed)	286 - 319 N @ 43.0 mm (64.3 - 71.71 lbs. @ 1.6 in.)
Nominal Force (Valve Open)	759 - 833 N @ 34.25 mm (170.63 - 187.27 lbs. @ 1.28 in.)
Installed Height	43.0 mm (1.69 in.)
Oil Pump	
Relief Valve Opening Pressure	413.69 kPa (60 psi)
Oil Pressure	
(NOTE: At Normal Operating Temperatures)	
Pressure @ Curb Idle Speed*	25 kPa (4 psi)
Pressure @ 3000 RPM	170–550 kPa (25–80 psi)
*If pressure is ZERO at idle, DO NOT run engine at 3000 RPM.	

ENGINE 1.6L SOHC (Continued)

TORQUE

DESCRIPTION	N·m	Ft. Lbs.	In. Lbs.
Camshaft Position Sensor	10	—	85
Crankshaft Position Sensor	10	—	85
Camshaft Sprocket—Bolt	115	85	—
Rocker Shaft/Camshaft Bearing Cap	25	—	225
Timing Chain Cover	12	—	105
Timing Chain Guide	28	—	250
Timing Chain Tensioner Plug	62	46	—
Connecting Rod Cap—Bolts	26 +¼ turn	19 +¼ turn	—
Crankshaft Main Bearing Cap/Bedplate			
Bedplate Bolts	30	22	—
Main Bearing Cap Bolts	61	45	—
Crankshaft Damper—Bolt	115	85	—
Cylinder Head—Bolts	(Refer to 9 - ENGINE/CYLINDER HEAD - INSTALLATION)		
Cylinder Head Cover	12	—	105
Right Engine Mount Bracket			
M12—Fasteners	118	87	—
M10—Fasteners	68	50	—
Exhaust Manifold Heat Shield	28	—	250
Exhaust Manifold to Cylinder Head Bolts	23	—	200
Intake Manifold - Upper	12	—	105
Intake Manifold - Lower	26	—	230
Intake Manifold Support Bracket			
M6—Fasteners	19	—	165
M8—Fasteners	28	—	250
Oil Filter Cartridge Cap	25	18	—
Oil Filter Cartridge Housing	28	—	250
Oil Pan Bolts	31	—	275
Oil Pan Drain Plug	27	20	—
Oil Pump Pick-up Tube Bolt	12	—	105

SPECIAL TOOLS

1.6L SOHC ENGINE

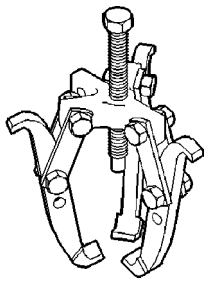

Puller 1026

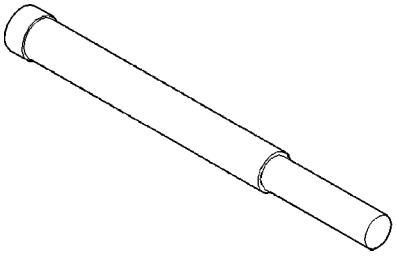

Crankshaft Damper Removal Insert 6827A

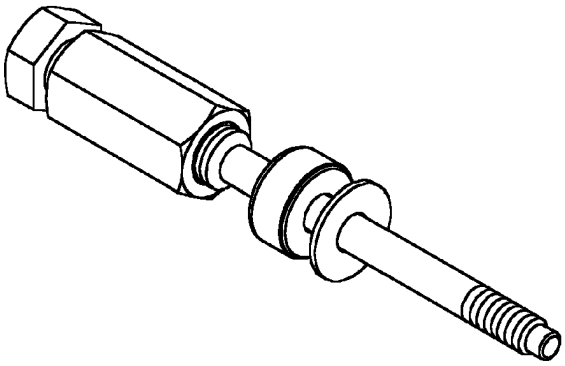

Crankshaft Damper/Sprocket Installer 8385

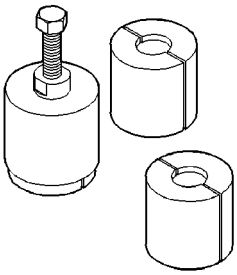

Puller 5048

ENGINE 1.6L SOHC (Continued)

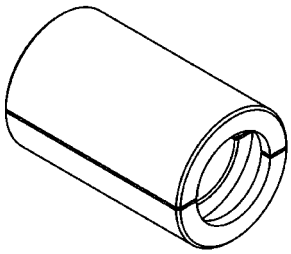

Puller Adaptor 8539

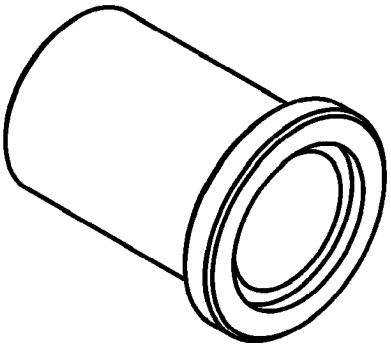

Crankshaft Sprocket Installer 8386

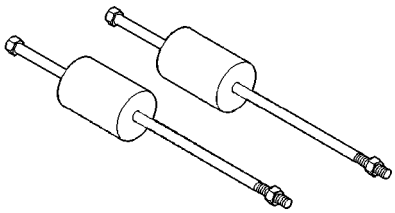

Puller, Slide Hammer C-3752

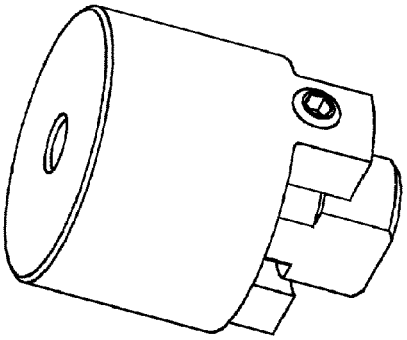

Spark Plug Tube Remover 8819

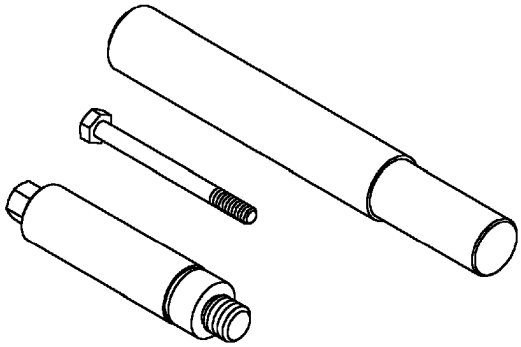

Spark Plug Tube Installer 8447

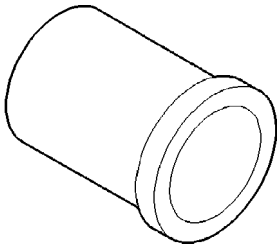

Spark Plug Tube Seal Installer MD-998306

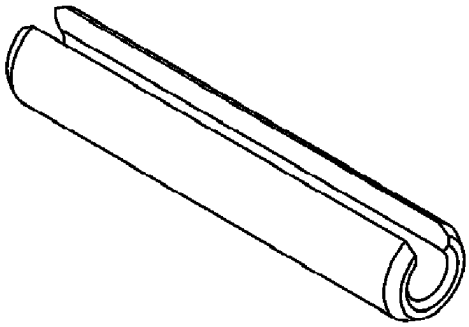

Protective Sleeve 8448

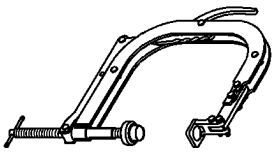

Valve Spring Compressor C-3422-D

ENGINE 1.6L SOHC (Continued)

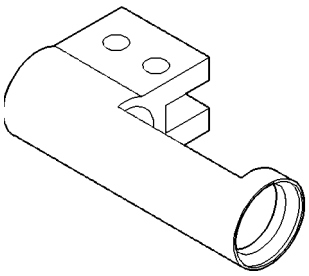

Spring Compressor Adapter 6526A

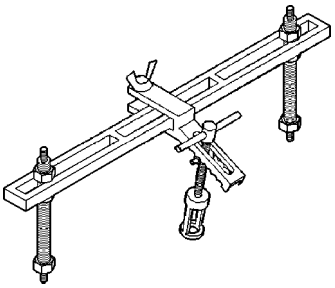

Valve Spring Compressor MD998772A

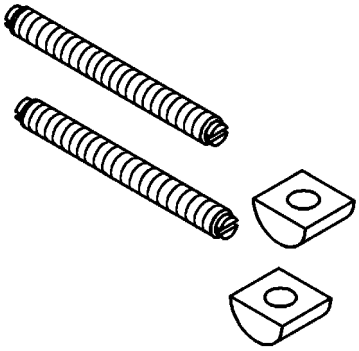

Adapter Studs/Spacers 8813

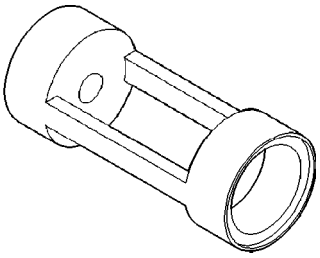

Spring Compressor Adapter 6779

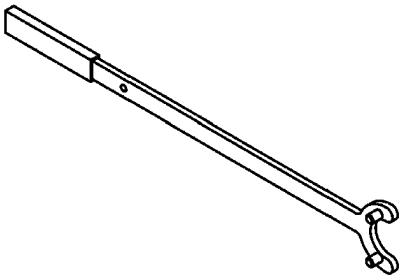

Camshaft Sprocket Holding Wrench 8435

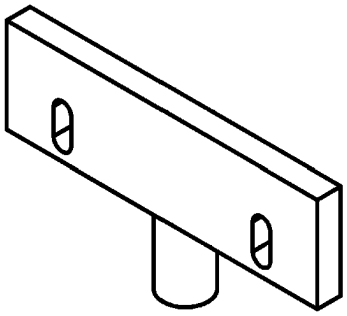

Camshaft Sprocket Holder 8446

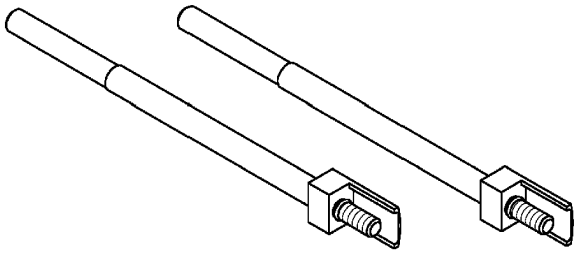

Connecting Rod Installation Guides 8388

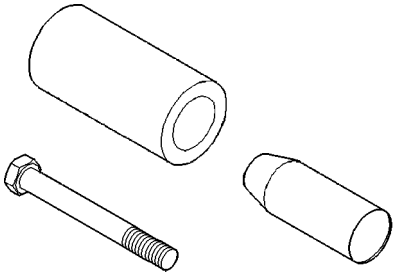

Front Crankshaft Seal Installer 6780

ENGINE 1.6L SOHC (Continued)

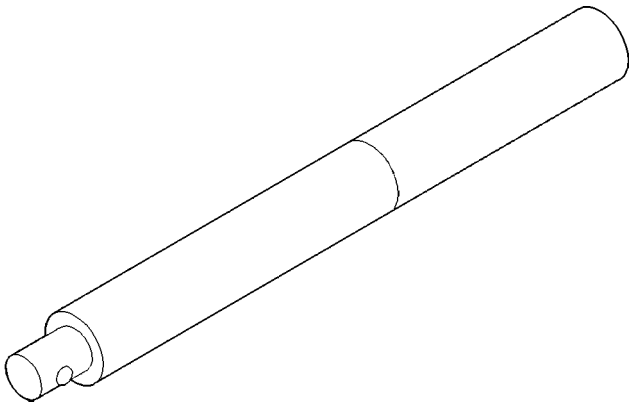

Driver Handle C-4171

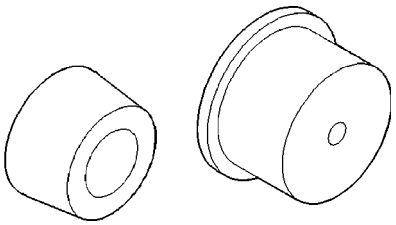

Rear Crankshaft Seal Guide and Installer 6926-1 and 6926-2

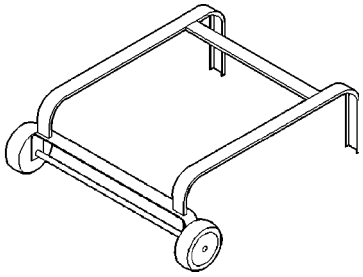

Dolly 6135

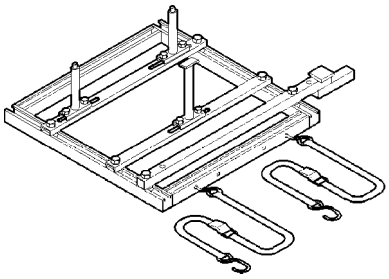

Cradle 6710A

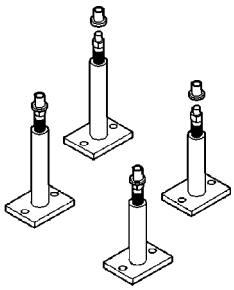

Post Kit Engine Cradle 6848

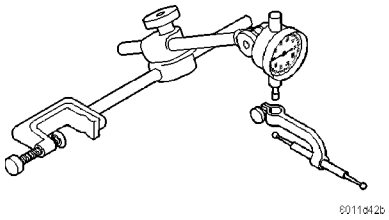

Dial Indicator C-3339

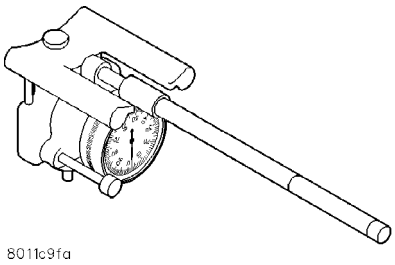

Cylinder Bore Indicator C-119

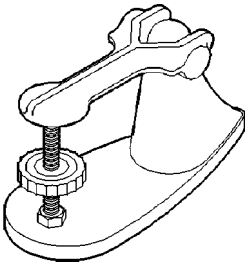

Valve Spring Tester C-647

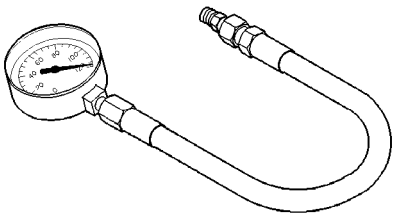

Pressure Gauge C-3292

ENGINE 1.6L SOHC (Continued)

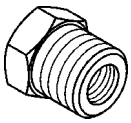

Adapter 8406

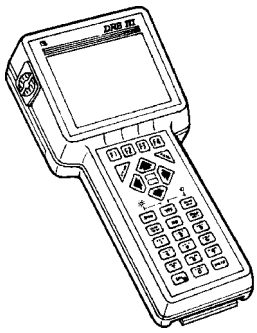

DRB III® with PEP Module – OT-CH6010A

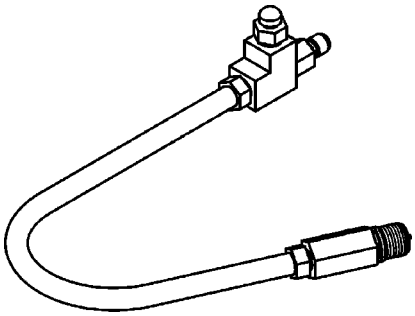

Cylinder Compression Pressure Adaptor 8116

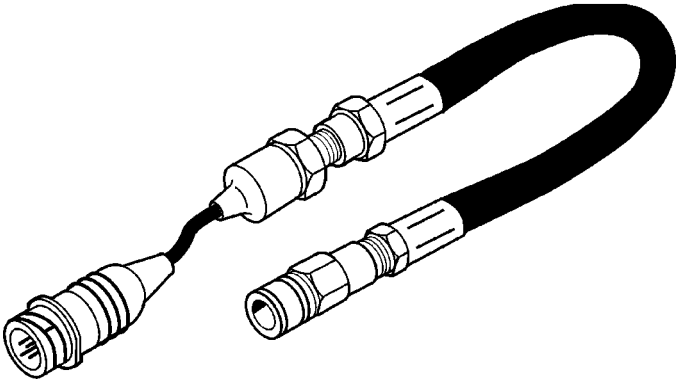

Pressure Transducer CH7059

AIR CLEANER ELEMENT

REMOVAL

(1) Unsnap the 2 clips holding the air cleaner housing cover.

(2) Lift the air cleaner housing cover up.

(3) Remove the air cleaner element (Fig. 14).

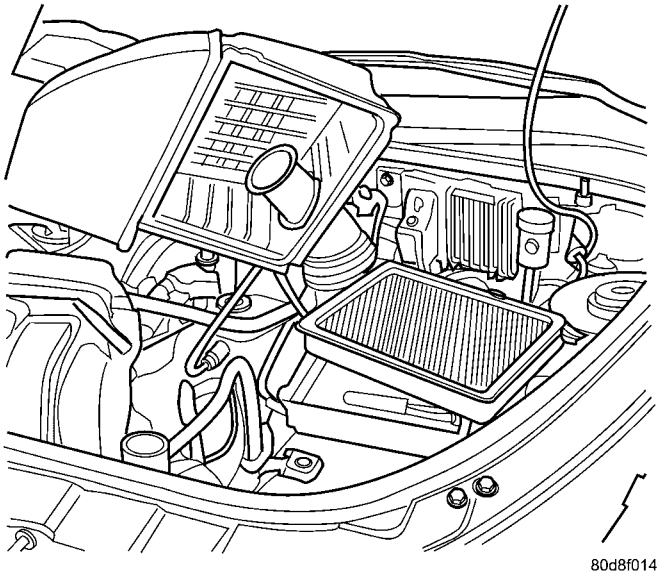

Fig. 14 Air Cleaner Housing Cover

INSTALLATION

(1) Install air cleaner element into the air cleaner housing (Fig. 14).

(2) Reposition the air cleaner housing cover.

(3) Latch the 2 spring clips.

AIR CLEANER HOUSING

REMOVAL

(1) Disconnect the inlet air temperature sensor.

(2) Remove the inlet tube to throttle body.

(3) Unsnap the 2 clips holding the air cleaner housing cover.

(4) Lift the air cleaner housing cover up.

(5) Remove the air cleaner element (Fig. 14).

(6) Pull air cleaner housing straight up and off of the 2 locating pins (Fig. 15).

AIR CLEANER HOUSING (Continued)

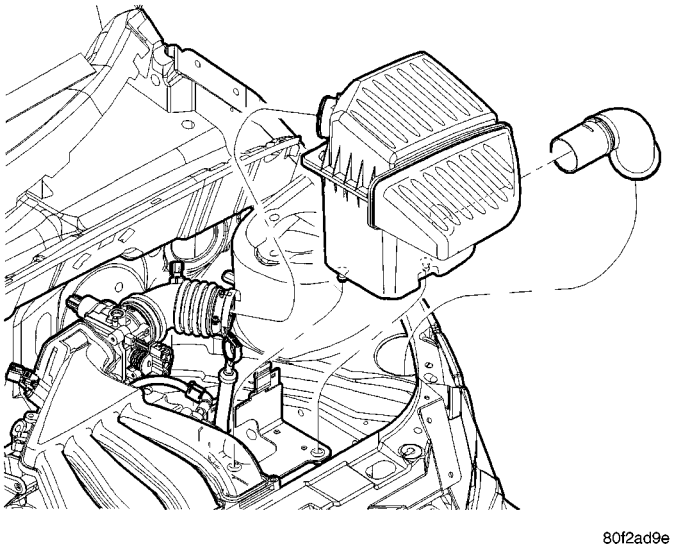

Fig. 15 AIR CLEANER HOUSING

INSTALLATION

(1) Install air cleaner housing onto the locating pins.
(2) Install the air cleaner element.
(3) Install the inlet tube onto the throttle body.
(4) Install cover to the air cleaner housing.
(5) Latch the 2 spring clips.
(6) Connect the electrical connector to the inlet air temperature sensor.

CYLINDER HEAD

REMOVAL - CYLINDER HEAD

(1) Perform fuel system pressure release procedure (Refer to 14 - FUEL SYSTEM/FUEL DELIVERY - STANDARD PROCEDURE).
(2) Disconnect negative battery cable.
(3) Drain cooling system (Refer to 7 - COOLING/ ENGINE - STANDARD PROCEDURE).
(4) Disconnect throttle body air inlet hose.
(5) Disconnect ground strap from cylinder head.
(6) Disconnect vacuum hoses from throttle body.
(7) Disconnect the following electrical components:
- Upstream Oxygen Sensor
- Camshaft Position Sensor
- Ignition Coil and Capacitor
- Fuel Injectors
- MAP Sensor
- Knock Sensor
- Electronic Throttle Control Motor
- ECT Sensor
- Generator

(8) Disconnect heater hoses from thermostat housing and heater return tube.
(9) Remove fastener securing heater return tube to thermostat housing.
(10) Disconnect upper radiator hose.
(11) Raise vehicle on hoist.
(12) Remove right front wheel.
(13) Remove accessory drive belt splash shield.
(14) Remove lower torque strut.
(15) Remove lower bolt for right engine mount bracket.
(16) Remove fasteners securing exhaust pipe to exhaust manifold.
(17) Lower vehicle.
(18) Remove upper torque strut.
(19) Remove fastener securing power steering return line to right engine mount bracket.
(20) Remove fasteners securing power steering reservoir to right engine mount bracket.
(21) Support engine with floor jack and wooden block on oil pan.
(22) Remove right engine mount through bolt.
(23) Jack up engine. Remove remaining fasteners holding right engine mount bracket. Remove right engine mount bracket.
(24) Remove camshaft position sensor.
(25) Remove cylinder head cover (Refer to 9 - ENGINE/CYLINDER HEAD/CYLINDER HEAD COVER(S) - REMOVAL).
(26) Rotate crankshaft until triangular timing mark on camshaft sprocket is at the 12 o'clock position.
(27) For reassembly purposes, paint the timing chain link that lines up with camshaft timing mark (Fig. 16).

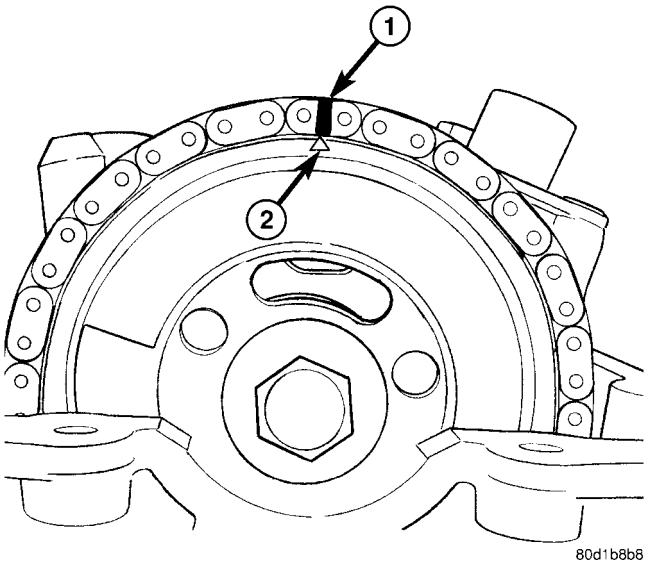

Fig. 16 Identify Timing Chain Link for Reassembly Purposes

1 - PAINT THE LINK THAT ALIGNS WITH TIMING MARK
2 - CAMSHAFT SPROCKET TIMING MARK

CYLINDER HEAD (Continued)

(28) Using Special Tool 8435 to hold camshaft sprocket, remove camshaft sprocket bolt (Fig. 17).

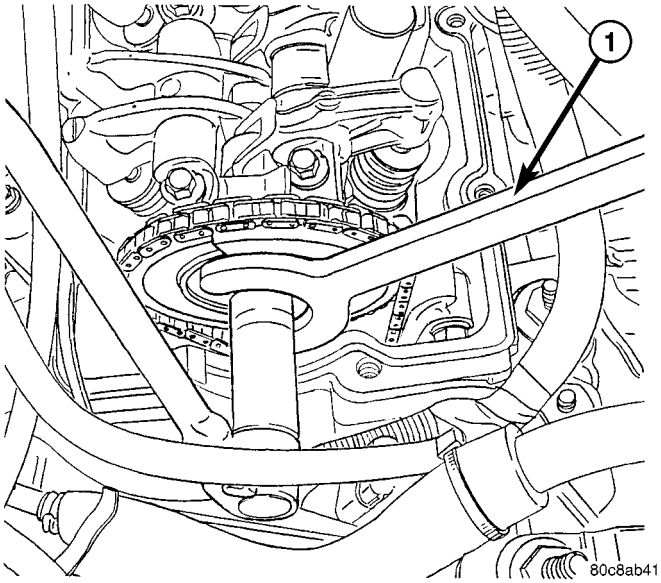

Fig. 17 Special Tool 8435 - Camshaft Sprocket Holding Wrench

1 - SPECIAL TOOL 8435

(29) Remove the timing chain tensioner plug from engine block. Remove oil reservoir cap and timing chain tensioner (Fig. 18).

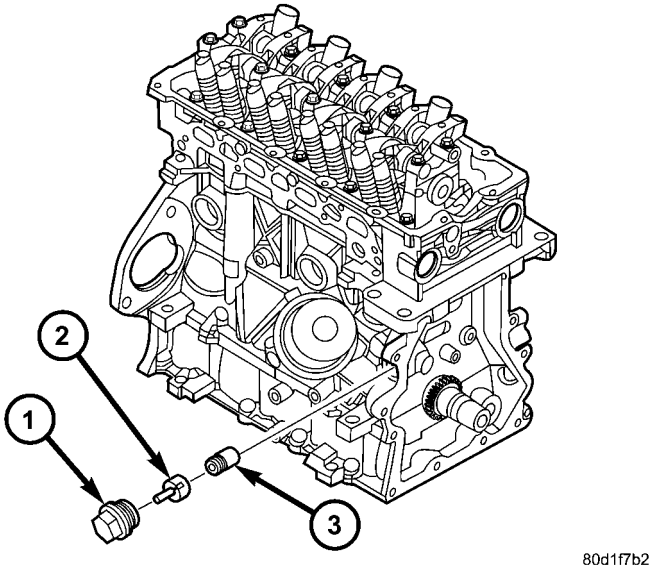

Fig. 18 Timing Chain Tensioner

1 - PLUG WITH SEAL RING
2 - OIL RESERVOIR CAP
3 - TIMING CHAIN TENSIONER

NOTE: The design of the timing chain cover will allow the timing chain to stay on the crankshaft sprocket without skipping any teeth. Do not rotate engine.

(30) Remove camshaft sprocket from camshaft. Partially lower camshaft sprocket to allow timing chain to be removed from camshaft sprocket. Allow timing chain to fall into crankcase.

(31) Remove cylinder head plugs. Remove fasteners holding timing chain guides to cylinder head. Remove timing chain guides (Fig. 19).

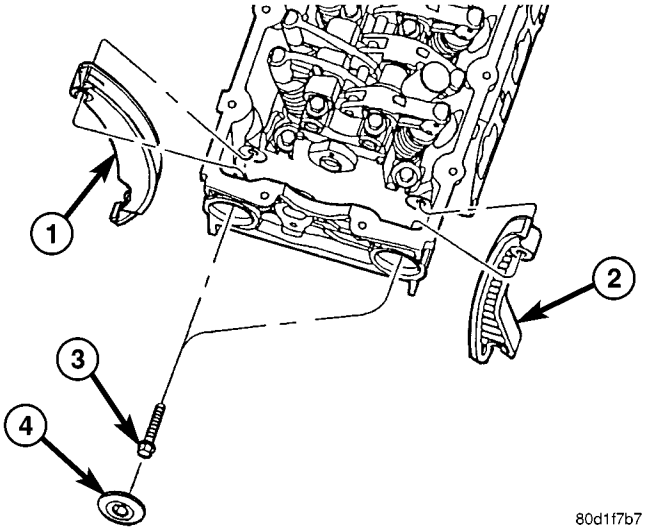

Fig. 19 Timing Chain Guide Mounting

1 - RIGHT TIMING CHAIN GUIDE (MOVABLE)
2 - LEFT TIMING CHAIN GUIDE (FIXED)
3 - FASTENER(S)
4 - CYLINDER HEAD PLUG(S)

CAUTION: Avoid damaging spark plug tubes when removing cylinder head bolts.

(32) Remove cylinder head bolts (Fig. 20).

(33) Remove cylinder head and gasket.

CLEANING

To ensure engine gasket sealing, proper surface preparation must be performed, especially with the use of aluminum engine components and multi-layer steel cylinder head gaskets.

NOTE: Multi-Layer Steel (MLS) head gaskets require a scratch free sealing surface.

Remove all gasket material from cylinder head and block (Refer to 9 - ENGINE - STANDARD PROCEDURE). Be careful not to gouge or scratch the aluminum head sealing surface.

Clean all engine oil passages.

INSPECTION

(1) Cylinder head must be flat within 0.1 mm (0.004 in.) (Fig. 21).

(2) Inspect camshaft bearing journals for scoring.

CYLINDER HEAD (Continued)

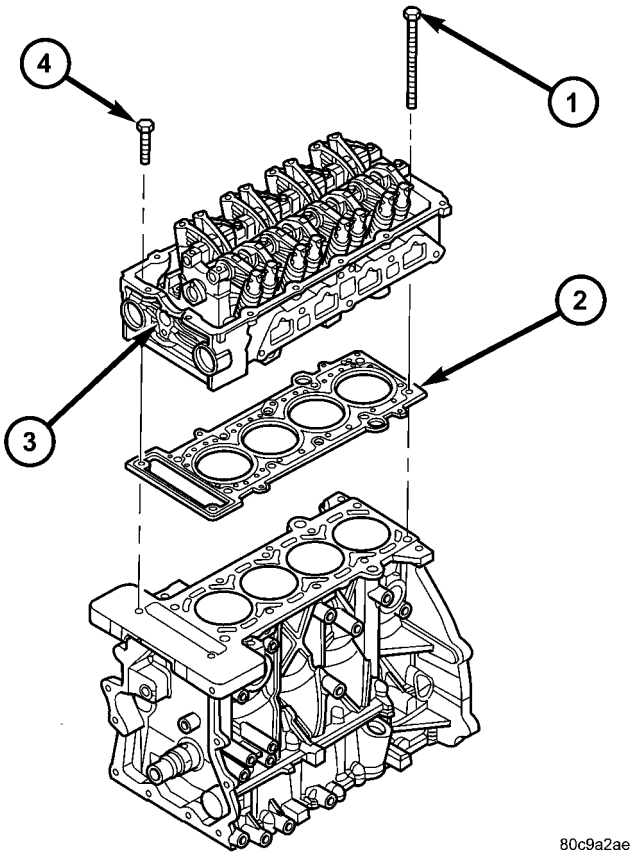

Fig. 20 Cylinder Head and Gasket

1 - M10 CYLINDER HEAD BOLT (QTY 10)
2 - CYLINDER HEAD GASKET
3 - CYLINDER HEAD
4 - M8 CYLINDER HEAD BOLT (QTY 2)

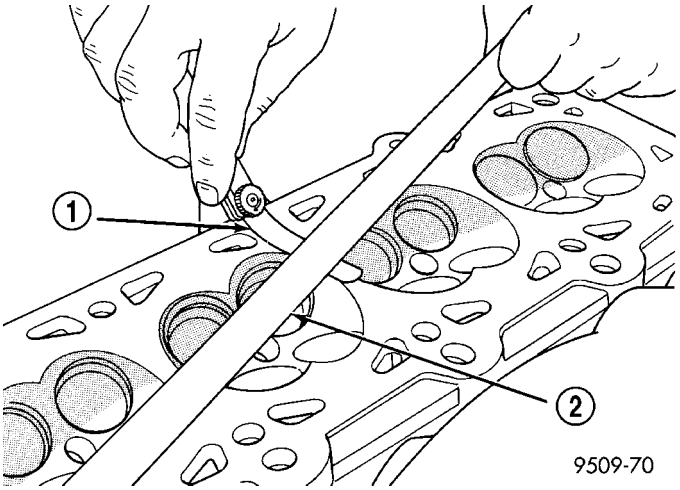

Fig. 21 Checking Cylinder Head Flatness

1 - FEELER GAUGE
2 - STRAIGHT EDGE

(3) Remove carbon and varnish deposits from inside of valve guides with a reliable guide cleaner.

(4) Using a small hole gauge and a micrometer, measure valve guides in 3 places top, middle and bottom (Fig. 22). (Refer to 9 - ENGINE - SPECIFICATIONS). Replace cylinder head if they are not within specification.

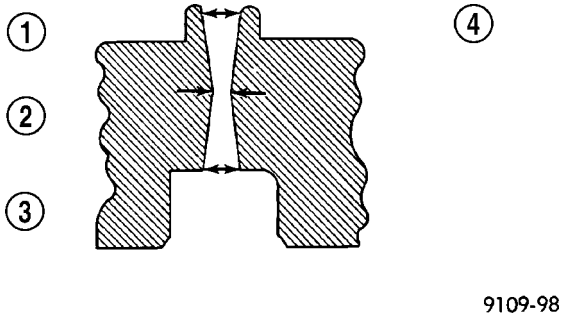

Fig. 22 Checking Wear on Valve Guide—Typical

1 - TOP
2 - MIDDLE
3 - BOTTOM
4 - CUT AWAY VIEW OF VALVE GUIDE MEASUREMENT LOCATIONS

INSTALLATION - CYLINDER HEAD

NOTE: The cylinder head bolts should be examined BEFORE reuse. If the threads are necked down, the bolt(s) should be replaced (Fig. 23).

Necking can be checked by holding a scale or straight edge against the threads. If all the threads do not contact the scale, the bolt(s) should be replaced.

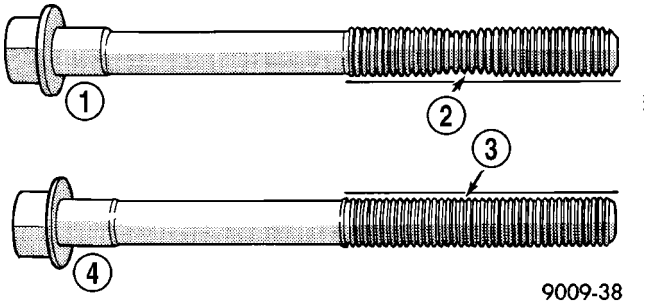

Fig. 23 Checking Bolts for Stretching (Necking)

1 - STRETCHED BOLT
2 - THREADS ARE NOT STRAIGHT ON LINE
3 - THREADS ARE STRAIGHT ON LINE
4 - UNSTRETCHED BOLT

(1) Clean the cylinder head and cylinder block sealing surfaces (Refer to 9 - ENGINE/CYLINDER HEAD - CLEANING).

(2) Position a new cylinder head gasket on the locating dowels.

(3) Position the cylinder head onto the engine block. Make sure the cylinder head seats fully over the locating dowels.

CYLINDER HEAD (Continued)

CAUTION: Avoid damaging spark plug tubes when installing/torquing cylinder head bolts.

(4) Before installing cylinder head bolts, the threads should be oiled with engine oil.

(5) Tighten the cylinder head bolts in the sequence shown in (Fig. 24). Using the 4 step torque method, tighten according to the following values:

Step One:

- Tighten the ten M10 bolts to 20 N·m (15 ft. lbs.)
- Tighten the two M8 bolts to 15 N·m (11 ft. lbs.)

Step Two:

- Tighten the ten M10 bolts to 41 N·m (30 ft. lbs.)

Step Three:

- Recheck the ten M10 bolts to 41 N·m (30 ft. lbs.)

Step Four:

- **Do not use a torque wrench for this step.** Tighten the ten M10 bolts an additional 90 degrees
- Tighten the two M8 bolts to 30 N·m (22 ft. lbs.)

(6) Install timing chain guides. Torque fasteners to

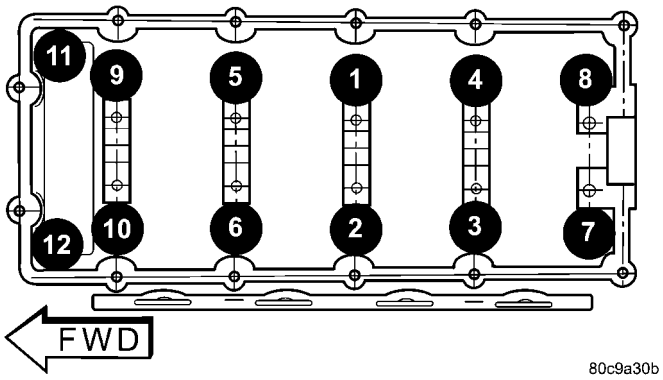

Fig. 24 Cylinder Head Bolt Tightening Sequence

28 N·m (250 in. lbs.) (Fig. 19).

(7) Retrieve timing chain from crankcase with a magnet or fabricated hook.

(8) Align triangular timing mark on cam sprocket with the timing chain link that was painted during disassembly. Install timing chain on cam sprocket (Fig. 16).

(9) Install camshaft sprocket on the camshaft.

CAUTION: Do Not use an impact wrench for tightening the camshaft sprocket bolt. Damage to the camshaft timing pin can result. Use a hand wrench only.

(10) Install camshaft sprocket bolt. While holding the camshaft sprocket with Special Tool 8435, torque bolt to 115 N·m (85 ft. lbs.) (Fig. 17).

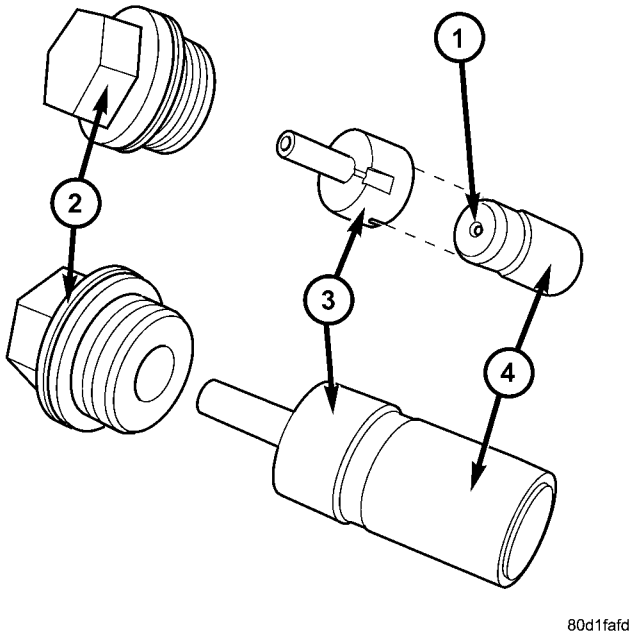

Fig. 25 Timing Chain Tensioner/Oil Reservoir Cap/Plug

1 - CHECK BALL
2 - PLUG WITH SEAL RING
3 - OIL RESERVOIR CAP
4 - TIMING CHAIN TENSIONER

(11) Reset the timing chain tensioner using the following method:

(a) Remove oil reservoir cap from timing chain tensioner (Fig. 25).

(b) Place tensioner on a clean flat surface.

(c) Place your palm against the tensioner and press down on the tensioner with continuous pressure until the fully extended tensioner bottoms out (Fig. 26).

(d) Install oil reservoir cap onto timing chain tensioner (Fig. 25).

(12) Install timing chain tensioner with oil reservoir cap into engine block (Fig. 18).

(13) Install timing chain tensioner plug with seal ring. Torque plug to 62 N·m (46 ft. lbs.).

CAUTION: Do not pry directly on chain. Damage to timing chain may occur.

(14) Using a long thin screwdriver, pry in on the right (movable) timing chain guide until the timing chain tensioner rachets out to tension the chain (Fig. 27).

NOTE: Ensure the timing chain is properly positioned within the channel of the timing chain guides.

CYLINDER HEAD (Continued)

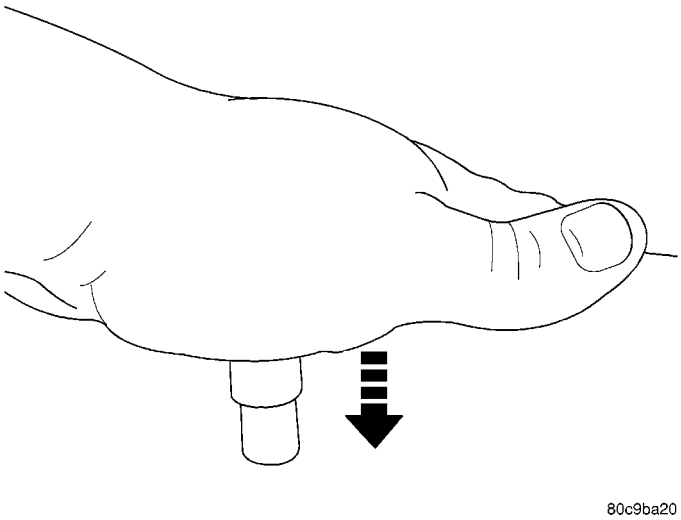

Fig. 26 Resetting Timing Chain Tensioner

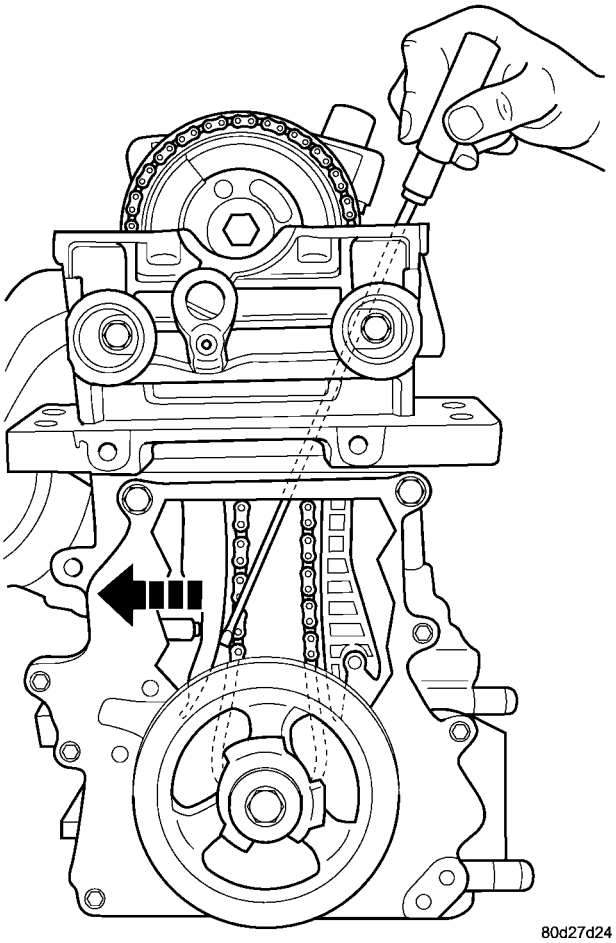

Fig. 27 Timing Chain Tensioner Activation

(15) Install cylinder head plugs. Torque to 18 N·m (162 in. lbs.) (Fig. 19).

(16) Install cylinder head cover (Refer to 9 - ENGINE/CYLINDER HEAD/CYLINDER HEAD COVER(S) - INSTALLATION).

(17) Install camshaft position sensor. Torque fastener to 10 N·m (85 in. lbs.). Reconnect connector.

(18) Install right engine mount bracket (Refer to 9 - ENGINE/ENGINE MOUNTING/ENGINE MOUNT BRACKET - INSTALLATION).

(19) Lower engine until right engine mount through bolt can be installed.

(20) Install right engine mount through bolt.

(21) Remove floor jack from under engine.

(22) Install fastener securing power steering return line to right engine mount bracket.

(23) Install fasteners securing power steering reservoir to right engine mount bracket.

(24) Install upper torque strut.

(25) Raise vehicle on hoist.

(26) Install fasteners securing exhaust pipe to exhaust manifold. Torque fasteners to 28 N·m (250 in. lbs.).

(27) Install lower torque strut.

(28) Install accessory drive belt splash shield.

(29) Install right front wheel.

(30) Lower vehicle.

(31) Connect upper radiator hose.

(32) Install fastener securing heater return tube to thermostat housing.

(33) Connect heater hoses to thermostat housing and heater return tube.

(34) Connect the following electrical components:

- Upstream Oxygen Sensor
- Camshaft Position Sensor
- Ignition Coil and Capacitor
- Fuel Injectors
- MAP Sensor
- Knock Sensor
- Electronic Throttle Control Motor
- ECT Sensor
- Generator

(35) Connect vacuum hoses to throttle body.

(36) Connect ground strap to cylinder head.

(37) Connect throttle body air inlet hose.

(38) Connect negative battery cable.

(39) Fill cooling system (Refer to 7 - COOLING/ENGINE - STANDARD PROCEDURE).

(40) Perform torque strut adjustment procedure (Refer to 9 - ENGINE/ENGINE MOUNTING/TORQUE STRUT - ADJUSTMENTS).

CYLINDER HEAD COVER

REMOVAL

(1) Disconnect the negative battery cable.

(2) Remove upper intake manifold (Refer to 9 - ENGINE/MANIFOLDS/INTAKE MANIFOLD - REMOVAL).

(3) Disconnect make-up air hose and PCV hoses (Fig. 28) from cylinder head cover.

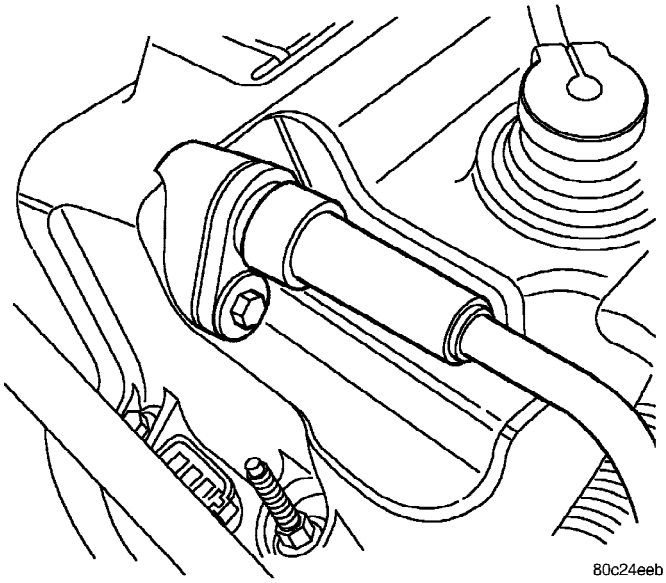

Fig. 28 PCV Valve Location

(4) Disconnect the ignition coil and capacitor electrical connectors.

(5) Remove the spark plug cables, twist spark plug boots, then pull straight up.

(6) Remove ignition coil bolts and then remove the ignition coil and spark plug cables as an assembly.

(7) Remove ignition coil capacitor.

(8) Remove cylinder head cover bolts.

(9) Remove cylinder head cover (Fig. 29).

CLEANING

Clean cylinder head and cover mating surfaces using a suitable solvent.

INSPECTION

Inspect cover rails for flatness.

INSTALLATION

(1) Inspect gasket and seals (Fig. 30). Replace as necessary. For replacement of spark plug tube seals, (Refer to 9 - ENGINE/CYLINDER HEAD/SPARK PLUG TUBE SEAL - REMOVAL) and (Refer to 9 - ENGINE/CYLINDER HEAD/SPARK PLUG TUBE SEAL - INSTALLATION).

(2) Install cylinder head cover and gasket. The cylinder head cover bolts have to be tightened in 2 steps and in a tightening sequence. The first torque is to tighten the bolts to 6 N·m (60 in. lbs.) then tighten the bolts to 12 N·m (105 in. lbs.) (Fig. 31).

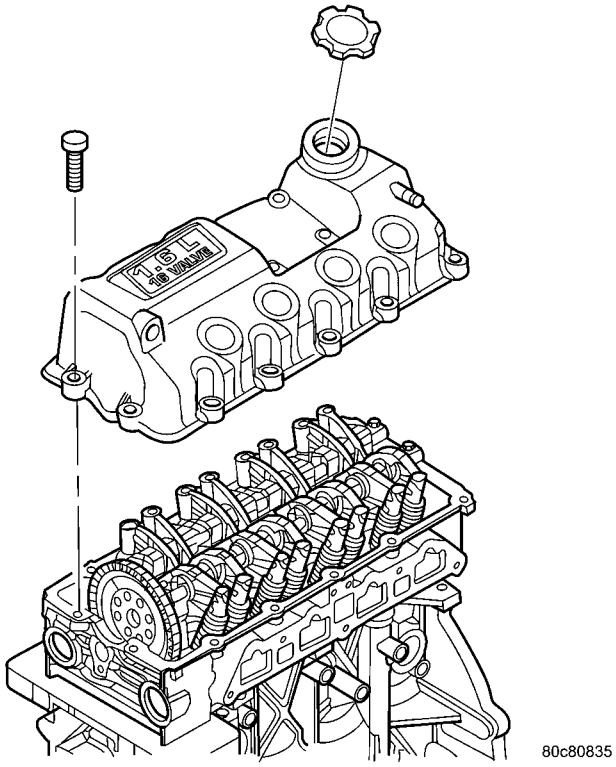

Fig. 29 Cylinder Head Cover

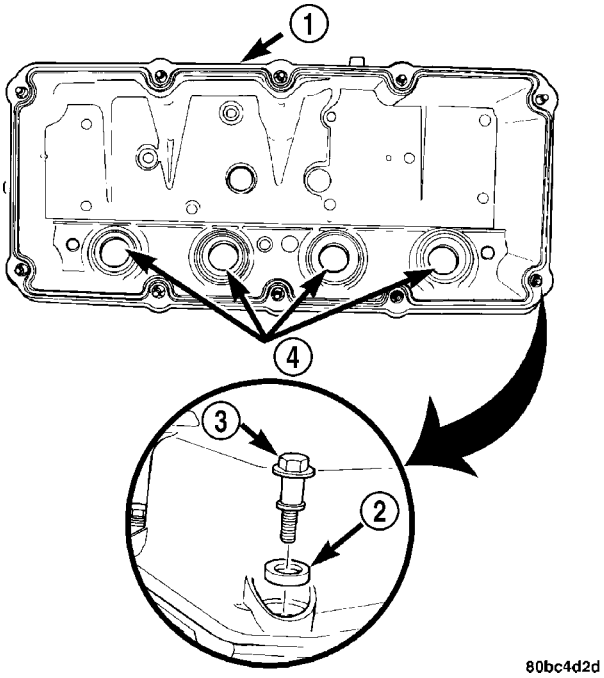

Fig. 30 Cylinder Head Cover Gasket and Seals

1 - CYLINDER HEAD COVER GASKET
2 - SEAL
3 - BOLT
4 - SPARK PLUG TUBE SEALS

CYLINDER HEAD COVER (Continued)

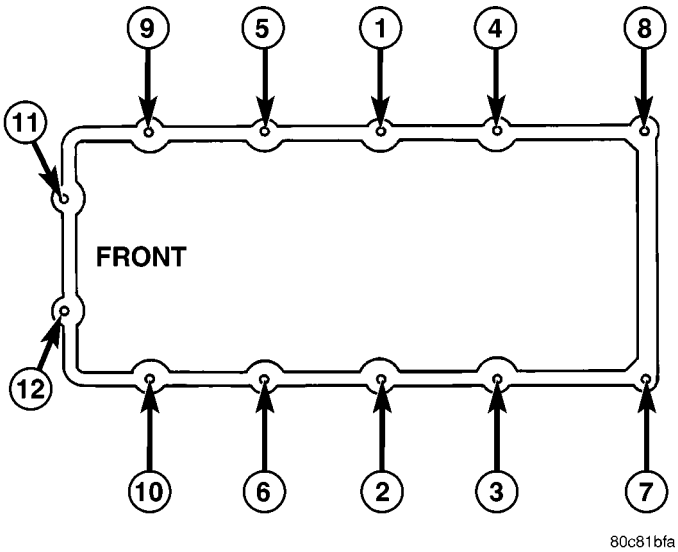

Fig. 31 Cylinder Head Cover Tightening Sequence

(3) Install ignition coil capacitor.

(4) Install ignition coil and spark plug cables. Make sure the rubber insulators are in place on the ignition coil (Fig. 32). Tighten ignition coil fasteners to 12 N·m (105 in. lbs.).

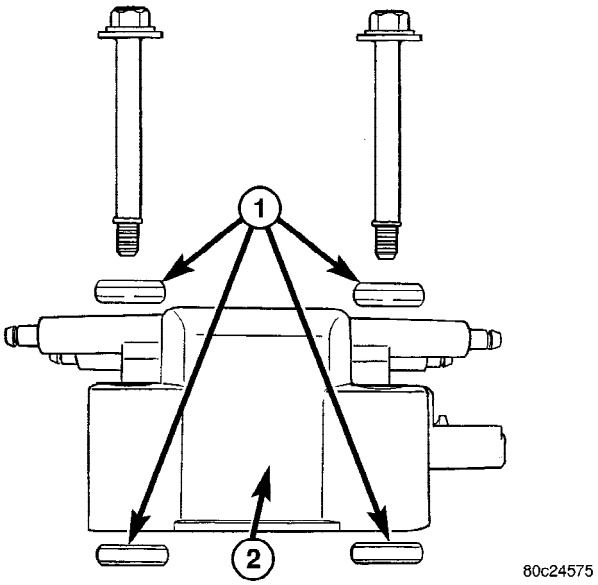

Fig. 32 Rubber Insulators and Ignition Coil

1 - Rubber Insulators
2 - Coil

(5) Connect make-up air and PCV hoses (Fig. 28).

(6) Connect the ignition coil and capacitor electrical connectors.

(7) Install upper intake manifold (Refer to 9 - ENGINE/MANIFOLDS/INTAKE MANIFOLD - INSTALLATION).

(8) Connect the negative battery cable.

SPARK PLUG TUBE SEAL

DESCRIPTION

The spark plug tube seals are located in the cylinder head cover (Fig. 33). These seals are pressed into the cylinder head cover to seal the outside perimeter of the spark plug tubes. If these seals show signs of hardness and/or cracking, they should be replaced.

REMOVAL

(1) Remove the cylinder head cover (Refer to 9 - ENGINE/CYLINDER HEAD/CYLINDER HEAD COVER - REMOVAL).

(2) Using an appropriate tool, carefully remove spark plug tube seals (Fig. 33). Care should be taken not to damage cylinder head cover sealing surfaces.

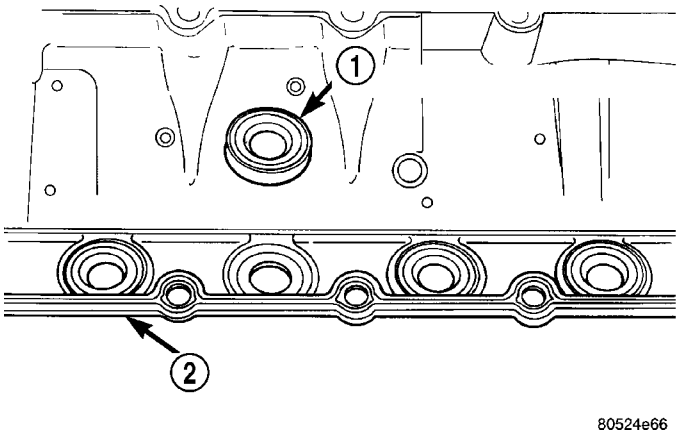

Fig. 33 Spark Plug Tube Seals

1 - SPARK PLUG TUBE SEAL
2 - CYLINDER HEAD COVER

INSTALLATION

(1) Clean all sealing surfaces.

NOTE: Position seal with the concave side facing the installation tool (Fig. 34).

(2) Install seals using Special Tool MB-998306 (Fig. 34). Only hand pressure on tool is needed to install new seals.

(3) Install the cylinder head cover (Refer to 9 - ENGINE/CYLINDER HEAD/CYLINDER HEAD COVER - INSTALLATION).

SPARK PLUG TUBE SEAL (Continued)

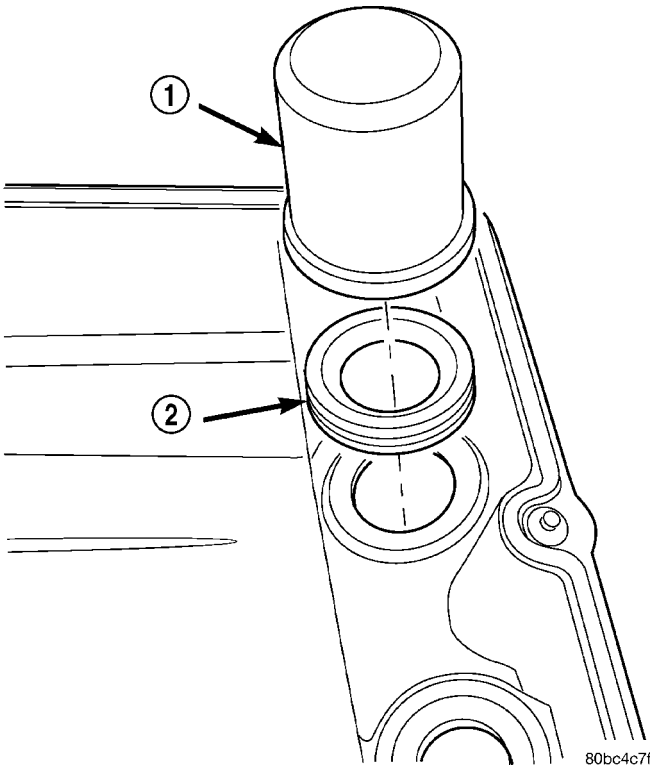

Fig. 34 Spark Plug Tube Seal Installation

1 - SPECIAL TOOL MD-998306
2 - SPARK PLUG TUBE SEAL

SPARK PLUG TUBE

REMOVAL

(1) Disconnect negative battery cable.

(2) Remove upper intake manifold (Refer to 9 - ENGINE/MANIFOLDS/INTAKE MANIFOLD - REMOVAL).

(3) Remove the cylinder head cover (Refer to 9 - ENGINE/CYLINDER HEAD/CYLINDER HEAD COVER(S) - REMOVAL).

(4) Remove lower intake manifold (Refer to 9 - ENGINE/MANIFOLDS/INTAKE MANIFOLD - REMOVAL).

(5) Position Special Tool 8819 on spark plug tube. Tighten the set screws to 16 N·m (142 in. lbs.) (Fig. 35).

(6) Using the Special Tool C-3752 attached to 8819, remove the tube from the cylinder head (Fig. 35).

(7) Loosen the set screws and rotate Special Tool 8819 one-quarter turn to remove from the tube. Discard the tube.

INSTALLATION

(1) Clean area around spark plug with Mopar® parts cleaner or equivalent.

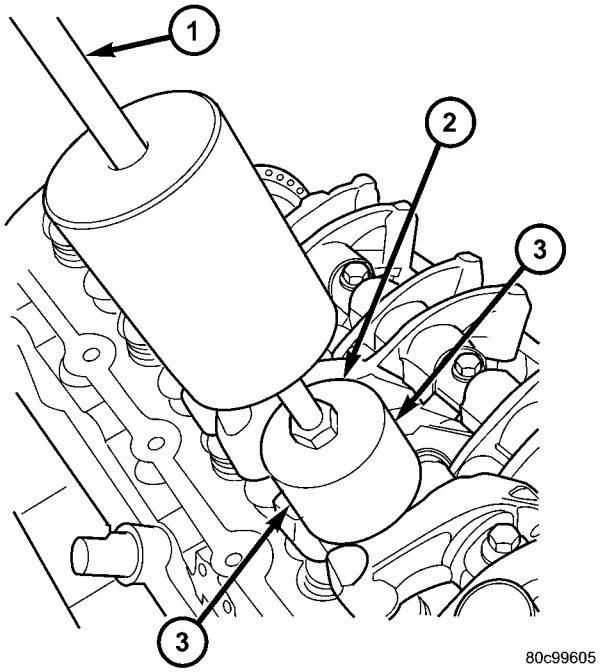

Fig. 35 Spark Plug Tube - Removal

1 - SPECIAL TOOL C-3752
2 - SPECIAL TOOL 8819
3 - SET SCREWS

(2) Apply Mopar® Stud and Bearing Mount or equivalent to a new tube approximately 1 mm (0.039 in.) from the end in a 3 mm (0.118 in.) wide area.

(3) Remove the spark plug.

(4) Install Special Tool 8447–1 into the spark plug bore (Fig. 36).

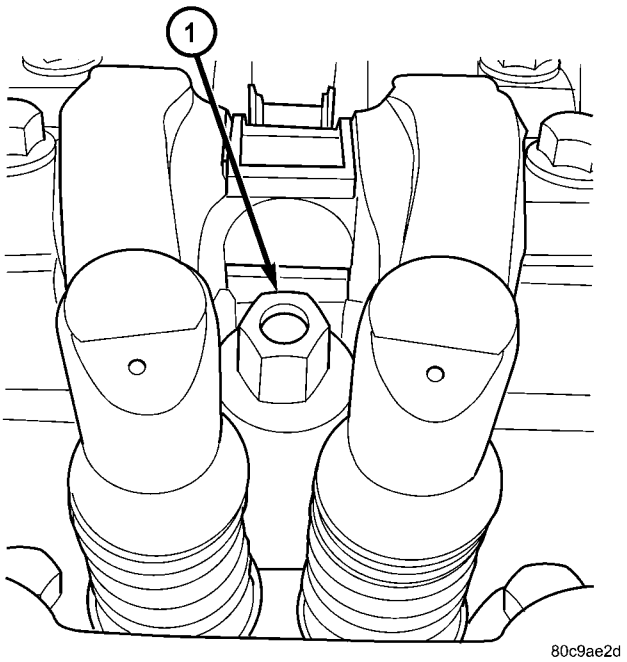

Fig. 36 Special Tool 8447-1

1 - SPECIAL TOOL 8447-1

SPARK PLUG TUBE (Continued)

(5) Install sealer end of tube into the cylinder head. Carefully install the tube using Special Tool 8447–2 Installer and mallet until Special Tool 8447–2 bottoms against 8447–1 (Fig. 37).

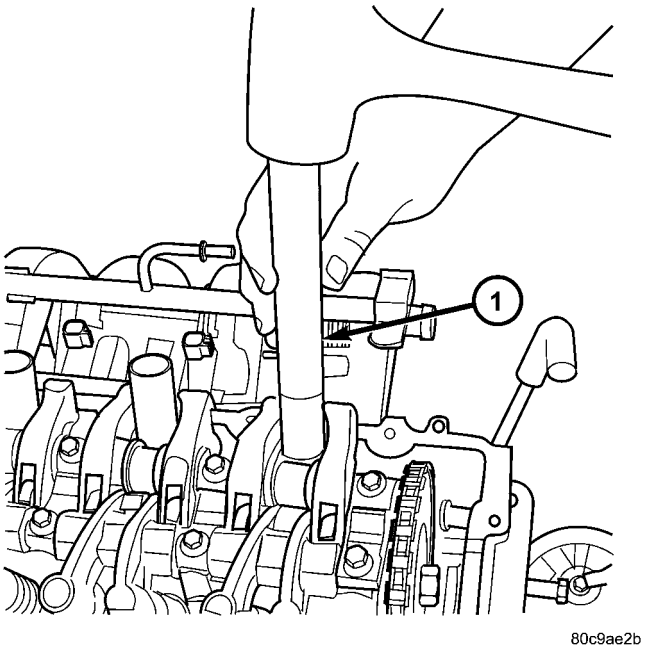

Fig. 37 Spark Plug Tube Installation

1 - SPECIAL TOOL 8447-2

(6) Unscrew Special Tool 8447–1 from the spark plug bore. Using the long bolt (8447–3), remove Special Tool 8447–1 (Fig. 38).

(7) Install the spark plug.

(8) Install lower intake manifold (Refer to 9 - ENGINE/MANIFOLDS/INTAKE MANIFOLD - INSTALLATION).

(9) Install the cylinder head cover (Refer to 9 - ENGINE/CYLINDER HEAD/CYLINDER HEAD COVER(S) - INSTALLATION).

(10) Install upper intake manifold (Refer to 9 - ENGINE/MANIFOLDS/INTAKE MANIFOLD - INSTALLATION).

(11) Connect negative battery cable.

ROCKER ARM SHAFT / ROCKER ARM / LASH ADJUSTER

DESCRIPTION

The two rocker shafts are mounted to the top of the camshaft bearing caps. The left rocker shaft holds the eight roller rocker arms for the intake valves, while the right rocker shaft holds the four forked roller rocker arms for the exhaust valves. The

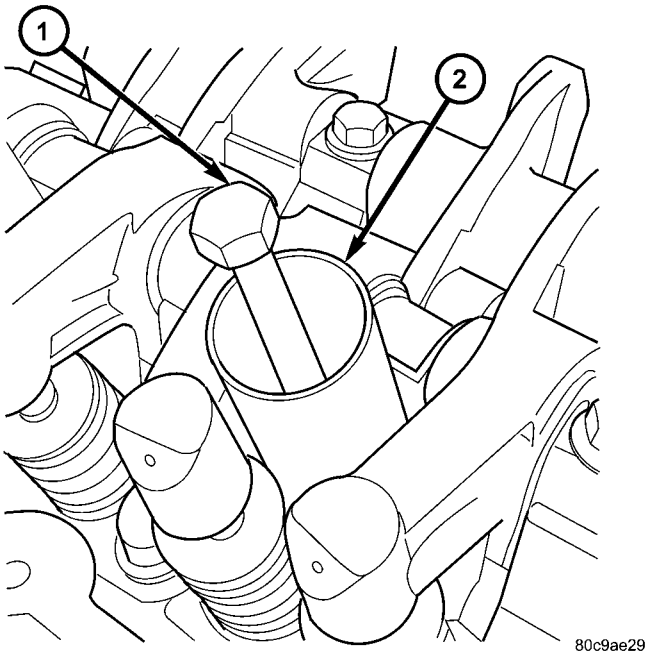

Fig. 38 8447-1 Removal

1 - SPECIAL TOOL 8447-3 (BOLT)
2 - SPARK PLUG TUBE

roller rocker arms are mounted to rocker shafts and are positioned over the camshaft and valve stems. The rocker shaft is installed through the center of the roller rocker arms, which allows the roller rocker arms to pivot. The valve stem end of the roller rocker arms contain a hydraulic lash adjuster. The hydraulic lash adjuster, using oil pressure, constantly maintains the correct clearance between the rocker arm and camshaft/valve stem. The camshaft end of the roller rocker arm contains a roller that rides on the lobe of the camshaft. Roller rocker arms provide the camshaft with a quiet, low-friction means of opening the valves. Hydraulic lash adjusters are replaced as an assembly with the rocker arms (Fig. 39).

REMOVAL

(1) Disconnect negative battery cable.

(2) Remove cylinder head cover (Refer to 9 - ENGINE/CYLINDER HEAD/CYLINDER HEAD COVER - REMOVAL).

NOTE: Use the following procedure to remove both the intake and exhaust rocker shafts.

CAUTION: To avoid damage to the rocker shafts, loosen each rocker shaft/camshaft bearing cap bolt one turn at a time in the following sequence:

ROCKER ARM SHAFT / ROCKER ARM / LASH ADJUSTER (Continued)

(3) Loosen the rocker shaft/camshaft bearing cap bolts starting with the center bolt and working toward the ends.

(4) Remove the rocker shafts/roller rocker arm assemblies (Fig. 39).

NOTE: Hydraulic lash adjusters are replaced as an assembly with the rocker arms.

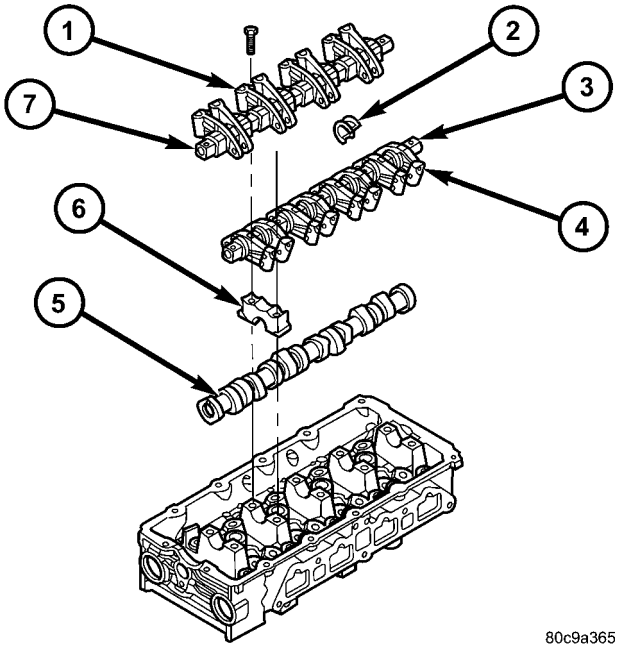

Fig. 39 Rocker Arm Shafts/Lash Adjusters/Camshaft

1 - EXHAUST VALVE ROCKER ARM
2 - INTAKE VALVE ROCKER ARM SPACER
3 - INTAKE VALVE ROCKER SHAFT
4 - INTAKE VALVE ROCKER ARM
5 - CAMSHAFT
6 - CAMSHAFT BEARING CAP
7 - EXHAUST VALVE ROCKER SHAFT

INSTALLATION

(1) Lubricate the roller portion of the rocker arms with clean engine oil.

(2) Install the rocker shaft/roller rocker arm assemblies on the camshaft bearing caps, camshaft, and valve stems (Fig. 39).

(3) Hand start rocker shaft/camshaft bearing cap bolts.

NOTE: When tightening the rocker shaft/camshaft bearing cap bolts, ensure the camshaft bearing caps are fully seated and the roller rocker arms remain seated in their proper position.

(4) Tighten the rocker shaft/camshaft bearing cap bolts gradually in the sequence shown in (Fig. 40). Final torque all bolts to 25 N·m (225 in. lbs.).

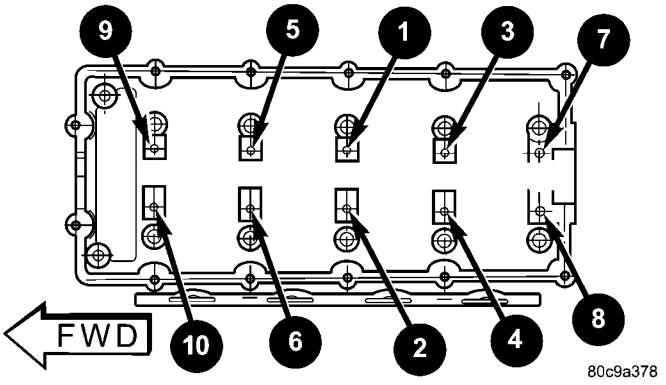

Fig. 40 Rocker Arm Shaft Tightening Sequence

(5) Install cylinder head cover (Refer to 9 - ENGINE/CYLINDER HEAD/CYLINDER HEAD COVER - INSTALLATION).

(6) Connect negative battery cable.

CAMSHAFT

REMOVAL

(1) Disconnect negative battery cable.

(2) Remove cylinder head cover (Refer to 9 - ENGINE/CYLINDER HEAD/CYLINDER HEAD COVER - REMOVAL).

(3) Disconnect camshaft position sensor connector. Remove camshaft position sensor.

(4) Rotate crankshaft until number one cylinder is at TDC on compression stroke.

(5) Using Special Tool 8435 to hold camshaft sprocket, remove camshaft sprocket bolt (Fig. 41).

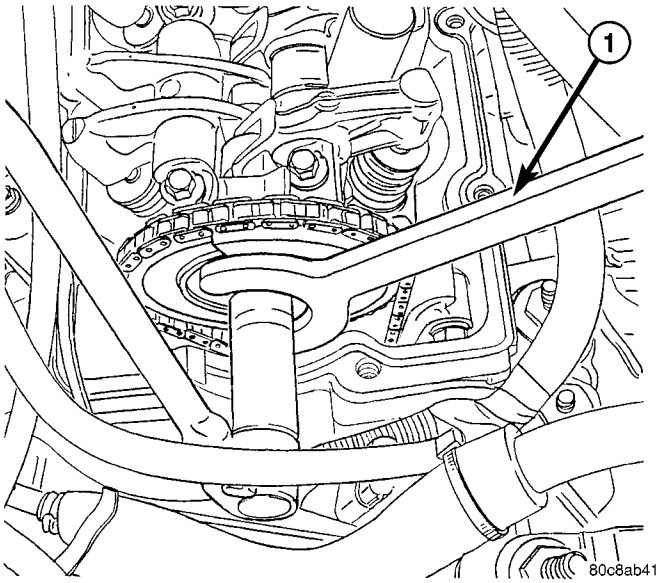

Fig. 41 Special Tool 8435 - Camshaft Sprocket Holding Wrench

1 - SPECIAL TOOL 8435

CAMSHAFT (Continued)

(6) Install Special Tool 8446 as shown in (Fig. 42). Hold tool against camshaft and tighten tool mounting bolts.

(7) Slide camshaft sprocket onto Special Tool 8446 (Fig. 42).

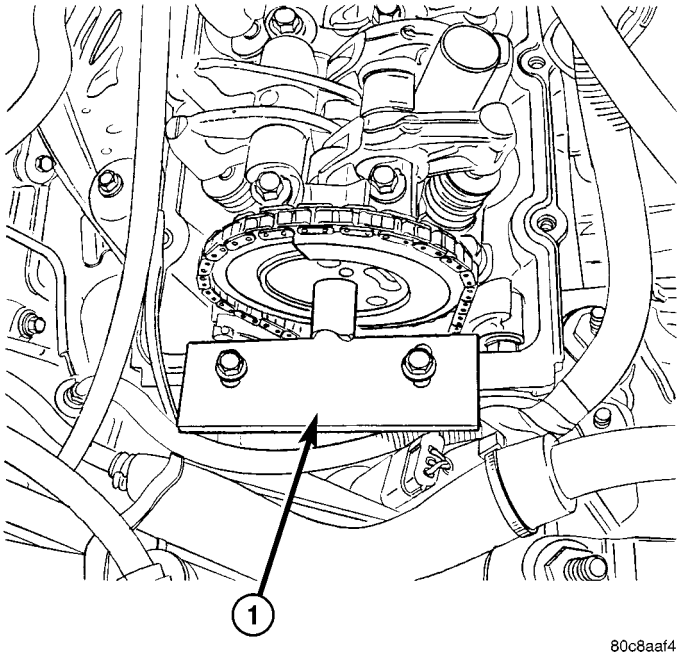

Fig. 42 Special Tool 8446 - Camshaft Sprocket Holder

1 - SPECIAL TOOL 8446

NOTE: Use the following procedure to remove both the intake and exhaust rocker shafts.

CAUTION: To avoid damage to the rocker shafts, loosen each rocker shaft/camshaft bearing cap bolt one turn at a time in the following sequence:

(8) Loosen the rocker shaft/camshaft bearing cap bolts starting with the center bolt and working toward the ends.

(9) Remove the rocker shafts/roller rocker arm assemblies (Fig. 43).

(10) Remove camshaft bearing caps noting orientation and numbering for reassembly purposes (Fig. 43).

(11) Lift camshaft from cylinder head (Fig. 43).

INSPECTION

(1) Inspect camshaft bearing journals for damage and binding (Fig. 44). If journals are binding, check the cylinder head for damage. Also check cylinder head oil holes for clogging.

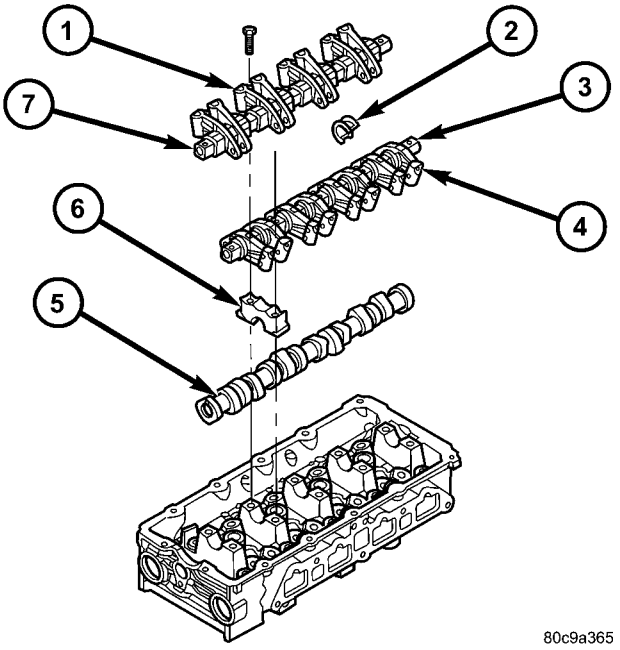

Fig. 43 Rocker Arm Shafts/Lash Adjusters/Camshaft

1 - EXHAUST VALVE ROCKER ARM
2 - INTAKE VALVE ROCKER ARM SPACER
3 - INTAKE VALVE ROCKER SHAFT
4 - INTAKE VALVE ROCKER ARM
5 - CAMSHAFT
6 - CAMSHAFT BEARING CAP
7 - EXHAUST VALVE ROCKER SHAFT

(2) Check the cam lobe and bearing surfaces for abnormal wear and damage. Replace camshaft if defective.

(3) Inspect camshaft bearing caps for abnormal wear and damage.

NOTE: If camshaft is replaced due to lobe wear or damage, always replace the rocker arms.

(4) Measure the lobe actual wear (unworn area - wear zone = actual wear) (Fig. 44) and replace camshaft if out of limit. Standard value is 0.0254 mm (0.001 in.), wear **limit** is 0.254 mm (0.010 in.).

INSTALLATION

(1) Lubricate the camshaft bearing journals with clean engine oil.

(2) Install the camshaft with the camshaft sprocket alignment pin in the 12 o'clock position.

(3) Install the camshaft bearing caps in their proper position (Fig. 43).

WARNING: Prior to installing the rocker shafts, ensure the camshaft sprocket alignment pin on the camshaft is in the 12 o'clock position. Failure to position the camshaft may result in damage to the valvetrain and pistons.

CAMSHAFT (Continued)

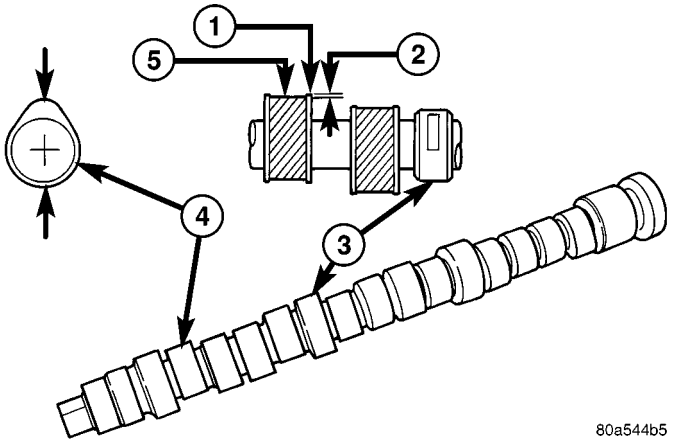

Fig. 44 Checking Camshaft for Wear

1 - UNWORN AREA
2 - ACTUAL WEAR
3 - BEARING JOURNAL
4 - LOBE
5 - WEAR ZONE

(4) Lubricate the roller portion of the rocker arms with clean engine oil.

(5) Install the rocker shaft/roller rocker arm assemblies on the camshaft bearing caps, camshaft, and valve stems.

(6) Hand start rocker shaft/camshaft bearing cap bolts.

NOTE: When tightening the rocker shaft/camshaft bearing cap bolts, ensure the camshaft bearing caps are fully seated and the roller rocker arms remain seated in their proper position.

(7) Tighten the rocker shaft/camshaft bearing cap bolts gradually in the sequence shown in (Fig. 45). Final torque all bolts to 25 N·m (225 in. lbs.).

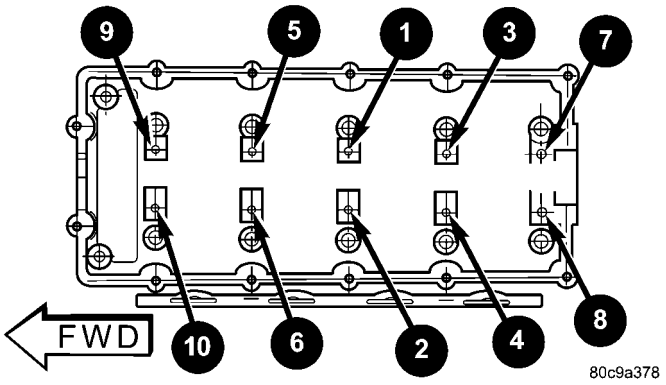

Fig. 45 Rocker Arm Shaft Tightening Sequence

NOTE: It may be necessary to use the flats on the front of the camshaft to slightly rotate camshaft for camshaft sprocket installation.

(8) Slide camshaft sprocket off Special Tool 8446 and into it's mounting position. Remove Special Tool 8446 from cylinder head (Fig. 42).

CAUTION: Do Not use an impact wrench for tightening the camshaft sprocket bolt. Damage to the camshaft timing pin can result. Use a hand wrench only.

(9) Install camshaft sprocket bolt. While holding the camshaft sprocket with Special Tool 8435, torque bolt to 115 N·m (85 ft. lbs.) (Fig. 41).

(10) Install camshaft position sensor. Torque fastener to 10 N·m (85 in. lbs.). Reconnect connector.

(11) Install cylinder head cover (Refer to 9 - ENGINE/CYLINDER HEAD/CYLINDER HEAD COVER - INSTALLATION).

(12) Connect negative battery cable.

VALVE SPRINGS AND SEALS (ON VEHICLE SERVICE)

STANDARD PROCEDURE - VALVE SPRINGS AND SEALS (ON VEHICLE SERVICE)

(1) Disconnect negative battery cable.

(2) Remove cylinder head cover (Refer to 9 - ENGINE/CYLINDER HEAD/CYLINDER HEAD COVER(S) - REMOVAL).

(3) Remove intake and exhaust rocker shaft/rocker arm assemblies (Refer to 9 - ENGINE/CYLINDER HEAD/ROCKER ARM / ADJUSTER ASSY - REMOVAL).

(4) Install Special Tool 8813 Adapter Studs/Spacers as shown in (Fig. 46).

(5) Install Special Tool MD998772A Compressor with Special Tool 6779 adapter as shown in (Fig. 46).

CAUTION: When removing spark plugs, use Special Tool 8448 Protective Sleeve on extension (Fig. 47) or damage to spark plug tubes may result.

(6) Remove spark plugs.

(7) Rotate crankshaft until piston of cylinder being worked on is at TDC.

(8) Install air hose attached to adapter tool in spark plug hole. Apply 90-120 psi of air pressure to the cylinder (Fig. 46).

(9) Using Special Tool MD998772A with adapter 6779 (Fig. 46), compress valve spring and remove valve locks.

(10) Release tension on valve spring. Remove valve spring retainer and valve spring.

(11) Remove valve seal/spring seat (Fig. 48).

(12) Replace valve seal/spring seat (Fig. 50).

(13) Install valve spring and valve spring retainer.

VALVE SPRINGS AND SEALS (ON VEHICLE SERVICE) (Continued)

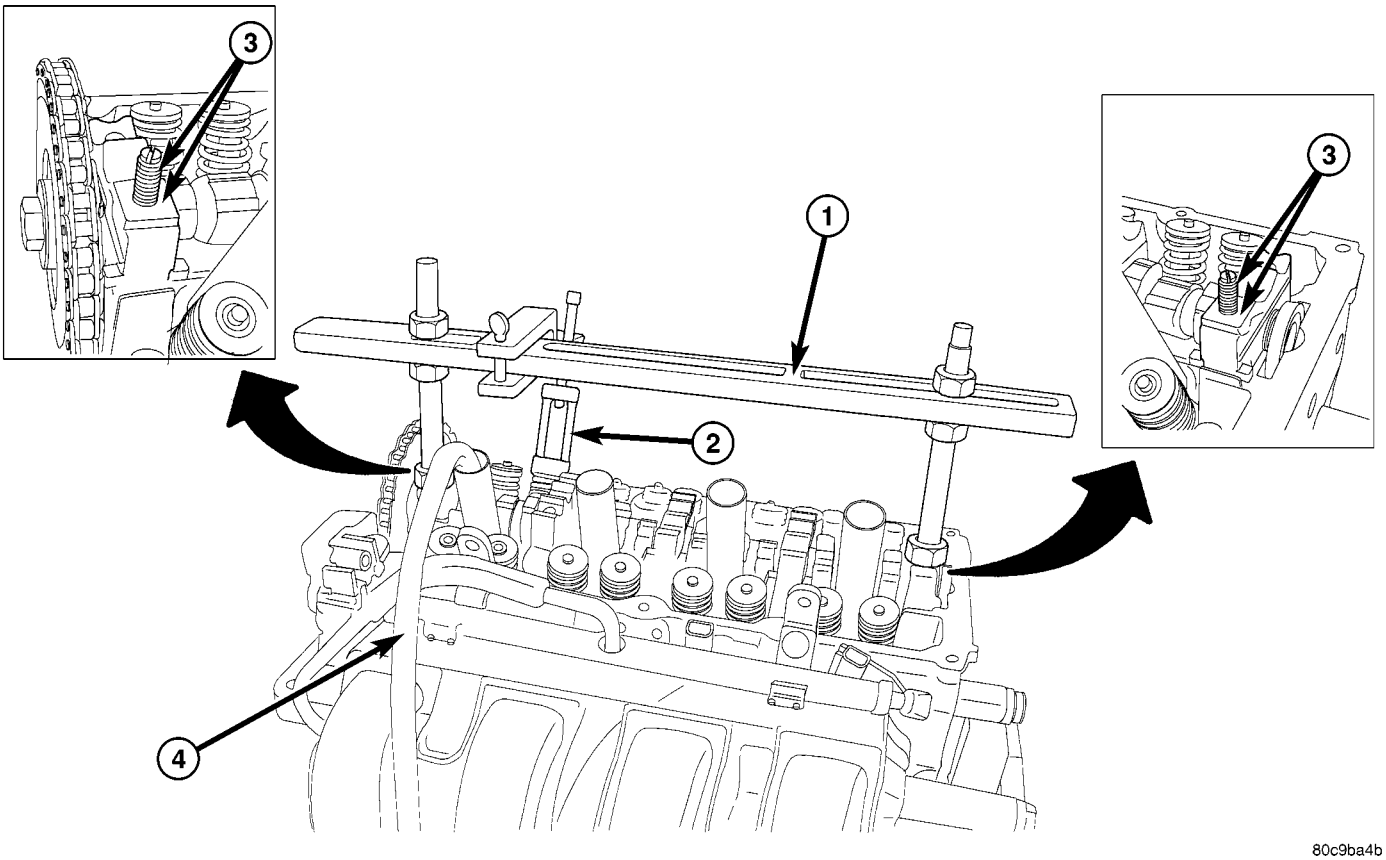

Fig. 46 Valve Spring/Seal - On Vehicle Service

1 - SPECIAL TOOL MD998772A
2 - SPECIAL TOOL 6779 ADAPTER
3 - SPECIAL TOOL 8813 ADAPTER STUDS/SPACERS
4 - AIR HOSE

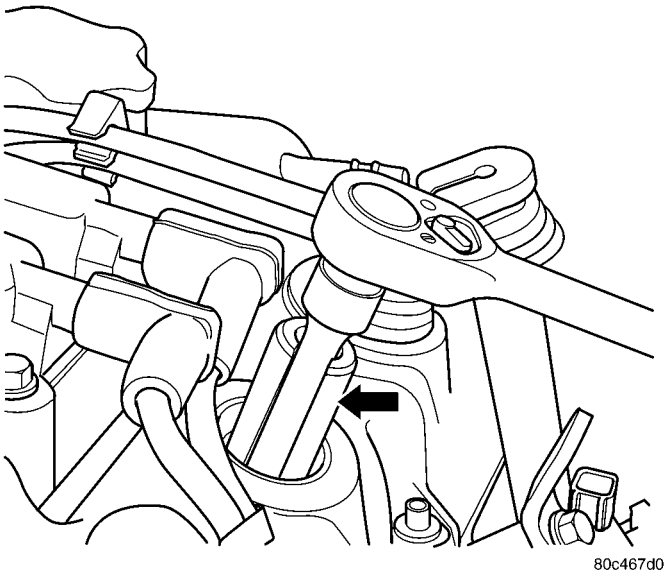

Fig. 47 Special Tool 8448 Protective Sleeve

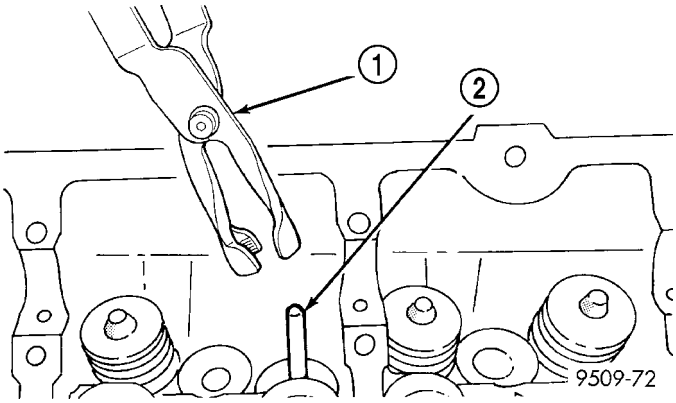

Fig. 48 Valve Stem Seal Removal - Typical

1 - VALVE SEAL TOOL
2 - VALVE STEM

(14) Using Special Tool MD998772A with adapter 6779 (Fig. 46), compress valve spring and install valve locks.

(15) Release tension on valve spring.

VALVE SPRINGS AND SEALS (ON VEHICLE SERVICE) (Continued)

(16) Repeat above procedures on remaining cylinders.

(17) Remove Special Tools MD998772A, 6779, 8813.

(18) Install intake and exhaust rocker shaft/rocker arm assemblies (Refer to 9 - ENGINE/CYLINDER HEAD/ROCKER ARM / ADJUSTER ASSY - INSTALLATION).

(19) Install cylinder head cover (Refer to 9 - ENGINE/CYLINDER HEAD/CYLINDER HEAD COVER - INSTALLATION).

(20) Install spark plugs.

(21) Connect negative battery cable.

VALVE SPRINGS AND SEALS (CYLINDER HEAD REMOVED)

STANDARD PROCEDURE - VALVE SPRINGS AND SEALS (CYLINDER HEAD REMOVED)

(1) Compress valve spring using Special Tools C-3422–D Spring Compressor with adapter 6526A (Fig. 49).

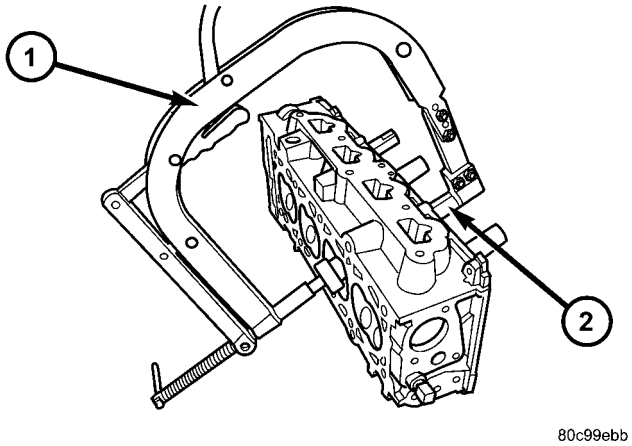

Fig. 49 Valve Spring Removal/Installation

1 - SPECIAL TOOL C-3422-D
2 - SPECIAL TOOL 6526A

(2) Remove valve locks (Fig. 50).

(3) Release valve spring compressor. Remove valve spring retainer and valve spring.

(4) Remove valve seal/spring seat (Fig. 48).

(5) Replace valve seal/spring seat.

(6) Install valve spring and valve spring retainer.

(7) Compress valve spring using Special Tools C-3422–D Spring Compressor with adapter 6526A (Fig. 49).

(8) Install valve locks.

(9) Release Spring compressor.

(10) Repeat procedure for remaining valve springs and seals.

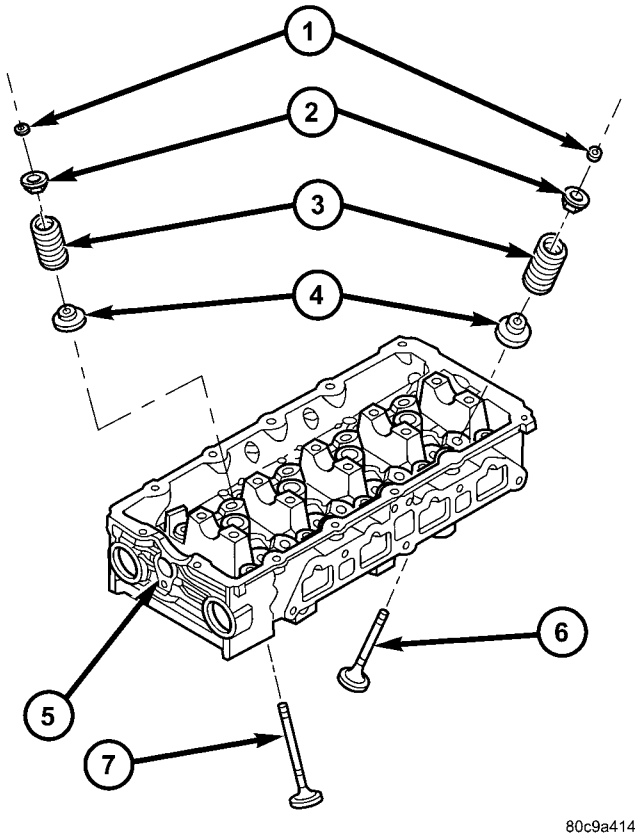

Fig. 50 Valves/Seals/Springs

1 - VALVE LOCKS
2 - VALVE SPRING RETAINER
3 - VALVE SPRING
4 - VALVE STEM SEAL/SPRING SEAT
5 - CYLINDER HEAD
6 - INTAKE VALVE
7 - EXHAUST VALVE

INSPECTION

When valves have been removed for inspection, reconditioning or replacement, valve springs should be tested (Fig. 51). **As an example;** the compression length of the spring to be tested is 38.00 mm (1.496 in.). Turn table of Tool C-647 until surface is in line with the 38.00 mm (1.496 inches.) mark on the threaded stud and the zero mark on the front. Place spring over stud on the table and lift compressing lever to set tone device. Pull on torque wrench until ping is heard. Take reading on torque wrench at this instant. Multiply this reading by two. This will give the spring load at test length. Fractional measurements are indicated on the table for finer adjustments. Refer to Engine Specifications to obtain specified height and allowable tensions (Refer to 9 -

VALVE SPRINGS AND SEALS (CYLINDER HEAD REMOVED) (Continued)

ENGINE - SPECIFICATIONS). Replace springs that do not meet specifications.

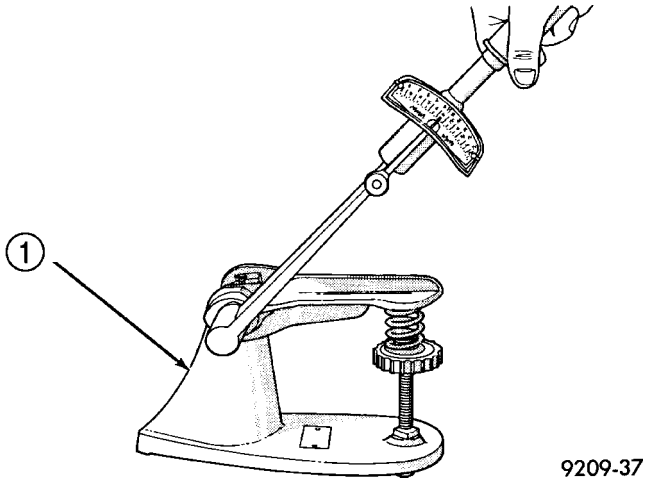

Fig. 51 Testing Valve Spring

1 - SPECIAL TOOL C-647

INTAKE/EXHAUST VALVES & SEATS

STANDARD PROCEDURE - VALVE AND VALVE SEAT REFACING

For all applicable valve and seat dimensions and angles (Refer to 9 - ENGINE - SPECIFICATIONS).

(1) Reface valves using a suitable valve refacing machine.

(2) Inspect the remaining margin after the valves are refaced (Fig. 52). Intake valves with less than 0.79 mm (0.0312 in.) margin and exhaust valves with less than 1.19 mm (0.0469 in.) margin should be replaced.

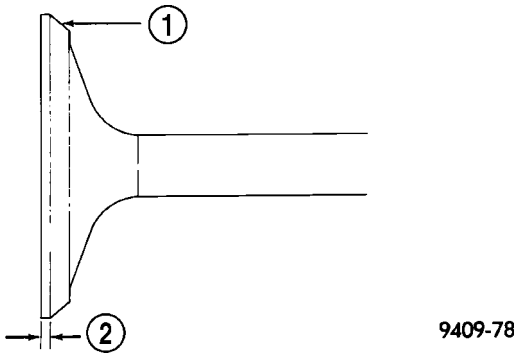

Fig. 52 Intake and Exhaust Valve Refacing

1 - VALVE FACE
2 - VALVE MARGIN

(3) Valve seats which are worn or burned can be reworked, provided that correct angle and seat width are maintained. Otherwise the cylinder head must be replaced.

(4) Reface valve seats using a suitable valve seat machine

(5) When refacing valve seats, it is important that the correct size valve guide pilot be used for reseating stones or cutter. A true and complete surface must be obtained.

(6) Measure the concentricity of valve seat and valve guide using a valve seat runout dial indicator. Total runout should not exceed. 0.051 mm (0.002 in.) (total indicator reading).

(7) Inspect the valve seat with Prussian blue to determine where the valve contacts the seat. To do this, coat valve seat **LIGHTLY**with Prussian blue then set valve in place. Rotate the valve with light pressure. If the blue is transferred to the center of valve face, contact is satisfactory. If the blue is transferred to top edge of the valve face, lower valve seat with a 15 degrees stone/cutter. If the blue is transferred to the bottom edge of valve face raise valve seat with a 65 degrees stone/cutter.

(8) When seat is properly positioned the width of intake and exhaust seats should be 0.75–1.25 mm (0.029–0.049 in.) (Fig. 53).

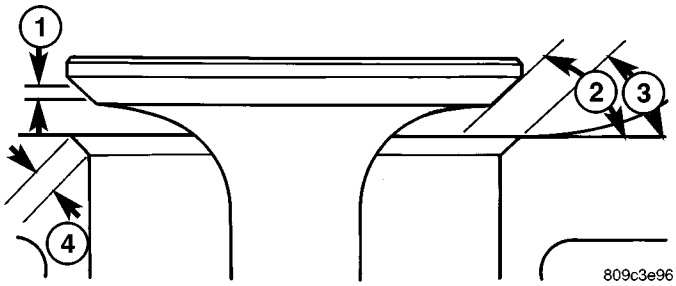

Fig. 53 Valve Face and Seat

1 - SEAT WIDTH
2 - FACE ANGLE
3 - SEAT ANGLE
4 - SEAT CONTACT AREA

(9) Check valve tip to cylinder head surface dimensions after machining the valve seats or faces. Grind valve tip until within specifications. Measure from valve tip to cylinder head surface when valve is installed in the head (measurement A) (Fig. 54). For valve tip specifications, (Refer to 9 - ENGINE - SPECIFICATIONS). The valve tip chamfer is needed to be reground to prevent seal damage when the valve is installed.

(10) Measure valve spring installed height (measurement B) (Fig. 54). Measure from the top of the valve spring seat/seal to the bottom of the valve spring retainer. For valve spring installed height specifications, (Refer to 9 - ENGINE - SPECIFICATIONS).

INTAKE/EXHAUST VALVES & SEATS (Continued)

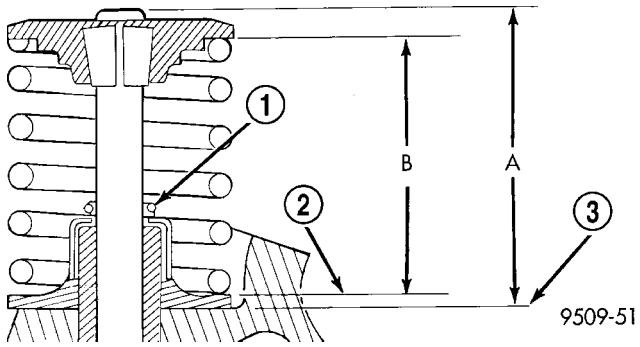

Fig. 54 Valve Tip Height/Valve Spring Installed Height

A - VALVE TIP HEIGHT
B - VALVE SPRING INSTALLED HEIGHT
1 - GARTER SPRING
2 - TOP OF VALVE SPRING SEAT/SEAL
3 - CYLINDER HEAD SURFACE

ENGINE BLOCK

DESCRIPTION

The cast iron engine block is a two-piece assembly, consisting of the engine block and bedplate (Fig. 55). The bedplate incorporates the main bearing caps and bolts to the engine block. This design offers a much stronger lower end and increased engine block rigidity. The rear oil seal retainer is integral with the block. The bedplate and block are serviced as an assembly.

STANDARD PROCEDURE - CYLINDER BORE HONING

(1) Used carefully, the cylinder bore resizing hone, recommended tool C-823 or equivalent, equipped with 220 grit stones, is the best tool for this honing procedure. In addition to deglazing, it will reduce taper and out-of-round as well as removing light scuffing, scoring or scratches. Usually a few strokes will clean up a bore and maintain the required limits.

(2) Deglazing of the cylinder walls may be done using a cylinder surfacing hone, recommended tool C-3501 or equivalent, equipped with 280 grit stones, if the cylinder bore is straight and round. 20–60 strokes depending on the bore condition, will be sufficient to provide a satisfactory surface. Use a light honing oil. **Do not use engine or transmission oil, mineral spirits or kerosene.** Inspect cylinder walls after each 20 strokes.

(3) Honing should be done by moving the hone up and down fast enough to get a cross-hatch pattern. When hone marks **intersect** at 40-60 degrees, the cross hatch angle is most satisfactory for proper seating of rings (Fig. 56).

ENGINE BLOCK (Continued)

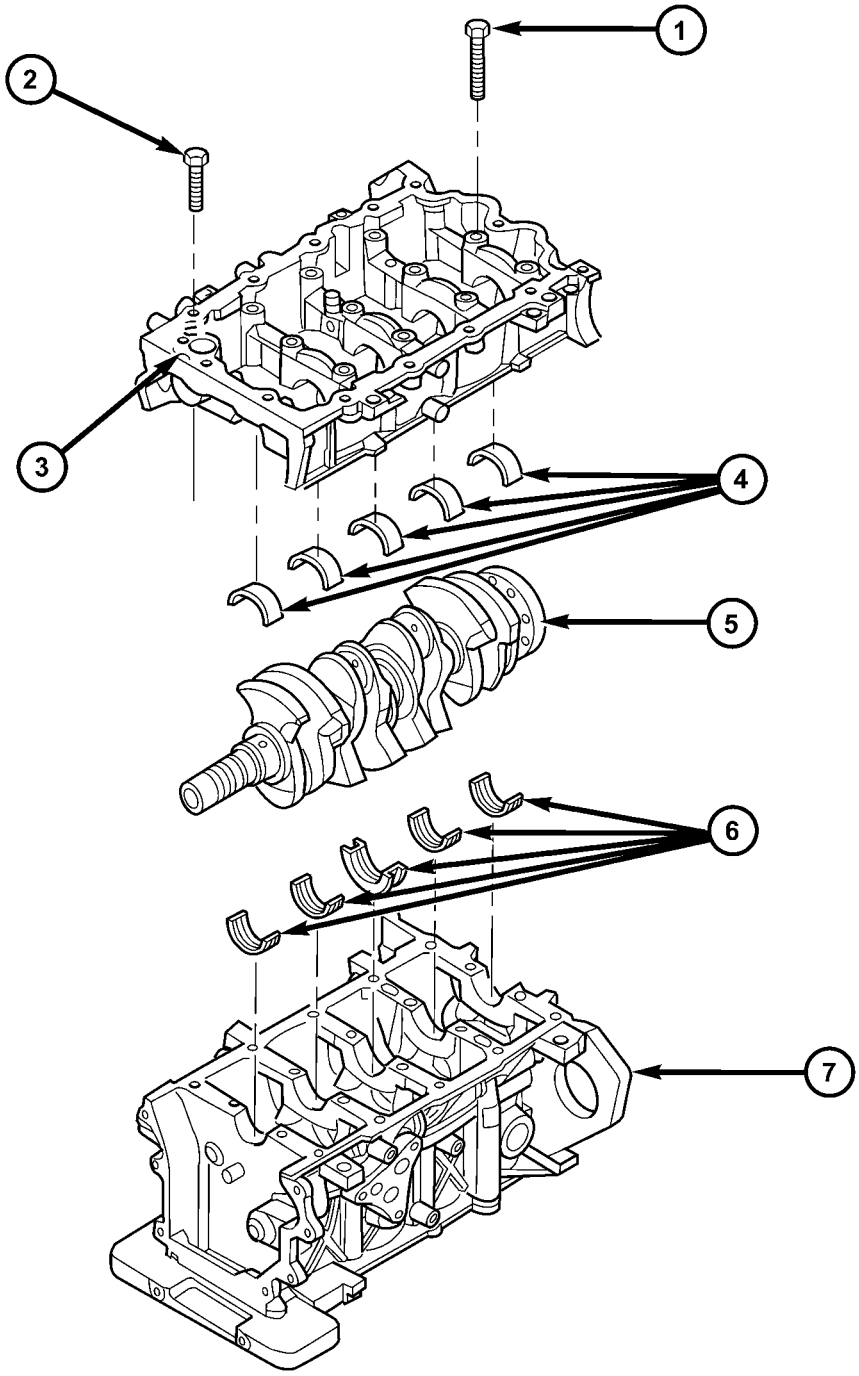

Fig. 55 Engine Block/Bedplate/Crankshaft

1 - MAIN BEARING CAP BOLTS
2 - BEDPLATE BOLTS
3 - BEDPLATE
4 - LOWER CRANKSHAFT MAIN BEARINGS
5 - CRANKSHAFT
6 - UPPER CRANKSHAFT MAIN BEARINGS
7 - ENGINE BLOCK

(4) A controlled hone motor speed between 200–300 RPM is necessary to obtain the proper cross-hatch angle. The number of up and down strokes per minute can be regulated to get the desired 40–60 degree angle. Faster up and down strokes increase the cross-hatch angle.

(5) After honing, it is necessary that the block be cleaned again to remove all traces of abrasive.

ENGINE BLOCK (Continued)

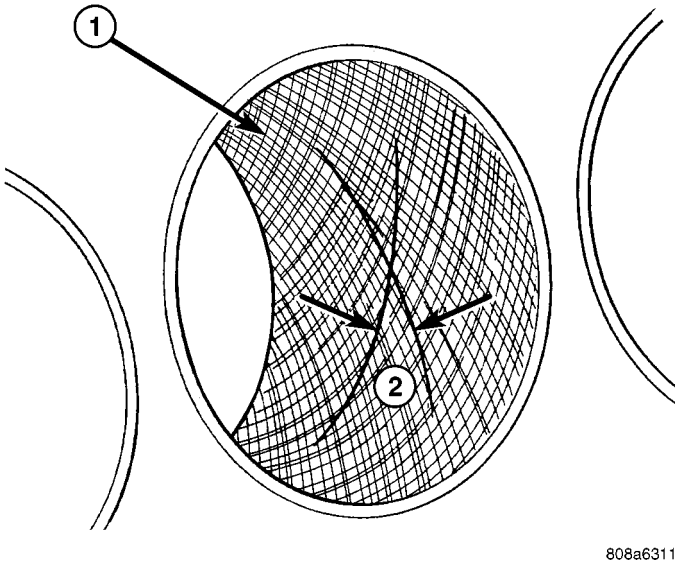

Fig. 56 Cylinder Bore Cross-Hatch Pattern

1 - CROSS-HATCH PATTERN
2 - 40°–60°

CAUTION: Ensure all abrasives are removed from engine parts after honing. It is recommended that a solution of soap and hot water be used with a brush and the parts then thoroughly dried. The bore can be considered clean when it can be wiped clean with a white cloth and cloth remains clean. Oil the bores after cleaning to prevent rusting.

CLEANING

Clean cylinder block thoroughly using a suitable cleaning solvent.

INSPECTION

ENGINE BLOCK

(1) Clean cylinder block thoroughly and check all core hole plugs for evidence of leaking.

(2) If new core plugs are to be installed, (Refer to 9 - ENGINE - STANDARD PROCEDURE - ENGINE CORE AND OIL GALLERY PLUGS).

(3) Examine block and cylinder bores for cracks or fractures.

(4) Check block deck surfaces for flatness. Deck surface must be within service limit of 0.1 mm (0.004 in.).

CYLINDER BORE

NOTE: The cylinder bores should be measured at normal room temperature, 21°C (70°F).

The cylinder walls should be checked for out-of-round and taper with Tool C119 or equivalent (Fig. 57) (Refer to 9 - ENGINE - SPECIFICATIONS). If the cylinder walls are badly scuffed or scored, the cylinder block should be replaced, and new pistons and rings fitted.

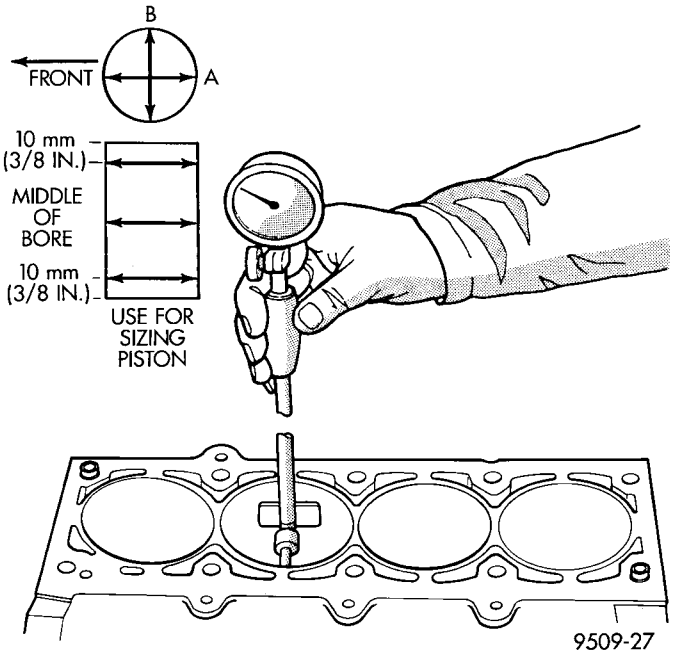

Fig. 57 Checking Cylinder Bore Size

Measure the cylinder bore at three levels in directions A and B (Fig. 57). Top measurement should be 10 mm (3/8 in.) down and bottom measurement should be 10 mm (3/8 in.) up from bottom of bore. (Refer to 9 - ENGINE - SPECIFICATIONS).

CRANKSHAFT MAIN BEARINGS

DESCRIPTION

NOTE: The upper and lower main bearing shells are NOT interchangeable.

The crankshaft is supported by five main bearings. All upper bearing shells in the crankcase have oil grooves/oil feed holes. All lower bearing shells installed in the (bedplate) main bearing cap are plain. Crankshaft end play is controlled by a flanged bearing on the number three upper main bearing journal (Fig. 58).

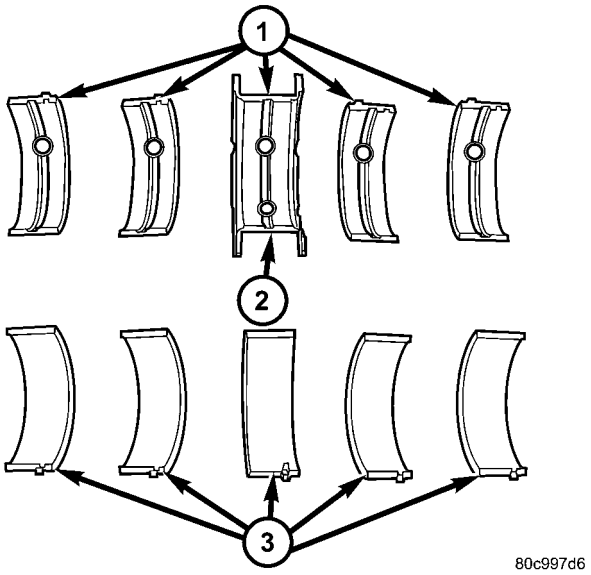

Fig. 58 Crankshaft Main Bearings

1 - UPPER CRANKSHAFT MAIN BEARINGS
2 - THRUST BEARING
3 - LOWER CRANKSHAFT MAIN BEARINGS

CRANKSHAFT

DESCRIPTION

The crankshaft is made of nodular cast iron and includes five main bearing journals and four connecting rod journals (Fig. 59). The number three journal is the location for the thrust bearing. The crankshaft utilizes a replaceable tonewheel for crankshaft position sensor function.

STANDARD PROCEDURE - CRANKSHAFT END PLAY

(1) Mount a dial indicator to front of engine, locating probe on nose of the crankshaft (Fig. 60).

(2) Move crankshaft all the way to the rear of its travel.

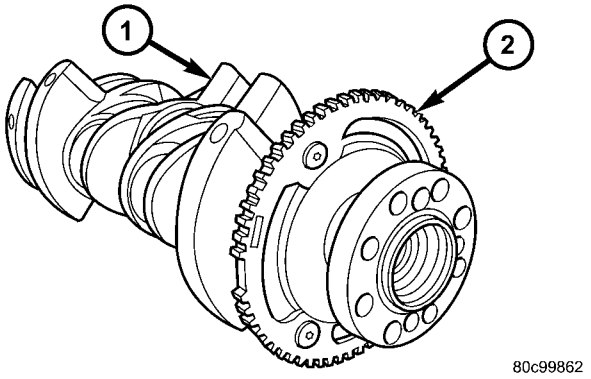

Fig. 59 Crankshaft

1 - CRANKSHAFT
2 - TONEWHEEL

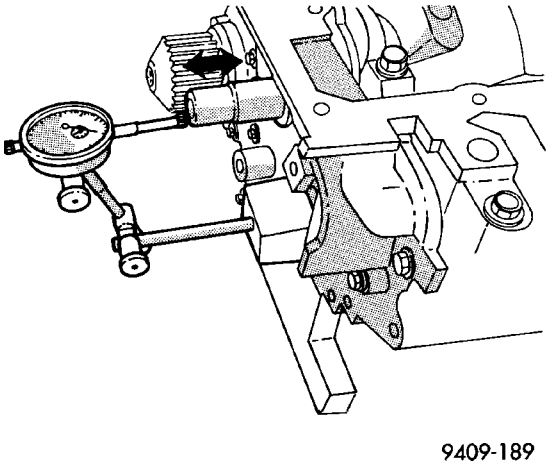

Fig. 60 Checking Crankshaft End Play — Typical

(3) Zero the dial indicator.

(4) Move crankshaft all the way to the front of its travel and read the dial indicator. For crankshaft specifications(Refer to 9 - ENGINE - SPECIFICATIONS).

REMOVAL

(1) Remove engine assembly from vehicle (Refer to 9 - ENGINE - REMOVAL).

(2) Separate transaxle from engine.

(3) Remove clutch and pressure plate. Remove flywheel.

(4) Remove crankshaft rear oil seal (Refer to 9 - ENGINE/ENGINE BLOCK/CRANKSHAFT OIL SEAL - REAR - REMOVAL).

(5) Mount engine on a suitable repair stand.

(6) Remove the right engine mount bracket (Refer to 9 - ENGINE/ENGINE MOUNTING/ENGINE MOUNT BRACKET - REMOVAL).

(7) Remove crankshaft vibration damper (Refer to 9 - ENGINE/ENGINE BLOCK/VIBRATION DAMPER - REMOVAL).

CRANKSHAFT (Continued)

(8) Remove the timing chain (Refer to 9 - ENGINE/VALVE TIMING/TIMING BELT/CHAIN AND SPROCKETS - REMOVAL).

(9) Remove the intake manifold (Refer to 9 - ENGINE/MANIFOLDS/INTAKE MANIFOLD - REMOVAL).

(10) Remove the oil dipstick tube.

(11) Remove oil pan(Refer to 9 - ENGINE/LUBRICATION/OIL PAN - REMOVAL).

(12) Remove oil pump pick-up tube (Fig. 61).

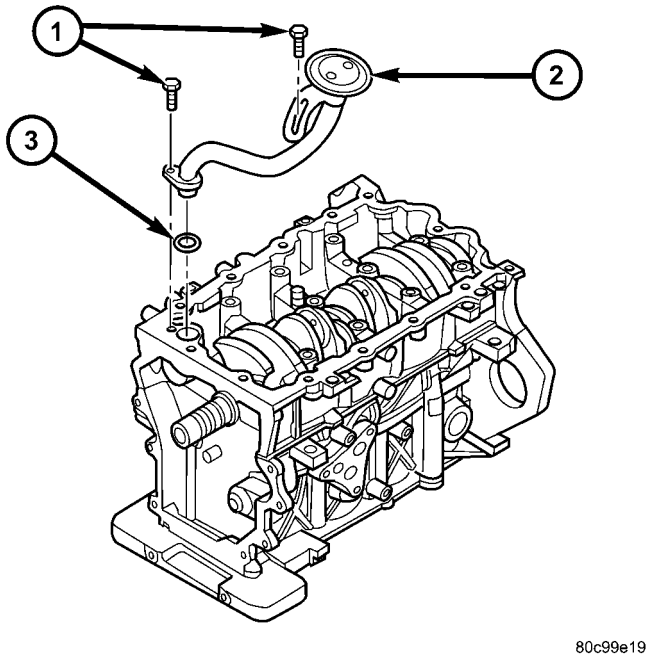

Fig. 61 Oil Pump Pick-up Tube

1 - FASTENERS
2 - OIL PUMP PICK-UP
3 - O-RING

(13) Remove crankshaft position sensor.

(14) Using a permanent ink or paint marker, identify cylinder number on each connecting rod cap.

CAUTION: DO NOT use a number stamp or a punch to mark connecting rods. Damage to connecting rod could occur.

(15) Remove all connecting rod bolts and caps. Care should be taken not to damage the fracture rod and cap surfaces.

NOTE: Do not reuse connecting rod bolts.

(16) Remove all main bearing cap and bedplate bolts from the engine block (Fig. 55).

(17) Using a mallet tap the bedplate loose from the engine block dowel pins.

CAUTION: Do not pry up on one side of the bedplate. Damage may occur to cylinder block and bedplate alignment.

(18) Bedplate should be removed evenly from the cylinder block dowel pins.

(19) Lift out crankshaft from cylinder block. Be sure not to damage the main bearings or journals when removing the crankshaft.

INSPECTION

The crankshaft journals should be checked for excessive wear, taper and scoring (Fig. 62). Limits of taper or out of round on any crankshaft journals should be held to 0.025 mm (0.001 in.). Journal grinding should not exceed 0.305 mm (0.012 in.) under the standard journal diameter. DO NOT grind thrust faces of No. 3 main bearing. DO NOT nick crank pin or bearing fillets. After grinding, remove rough edges from crankshaft oil holes and clean out all passages.

CAUTION: With the nodular cast iron crankshafts, it is important that the final paper or cloth polish be in the same direction as normal rotation in the engine.

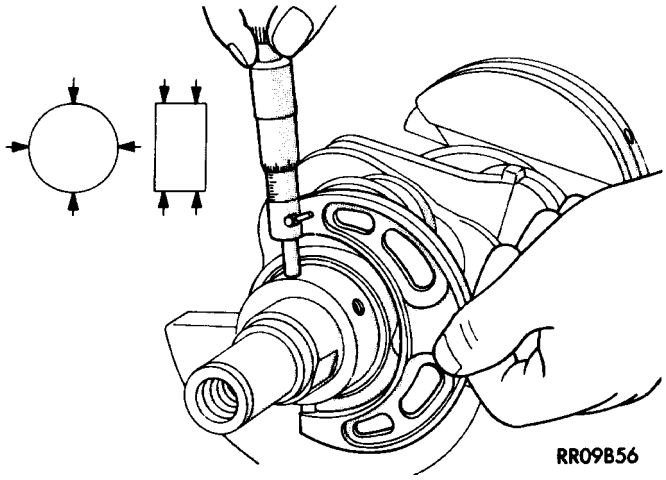

Fig. 62 Crankshaft Journal Measurements — Typical

The upper number three bearing half is flanged to carry the crankshaft thrust load and is **NOT** interchangeable with any other bearing halves in the engine (Fig. 63). All bearing cap bolts removed during service procedures are to be cleaned and oiled before installation.

INSTALLATION

(1) Install the upper main bearing shells with the lubrication groove in the cylinder block. (Fig. 63).

(2) Make certain oil holes in block line up with oil hole in bearings and bearing tabs seat in the block tab slots.

CRANKSHAFT (Continued)

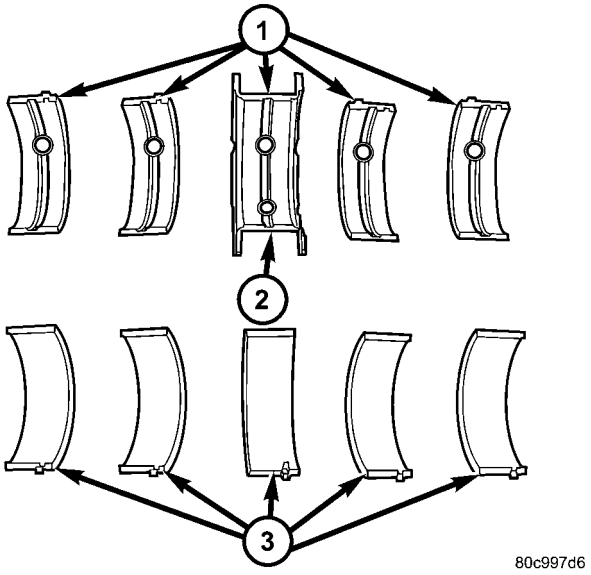

Fig. 63 Crankshaft Main Bearings

1 - UPPER CRANKSHAFT MAIN BEARINGS
2 - THRUST BEARING
3 - LOWER CRANKSHAFT MAIN BEARINGS

CAUTION: Do Not get oil on the bedplate mating surface. It will affect the sealer ability to seal the bedplate to cylinder block.

(3) Oil the bearings and journals and install crankshaft in cylinder block.

CAUTION: Use only the specified anaerobic sealer on the bedplate or damage may occur to the engine.

(4) Apply 1.5–2.0 mm (0.059–0.078 in.) bead of Mopar® Bed Plate Sealant to cylinder block as shown in (Fig. 64).

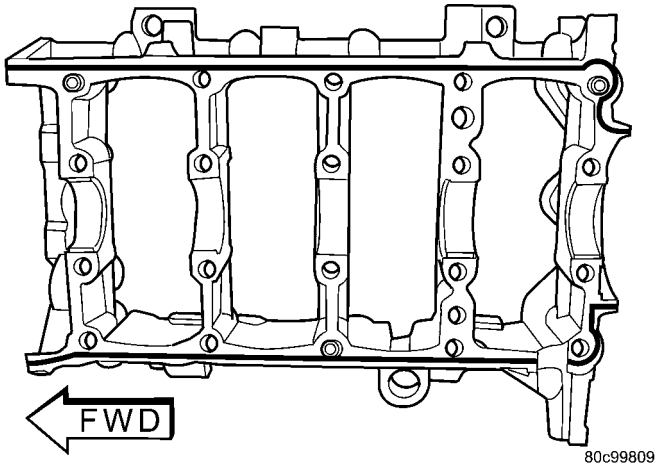

Fig. 64 Bedplate Sealing

(5) Install lower main bearings into main bearing cap/bedplate. Make certain the bearing tabs are seated into the bedplate slots. Install the main bearing/bedplate onto engine block.

(6) Before installing the main bearing cap/bedplate bolts, oil threads with clean engine oil, wipe off any excess oil.

(7) Install and finger tighten the main bearing cap bolts.

(8) Install and finger tighten the bedplate bolts.

(9) Snug the three bedplate bolts at the dowel locations (bolts 11, 17, and 20) to bring the bedplate down to the block (Fig. 65).

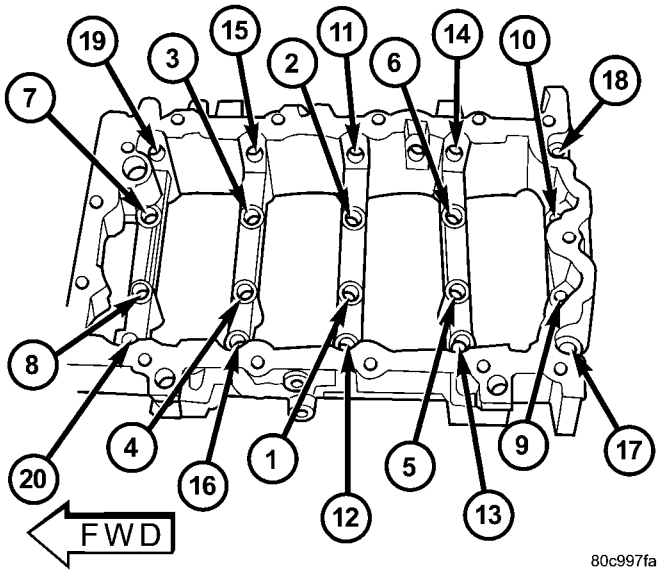

Fig. 65 Main Bearing Caps/Bedplate Torque Sequence

(10) Snug the remaining main bearing cap/bedplate bolts.

(11) Torque the main bearing cap /bedplate bolts to the sequence shown in (Fig. 65) to the following torque:

- Main Bearing Cap Bolts — 61 N·m (45 ft. lbs.)
- Bedplate Bolts — 30 N·m (22 ft. lbs.)

(12) After the main bearing bedplate is installed, check the crankshaft turning torque. The turning torque should not exceed 5.6 N·m (50 in. lbs.).

(13) Check crankshaft end play (Refer to 9 - ENGINE - SPECIFICATIONS).

(14) Install connecting rod bearings and caps. Install new connecting rod bolts and tighten to 26 N·m (19 ft. lbs.) plus 1/4 turn.

(15) Install oil pick-up tube (Fig. 61).

(16) Install the oil pan (Refer to 9 - ENGINE/LUBRICATION/OIL PAN - INSTALLATION).

(17) Install the oil dipstick tube.

(18) Install the intake manifold (Refer to 9 - ENGINE/MANIFOLDS/INTAKE MANIFOLD - INSTALLATION).

CRANKSHAFT (Continued)

(19) Install the timing chain (Refer to 9 - ENGINE/VALVE TIMING/TIMING BELT/CHAIN AND SPROCKETS - INSTALLATION).

(20) Install the right engine mount bracket (Refer to 9 - ENGINE/ENGINE MOUNTING/ENGINE MOUNT BRACKET - INSTALLATION).

(21) Remove engine from repair stand and position on Special Tools 6135 and 6710 Engine Dolly and Cradle. Install safety straps around the engine to cradle and tighten and lock them into position.

(22) Install the crankshaft rear oil seal. (Refer to 9 - ENGINE/ENGINE BLOCK/CRANKSHAFT OIL SEAL - REAR - INSTALLATION)

(23) Install flywheel. Install clutch and pressure plate.

(24) Install the transaxle to engine.

(25) Install the engine assembly (Refer to 9 - ENGINE - INSTALLATION).

CRANKSHAFT OIL SEAL - FRONT

REMOVAL

(1) Remove timing chain cover (Refer to 9 - ENGINE/VALVE TIMING/TIMING CHAIN COVER - REMOVAL).

(2) Using a suitable tool, drive the front crankshaft oil seal out of the timing chain cover from the back side.

INSTALLATION

(1) Install front crankshaft oil seal into timing cover using Special Tool 6780.

(2) Install timing chain cover (Refer to 9 - ENGINE/VALVE TIMING/TIMING CHAIN COVER - INSTALLATION).

CRANKSHAFT OIL SEAL - REAR

REMOVAL

(1) Remove transaxle (Refer to 21 - TRANSMISSION/TRANSAXLE/MANUAL - REMOVAL).

(2) Remove clutch and pressure plate.

(3) Remove flywheel.

(4) Insert a 3/16 flat bladed screwdriver between the dust lip and the metal case of the crankshaft seal. Angle the screwdriver (Fig. 66) through the dust lip against metal case of the seal. Pry out seal.

CAUTION: Do not permit the screwdriver blade to contact crankshaft seal surface. Contact of the screwdriver blade against crankshaft edge (chamfer) is permitted.

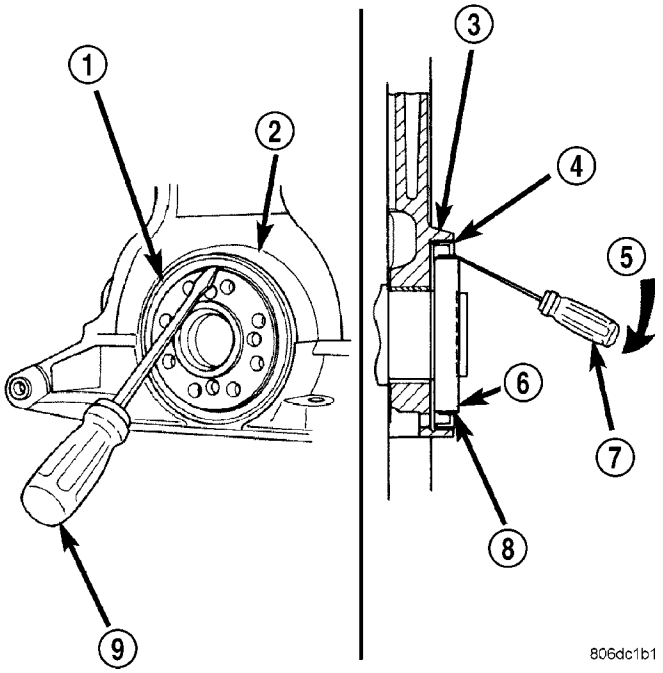

Fig. 66 Rear Crankshaft Oil Seal - Removal

1 - REAR CRANKSHAFT SEAL
2 - ENGINE BLOCK
3 - ENGINE BLOCK
4 - REAR CRANKSHAFT SEAL METAL CASE
5 - PRY IN THIS DIRECTION
6 - CRANKSHAFT
7 - SCREWDRIVER
8 - REAR CRANKSHAFT SEAL DUST LIP
9 - SCREWDRIVER

INSTALLATION

(1) Place Special Tool 6926-1 on crankshaft. This is a pilot tool with a magnetic base (Fig. 67).

(2) Position seal over pilot tool. Pilot tool should remain on crankshaft during installation of seal. Ensure that the lip of the seal is facing towards the crankcase during installation.

CAUTION: If the seal is driven into the block past flush, this may cause an oil leak.

(3) Drive the seal into the block using Special Tool 6926-2 and handle C-4171 until the tool bottoms out against the block (Fig. 67).

(4) Install flywheel.

(5) Install clutch and pressure plate.

(6) Install transaxle (Refer to 21 - TRANSMISSION/TRANSAXLE/MANUAL - INSTALLATION).

CRANKSHAFT OIL SEAL - REAR (Continued)

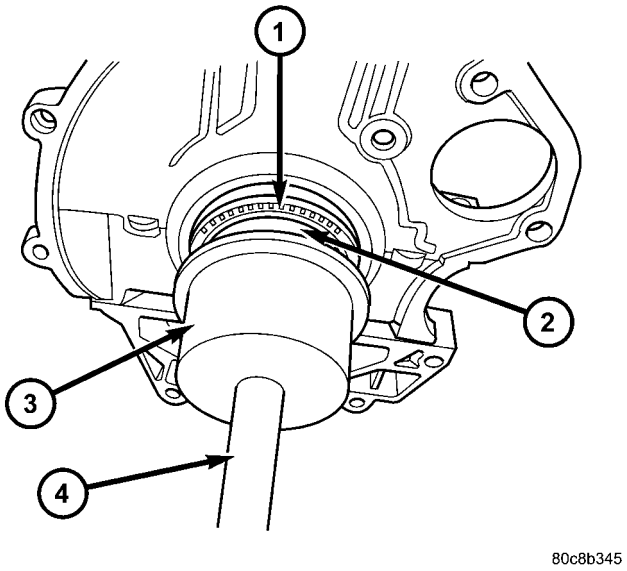

Fig. 67 Rear Crankshaft Seal Installation

1 - REAR CRANKSHAFT OIL SEAL
2 - SPECIAL TOOL 6926-1 PILOT
3 - SPECIAL TOOL 6926-2 INSTALLER
4 - SPECIAL TOOL C-4171 DRIVE HANDLE

PISTON & CONNECTING ROD

DESCRIPTION

NOTE: The engine DOES NOT have provisions for a free wheeling valve train. Non free wheeling valve train means, in the event of a broken timing chain, pistons will contact the valves.

The pistons are made of a cast aluminum alloy. The pistons have pressed-in pins attached to forged powdered metal connecting rods. The connecting rods are a cracked cap design and are not repairable. Hex head cap screws are used to provide alignment and durability in the assembly. The pistons and connecting rods are serviced as an assembly.

STANDARD PROCEDURE

STANDARD PROCEDURE - CONNECTING ROD AND BEARING - FITTING

(1) Measure connecting rod bearing clearance using Plastigage (Fig. 68). For more information on use of Plastigage (Refer to 9 - ENGINE - STANDARD PROCEDURE). Refer to Engine Specifications for connecting rod specifications. (Refer to 9 - ENGINE - SPECIFICATIONS)

CAUTION: Do not rotate crankshaft or the Plastigage may be smeared.

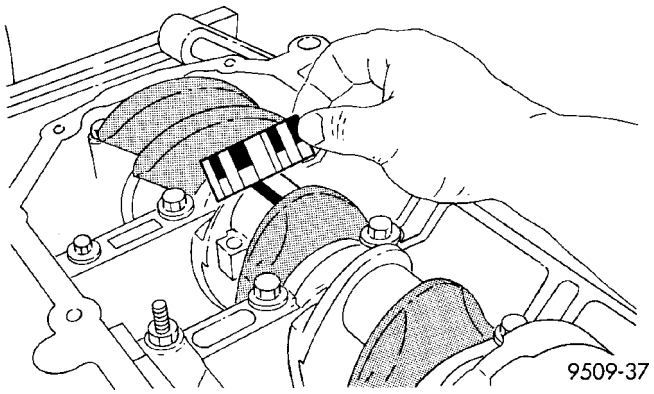

Fig. 68 Connecting Rod Bearing

NOTE: The rod bearing bolts should not be reused.

(2) Before installing **NEW** bolts, lubricate the threads with clean engine oil.

(3) Install each bolt finger tight than alternately torque each bolt to assemble the cap properly.

(4) Tighten the bolts to 26 N·m PLUS 1/4 turn (19 ft. lbs. PLUS 1/4 turn) **Do not use a torque wrench for last step.**

(5) Using a feeler gauge, check connecting rod side clearance (Fig. 69). Refer to Engine Specifications for connecting rod specifications. (Refer to 9 - ENGINE - SPECIFICATIONS)

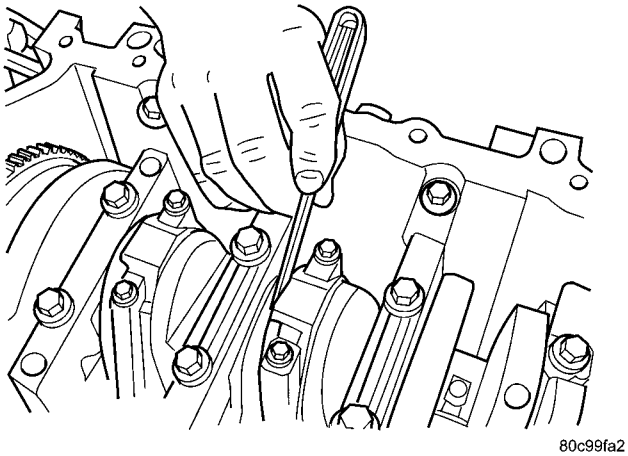

Fig. 69 Measuring Connecting Rod Side Clearance

STANDARD PROCEDURE - CYLINDER BORE AND PISTON - FITTING

Piston and cylinder wall must be clean and dry. Piston diameter should be measured 90 degrees to piston pin about 14 mm (9/16 inch.) from the bottom of the skirt as shown in (Fig. 71). Cylinder bores should be measured halfway down the cylinder bore and transverse (measurement location B) to the engine crankshaft center line shown in (Fig. 70). (Refer to 9 - ENGINE - SPECIFICATIONS) Correct

PISTON & CONNECTING ROD (Continued)

piston to bore clearance must be established in order to assure quiet and economical operation.

NOTE: Pistons and cylinder bores should be measured at normal room temperature, 70°F (21°C).

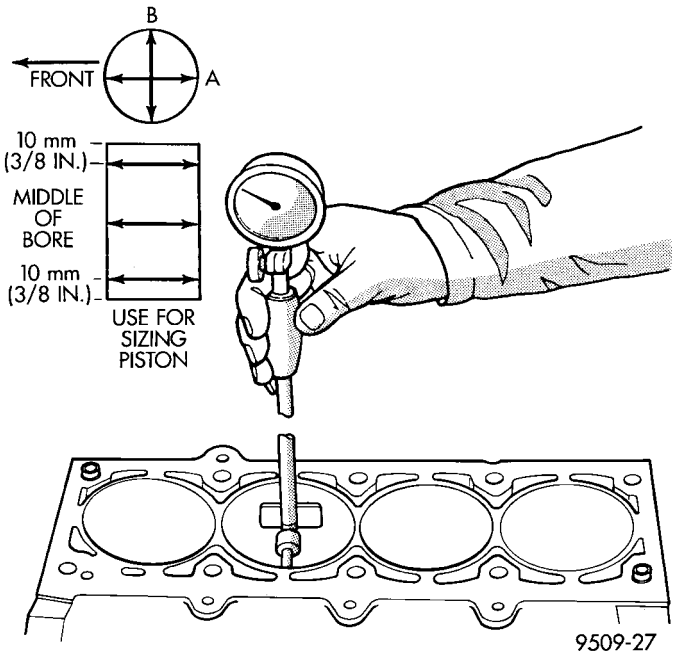

Fig. 70 Checking Cylinder Bore

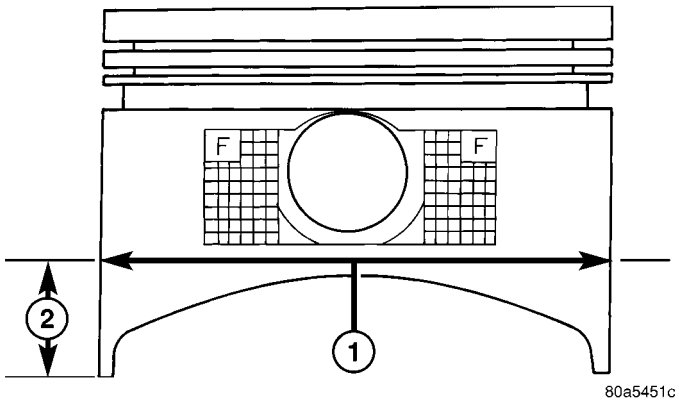

Fig. 71 Piston Measurement Location

1 - PISTON DIAMETER
2 - 14 mm (9/16 in.)

REMOVAL

(1) Remove top ridge of cylinder bores with a reliable ridge reamer before removing pistons from cylinder block. **Be sure to keep tops of pistons covered during this operation**.

CAUTION: DO NOT use a number stamp or a punch to mark connecting rods. Damage to connecting rod could occur.

(2) Using a permanent ink marker or scribe tool mark the cylinder number on the side of the rod and cap (Fig. 72) for identification.

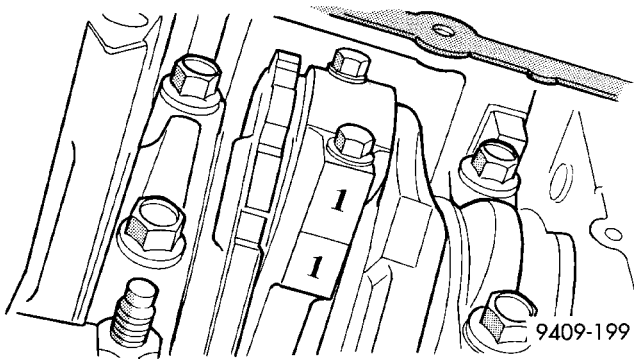

Fig. 72 Identify Connecting Rod to Cylinder

(3) Pistons and connecting rods must be removed from top of cylinder block. Rotate crankshaft so that each connecting rod is centered in cylinder bore.

(4) Remove connecting rod cap bolts **Do not use old bolts if reinstalling connecting rod.**

(5) To protect crankshaft journal and fractured rod surfaces, install Special Tool 8388, connecting rod guides onto connecting rod (Fig. 73). Carefully push each piston and rod assembly out of cylinder bore.

CAUTION: Care must be taken not to damage the fractured rod and cap joint surfaces, as engine damage many occur.

(6) Remove Special Tool 8388, connecting rod guides and re-install bearing cap on the mating rod.

NOTE: Piston and rods are serviced as an assembly.

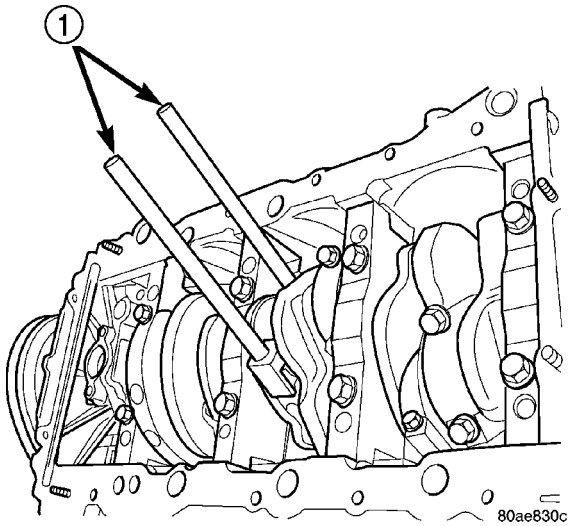

Fig. 73 Connecting Rod Guides—Typical

1 - SPECIAL TOOL 8388 CONNECTING ROD GUIDES

PISTON & CONNECTING ROD (Continued)

INSTALLATION

(1) Install piston rings on piston (Refer to 9 - ENGINE/ENGINE BLOCK/PISTON RINGS - INSTALLATION).

(2) Rotate crankshaft so that the connecting rod journal is on the center of the cylinder bore. Lubricate connecting rod journal with clean engine oil.

(3) Install connecting rod bearing half onto connecting rod.

(4) Install Special Tool 8388 connecting rod guides onto connecting rod (Fig. 74).

(5) Before installing pistons and connecting rod assemblies into the bore, ensure the compression ring gaps are staggered, and neither is in line with the oil ring rail gap. Ensure the oil ring expander ends are butted and the rail gaps are staggered.

(6) Immerse the piston head and rings in clean engine oil, slide the ring compressor over the piston. **Be sure position of rings does not change during this operation**.

(7) Compress piston rings.

(8) Install piston into cylinder making sure marks on piston face toward front of engine (Fig. 74).

(9) Tap the piston down in cylinder bore, using a hammer handle. At the same time, guide connecting rod into position on connecting rod journal.

(10) Remove Special Tool 8388, connecting rod guides.

(11) Install connecting rod lower bearing half and cap. Install **New** bolts and tighten to 26 N·m (19 ft. lbs.) plus 1/4 turn.

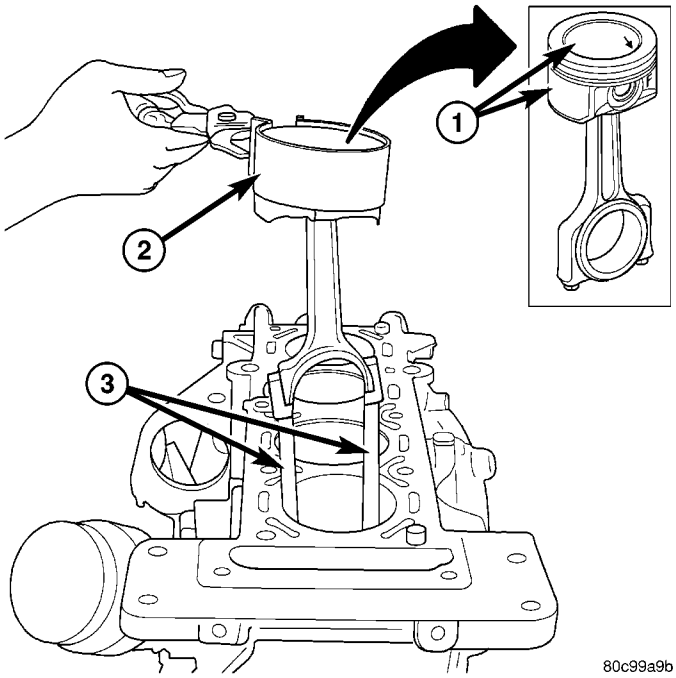

Fig. 74 Piston/Connecting Rod Installation

1 - MARKINGS ON PISTON FACE FRONT OF ENGINE
2 - RING COMPRESSOR
3 - SPECIAL TOOL 8388 CONNECTING ROD GUIDES

PISTON RINGS

STANDARD PROCEDURE - PISTON RING - FITTING

(1) Wipe cylinder bore clean. Insert ring and push down with piston to ensure it is square in bore. The ring gap measurement must be made with the ring positioned below normal ring travel in the cylinder bore. Check gap with feeler gauge (Fig. 75). For piston ring specifications (Refer to 9 - ENGINE - SPECIFICATIONS).

(2) Check piston ring to groove side clearance (Fig. 76). For piston ring specifications (Refer to 9 - ENGINE - SPECIFICATIONS).

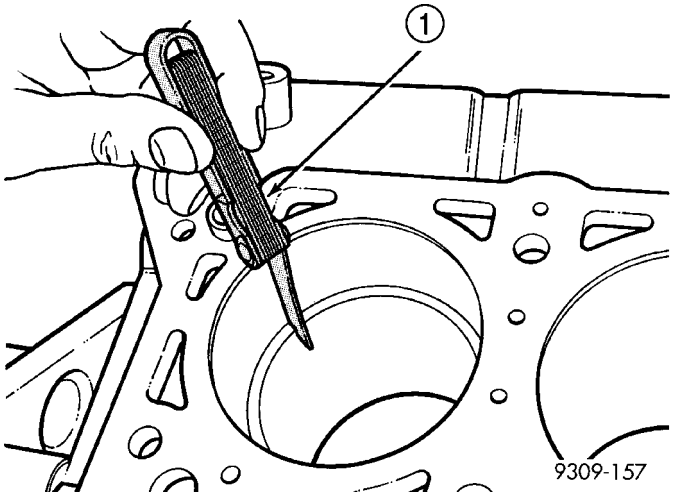

Fig. 75 Piston Ring Gap

1 - FEELER GAUGE

PISTON RINGS (Continued)

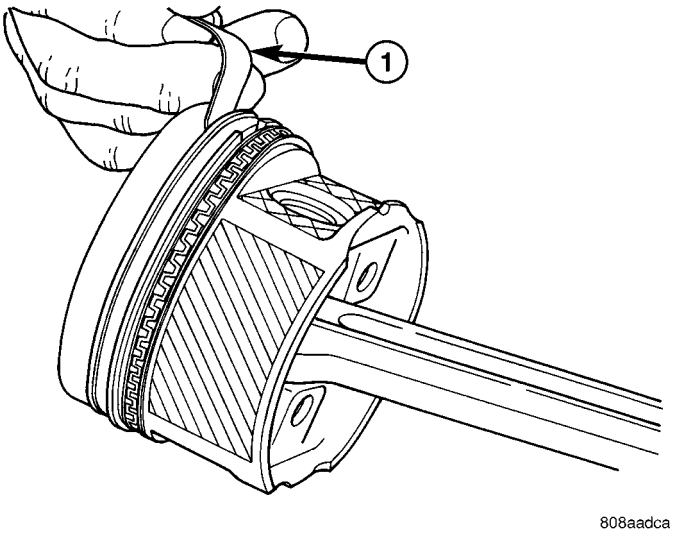

Fig. 76 Piston Ring Side Clearance

1 - FEELER GAUGE

REMOVAL

(1) Using a suitable ring expander, remove upper and intermediate piston rings (Fig. 77).

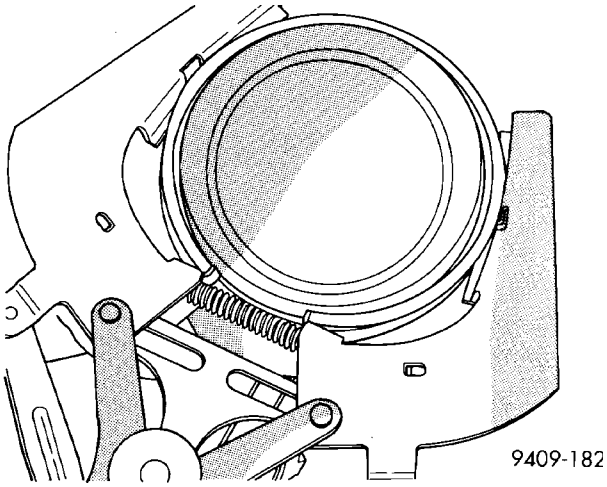

Fig. 77 Piston Rings—Removing and Installing

(2) Remove the upper oil ring side rail, lower oil ring side rail and then oil ring expander from piston.

(3) Clean ring grooves of any carbon deposits.

INSTALLATION

Install rings with manufacturers identification mark facing up, to the top of the piston (Fig. 78).

CAUTION: Install piston rings in the following order:

- Oil ring expander.
- Upper oil ring side rail.
- Lower oil ring side rail.
- No. 2 Intermediate piston ring.

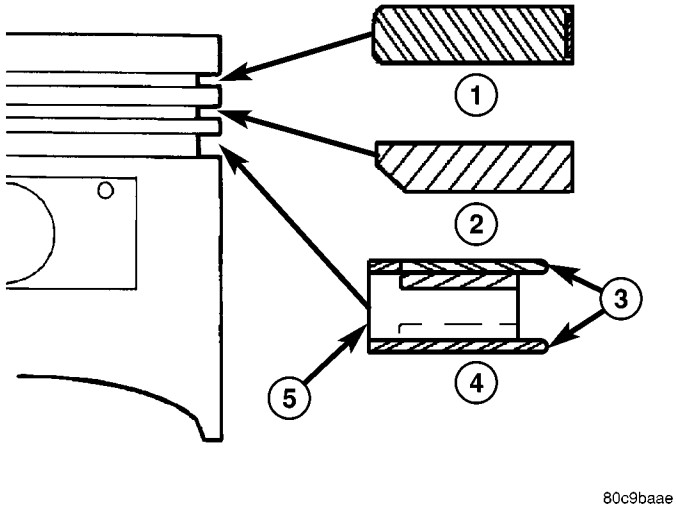

Fig. 78 Piston Ring Installation

1 - NO. 1 PISTON RING
2 - NO. 2 PISTON RING
3 - SIDE RAIL
4 - OIL RING
5 - OIL RING EXPANDER

- No. 1 Upper piston ring.

(1) Install oil ring expander (Fig. 78).

(2) Install upper side rail first and then the lower side rail. Install the side rails by placing one end between the piston ring groove and the oil ring expander. Hold end firmly and press down the portion to be installed until side rail is in position. **Do not use a piston ring expander (Fig. 79).**

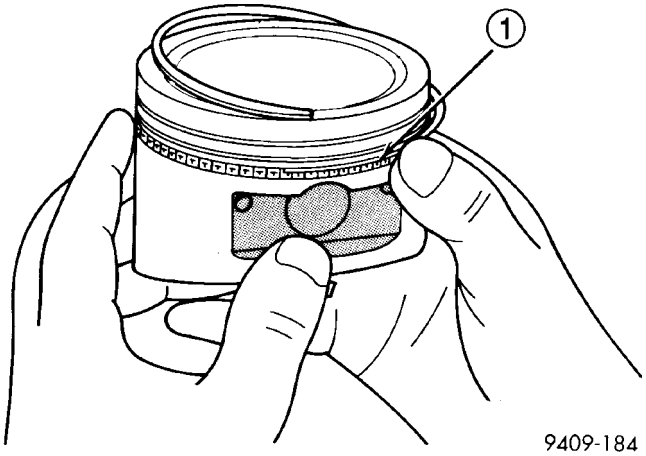

Fig. 79 Installing Side Rail

1 - SIDE RAIL END

(3) Install No. 2 piston ring and then No. 1 piston ring (Fig. 78).

(4) Position piston ring end gaps as shown in (Fig. 80).

PISTON RINGS (Continued)

(5) Position oil ring expander gap at least 45° from the side rail gaps but **not** on the piston pin center or on the thrust direction. Staggering ring gap is important for oil control.

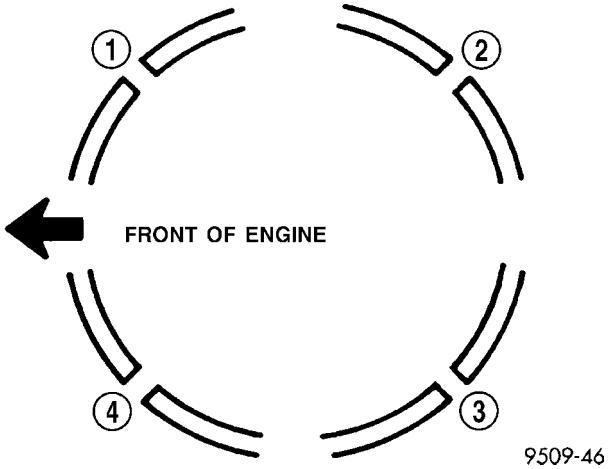

Fig. 80 Piston Ring End Gap Position

1 - GAP OF LOWER SIDE RAIL
2 - NO. 1 RING GAP
3 - GAP OF UPPER SIDE RAIL
4 - NO. 2 RING GAP AND SPACER EXPANDER GAP

VIBRATION DAMPER

REMOVAL

(1) Disconnect negative battery cable.
(2) Raise vehicle on hoist.
(3) Remove the right wheel and accessory drive belt splash shield.
(4) Remove accesory drive belt (Refer to 7 - COOLING/ACCESSORY DRIVE/DRIVE BELT - REMOVAL).
(5) Remove crankshaft vibration damper bolt. Remove damper using Special Tool 1026 puller and 6827A insert (Fig. 81).

INSTALLATION

(1) Install crankshaft vibration damper using Special Tool 8385 installer (Fig. 82).
(2) Install vibration damper bolt. Tighten bolt to 115 N·m (85 ft. lbs.).
(3) Install the accesory drive belt (Refer to 7 - COOLING/ACCESSORY DRIVE/DRIVE BELT - INSTALLATION).
(4) Install the accessory drive belt splash shield and right wheel.
(5) Lower the vehicle.
(6) Connect negative battery cable.

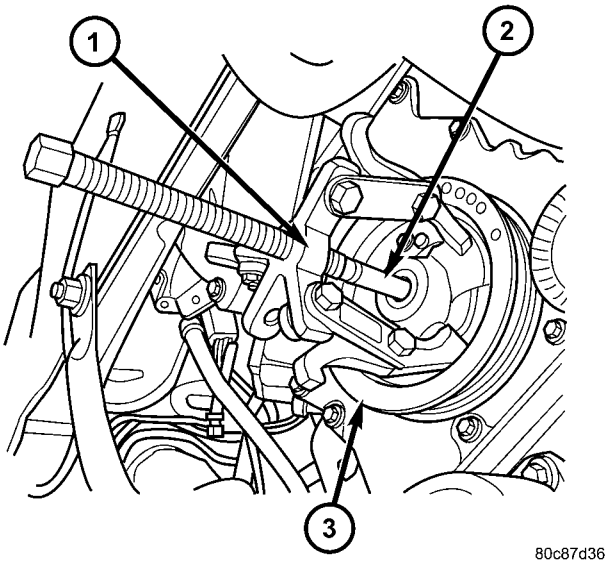

Fig. 81 Vibration Damper Removal

1 - SPECIAL TOOL 1026 PULLER
2 - SPECIAL TOOL 6827A INSERT
3 - VIBRATION DAMPER

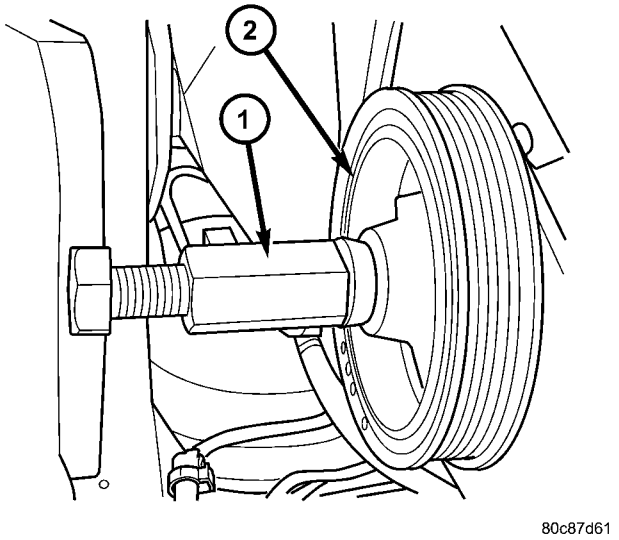

Fig. 82 Vibration Damper Installation

1 - SPECIAL TOOL 8385
2 - VIBRATION DAMPER

ENGINE MOUNTING

DESCRIPTION

The engine mounting system consists of a four-point system utilizing two load-carrying mounts and two torque struts. The load-carrying mounts are located on each frame rail. The right mount is a hydro-elastic mount and left mount is a conventional elastomeric isolator. The two torque controlling struts are attached at the front of the engine, straddling the

ENGINE MOUNTING (Continued)

right side load-carrying mount. The upper torque strut connects to the suspension strut tower and the lower torque strut connects to the suspension cross-member.

TORQUE STRUTS

REMOVAL

UPPER TORQUE STRUT

(1) Remove bolts attaching strut to shock tower bracket and engine mount bracket (Fig. 83).
(2) Remove the upper torque strut.

LOWER TORQUE STRUT

(1) Raise vehicle on hoist.
(2) Remove accessory drive belt splash shield.
(3) Remove pencil strut (Fig. 84).
(4) Remove bolts attaching lower strut to cross-member and strut bracket (Fig. 83) and (Fig. 84).
(5) Remove lower torque strut.

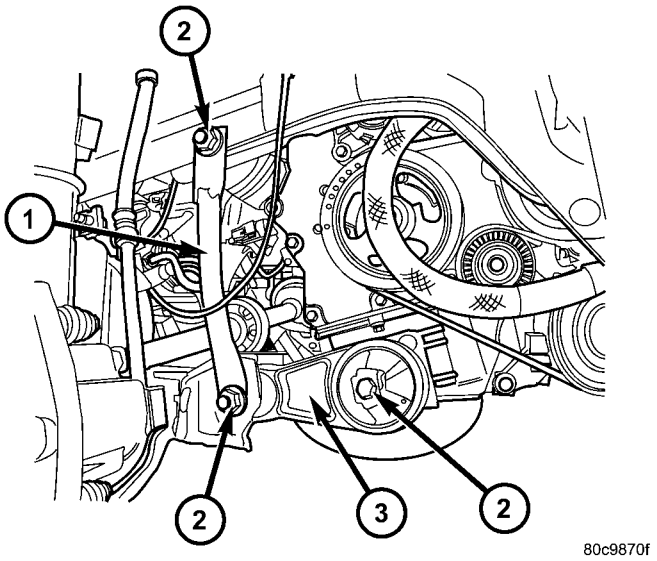

Fig. 84 Lower Torque Strut

1 - PENCIL STRUT
2 - TORQUE STRUT FASTENERS
3 - LOWER TORQUE STRUT

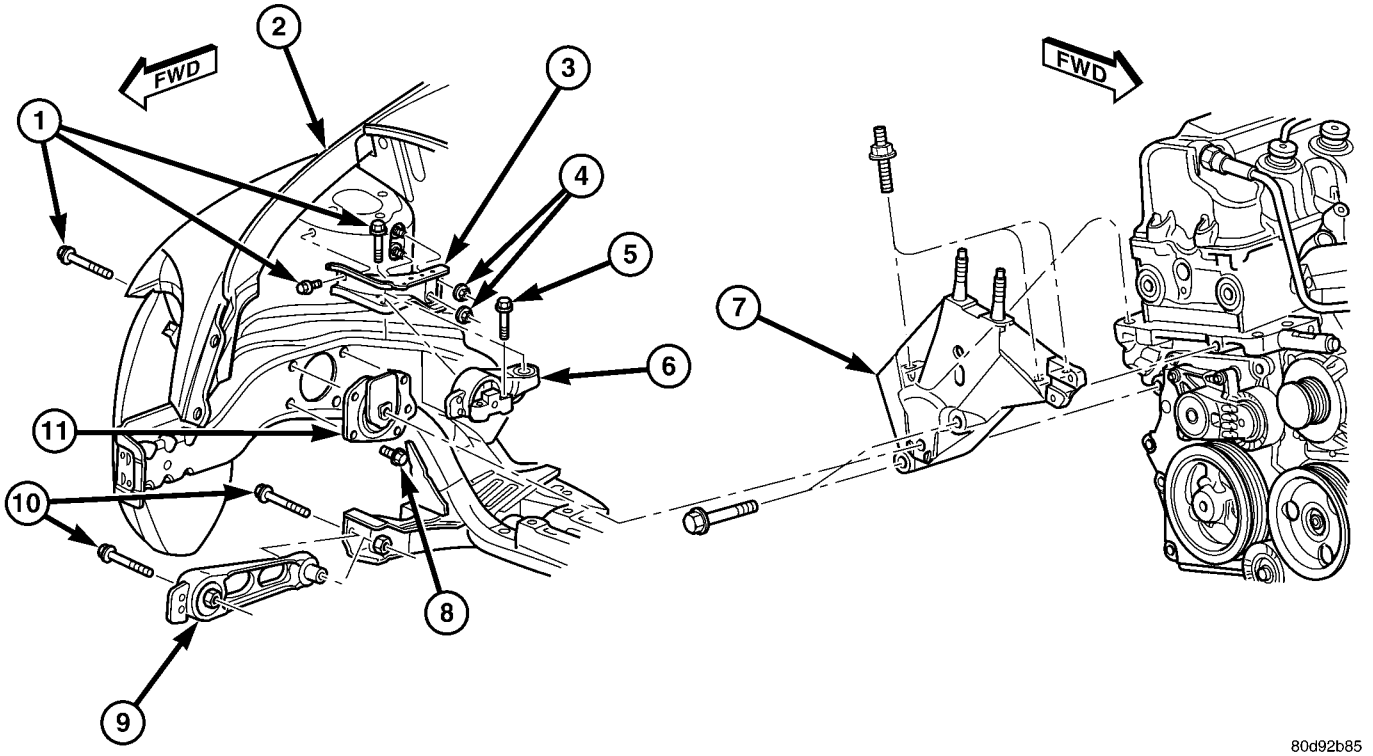

Fig. 83 Engine Mounting - Right Side

1 - BOLTS
2 - RIGHT FENDER
3 - UPPER TORQUE STRUT BRACKET
4 - NUTS
5 - BOLT
6 - UPPER TORQUE STRUT
7 - ENGINE MOUNT BRACKET
8 - BOLT
9 - LOWER TORQUE STRUT
10 - BOLT
11 - RIGHT ENGINE MOUNT

TORQUE STRUTS (Continued)

INSTALLATION

UPPER TORQUE STRUT

(1) Position the upper torque strut into mounting locations (Fig. 83).

(2) Install the mounting bolts.

(3) Perform torque strut adjustment procedure (Refer to 9 - ENGINE/ENGINE MOUNTING/ TORQUE STRUT - ADJUSTMENTS).

LOWER TORQUE STRUT

(1) Position lower torque strut into mounting locations (Fig. 83).

(2) Install mounting bolts.

(3) Install pencil strut (Fig. 84).

(4) Perform torque strut adjustment procedure (Refer to 9 - ENGINE/ENGINE MOUNTING/ TORQUE STRUT - ADJUSTMENTS).

(5) Install accessory drive belt splash shield.

(6) Lower vehicle.

ADJUSTMENTS

ADJUSTMENT

The upper and lower torque struts need to be adjusted together to assure proper engine positioning and engine mount loading. Whenever a torque strut bolt(s) is loosened, this procedure must be performed.

(1) Loosen the upper and lower torque strut attaching bolt at the suspension crossmember and shock tower bracket.

(2) The engine position may now be adjusted by positioning a suitable floor jack on the forward edge of the transmission bell housing (Fig. 85).

NOTE: The floor jack must be positioned as shown in (Fig. 85) to prevent minimal upward lifting of the engine.

(3) With the engine supported, remove the upper and lower torque strut attachment bolt(s) at shock tower bracket and suspension crossmember (Fig. 83). Verify that the torque struts are free to move within the shock tower bracket and crossmember. Reinstall the torque strut bolt(s), but do not tighten.

(4) Carefully apply upward force, allowing the upper engine to rotate rearward until the distance between the center of the rearmost attaching stud on the engine mount bracket (point “A”) and the center of the hole for the washer hose clip on the shock tower bracket (point “B”) is 119 mm (4.70 in.) (Fig. 86).

(5) With the engine held at the proper position, tighten both the upper and lower torque strut bolts to 118 N·m (87 ft. lbs.) (Fig. 83).

(6) Remove the floor jack.

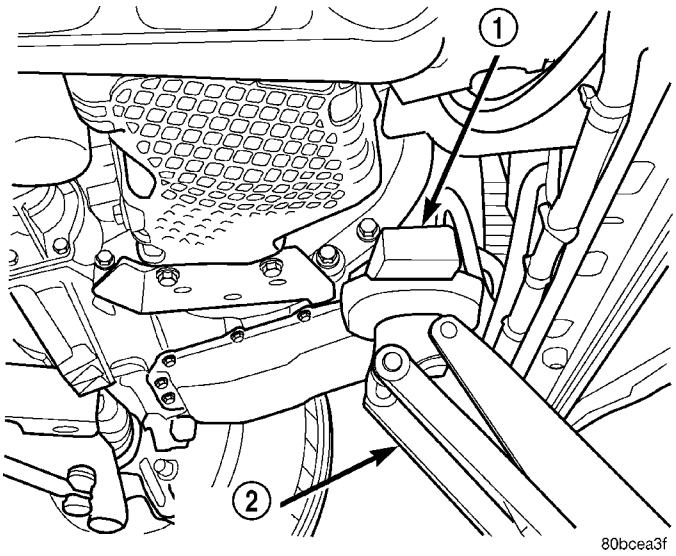

Fig. 85 Floor Jack Positioning

1 - WOOD BLOCK
2 - FLOOR JACK

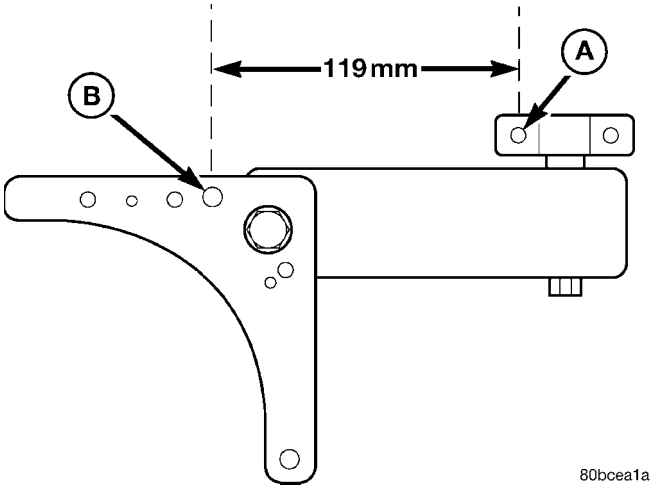

Fig. 86 Engine Position Measurement

RIGHT ENGINE MOUNT BRACKET

REMOVAL

(1) Remove upper torque strut (Refer to 9 - ENGINE/ENGINE MOUNTING/TORQUE STRUT - REMOVAL).

(2) Remove fasteners securing power steering reservoir bracket to right engine mount bracket.

(3) Remove fastener securing power steering return line to right engine mount bracket.

(4) Raise vehicle on hoist.

(5) Remove right front wheel.

(6) Remove accessory drive belt splash shield.

RIGHT ENGINE MOUNT BRACKET (Continued)

(7) Remove lower torque strut (Refer to 9 - ENGINE/ENGINE MOUNTING/TORQUE STRUT - REMOVAL).

(8) Remove lower right engine mount bracket bolt.

(9) Lower vehicle.

(10) Support engine with floor jack and wooden block on oil pan.

(11) Remove access cover in right frame rail for right engine mount through bolt.

(12) Remove right engine mount through bolt.

(13) Raise engine with floor jack.

(14) Remove remaining bolts and studs for right engine mount bracket. Remove bracket (Fig. 87).

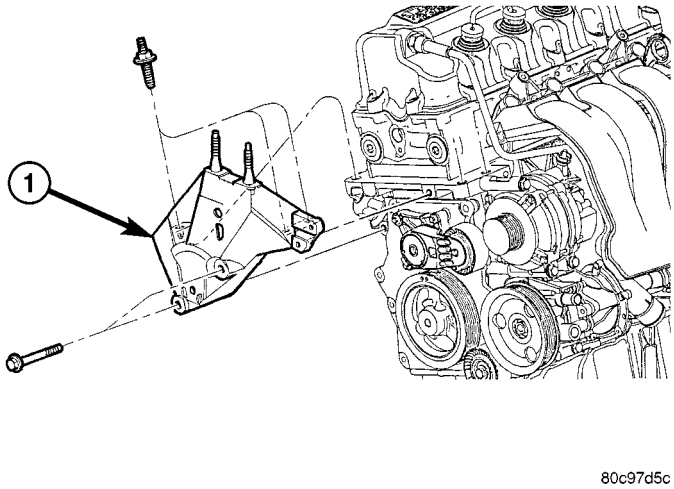

Fig. 87 Right Engine Mount Bracket

1 - RIGHT ENGINE MOUNT BRACKET

INSTALLATION

(1) Install right engine mount bracket. Hand start all fasteners. Torque M10 bolts to 68 N·m (50 ft. lbs.). Torque M12 studs to 118 N·m (87 ft. lbs.) (Fig. 87).

(2) Lower engine enough to install right engine mount through bolt.

(3) Install right engine mount through bolt. Torque bolt to 118 N·m (87 ft. lbs.).

(4) Install access cover in right side frame rail.

(5) Remove floor jack and wooden.

(6) Raise vehicle on hoist.

(7) Install lower torque strut (Refer to 9 - ENGINE/ENGINE MOUNTING/TORQUE STRUT - INSTALLATION).

(8) Install accessory drive belt splash shield.

(9) Install right front wheel.

(10) Lower vehicle.

(11) Install fastener securing power steering return line to right engine mount bracket.

(12) Install fasteners securing power steering reservoir bracket to right engine mount bracket.

(13) Install upper torque strut (Refer to 9 - ENGINE/ENGINE MOUNTING/TORQUE STRUT - INSTALLATION).

RIGHT MOUNT

REMOVAL

(1) Remove right engine mount bracket (Refer to 9 - ENGINE/ENGINE MOUNTING/ENGINE MOUNT BRACKET - REMOVAL).

NOTE: The right engine mount attaching holes are slightly oversize to compensate for manufacturing tolerances. The mount has been set at the manufacturing plant for proper powertrain alignment. Therefore, it is necessary to mark the position of the mount before the attaching bolts are loosened.

(2) Using a permanent ink marker or equivalent, mark the position of engine mount to the body frame rail.

(3) Remove bolts attaching mount to body (Fig. 88).

(4) Remove mount between engine and body frame rail.

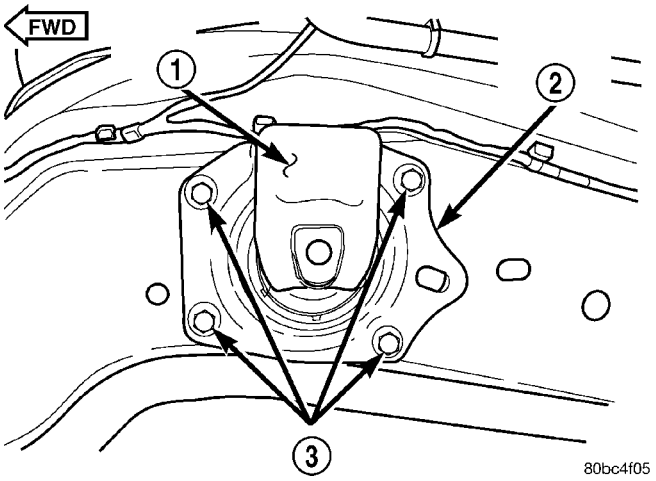

Fig. 88 Engine Mount—Right

1 - SNUBBER PAD
2 - RIGHT ENGINE MOUNT
3 - BOLTS

INSTALLATION

(1) Position the mount into the original position on body frame rail (Fig. 88).

NOTE: Engine mount must be installed in the original position on body frame rail. If mount was not marked or frame rail was replaced, perform the following procedure.

RIGHT MOUNT (Continued)

(2) Perform the following procedure if mount position was not previously marked or the frame rail was replaced:

- Insert the new mount loosely in frame rail.
- Align the four holes in the mount with the mating holes in the rail such that the holes are concentric (frame rail holes centered in the mount holes).
- Using a permanent ink marker or equivalent, mark the position of engine mount to the body frame rail while maintaining mounting hole concentricity.

(3) Ensure the mount maintains originally marked position and install mount bolts. Tighten bolts to 28 N·m (250 in. lbs.) (Fig. 88).

(4) Install right engine mount bracket (Refer to 9 - ENGINE/ENGINE MOUNTING/ENGINE MOUNT BRACKET - INSTALLATION).

(5) Remove the support from under engine.

LEFT MOUNT

REMOVAL

(1) Remove air cleaner assembly.

(2) Disconnect negative cable from battery.

(3) Remove bolts attaching the power distribution center (PDC) bracket to left mount and battery tray (Fig. 89).

(4) Support transaxle with a suitable jack.

(5) Remove mount to transaxle bolts (Fig. 90).

(6) Remove left mount bracket to body frame rail fasteners (Fig. 90).

(7) Remove mount.

INSTALLATION

(1) Install engine mount bracket to body frame rail and tighten fasteners to 28 N·m (250 in. lbs.) (Fig. 90).

(2) Position engine/transaxle for installation of mount to transaxle bolts. Install and tighten bolts to 68 N·m (50 ft. lbs.) (Fig. 90).

(3) Remove jack from under transaxle.

(4) Install bolts attaching the power distribution center (PDC) bracket to left mount and battery tray (Fig. 89).

(5) Connect negative cable to battery.

(6) Install air cleaner assembly.

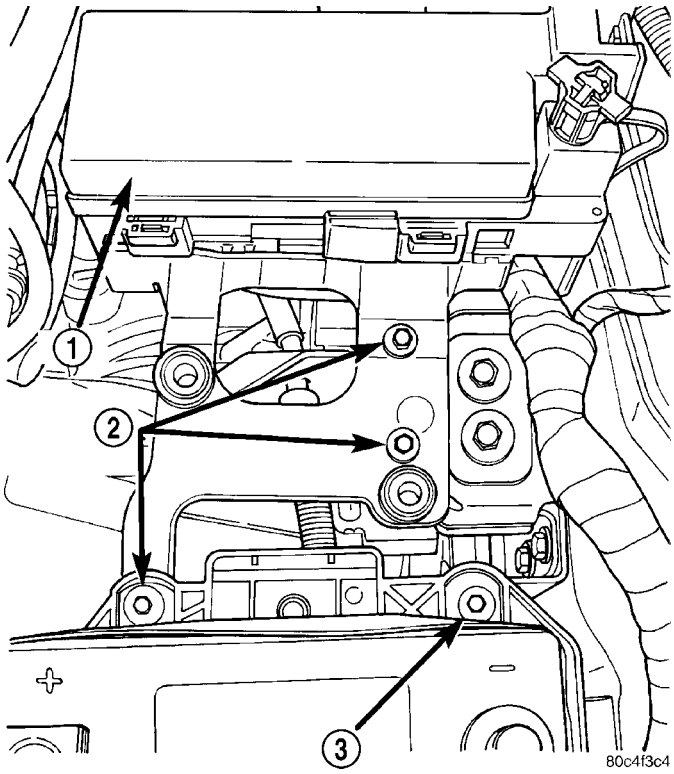

Fig. 89 PDC Bracket Attaching Bolts

1 - PDC
2 - PDC BRACKET BOLTS
3 - BATTERY TRAY BOLT

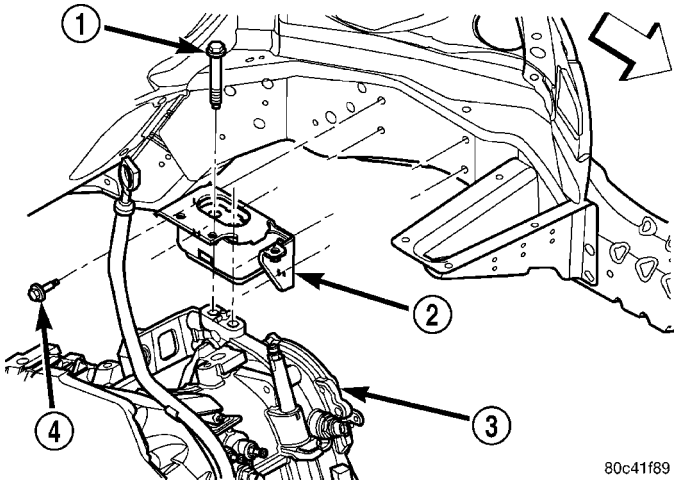

Fig. 90 Left Mount

1 - BOLT
2 - LEFT MOUNT
3 - TRANSAXLE
4 - BOLT

LUBRICATION

DESCRIPTION

The lubrication system is a full-flow filtration, pressure feed type. The oil pump is incorporated into the timing chain cover and driven by the crankshaft. Oil pressure is controlled by a relief valve mounted inside the oil pump housing (Fig. 91).

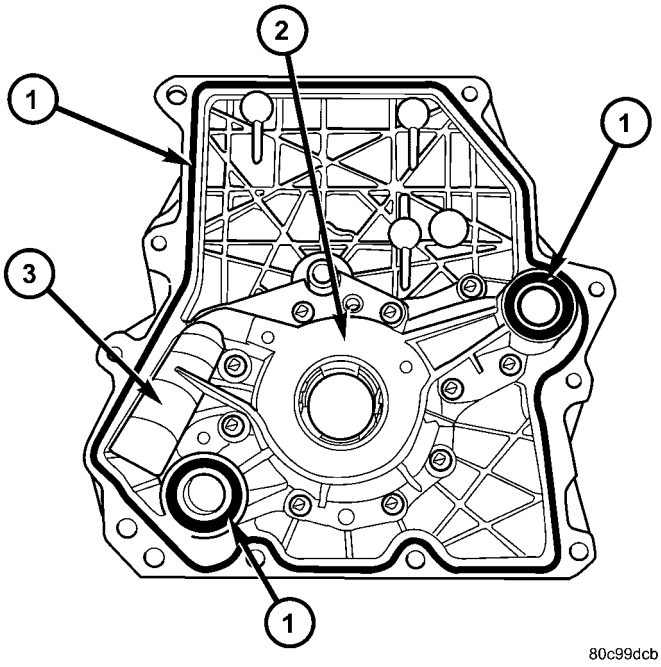

Fig. 91 Oil Pump

1 - TIMING CHAIN COVER SEALS
2 - OIL PUMP
3 - PRESSURE RELIEF VALVE

OPERATION

Engine oil is drawn up through the pickup tube and is pressurized by the oil pump and routed through the oil filter to the main oil gallery running the length of the cylinder block. A diagonal hole in each bulkhead feeds oil to each main bearing. Drilled passages within the crankshaft route oil from the main bearing journals to the connecting rod journals. The main oil gallery also feeds oil pressure to the timing chain tensioner. A vertical hole at the number three main bearing area routes pressurized oil through a restrictor up into the cylinder head. The restrictor that is integral to the cylinder head gasket, provides increased oil flow to the main gallery. Upper engine lubrication is provided by one main feed to the number three camshaft bearing cap. Oil is then routed through the rocker shafts to the remaining camshaft bearing caps and rocker arms/hydraulic lash adjusters. Oil returning to the oil pan from the pressurized components supplies lubrication to the valve stems. The cylinder bores and wrist pins are splash lubricated from directed slots on the connecting rod thrust collar (Fig. 92).

DIAGNOSIS AND TESTING - CHECKING ENGINE OIL PRESSURE

Check oil pressure using a gauge at oil pressure switch location.

(1) Remove pressure sending unit. The pressure sending unit is located on the oil filter cartridge housing (Fig. 93).

(2) Install oil pressure test gauge, Special Tool C-3292 with Adapter 8406. For Special Tool identification, (Refer to 9 - ENGINE - SPECIAL TOOLS).

CAUTION: If oil pressure is 0 at idle, Do Not Run engine at 3000 RPM.

(3) Warm engine to normal operating temperature.

(4) Monitor gauge readings at idle and 3000 rpm. For specifications (Refer to 9 - ENGINE - SPECIFICATIONS).

LUBRICATION (Continued)

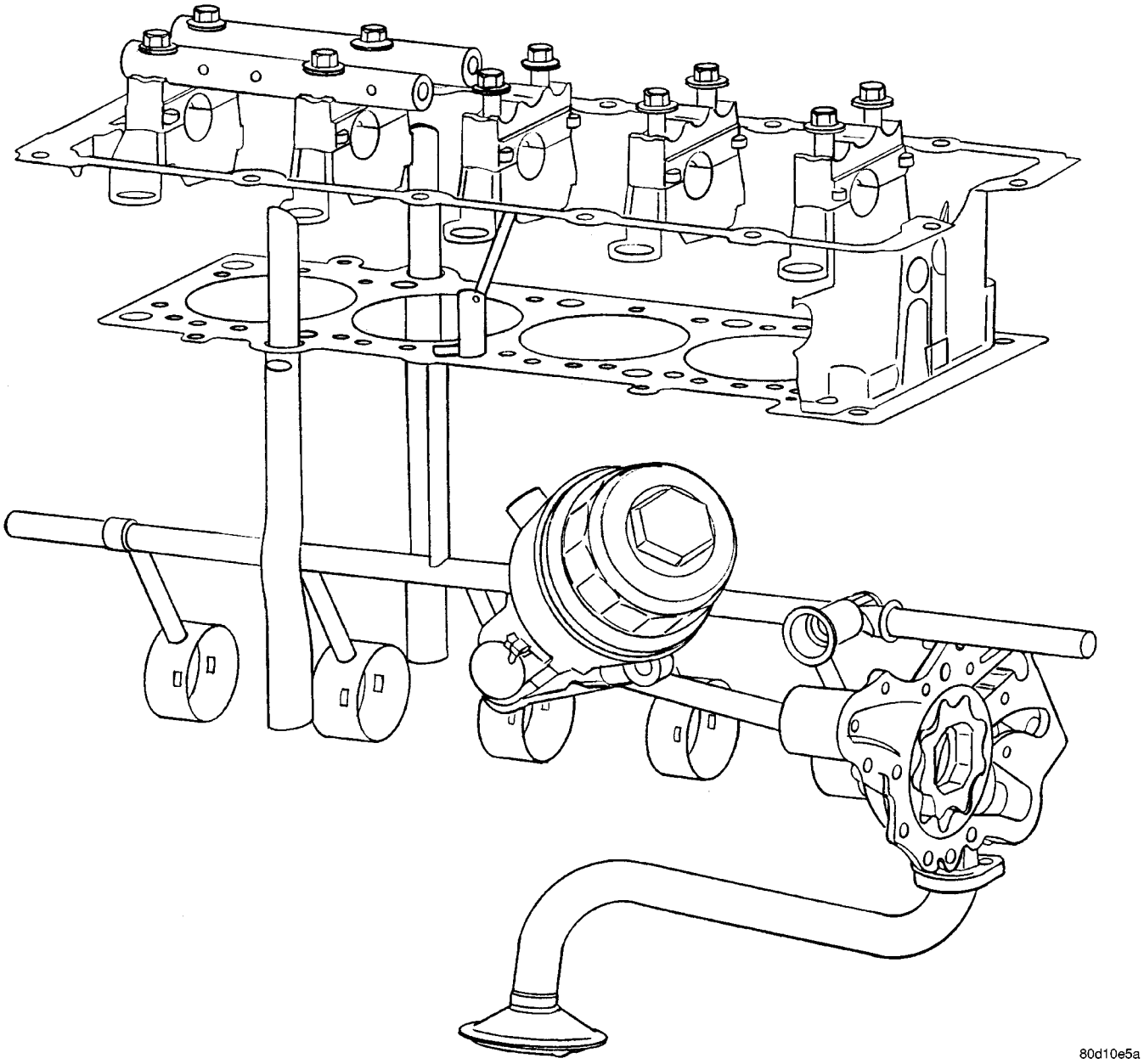

Fig. 92 Oil Lubrication System

LUBRICATION (Continued)

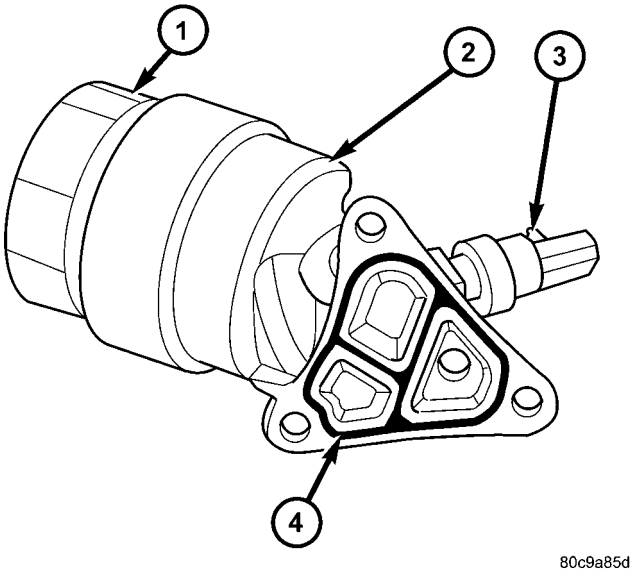

Fig. 93 Oil Filter Cartridge Housing

1 - OIL FILTER CAP
2 - OIL FILTER CARTRIDGE HOUSING
3 - OIL PRESSURE SWITCH
4 - SEAL

OIL FILTER CARTRIDGE

REMOVAL

(1) Turn oil filter cap counterclockwise 2 ½ turns and wait one minute (Fig. 94).

NOTE: A drain back valve incorporated into the oil filter cartridge housing allows oil to drain back into the crankcase as the oil filter cartridge is removed (Fig. 94).

(2) Continue turning the oil filter cap counterclockwise. Remove cap slowly to avoid spill of oil.

(3) Remove oil filter cartridge from the cap (Fig. 94).

NOTE: If the center tube (Fig. 94) separates from the cap and stays inside the filter cartridge, you must remove the center tube from the filter element and snap it back onto the cap with the spring.

(4) Remove and discard o-ring from cap.

INSTALLATION

(1) Install new o-ring on cap (Fig. 94).

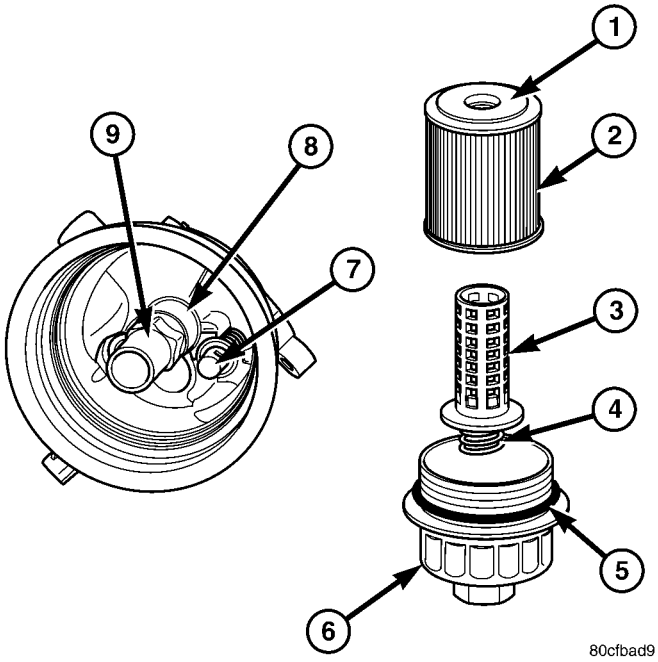

Fig. 94 Oil Filter Cartridge

1 - GROMMET
2 - OIL FILTER CARTRIDGE
3 - CENTER TUBE
4 - SPRING
5 - O-RING
6 - CAP
7 - DRAIN BACK VALVE
8 - CENTER POST
9 - STANDPIPE

(2) Install new oil filter cartridge over center tube of cap (Fig. 94).

NOTE: Before installation, make sure no grommet is left on the center post of the oil filter housing from the previous filter (Fig. 94).

(3) Align the grommet hole of the oil filter cartridge with the center post of the filter housing.

(4) Press in and turn oil filter cap clockwise. Tighten cap to 25 N·m (18 ft. lbs). Cap flange should sit tightly on the housing flange.

(5) Fill oil to proper level.

(6) Start engine. Check for leaks.

OIL FILTER CARTRIDGE HOUSING

DESCRIPTION

The oil filter cartridge housing is attached to the right side of the engine utilizing a seal between the housing and engine block. The housing contains an oil filter cartridge that cleans the engine oil coming from the oil pump prior to it entering the main engine oil gallery. The oil pressure switch is used to provide the driver with engine oil pressure information (Fig. 95).

Other components of the oil filter cartridge housing (Fig. 95):

- By-Pass Valve: If the oil filter cartridge becomes plugged, this valve opens allowing unfiltered oil to enter the main engine oil gallery.
- Inlet Check Valve: This valve opens when engine oil pressure pushes against it. After the engine is shut off, the valve closes allowing oil to remain in the oil filter cartridge housing.
- Drainback Valve: With the oil filter cartridge installed, this valve is closed. As the oil filter cap and oil filter cartridge are removed, the valve opens allowing the reserve of oil in the cartridge housing to drain back into the engine oil pan.

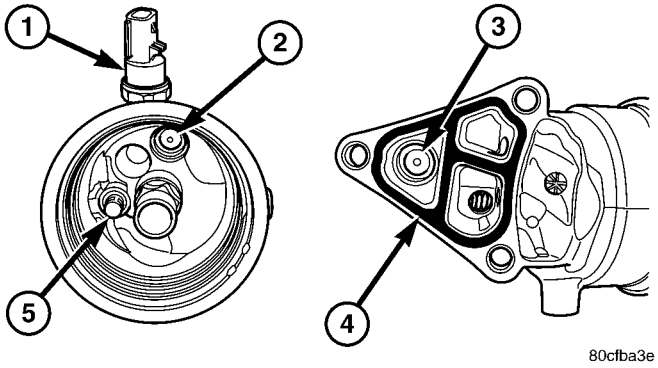

Fig. 95 Oil Filter Cartridge Housing

1 - OIL PRESSURE SWITCH
2 - BY-PASS VALVE
3 - INLET CHECK VALVE
4 - SEAL
5 - DRAINBACK VALVE

REMOVAL

(1) Raise vehicle on hoist.

(2) Disconnect oil pressure switch electrical connector.

(3) Remove oil filter cartridge (Refer to 9 - ENGINE/LUBRICATION/OIL FILTER CARTRIDGE - REMOVAL).

(4) Remove fasteners securing oil filter cartridge housing to engine block.

(5) Remove oil filter cartridge housing.

INSTALLATION

(1) Inspect and clean oil filter cartridge housing sealing surfaces.

(2) Replace oil filter cartridge housing seal (Fig. 96)

(3) Install oil filter cartridge housing mounting fasteners. Torque fasteners to 28 N·m (250 in. lbs.).

(4) Install oil filter cartridge (Refer to 9 - ENGINE/LUBRICATION/OIL FILTER CARTRIDGE - INSTALLATION).

(5) Connect oil pressure switch electrical connector.

(6) Lower vehicle.

(7) Start engine. Check for leaks.

(8) Turn engine off. Check oil level. Fill oil to proper level.

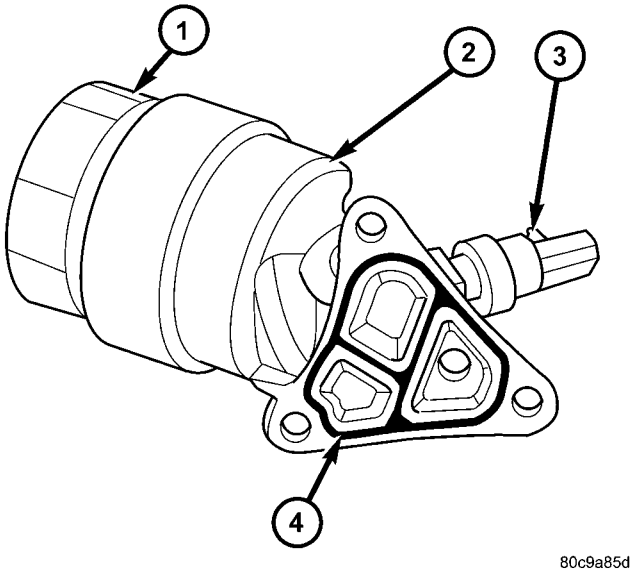

Fig. 96 Oil Filter Cartridge Housing

1 - OIL FILTER CAP
2 - OIL FILTER CARTRIDGE HOUSING
3 - OIL PRESSURE SWITCH
4 - SEAL

OIL PAN

REMOVAL

(1) Disconnect negative battery cable.

(2) Raise vehicle on hoist.

(3) Remove right front wheel.

(4) Remove accessory drive belt splash shield.

(5) Drain engine oil.

(6) Remove air conditioning compressor lower bracket (Fig. 97).

(7) Remove bolt attaching lower torque strut to oil pan bracket (Fig. 98).

(8) Remove clutch slave cylinder and reposition (Fig. 99).

(9) Remove oil pan fasteners.

(10) Remove oil pan.

OIL PAN (Continued)

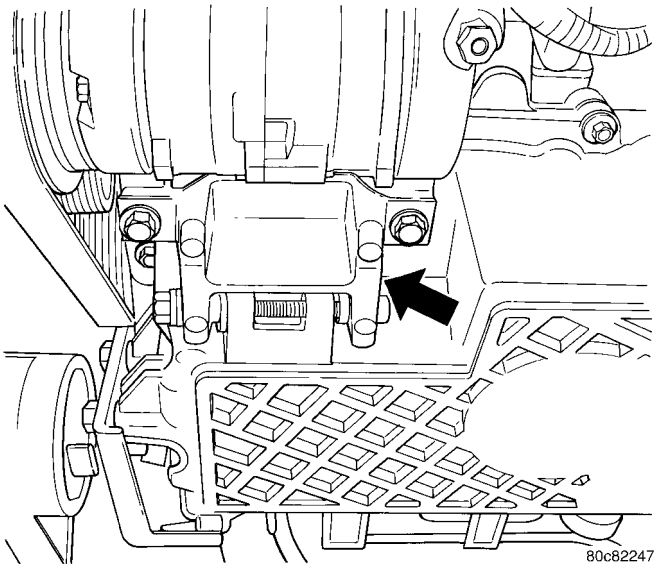

Fig. 97 Air Conditioning Compressor Lower Bracket

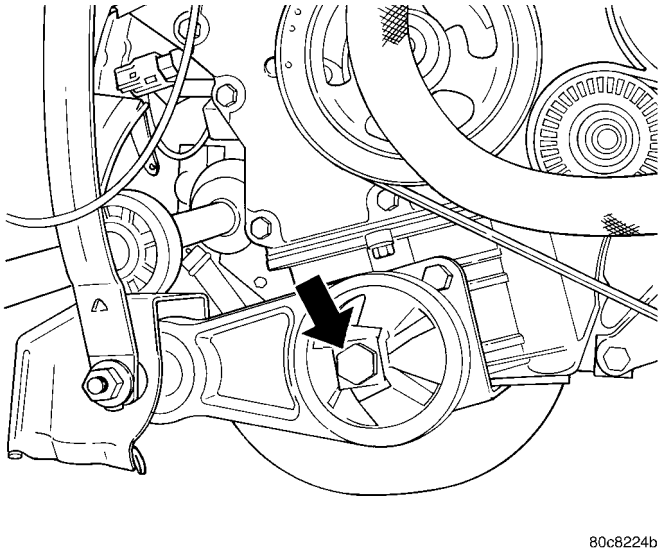

Fig. 98 Torque Strut Bracket

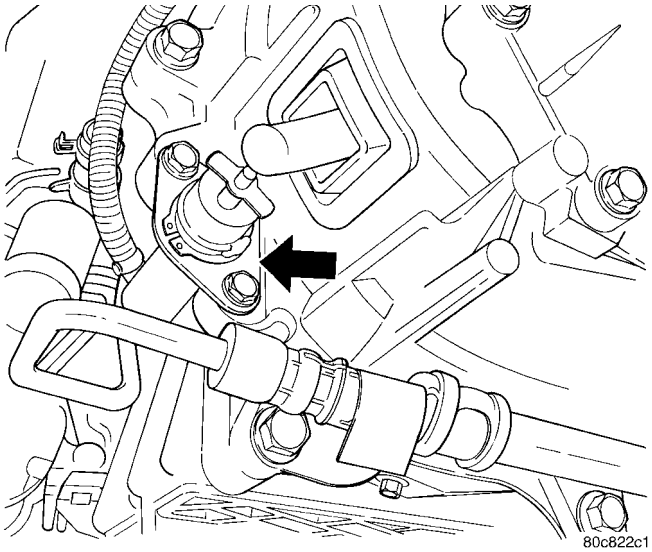

Fig. 99 Clutch Slave Cylinder

INSTALLATION

(1) Clean oil pan and all sealing surfaces.
(2) Position new oil pan gasket onto pan.
(3) Install oil pan (Fig. 100).

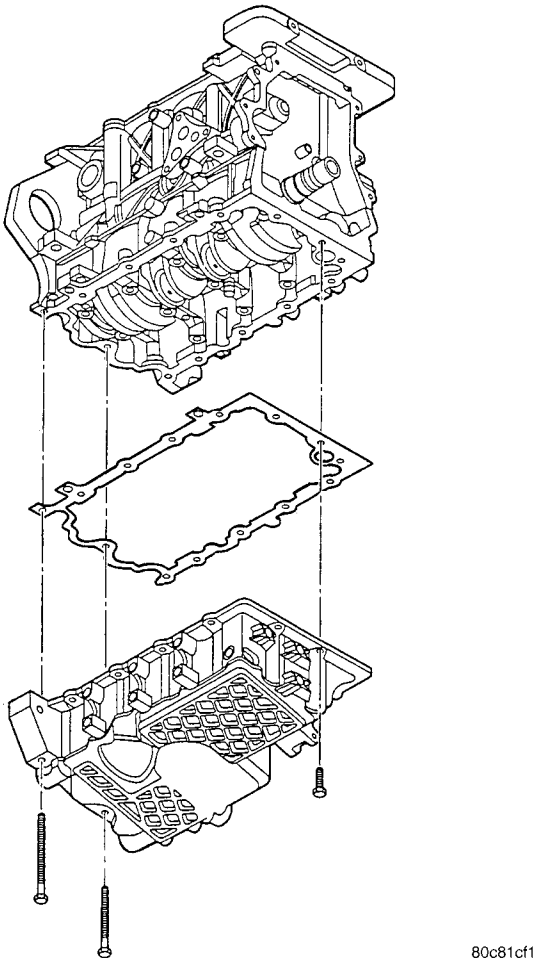

Fig. 100 Oil Pan and Gasket

(4) Install oil pan fasteners and tighten in sequence (Fig. 101). Torque bolts to 31 N·m (275 in. lbs.).
(5) Install the clutch slave cylinder (Fig. 99).
(6) Install air conditioning compressor lower bracket (Fig. 98).
(7) Install accessory drive belt splash shield.
(8) Install right front wheel.
(9) Lower vehicle.
(10) Fill engine crankcase with the proper oil to correct level. Refer to LUBRICATION AND MAINTENANCE for oil capacity and type.
(11) Connect negative battery cable.

OIL PAN (Continued)

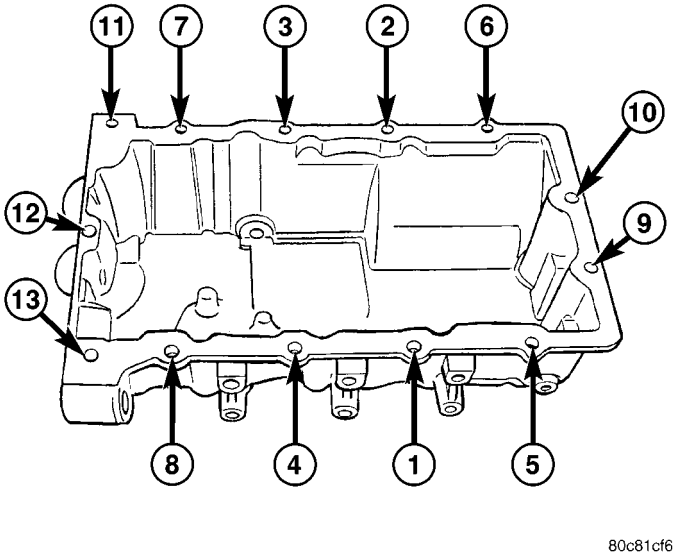

Fig. 101 Oil Pan Tightening Sequence

OIL PUMP

REMOVAL

(1) Remove timing chain cover (Refer to 9 - ENGINE/VALVE TIMING/TIMING CHAIN COVER - REMOVAL).

INSTALLATION

(1) Install timing chain cover (Refer to 9 - ENGINE/VALVE TIMING/TIMING CHAIN COVER - INSTALLATION).

OIL PUMP PICK-UP

REMOVAL

(1) Remove oil pan (Refer to 9 - ENGINE/LUBRICATION/OIL PAN - REMOVAL).

(2) Remove fasteners securing oil pump pick-up to engine block (Fig. 102).

(3) Remove oil pump pick-up.

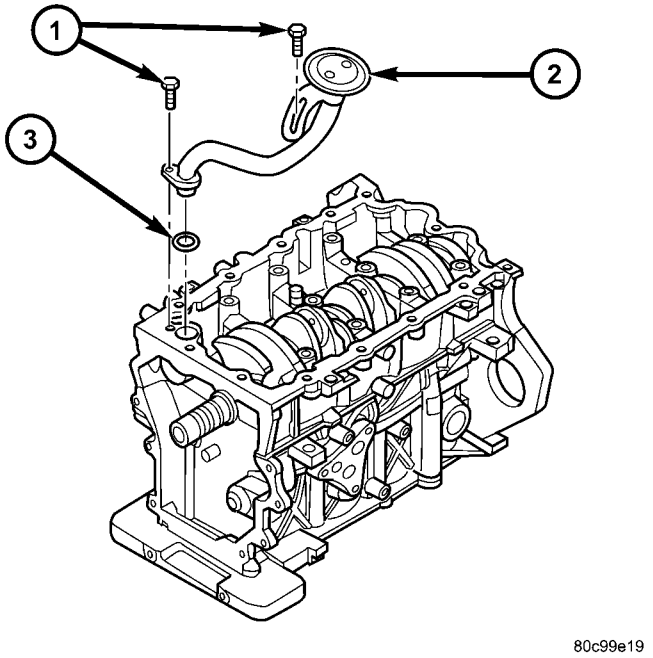

Fig. 102 Oil Pump Pick-up

1 - FASTENERS
2 - OIL PUMP PICK-UP
3 - O-RING

INSTALLATION

(1) Clean sealing surfaces.

(2) Replace o-ring (Fig. 102).

(3) Install oil pump pick-up. Torque fasteners to 12 N·m (105 in. lbs.).

(4) Install oil pan (Refer to 9 - ENGINE/LUBRICATION/OIL PAN - INSTALLATION).

INTAKE MANIFOLD

REMOVAL

REMOVAL - UPPER INTAKE MANIFOLD

(1) Disconnect negative battery cable.

(2) Disconnect throttle body air inlet hose and purge solenoid vacuum hose from throttle body (Fig. 103).

(3) Disconnect PCV hose from upper intake manifold (Fig. 103).

(4) Disconnect brake booster vacuum hose.

(5) Disconnect electronic throttle control motor electrical connector.

(6) Remove upper intake manifold support bracket fasteners (Fig. 103).

(7) Remove upper intake manifold fasteners (Fig. 103).

(8) Remove upper intake manifold and gasket.

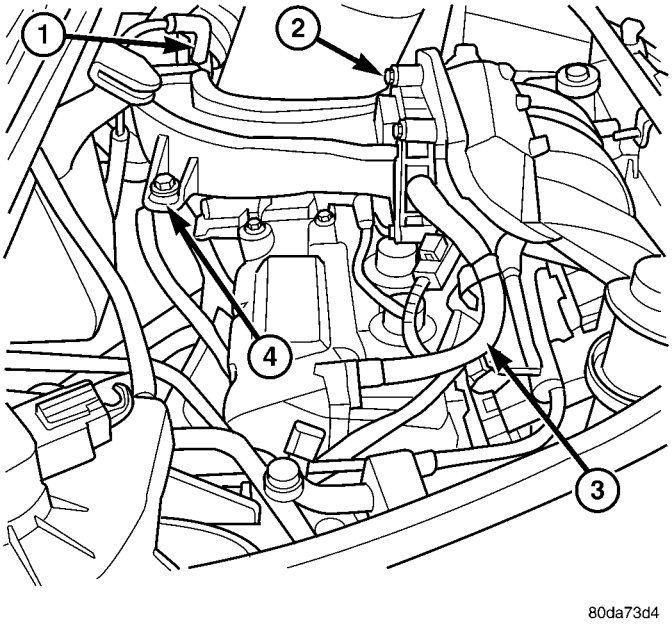

Fig. 103 Upper Intake Manifold

1 - PURGE SOLENOID VACUUM HOSE
2 - UPPER INTAKE FASTENERS
3 - PCV HOSE
4 - MANIFOLD SUPPORT BRACKET FASTENERS

REMOVAL - LOWER INTAKE MANIFOLD

(1) Perform fuel pressure release procedure (Refer to 14 - FUEL SYSTEM/FUEL DELIVERY - STANDARD PROCEDURE).

(2) Disconnect negative battery cable.

(3) Remove upper intake manifold (Refer to 9 - ENGINE/MANIFOLDS/INTAKE MANIFOLD - REMOVAL).

(4) Disconnect fuel line from fuel rail.

(5) Disconnect fuel injector electrical connectors.

(6) Remove fuel rail.

(7) Remove lower intake manifold mounting bolts.

(8) Remove lower intake manifold (Fig. 104).

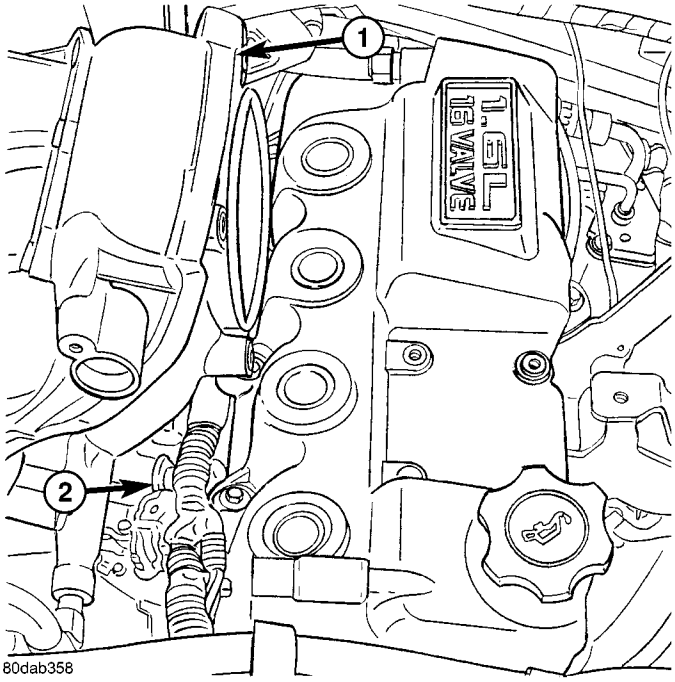

Fig. 104 LOWER INTAKE MANIFOLD

1 - LOWER INTAKE MANIFOLD
2 - LOWER INTAKE MOUNTING BOLTS

INSTALLATION

INSTALLATION - UPPER INTAKE MANIFOLD

(1) Position the upper intake manifold and gasket.

(2) Install upper intake manifold fasteners. Tighten to 12 N·m (105 in. lbs.).

(3) Install upper intake manifold support bracket fasteners (Fig. 103). Tighten M6 fasteners to 19 N·m (165 in. lbs.) and M8 fasteners to 28 N·m (250 in. lbs.).

(4) Connect PCV hose to upper intake manifold (Fig. 103).

(5) Connect brake booster vacuum hose.

(6) Connect electronic throttle control motor electrical connector.

(7) Connect throttle body air inlet hose and purge solenoid vacuum hose to throttle body (Fig. 103).

(8) Connect negative battery cable.

INSTALLATION - LOWER INTAKE MANIFOLD

(1) Clean manifold sealing surfaces.

(2) Inspect and replace intake manifold seals as necessary.

(3) Position lower intake manifold.

INTAKE MANIFOLD (Continued)

(4) Install lower intake manifold mounting bolts. Tighten bolts to 26 N·m (230 in. lbs.). (Fig. 104).

(5) Apply a light coating of clean engine oil to the O-ring on the nozzle end of each injector.

(6) Insert fuel injector nozzles into openings in lower intake manifold. Seat the injectors in place. Install fule rail fasteners. Tighten fuel rail mounting fasteners to 22.5 N·m ± 3 N·m (200±30 in. lbs.).

(7) Connect fuel injector electrical connectors.

(8) Connect fuel line to fuel rail.

(9) Install upper intake manifold (Refer to 9 - ENGINE/MANIFOLDS/INTAKE MANIFOLD - INSTALLATION).

(10) Connect negative battery cable.

EXHAUST MANIFOLD

REMOVAL

(1) Disconnect negative battery cable.

(2) Disconnect ignition coil and capacitor electrical connectors.

(3) Remove ignition coil and plug wires (Refer to 8 - ELECTRICAL/IGNITION CONTROL/IGNITION COIL - REMOVAL).

(4) Raise vehicle on hoist.

(5) Disconnect exhaust pipe from exhaust manifold.

(6) Remove starter heat shield bolt (Fig. 105).

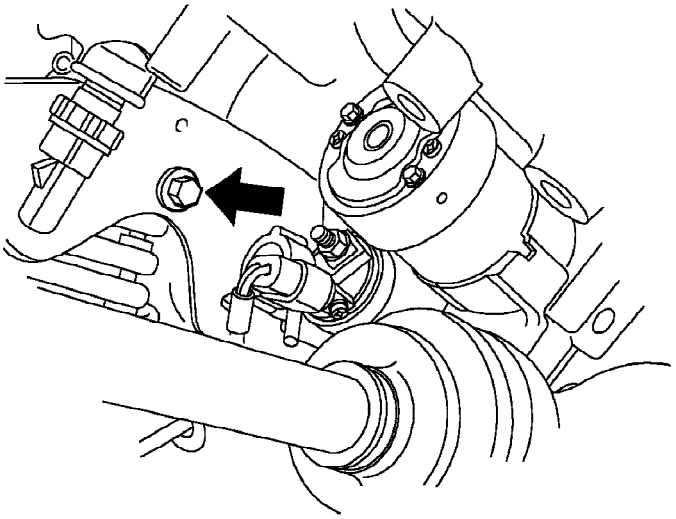

Fig. 105 Heat Shield Bolt

(7) Lower vehicle.

(8) Remove exhaust manifold upper heat shield bolts and remove heat shield.

(9) Remove exhaust manifold bolts and remove manifold.

CLEANING

(1) Discard gasket (if equipped) and clean all surfaces of manifold and cylinder head.

INSPECTION

(1) Inspect manifold gasket surfaces for flatness with straight edge. Surface must be flat within 0.15 mm per 300 mm (0.006 in. per foot) of manifold length.

(2) Inspect manifolds for cracks or distortion. Replace manifold as necessary.

INSTALLATION

(1) Clean gasket surfaces.

(2) Install exhaust manifold with a new gasket and install bolts to hold gasket in place (Fig. 106). The gasket has tabs in the bolt holes to retain the exhaust manifold bolts for installation purposes.

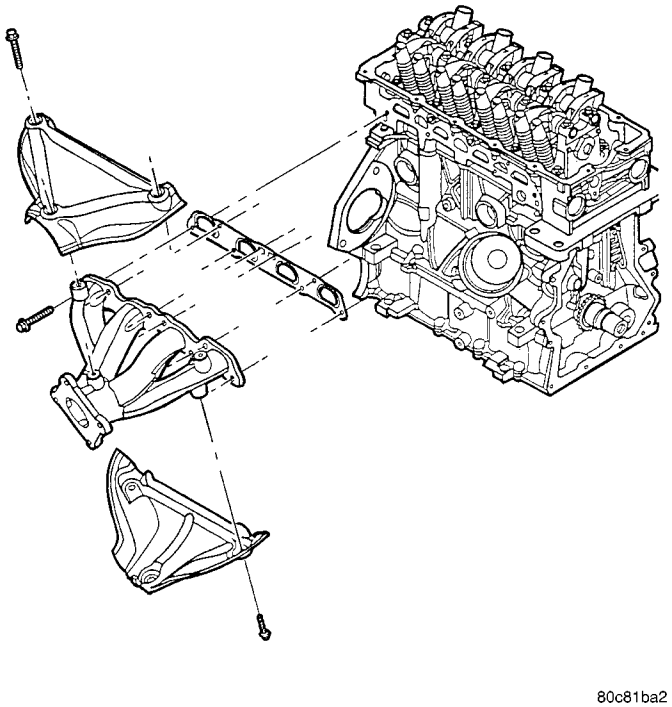

Fig. 106 Exhaust Manifold, Heat Shield, and Gasket

(3) Tighten the exhaust manifold bolts in a spiral pattern starting with the center bolts and working outward. Tighten bolts to 23 N·m (200 in. lbs.).

(4) Install exhaust manifold upper heat shield and tighten bolts to 28 N·m (250 in. lbs.).

(5) Raise vehicle vehicle on hoist.

(6) Install the starter heat shield bolt (Fig. 105).

(7) Install the exhaust pipe to the exhaust manifold. Tighten bolts to 28 N·m (250 in. lbs.).

(8) Lower vehicle.

EXHAUST MANIFOLD (Continued)

(9) Install ignition coil and spark plug cables (Refer to 8 - ELECTRICAL/IGNITION CONTROL/ IGNITION COIL - INSTALLATION).

(10) Connect ignition coil and capacitor electrical connector.

(11) Connect negative battery cable.

VALVE TIMING

DESCRIPTION

The timing drive system consists of the following (Fig. 107):

- Timing Chain
- Camshaft Sprocket
- Crankshaft Sprocket
- Right Timing Chain Guide (Movable)
- Left Timing Chain Guide (Fixed)
- Timing Chain Tensioner/Oil Reservoir Cap/Plug with Seal Ring

The camshaft sprocket is attached to the front of the camshaft and is used with the timing chain and crankshaft sprocket to turn the camshaft. The camshaft position sensor target is part of the sprocket and is used with the camshaft position sensor to provide the PCM with valvetrain position information.

The timing chain tensioner is installed in the right side of the engine block. Using engine oil pressure, the tensioner applies constant pressure to the right side (movable) timing chain guide, which in turn applies pressure to the timing chain. Also as the tensioner extends, it rachet locks in position to provide constant timing chain tension. An oil reservoir cap attaches to the timing chain tensioner to provide an available “pocket” of oil to the tensioner during initial start up.

STANDARD PROCEDURE - VALVE TIMING VERIFICATION

(1) Remove cylinder head cover (Refer to 9 - ENGINE/CYLINDER HEAD/CYLINDER HEAD COVER - REMOVAL).

(2) Remove number one spark plug.

(3) Using a dial indicator, set number one cylinder to TDC on the compression stroke.

(4) The mark on the camshaft sprocket should be in line with the cylinder head cover sealing surface (Fig. 108).

(5) Using a suitable light, look down into the timing chain cavity at the crankshaft sprocket. A paint mark on the crankshaft sprocket should align with the edge of the engine block boss indicated in (Fig. 109).

(6) Install cylinder head cover (Refer to 9 - ENGINE/CYLINDER HEAD/CYLINDER HEAD COVER(S) - INSTALLATION).

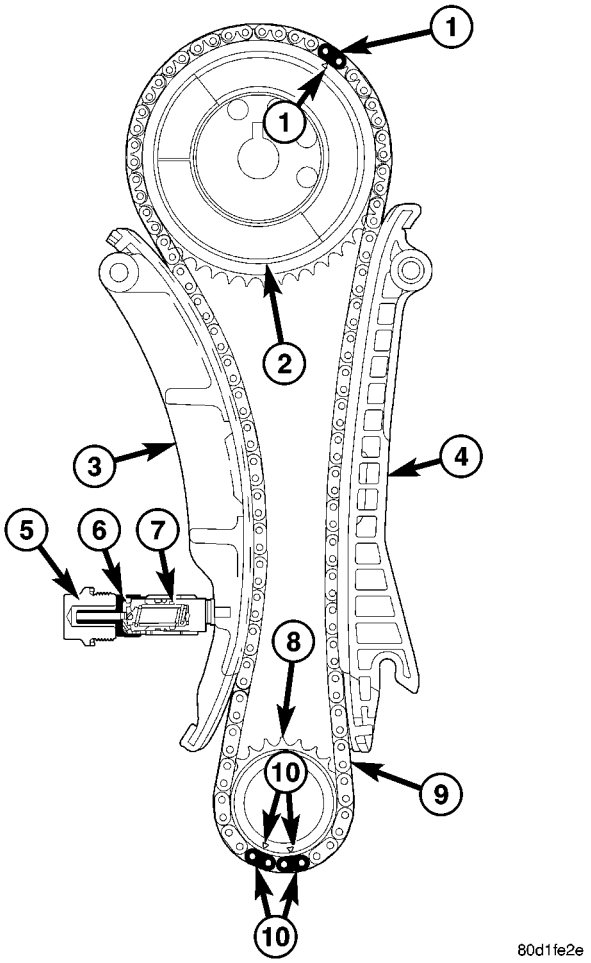

Fig. 107 Timing Drive System

1 - CAMSHAFT TIMING MARK ALIGNS WITH SINGLE PLATED/ DIMPLED LINK
2 - CAMSHAFT SPROCKET
3 - RIGHT TIMING CHAIN GUIDE (MOVABLE)
4 - LEFT TIMING CHAIN GUIDE (FIXED)
5 - PLUG WITH SEAL RING
6 - OIL RESERVOIR CAP
7 - TIMING CHAIN TENSIONER
8 - CRANKSHAFT SPROCKET
9 - TIMING CHAIN
10 - CRANKSHAFT TIMING MARKS ALIGN WITH DOUBLE PLATED/DIMPLED LINKS

TIMING CHAIN COVER

REMOVAL

(1) Disconnect and isolate the negative battery cable.

(2) Remove the power steering reservior bracket bolts (Refer to 19 - STEERING/PUMP/RESERVOIR - REMOVAL).

(3) Partialy drain the cooling system and disconnect the upper radiatior hose at the radiator.

(4) Remove the radiator cooling fan (Refer to 7 - COOLING/ENGINE/RADIATOR FAN - REMOVAL).

(5) Raise vehicle on hoist.

(6) Remove the right front wheel.

TIMING CHAIN COVER (Continued)

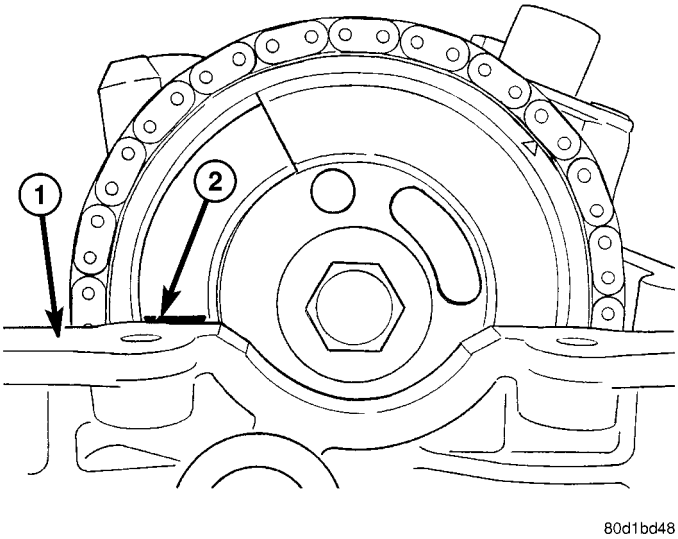

Fig. 108 Camshaft Timing Mark

1 - CYLINDER HEAD COVER SEALING SURFACE
2 - CAMSHAFT SPROCKET MARK

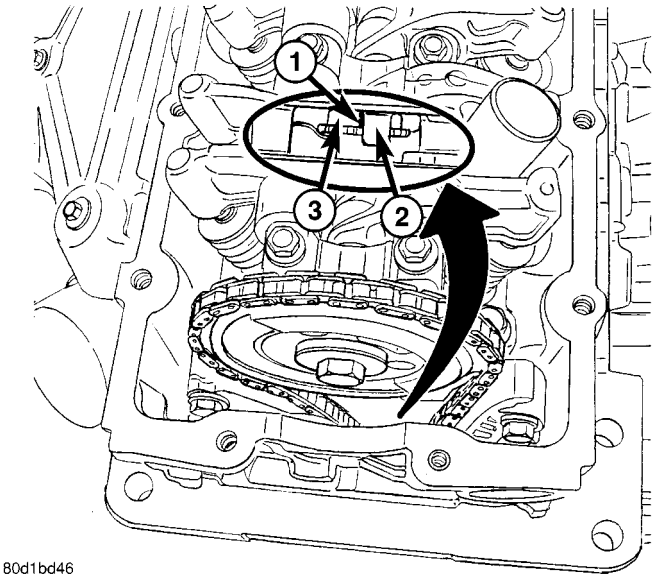

Fig. 109 Crankshaft Timing Mark

1 - PAINT MARK ON CRANKSHAFT SPROCKET
2 - ENGINE BLOCK BOSS
3 - CRANKSHAFT SPROCKET

(7) Remove the accessory drive belt splash shield.

(8) Remove the accessory drive belt (Refer to 7 - COOLING/ACCESSORY DRIVE/DRIVE BELTS - REMOVAL).

(9) Remove the crankshaft vibration damper (Refer to 9 - ENGINE/ENGINE BLOCK/VIBRATION DAMPER - REMOVAL).

(10) Remove the accessory drive belt tensioner (Refer to 7 - COOLING/ACCESSORY DRIVE/BELT TENSIONERS - REMOVAL).

(11) Remove the accessory drive belt idler pulley (Refer to 7 - COOLING/ACCESSORY DRIVE/IDLER PULLEY - REMOVAL).

(12) Remove the air conditioning compressor mounting bolts and position compressor out of the way. **Do Not** disconnect lines from air conditioning compressor. Support air conditioning compressor with suitable strap.

(13) Remove the power steering pump/water pump mounting bolts and position pump out of the way.

(14) Remove the timing cover bolts. Note the location of the shoulder bolt(s).

(15) Remove the timing cover (Fig. 110).

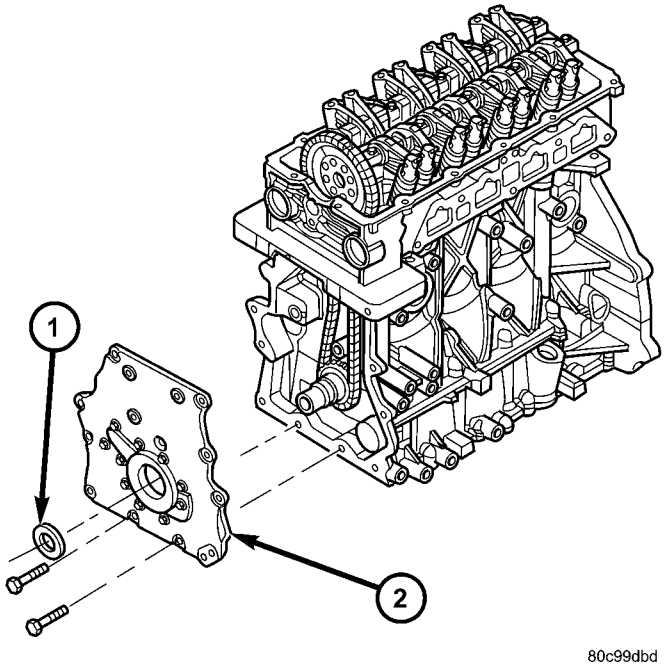

Fig. 110 Timing Chain Cover

1 - FRONT CRANKSHAFT OIL SEAL
2 - TIMING CHAIN COVER

INSTALLATION

(1) Clean all sealing surfaces.

(2) Replace timing cover seals (Fig. 111).

(3) Apply a 3.2 mm (0.125 in.) bead of Mopar® Engine RTV GEN II at the parting line of the engine block/bedplate as shown in (Fig. 112).

(4) Prime oil pump before installation by filling rotor cavity with engine oil.

(5) Align oil pump rotor flats with flats on crankshaft as you install the timing cover to the block. Hand start all fasteners. Torque fasteners in the sequence shown in (Fig. 113) to 12 N·m (105 in. lbs.).

(6) Install the power steering/water pump. Tighten bolts to 28 N·m (250 in. lbs.).

(7) Install air conditioning compressor. Tighten bolts to 28 N·m (250 in. lbs.).

TIMING CHAIN COVER (Continued)

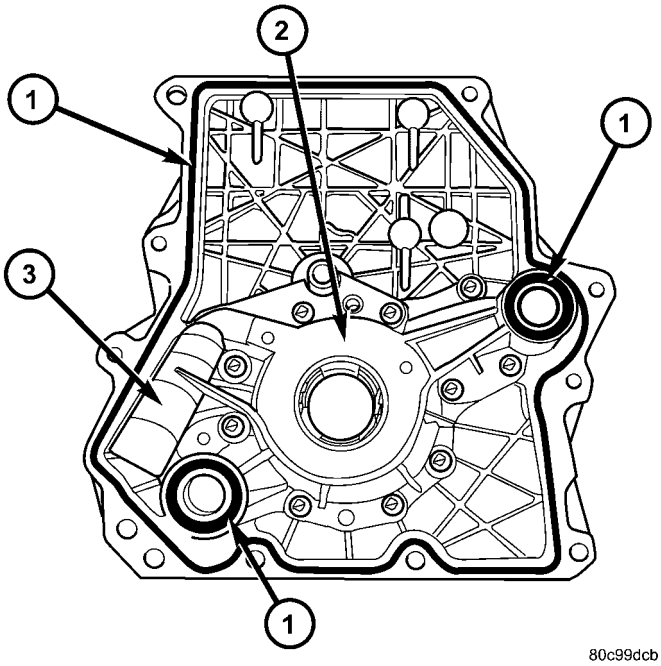

Fig. 111 Timing Chain Cover Seals

1 - TIMING CHAIN COVER SEALS
2 - OIL PUMP
3 - PRESSURE RELIEF VALVE

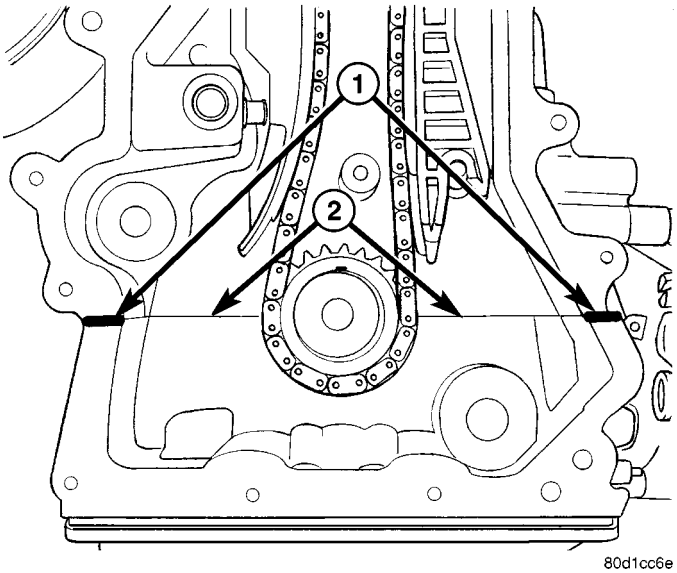

Fig. 112 Timing Chain Cover Sealing - RTV Location

1 - 3.2 mm (0.125 in.) BEAD OF RTV AT PARTING LINE
2 - PARTING LINE OF ENGINE BLOCK/BEDPLATE

(8) Install the accessory drive belt idler pulley(Refer to 7 - COOLING/ACCESSORY DRIVE/IDLER PULLEY - INSTALLATION).

(9) Install the accessory drive belt tensioner (Refer to 7 - COOLING/ACCESSORY DRIVE/BELT TENSIONERS - INSTALLATION).

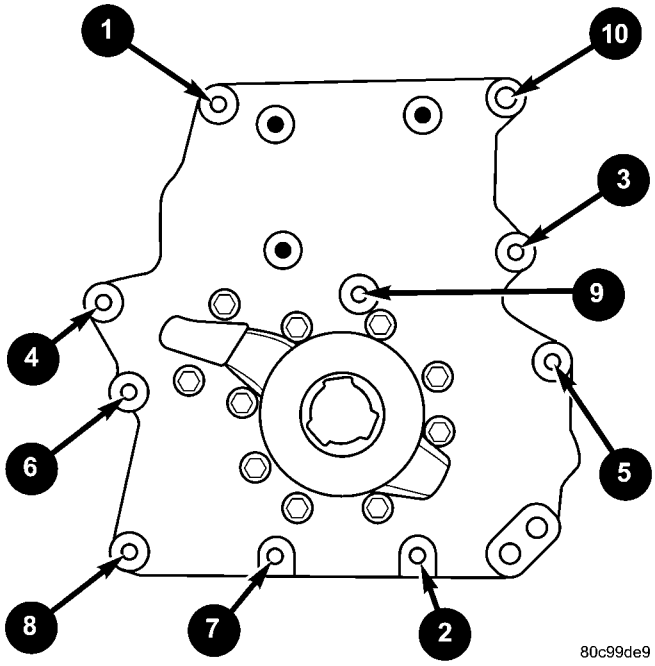

Fig. 113 Timing Chain Cover Tightening Sequence

(10) Install the crankshaft vibration damper (Refer to 9 - ENGINE/ENGINE BLOCK/VIBRATION DAMPER - INSTALLATION).

(11) Install the accessory drive belt (Refer to 7 - COOLING/ACCESSORY DRIVE/DRIVE BELTS - INSTALLATION).

(12) Install the accessory drive belt splash shield.

(13) Install the right front wheel.

(14) Lower vehicle.

(15) Install the radiator cooling fan (Refer to 7 - COOLING/ENGINE/RADIATOR FAN - INSTALLATION).

(16) Connect upper radiator hose.

(17) Install the power steering reservoir bracket bolts.

(18) Connect the negative battery cable.

(19) Fill the cooling system (Refer to 7 - COOLING/ENGINE - STANDARD PROCEDURE).

TIMING CHAIN/GUIDES/ SPROCKETS

REMOVAL

REMOVAL - TIMING CHAIN AND GUIDES

(1) Disconnect negative battery cable.

(2) Remove cylinder head cover (Refer to 9 - ENGINE/CYLINDER HEAD/CYLINDER HEAD COVER(S) - REMOVAL).

(3) Remove camshaft position sensor.

TIMING CHAIN/GUIDES/SPROCKETS (Continued)

(4) Remove timing chain cover (Refer to 9 - ENGINE/VALVE TIMING/TIMING CHAIN COVER - REMOVAL).

(5) Rotate crankshaft until number one cylinder is at TDC on compression stroke.

(6) Using Special Tool 8435 to hold camshaft sprocket, remove camshaft sprocket bolt (Fig. 114).

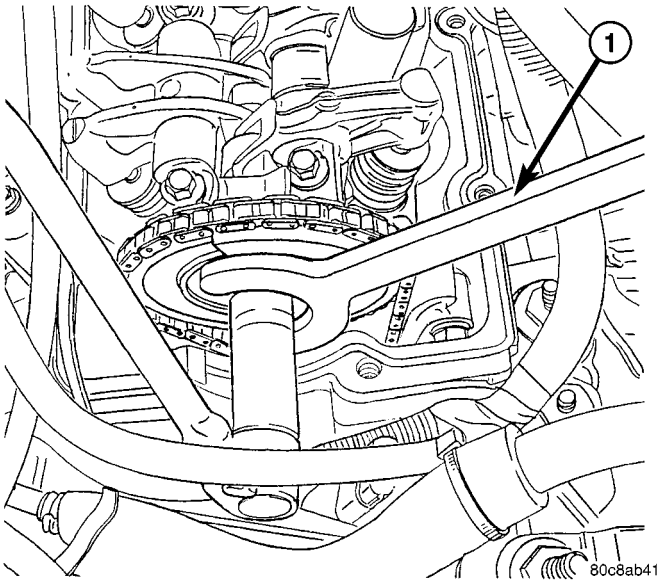

Fig. 114 Special Tool 8435 - Camshaft Sprocket Holding Wrench

1 - SPECIAL TOOL 8435

(7) Remove the timing chain tensioner plug from engine block. Remove oil reservoir cap and timing chain tensioner (Fig. 115).

(8) Remove right engine mount bracket (Refer to 9 - ENGINE/ENGINE MOUNTING/ENGINE MOUNT BRACKET - REMOVAL).

(9) Remove camshaft sprocket from camshaft. Partially lower camshaft sprocket to allow timing chain to be removed from camshaft sprocket.

(10) Remove cylinder head plugs. Remove fasteners holding timing chain guides to cylinder head. Remove timing chain guides (Fig. 116).

(11) Remove timing chain (Fig. 121).

REMOVAL - CAMSHAFT SPROCKET

(1) Disconnect negative battery cable.

(2) Remove cylinder head cover (Refer to 9 - ENGINE/CYLINDER HEAD/CYLINDER HEAD COVER(S) - REMOVAL).

(3) Disconnect and remove the camshaft position sensor.

(4) Rotate crankshaft until triangular timing mark on camshaft sprocket is at the 12 o'clock position.

(5) For reassembly purposes, paint the timing chain link that lines up with camshaft timing mark (Fig. 117).

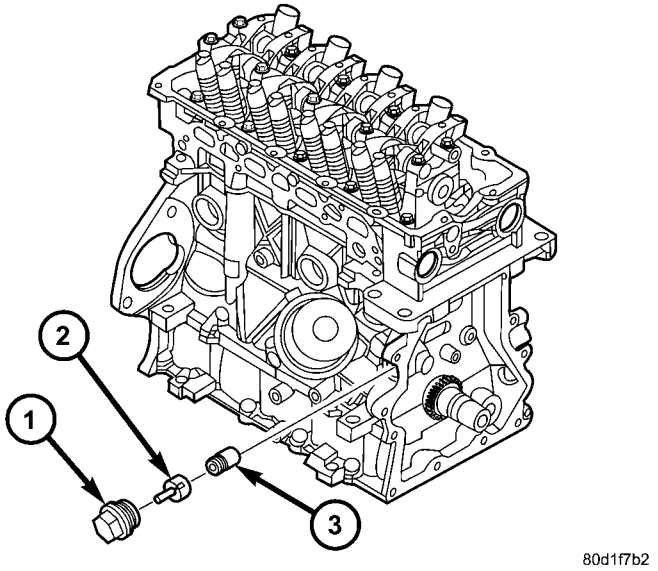

Fig. 115 Timing Chain Tensioner

1 - PLUG WITH SEAL RING
2 - OIL RESERVOIR CAP
3 - TIMING CHAIN TENSIONER

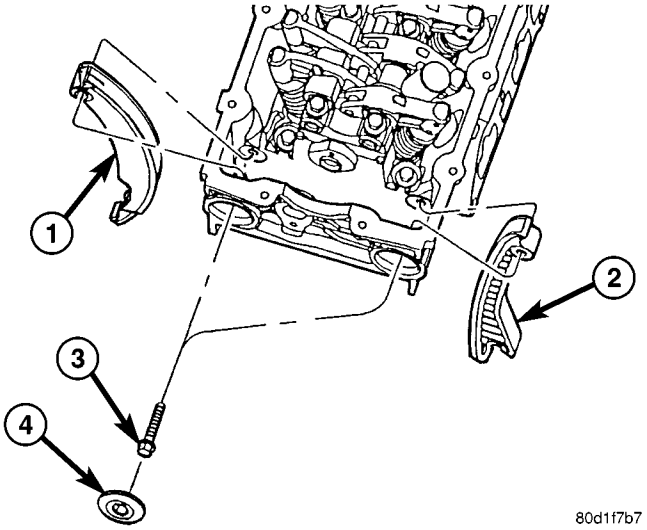

Fig. 116 Timing Chain Guide Mounting

1 - RIGHT TIMING CHAIN GUIDE (MOVABLE)
2 - LEFT TIMING CHAIN GUIDE (FIXED)
3 - FASTENER(S)
4 - CYLINDER HEAD PLUG(S)

(6) Using Special Tool 8435 to hold camshaft sprocket, remove camshaft sprocket bolt (Fig. 114).

(7) Remove the timing chain tensioner plug from engine block. Remove oil reservoir cap and timing chain tensioner (Fig. 115).

(8) Remove camshaft sprocket from camshaft. Partially lower camshaft sprocket to allow timing chain to be removed from camshaft sprocket.

TIMING CHAIN/GUIDES/SPROCKETS (Continued)

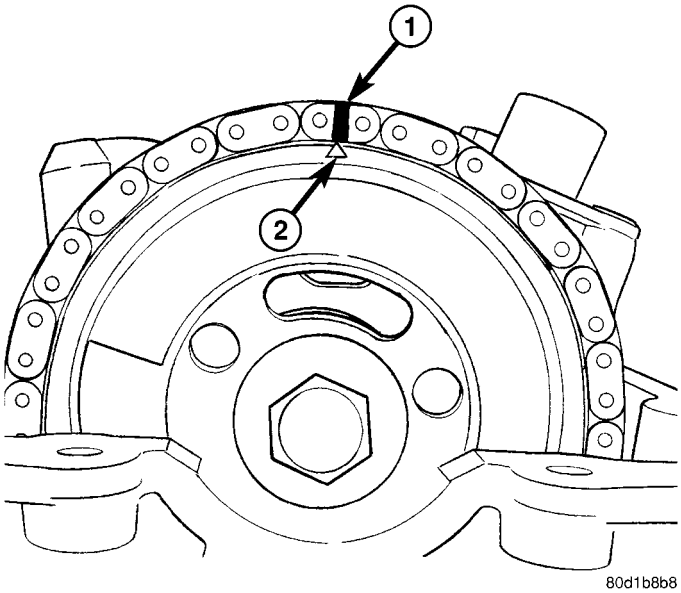

Fig. 117 Identify Timing Chain Link for Reassembly Purposes

1 - PAINT THE LINK THAT ALIGNS WITH TIMING MARK
2 - CAMSHAFT SPROCKET TIMING MARK

REMOVAL - CRANKSHAFT SPROCKET

(1) Remove timing chain (Refer to 9 - ENGINE/VALVE TIMING/TIMING CHAIN - REMOVAL).

(2) Remove crankshaft sprocket by first installing crankshaft vibration damper bolt. Apply grease or equivalent to damper bolt head and position Special Tools 5048-1, 5048-6, and 8539 on sprocket and crankshaft nose (Fig. 118).

(3) Remove sprocket using care not to rotate the crankshaft.

INSTALLATION

INSTALLATION - CRANKSHAFT SPROCKET

(1) Install crankshaft sprocket using Special Tools 8385 and 8386 (Fig. 119).

(2) Install sprocket using care not to rotate the crankshaft.

INSTALLATION - CAMSHAFT SPROCKET

(1) Align triangular timing mark on cam sprocket with the timing chain link that was painted during disassembly. Install timing chain on cam sprocket (Fig. 117).

(2) Install camshaft sprocket on the camshaft.

CAUTION: Do Not use an impact wrench for tightening the camshaft sprocket bolt. Damage to the camshaft timing pin can result. Use a hand wrench only.

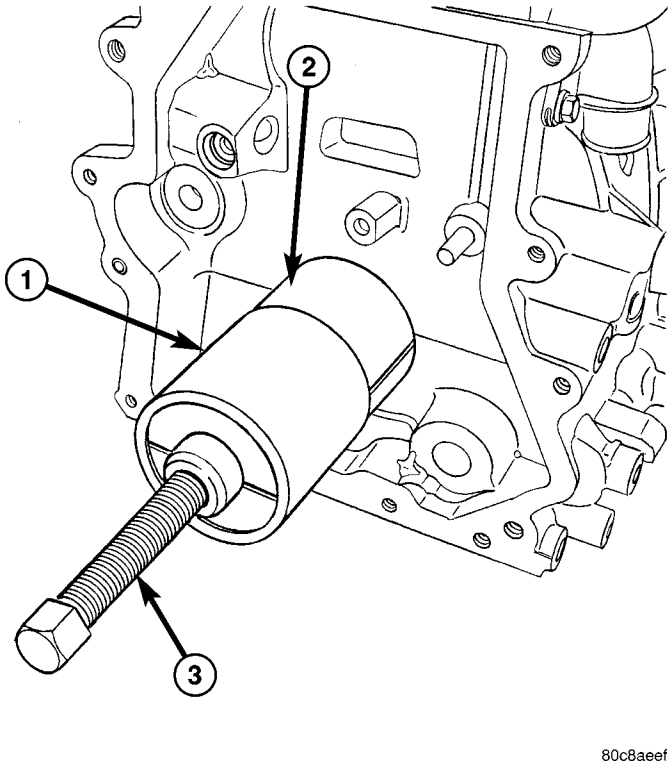

Fig. 118 Crankshaft Sprocket Removal

1 - SPECIAL TOOL 5048-6
2 - SPECIAL TOOL 8539
3 - SPECIAL TOOL 5048-1

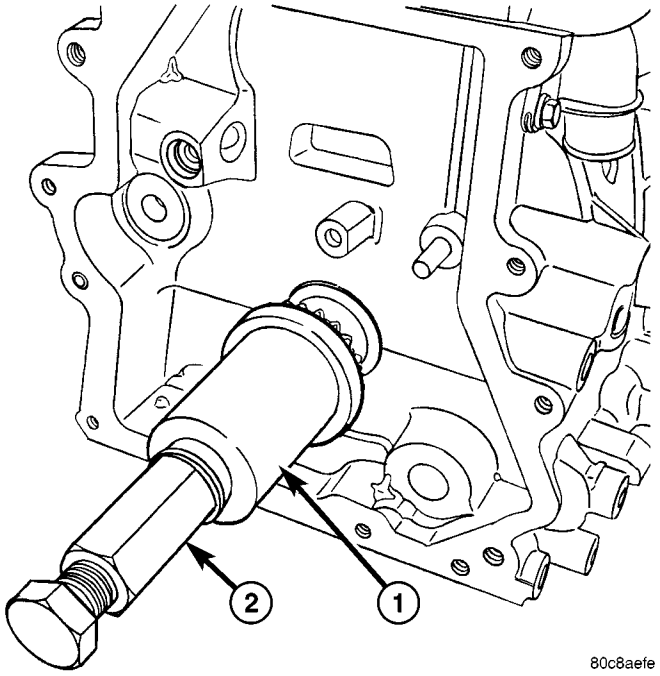

Fig. 119 Crankshaft Sprocket Installation

1 - SPECIAL TOOL 8386
2 - SPECIAL TOOL 8385

TIMING CHAIN/GUIDES/SPROCKETS (Continued)

(3) Install camshaft sprocket bolt. While holding the camshaft sprocket with Special Tool 8435, torque bolt to 115 N·m (85 ft. lbs.) (Fig. 114).

(4) Reset the timing chain tensioner using the following method:

(a) Remove oil reservoir cap from timing chain tensioner (Fig. 122).

(b) Place tensioner on a clean flat surface.

(c) Place your palm against the tensioner and press down on the tensioner with continuous pressure until the fully extended tensioner bottoms out (Fig. 123).

(d) Install oil reservoir cap onto timing chain tensioner (Fig. 122).

(5) Install timing chain tensioner with oil reservoir cap into engine block (Fig. 115).

(6) Install timing chain tensioner plug with seal ring. Torque plug to 62 N·m (46 ft. lbs.).

CAUTION: Do not pry directly on chain. Damage to timing chain may occur.

(7) Using a long thin screwdriver, pry in on the right (movable) timing chain guide until the timing chain tensioner rachets out to tension the chain (Fig. 120).

NOTE: Ensure the timing chain is properly positioned within the channel of the timing chain guides.

(8) Install cylinder head cover (Refer to 9 - ENGINE/CYLINDER HEAD/CYLINDER HEAD COVER(S) - INSTALLATION).

(9) Install camshaft position sensor. Torque fastener to 10 N·m (85 in. lbs.). Reconnect connector.

(10) Connect negative battery cable.

INSTALLATION - TIMING CHAIN AND GUIDES

(1) Install the left timing chain guide. Torque fastener to 28 N·m (250 in. lbs.) (Fig. 116).

(2) Install the right timing chain guide. Torque fastener to 28 N·m (250 in. lbs.) (Fig. 116).

NOTE: When installing the timing chain, ensure the plated links on the timing chain are aligned with the timing marks on the crankshaft and camshaft sprockets. If a timing chain is being re-used, and the plating is wore off the chain, the links also have machined dimples (Fig. 121).

(3) Feed the timing chain through the opening in the top of the cylinder head.

(4) Install the timing chain around the crankshaft sprocket, aligning the two plated links with the crankshaft sprocket timing marks (Fig. 121).

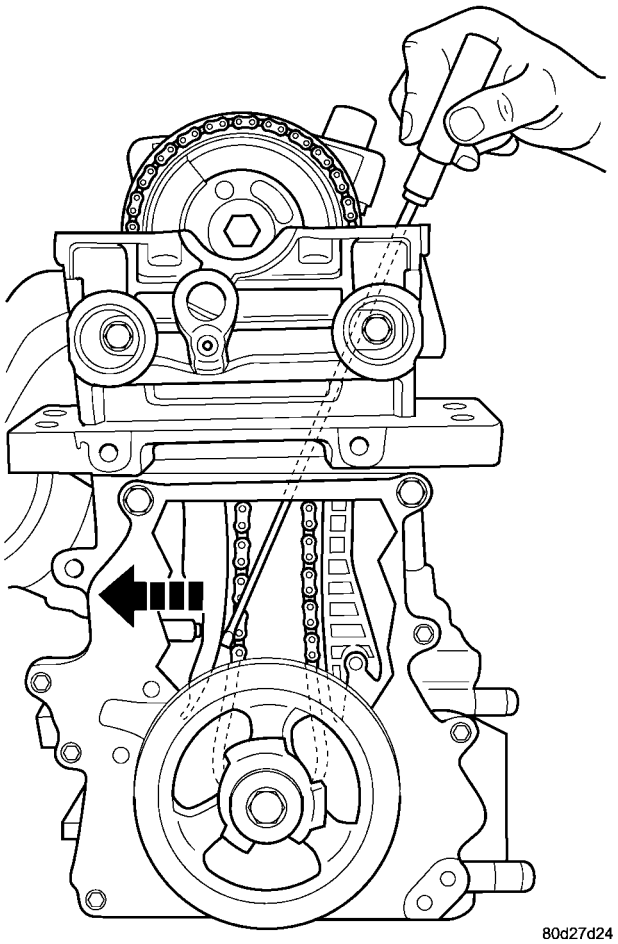

Fig. 120 Timing Chain Tensioner Activation

(5) Install the timing chain around the camshaft sprocket, aligning the single plated link with the camshaft sprocket timing mark (Fig. 121).

(6) Install the camshaft sprocket on the camshaft.

CAUTION: DO NOT use an impact wrench (or any other air operated tool) for tightening the camshaft sprocket bolt. Damage to the camshaft timing pin can result. ONLY use a hand wrench while holding camshaft sprocket with Special Tool.

(7) Install camshaft sprocket bolt. While holding the camshaft sprocket with Special Tool 8435, torque bolt to 115 N·m (85 ft. lbs.) (Fig. 114).

(8) Reset the timing chain tensioner using the following method:

(a) Remove oil reservoir cap from timing chain tensioner (Fig. 122).

(b) Place tensioner on a clean flat surface.

(c) Place your palm against the tensioner and press down on the tensioner with continuous pressure until the fully extended tensioner bottoms out (Fig. 123).

TIMING CHAIN/GUIDES/SPROCKETS (Continued)

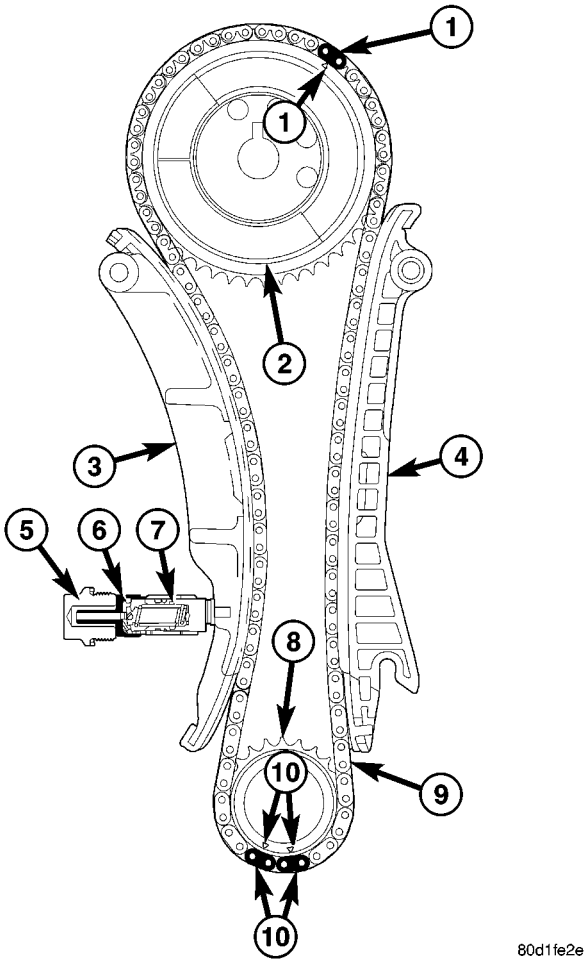

Fig. 121 Timing Drive System

1 - CAMSHAFT TIMING MARK ALIGNS WITH SINGLE PLATED/ DIMPLED LINK
2 - CAMSHAFT SPROCKET
3 - RIGHT TIMING CHAIN GUIDE (MOVABLE)
4 - LEFT TIMING CHAIN GUIDE (FIXED)
5 - PLUG WITH SEAL RING
6 - OIL RESERVOIR CAP
7 - TIMING CHAIN TENSIONER
8 - CRANKSHAFT SPROCKET
9 - TIMING CHAIN
10 - CRANKSHAFT TIMING MARKS ALIGN WITH DOUBLE PLATED/DIMPLED LINKS

(d) Install oil reservoir cap onto timing chain tensioner (Fig. 122).

(9) Install timing chain tensioner with oil reservoir cap into engine block (Fig. 115).

(10) Install timing chain tensioner plug with seal ring. Torque plug to 62 N·m (46 ft. lbs.).

WARNING: DO NOT ALLOW FINGERS TO GET TRAPPED BETWEEN THE TIMING CHAIN AND GUIDE

(11) Depress the right timing chain guide against the tensioner until it releases (Fig. 124).

(12) Install cylinder head plugs. Torque to 18 N·m (162 in. lbs.) (Fig. 116).

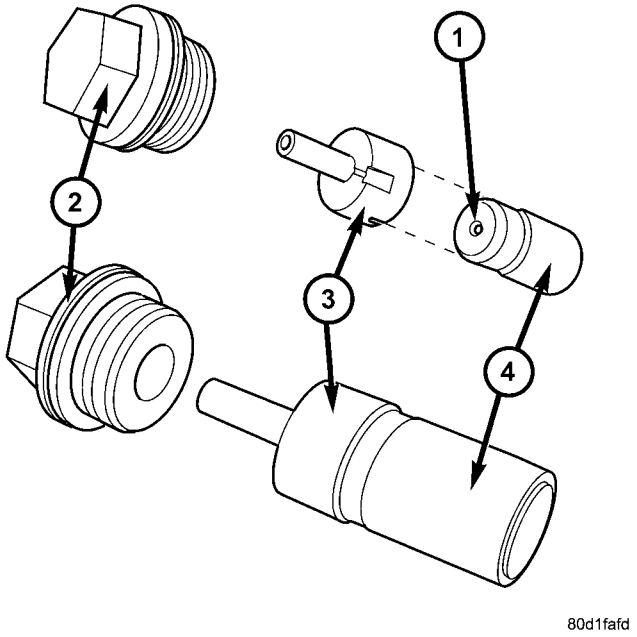

Fig. 122 Timing Chain Tensioner/Oil Reservoir Cap/Plug

1 - CHECK BALL
2 - PLUG WITH SEAL RING
3 - OIL RESERVOIR CAP
4 - TIMING CHAIN TENSIONER

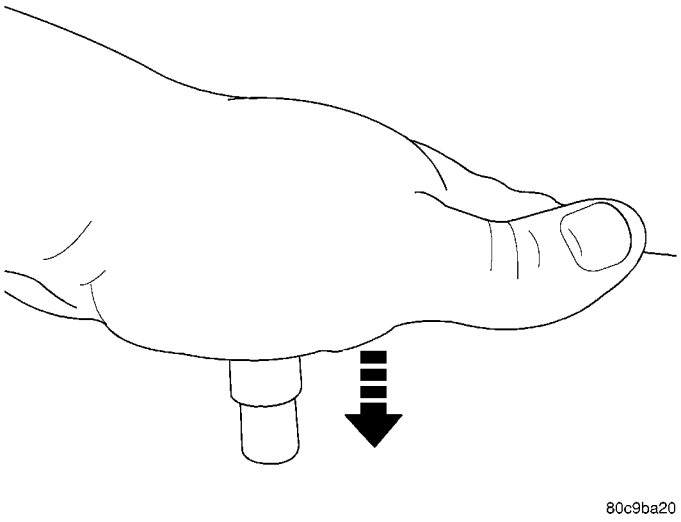

Fig. 123 Resetting Timing Chain Tensioner

(13) Install cylinder head cover (Refer to 9 - ENGINE/CYLINDER HEAD/CYLINDER HEAD COVER(S) - INSTALLATION).

(14) Install camshaft position sensor. Torque fastener to 10 N·m (85 in. lbs.). Reconnect connector.

(15) Install right engine mount bracket (Refer to 9 - ENGINE/ENGINE MOUNTING/ENGINE MOUNT BRACKET - INSTALLATION).

TIMING CHAIN/GUIDES/SPROCKETS (Continued)

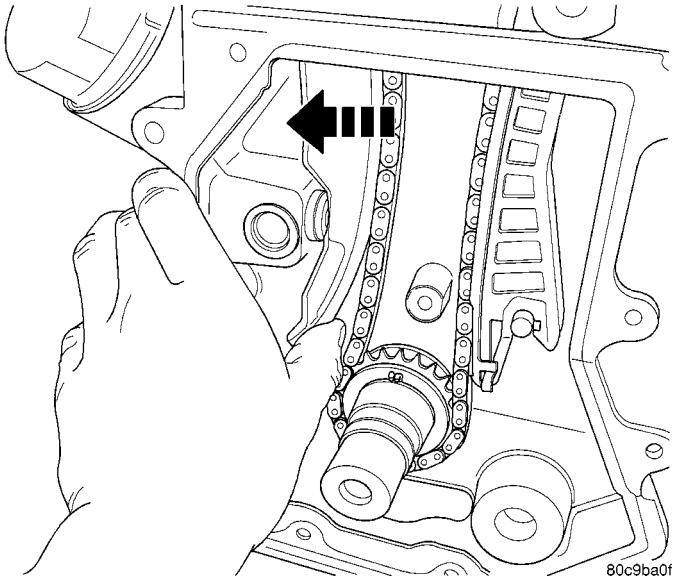

Fig. 124 Timing Chain Tensioner Activation

(16) Install the timing chain cover (Refer to 9 - ENGINE/VALVE TIMING/TIMING BELT / CHAIN COVER(S) - INSTALLATION).

(17) Connect negative battery cable.

ENGINE 2.0L DOHC

TABLE OF CONTENTS

page

ENGINE 2.0L DOHC
DESCRIPTION 75
DIAGNOSIS AND TESTING
DIAGNOSIS AND TESTING - ENGINE DIAGNOSIS - INTRODUCTION 76
DIAGNOSIS AND TESTING - ENGINE DIAGNOSIS - PERFORMANCE 76
DIAGNOSIS AND TESTING - ENGINE DIAGNOSIS - MECHANICAL 78
DIAGNOSIS AND TESTING - CYLINDER COMBUSTION PRESSURE LEAKAGE TEST 80
DIAGNOSIS AND TESTING - CYLINDER COMPRESSION PRESSURE TEST 80
DIAGNOSIS AND TESTING - ENGINE OIL LEAK INSPECTION 81
STANDARD PROCEDURE
STANDARD PROCEDURE - REPAIR OF DAMAGED OR WORN THREADS 82
STANDARD PROCEDURE - HYDROSTATIC LOCKED ENGINE 82
STANDARD PROCEDURE - FORM-IN-PLACE GASKETS AND SEALERS 82
STANDARD PROCEDURE - ENGINE GASKET SURFACE PREPARATION 83
STANDARD PROCEDURE - ENGINE CORE AND OIL GALLERY PLUGS 84
STANDARD PROCEDURE - MEASURING BEARING CLEARANCE USING PLASTIGAGE 84
REMOVAL - ENGINE ASSEMBLY 84
INSTALLATION - ENGINE ASSEMBLY 87
SPECIFICATIONS
2.0L DOHC ENGINE 89
TORQUE 92
SPECIAL TOOLS
2.0L DOHC ENGINE 92
AIR CLEANER ELEMENT
REMOVAL 96
INSTALLATION 96
AIR CLEANER HOUSING
REMOVAL 96
INSTALLATION 96
CYLINDER HEAD
DESCRIPTION 96
DIAGNOSIS AND TESTING—CYLINDER HEAD GASKET 96
REMOVAL 97
CLEANING 98
INSPECTION 98
INSTALLATION 99
CAMSHAFT OIL SEAL(S)
REMOVAL 100
INSTALLATION 101
CAMSHAFT(S)
DESCRIPTION 101
OPERATION 101
STANDARD PROCEDURE - MEASURING CAMSHAFT END PLAY 101
REMOVAL 101
CLEANING 102
INSPECTION 102
INSTALLATION 102
CYLINDER HEAD COVER
REMOVAL 103
INSTALLATION 103
HYDRAULIC LASH ADJUSTERS
DIAGNOSIS AND TESTING
HYDRAULIC LASH ADJUSTER NOISE DIAGNOSIS 105
REMOVAL 105
INSTALLATION 105
INTAKE/EXHAUST VALVES & SEATS
DESCRIPTION 106
OPERATION 106
CLEANING 106
ROCKER ARMS
REMOVAL 106
INSPECTION 106
INSTALLATION 106
VALVE SPRINGS AND SEALS
REMOVAL
REMOVAL - CYLINDER HEAD ON 107
REMOVAL - CYLINDER HEAD OFF 107
INSPECTION 107
INSTALLATION
INSTALLATION - CYLINDER HEAD ON 107
INSTALLATION - CYLINDER HEAD OFF . . . 107
ENGINE BLOCK
DESCRIPTION 108
STANDARD PROCEDURE - CYLINDER BORE HONING 108
CLEANING 109
INSPECTION 109
CRANKSHAFT
STANDARD PROCEDURE - CRANKSHAFT END PLAY 110
REMOVAL - CRANKSHAFT 110
INSPECTION 112
INSTALLATION - CRANKSHAFT 112

CRANKSHAFT OIL SEAL - FRONT
REMOVAL 114
INSTALLATION 114
CRANKSHAFT OIL SEAL - REAR
REMOVAL 115
INSTALLATION 115
PISTON & CONNECTING ROD
DESCRIPTION 117
STANDARD PROCEDURE - PISTON TO CYLINDER BORE FITTING 117
REMOVAL 118
INSTALLATION 118
CONNECTING ROD BEARINGS
STANDARD PROCEDURE CONNECTING ROD - FITTING 119
PISTON RINGS
STANDARD PROCEDURE - PISTON RING - FITTING 120
REMOVAL 120
INSTALLATION 120
STRUCTURAL COLLAR
REMOVAL 121
INSTALLATION 121
VIBRATION DAMPER
REMOVAL 122
INSTALLATION 122
ENGINE MOUNTING
DESCRIPTION 122
OPERATION 122
LEFT MOUNT
REMOVAL 123
INSTALLATION 123
RIGHT MOUNT
REMOVAL 123
INSTALLATION 123
TORQUE STRUT
REMOVAL
REMOVAL - UPPER 124
REMOVAL - LOWER 125
INSTALLATION
INSTALLATION - UPPER 125
INSTALLATION - LOWER 125
ADJUSTMENTS
ENGINE TORQUE STRUT ADJUSTMENT . . 125
LUBRICATION
DESCRIPTION 126
OPERATION 126
DIAGNOSIS AND TESTING - CHECKING ENGINE OIL PRESSURE 126
OIL
STANDARD PROCEDURE
ENGINE OIL LEVEL CHECK 128
STANDARD PROCEDURE - ENGINE OIL AND FILTER CHANGE 129
OIL FILTER
REMOVAL 129
INSTALLATION 129
OIL FILTER ADAPTER
REMOVAL 130
INSTALLATION 130
OIL PAN
REMOVAL 130
INSTALLATION 130
OIL PRESSURE SENSOR/SWITCH
REMOVAL 131
INSTALLATION 131
OIL PUMP
REMOVAL 131
DISASSEMBLY 132
INSPECTION 132
ASSEMBLY 134
INSTALLATION 134
INTAKE MANIFOLD
DIAGNOSIS AND TESTING - INTAKE MANIFOLD LEAKS 135
REMOVAL
REMOVAL - UPPER INTAKE MANIFOLD . . . 135
REMOVAL - LOWER INTAKE MANIFOLD . . . 138
CLEANING 138
INSPECTION 138
INSTALLATION
INSTALLATION - UPPER INTAKE MANIFOLD. 138
INSTALLATION - LOWER INTAKE MANIFOLD. 139
EXHAUST MANIFOLD
REMOVAL 140
CLEANING 140
INSPECTION 140
INSTALLATION 141
VALVE TIMING
STANDARD PROCEDURE - VALVE TIMING VERIFICATION 142
TIMING BELT COVER(S)
REMOVAL 142
INSTALLATION 143
TIMING BELT AND SPROCKETS
REMOVAL
REMOVAL - TIMING BELT 143
REMOVAL - CAMSHAFT SPROCKET(S) . . . 145
REMOVAL - CRANKSHAFT SPROCKET . . . 145
CLEANING 146
INSTALLATION
INSTALLATION - CRANKSHAFT SPROCKET . 146
INSTALLATION - CAMSHAFT SPROCKETS . 146
INSTALLATION - TIMING BELT 146
TIMING BELT TENSIONER & PULLEY
REMOVAL 148
INSTALLATION 148

ENGINE 2.0L DOHC

DESCRIPTION

The 2.0 Liter (122 cu. in.) in-line four cylinder engine is a dual over-head camshaft with hydraulic lash adjusters and four valves per cylinder design (Fig. 1). The engine does not have provisions for a free wheeling valvetrain.

The cylinders are numbered from front of the engine to the rear. The firing order is 1–3–4–2.

The engine identification number is located on the left side of the engine block at the bedplate/engine block parting line near the crankshaft position sensor (Fig. 2).

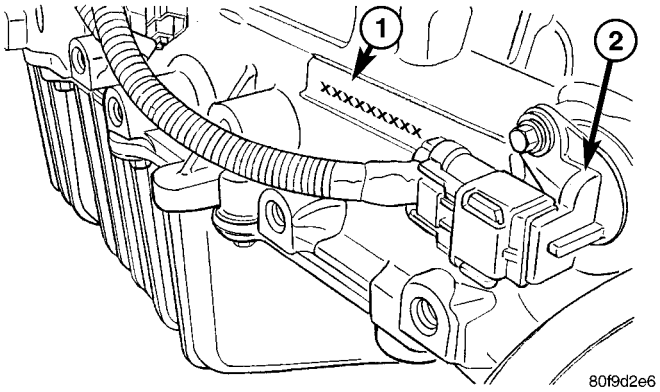

Fig. 2 Engine Identification

1 - ENGINE IDENTIFICATION LOCATION
2 - CRANKSHAFT POSITION SENSOR

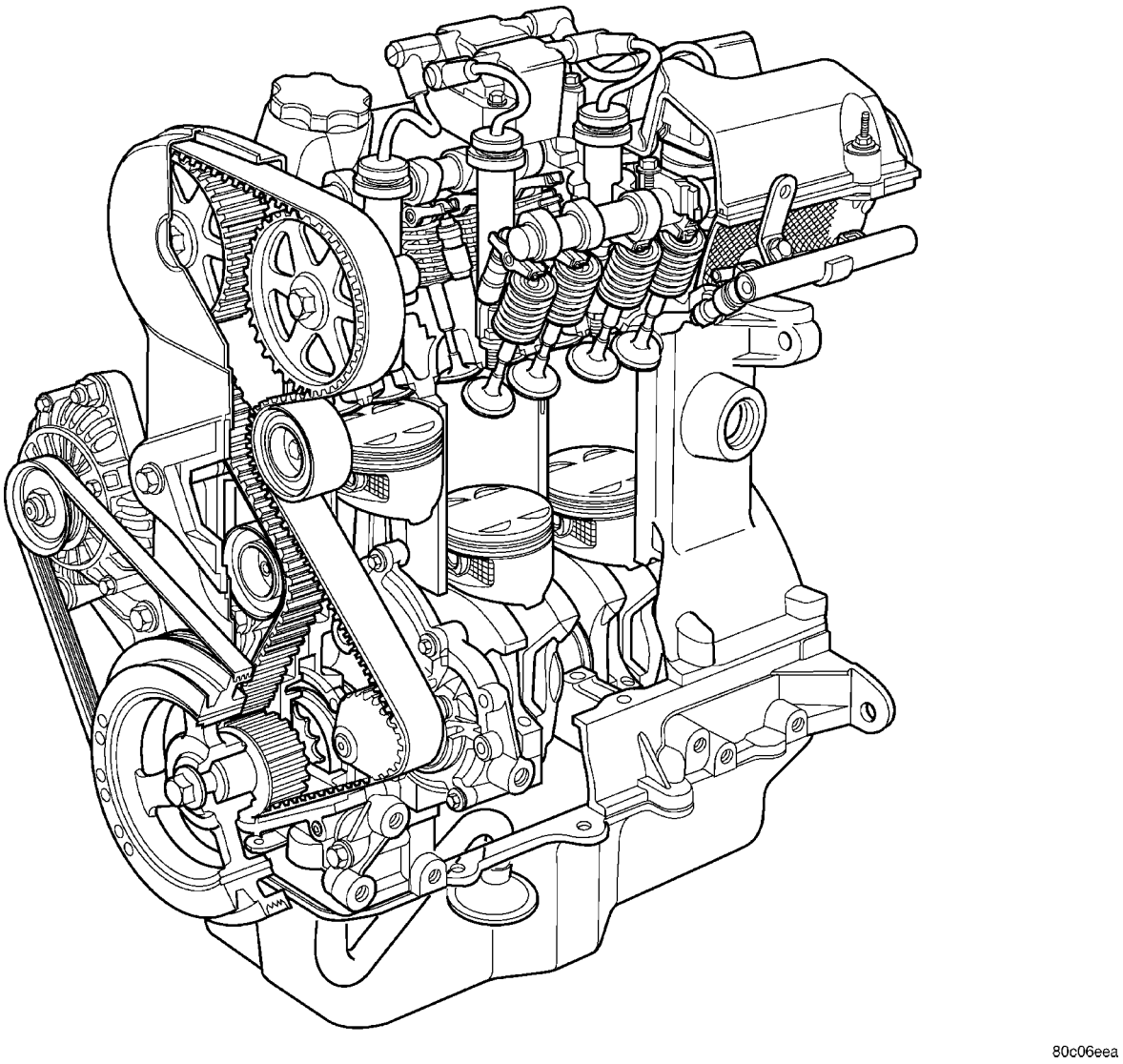

Fig. 1 2.0L DOHC Engine

ENGINE 2.0L DOHC (Continued)

DIAGNOSIS AND TESTING

DIAGNOSIS AND TESTING - ENGINE DIAGNOSIS - INTRODUCTION

Engine diagnosis is helpful in determining the causes of malfunctions not detected and remedied by routine maintenance.

These malfunctions may be classified as either mechanical (e.g., a strange noise), or performance (e.g., engine idles rough and stalls).

Refer to the Engine Mechanical and the Engine Performance diagnostic charts, for possible causes and corrections of malfunctions (Refer to 9 - ENGINE - DIAGNOSIS AND TESTING - MECHANICAL) (Refer to 9 - ENGINE - DIAGNOSIS AND TESTING - PERFORMANCE).

For fuel system diagnosis, (Refer to 14 - FUEL SYSTEM/FUEL DELIVERY - DIAGNOSIS AND TESTING).

Additional tests and diagnostic procedures may be necessary for specific engine malfunctions that cannot be isolated with the Service Diagnosis charts. Information concerning additional tests and diagnosis is provided within the following:

- Cylinder Compression Pressure Test
- Cylinder Combustion Pressure Leakage Test
- Engine Cylinder Head Gasket Failure Diagnosis
- Intake Manifold Leakage Diagnosis
- Hydraulic Lash Adjuster Noise Diagnosis
- Engine Oil Leak Inspection

DIAGNOSIS AND TESTING - ENGINE DIAGNOSIS - PERFORMANCE

CONDITION	POSSIBLE CAUSE	CORRECTION
ENGINE WILL NOT START	1. Weak battery.	1. Test battery. Charge or replace as necessary. (Refer to 8 - ELECTRICAL/BATTERY SYSTEM - DIAGNOSIS AND TESTING)
	2. Corroded or loose battery connections.	2. Clean and tighten battery connections. Apply a coat of light mineral grease to terminals.
	3. Faulty starter.	3. Test starting system. (Refer to 8 - ELECTRICAL/STARTING - DIAGNOSIS AND TESTING)
	4. Faulty coil(s) or control unit.	4. Test and replace as needed. (Refer to Appropriate Diagnostic Information)
	5. Incorrect spark plug gap.	5. Set gap. (Refer to 8 - ELECTRICAL/IGNITION CONTROL - SPECIFICATIONS)
	6. Contamination in fuel system.	6. Clean system and replace fuel filter.
	7. Faulty fuel pump.	7. Test fuel pump and replace as needed. (Refer to Appropriate Diagnostic Information)
	8. Incorrect engine timing.	8. Check for a skipped timing belt/chain.

ENGINE 2.0L DOHC (Continued)

CONDITION	POSSIBLE CAUSE	CORRECTION
ENGINE STALLS OR IDLES ROUGH	1. Idle speed too low.	1. Test minimum air flow. (Refer to Appropriate Diagnostic Information)
	2. Incorrect fuel mixture.	2. (Refer to Appropriate Diagnostic Information)
	3. Intake manifold leakage.	3. Inspect intake manifold, manifold gasket, and vacuum hoses.
	4. Faulty ignition coil(s).	4. Test and replace as necessary. (Refer to Appropriate Diagnostic Information)
ENGINE LOSS OF POWER	1. Dirty or incorrectly gapped plugs.	1. Clean plugs and set gap.
	2. Contamination in fuel system.	2. Clean system and replace fuel filter.
	3. Faulty fuel pump.	3. Test and replace as necessary. (Refer to Appropriate Diagnostic Information)
	4. Incorrect valve timing.	4. Correct valve timing.
	5. Leaking cylinder head gasket.	5. Replace cylinder head gasket.
	6. Low compression.	6. Test compression of each cylinder.
	7. Burned, warped, or pitted valves.	7. Replace valves.
	8. Plugged or restricted exhaust system.	8. Perform exhaust restriction test. (Refer to 11 - EXHAUST SYSTEM - DIAGNOSIS AND TESTING) Install new parts, as necessary.
	9. Faulty ignition coil(s).	9. Test and replace as necessary. (Refer to Appropriate Diagnostic Information)
ENGINE MISSES ON ACCELERATION	1. Dirty or incorrectly gapped spark plugs.	1. Clean spark plugs and set gap.
	2. Contamination in Fuel System.	2. Clean fuel system and replace fuel filter.
	3. Burned, warped, or pitted valves.	3. Replace valves.
	4. Faulty ignition coil(s).	4. Test and replace as necessary. (Refer to Appropriate Diagnostic Information)
ENGINE MISSES AT HIGH SPEED	1. Dirty or incorrect spark plug gap.	1. Clean spark plugs and set gap.
	2. Faulty ignition coil(s).	2. Test and replace as necessary. (Refer to Appropriate Diagnostic Information)
	3. Dirty fuel injector(s).	3. Test and replace as necessary. (Refer to Appropriate Diagnostic Information)
	4. Contamination in fuel system.	4. Clean system and replace fuel filter.

ENGINE 2.0L DOHC (Continued)

DIAGNOSIS AND TESTING - ENGINE DIAGNOSIS - MECHANICAL

CONDITION	POSSIBLE CAUSES	CORRECTION
NOISY VALVES	1. High or low oil level in crankcase.	1. Check and correct engine oil level.
	2. Thin or diluted oil.	2. Change oil to correct viscosity.
	3. Thick oil	3. (a) Change engine oil and filter. (b) Run engine to operating temperature. (c) Change engine oil and filter again.
	4. Low oil pressure.	4. Check and correct engine oil level.
	5. Dirt in tappets/lash adjusters.	5. Replace rocker arm/hydraulic lash adjuster assembly.
	6. Worn rocker arms.	6. Inspect oil supply to rocker arms.
	7. Worn tappets/lash adjusters.	7. Install new rocker arm/hydraulic lash adjuster assembly.
	8. Worn valve guides.	8. Ream guides and install new valves with oversize stems.
	9. Excessive runout of valve seats on valve faces.	9. Grind valve seats and valves.
	10. Missing adjuster pivot.	10. Replace rocker arm/hydraulic lash adjuster assembly.
CONNECTING ROD NOISE	1. Insufficient oil supply.	1. Check engine oil level.
	2. Low oil pressure.	2. Check engine oil level. Inspect oil pump relief valve and spring.
	3. Thin or diluted oil.	3. Change oil to correct viscosity.
	4. Thick oil	4. (a) Change engine oil and filter. (b) Run engine to operating temperature. (c) Change engine oil and filter again.
	5. Excessive bearing clearance.	5. Measure bearings for correct clearance. Repair as necessary.
	6. Connecting rod journal out-of-round.	6. Replace crankshaft or grind surface.
	7. Misaligned connecting rods.	7. Replace bent connecting rods.

ENGINE 2.0L DOHC (Continued)

CONDITION	POSSIBLE CAUSES	CORRECTION
MAIN BEARING NOISE	1. Insufficient oil supply.	1. Check engine oil level.
	2. Low oil pressure.	2. Check engine oil level. Inspect oil pump relief valve and spring.
	3. Thin or diluted oil.	3. Change oil to correct viscosity.
	4. Thick oil	4. (a) Change engine oil and filter. (b) Run engine to operating temperature. (c) Change engine oil and filter again.
	5. Excessive bearing clearance.	5. Measure bearings for correct clearance. Repair as necessary.
	6. Excessive end play.	6. Check thrust bearing for wear on flanges.
	7. Crankshaft journal out-of-round or worn.	7. Replace crankshaft or grind journals.
	8. Loose flywheel or torque converter.	8. Tighten to correct torque.
OIL PRESSURE DROP	1. Low oil level.	1. Check engine oil level.
	2. Faulty oil pressure sending unit.	2. Install new sending unit.
	3. Low oil pressure.	3. Check sending unit and main bearing oil clearance.
	4. Clogged oil filter.	4. Install new oil filter.
	5. Worn parts in oil pump.	5. Replace worn parts or pump.
	6. Thin or diluted oil.	6. Change oil to correct viscosity.
	7. Oil pump relief valve stuck.	7. Remove valve and inspect, clean, or replace.
	8. Oil pump suction tube loose.	8. Remove oil pan and install new tube or clean, if necessary.
	9. Oil pump cover warped or cracked.	9. Install new oil pump.
	10. Excessive bearing clearance.	10. Measure bearings for correct clearance.
OIL LEAKS	1. Misaligned or deteriorated gaskets.	1. Replace gasket(s).
	2. Loose fastener, broken or porous metal part.	2. Tighten, repair or replace the part.
	3. Misaligned or deteriorated cup or threaded plug.	3. Replace as necessary.

ENGINE 2.0L DOHC (Continued)

CONDITION	POSSIBLE CAUSES	CORRECTION
OIL CONSUMPTION OR SPARK PLUGS FOULED	1. PCV system malfunction.	1. Check system and repair as necessary. (Refer to 25 - EMISSIONS CONTROL/ EVAPORATIVE EMISSIONS/PCV VALVE - DIAGNOSIS AND TESTING)
	2. Worn, scuffed or broken rings.	2. Hone cylinder bores. Install new rings.
	3. Carbon in oil ring slots.	3. Install new rings.
	4. Rings fitted too tightly in grooves.	4. Remove rings and check grooves. If groove is not proper width, replace piston.
	5. Worn valve guide(s).	5. Ream guide(s) and replace valve(s) with oversize valve(s) and seal(s).
	6. Valve stem seal(s) worn or damaged.	6. Replace seal(s).

DIAGNOSIS AND TESTING - CYLINDER COMBUSTION PRESSURE LEAKAGE TEST

The combustion pressure leakage test provides an accurate means for determining engine condition.

Combustion pressure leakage testing will detect:

- Exhaust and intake valve leaks (improper seating).
- Leaks between adjacent cylinders or into water jacket.
- Any causes for combustion/compression pressure loss.

WARNING: DO NOT REMOVE THE PRESSURE CAP WITH THE SYSTEM HOT AND UNDER PRESSURE BECAUSE SERIOUS BURNS FROM COOLANT CAN OCCUR.

Check the coolant level and fill as required. DO NOT install the pressure cap.

Start and operate the engine until it attains normal operating temperature, then turn the engine OFF.

Clean spark plug recesses with compressed air.

Remove the spark plugs.

Remove the oil filler cap.

Remove the air cleaner.

Calibrate the tester according to the manufacturer's instructions. The shop air source for testing should maintain 483 kPa (70 psi) minimum, 1,379 kPa (200 psi) maximum, with 552 kPa (80 psi) recommended.

Perform the test procedures on each cylinder according to the tester manufacturer's instructions. While testing, listen for pressurized air escaping through the throttle body, tailpipe and oil filler cap opening. Check for bubbles in the coolant.

All gauge pressure indications should be equal, with no more than 25% leakage per cylinder.

FOR EXAMPLE: At 552 kPa (80 psi) input pressure, a minimum of 414 kPa (60 psi) should be maintained in the cylinder.

DIAGNOSIS AND TESTING - CYLINDER COMPRESSION PRESSURE TEST

The results of a cylinder compression pressure test can be utilized to diagnose several engine malfunctions.

Ensure the battery is completely charged and the engine starter motor is in good operating condition. Otherwise the indicated compression pressures may not be valid for diagnosis purposes.

(1) Check engine oil level and add oil if necessary.

(2) Drive the vehicle until engine reaches normal operating temperature. Select a route free from traffic and other forms of congestion, observe all traffic laws, and accelerate through the gears several times briskly.

(3) Remove all spark plugs from engine. As spark plugs are being removed, check electrodes for abnormal firing indicators fouled, hot, oily, etc. Record cylinder number of spark plug for future reference.

(4) Remove the Auto Shutdown (ASD) relay from the PDC.

(5) Be sure throttle blade is fully open during the compression check.

(6) Insert compression gauge adaptor Special Tool 8116 or the equivalent, into the #1 spark plug hole in cylinder head. Connect the 0–500 psi (Blue) pressure

ENGINE 2.0L DOHC (Continued)

transducer (Special Tool CH7059) with cable adaptors to the DRBIII®. For Special Tool identification, (Refer to 9 - ENGINE - SPECIAL TOOLS).

(7) Crank engine until maximum pressure is reached on gauge. Record this pressure as #1 cylinder pressure.

(8) Repeat the previous step for all remaining cylinders.

(9) Compression should not be less than 689 kPa (100 psi) and not vary more than 25 percent from cylinder to cylinder.

(10) If one or more cylinders have abnormally low compression pressures, repeat the compression test.

(11) If the same cylinder or cylinders repeat an abnormally low reading on the second compression test, it could indicate the existence of a problem in the cylinder in question. **The recommended compression pressures are to be used only as a guide to diagnosing engine problems. An engine should not be disassembled to determine the cause of low compression unless some malfunction is present.**

DIAGNOSIS AND TESTING - ENGINE OIL LEAK INSPECTION

Begin with a thorough visual inspection of the engine, particularly at the area of the suspected leak. If an oil leak source is not readily identifiable, the following steps should be followed:

(1) Do not clean or degrease the engine at this time because some solvents may cause rubber to swell, temporarily stopping the leak.

(2) Add an oil soluble dye (use as recommended by manufacturer). Start the engine and let idle for approximately 15 minutes. Check the oil dipstick to make sure the dye is thoroughly mixed as indicated with a bright yellow color under a black light.

(3) Using a black light, inspect the entire engine for fluorescent dye, particularly at the suspected area of oil leak. If the oil leak is found and identified, repair as necessary.

(4) If dye is not observed, drive the vehicle at various speeds for approximately 24 km (15 miles), and repeat inspection.

(5) **If the oil leak source is not positively identified at this time**, proceed with the air leak detection test method as follows:

- Disconnect the fresh air hose (make-up air) at the cylinder head cover and plug or cap the nipple on the cover.
- Remove the PCV valve hose from the cylinder head cover. Cap or plug the PCV valve nipple on the cover.
- Attach an air hose with pressure gauge and regulator to the dipstick tube.

CAUTION: Do not subject the engine assembly to more than 20.6 kpa (3 PSI) of test pressure.

- Gradually apply air pressure from 1 psi to 2.5 psi maximum while applying soapy water at the suspected source. Adjust the regulator to the suitable test pressure that provides the best bubbles which will pinpoint the leak source. If the oil leak is detected and identified, repair per service manual procedures.
- If the leakage occurs at the crankshaft rear oil seal area, refer to the section, Inspection for Rear Seal Area Leak.

(6) If no leaks are detected, turn off the air supply. Remove the air hose, all plugs, and caps. Install the PCV valve and fresh air hose (make-up air). Proceed to next step.

(7) Clean the oil off the suspect oil leak area using a suitable solvent. Drive the vehicle at various speeds approximately 24 km (15 miles). Inspect the engine for signs of an oil leak by using a black light.

NOTE: If oil leakage is observed at the dipstick tube to block location; remove the tube, clean and reseal using Mopar® Stud & Bearing Mount (press fit tube applications only), and for O-ring style tubes, remove tube and replace the O-ring seal.

INSPECTION FOR REAR SEAL AREA LEAKS

Since it is sometimes difficult to determine the source of an oil leak in the rear seal area of the engine, a more involved inspection is necessary. The following steps should be followed to help pinpoint the source of the leak.

If the leakage occurs at the crankshaft rear oil seal area:

(1) Disconnect the battery.

(2) Raise the vehicle.

(3) Remove torque converter or clutch housing cover and inspect rear of block for evidence of oil. Use a black light to check for the oil leak. If a leak is present in this area, remove transmission for further inspection.

(a) Circular spray pattern generally indicates seal leakage or crankshaft damage.

(b) Where leakage tends to run straight down, possible causes are a porous block, oil gallery cup plug, bedplate to cylinder block mating surfaces and seal bore. See proper repair procedures for these items.

(4) If no leaks are detected, pressurize the crankcase as previously described.

CAUTION: Do not exceed 20.6 kPa (3 psi).

ENGINE 2.0L DOHC (Continued)

(5) If the leak is not detected, very slowly turn the crankshaft and watch for leakage. If a leak is detected between the crankshaft and seal while slowly turning the crankshaft, it is possible the crankshaft seal surface is damaged. The seal area on the crankshaft could have minor nicks or scratches that can be polished out with emery cloth.

CAUTION: Use extreme caution when crankshaft polishing is necessary to remove minor nicks and scratches. The crankshaft seal flange is especially machined to complement the function of the rear oil seal.

(6) For bubbles that remain steady with shaft rotation, no further inspection can be done until disassembled.

(7) After the oil leak root cause and appropriate corrective action have been identified, replace component(s) as necessary.

STANDARD PROCEDURE

STANDARD PROCEDURE - REPAIR OF DAMAGED OR WORN THREADS

Damaged or worn threads (excluding spark plug and camshaft bearing cap attaching threads) can be repaired. Essentially, this repair consists of drilling out worn or damaged threads, tapping the hole with a special Heli-Coil Tap, (or equivalent) and installing an insert into the tapped hole. This brings the hole back to its original thread size.

CAUTION: Be sure that the tapped holes maintain the original center line.

Heli-Coil tools and inserts are readily available from automotive parts jobbers.

STANDARD PROCEDURE - HYDROSTATIC LOCKED ENGINE

When an engine is suspected to be hydrostatically locked, regardless of what caused the problem, the following steps should be used.

CAUTION: DO NOT use starter motor to rotate the engine, severe damage may occur.

(1) Inspect air cleaner, induction system and intake manifold to insure system is dry and clear of foreign material.

(2) Remove negative battery cable.

(3) Place a shop towel around the spark plugs when removing them from the engine. This will catch any fluid that may possibly be in the cylinder under pressure.

(4) With all spark plugs removed, rotate engine crankshaft using a breaker bar and socket.

(5) Identify the fluid in the cylinder(s) (i.e., coolant, fuel, oil or other).

(6) Make sure all fluid has been removed from the cylinders. Inspect engine for damage (i.e., connecting rods, pistons, valves, etc.)

(7) Repair engine or components as necessary to prevent this problem from re-occurring.

CAUTION: Squirt approximately one teaspoon of oil into the cylinders, rotate engine to lubricate the cylinder walls to prevent damage on restart.

(8) Install new spark plugs.

(9) Drain engine oil and remove oil filter.

(10) Install a new oil filter.

(11) Fill engine with specified amount of approved oil.

(12) Connect negative battery cable.

(13) Start engine and check for any leaks.

STANDARD PROCEDURE - FORM-IN-PLACE GASKETS AND SEALERS

There are numerous places where form-in-place gaskets are used on the engine. Care must be taken when applying form-in-place gaskets to assure obtaining the desired results. **Do not use form-in-place gasket material unless specified.** Bead size, continuity, and location are of great importance. Too thin a bead can result in leakage while too much can result in spill-over which can break off and obstruct fluid feed lines. A continuous bead of the proper width is essential to obtain a leak-free gasket.

There are numerous types of form-in-place gasket materials that are used in the engine area. Mopar® Engine RTV GEN II, Mopar® ATF-RTV, and Mopar® Gasket Maker gasket materials, each have different properties and can not be used in place of the other.

MOPAR® ENGINE RTV GEN II is used to seal components exposed to engine oil. This material is a specially designed black silicone rubber RTV that retains adhesion and sealing properties when exposed to engine oil. Moisture in the air causes the material to cure. This material is available in three ounce tubes and has a shelf life of one year. After one year this material will not properly cure. Always inspect the package for the expiration date before use.

MOPAR® ATF RTV is a specifically designed black silicone rubber RTV that retains adhesion and sealing properties to seal components exposed to automatic transmission fluid, engine coolants, and moisture. This material is available in three ounce tubes and has a shelf life of one year. After one year

ENGINE 2.0L DOHC (Continued)

this material will not properly cure. Always inspect the package for the expiration date before use.

MOPAR® GASKET MAKER is an anaerobic type gasket material. The material cures in the absence of air when squeezed between two metallic surfaces. It will not cure if left in the uncovered tube. The anaerobic material is for use between two machined surfaces. Do not use on flexible metal flanges.

MOPAR® BED PLATE SEALANT is a unique (green-in-color) anaerobic type gasket material that is specially made to seal the area between the bedplate and cylinder block without disturbing the bearing clearance or alignment of these components. The material cures slowly in the absence of air when torqued between two metallic surfaces, and will rapidly cure when heat is applied.

MOPAR® GASKET SEALANT is a slow drying, permanently soft sealer. This material is recommended for sealing threaded fittings and gaskets against leakage of oil and coolant. Can be used on threaded and machined parts under all temperatures. This material is used on engines with multi-layer steel (MLS) cylinder head gaskets. This material also will prevent corrosion. Mopar® Gasket Sealant is available in a 13 oz. aerosol can or 4oz./16 oz. can w/applicator.

SEALER APPLICATION

Mopar® Gasket Maker material should be applied sparingly 1 mm (0.040 in.) diameter or less of sealant to one gasket surface. Be certain the material surrounds each mounting hole. Excess material can easily be wiped off. Components should be torqued in place within 15 minutes. The use of a locating dowel is recommended during assembly to prevent smearing material off the location.

Mopar® Engine RTV GEN II or ATF RTV gasket material should be applied in a continuous bead approximately 3 mm (0.120 in.) in diameter. All mounting holes must be circled. For corner sealing, a 3.17 or 6.35 mm (1/8 or 1/4 in.) drop is placed in the center of the gasket contact area. Uncured sealant may be removed with a shop towel. Components should be torqued in place while the sealant is still wet to the touch (within 10 minutes). The usage of a locating dowel is recommended during assembly to prevent smearing material off the location.

Mopar® Gasket Sealant in an aerosol can should be applied using a thin, even coat sprayed completely over both surfaces to be joined, and both sides of a gasket. Then proceed with assembly. Material in a can w/applicator can be brushed on evenly over the sealing surfaces. Material in an aerosol can should be used on engines with multi-layer steel gaskets.

STANDARD PROCEDURE - ENGINE GASKET SURFACE PREPARATION

To ensure engine gasket sealing, proper surface preparation must be performed, especially with the use of aluminum engine components and multi-layer steel cylinder head gaskets.

Never use the following to clean gasket surfaces:

- Metal scraper
- Abrasive pad or paper to clean cylinder block and head
- High speed power tool with an abrasive pad or a wire brush (Fig. 3)

NOTE: Multi-Layer Steel (MLS) head gaskets require a scratch free sealing surface.

Only use the following for cleaning gasket surfaces:

- Solvent or a commercially available gasket remover
- Plastic or wood scraper (Fig. 3)
- Drill motor with 3M Roloc™ Bristle Disc (white or yellow) (Fig. 3)

CAUTION: Excessive pressure or high RPM (beyond the recommended speed), can damage the sealing surfaces. The mild (white, 120 grit) bristle disc is recommended. If necessary, the medium (yellow, 80 grit) bristle disc may be used on cast iron surfaces with care.

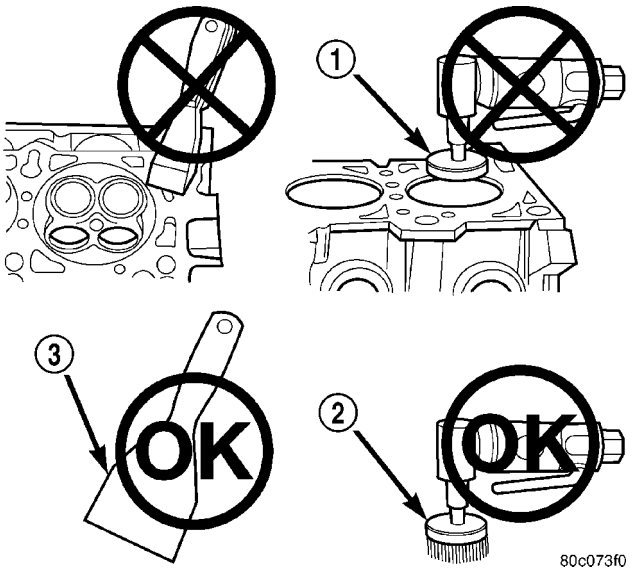

Fig. 3 Proper Tool Usage For Surface Preparation

1 - ABRASIVE PAD
2 - 3M ROLOC™ BRISTLE DISC
3 - PLASTIC/WOOD SCRAPER

ENGINE 2.0L DOHC (Continued)

STANDARD PROCEDURE - ENGINE CORE AND OIL GALLERY PLUGS

Using a blunt tool such as a drift and a hammer, strike the bottom edge of the cup plug. With the cup plug rotated, grasp firmly with pliers or other suitable tool and remove plug (Fig. 4).

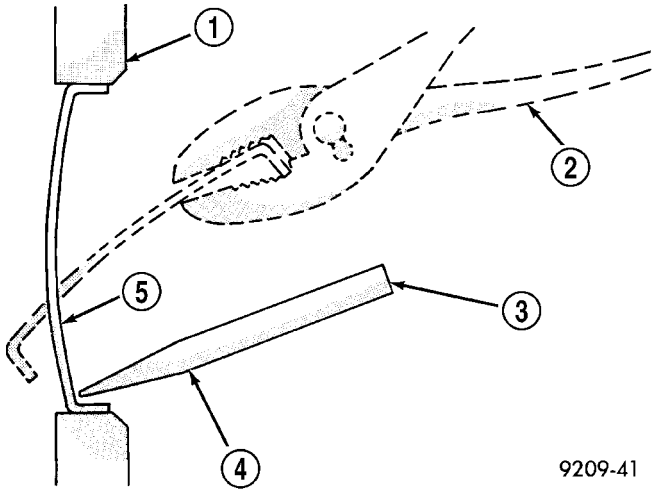

Fig. 4 Core Hole Plug Removal

1 - CYLINDER BLOCK
2 - REMOVE PLUG WITH PLIERS
3 - STRIKE HERE WITH HAMMER
4 - DRIFT PUNCH
5 - CUP PLUG

CAUTION: Do not drive cup plug into the casting as restricted cooling can result and cause serious engine problems.

Thoroughly clean inside of cup plug hole in cylinder block or head. Be sure to remove old sealer. Lightly coat inside of cup plug hole with Mopar® Stud and Bearing Mount. Make certain the new plug is cleaned of all oil or grease. Using proper drive plug, drive plug into hole so that the sharp edge of the plug is at least 0.5 mm (0.020 in.) inside the lead-in chamfer.

It is not necessary to wait for curing of the sealant. The cooling system can be refilled and the vehicle placed in service immediately.

STANDARD PROCEDURE - MEASURING BEARING CLEARANCE USING PLASTIGAGE

Engine crankshaft bearing clearances can be determined by use of Plastigage or equivalent. The following is the recommended procedure for the use of Plastigage:

(1) Remove oil film from surface to be checked. Plastigage is soluble in oil.

(2) Place a piece of Plastigage across the entire width of the bearing shell in the cap approximately 6.35 mm (1/4 in.) off center and away from the oil holes (Fig. 5). (In addition, suspected areas can be checked by placing the Plastigage in the suspected area). Torque the bearing cap bolts of the bearing being checked to the proper specifications.

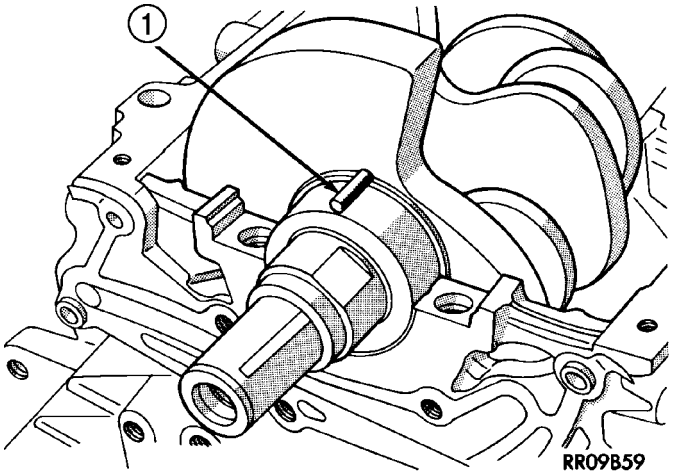

Fig. 5 Plastigage Placed in Lower Shell—Typical

1 - PLASTIGAGE

(3) Remove the bearing cap and compare the width of the flattened Plastigage with the metric scale provided on the package. Locate the band closest to the same width. This band shows the amount of clearance in thousandths of a millimeter. Differences in readings between the ends indicate the amount of taper present. Record all readings taken. Compare clearance measurements to specs found in engine specifications (Refer to 9 - ENGINE - SPECIFICATIONS). **Plastigage generally is accompanied by two scales. One scale is in inches, the other is a metric scale.**

NOTE: Plastigage is available in a variety of clearance ranges. Use the most appropriate range for the specifications you are checking.

(4) Install the proper crankshaft bearings to achieve the specified bearing clearances.

REMOVAL - ENGINE ASSEMBLY

(1) Perform fuel pressure release procedure, then disconnect and remove fuel line (Refer to 14 - FUEL SYSTEM/FUEL DELIVERY - STANDARD PROCEDURE).

(2) Remove air cleaner housing assembly and clean air hose (Refer to 9 - ENGINE/AIR INTAKE SYSTEM/AIR CLEANER HOUSING - REMOVAL).

(3) Disconnect both cables from battery.

(4) Remove battery and battery tray (Refer to 8 - ELECTRICAL/BATTERY SYSTEM/BATTERY - REMOVAL).

(5) Drain cooling system (Refer to 7 - COOLING/ENGINE - STANDARD PROCEDURE).

ENGINE 2.0L DOHC (Continued)

(6) Discharge air conditioning system, if equipped (Refer to 24 - HEATING & AIR CONDITIONING - STANDARD PROCEDURE).

(7) Disconnect throttle and speed control cables from throttle body.

(8) Disconnect engine wiring harness at Powertrain Control Module (PCM).

(9) Disconnect positive cable from Power Distribution Center (PDC) and ground wire from vehicle body. Remove bolts attaching PDC and set aside (Fig. 6).

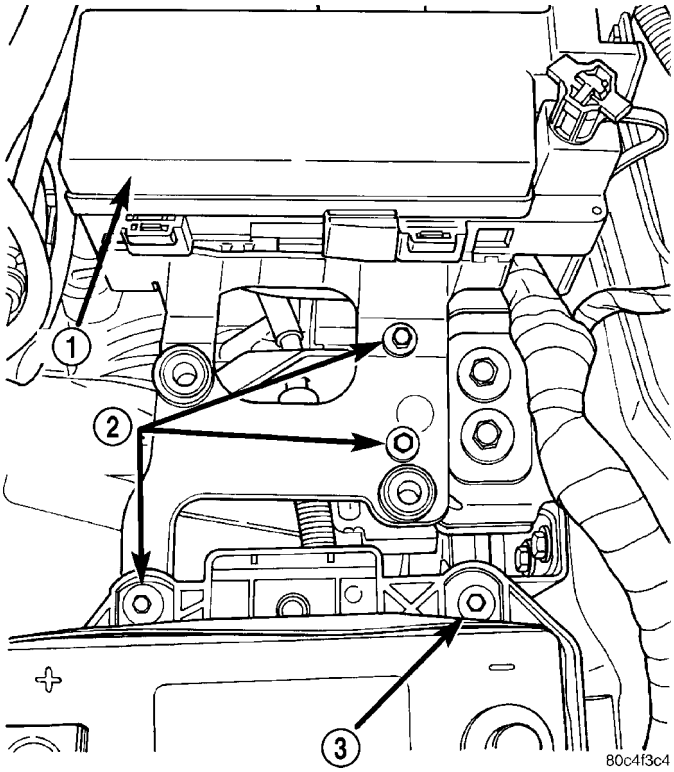

Fig. 6 PDC Bracket Attaching Bolts

1 - PDC
2 - PDC BRACKET BOLTS
3 - BATTERY TRAY BOLT

(10) Disconnect wiring connectors at lower battery tray support.

(11) Disconnect ground wire from the vehicle body-to-engine at the right side strut tower.

(12) Disconnect brake booster vacuum hose from intake manifold.

(13) Disconnect the proportional purge hose from throttle body.

(14) Disconnect coolant reserve/recovery hose from coolant outlet connector.

(15) Disconnect heater hoses.

(16) Remove grille (Refer to 23 - BODY/EXTERIOR/GRILLE - REMOVAL).

(17) Remove upper radiator closure panel and center brace(Refer to 23 - BODY/EXTERIOR/RADIATOR CLOSURE PANEL - REMOVAL) (Fig. 7).

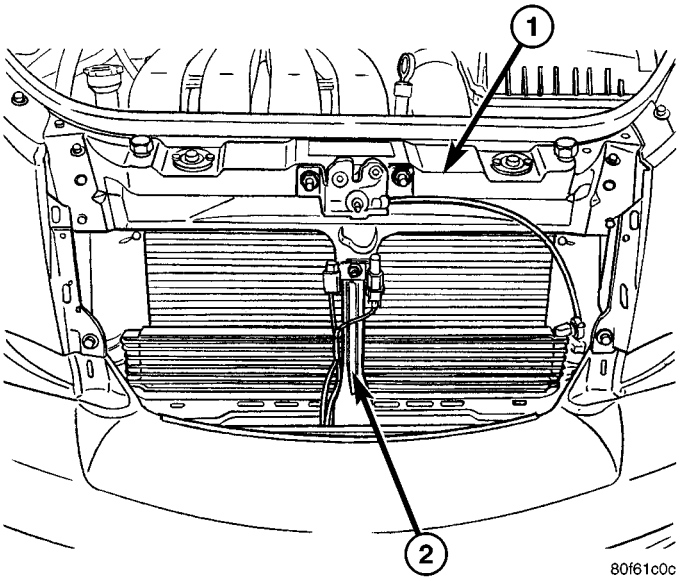

Fig. 7 Upper Radiator Closure Panel and Center Brace

1 - UPPER RADIATOR CLOSURE PANEL
2 - CENTER BRACE

(18) Remove upper radiator hose.

(19) Remove lower radiator hose.

(20) Disconnect upper A/C line from A/C condenser.

(21) Disconnect A/C lines at junction near upper torque strut.

(22) **Automatic Transmission equipped vehicles:**

(a) Using a blade or suitable hose cutter, cut transaxle oil cooler lines off flush with transmission fittings. Plug lines and fittings to prevent debris from entering transaxle or cooler circuit. A service splice kit will be installed upon reassembly.

(b) Disconnect transmission electrical connectors.

(c) Disconnect transmission shift linkage.

(23) **Manual Transmission equipped vehicles:**

(a) Using Special Tool 6638A, disconnect clutch hydraulic line (Fig. 8) and (Fig. 9).

(b) Disconnect transmission shift linkage.

(c) Disconnect transmission electrical connectors.

(24) Disconnect radiator fan electrical connector and remove cooling module assembly (fan, radiator, A/C condenser, transmission oil cooler).

(25) Hoist vehicle and remove front wheels.

(26) Remove right inner splash shield.

(27) Remove axle shafts (Refer to 3 - DIFFERENTIAL & DRIVELINE/HALF SHAFT - REMOVAL).

(28) Remove accessory drive belts (Refer to 7 - COOLING/ACCESSORY DRIVE/DRIVE BELTS - REMOVAL).

(29) Remove generator and support brackets.

(30) Drain engine oil.

ENGINE 2.0L DOHC (Continued)

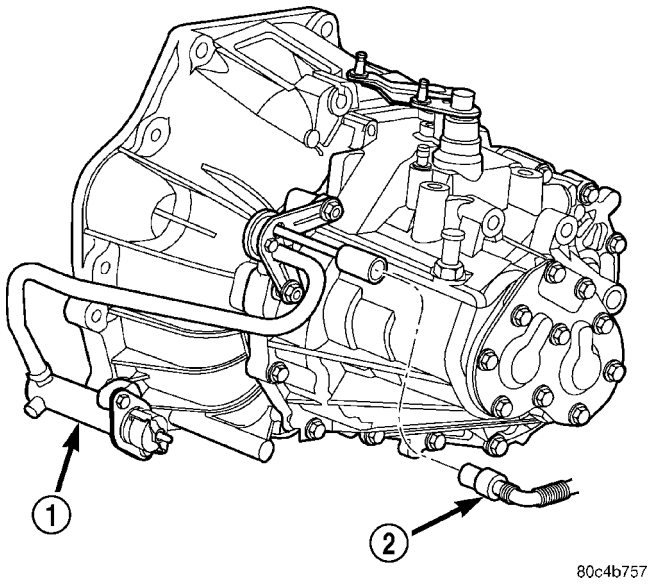

Fig. 8 Clutch Slave Cylinder Connection

1 - SLAVE CYLINDER
2 - HYDRAULIC TUBE

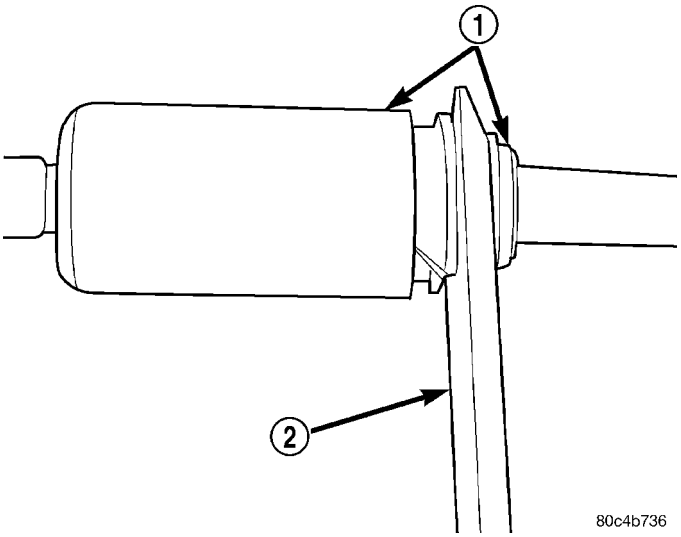

Fig. 9 Disconnect Clutch Hydraulic Quick-Connect using Tool 6638A

1 - QUICK CONNECT FITTING
2 - TOOL 6638A

(31) Disconnect the downstream oxygen sensor connector.

(32) Disconnect exhaust system from manifold (Fig. 10).

(33) Disconnect power steering pressure hose from steering gear (Fig. 11).

(34) Remove structural collar (Refer to 9 - ENGINE/ENGINE BLOCK/STRUCTURAL COLLAR - REMOVAL).

(35) **Automatic Transmission equipped vehicles:**

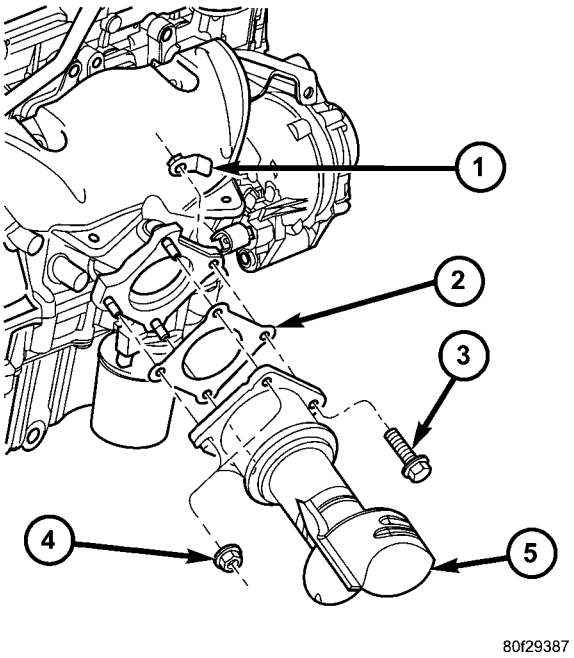

Fig. 10 Converter to Exhaust Manifold Connection - 2.0L

1 - FLAG NUT
2 - GASKET
3 - BOLT
4 - NUT
5 - CATALYTIC CONVERTER

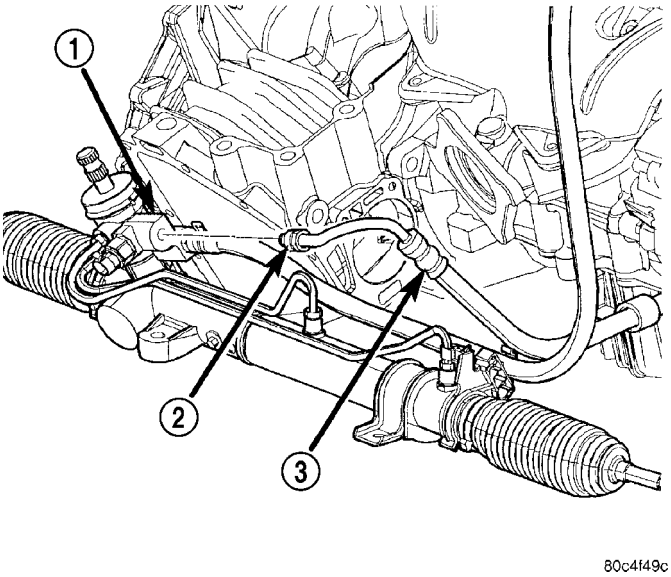

Fig. 11 Power Steering Fluid Pressure Hose

1 - STEERING GEAR
2 - FITTING
3 - POWER STEERING PRESSURE HOSE

(a) Remove torque converter bolts and mark converter to flex plate orientation for reassembly.

(36) **Manual Transmission equipped vehicles:**

(a) Remove drive plate to clutch module bolts.

ENGINE 2.0L DOHC (Continued)

(37) Remove lower engine torque strut (Refer to 9 - ENGINE/ENGINE MOUNTING/TORQUE STRUT - REMOVAL).

(38) Lower vehicle and remove A/C compressor.

(39) Disconnect power steering lines from power steering pump.

(40) Remove power steering pump.

(41) Raise vehicle enough to allow engine dolly, cradle, and posts, (Special Tools 6135, 6710, and 6848) to be installed under vehicle. For Special Tool identification (Refer to 9 - ENGINE - SPECIAL TOOLS).

(42) Loosen engine support posts to allow movement for positioning onto engine locating holes and flange on the engine bedplate. Lower vehicle and position cradle until the engine is resting on support posts (Fig. 14). Tighten mounts to cradle frame. This will keep support posts from moving when removing or installing engine and transmission.

(43) Install safety straps around the engine to cradle (Fig. 14). Tighten straps and lock them into position.

WARNING: Safety straps MUST be used.

(44) Raise vehicle enough to determine if straps are secure enough to hold cradle assembly to engine.

(45) Lower vehicle so weight of the engine and transmission ONLY is on the cradle assembly.

(46) Remove the upper engine torque strut.

(47) Remove right mount through bolt (Fig. 12) and left mount attaching bolts (Fig. 13).

(48) Raise vehicle slowly until engine/transaxle assembly clears engine compartment. It may be necessary to move the engine/transmission assembly with the cradle to allow for removal around body flanges.

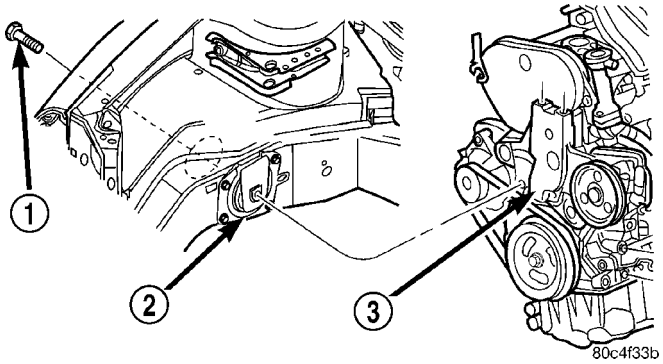

Fig. 12 Right Mount Through Bolt

1 - BOLT
2 - RIGHT ENGINE MOUNT
3 - ENGINE MOUNT BRACKET

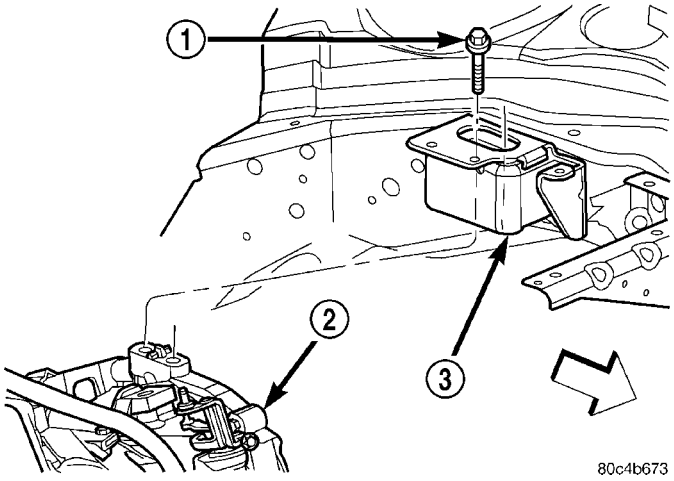

Fig. 13 Transaxle Upper Mount Bolts—Typical

1 - BOLT
2 - TRANSAXLE
3 - LEFT MOUNT

INSTALLATION - ENGINE ASSEMBLY

(1) Position engine and transmission assembly under vehicle and slowly lower the vehicle over the engine/transaxle assembly.

(2) Continue lowering vehicle until engine/transaxle aligns to mounting locations. Install mounting bolts at the right and left engine/transaxle mounts (Fig. 12) and (Fig. 13). Tighten bolts to 118 N·m (87 ft. lbs.).

(3) Install upper engine torque strut.

(4) Remove safety straps from engine/transaxle assembly. Slowly raise vehicle enough to remove the engine dolly and cradle.

(5) Install power steering pump.

(6) Connect power steering lines to power steering pump.

(7) Install A/C compressor.

(8) Install lower engine torque strut (Refer to 9 - ENGINE/ENGINE MOUNTING/TORQUE STRUT - INSTALLATION).

(9) **Automatic Transmission equipped vehicles:**

(a) Install torque converter bolts.

(10) **Manual Transmission equipped vehicles:**

(a) Install drive plate to clutch module bolts.

(11) Install structural collar (Refer to 9 - ENGINE/ENGINE BLOCK/STRUCTURAL COLLAR - INSTALLATION).

(12) Connect power steering fluid pressure hose to steering gear (Fig. 11).

(13) Connect exhaust system to manifold (Fig. 10).

(14) Connect the downstream oxygen sensor.

(15) Install generator and mounting brackets.

(16) Install accessory drive belts (Refer to 7 - COOLING/ACCESSORY DRIVE/DRIVE BELTS - INSTALLATION).

ENGINE 2.0L DOHC (Continued)

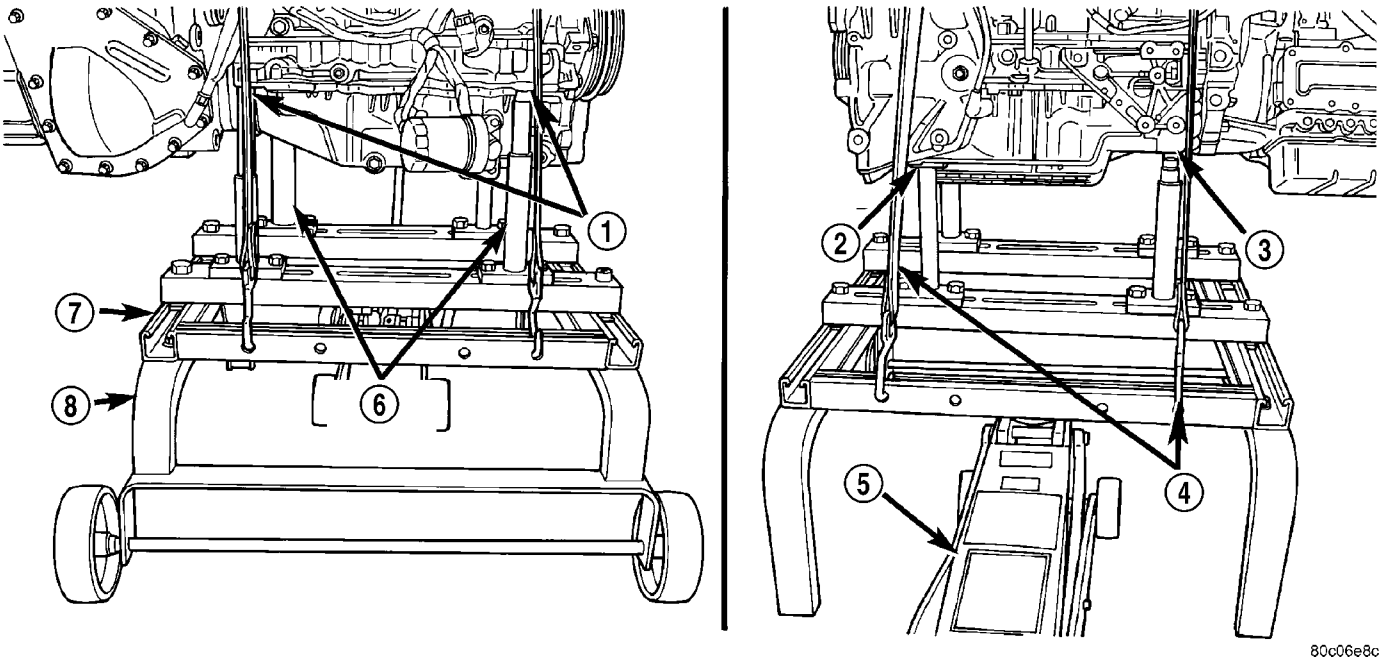

Fig. 14 Positioning Engine Cradle Support Post

1 - POST LOCATING HOLES IN BLOCK
2 - POST POSITIONED UNDER BRACKET
3 - POST LOCATING HOLE IN STRUT
4 - SAFETY STRAPS
5 - FLOOR JACK
6 - SPECIAL TOOL 6848
7 - SPECIAL TOOL 6135
8 - SPECIAL TOOL 6710

(17) Install axle shafts (Refer to 3 - DIFFERENTIAL & DRIVELINE/HALF SHAFT - INSTALLATION).

(18) Install inner splash shield.

(19) Install wheels and lower vehicle.

(20) Install cooling module assembly (fan, radiator, A/C condenser, transmission oil cooler). Connect radiator fan electrical connector.

(21) **Manual Transmission equipped vehicles:**

(a) Connect clutch hydraulic line (Fig. 8).

(b) Connect transmission shift linkage.

(c) Connect transmission electrical connectors.

NOTE: It is not necessary to bleed the clutch hydraulic system. The quick-connect fittings close immediately after disconnection; allowing no fluid to escape.

(22) **Automatic Transmission equipped vehicles:**

(a) Connect transmission oil cooler lines using service splice kit. Refer to instructions provided with kit.

(b) Connect transmission electrical connectors.

(c) Connect transmission shift linkage.

(23) Connect A/C lines at junction near upper torque strut.

(24) Connect upper A/C line to A/C condenser.

(25) Install upper and lower radiator hoses.

(26) Install upper radiator closure panel and center brace (Refer to 23 - BODY/EXTERIOR/RADIATOR CLOSURE PANEL - INSTALLATION) (Fig. 7).

(27) Install grille (Refer to 23 - BODY/EXTERIOR/GRILLE - INSTALLATION).

(28) Connect fuel line and heater hoses.

(29) Connect coolant reserve/recovery hose to coolant outlet connector.

(30) Connect brake booster vacuum hose to intake manifold.

(31) Connect the proportional purge hose to throttle body.

(32) Install all ground straps and connect engine wiring harness.

(33) Position PDC and install bolts (Fig. 6). Connect positive battery cable to PDC and ground wire to vehicle body.

(34) Connect engine wiring harness at Powertrain Control Module (PCM).

(35) Connect throttle and speed control cables.

(36) Install battery tray and battery (Refer to 8 - ELECTRICAL/BATTERY SYSTEM/BATTERY - INSTALLATION).

(37) Connect cables to battery.

(38) Install air cleaner housing assembly and connect clean air hose (Refer to 9 - ENGINE/AIR INTAKE SYSTEM/AIR CLEANER HOUSING - INSTALLATION).

ENGINE 2.0L DOHC (Continued)

(39) Install oil filter. Fill engine crankcase with proper oil to correct level.

(40) Fill power steering system.

(41) Fill cooling system (Refer to 7 - COOLING/ ENGINE - STANDARD PROCEDURE).

(42) Evacuate and recharge A/C system (Refer to 24 - HEATING & AIR CONDITIONING - STANDARD PROCEDURE).

(43) Start engine and run until operating temperature is reached.

(44) Perform torque strut adjustment procedure (Refer to 9 - ENGINE/ENGINE MOUNTING/ TORQUE STRUT - ADJUSTMENTS).

(45) Adjust transmission linkage, if necessary.

SPECIFICATIONS

2.0L DOHC ENGINE

DESCRIPTION	SPECIFICATION
General Specification	
Type	In-Line OHV, DOHC
Number of Cylinders	4
Displacement	2.0 Liters (122 cu. in.)
Bore	87.5 mm (3.445 in.)
Stroke	83.0 mm (3.268 in.)
Compression Ratio	9.6:1
Firing Order	1-3-4-2
Compression Pressure	1172–1551 kPa (170–225 psi)
Max. Variation Between Cylinders	25%
Cylinder Block	
Cylinder Bore Diameter	87.4924–87.5076 mm (3.4446–3.4452 in.)
Out-of-Round (Max.)	0.051 mm (0.002 in.)
Taper (Max.)	0.051 mm (0.002 in.)
Pistons	
Piston Diameter	87.463–87.481 mm (3.4434–3.4441 in.)
Clearance @ 17.5 mm (11/16 in.) from bottom of skirt	0.018–0.050 mm (0.0007–0.0020 in.)
Weight	340–350 grams (11.99–12.34 oz.)
Land Clearance (Diametrical)	0.740–0.803 mm (0.029–0.031 in.)
Piston Length	64.8 mm (2.551 in.)
Piston Ring Groove Depth No. 1	3.983–4.132 mm (0.157–0.163 in.)
Piston Ring Groove Depth No. 2	4.456–4.605 mm (0.175–0.181 in.)
Piston Ring Groove Depth No. 3	3.841–4.075 mm (0.151–0.160 in.)
Piston Pins	
Clearance in Piston	0.008–0.020 mm (0.0003–0.0008 in.)
Clearance in Connecting Rod	Interference
Diameter	20.998–21.003 mm (0.8267–0.8269 in.)
End Play	None
Length	74.75–75.25 mm (2.943–2.963 in.)
Piston Rings	
Ring Gap—Top Compression Ring	0.23–0.52 mm (0.009–0.020 in.)
Wear Limit	0.8 mm (0.031 in.)
Ring Gap—2nd Compression Ring	0.49–0.78 mm (0.019–0.031 in.)
Wear Limit	0.8 mm (0.031 in.)
Ring Gap—Oil Control Steel Rails	0.23–0.66 mm (0.009–0.026 in.)
Wear Limit	1.0 mm (0.039 in.)
Ring Side Clearance—Compression Rings	0.025–0.065 mm (0.0010–0.0026 in.)
Wear Limit	0.10 mm (0.004 in.)

ENGINE 2.0L DOHC (Continued)

DESCRIPTION	SPECIFICATION
Ring Side Clearance—Oil Ring Pack	0.004–0.178 mm (0.0002–0.0070 in.)
Ring Width—Compression Rings	1.17–1.19 mm (0.046–0.047 in.)
Ring Width—Oil Ring Pack	2.854–3.008 mm (0.1124–0.1184 in.)
Connecting Rod	
Bearing Clearance	0.026–0.059 mm (0.001–0.0023 in.)
Wear Limit	0.075 mm (0.003 in.)
Bore Diameter—Piston Pin	20.96–20.98 mm (0.8252–0.8260 in.)
Bore Diameter—Crankshaft End	50.991–51.005 mm (2.0075–2.0081 in.)
Side Clearance	0.13–0.38 mm (0.005–0.015 in.)
Wear Limit	0.40 mm (0.016 in.)
Weight—Total (Less Bearing)	548.8 grams (19.36 oz.)
Crankshaft	
Connecting Rod Journal Diameter	47.9924–48.0076 mm (1.8894–1.8900 in.)
Main Bearing Journal Diameter	51.9924–52.0076 mm (2.0469–2.0475 in.)
Journal Out-of-Round (Max.)	0.0035 mm (0.0001 in.)
Journal Taper (Max.)	0.0038 mm (0.0001 in.)
End Play	0.09–0.27 mm (0.0035–0.0106 in.)
Wear Limit	0.37 mm (0.015 in.)
Main Bearing Diametrical Clearance	0.022–0.062 mm (0.0008–0.0024 in.)
Hydraulic Lash Adjuster	
Body Diameter	15.901–15.913 mm (0.626–0.6264 in.)
Plunger Travel Minimum (Dry)	3.0 mm (0.118 in.)

DESCRIPTION	SPECIFICATION
Cylinder Head Camshaft Bearing Bore Diameter	
Journals No.1–6	26.020–26.041 mm (1.024–1.025 in.)
Camshaft	
Journal Diameter No. 1–6	25.951–25.970 mm (1.021–1.022 in.)
Bearing Clearance—Diametrical	0.069–0.071 mm (0.0027–0.003 in.)
End Play	0.05–0.15 mm (0.002–0.006 in.)
Lift (Zero Lash)	
Intake	8.65 mm (0.340 in.)
Exhaust	7.95 mm (0.312 in.)
Intake Valve Timing*	
Closes (ABDC)	33.6°
Opens (BTDC)	3.8°
Duration	212.8°
Exhaust Valve Timing*	
Closes (BTDC)	1°
Opens (BBDC)	41.8°
Duration	220.8°
Valve Overlap	0°
*All readings in crankshaft degrees, at 0.5 mm (0.019 in.) of valve lift.	
Cylinder Head	
Material	Cast Aluminum
Gasket Thickness (Compressed)	0.71 mm (0.028 in.)
Valve Seat	
Angle	44.5°- 45°
Seat Diameter—Intake	34.37 - 34.63mm (1.353 - 1.363in.)
Seat Diameter—Exhaust	27.06 - 27.32mm (1.065 - 1.075in.)
Runout (Max.)	0.05 mm (0.002 in.)
Valve Seat Width—Intake and Exhaust	0.9–1.3 mm (0.035–0.051 in.)

ENGINE 2.0L DOHC (Continued)

DESCRIPTION	SPECIFICATION
Service Limit—Intake	2.0 mm (0.079 in.)
Service Limit—Exhaust	2.5 mm (0.098 in.)
Valve Guide	
Diameter I.D.	5.975–6.000 mm (0.235–0.236 in.)
Guide Bore Diameter	11.0–11.02 mm (0.4330–0.4338 in.)
Guide Height (spring seat to guide tip)	13.25–13.75 mm (0.521–0.541 in.)
Valves	
Face Angle—Intake and Exhaust	44.5—45°
Head Diameter—Intake	34.67–34.93 mm 1.364–1.375 in.)
Head Diameter—Exhaust	28.32–28.52 mm (1.114–1.122 in.)
Valve Length (Overall)	
—Intake	112.76–113.32 mm (4.439–4.461 in.)
—Exhaust	110.89–111.69 mm (4.365–4.397 in.)
Valve Stem Diameter	
—Intake	5.934–5.952 mm (0.2337–0.2344 in.)
—Exhaust	5.906–5.924 mm (0.2326–0.2333 in.)
Valve Margin	
Intake	1.200–1.700 mm (0.047–0.066
Service Limit	0.95 mm (1/32 in.)
Exhaust	0.985–1.315 mm (0.038–0.051 in.)
Service Limit	1.05 mm (3/64 in.)
Valve Stem Tip Height	
Intake	48.04 mm (1.891 in.)

DESCRIPTION	SPECIFICATION
Exhaust	47.99 mm (1.889 in.)
Valve Stem to Guide Clearance	
Intake	0.048–0.066 mm (0.0018–0.0025 in.)
Max. Allowable	0.076 mm (0.003 in.)
Exhaust	0.0736–0.094 mm (0.0029–0.0037 in.)
Max. Allowable	0.101 mm (0.004 in.)
Valve Springs	
Free Length (Approx.)	49.3 mm (1.940 in.)
Nominal Force (Valve Closed)	245–328 N @ 38.0 mm (66–74 lbs. @ 1.496 in.)
Nominal Force (Valve Open)	565–627 N @ 29.3 mm (127–141 lbs. @ 1.53 in.)
Installed Height	36.93 - 38.93mm (1.453 - 1.532in.)
Number of Coils	7.80
Wire Diameter	3.61 mm (0.142 in.)
Oil Pump	
Clearance Over Rotors (Max.)	0.10 mm (0.004 in.)
Cover Out-of-Flat (Max.)	0.076 mm (0.003 in.)
Inner Rotor Thickness (Min.)	7.64 mm (0.301 in.)
Outer Rotor Thickness (Min.)	7.64 mm (0.301 in.)
Outer Rotor Clearance (Max.)	0.039 mm (0.015 in.)
Outer Rotor Diameter (Min.)	79.95 mm (3.148 in.)

ENGINE 2.0L DOHC (Continued)

DESCRIPTION	SPECIFICATION
Tip Clearance Between Rotors (Max.)	0.20 mm (0.008 in.)
Oil Pressure	
At Curb Idle Speed*	25 kPa (4 psi)
At 3000 rpm	170–550 kPa (25–80 psi)
CAUTION: *If pressure is ZERO at curb idle, DO NOT run engine at 3000 rpm.	

TORQUE

DESCRIPTION	N·m	Ft. Lbs.	In. Lbs.
Camshaft Sprocket—Bolt	115	85	—
Connecting Rod Cap—Bolts	27 +¼ turn	20 +¼ turn	—
Crankshaft Main Bearing Cap/Bedplate			
—M8 Bolts	34	25	—
—M11 Bolts	81	60	—
Crankshaft Damper	136	100	—
Cylinder Head—Bolts	Refer to Procedure		
Cylinder Head Cover—Bolts	12	—	105
Drive Plate to Crankshaft	95	70	—
Engine Mount Bracket Right—Bolts	61	45	—
Exhaust Manifold to Cylinder Head—Bolts	23	—	200
Exhaust Manifold Heat Shield—Bolts	12	—	105
Intake Manifold Upper—Bolts	12	—	105
Intake Manifold Lower—Bolts	12	—	105
Oil Filter	20	15	—
Oil Filter Adaptor	80	60	—
Oil Pan—Bolts	12	—	105
Oil Pan Drain—Plug	28	20	—
Oil Pump to Block—Bolts	28	20	—
Oil Pump Cover Plate—Bolts	12	—	105
Oil Pump Pick-up Tube—Bolt	23	—	200
Oil Pump Relief Valve—Cap	42	30	—
PCV Valve—Screw	8	—	70

DESCRIPTION	N·m	Ft. Lbs.	In. Lbs.
Spark Plugs	18	13	—
Timing Belt Covers			
—Front Cover Bolts	12	—	105
—Rear Cover Bolts	12	—	105
Timing Belt Tensioner Bracket—Mounting Bolts	31	23	—
Timing Belt Tensioner Lock Nut	30	22	—
Water Pump—Bolts	12	—	105

SPECIAL TOOLS

2.0L DOHC ENGINE

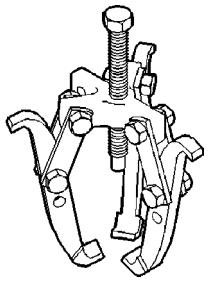

Puller 1026

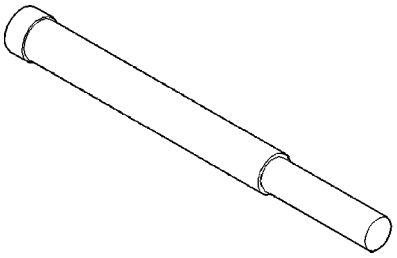

Crankshaft Damper Removal Insert 6827-A

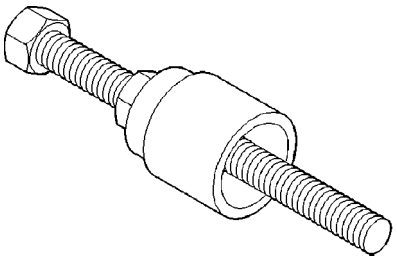

Crankshaft Damper/Sprocket Installer 6792

ENGINE 2.0L DOHC (Continued)

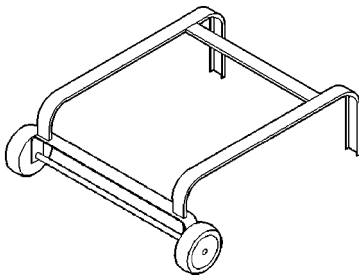

Dolly 6135

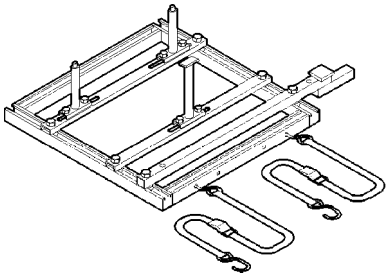

Cradle 6710

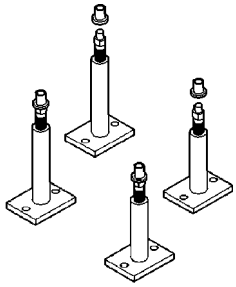

Post Kit Engine Cradle 6848

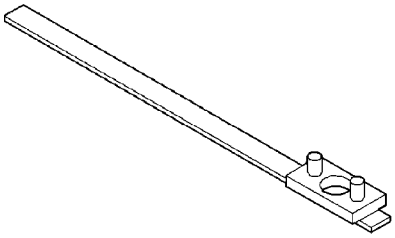

Camshaft Sprocket Remover/Installer C-4687

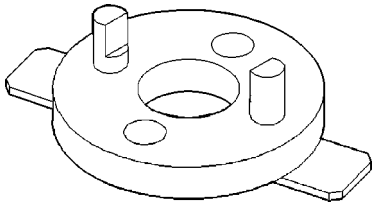

Camshaft Sprocket Remover/Installer Adapter C-4687-1

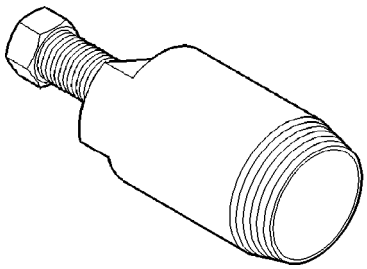

Camshaft Seal Remover C-4679A

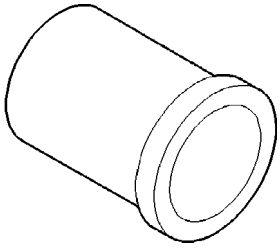

Camshaft Seal Installer MD-998306

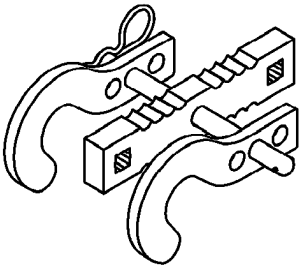

Valve Spring Compressor 8215-A

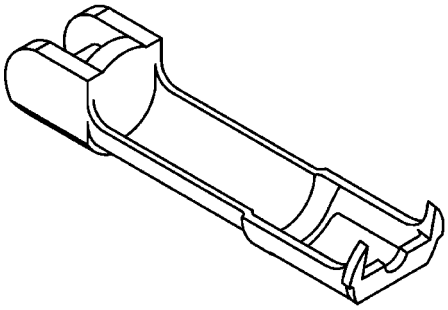

Adaptor 8436

ENGINE 2.0L DOHC (Continued)

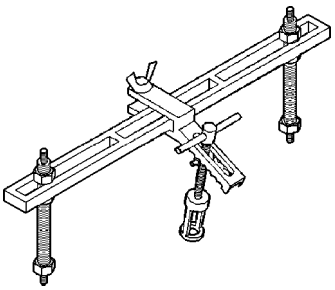

Valve Spring Compressor MD-998772-A

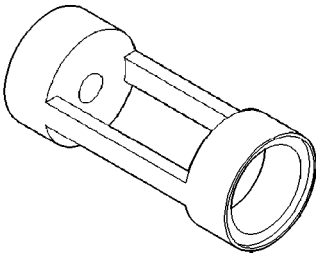

Valve Spring Compressor Adapter 6779

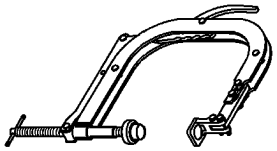

Valve Spring Compressor C-3422-D

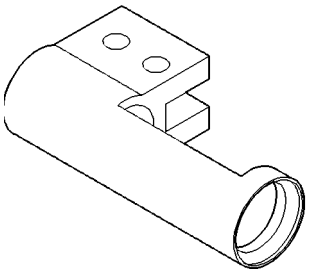

Spring Compressor Adaptor 6526

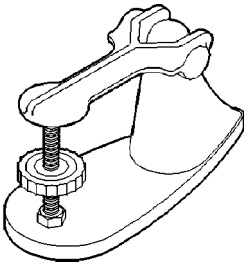

Valve Spring Tester C-647

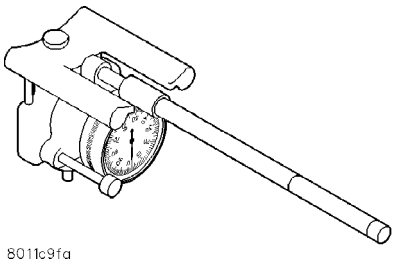

Cylinder Bore Gage C-119

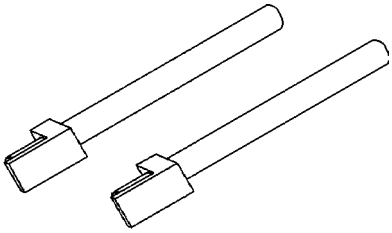

Connecting Rod Guides 8189

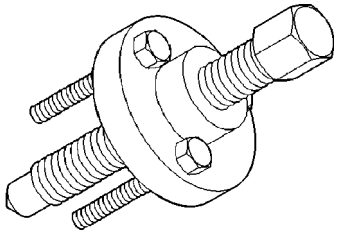

Crankshaft Sprocket Remover 6793

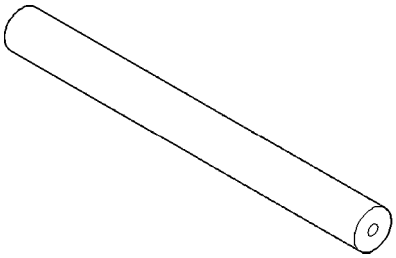

Crankshaft Sprocket Remover Insert C-4685-C2

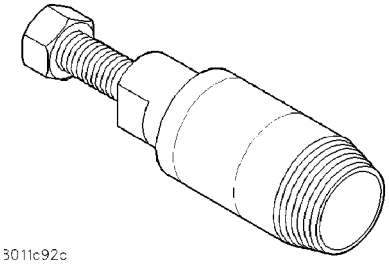

Crankshaft Seal Remover 6771

ENGINE 2.0L DOHC (Continued)

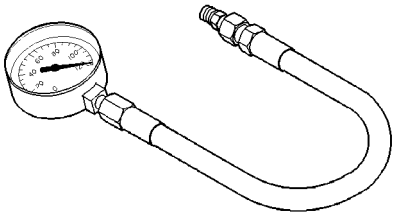

Oil Pressure Gage C-3292

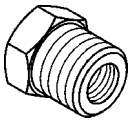

Adaptor 8406

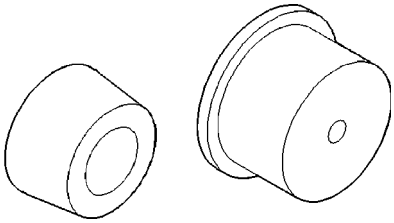

Rear Crankshaft Seal Guide and Installer 6926-1 and 6926-2

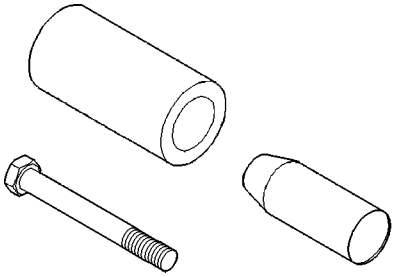

Front Crankshaft Oil Seal Installer 6780

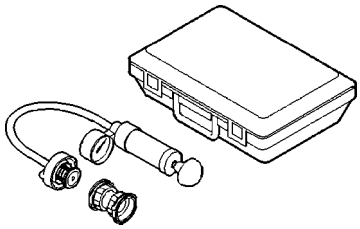

Cooling System Tester 7700

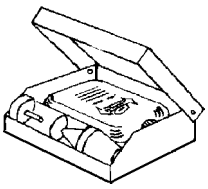

Combustion Leak Tester C-3685-A

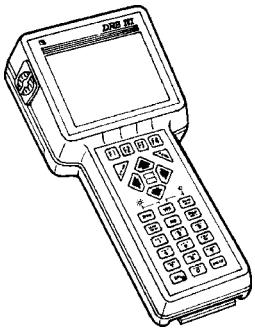

DRB III® with PEP Module OT-CH6010A

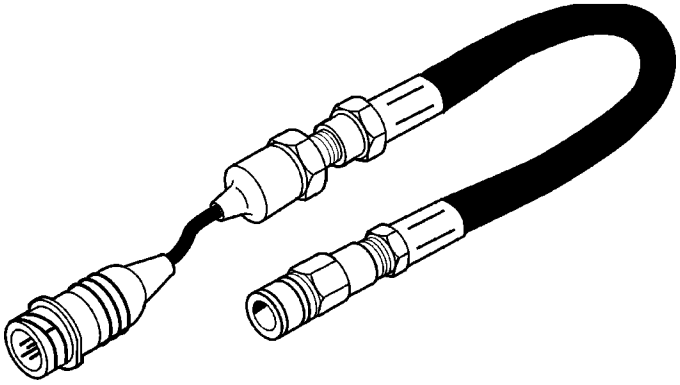

Pressure Transducer CH7059

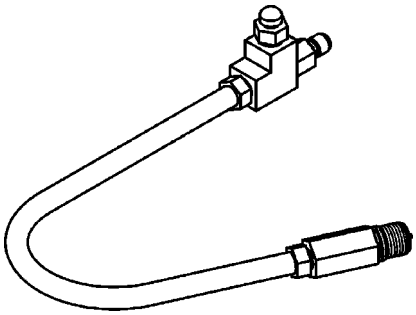

Cylinder Compression Pressure Adaptor 8116

AIR CLEANER ELEMENT

REMOVAL

(1) Unfasten clasps on sides of air cleaner housing cover. Lift cover off air cleaner housing (Fig. 15) .

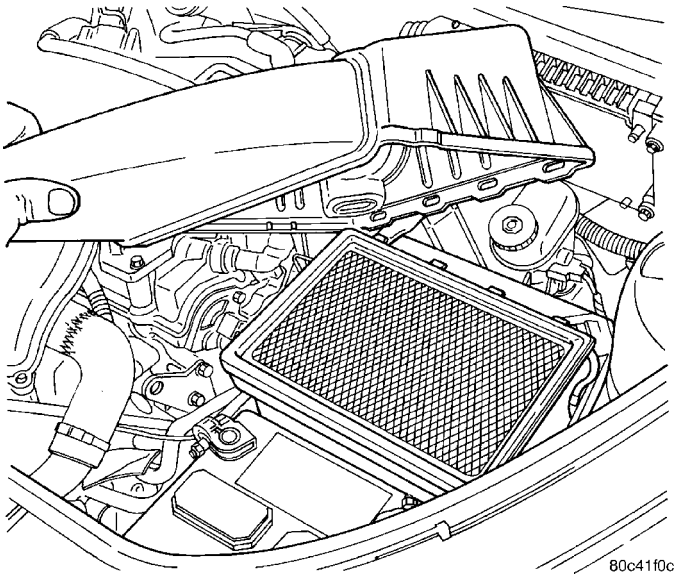

Fig. 15 Air Cleaner Cover

(2) Remove filter element.

(3) If necessary, clean the inside of the air cleaner housing.

INSTALLATION

(1) Install new filter element.

(2) Place cover over air cleaner housing. Snap clasps in place.

AIR CLEANER HOUSING

REMOVAL

(1) Disconnect the air inlet hose (Fig. 16).

(2) Pull air cleaner housing straight up to remove.

(3) Remove the inlet duct from the air cleaner housing.

INSTALLATION

The air cleaner housing attaches to the inner fender in front of the driver's side strut tower (Fig. 16). An ambient air duct supplies underhood air for the engine. It attaches to the lower air cleaner box.

Make sure that the rubber grommets, for the lower pins, are in place when reinstalling the air cleaner housing. The rubber grommet for the PDC bracket must be installed also (Fig. 16).

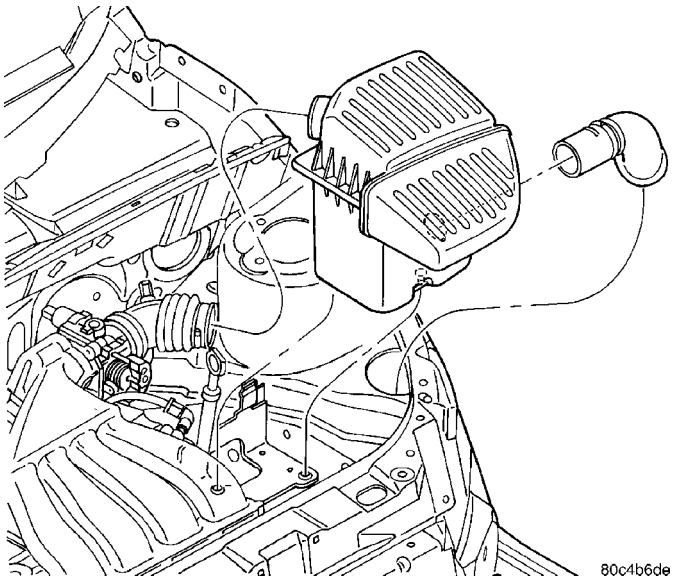

Fig. 16 Air Inlet System

CYLINDER HEAD

DESCRIPTION

The cross flow designed, aluminum cylinder head contains dual over-head camshafts with four valves per cylinder (Fig. 17). The valves are arranged in two in-line banks. The intake valves face toward the front of the vehicle. The exhaust valves face the dash panel. The cylinder head incorporates powdered metal valve guides and seats. The cylinder head is sealed to the block using a multi-layer steel head gasket and retaining bolts.

Integral oil galleries provide lubrication passages to the hydraulic lash adjusters, camshafts, and valve mechanisms.

DIAGNOSIS AND TESTING—CYLINDER HEAD GASKET

A cylinder head gasket leak can be located between adjacent cylinders or between a cylinder and the adjacent water jacket.

Possible indications of the cylinder head gasket leaking between adjacent cylinders are:

- Loss of engine power
- Engine misfiring
- Poor fuel economy

Possible indications of the cylinder head gasket leaking between a cylinder and an adjacent water jacket are:

- Engine overheating
- Loss of coolant
- Excessive steam (white smoke) emitting from exhaust
- Coolant foaming

CYLINDER HEAD (Continued)

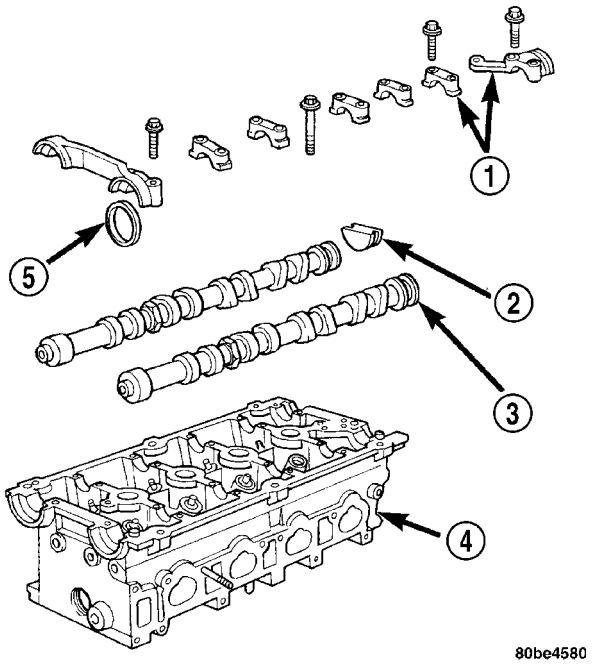

Fig. 17 Cylinder Head and Camshafts

1 - CAMSHAFT BEARING CAPS
2 - PLUG
3 - CAMSHAFT
4 - CYLINDER HEAD
5 - CAMSHAFT OIL SEAL

CYLINDER-TO-CYLINDER LEAKAGE TEST

To determine if an engine cylinder head gasket is leaking between adjacent cylinders, follow the procedures in Cylinder Compression Pressure Test (Refer to 9 - ENGINE - DIAGNOSIS AND TESTING). An engine cylinder head gasket leaking between adjacent cylinders will result in approximately a 50–70% reduction in compression pressure.

CYLINDER-TO-WATER JACKET LEAKAGE TEST

WARNING: USE EXTREME CAUTION WHEN THE ENGINE IS OPERATING WITH COOLANT PRESSURE CAP REMOVED.

VISUAL TEST METHOD

With the engine cool, remove the coolant pressure cap. Start the engine and allow it to warm up until thermostat opens.

If a large combustion/compression pressure leak exists, bubbles will be visible in the coolant.

COOLING SYSTEM TESTER METHOD

WARNING: WITH COOLING SYSTEM TESTER IN PLACE, PRESSURE WILL BUILD UP FAST. EXCESSIVE PRESSURE BUILT UP, BY CONTINUOUS ENGINE OPERATION, MUST BE RELEASED TO A SAFE PRESSURE POINT. NEVER PERMIT PRESSURE TO EXCEED 138 kPa (20 psi).

Install Cooling System Tester 7700 or equivalent to pressure cap neck. Start the engine and observe the tester's pressure gauge. If gauge pulsates with every power stroke of a cylinder a combustion pressure leak is evident.

CHEMICAL TEST METHOD

Combustion leaks into the cooling system can also be checked by using Bloc-Chek Kit C-3685-A or equivalent. Perform test following the procedures supplied with the tool kit.

REMOVAL

(1) Perform fuel system pressure release procedure **before attempting any repairs (Refer to 14 - FUEL SYSTEM/FUEL DELIVERY - STANDARD PROCEDURE).**

(2) Disconnect inlet air temperature sensor and make-up air hose.

(3) Remove clean air hose and air cleaner housing.

(4) Disconnect negative cable from battery.

(5) Drain cooling system (Refer to 7 - COOLING/ENGINE - STANDARD PROCEDURE).

(6) Remove upper intake manifold (Refer to 9 - ENGINE/MANIFOLDS/INTAKE MANIFOLD - REMOVAL).

(7) Remove fastener attaching dipstick tube to lower intake manifold (Fig. 18).

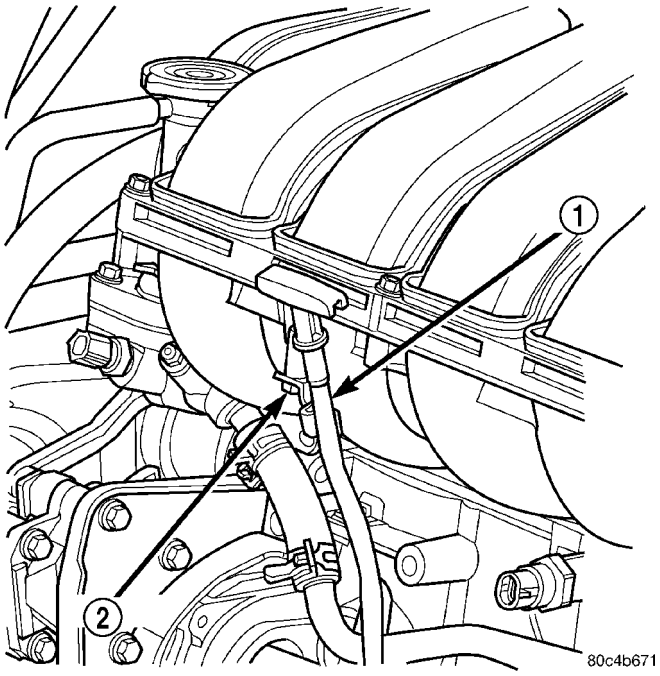

Fig. 18 Dipstick Tube

1 - DIPSTICK TUBE
2 - SCREW

CYLINDER HEAD (Continued)

(8) Disconnect the fuel supply line quick-connect at the fuel rail assembly (Refer to 14 - FUEL SYSTEM/ FUEL DELIVERY/QUICK CONNECT FITTING - STANDARD PROCEDURE).

(9) Remove heater tube support bracket from cylinder head.

(10) Disconnect upper radiator and heater supply hoses from coolant outlet connections.

(11) Disconnect engine coolant temperature sensor connector.

(12) Remove accessory drive belts (Refer to 7 - COOLING/ACCESSORY DRIVE/DRIVE BELTS - REMOVAL).

(13) Disconnect exhaust pipe from manifold.

(14) Disconnect ignition coil wiring connector. Remove ignition coil and plug wires from engine.

(15) Disconnect cam sensor wiring connector (Fig. 19).

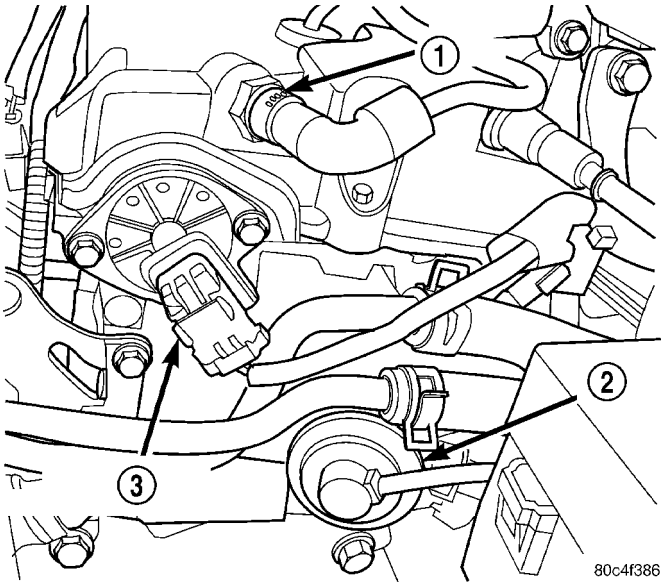

Fig. 19 Camshaft Position Sensor

1 - PCV VALVE
2 - EGR VALVE
3 - CAMSHAFT POSITION SENSOR

(16) Remove timing belt and camshaft sprockets (Refer to 9 - ENGINE/VALVE TIMING/TIMING BELT AND SPROCKETS - REMOVAL).

(17) Remove timing belt idler pulley and rear timing belt cover (Refer to 9 - ENGINE/VALVE TIMING/ TIMING BELT TENSIONER & PULLEY - REMOVAL).

(18) Remove fasteners securing power steering pump fluid reservoir/bracket to cylinder head.

(19) Remove cylinder head cover (Refer to 9 - ENGINE/CYLINDER HEAD/CYLINDER HEAD COVER - REMOVAL).

(20) Remove camshafts (Refer to 9 - ENGINE/ CYLINDER HEAD/CAMSHAFT(S) - REMOVAL).

(21) Remove rocker arms.

(22) Remove cylinder head bolts in the reverse sequence of tightening (Fig. 25).

(23) Remove cylinder head from engine block.

(24) Inspect and clean cylinder head and block sealing surfaces. Refer to Cleaning and Inspection in this section for procedures.

NOTE: Ensure cylinder head bolt holes in the block are clean, dry (free of residual oil or coolant), and threads are not damaged.

CLEANING

To ensure engine gasket sealing, proper surface preparation must be performed, especially with the use of aluminum engine components and multi-layer steel cylinder head gaskets.

NOTE: Multi-Layer Steel (MLS) head gaskets require a scratch free sealing surface.

Remove all gasket material from cylinder head and block (Refer to 9 - ENGINE - STANDARD PROCEDURE). Be careful not to gouge or scratch the aluminum head sealing surface.

Clean all engine oil passages.

INSPECTION

(1) Cylinder head must be flat within 0.1 mm (0.004 in.) (Fig. 20).

(2) Inspect camshaft bearing journals for scoring.

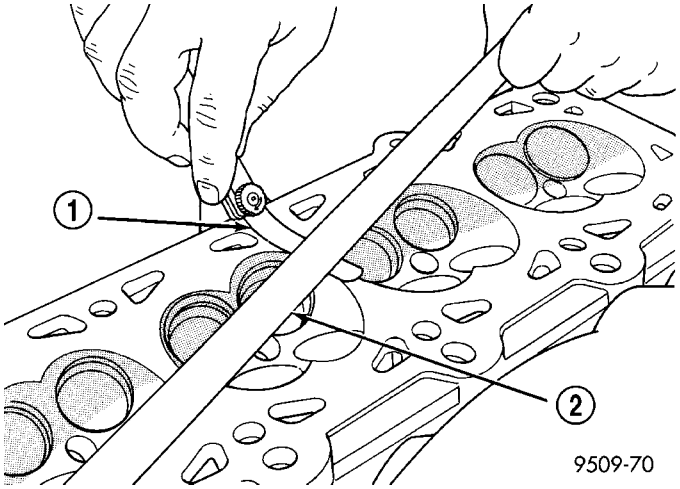

Fig. 20 Checking Cylinder Head Flatness

1 - FEELER GAUGE
2 - STRAIGHT EDGE

(3) Remove carbon and varnish deposits from inside of valve guides with a reliable guide cleaner.

(4) Using a small hole gauge and a micrometer, measure valve guides in 3 places top, middle and bottom (Fig. 21). (Refer to 9 - ENGINE - SPECIFICA-

CYLINDER HEAD (Continued)

TIONS) Replace guides if they are not within specification.

(5) Check valve guide height (Fig. 22).

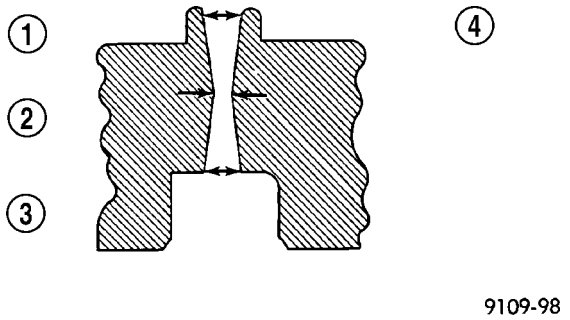

Fig. 21 Checking Wear on Valve Guide—Typical

1 - TOP
2 - MIDDLE
3 - BOTTOM
4 - CUT AWAY VIEW OF VALVE GUIDE MEASUREMENT LOCATIONS

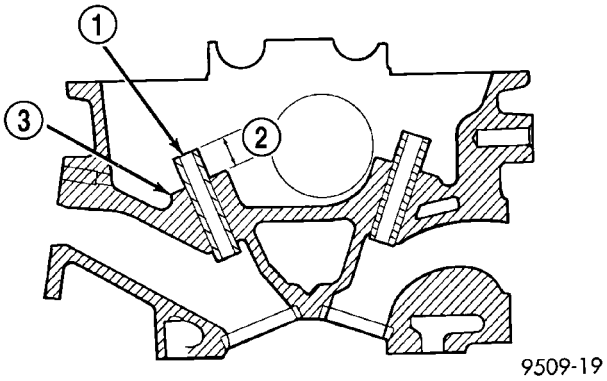

Fig. 22 Valve Guide Height

1 - VALVE GUIDE
2 - 13.25 - 13.75 MM (0.521 - 0.541 IN.)
3 - SPRING SEAT

INSTALLATION

NOTE: The Cylinder head bolts should be examined BEFORE reuse. If the threads are necked down, the bolts should be replaced (Fig. 23).

Necking can be checked by holding a scale or straight edge against the threads. If all the threads do not contact the scale, the bolt should be replaced.

(1) Position the new cylinder head gasket on cylinder block with the part number facing up (Fig. 24). Ensure gasket is seated over the locating dowels in block.

(2) Install cylinder head on block.

(3) Before installing the bolts, the threads should be lightly coated with engine oil.

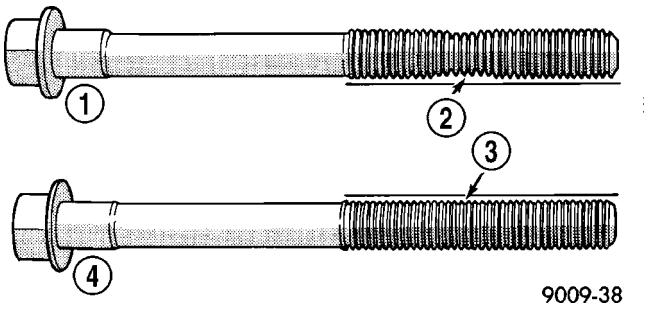

Fig. 23 Checking Bolts for Stretching (Necking)

1 - STRETCHED BOLT
2 - THREADS ARE NOT STRAIGHT ON LINE
3 - THREADS ARE STRAIGHT ON LINE
4 - UNSTRETCHED BOLT

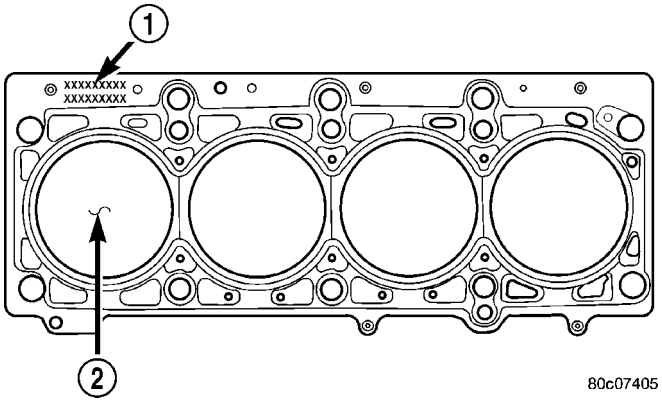

Fig. 24 Cylinder Head Gasket Positioning

1 - PART NUMBER FACES UP
2 - NO. 1 CYLINDER

(4) Tighten the cylinder head bolts in the sequence shown in (Fig. 25). Using the 4 step torque-turn method, tighten according to the following values:

First:
- All bolts to 34 N·m (25 ft. lbs.)

Second:
- Bolts 1–6 to 68 N·m (50 ft. lbs.)
- Bolts 7–10 to 49 N·m (35 ft. lbs.)

Third:
- Bolts 1–6 to 68 N·m (50 ft. lbs.)
- Bolts 7–10 to 49 N·m (35 ft. lbs.)

CAUTION: Do not use a torque wrench for the Fourth step.

Fourth:
- **Tighten all bolts in the specified sequence an additional 90° (1/4 Turn)**

(5) Install rocker arms and camshafts (Refer to 9 - ENGINE/CYLINDER HEAD/CAMSHAFT(S) - INSTALLATION).

(6) Install cylinder head cover (Refer to 9 - ENGINE/CYLINDER HEAD/CYLINDER HEAD COVER - INSTALLATION).

CYLINDER HEAD (Continued)

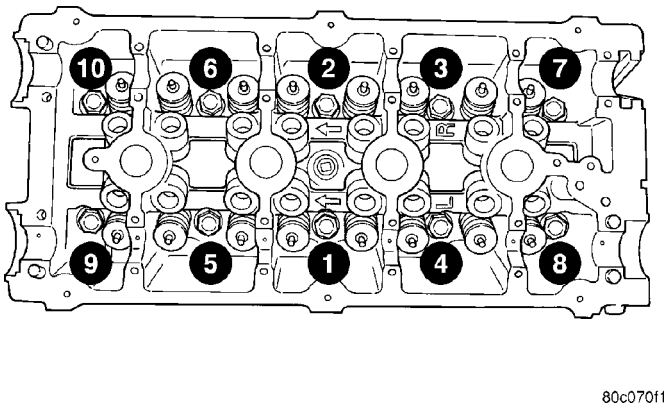

Fig. 25 Cylinder Head Tightening Sequence

(7) Install rear timing belt cover and timing belt idler pulley (Refer to 9 - ENGINE/VALVE TIMING/TIMING BELT TENSIONER & PULLEY - INSTALLATION).

(8) Install camshaft sprockets and timing belt (Refer to 9 - ENGINE/VALVE TIMING/TIMING BELT/CHAIN AND SPROCKETS - INSTALLATION).

(9) Connect cam sensor wiring connector (Fig. 19).

(10) Install ignition coil and plug wires. Connect ignition coil wiring connector.

(11) Install power steering pump reservoir/bracket to cylinder head.

(12) Install exhaust pipe to manifold. Tighten fasteners to 28 N·m (20 ft. lbs.).

(13) Install accessory drive belts (Refer to 7 - COOLING/ACCESSORY DRIVE/DRIVE BELTS - INSTALLATION).

(14) Connect engine coolant temperature sensor connector.

(15) Connect upper radiator and heater supply hoses to coolant outlet connections.

(16) Install heater tube support bracket to cylinder head.

(17) Install fastener attaching dipstick tube to lower intake manifold (Fig. 18).

(18) Connect fuel supply line quick-connect at the fuel rail assembly (Refer to 14 - FUEL SYSTEM/FUEL DELIVERY/QUICK CONNECT FITTING - STANDARD PROCEDURE).

(19) Install upper intake manifold (Refer to 9 - ENGINE/MANIFOLDS/INTAKE MANIFOLD - INSTALLATION).

(20) Fill cooling system (Refer to 7 - COOLING/ENGINE - STANDARD PROCEDURE).

(21) Connect negative cable to battery.

(22) Install clean air hose and air cleaner housing.

(23) Connect inlet air temperature sensor and make-up air hose.

CAMSHAFT OIL SEAL(S)

REMOVAL

(1) Remove timing belt (Refer to 9 - ENGINE/VALVE TIMING/TIMING BELT AND SPROCKETS - REMOVAL).

(2) Hold each camshaft sprocket with Special Tool 6847 while removing center bolt (Fig. 26).

(3) Remove camshaft sprockets.

(4) Remove rear timing belt cover (Refer to 9 - ENGINE/VALVE TIMING/TIMING BELT COVER(S) - REMOVAL).

(5) Remove camshaft seal using Special Tool C-4679A (Fig. 27).

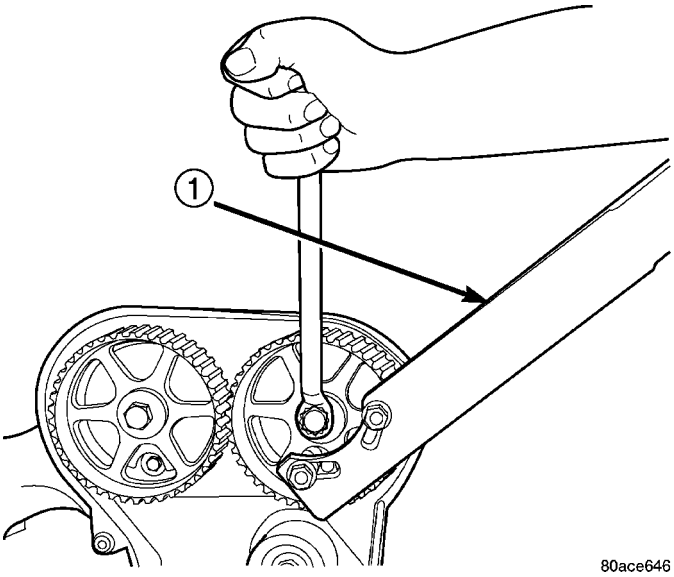

Fig. 26 Camshaft Sprocket - Removal/Installation

1 - SPECIAL TOOL 6847

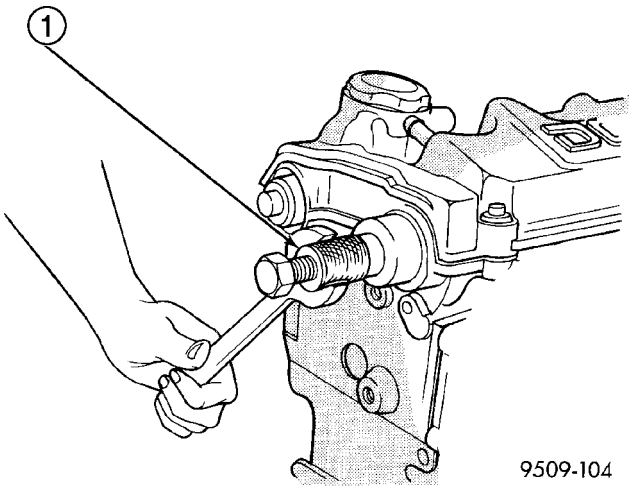

Fig. 27 Camshaft Oil Seal - Removal With C-4679A

1 - SPECIAL TOOL C-4679

CAMSHAFT OIL SEAL(S) (Continued)

CAUTION: Do not nick shaft seal surface or seal bore.

INSTALLATION

(1) Shaft seal surface must be free of varnish, dirt or nicks. Polish with 400 grit paper if necessary.

(2) Install camshaft seals into cylinder head using Special Tool MD-998306 until flush with head (Fig. 28).

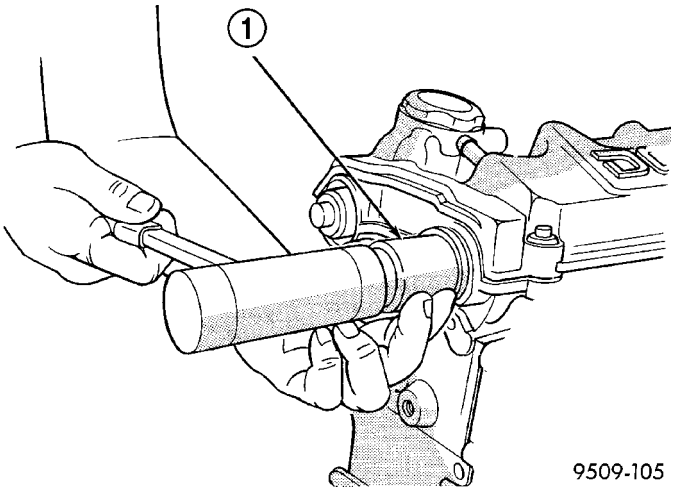

Fig. 28 Camshaft Seal - Installation

1 - SPECIAL TOOL MD-998306

(3) Install timing belt rear cover (Refer to 9 - ENGINE/VALVE TIMING/TIMING BELT COVER(S) - INSTALLATION).

(4) Install camshaft sprockets. Hold each sprocket with Special Tool 6847 and tighten center bolt to 115 N·m (85 ft. lbs.) (Fig. 26).

(5) Install timing belt and front covers (Refer to 9 - ENGINE/VALVE TIMING/TIMING BELT AND SPROCKETS - INSTALLATION) (Refer to 9 - ENGINE/VALVE TIMING/TIMING BELT COVER(S) - INSTALLATION).

CAMSHAFT(S)

DESCRIPTION

Both nodular iron camshafts have six bearing journal surfaces and two cam lobes per cylinder (Fig. 29). Flanges at the rear journals control camshaft end play. Provision for a cam position sensor is located on the intake camshaft on the rear of the cylinder head. A hydrodynamic oil seal is used for oil control at the front of the camshaft.

OPERATION

The camshaft is driven by the crankshaft via drive sprockets and belt. The camshaft has precisely machined lobes to provide accurate valve timing and duration.

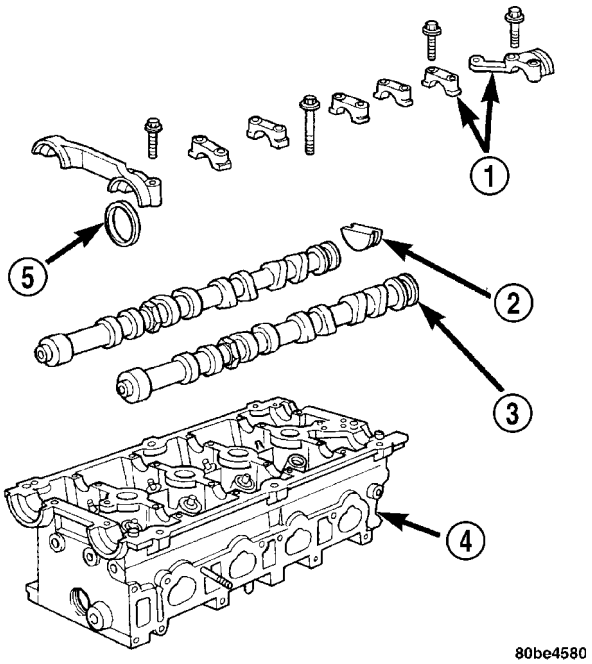

Fig. 29 Cylinder Head and Camshafts

1 - CAMSHAFT BEARING CAPS
2 - PLUG
3 - CAMSHAFT
4 - CYLINDER HEAD
5 - CAMSHAFT OIL SEAL

STANDARD PROCEDURE - MEASURING CAMSHAFT END PLAY

(1) Oil camshaft journals and install camshaft **WITHOUT** rocker arms. Install rear cam caps and tighten screws to specified torque.

(2) Using a suitable tool, move camshaft as far rearward as it will go.

(3) Zero dial indicator (Fig. 30).

(4) Move camshaft as far forward as it will go.

(5) Record reading on dial indicator. For end play specification, (Refer to 9 - ENGINE - SPECIFICATIONS).

(6) If end play is excessive, check cylinder head and camshaft for wear; replace as necessary.

REMOVAL

(1) Remove cylinder head cover (Refer to 9 - ENGINE/CYLINDER HEAD/CYLINDER HEAD COVER - REMOVAL).

(2) Remove camshaft position sensor and camshaft target magnet (Refer to 8 - ELECTRICAL/IGNITION CONTROL/CAMSHAFT POSITION SENSOR - REMOVAL).

(3) Remove timing belt (Refer to 9 - ENGINE/VALVE TIMING/TIMING BELT AND SPROCKETS - REMOVAL).

CAMSHAFT(S) (Continued)

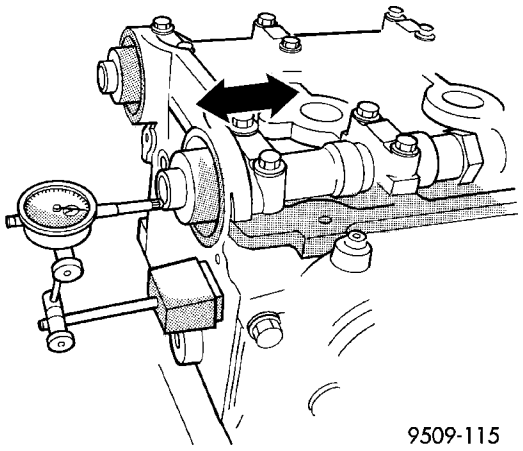

Fig. 30 Camshaft End Play - Typical

(4) Remove camshaft sprockets and timing belt rear cover (Refer to 9 - ENGINE/VALVE TIMING/ TIMING BELT COVER(S) - REMOVAL).

(5) Bearing caps are identified for location. Remove the outside bearing caps first (Fig. 31).

(6) Loosen the camshaft bearing cap attaching fasteners in sequence shown (Fig. 32) one camshaft at a time.

CAUTION: Camshafts are not interchangeable. The intake cam number 6 thrust bearing face spacing is wider.

(7) Identify the camshafts before removing from the head. The camshafts are not interchangeable.

(8) Remove camshafts from cylinder head.

NOTE: If removing rocker arms, identify for reinstallation in the original position.

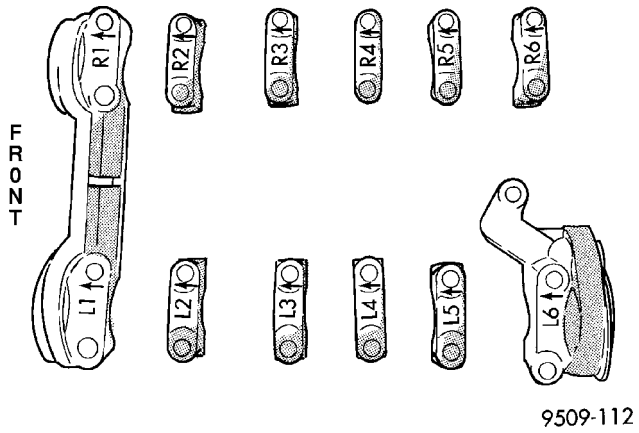

Fig. 31 Camshaft Bearing Cap Identification

CLEANING

Clean camshaft with a suitable solvent.

INSPECTION

(1) Inspect camshaft bearing journals for damage and binding (Fig. 33). If journals are binding, check the cylinder head for damage. Also check cylinder head oil holes for clogging.

(2) Check the cam lobe and bearing surfaces for abnormal wear and damage. Replace camshaft if defective.

NOTE: If camshaft is replaced due to lobe wear or damage, always replace the rocker arms.

(3) Measure the lobe actual wear (unworn area - wear zone = actual wear) (Fig. 33) and replace camshaft if out of limit. Standard value is 0.0254 mm (0.001 in.), wear **limit** is 0.254 mm (0.010 in.).

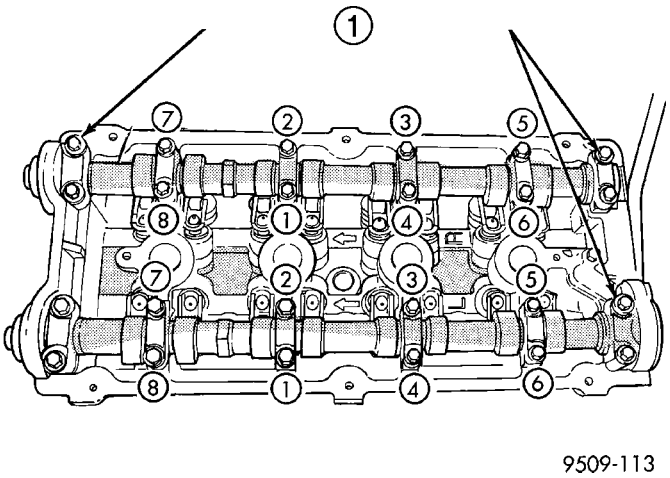

Fig. 32 Camshaft Bearing Cap - Removal

1 - REMOVE OUTSIDE BEARING CAPS FIRST

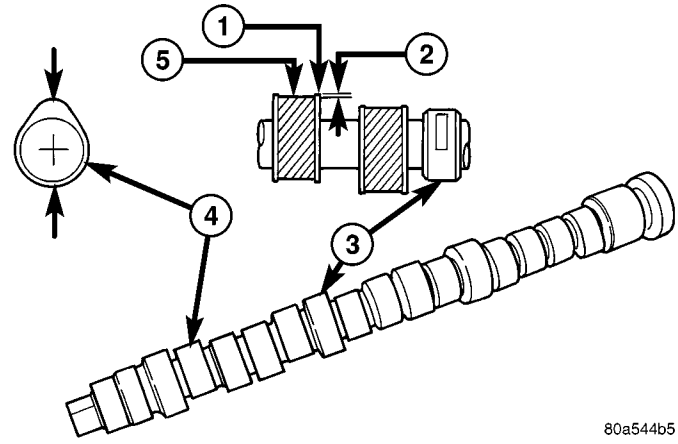

Fig. 33 Checking Camshaft(s) for Wear

1 - UNWORN AREA
2 - ACTUAL WEAR
3 - BEARING JOURNAL
4 - LOBE
5 - WEAR ZONE

INSTALLATION

CAUTION: Ensure that NONE of the pistons are at top dead center when installing the camshafts.

CAMSHAFT(S) (Continued)

(1) Lubricate all camshaft bearing journals, rocker arms and camshaft lobes.

(2) Install all rocker arms in original positions, if reused.

(3) Position camshafts on cylinder head bearing journals. Install right and left camshaft bearing caps No. 2 – 5 and right No. 6. Tighten M6 fasteners to 12 N·m (105 in. lbs.) in sequence shown in (Fig. 34).

(4) Apply Mopar® Gasket Maker to No. 1 and No. 6 bearing caps (Fig. 35). Install bearing caps and tighten M8 fasteners to 28 N·m (250 in. lbs.).

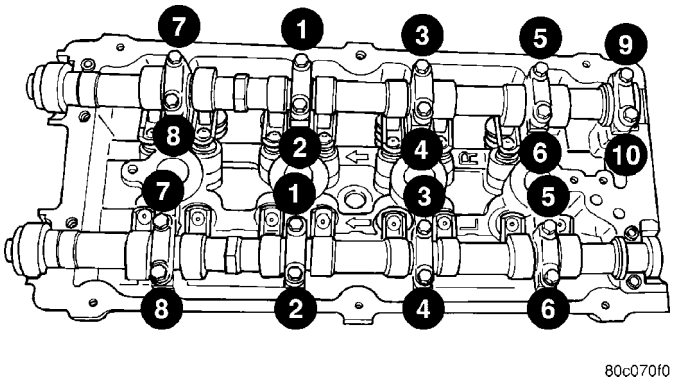

Fig. 34 Camshaft Bearing Cap Tightening Sequence

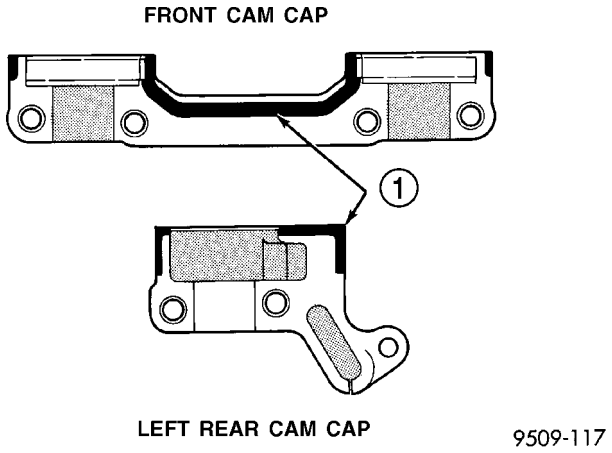

Fig. 35 Camshaft Bearing Cap Sealing

1 - 1.5 mm (.060 in.) DIAMETER BEAD OF MOPAR GASKET MAKER

NOTE: Bearing end caps must be installed before seals can be installed.

(5) Install camshaft oil seals (Refer to 9 - ENGINE/CYLINDER HEAD/CAMSHAFT OIL SEAL(S) - INSTALLATION).

(6) Install camshaft target magnet and camshaft position sensor.

(7) Install cylinder head cover (Refer to 9 - ENGINE/CYLINDER HEAD/CYLINDER HEAD COVER - INSTALLATION).

(8) Install timing belt rear cover and camshaft sprockets (Refer to 9 - ENGINE/VALVE TIMING/ TIMING BELT COVER(S) - INSTALLATION).

(9) Install timing belt (Refer to 9 - ENGINE/ VALVE TIMING/TIMING BELT AND SPROCKETS - INSTALLATION).

CYLINDER HEAD COVER

REMOVAL

(1) Remove upper intake manifold (Refer to 9 - ENGINE/MANIFOLDS/INTAKE MANIFOLD - REMOVAL).

(2) Remove ignition coil and spark plug wires.

(3) Disconnect PCV and make-up air hoses from cylinder head cover (Fig. 36).

(4) Remove cylinder head cover bolts.

CAUTION: When removing cylinder head cover bolts, be careful not to interchange the two (2) center bolts with the seven (7) perimeter bolts. The two (2) center bolts contain an aluminum washer between the bolt head and torque limiter for sealing purposes.

(5) Remove cylinder head cover from cylinder head.

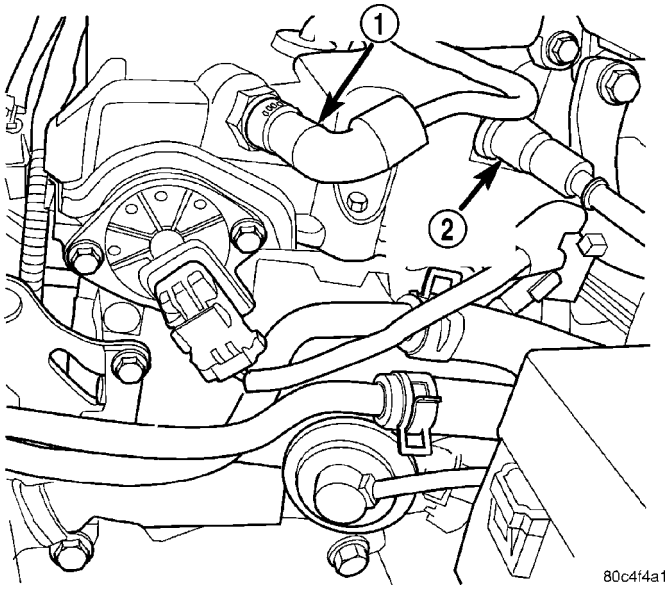

Fig. 36 PCV and Make-up

1 - PCV HOSE
2 - MAKE-UP AIR HOSE

INSTALLATION

NOTE: Replace spark plug well seals and bolt seals when installing a new cylinder head cover gasket.

CYLINDER HEAD COVER (Continued)

(1) Install new cylinder head cover gaskets (Fig. 37) and spark plug well seals (Fig. 38).

(2) Replace cylinder head cover bolt seals (Fig. 39).

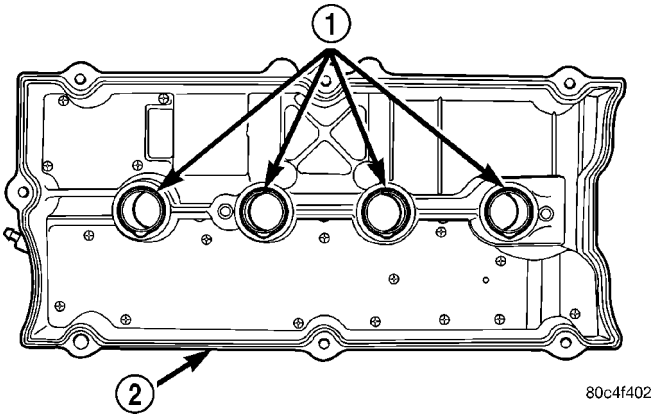

Fig. 37 Cylinder Head Cover Gasket and Spark Plug Well Seals

1 - SPARK PLUG WELL SEALS
2 - GASKET

CAUTION: Do not allow oil or solvents to contact

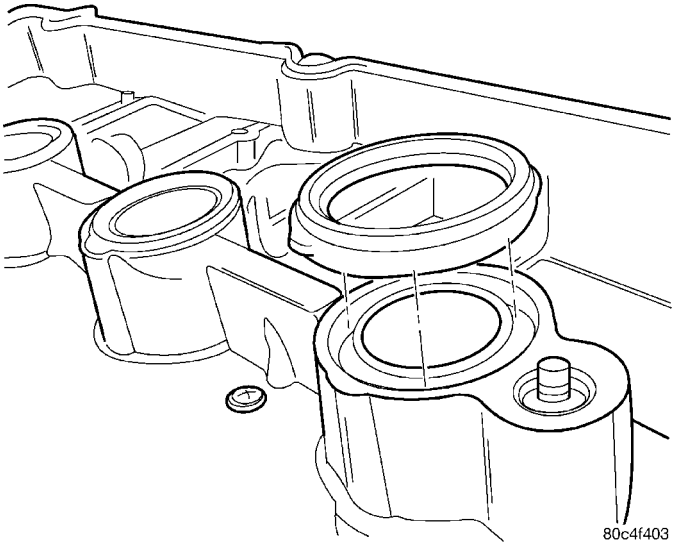

Fig. 38 Spark Plug Well Seals

the timing belt as they can deteriorate the rubber and cause tooth skipping.

(3) Apply Mopar® Engine RTV GEN II at the camshaft cap corners and at the top edges of the 1/2 round seal (Fig. 40).

CAUTION: When installing cylinder head cover bolts, be careful not to interchange the two (2) center bolts with the seven (7) perimeter bolts. The two (2) center bolts contain an aluminum washer between the bolt head and torque limiter for sealing purposes.

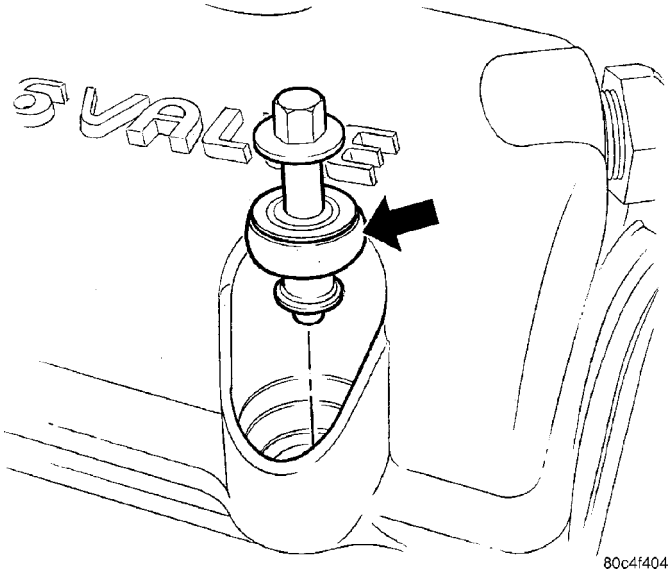

Fig. 39 Cylinder Head Cover Bolt Assembly

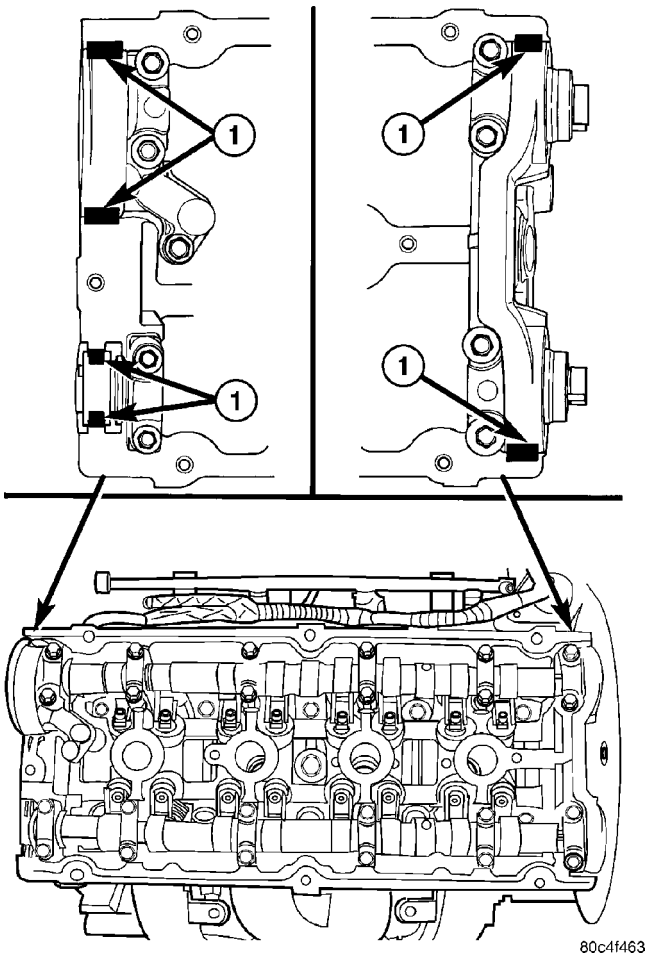

Fig. 40 Sealer Locations

1 – SEALER LOCATION

(4) Install cylinder head cover assembly to cylinder head. Install all bolts, ensuring the two (2) bolts containing the sealing washer are located in the cen-

CYLINDER HEAD COVER (Continued)

ter locations of cover. Tighten bolts in sequence shown in (Fig. 41). Using a 3 step torque method as follows:

(a) Tighten all bolts to 4.5 N·m (40 in. lbs.).
(b) Tighten all bolts to 9.0 N·m (80 in. lbs.).
(c) Tighten all bolts to 12 N·m (105 in. lbs.).

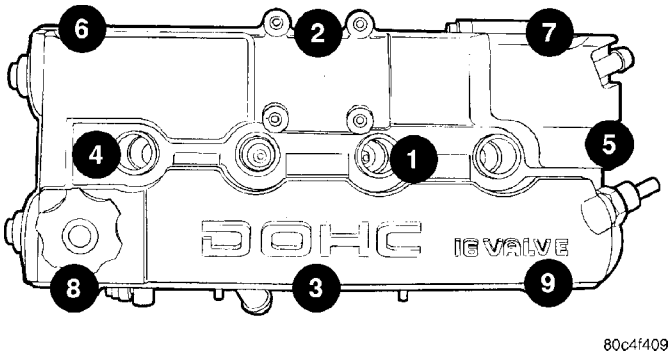

Fig. 41 Cylinder Head Cover Tightening Sequence (Typical Cover Shown)

(5) Install ignition coil and spark plug wires. Tighten fasteners to 12 N·m (105 in. lbs.).

(6) If the PCV valve was removed, apply Mopar® Thread Sealant with Teflon to threads and install valve to cylinder head cover. Tighten PCV valve to 8 N·m (70 in. lbs.).

(7) Connect PCV and make-up air hoses to cylinder head cover (Fig. 36).

(8) Install upper intake manifold (Refer to 9 - ENGINE/MANIFOLDS/INTAKE MANIFOLD - INSTALLATION).

HYDRAULIC LASH ADJUSTERS

DIAGNOSIS AND TESTING

HYDRAULIC LASH ADJUSTER NOISE DIAGNOSIS

A tappet-like noise may be produced from several items. Check the following items.

(1) Engine oil level too high or too low. This may cause aerated oil to enter the adjusters and cause them to be spongy.

(2) Insufficient running time after rebuilding cylinder head. Low speed running up to 1 hour may be required.

(3) During this time, turn engine off and let set for a few minutes before restarting. Repeat this several times after engine has reached normal operating temperature.

(4) Low oil pressure.

(5) The oil restrictor (integral to the cylinder head gasket) in the vertical oil passage to the cylinder head is plugged with debris.

(6) Air ingested into oil due to broken or cracked oil pump pick up.

(7) Worn valve guides.

(8) Rocker arm ears contacting valve spring retainer.

(9) Rocker arm loose, adjuster stuck or at maximum extension and still leaves lash in the system.

(10) Faulty lash adjuster.

- Check lash adjusters for sponginess while installed in cylinder head. Depress part of rocker arm over adjuster. Normal adjusters should feel very firm. Spongy adjusters can be bottomed out easily.
- Remove suspected lash adjusters, and replace as necessary.

REMOVAL

NOTE: This procedure is for in-vehicle service with camshafts installed.

(1) Remove cylinder head cover (Refer to 9 - ENGINE/CYLINDER HEAD/CYLINDER HEAD COVER(S) - REMOVAL).

(2) Remove rocker arm (Refer to 9 - ENGINE/CYLINDER HEAD/ROCKER ARMS - REMOVAL).

(3) Remove hydraulic lifter (Fig. 42).

(4) Repeat removal procedure for each hydraulic lifter.

(5) If reusing, mark each hydraulic lifter for reassembly in original position. Lifters are serviced as an assembly.

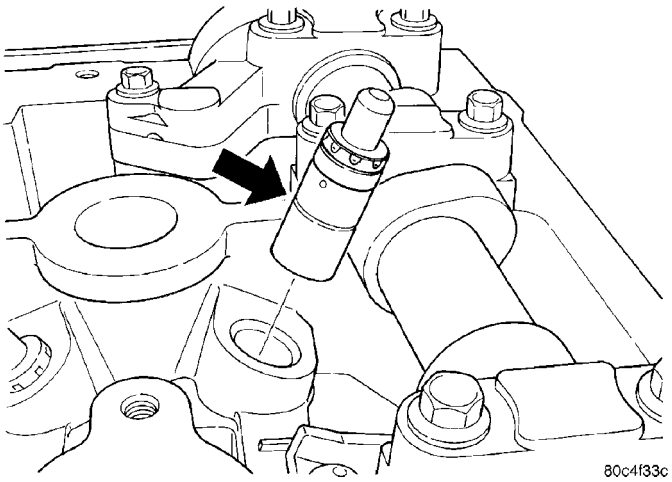

Fig. 42 Hydraulic Lifter

INSTALLATION

(1) Install hydraulic lifter (Fig. 42). Ensure the lifters are at least partially full of engine oil. This is indicated by little or no plunger travel when the lifter is depressed.

HYDRAULIC LASH ADJUSTERS (Continued)

(2) Install rocker arm (Refer to 9 - ENGINE/CYLINDER HEAD/ROCKER ARMS - INSTALLATION).

(3) Repeat installation procedure for each hydraulic lifter.

(4) Install cylinder head cover (Refer to 9 - ENGINE/CYLINDER HEAD/CYLINDER HEAD COVER(S) - INSTALLATION).

INTAKE/EXHAUST VALVES & SEATS

DESCRIPTION

The valves are made of heat resistant steel. They have chrome plated stems to prevent scuffing. Viton rubber valve stem seals are integral with the spring seats. The valves have three-bead lock keepers to retain springs and to promote valve rotation.

OPERATION

The four valves per cylinder (two intake and two exhaust) are opened by using roller camshaft followers which pivot on hydraulic lash adjusters.

CLEANING

(1) Clean all valves thoroughly and discard burned, warped and cracked valves.

ROCKER ARMS

REMOVAL

NOTE: This procedure is for in-vehicle service with camshafts installed.

(1) Disconnect negative battery cable.

(2) Remove cylinder head cover (Refer to 9 - ENGINE/CYLINDER HEAD/CYLINDER HEAD COVER(S) - REMOVAL).

(3) Remove spark plugs.

(4) Rotate engine until the camshaft lobe, on the rocker arm being removed, is positioned on its base circle (heel). Also, the piston should be a minimum of 6.3 mm (0.25 in) below TDC position.

CAUTION: If cam follower assemblies are to be reused, always mark position for reassembly in their original positions.

(5) Using Special Tools 8215-A and 8436 slowly depress valve assembly until rocker arm can be removed (Fig. 43).

(6) Repeat removal procedure for each rocker arm.

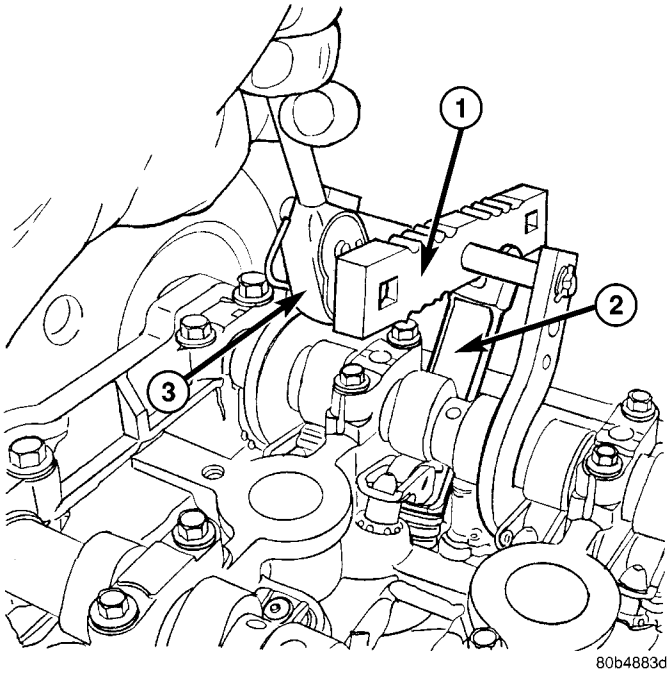

Fig. 43 Rocker Arm - Removal/Installation

1 - SPECIAL TOOL 8215-A
2 - SPECIAL TOOL 8436
3 - 3/8″ DRIVE RACHET

INSPECTION

Inspect the rocker arm for wear or damage (Fig. 44). Replace as necessary.

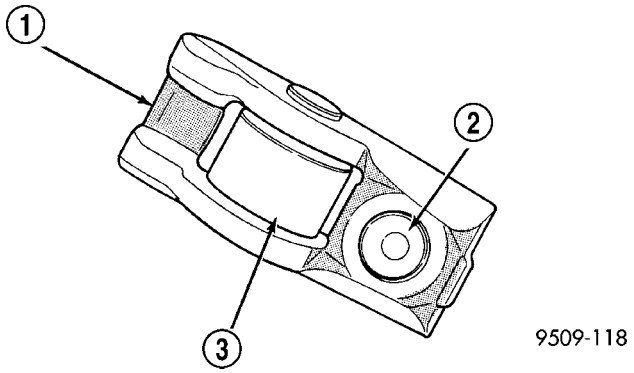

Fig. 44 Rocker Arm

1 - TIP
2 - LASH ADJUSTER POCKET
3 - ROLLER

INSTALLATION

(1) Lubricate rocker arm with clean engine oil.

(2) Using Special Tools 8215-A and 8436 slowly depress valve assembly until rocker arm can be installed on the hydraulic lifter and valve stem (Fig. 43).

(3) Repeat installation procedure for each rocker arm.

(4) Install spark plugs.

ROCKER ARMS (Continued)

(5) Install cylinder head cover (Refer to 9 - ENGINE/CYLINDER HEAD/CYLINDER HEAD COVER(S) - INSTALLATION).

(6) Connect negative battery cable.

VALVE SPRINGS AND SEALS

REMOVAL

REMOVAL - CYLINDER HEAD ON

(1) Disconnect negative battery cable.

(2) Remove timing belt (Refer to 9 - ENGINE/VALVE TIMING/TIMING BELT/CHAIN AND SPROCKETS - REMOVAL).

(3) Remove cylinder head cover (Refer to 9 - ENGINE/CYLINDER HEAD/CYLINDER HEAD COVER(S) - REMOVAL).

(4) Remove camshafts (Refer to 9 - ENGINE/CYLINDER HEAD/CAMSHAFT(S) - REMOVAL).

(5) Rotate crankshaft until piston is at TDC.

(6) With air hose attached to adapter tool installed in spark plug hole, apply 90-120 psi air pressure.

(7) Using Special Tool MD-998772-A with adapter 6779 (Fig. 45), compress valve springs and remove valve locks.

(8) Remove valve spring(s).

(9) Remove valve stem seal(s) by a using valve stem seal tool (Fig. 47).

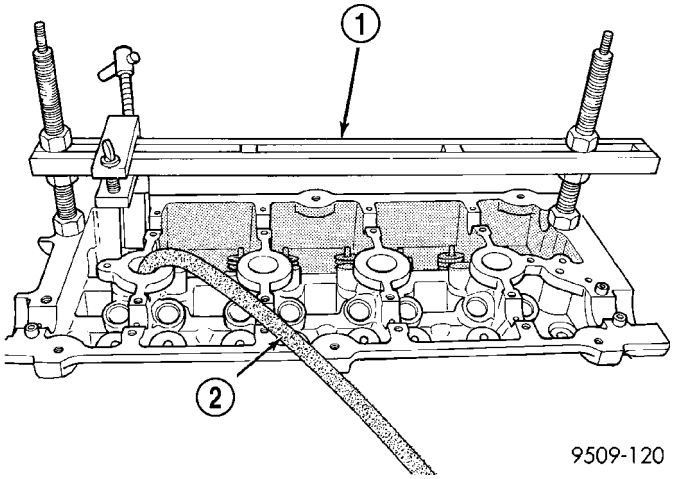

Fig. 45 Valve Spring - Removal/Installation

1 - VALVE SPRING COMPRESSOR MD 998772A
2 - AIR HOSE

REMOVAL - CYLINDER HEAD OFF

(1) With cylinder head removed from cylinder block, compress valve springs using a universal valve spring compressor.

(2) Remove valve retaining locks, valve spring retainers, valve stem seals and valve springs.

(3) Before removing valves, **remove any burrs from valve stem lock grooves to prevent damage to the valve guides.** Identify valves, locks and retainers to insure installation in original location.

(4) Inspect the valves. (Refer to 9 - ENGINE/CYLINDER HEAD/VALVE SPRINGS - INSPECTION)

INSPECTION

(1) Whenever valves have been removed for inspection, reconditioning or replacement, valve springs should be tested for correct tension. Discard the springs that do not meet specifications. The following specifications apply to both intake and exhaust valves springs:

- Valve Closed Nominal Tension—76 lbs. @ 38.0 mm (1.50 in.)
- Valve Open Nominal Tension—136 lbs. @ 29.75 mm (1.17 in.)

(2) Inspect each valve spring for squareness with a steel square and surface plate, test springs from both ends. If the spring is more than 1.5 mm (1/16 inch) out of square, install a new spring.

INSTALLATION

INSTALLATION - CYLINDER HEAD ON

(1) Install valve seal/valve spring seat assembly (Fig. 46). Push the assembly down to seat it onto the valve guide.

(2) Install valve spring and retainer, use Special Tool MD-998772-A with adapter 6779 to compress valve springs only enough to install locks (Fig. 45). Correct alignment of tool is necessary to avoid nicking valve stems.

(3) Remove air hose and install spark plugs.

(4) Install camshafts (Refer to 9 - ENGINE/CYLINDER HEAD/CAMSHAFT(S) - INSTALLATION).

(5) Install cylinder head cover (Refer to 9 - ENGINE/CYLINDER HEAD/CYLINDER HEAD COVER(S) - INSTALLATION).

(6) Install timing belt (Refer to 9 - ENGINE/VALVE TIMING/TIMING BELT/CHAIN AND SPROCKETS - INSTALLATION).

(7) Connect negative battery cable.

INSTALLATION - CYLINDER HEAD OFF

(1) Coat valve stems with clean engine oil and insert in cylinder head.

(2) Install new valve stem seals on all valves using a valve stem seal tool (Fig. 47). The valve stem seals should be pushed firmly and squarely over valve guide.

VALVE SPRINGS AND SEALS (Continued)

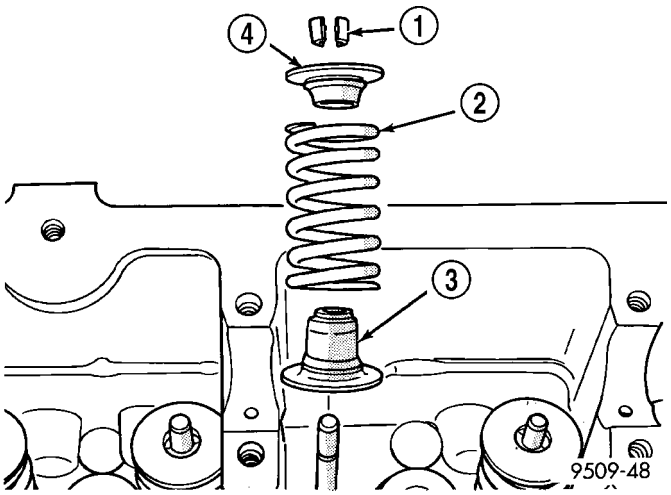

Fig. 46 Valve Stem Seal/Valve Spring Seat

1 - VALVE RETAINING LOCKS
2 - VALVE SPRING
3 - VALVE SEAL AND VALVE SPRING SEAT ASSEMBLY
4 - VALVE SPRING RETAINER

CAUTION: When oversize valves are used, the corresponding oversize valve seal must also be used. Excessive guide wear may result if oversize seals are not used with oversize valves.

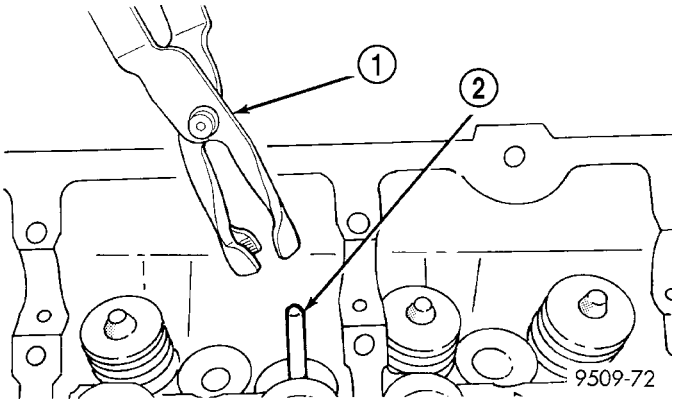

Fig. 47 Valve Stem Oil Seal Tool

1 - VALVE SEAL TOOL
2 - VALVE STEM

(3) Install valve springs and retainers. Compress valve springs only enough to install locks, taking care not to misalign the direction of compression. Nicked valve stems may result from misalignment of the valve spring compressor.

CAUTION: When depressing the valve spring retainers with valve spring compressor the locks can become dislocated. Ensure both locks are in the correct location after removing tool.

(4) Check the valve spring installed height B after refacing the valve and seat (Fig. 48). Make sure measurements are taken from top of spring seat to the bottom surface of spring retainer. If height is greater than 38.75 mm (1.525 in.), install a 0.762 mm (0.030 in.) spacer under the valve spring seat to bring spring height back within specification.

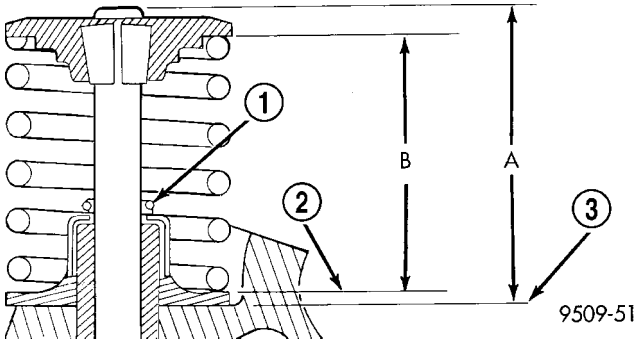

Fig. 48 Checking Spring Installed Height and Valve Tip Height Dimensions

1 - GARTER SPRING
2 - VALVE SPRING SEAT
3 - CYLINDER HEAD SURFACE

ENGINE BLOCK

DESCRIPTION

The cast iron cylinder block is a two-piece assembly, consisting of the cylinder block and bedplate (Fig. 49). The bedplate incorporates the main bearing caps and bolts to the cylinder block. This design offers a much stronger lower end and increased cylinder block rigidity. The rear oil seal retainer is integral with the block. The bedplate and block are serviced as an assembly.

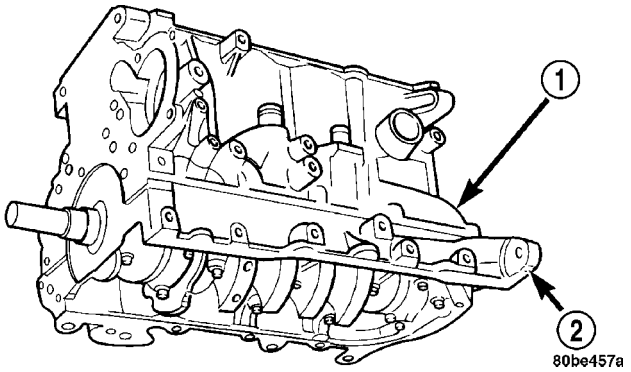

Fig. 49 Cylinder Block and Bedplate

1 - CYLINDER BLOCK
2 - BEDPLATE

STANDARD PROCEDURE - CYLINDER BORE HONING

(1) Used carefully, the cylinder bore resizing hone, recommended tool C-823 or equivalent, equipped with 220 grit stones, is the best tool for this honing procedure. In addition to deglazing, it will reduce taper and out-of-round as well as removing light

ENGINE BLOCK (Continued)

scuffing, scoring or scratches. Usually a few strokes will clean up a bore and maintain the required limits.

(2) Deglazing of the cylinder walls may be done using a cylinder surfacing hone, recommended tool C-3501 or equivalent, equipped with 280 grit stones, if the cylinder bore is straight and round. 20–60 strokes depending on the bore condition, will be sufficient to provide a satisfactory surface. Use a light honing oil. **Do not use engine or transmission oil, mineral spirits or kerosene.** Inspect cylinder walls after each 20 strokes.

(3) Honing should be done by moving the hone up and down fast enough to get a cross-hatch pattern. When hone marks **intersect** at 40-60 degrees, the cross hatch angle is most satisfactory for proper seating of rings (Fig. 50).

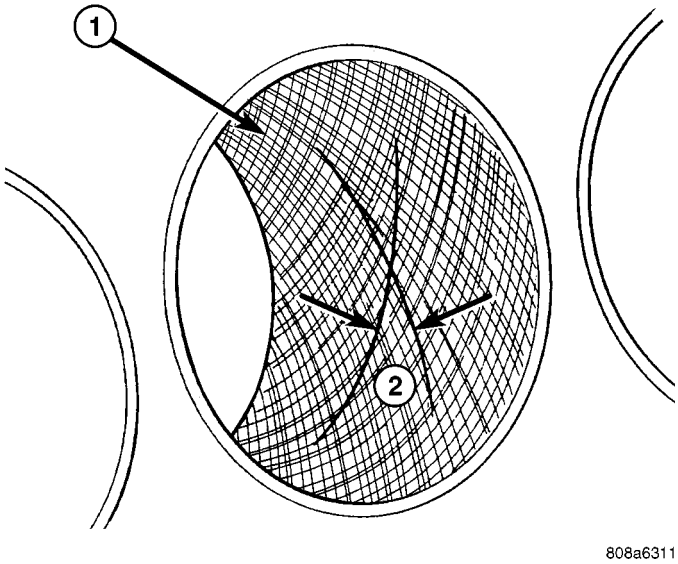

Fig. 50 Cylinder Bore Cross-Hatch Pattern

1 - CROSS-HATCH PATTERN
2 - 40°–60°

(4) A controlled hone motor speed between 200–300 RPM is necessary to obtain the proper cross-hatch angle. The number of up and down strokes per minute can be regulated to get the desired 40–60 degree angle. Faster up and down strokes increase the cross-hatch angle.

(5) After honing, it is necessary that the block be cleaned again to remove all traces of abrasive.

CAUTION: Ensure all abrasives are removed from engine parts after honing. It is recommended that a solution of soap and hot water be used with a brush and the parts then thoroughly dried. The bore can be considered clean when it can be wiped clean with a white cloth and cloth remains clean. Oil the bores after cleaning to prevent rusting.

CLEANING

Clean cylinder block thoroughly using a suitable cleaning solvent.

INSPECTION

ENGINE BLOCK

(1) Clean cylinder block thoroughly and check all core hole plugs for evidence of leaking.

(2) If new core plugs are to be installed, (Refer to 9 - ENGINE - STANDARD PROCEDURE - ENGINE CORE AND OIL GALLERY PLUGS).

(3) Examine block and cylinder bores for cracks or fractures.

(4) Check block deck surfaces for flatness. Deck surface must be within service limit of 0.1 mm (0.004 in.).

CYLINDER BORE

NOTE: The cylinder bores should be measured at normal room temperature, 21°C (70°F).

The cylinder walls should be checked for out-of-round and taper with Tool C119 or equivalent (Fig. 51) (Refer to 9 - ENGINE - SPECIFICATIONS). If the cylinder walls are badly scuffed or scored, the cylinder block should be replaced, and new pistons and rings fitted.

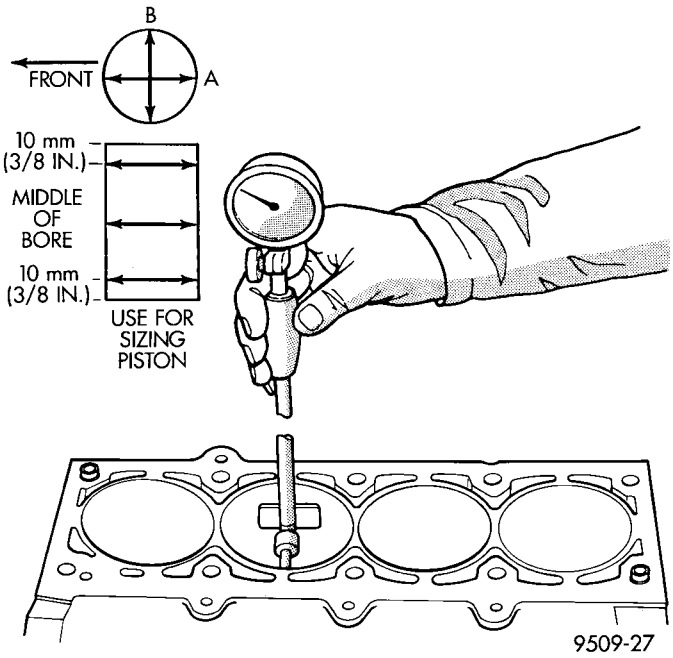

Fig. 51 Checking Cylinder Bore Size

Measure the cylinder bore at three levels in directions A and B (Fig. 51). Top measurement should be 10 mm (3/8 in.) down and bottom measurement

should be 10 mm (3/8 in.) up from bottom of bore. (Refer to 9 - ENGINE - SPECIFICATIONS).

CRANKSHAFT

STANDARD PROCEDURE - CRANKSHAFT END PLAY

(1) Mount a dial indicator to front of engine, locating probe on nose of the crankshaft (Fig. 52).

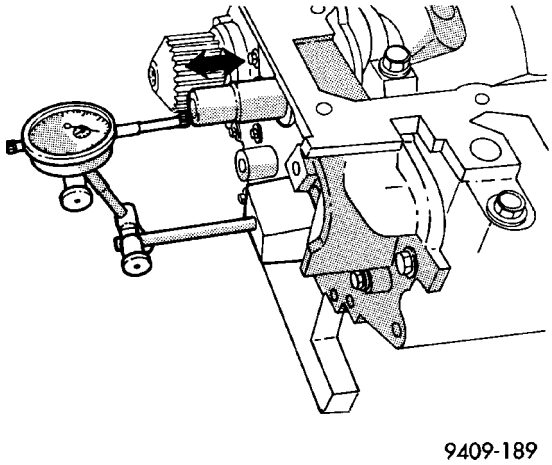

Fig. 52 Checking Crankshaft End Play

(2) Move crankshaft all the way to the rear of its travel.

(3) Zero the dial indicator.

(4) Move crankshaft all the way to the front of its travel and read the dial indicator. For crankshaft specifications (Refer to 9 - ENGINE - SPECIFICATIONS)

REMOVAL - CRANKSHAFT

(1) Remove engine assembly from vehicle (Refer to 9 - ENGINE - REMOVAL).

(2) Separate transaxle from engine.

(3) Remove drive plate/flexplate.

(4) Remove crankshaft rear oil seal (Refer to 9 - ENGINE/ENGINE BLOCK/CRANKSHAFT OIL SEAL - REAR - REMOVAL).

(5) Mount engine on a suitable repair stand.

(6) Drain engine oil.

(7) Remove crankshaft vibration damper (Refer to 9 - ENGINE/ENGINE BLOCK/VIBRATION DAMPER - REMOVAL).

(8) Remove front timing belt cover, front engine mount bracket, and timing belt (Refer to 9 - ENGINE/VALVE TIMING/TIMING BELT AND SPROCKETS - REMOVAL).

(9) Remove the timing belt tensioner and pulley bracket (Refer to 9 - ENGINE/VALVE TIMING/TIMING BELT TENSIONER & PULLEY - REMOVAL).

(10) Remove camshaft sprockets and rear timing belt cover (Refer to 9 - ENGINE/VALVE TIMING/TIMING BELT COVER(S) - REMOVAL).

(11) Remove crankshaft sprocket (Refer to 9 - ENGINE/ENGINE BLOCK/CRANKSHAFT OIL SEAL - FRONT - REMOVAL).

(12) Remove oil filter and adapter (Fig. 53).

(13) Remove oil pan (Refer to 9 - ENGINE/LUBRICATION/OIL PAN - REMOVAL).

(14) Remove oil pump pick-up tube.

(15) Remove oil pump (Refer to 9 - ENGINE/LUBRICATION/OIL PUMP - REMOVAL).

(16) Remove crankshaft position sensor (Fig. 53).

(17) Using a permanent ink or paint marker, identify cylinder number on each connecting rod cap (Fig. 54).

CAUTION: DO NOT use a number stamp or a punch to mark connecting rods. Damage to connecting rod could occur.

(18) Remove all connecting rod bolts and caps. Care should be taken not to damage the fracture rod and cap surfaces.

NOTE: Do not reuse connecting rod bolts.

(19) Remove all bedplate bolts from the engine block (Fig. 55).

(20) Using a mallet tap the bedplate loose from the engine block dowel pins.

CAUTION: Do not pry up on one side of the bedplate. Damage may occur to cylinder block to bedplate alignment and thrust bearing.

(21) Bedplate should be removed evenly from the cylinder block dowel pins to prevent damage to the dowel pins and thrust bearing.

CAUTION: Use extreme care when handling crankshaft. Tone wheel damage can occur if crankshaft is mis-handled.

(22) Lift out crankshaft from cylinder block. Do not damage the main bearings or journals when removing the crankshaft.

CRANKSHAFT (Continued)

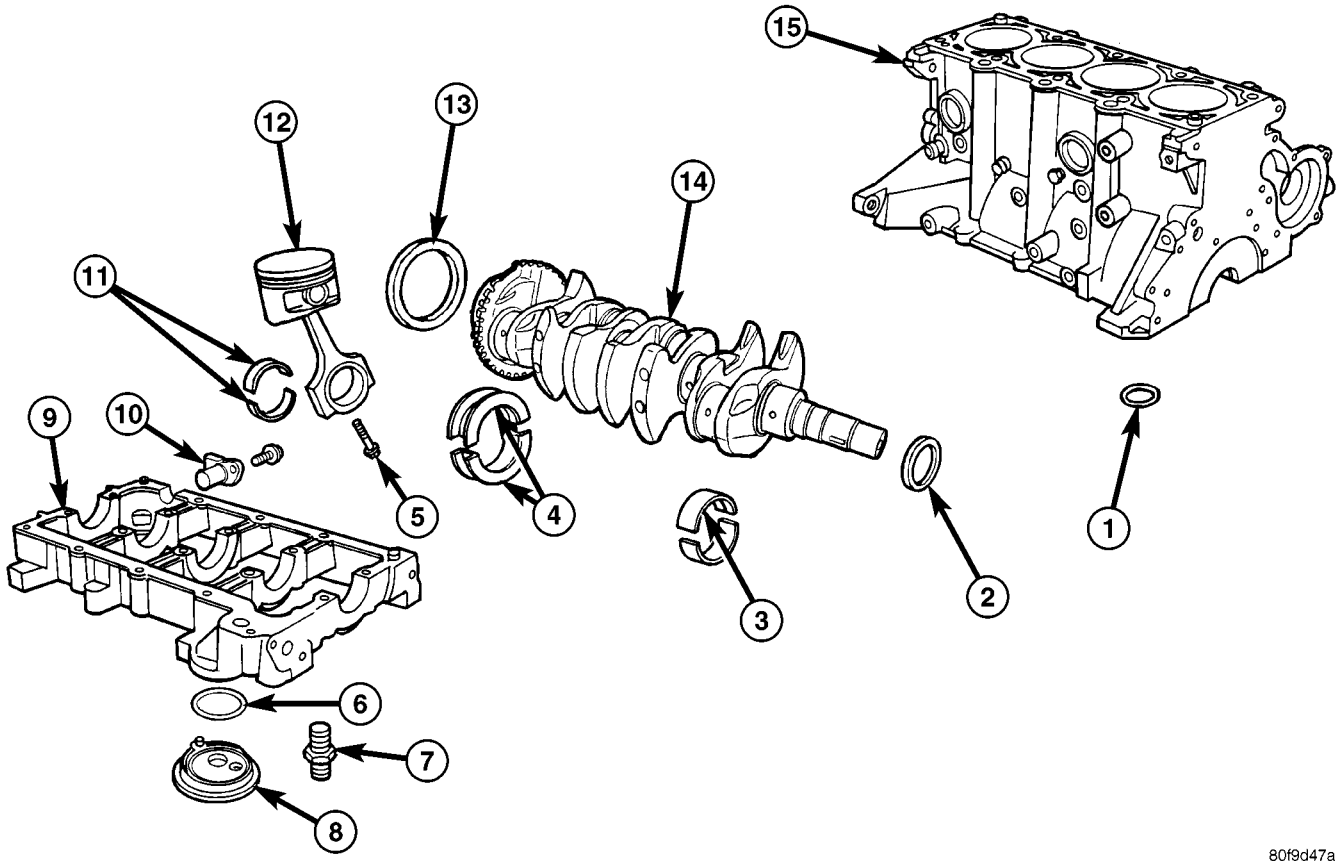

Fig. 53 Engine Block and Components

1 - OIL PASSAGE O-RING
2 - FRONT CRANKSHAFT SEAL
3 - UPPER BEARING (GROOVED)
4 - THRUST BEARINGS
5 - BOLT
6 - O-RING
7 - NIPPLE
8 - OIL FILTER ADAPTER
9 - BEDPLATE
10 - CRANKSHAFT POSITION SENSOR
11 - CONNECTING ROD BEARINGS
12 - PISTON AND CONNECTING ROD ASSEMBLY
13 - REAR CRANKSHAFT SEAL
14 - CRANKSHAFT
15 - ENGINE BLOCK

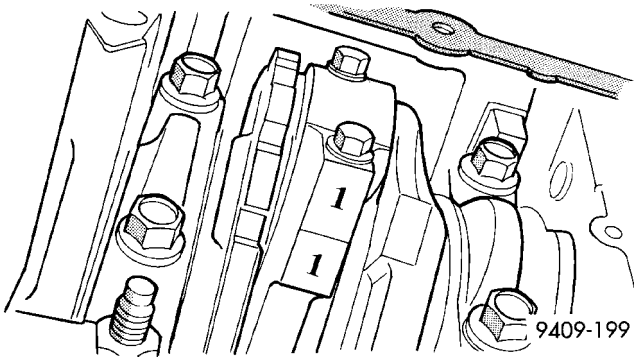

Fig. 54 Identify Connecting Rod to Cylinder

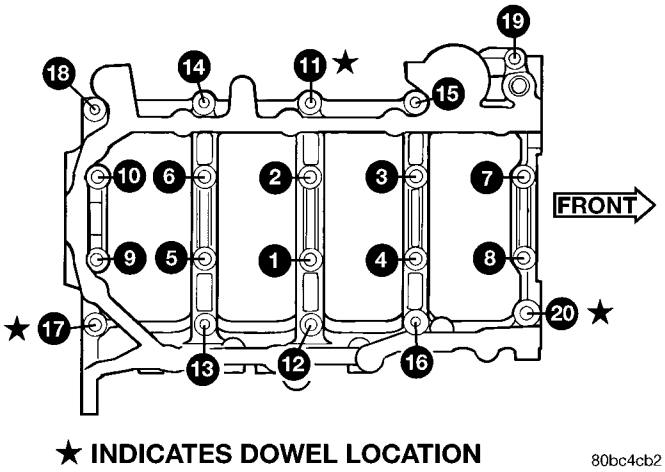

Fig. 55 Bedplate Bolts

CRANKSHAFT (Continued)

INSPECTION

The crankshaft journals should be checked for excessive wear, taper and scoring (Fig. 56). Limits of taper or out of round on any crankshaft journals should be held to 0.025 mm (0.001 in.). Journal grinding should not exceed 0.305 mm (0.012 in.) under the standard journal diameter. DO NOT grind thrust faces of No. 3 main bearing. DO NOT nick crank pin or bearing fillets. After grinding, remove rough edges from crankshaft oil holes and clean out all passages.

CAUTION: With the nodular cast iron crankshafts, it is important that the final paper or cloth polish be in the same direction as normal rotation in the engine.

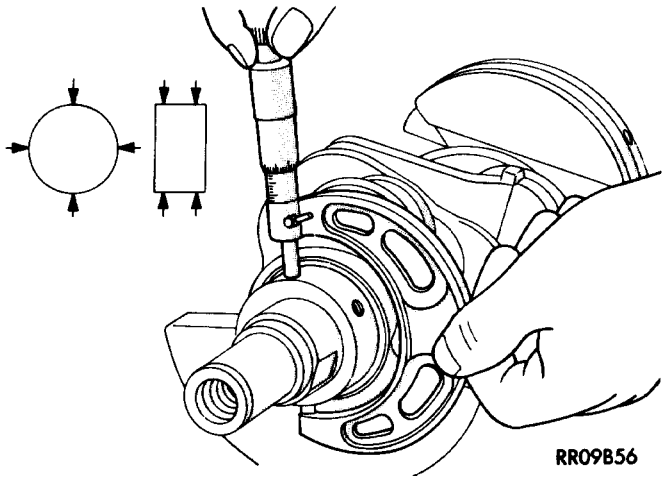

Fig. 56 Crankshaft Journal Measurements

INSTALLATION - CRANKSHAFT

CRANKSHAFT MAIN BEARING LOCATION

The crankshaft is supported in five main bearings. All upper bearing shells in the crankcase have oil grooves and holes. All lower bearing shells installed in the (bedplate) main bearing cap are plain. Crankshaft end play is controlled by a flanged bearing on the number three main bearing journal (Fig. 57).

NOTE: The upper and lower main Bearing shells are Not interchangeable. The lower shell locating tabs prevent improper installation.

(1) Install the main bearing upper shells with the lubrication groove and oil hole in the engine block. Install O-ring into recess in the block (Fig. 58).

(2) Make certain oil holes in block line up with oil hole in bearings and bearing tabs seat in the block tab slots.

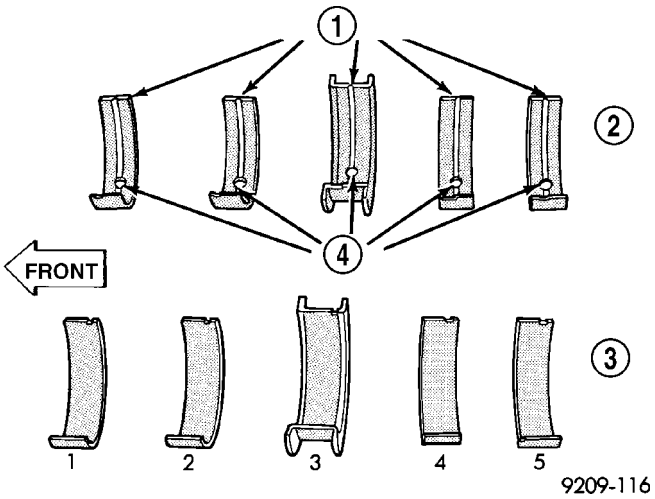

Fig. 57 Main Bearing Identification

1 - OIL GROOVES
2 - UPPER BEARINGS
3 - LOWER BEARINGS
4 - OIL HOLES

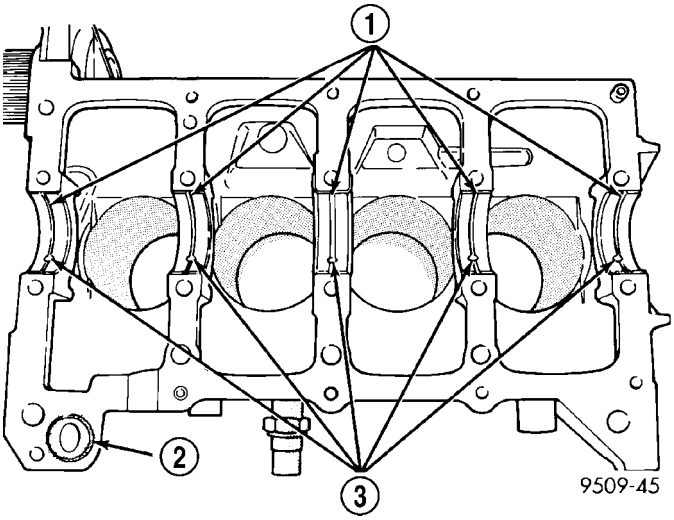

Fig. 58 Installing Main Bearing Upper Shell

1 - LUBRICATION GROOVES
2 - O-RING
3 - OIL HOLES

CAUTION: Use extreme care when handling crankshaft. Tone wheel damage can occur if crankshaft is mis-handled.

CAUTION: Do Not get oil on the bedplate mating surface. It will affect the sealer ability to seal the bedplate to cylinder block.

(3) Oil the bearings and journals and install crankshaft in engine block.

CRANKSHAFT (Continued)

CAUTION: Use only the specified anaerobic sealer on the bedplate or damage may occur to the engine.

(4) Apply a 1.5 to 2.0 mm (0.059 to 0.078 in.) bead of Mopar® Bed Plate Sealant to cylinder block as shown in (Fig. 59).

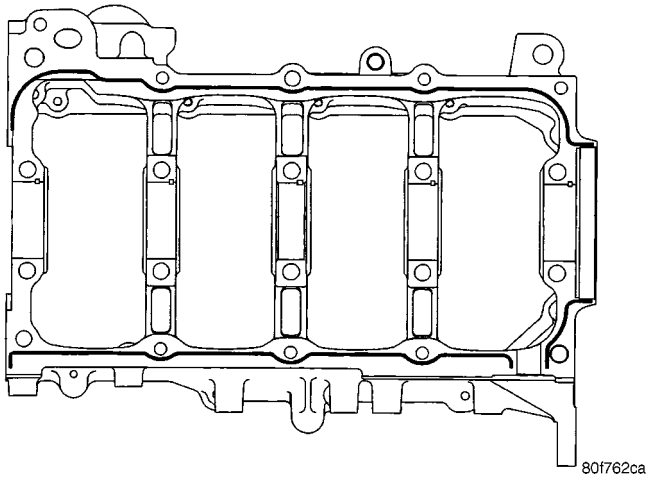

Fig. 59 Bedplate Sealing

(5) Install lower main bearings into main bearing cap/bedplate. Make certain the bearing tabs are seated into the bedplate slots. Install the main bearing/bedplate into engine block.

(6) Before installing the bolts oil threads with clean engine oil, wipe off any excess oil.

(7) Install main bearing bedplate to engine block bolts 11, 17 and 20 finger tight. Tighten these bolts down together until the bedplate contacts the cylinder block (Fig. 60).

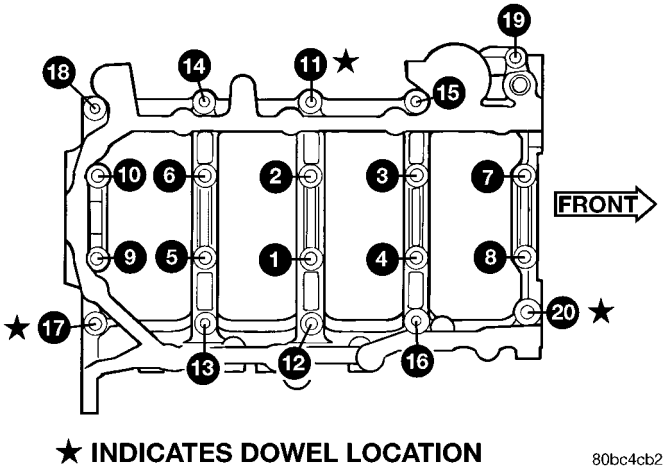

Fig. 60 Main Bearing Caps/Bedplate Torque Sequence

(8) To ensure correct thrust bearing alignment, perform the following steps:

- Step 1: Rotate crankshaft until number 4 piston is at TDC.
- Step 2: Move crankshaft rearward to limits of travel.
- Step 3: Then, move crankshaft forward to limits of travel.
- Step 4: Wedge an appropriate tool between the rear of the cylinder block **(NOT BED PLATE)** and the rear crankshaft counterweight. This will hold the crankshaft in it's furthest forward position.
- Step 5: Install and tighten bolts (1–10) in sequence shown in (Fig. 67) to 41 N·m (30 ft. lbs.).
- Step 6: Remove wedge tool used to hold crankshaft.

(9) Tighten bolts (1–10) again to 41 N·m (30 ft. lbs.) in sequence shown in (Fig. 60).

(10) Install main bearing bedplate to engine block bolts (11–20), with baffle studs in positions 12, 13 and 16 and torque each bolt to 34 N·m (25 ft. lbs.) in sequence shown in (Fig. 60).

(11) Tighten bolts (1–10) to 81 N·m (60 ft. lbs.) in sequence shown in (Fig. 60).

(12) Tighten bolts (11–20) again to 34 N·m (25 ft. lbs.) in sequence shown in (Fig. 60).

(13) After the main bearing bedplate is installed, check the crankshaft turning torque. The turning torque should not exceed 5.6 N·m (50 in. lbs.).

(14) Check crankshaft end play (Refer to 9 - ENGINE/ENGINE BLOCK/CRANKSHAFT - STANDARD PROCEDURE).

NOTE: The connecting rod cap bolts should not be reused.

(15) Before installing **NEW** bolts, lubricate the threads with clean engine oil.

(16) Install each bolt finger tight then alternately torque each bolt to assemble the cap properly.

(17) Tighten the connecting rod bolts using the 2 step torque-turn method. Tighten according to the following values:

CAUTION: Do not use a torque wrench for the second step.

1. Tighten the bolts to 27 N·m (20 ft. lbs.).
2. Tighten the connecting rod bolts an additional **1/4 TURN.**

(18) Install oil pump (Refer to 9 - ENGINE/LUBRICATION/OIL PUMP - INSTALLATION).

(19) Install oil pump pick-up tube. Torque fastener to 23 N·m (200 in. lbs.).

(20) Install the oil pan (Refer to 9 - ENGINE/LUBRICATION/OIL PAN - INSTALLATION).

(21) Install oil filter adapter and oil filter (Fig. 53) (Refer to 9 - ENGINE/LUBRICATION/OIL FILTER ADAPTER - INSTALLATION).

CRANKSHAFT (Continued)

(22) Install rear timing belt cover and camshaft sprockets (Refer to 9 - ENGINE/VALVE TIMING/TIMING BELT COVER(S) - INSTALLATION).

(23) Install front crankshaft oil seal and crankshaft sprocket (Refer to 9 - ENGINE/ENGINE BLOCK/CRANKSHAFT OIL SEAL - FRONT - INSTALLATION).

(24) Install the timing belt tensioner and pulley bracket (Refer to 9 - ENGINE/VALVE TIMING/TIMING BELT TENSIONER & PULLEY - INSTALLATION).

(25) Install the timing belt, front engine mount bracket, and front timing belt cover (Refer to 9 - ENGINE/VALVE TIMING/TIMING BELT AND SPROCKETS - INSTALLATION).

(26) Install crankshaft vibration damper (Refer to 9 - ENGINE/ENGINE BLOCK/VIBRATION DAMPER - INSTALLATION).

(27) Install crankshaft position sensor (Fig. 53).

(28) Install **NEW** oil filter.

(29) Remove engine from repair stand and position on Special Tools 6135 and 6710 Engine Dolly and Cradle. Install safety straps around the engine to cradle and tighten and lock them into position.

(30) Install the crankshaft rear oil seal (Refer to 9 - ENGINE/ENGINE BLOCK/CRANKSHAFT OIL SEAL - REAR - INSTALLATION).

(31) Install drive plate/flex plate. Apply Mopar® Lock & Seal Adhesive to bolt threads and tighten to 95 N·m (70 ft. lbs.).

(32) Attach transaxle to engine. Tighten attaching bolts to 101 N·m (75 ft. lbs.).

(33) Install the engine assembly (Refer to 9 - ENGINE - INSTALLATION).

CRANKSHAFT OIL SEAL - FRONT

REMOVAL

(1) Remove the accessory drive belts. (Refer to 7 - COOLING/ACCESSORY DRIVE/DRIVE BELTS - REMOVAL)

(2) Remove the crankshaft vibration damper. (Refer to 9 - ENGINE/ENGINE BLOCK/VIBRATION DAMPER - REMOVAL)

(3) Remove the timing belt. (Refer to 9 - ENGINE/VALVE TIMING/TIMING BELT/CHAIN AND SPROCKETS - REMOVAL)

(4) Remove the crankshaft sprocket using Special Tool 6793 and insert C-4685-C2 (Fig. 61).

(5) Remove the crankshaft sprocket key from crankshaft (Fig. 62).

CAUTION: Do not nick shaft seal surface or seal bore.

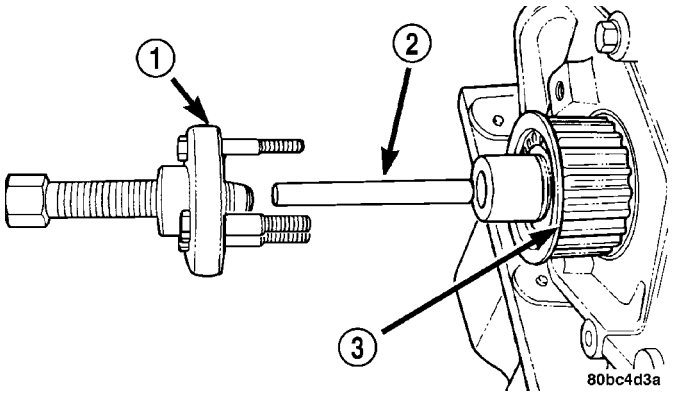

Fig. 61 Crankshaft Sprocket—Removal

1 - SPECIAL TOOL 6793
2 - SPECIAL TOOL C-4685–C2
3 - CRANKSHAFT SPROCKET

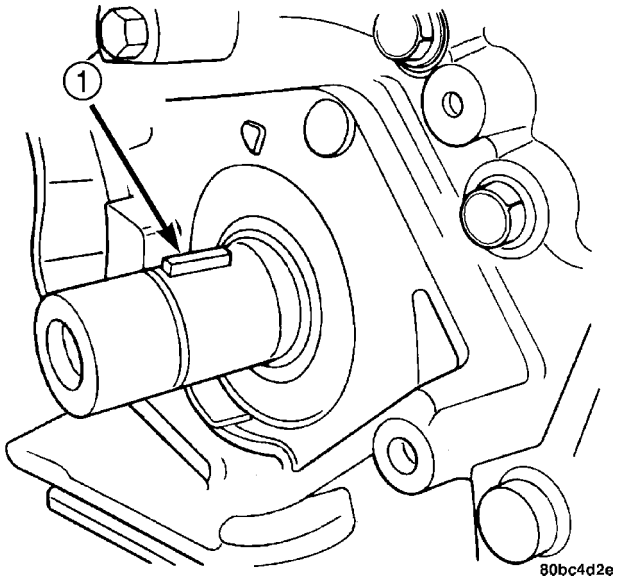

Fig. 62 Crankshaft Key

1 - CRANKSHAFT KEY

(6) Using Special Tool 6771, remove front crankshaft oil seal (Fig. 63). Do not damage the seal contact area on the crankshaft.

INSTALLATION

(1) Position seal into opening with seal spring towards the inside of engine. Using Special Tool 6780-1 (Fig. 64), install seal until flush with cover.

(2) Install the crankshaft sprocket key (Fig. 62).

(3) Install the crankshaft sprocket (Fig. 65) using Special Tool 6792.

NOTE: Make sure the word “front” on the sprocket is facing outward.

CRANKSHAFT OIL SEAL - FRONT (Continued)

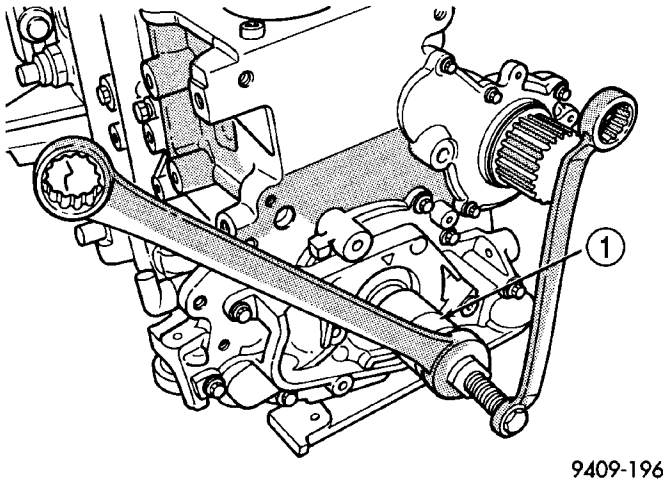

Fig. 63 Front Crankshaft Oil Seal—Removal

1 - SPECIAL TOOL 6771

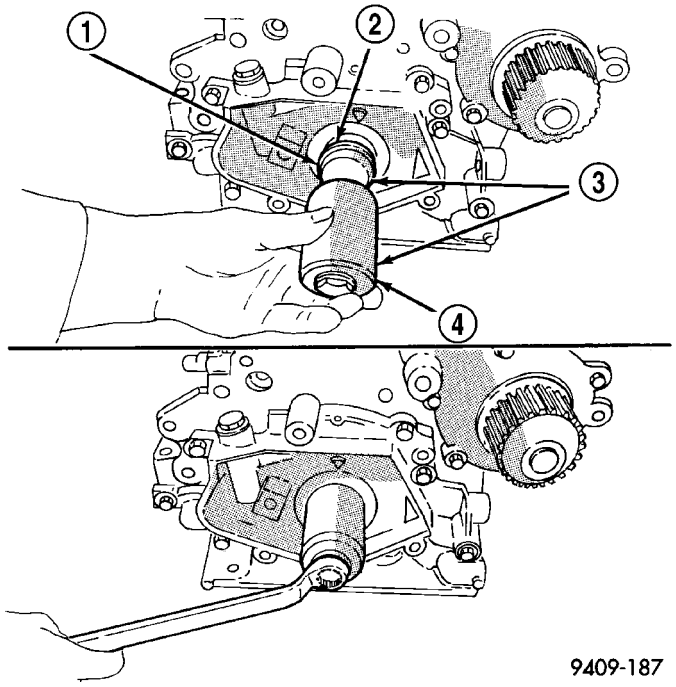

Fig. 64 Front Crankshaft Oil Seal - Installation

1 - PROTECTOR
2 - SEAL
3 - SPECIAL TOOL 6780–1
4 - INSTALLER

CAUTION: Use of Special Tool 6792 is required to install the crankshaft sprocket to the proper depth. Failure to use this tool will cause improper timing belt tracking.

(4) Install the timing belt. (Refer to 9 - ENGINE/VALVE TIMING/TIMING BELT/CHAIN AND SPROCKETS - INSTALLATION)

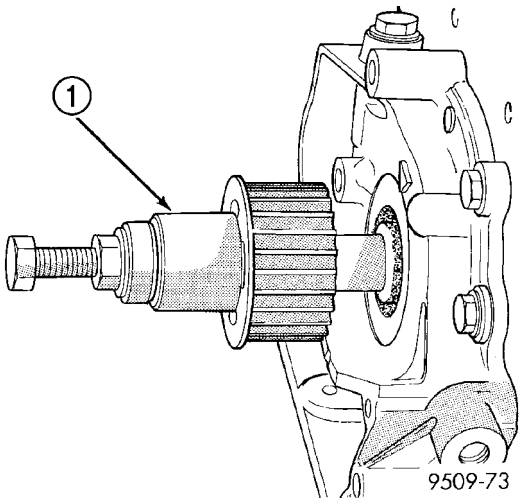

Fig. 65 Crankshaft Sprocket - Installation

1 - SPECIAL TOOL 6792

(5) Install crankshaft vibration damper. (Refer to 9 - ENGINE/ENGINE BLOCK/VIBRATION DAMPER - INSTALLATION)

(6) Install accessory drive belts. (Refer to 7 - COOLING/ACCESSORY DRIVE/DRIVE BELTS - INSTALLATION)

CRANKSHAFT OIL SEAL - REAR

REMOVAL

(1) Remove transaxle. Refer to TRANSMISSION/TRANSAXLE - REMOVAL for procedure.

(2) Remove flex plate.

(3) Insert a 3/16 flat bladed screwdriver between the dust lip and the metal case of the crankshaft seal. Angle the screwdriver (Fig. 66)through the dust lip against metal case of the seal. Pry out seal.

CAUTION: Do not permit the screwdriver blade to contact crankshaft seal surface. Contact of the screwdriver blade against crankshaft edge (chamfer) is permitted.

INSTALLATION

CAUTION: If burr or scratch is present on the crankshaft edge (chamfer), cleanup with 400 grit sand paper to prevent seal damage during installation of new seal.

NOTE: When installing seal, no lube on seal is needed.

CRANKSHAFT OIL SEAL - REAR (Continued)

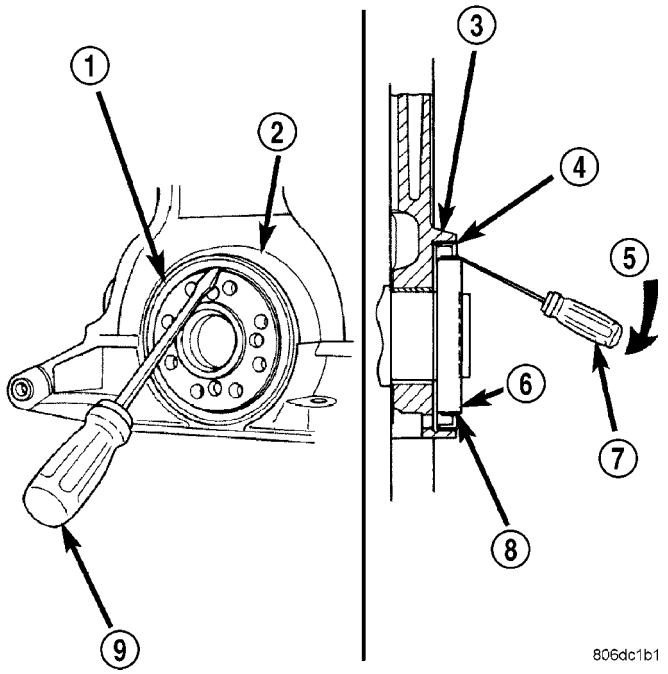

Fig. 66 Rear Crankshaft Oil Seal - Removal

1 - REAR CRANKSHAFT SEAL
2 - ENGINE BLOCK
3 - ENGINE BLOCK
4 - REAR CRANKSHAFT SEAL METAL CASE
5 - PRY IN THIS DIRECTION
6 - CRANKSHAFT
7 - SCREWDRIVER
8 - REAR CRANKSHAFT SEAL DUST LIP
9 - SCREWDRIVER

(1) Place Special Tool 6926-1 Seal Guide on crankshaft (Fig. 67).

(2) Position seal over guide tool (Fig. 67). Guide tool should remain on crankshaft during installation of seal. Ensure that the lip of the seal is facing towards the crankcase during installation.

CAUTION: If the seal is driven into the block past flush, this may cause an oil leak.

(3) Drive the seal into the block using Special Tool 6926-2 and handle C-4171 (Fig. 68) until the tool bottoms out against the block (Fig. 69).

(4) Install flex plate. Apply Mopar® Lock & Seal Adhesive to bolt threads and tighten bolts to 95 N·m (70 ft. lbs.).

(5) Install transaxle. Refer to TRANSMISSION/TRANSAXLE - INSTALLATION for procedure.

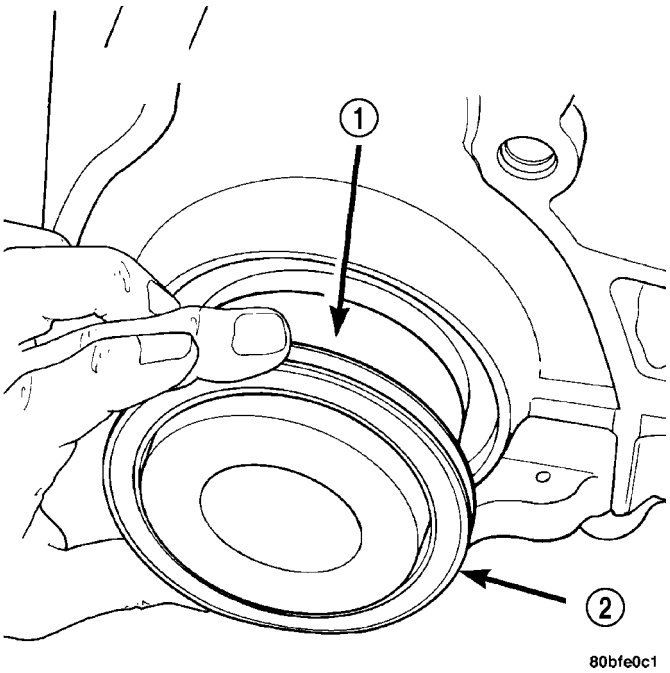

Fig. 67 Rear Crankshaft Seal and Special Tool 6926-1

1 - SPECIAL TOOL 6926–1 PILOT
2 - SEAL

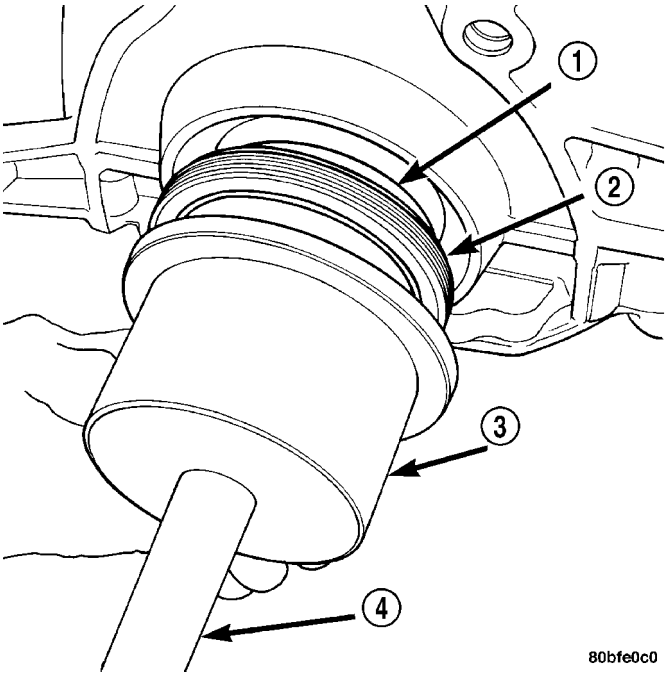

Fig. 68 Crankshaft Seal and Special Tools 6926-2 & C-4171

1 - SPECIAL TOOL 6926–1 PILOT
2 - SEAL
3 - SPECIAL TOOL 6926–2 INSTALLER
4 - SPECIAL TOOL C-4171

CRANKSHAFT OIL SEAL - REAR (Continued)

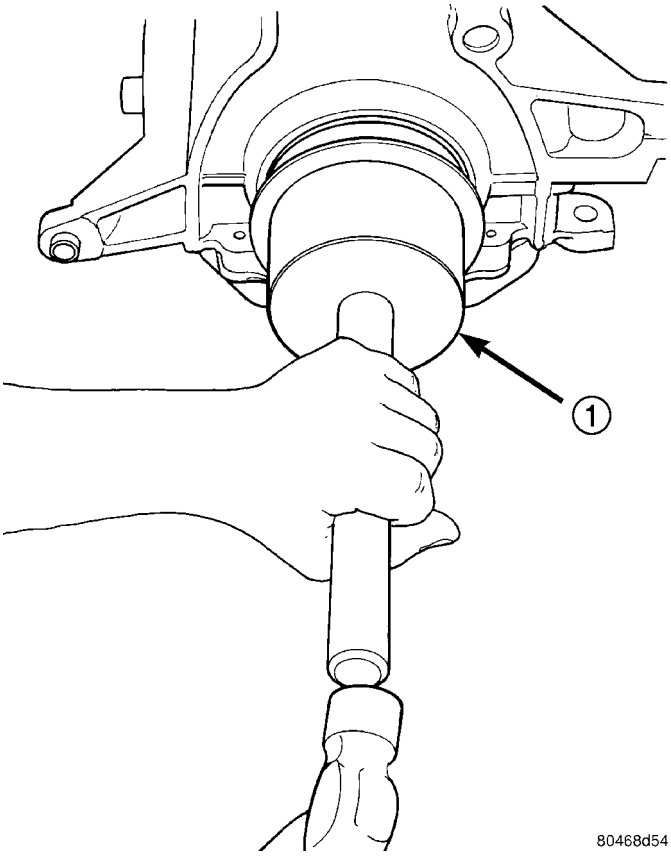

Fig. 69 Rear Crankshaft Seal—Installation

1 - SPECIAL TOOL 6926–2 INSTALLER

PISTON & CONNECTING ROD

DESCRIPTION

NOTE: The engine DOES NOT have provisions for a free wheeling valve train. Non free wheeling valve train means, in the event of a broken timing belt, pistons will contact the valves.

The pistons are made of a cast aluminum alloy. The pistons have pressed-in pins attached to forged powdered metal connecting rods. The pistons pin is offset 1 mm (0.0394 in.) towards the thrust side of the piston. The connecting rods are a cracked cap design and are not repairable. Hex head cap screws are used to provide alignment and durability in the assembly. The pistons and connecting rods are serviced as an assembly.

STANDARD PROCEDURE - PISTON TO CYLINDER BORE FITTING

NOTE: Pistons and cylinder bores should be measured at normal room temperature, 70°F (21°C).

Piston and cylinder wall must be clean and dry. Piston diameter should be measured 90 degrees to piston pin about 14 mm (9/16 inch.) from the bottom of the skirt as shown in (Fig. 70). Cylinder bores should be measured halfway down the cylinder bore and transverse (measurement location B) to the engine crankshaft center line shown in (Fig. 71). (Refer to 9 - ENGINE - SPECIFICATIONS) Correct piston to bore clearance must be established in order to assure quiet and economical operation.

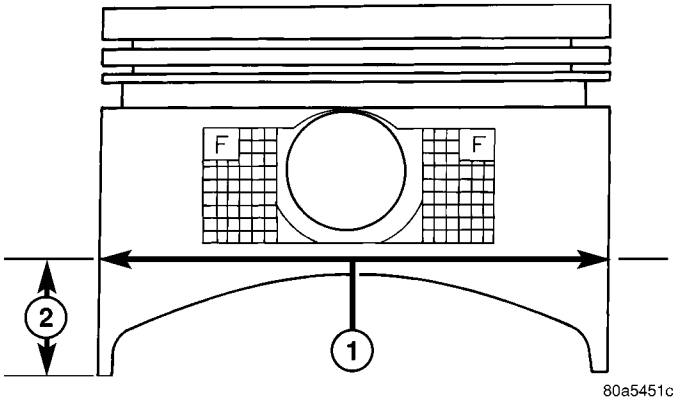

Fig. 70 PISTON MEASUREMENT LOCATION

1 - PISTON DIAMETER
2 - 14 mm (9/16 in.)

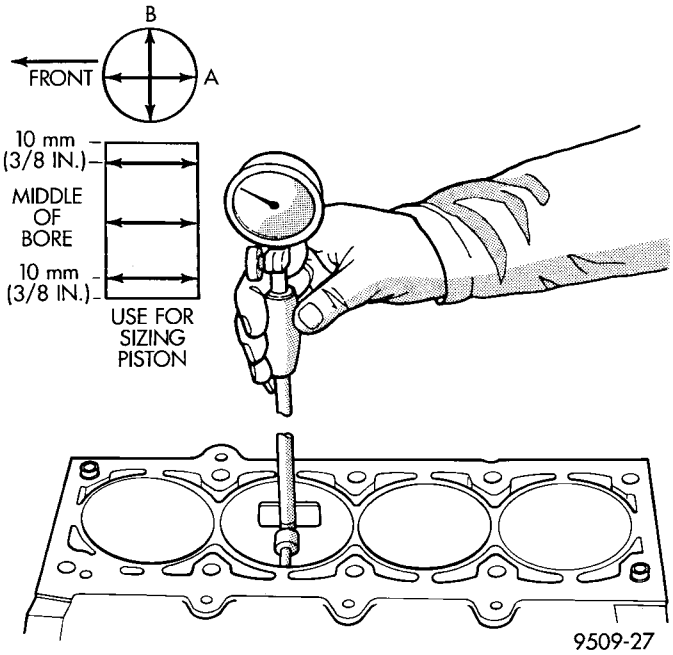

Fig. 71 Cylinder Bore Measurement

PISTON & CONNECTING ROD (Continued)

REMOVAL

(1) Remove the cylinder head (Refer to 9 - ENGINE/CYLINDER HEAD - REMOVAL).

(2) Remove the oil pan (Refer to 9 - ENGINE/LUBRICATION/OIL PAN - REMOVAL).

(3) Remove top ridge of cylinder bores with a reliable ridge reamer before removing pistons from cylinder block. **Be sure to keep tops of pistons covered during this operation**. Mark piston with matching cylinder number (Fig. 72).

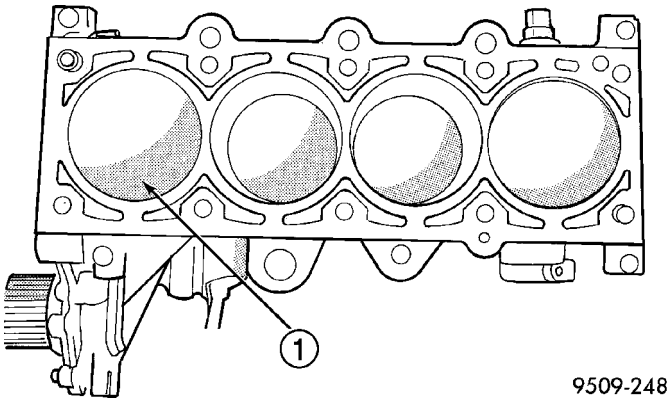

Fig. 72 Piston Markings

1 - WEIGHT DESIGNATION AND DIRECTIONAL ARROW WILL BE IMPRINTED IN THIS AREA

CAUTION: DO NOT use a number stamp or a punch to mark connecting rods. Damage to connecting rod could occur.

(4) Using a permanent ink or paint marker, identify cylinder number on each connecting rod cap (Fig. 73).

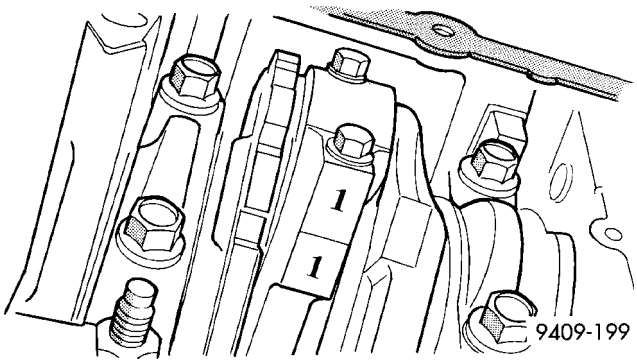

Fig. 73 Identify Connecting Rod to Cylinder

(5) Pistons will have a stamping in the approximate location shown in (Fig. 72). These stamps will be either a directional arrow or a weight identification for the assembly. L is for light and H is for heavy. These assemblies should all be the same weight class. Service piston assemblies are marked with a S and can be used with either L or H production assemblies. The weight designation stamps should face toward the timing belt side of the engine.

(6) Pistons and connecting rods must be removed from top of cylinder block. Rotate crankshaft so that each connecting rod is centered in cylinder bore.

(7) Remove connecting rod bolts and cap. Care should be taken not to damage the fracture rod and cap surfaces.

NOTE: Do not reuse connecting rod bolts.

CAUTION: Care must be taken not to damage the fractured rod and cap joint surfaces, as engine damage many occur.

(8) To protect crankshaft journal and fractured rod surfaces, install Special Tool 8189, connecting rod guides onto connecting rod (Fig. 74). Carefully push each piston and rod assembly out of cylinder bore.

(9) Remove Special Tool 8189, connecting rod guides and re-install bearing cap on the mating rod.

NOTE: Piston and rods are serviced as an assembly.

(10) Repeat procedure for each piston and connecting rod assembly.

(11) Remove piston rings (Refer to 9 - ENGINE/ENGINE BLOCK/PISTON RINGS - REMOVAL).

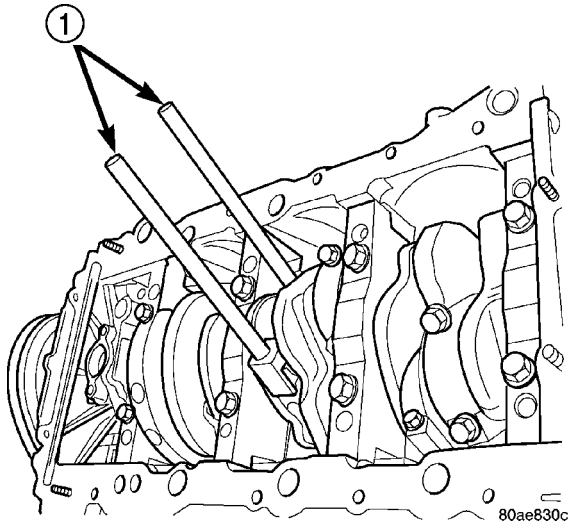

Fig. 74 Connecting Rod Guides—Typical

1 - SPECIAL TOOL 8189 CONNECTING ROD GUIDES

INSTALLATION

(1) Install piston rings on piston (Refer to 9 - ENGINE/ENGINE BLOCK/PISTON RINGS - INSTALLATION).

(2) Before installing pistons and connecting rod assemblies into the bore, ensure the compression ring

PISTON & CONNECTING ROD (Continued)

gaps are staggered, and neither is in line with the oil ring rail gap (Fig. 82).

(3) Before installing the ring compressor, ensure the oil ring expander ends are butted and the rail gaps are located as shown in (Fig. 82). As viewed from top.

(4) Immerse the piston head and rings in clean engine oil, slide the ring compressor, over the piston (Fig. 75). **Be sure position of rings does not change during this operation**.

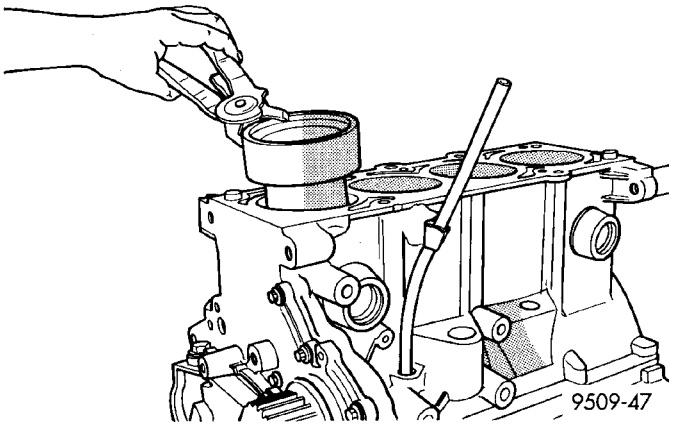

Fig. 75 Installing Piston

(5) The weight stamp designation L or H will be in the front half of the piston should face toward the front of the engine (Fig. 72).

(6) Rotate crankshaft so that the connecting rod journal is on the center of the cylinder bore. Lubricate connecting rod journal with clean engine oil.

(7) Install connecting rod upper bearing half into connecting rod. Install Special Tool 8189, connecting rod guides onto connecting rod (Fig. 74).

(8) Insert rod and piston assembly into cylinder bore and carefully guide rod over the crankshaft journal.

(9) Tap the piston down in cylinder bore, using a hammer handle. At the same time, guide connecting rod into position on connecting rod journal.

(10) Remove Special Tool 8189, connecting rod guides.

NOTE: The connecting rod cap bolts should not be reused.

(11) Before installing the **NEW** bolts, the threads should be coated with clean engine oil.

(12) Install connecting rod lower bearing half into connecting rod cap. Install connecting rod cap.

(13) Install each bolt finger tight then alternately torque each bolt to assemble the cap properly.

(14) Tighten the connecting rod bolts using the 2 step torque-turn method. Tighten according to the following values:

CAUTION: Do not use a torque wrench for the second step.

1. Tighten the bolts to 27 N·m (20 ft. lbs.).
2. Tighten the connecting rod bolts an additional **1/4 TURN.**

(15) Using a feeler gauge, check connecting rod side clearance (Fig. 76). (Refer to 9 - ENGINE - SPECIFICATIONS) for connecting rod side clearance.

(16) Install the cylinder head (Refer to 9 - ENGINE/CYLINDER HEAD - INSTALLATION).

(17) Install the oil pan (Refer to 9 - ENGINE/LUBRICATION/OIL PAN - INSTALLATION).

CONNECTING ROD BEARINGS

STANDARD PROCEDURE

CONNECTING ROD - FITTING

(1) For measuring connecting rod bearing clearance procedure and use of Plastigage(Refer to 9 - ENGINE - STANDARD PROCEDURE). For bearing clearance refer to Engine Specifications. (Refer to 9 - ENGINE - SPECIFICATIONS)

NOTE: The rod bearing bolts should not be reused.

(2) Before installing the **NEW** bolts the threads should be oiled with clean engine oil.

(3) Install each bolt finger tight then alternately torque each bolt to assemble the cap properly.

(4) Tighten the connecting rod bolts using the 2 step torque-turn method. Tighten according to the following values:

CAUTION: Do not use a torque wrench for the second step.

1. Tighten the bolts to 27 N·m (20 ft. lbs.).
2. Tighten the connecting rod bolts an additional **1/4 TURN.**

(5) Using a feeler gauge, check connecting rod side clearance (Fig. 76). Refer to clearance specifications (Refer to 9 - ENGINE - SPECIFICATIONS).

CONNECTING ROD BEARINGS (Continued)

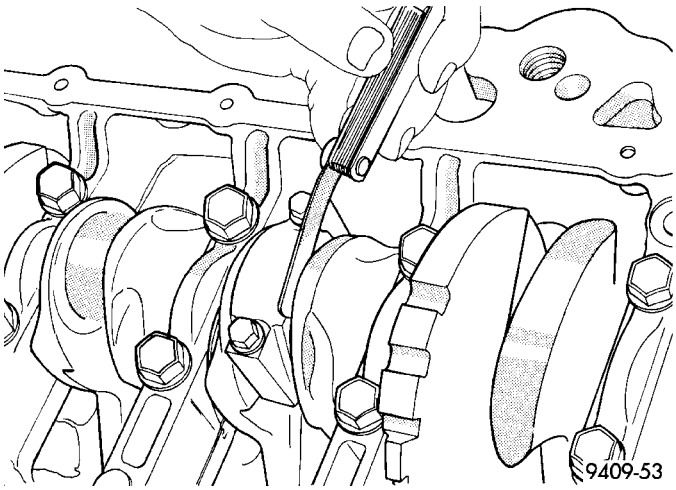

Fig. 76 Connecting Rod Side Clearance

PISTON RINGS

STANDARD PROCEDURE - PISTON RING - FITTING

(1) Wipe cylinder bore clean. Insert ring and push down with piston to ensure it is square in bore. The ring gap measurement must be made with the ring positioned below normal ring travel in the cylinder bore. Check gap with feeler gauge (Fig. 77). For piston ring specifications (Refer to 9 - ENGINE - SPECIFICATIONS).

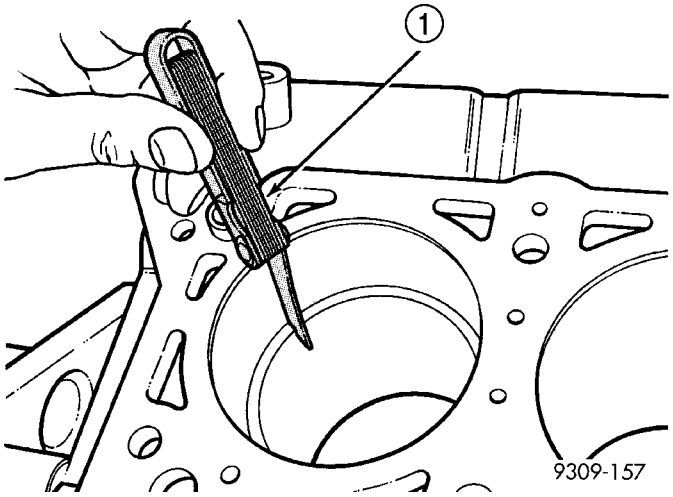

Fig. 77 Piston Ring Gap

1 - FEELER GAUGE

(2) Check piston ring to groove side clearance (Fig. 78). For piston ring specifications (Refer to 9 - ENGINE - SPECIFICATIONS).

REMOVAL

(1) Using a suitable ring expander, remove upper and intermediate piston rings (Fig. 79).

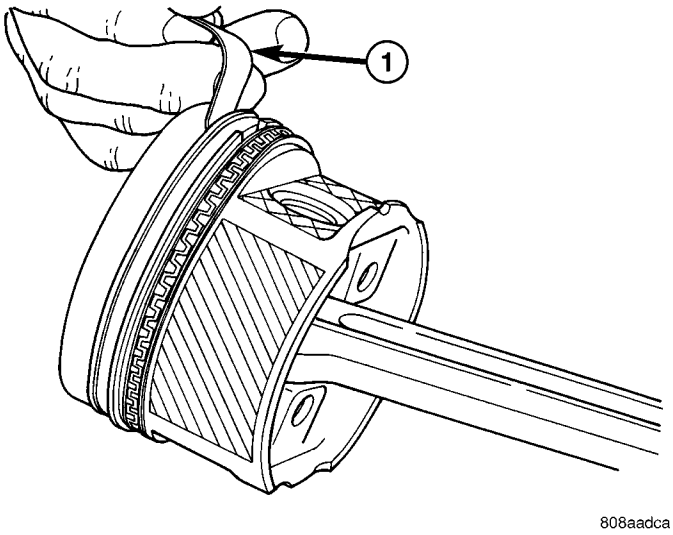

Fig. 78 Piston Ring Side Clearance

1 - FEELER GAUGE

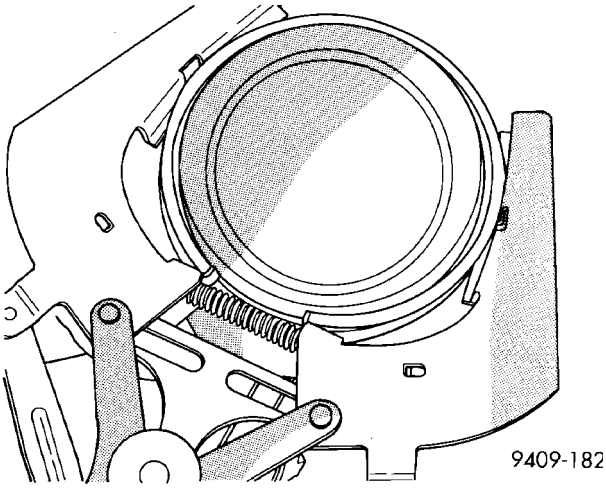

Fig. 79 Piston Rings—Removing and Installing

(2) Remove the upper oil ring side rail, lower oil ring side rail and then oil ring expander from piston.

(3) Clean ring grooves of any carbon deposits.

INSTALLATION

NOTE: The identification mark on face of upper and intermediate piston rings must point toward top of piston.

Install rings with manufacturers identification mark facing up, to the top of the piston (Fig. 80).

CAUTION: Install piston rings in the following order:

1. Oil ring expander.
2. Upper oil ring side rail.
3. Lower oil ring side rail.

PISTON RINGS (Continued)

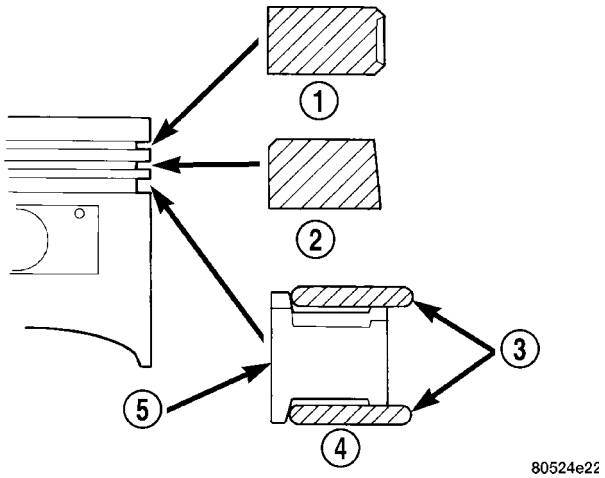

Fig. 80 Piston Ring Installation

1 - NO. 1 PISTON RING
2 - NO. 2 PISTON RING
3 - SIDE RAIL
4 - OIL RING
5 - SPACER EXPANDER

4. No. 2 Intermediate piston ring.
5. No. 1 Upper piston ring.

(1) Install oil ring expander (Fig. 80).

(2) Install upper side rail first and then the lower side rail. Install the side rails by placing one end between the piston ring groove and the oil ring expander. Hold end firmly and press down the portion to be installed until side rail is in position. **Do not use a piston ring expander (Fig. 81).**

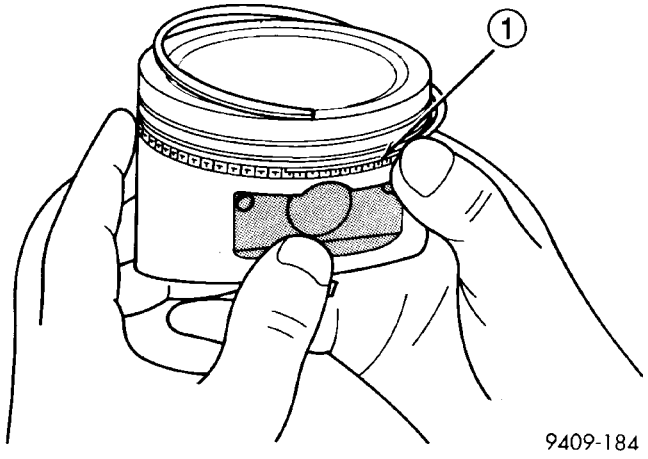

Fig. 81 Installing Side Rail

1 - SIDE RAIL END

(3) Install No. 2 piston ring and then No. 1 piston ring (Fig. 80).

(4) Position piston ring end gaps as shown in (Fig. 82).

(5) Position oil ring expander gap at least 45° from the side rail gaps but **not** on the piston pin center or on the thrust direction. Staggering ring gap is important for oil control.

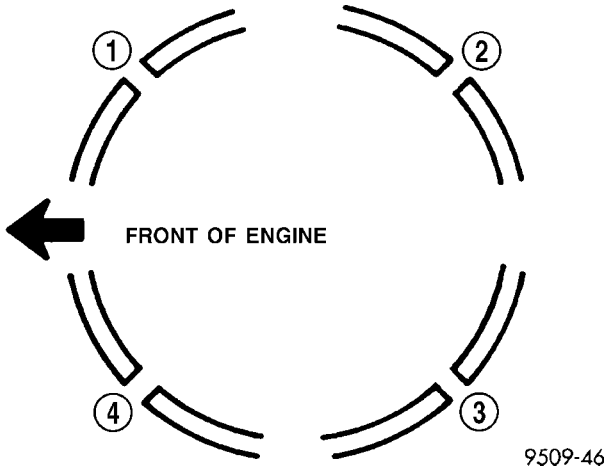

Fig. 82 Piston Ring End Gap Position

1 - GAP OF LOWER SIDE RAIL
2 - NO. 1 RING GAP
3 - GAP OF UPPER SIDE RAIL
4 - NO. 2 RING GAP AND SPACER EXPANDER GAP

STRUCTURAL COLLAR

REMOVAL

(1) Raise vehicle on hoist.

NOTE: To remove transaxle dust cover, the front bending strut must be removed.

(2) Remove structural collar from oil pan to transaxle (Fig. 83).

INSTALLATION

CAUTION: The torque procedure for the structural collar must be followed, as damage to oil pan or collar could occur.

(1) Install the structural collar (Fig. 83) using the following 3 step torque sequence:

- Step 1: Install the collar to oil pan bolts and tighten to 3 N·m (30 in. lbs.).
- Step 2: Install collar to transaxle bolts and tighten to 108 N·m (80 ft. lbs.).
- Step 3: Final torque the collar to oil pan bolts to 54 N·m (40 ft. lbs.).

(2) Lower vehicle.

STRUCTURAL COLLAR (Continued)

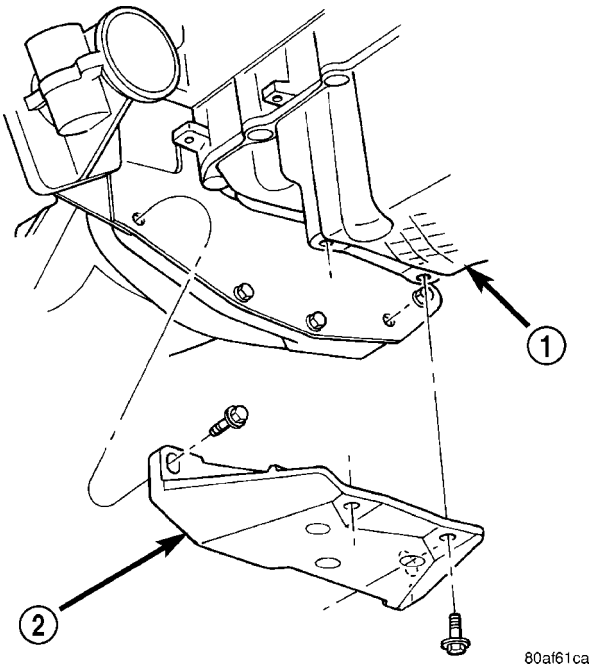

Fig. 83 Structural Collar - Removal/Installation

1 - OIL PAN
2 - STRUCTURAL COLLAR

VIBRATION DAMPER

REMOVAL

(1) Remove accessory drive belts (Refer to 7 - COOLING/ACCESSORY DRIVE/DRIVE BELTS - REMOVAL).

(2) Remove crankshaft damper bolt.

(3) Remove damper by using Special Tool 1026 and Insert 6827A (Fig. 84).

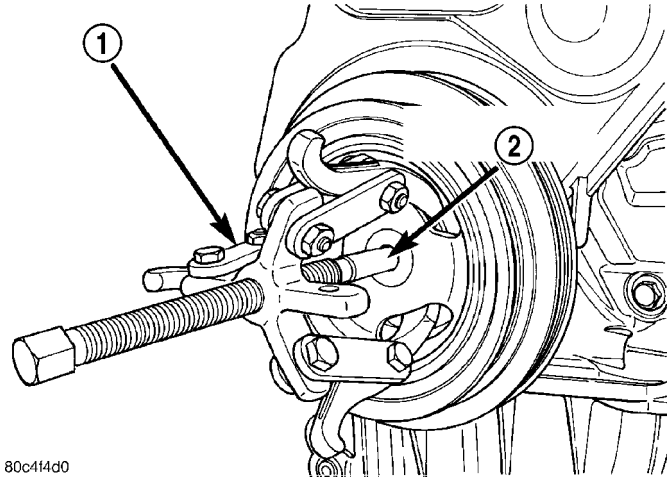

Fig. 84 Crankshaft Damper—Removal

1 - SPECIAL TOOL 1026 3 - JAW PULLER
2 - SPECIAL TOOL 6827A INSERT

INSTALLATION

(1) Install crankshaft damper using Special Tool 6792 (M12 1.75 x 150 mm bolt, washer, thrust bearing and nut).

NOTE: Lubricate the threads of the M12 1.75 x 150 mm bolt using Mopar® Nickel Anti-seize Compound or equivalent, before beginning to press the damper on.

(2) Install crankshaft damper bolt and tighten to 136 N·m (100 ft. lbs.) (Fig. 85).

(3) Install accessory drive belts (Refer to 7 - COOLING/ACCESSORY DRIVE/DRIVE BELTS - INSTALLATION).

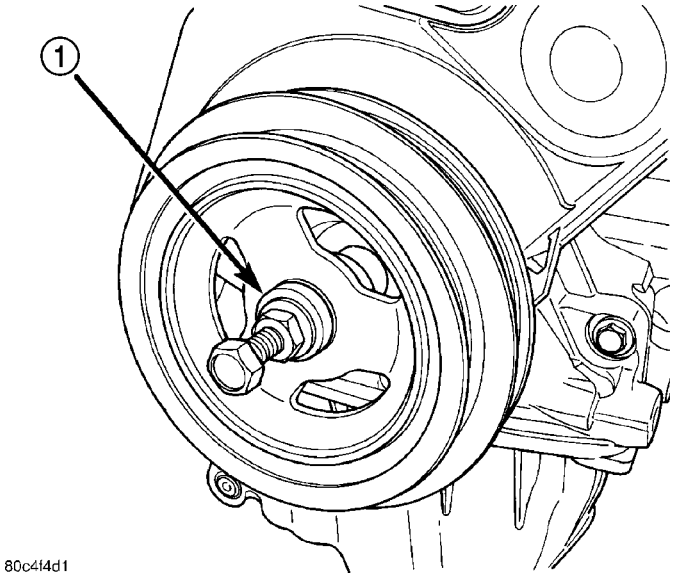

Fig. 85 Crankshaft Damper—Installation

1 - SPECIAL TOOL 6792

ENGINE MOUNTING

DESCRIPTION

The engine mounting system (Fig. 87) and (Fig. 89) consists of a four-point system utilizing two load-carrying mounts and two torque struts. The load-carrying mounts are located on each frame rail. The right mount is a hydro-elastic mount and left mount is a conventional elastomeric isolator. The two torque controlling struts are attached at the front of the engine, straddling the right side load-carrying mount. The upper strut connects to the suspension strut tower and the lower to the suspension cross-member.

OPERATION

The four-point engine mounting system minimizes the transmission of structure-borne engine noise to the passenger compartment. The load-carrying right

ENGINE MOUNTING (Continued)

and left mounts dampen and isolate vertical motion and vibration. The two struts absorbs torque reaction forces and torsional vibrations.

LEFT MOUNT

REMOVAL

(1) Remove air cleaner assembly.
(2) Disconnect negative cable from battery.
(3) Remove bolts attaching the power distribution center (PDC) bracket to left mount and battery tray (Fig. 86).
(4) Support transaxle with a suitable jack.
(5) Remove mount to transaxle bolts (Fig. 87).
(6) Remove left mount bracket to body frame rail fasteners (Fig. 87).
(7) Remove mount.

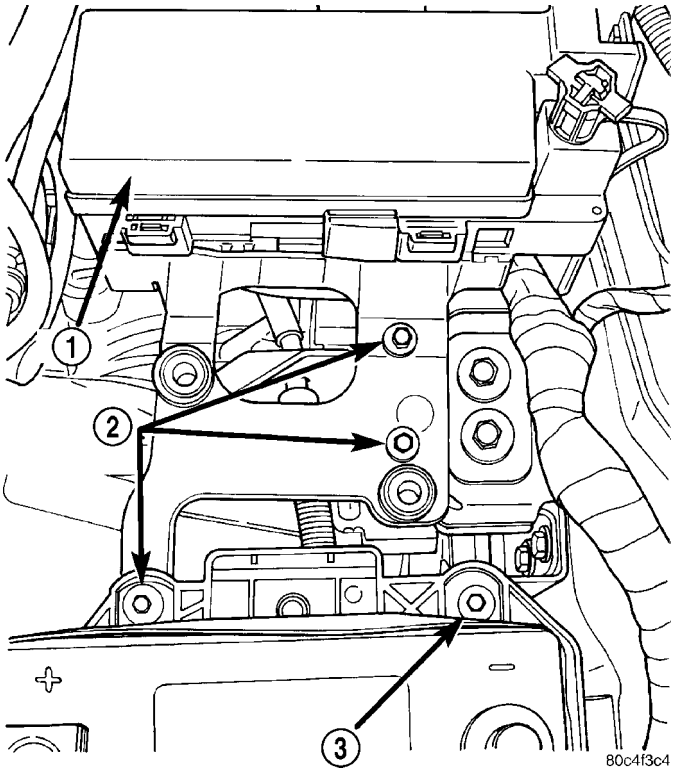

Fig. 86 PDC Bracket Attaching Bolts

1 - PDC
2 - PDC BRACKET BOLTS
3 - BATTERY TRAY BOLT

INSTALLATION

(1) Install engine mount bracket to body frame rail and tighten fasteners to 28 N·m (250 in. lbs.) (Fig. 87).
(2) Position engine/transaxle for installation of mount to transaxle bolts. Install and tighten bolts to 68 N·m (50 ft. lbs.) (Fig. 87).
(3) Remove jack from under transaxle.

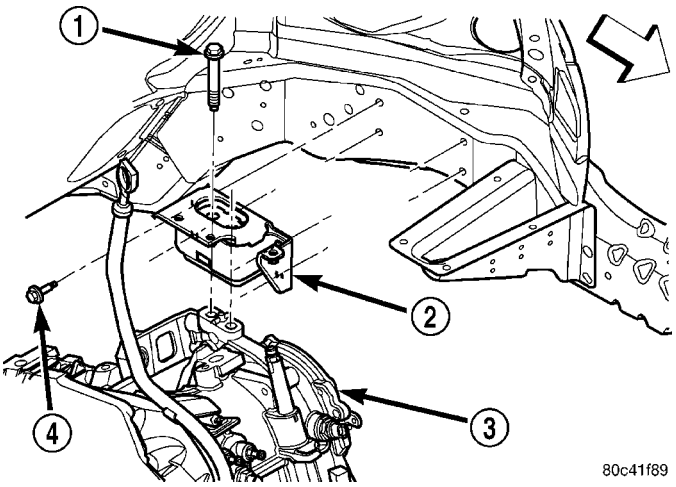

Fig. 87 Left Mount

1 - BOLT
2 - LEFT MOUNT
3 - TRANSAXLE
4 - BOLT

(4) Install bolts attaching the power distribution center (PDC) bracket to left mount and battery tray (Fig. 86).
(5) Connect negative cable to battery.
(6) Install air cleaner assembly.

RIGHT MOUNT

REMOVAL

(1) Remove the engine assembly for the required clearance to access the engine mount (Refer to 9 - ENGINE - REMOVAL).

NOTE: The right engine mount attaching holes are slightly oversize to compensate for manufacturing tolerances. The mount has been set at the manufacturing plant for proper powertrain alignment. Therefore, it is necessary to mark the position of the mount before the attaching bolts are loosened.

(2) Using a permanent ink marker or equivalent, mark the position of engine mount to the body frame rail.
(3) Remove bolts attaching mount to body (Fig. 88).
(4) Remove mount.

INSTALLATION

(1) Position mount into the original position on body frame rail (Fig. 88).

NOTE: Engine mount must be installed in the original position on body frame rail. If mount was not marked or frame rail was replaced, perform the following procedure.

RIGHT MOUNT (Continued)

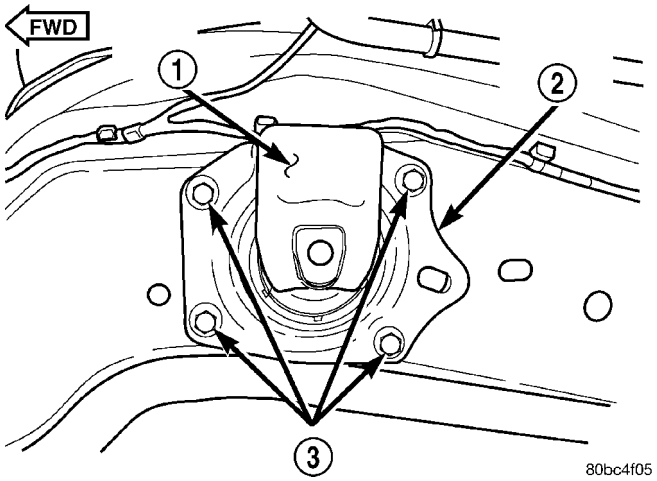

Fig. 88 Engine Mount—Right

1 - SNUBBER PAD
2 - RIGHT ENGINE MOUNT
3 - BOLTS

(2) Perform the following procedure if the mount position was not previously marked, or the frame rail was replaced:

(a) Insert new mount loosely in frame rail.

(b) Align the four holes in the mount with the mating holes in the rail such that the holes are concentric (frame rail holes centered in the mount holes).

(c) Using a permanent ink marker or equivalent, mark the position of engine mount to the body frame rail while maintaining mounting hole concentricity.

(3) Ensure the mount maintains originally marked position and install mount bolts. Tighten bolts to 28 N·m (250 in. lbs.) (Fig. 88).

(4) Install the engine assembly (Refer to 9 - ENGINE - INSTALLATION).

TORQUE STRUT

REMOVAL

REMOVAL - UPPER

(1) Remove bolts attaching upper torque strut to shock tower bracket and engine mount bracket (Fig. 89).

(2) Remove timing belt front upper cover (if A/C equipped).

(3) Remove the upper torque strut.

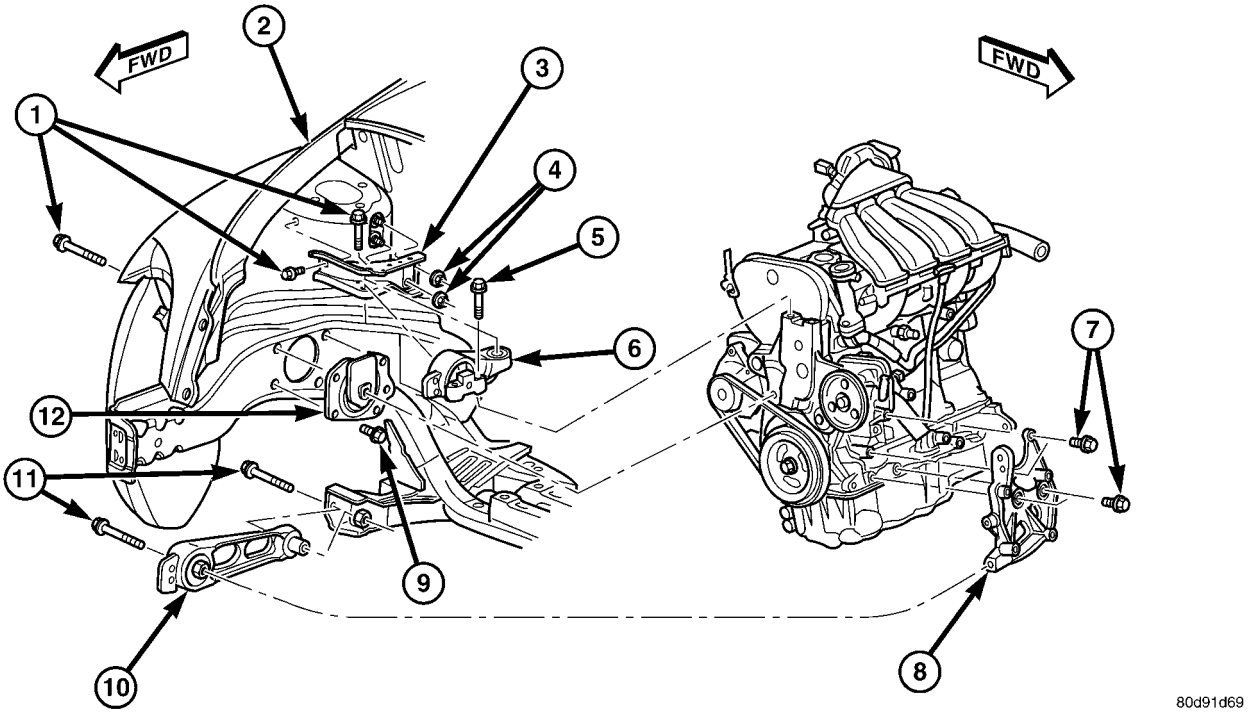

Fig. 89 Engine Mounting - Right Side

1 - BOLT
2 - RIGHT FENDER
3 - UPPER TORQUE STRUT BRACKET
4 - NUTS
5 - BOLT
6 - UPPER TORQUE STRUT
7 - BOLT
8 - LOWER TORQUE STRUT BRACKET
9 - BOLT
10 - LOWER TORQUE STRUT
11 - BOLT
12 - RIGHT ENGINE MOUNT

TORQUE STRUT (Continued)

REMOVAL - LOWER

(1) Raise vehicle on hoist.

(2) Remove accessory drive belt splash shield (Fig. 90).

(3) Remove pencil strut (Fig. 91).

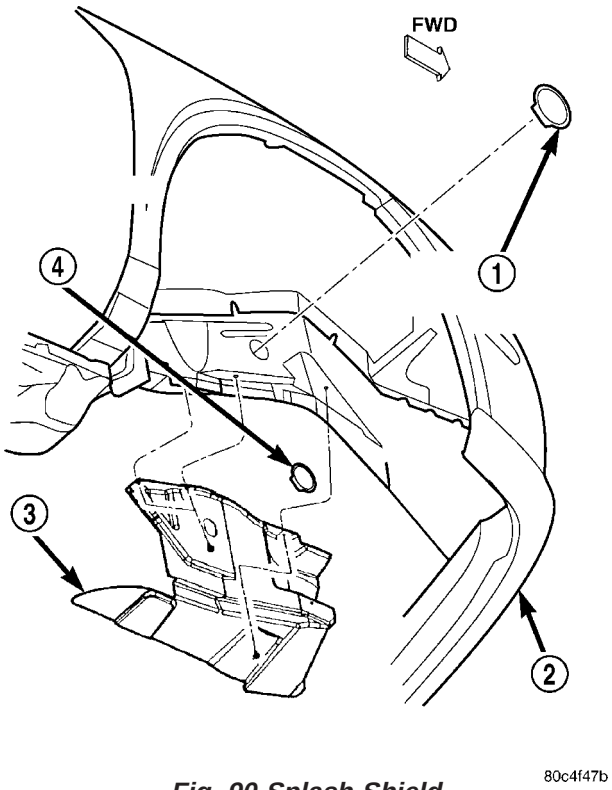

Fig. 90 Splash Shield

1 - RIGHT MOUNT BOLT ACCESS PLUG
2 - FASCIA
3 - SPLASH SHIELD
4 - CRANKSHAFT BOLT ACCESS PLUG

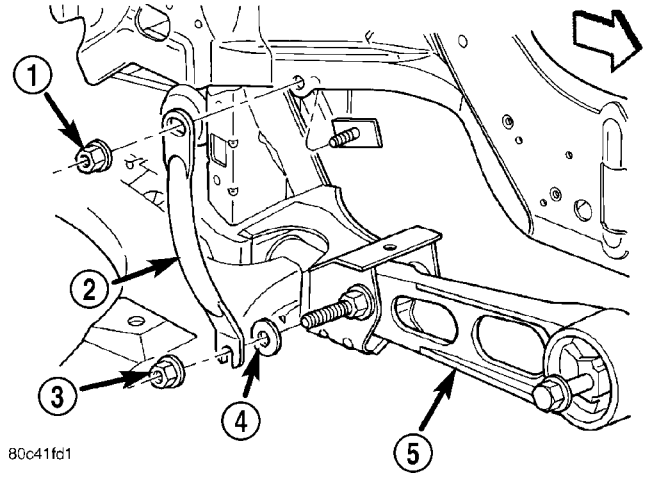

Fig. 91 Pencil Strut

1 - NUT
2 - PENCIL STRUT
3 - NUT
4 - FLAT WASHER
5 - LOWER TORQUE STRUT

(4) Remove bolts attaching lower torque strut to crossmember and strut bracket (Fig. 89).

(5) Remove lower torque strut.

INSTALLATION

INSTALLATION - UPPER

(1) Position the upper torque strut into mounting location (Fig. 89).

(2) Move torque strut aside (towards right fender) and install timing belt front upper cover (if A/C equipped).

(3) Install the torque strut mounting bolts and perform the torque strut adjustment procedure (Refer to 9 - ENGINE/ENGINE MOUNTING/TORQUE STRUT - ADJUSTMENTS).

INSTALLATION - LOWER

(1) Position lower torque strut into mounting locations.

(2) Install mounting bolts and perform torque strut adjustment procedure (Refer to 9 - ENGINE/ENGINE MOUNTING/TORQUE STRUT - ADJUSTMENTS).

(3) Install pencil strut and tighten nuts to 58 N·m (43 ft. lbs.) (Fig. 91).

(4) Install accessory belt splash shield (Fig. 90) and lower vehicle.

ADJUSTMENTS

ENGINE TORQUE STRUT ADJUSTMENT

The upper and lower torque struts need to be adjusted together to assure proper engine positioning and engine mount loading. Whenever a torque strut bolt(s) is loosened, this procedure must be performed.

(1) Remove accessory drive belt splash shield (Fig. 90).

(2) Remove pencil strut (Fig. 91).

(3) Loosen the upper and lower torque strut attaching bolt at the suspension crossmember and shock tower bracket (Fig. 89).

(4) The engine position may now be adjusted by positioning a suitable floor jack on the forward edge of the transmission bell housing (Fig. 92).

NOTE: The floor jack must be positioned as shown in (Fig. 92) to prevent minimal upward lifting of the engine.

(5) With the engine supported, remove the upper and lower torque strut attachment bolt(s) at shock tower bracket and suspension crossmember (Fig. 89). Verify that the torque struts are free to move within

TORQUE STRUT (Continued)

the shock tower bracket and crossmember. Reinstall the torque strut bolt(s), but do not tighten.

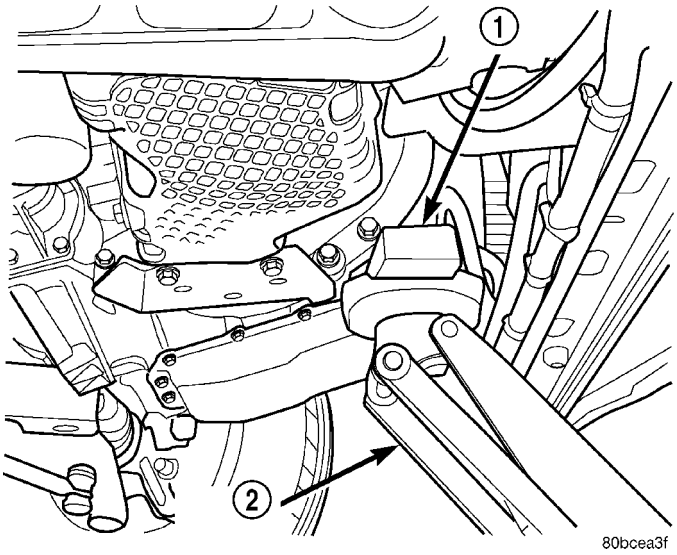

Fig. 92 Floor Jack Positioning

1 - WOOD BLOCK
2 - FLOOR JACK

(6) Carefully apply upward force, allowing the upper engine to rotate rearward until the distance between the center of the rearmost attaching bolt on the engine mount bracket (point “A”) and the center of the hole on the shock tower bracket (point “B”) is 119 mm (4.70 in.) (Fig. 93).

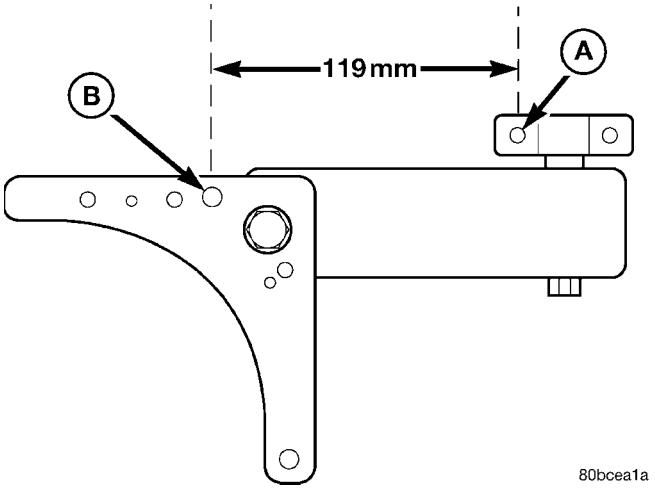

Fig. 93 Engine Position Measurement

CAUTION: The engine must be held in position with jack until both the upper and lower torque strut bolts are tightened.

(7) With the engine held at the proper position, tighten both the upper and lower torque strut bolts to 115 N·m (85 ft. lbs.) (Fig. 89).

(8) Remove the floor jack.

(9) Install pencil strut and tighten nuts to 58 N·m (43 ft. lbs.) (Fig. 91).

(10) Install accessory drive belt splash shield (Fig. 90).

LUBRICATION

DESCRIPTION

The lubrication system is a full-flow filtration, pressure feed type. The oil pump (Fig. 94) is mounted in the front engine cover and driven by the crankshaft.

OPERATION

Refer to (Fig. 95) for lubrication system flow.

Engine oil drawn from the oil pan sump through the pickup tube is pressurized by the pump and routed through the full-flow filter to the main oil gallery running the length of the cylinder block. A diagonal hole in each bulkhead feeds oil to each main bearing. Drilled passages within the crankshaft route oil from main bearing journals to connecting rod journals. A vertical hole at the number five bulkhead routes pressurized oil through a restrictor and up past a cylinder head bolt to an oil gallery running the length of the cylinder head. The restrictor, an integral part of the cylinder head gasket, provides increased oil flow to the main oil gallery. The camshaft journals are partially slotted to allow a predetermined amount of pressurized oil to pass into the bearing cap cavities with small holes directed to spray lubricate the camshaft lobes. Oil returning to the pan from pressurized components supplies lubrication to the valve stems. Cylinder bores and wrist pins are splash lubricated from directed slots on the connecting rod thrust collars.

DIAGNOSIS AND TESTING - CHECKING ENGINE OIL PRESSURE

Check oil pressure using a gauge at oil pressure switch location.

(1) Remove oil pressure switch.

(2) Install oil pressure test gauge assembly C-3292 with adaptor 8406. For Special Tool identification, (Refer to 9 - ENGINE - SPECIAL TOOLS).

CAUTION: If oil pressure is 0 at idle, Do Not Run engine at 3000 RPM.

(3) Warm engine to normal operating temperature.

LUBRICATION (Continued)

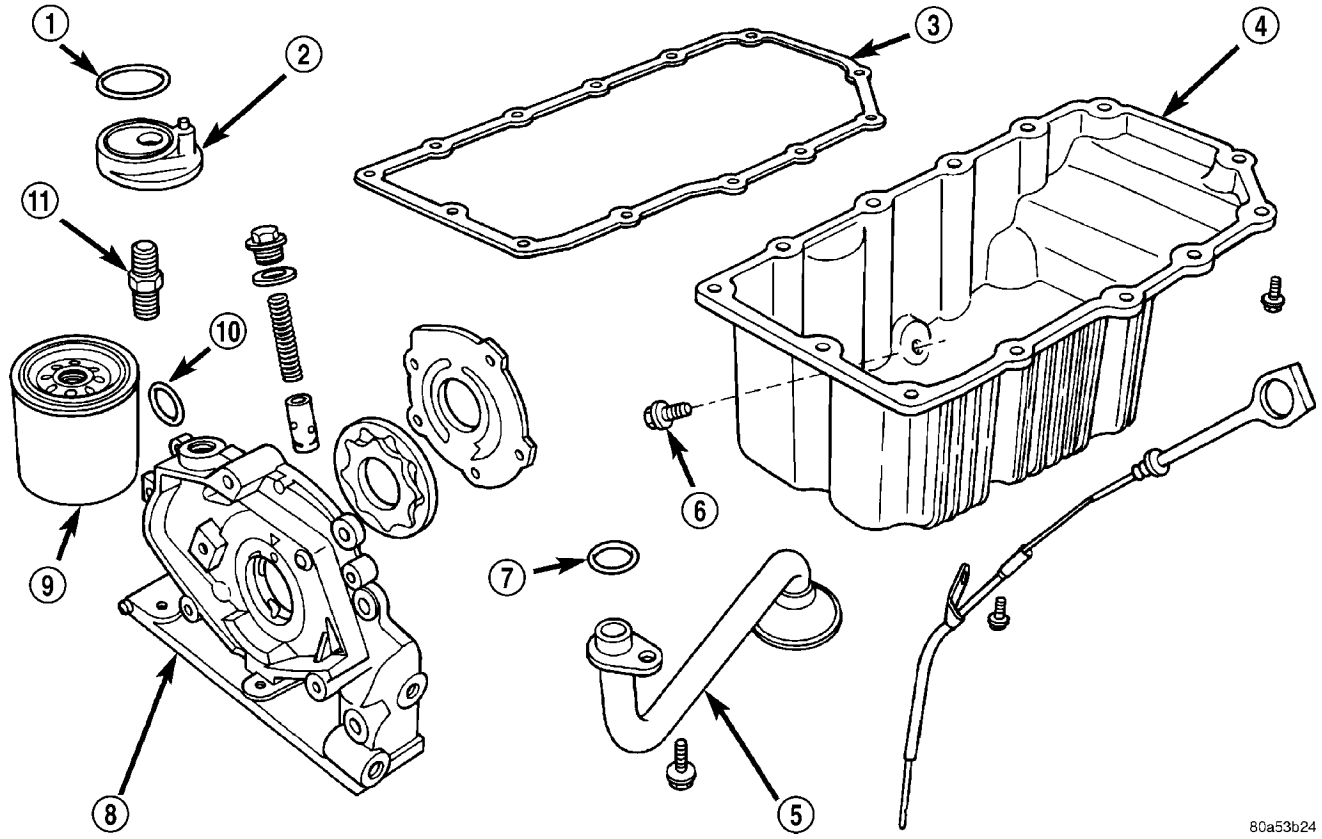

Fig. 94 Engine Lubrication Components

1 - O-RING
2 - OIL FILTER ADAPTER
3 - OIL PAN GASKET
4 - OIL PAN
5 - OIL PICK-UP TUBE
6 - DRAIN PLUG
7 - O-RING
8 - OIL PUMP BODY
9 - FILTER
10 - O-RING
11 - NIPPLE

(4) Monitor gauge readings at idle and 3000 rpm. Oil Pressure: **Idle** 25 kPa (4 psi) minimum, **3000 RPM** 170-550 kPa (25-80 psi).

(5) If oil pressure is 0 at idle, shut off engine and check the following:

- Pressure relief valve stuck open
- Clogged oil pick-up screen
- Damaged oil pick-up tube O-ring

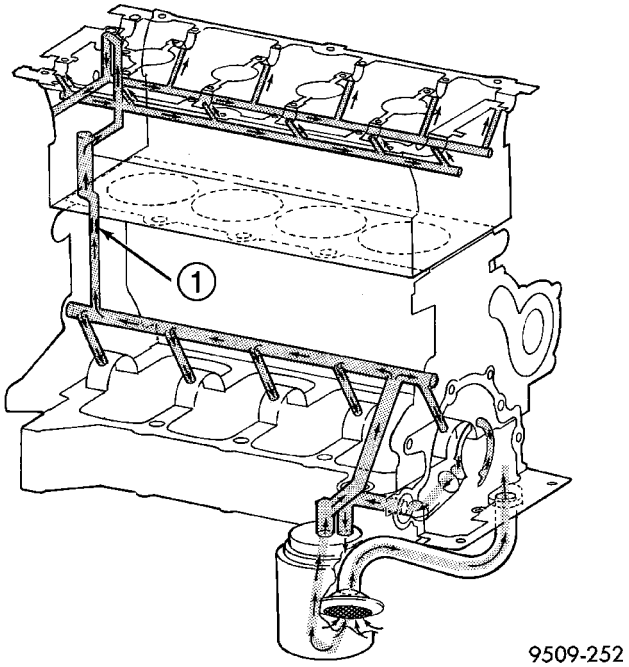

Fig. 95 Engine Lubrication System

1 - RESTRICTOR

OIL

STANDARD PROCEDURE

ENGINE OIL LEVEL CHECK

The best time to check engine oil level is after the vehicle has sat overnight, or if the engine has been running, allow the engine to be shut off for at least 5 minutes before checking oil level.

Checking the oil while the vehicle is on level ground will improve the accuracy of the oil level reading. Remove dipstick (Fig. 96), and observe oil level. Add oil only when the level is at or below the MIN mark (Fig. 97).

CAUTION: Do not operate engine if the oil level is above the MAX mark on the dipstick. Excessive oil volume can cause oil aeration which can lead to engine failure due to loss of oil pressure or increase in oil temperature.

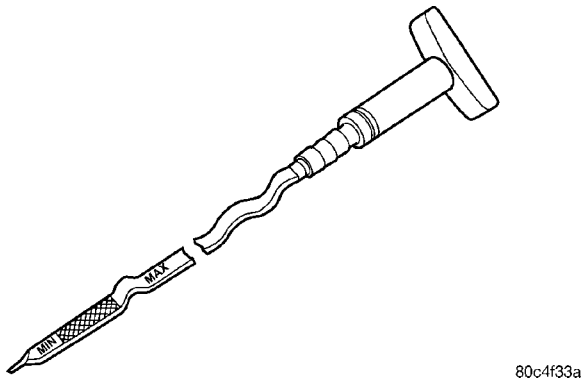

Fig. 97 Engine Oil

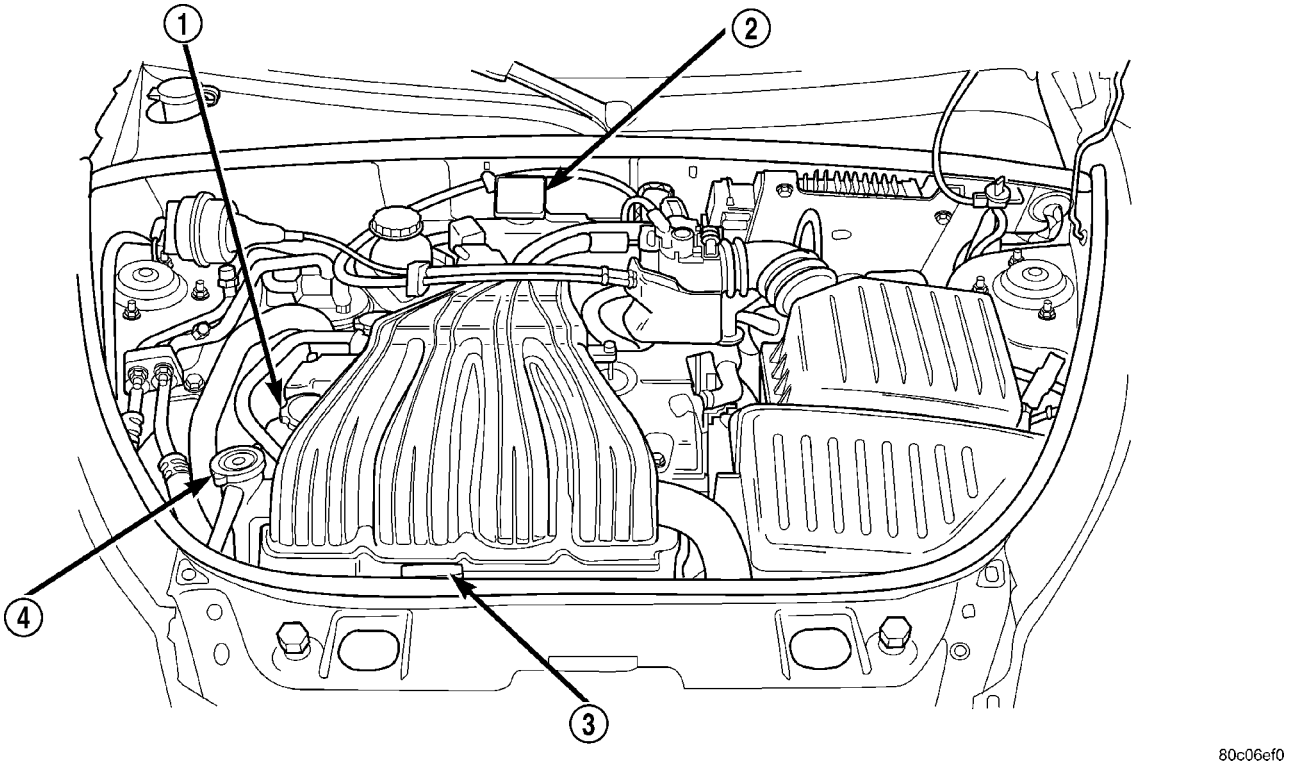

Fig. 96 Engine Oil Dipstick and Fill Locations

1 - ENGINE OIL FILL
2 - COOLANT RECOVERY CONTAINER
3 - ENGINE OIL DIPSTICK
4 - COOLANT PRESSURE CAP

OIL (Continued)

STANDARD PROCEDURE - ENGINE OIL AND FILTER CHANGE

WARNING: NEW OR USED ENGINE OIL CAN BE IRRITATING TO THE SKIN. AVOID PROLONGED OR REPEATED SKIN CONTACT WITH ENGINE OIL. CONTAMINANTS IN USED ENGINE OIL, CAUSED BY INTERNAL COMBUSTION, CAN BE HAZARDOUS TO YOUR HEALTH. THOROUGHLY WASH EXPOSED SKIN WITH SOAP AND WATER. DO NOT WASH SKIN WITH GASOLINE, DIESEL FUEL, THINNER, OR SOLVENTS, HEALTH PROBLEMS CAN RESULT. DO NOT POLLUTE, DISPOSE OF USED ENGINE OIL PROPERLY. CONTACT YOUR DEALER OR GOVERNMENT AGENCY FOR LOCATION OF COLLECTION CENTER IN YOUR AREA.

Change engine oil at mileage and time intervals described in the Maintenance Schedule (Refer to LUBRICATION & MAINTENANCE/MAINTENANCE SCHEDULES - DESCRIPTION).

(1) Run engine until achieving normal operating temperature.

(2) Position the vehicle on a level surface and turn engine off.

(3) Remove oil fill cap (Fig. 96).

(4) Raise vehicle on hoist.

(5) Place a suitable oil collecting container under oil pan drain plug.

(6) Remove drain plug from crankcase and allow oil to drain into collecting container (Fig. 98). Inspect drain plug threads for stretching or other damage. Replace drain plug and gasket if damaged.

(7) Remove oil filter (Refer to 9 - ENGINE/LUBRICATION/OIL FILTER - REMOVAL).

(8) Install oil pan drain plug. Torque drain plug to 28 N·m (20 ft. lbs.).

(9) Install new oil filter (Refer to 9 - ENGINE/LUBRICATION/OIL FILTER - INSTALLATION).

(10) Lower vehicle and fill crankcase with specified type and amount of engine oil (Refer to LUBRICATION & MAINTENANCE/SPECIFICATIONS - FLUID CAPACITIES) and (Refer to LUBRICATION & MAINTENANCE/FLUID TYPES - DESCRIPTION).

(11) Install oil fill cap (Fig. 96).

(12) Start engine and inspect for leaks.

(13) Stop engine and inspect oil level.

OIL FILTER SPECIFICATION

All engines are equipped with a high quality full-flow, disposable type oil filter. Replace oil filter with a Mopar® or the equivalent.

USED ENGINE OIL DISPOSAL

Care should be exercised when disposing used engine oil after it has been drained from a vehicle engine. Refer to the WARNING listed above.

OIL FILTER

REMOVAL

CAUTION: When servicing the oil filter (Fig. 98), avoid deforming the filter. Use an appropriate oil filter removing tool. Position filter wrench strap close the seam at the base of the filter. The oil filter seam that joins the can to the base, is reinforced by the base plate.

(1) Turn filter counterclockwise to remove (Fig. 98).

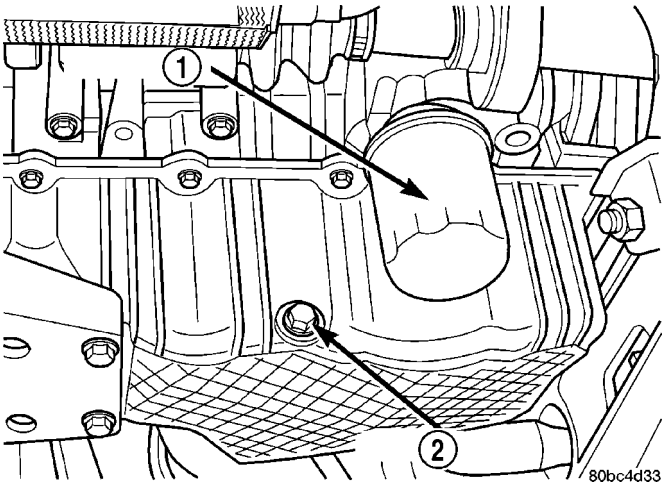

Fig. 98 Engine Oil Filter

1 - OIL FILTER
2 - DRAIN PLUG

INSTALLATION

(1) Clean and check the filter mounting surface. The surface must be smooth, flat and free of debris or old pieces of rubber.

(2) Lubricate new filter gasket.

(3) Screw filter on until gasket contacts base (Fig. 98). Tighten to 20 N·m (15 ft. lbs.).

OIL FILTER ADAPTER

REMOVAL

(1) Remove the oil filter (Refer to 9 - ENGINE/LUBRICATION/OIL FILTER - REMOVAL).

(2) Remove assembly by unscrewing adaptor fitting (Fig. 99).

(3) Remove O-ring seal.

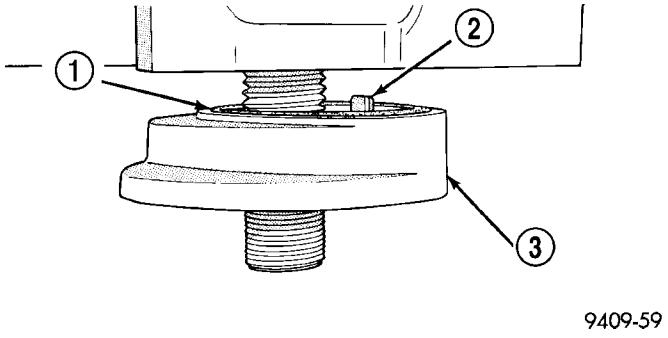

Fig. 99 Engine Oil Filter Adapter to Engine Block

1 - O-RING
2 - LOCATING ROLL PIN
3 - OIL FILTER ADAPTER

INSTALLATION

(1) Position O-ring in the groove on adapter.

(2) Align roll pin into engine block and tighten assembly to 80 N·m (60 ft. lbs.) (Fig. 99).

(3) Install oil filter (Refer to 9 - ENGINE/LUBRICATION/OIL FILTER - INSTALLATION).

OIL PAN

REMOVAL

(1) Disconnect negative cable from battery.

(2) Raise vehicle on hoist.

(3) Drain engine oil and remove oil filter.

(4) Remove oil filter adaptor from engine block (Fig. 99) (Refer to 9 - ENGINE/LUBRICATION/OIL FILTER ADAPTER - REMOVAL).

(5) Remove structural collar (Fig. 100).

(6) Remove lateral bending brace.

(7) Remove transaxle dust cover.

(8) Remove oil pan bolts.

(9) Remove oil pan.

INSTALLATION

(1) Clean oil pan and all sealing surfaces.

(2) Apply Mopar® Silicone Rubber Adhesive Sealant at the oil pump to engine block parting line (Fig. 101).

(3) Position a new oil pan gasket onto pan.

(4) Install oil pan and tighten screws to 12 N·m (105 in. lbs.).

(5) Install transaxle dust cover.

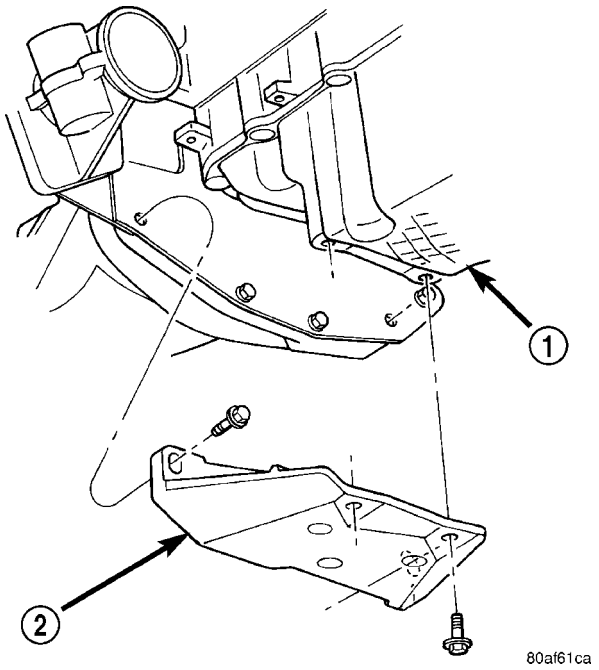

Fig. 100 Structural Collar

1 - OIL PAN
2 - STRUCTURAL COLLAR

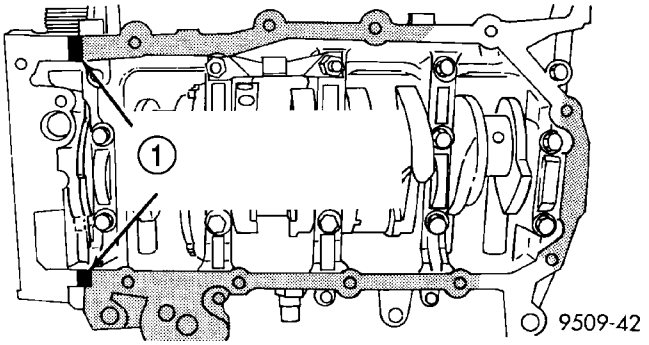

Fig. 101 Oil Pan Sealing

1 - PLACE A 1/8 INCH BEAD OF SEALER AT THE PARTING LINE OF THE OIL PUMP TO ENGINE BLOCK

(6) Install lateral bending brace.

(7) Install structural collar (Fig. 100) (Refer to 9 - ENGINE/ENGINE BLOCK/STRUCTURAL COVER - INSTALLATION).

(8) Install oil filter adaptor (Fig. 99)(Refer to 9 - ENGINE/LUBRICATION/OIL FILTER ADAPTER - INSTALLATION).

(9) Install oil filter (Refer to 9 - ENGINE/LUBRICATION/OIL FILTER - INSTALLATION).

(10) Lower vehicle and fill engine crankcase with proper oil to correct level.

OIL PRESSURE SENSOR/ SWITCH

REMOVAL

(1) Raise vehicle.

(2) Position oil collecting container under pressure switch location.

(3) Disconnect oil pressure switch electrical connector and remove switch (Fig. 102).

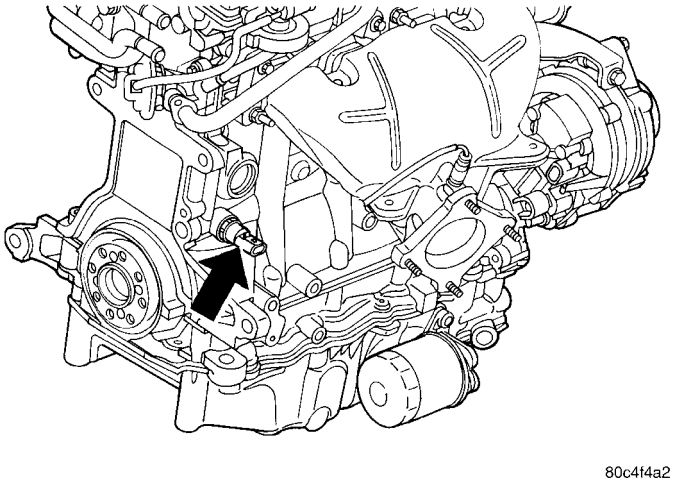

Fig. 102 Engine Oil Pressure Switch

INSTALLATION

(1) Install oil pressure switch and connect electrical connector (Fig. 102) .

(2) Lower vehicle.

(3) Start engine and allow to run a minimum of 2 minutes.

(4) Shut engine off and check engine oil level. Adjust level as necessary.

OIL PUMP

REMOVAL

(1) Disconnect negative cable from battery.

(2) Remove crankshaft vibration damper (Refer to 9 - ENGINE/ENGINE BLOCK/VIBRATION DAMPER - REMOVAL).

(3) Remove the front timing belt cover (Refer to 9 - ENGINE/VALVE TIMING/TIMING BELT COVER(S) - REMOVAL).

(4) Remove the timing belt (Refer to 9 - ENGINE/ VALVE TIMING/TIMING BELT AND SPROCKETS - REMOVAL).

(5) Remove the timing belt tensioner pulley bracket (Refer to 9 - ENGINE/VALVE TIMING/TIMING BELT TENSIONER & PULLEY - REMOVAL).

(6) Remove the camshaft sprockets and the rear timing belt cover (Refer to 9 - ENGINE/VALVE TIMING/TIMING BELT COVER(S) - REMOVAL).

(7) Drain engine oil. Remove the oil pan (Refer to 9 - ENGINE/LUBRICATION/OIL PAN - REMOVAL).

(8) Remove crankshaft sprocket using Special Tool 6793 and insert C-4685-C2 (Fig. 103).

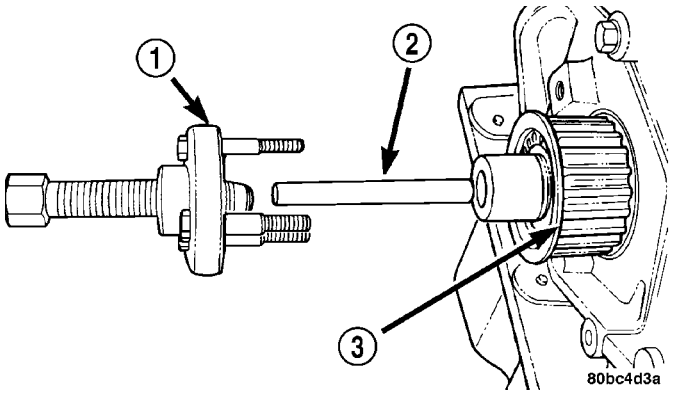

Fig. 103 Crankshaft Sprocket—Removal

1 - SPECIAL TOOL 6793
2 - SPECIAL TOOL C-4685–C2
3 - CRANKSHAFT SPROCKET

(9) Remove the oil pick-up tube.

(10) Remove the oil pump (Fig. 104) and front crankshaft seal.

OIL PUMP (Continued)

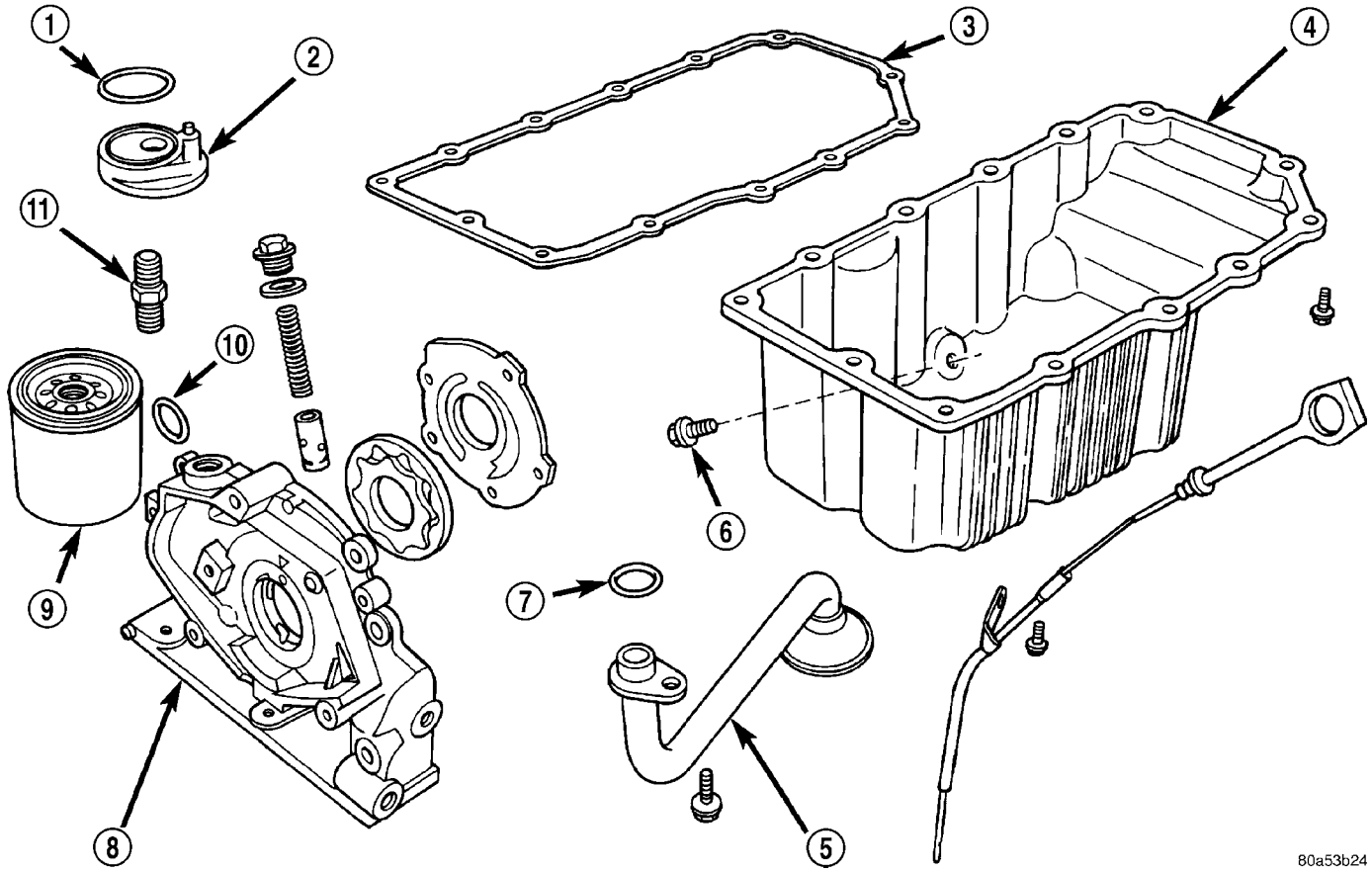

Fig. 104 Oil Pump and Tube

1 - O-RING
2 - OIL FILTER ADAPTER
3 - OIL PAN GASKET
4 - OIL PAN
5 - OIL PICK-UP TUBE
6 - DRAIN PLUG
7 - O-RING
8 - OIL PUMP BODY
9 - FILTER
10 - O-RING
11 - NIPPLE

DISASSEMBLY

(1) To remove the relief valve, proceed as follows:

(2) Remove the threaded plug and gasket from the oil pump (Fig. 105).

CAUTION: Oil pump pressure relief valve must be installed as shown in (Fig. 105) or serious damage may occur.

(3) Remove spring and relief valve (Fig. 105).

(4) Remove oil pump cover screws, and lift off cover.

(5) Remove pump rotors.

(6) Wash all parts in a suitable solvent and inspect carefully for damage or wear (Fig. 106).

INSPECTION

(1) Clean all parts thoroughly. Mating surface of the oil pump should be smooth. Replace pump cover if scratched or grooved.

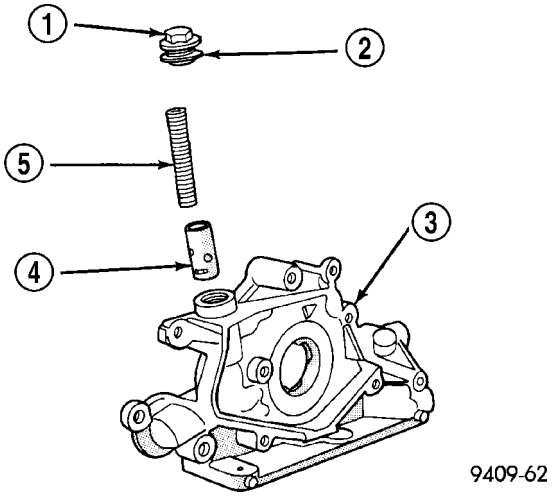

Fig. 105 Oil Pressure

1 - RETAINER CAP
2 - GASKET
3 - OIL PUMP BODY
4 - RELIEF VALVE
5 - SPRING

OIL PUMP (Continued)

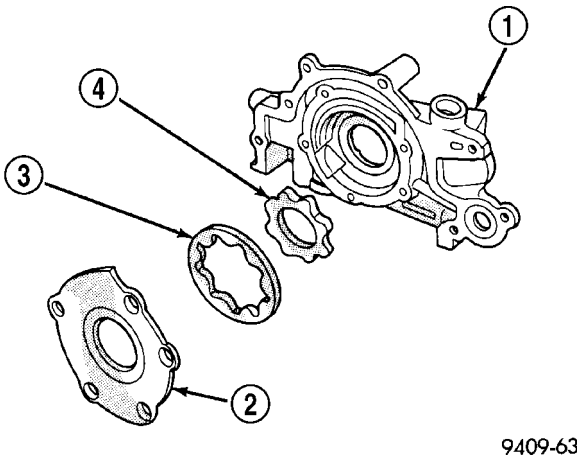

Fig. 106 Oil Pump

1 - OIL PUMP BODY
2 - OIL PUMP COVER
3 - OUTER ROTOR
4 - INNER ROTOR

(2) Lay a straightedge across the pump cover surface (Fig. 107). If a 0.076 mm (0.003 in.) feeler gauge can be inserted between cover and straight edge, cover should be replaced.

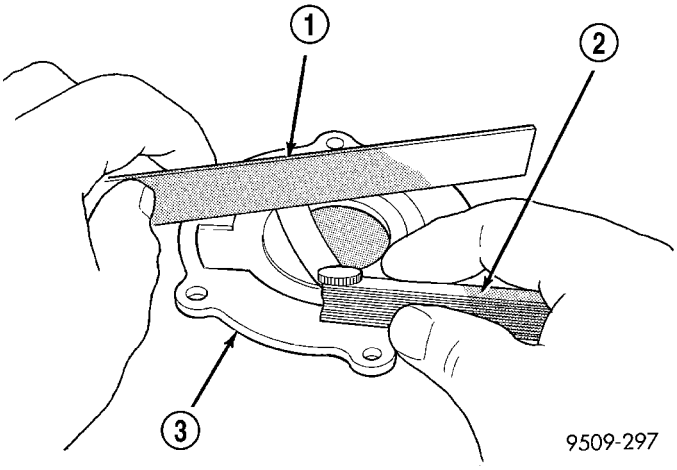

Fig. 107 Checking Oil Pump Cover Flatness

1 - STRAIGHT EDGE
2 - FEELER GAUGE
3 - OIL PUMP COVER

(3) Measure thickness and diameter of outer rotor. If outer rotor thickness measures 7.64 mm (0.301 in.) or less (Fig. 108), or if the diameter is 79.95 mm (3.148 in.) or less, replace outer rotor.

(4) If inner rotor measures 7.64 mm (0.301 in) or less replace inner rotor (Fig. 109).

(5) Slide outer rotor into pump housing, press to one side with fingers and measure clearance between rotor and housing (Fig. 110). If measurement is 0.39 mm (0.015 in.) or more, replace housing only if outer rotor is in specification.

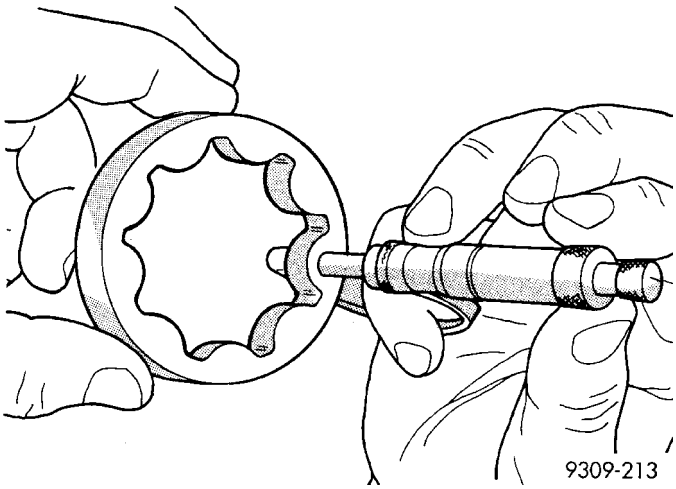

Fig. 108 Measuring Outer Rotor Thickness

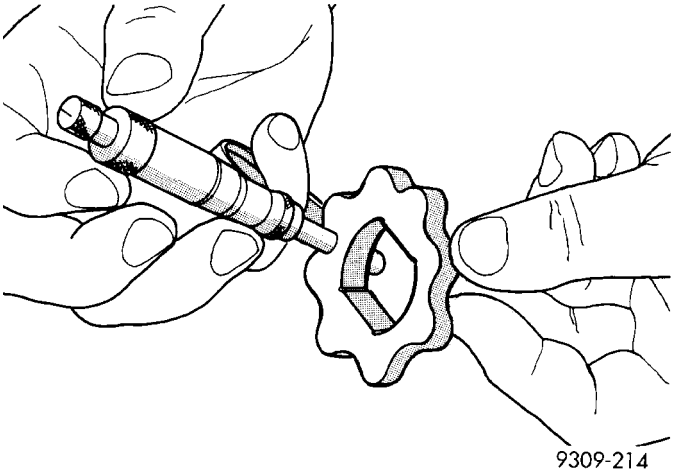

Fig. 109 Measuring Inner Rotor Thickness

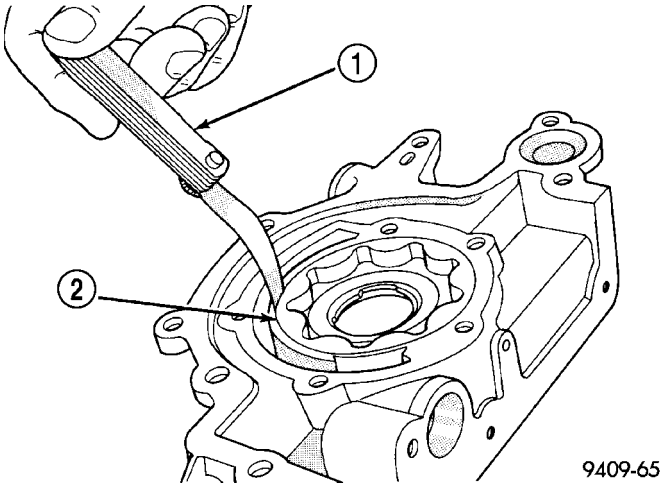

Fig. 110 Measuring Outer Rotor Clearance in Housing

1 - FEELER GAUGE
2 - OUTER ROTOR

(6) Install inner rotor into pump housing. If clearance between inner and outer rotors (Fig. 111) is 0.203 mm (0.008 in.) or more, replace both rotors.

OIL PUMP (Continued)

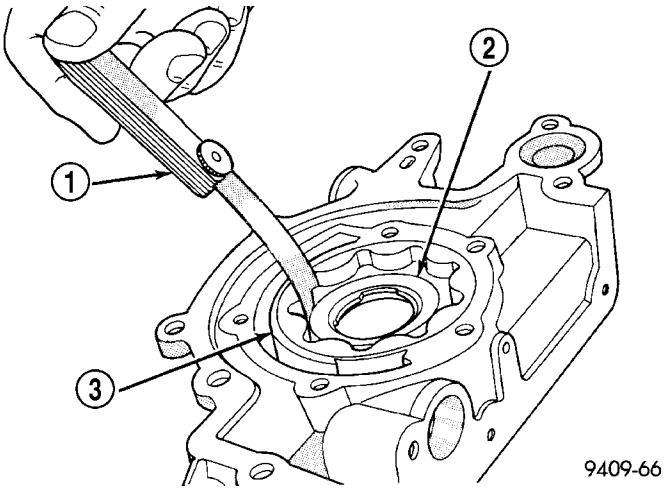

Fig. 111 Measuring Clearance Between Rotors

1 - FEELER GAUGE
2 - INNER ROTOR
3 - OUTER ROTOR

(7) Place a straightedge across the face of the pump housing, between bolt holes. If a feeler gauge of 0.102 mm (0.004 inch) or more can be inserted between rotors and the straightedge, replace pump assembly (Fig. 112). **ONLY** if rotors are in specs.

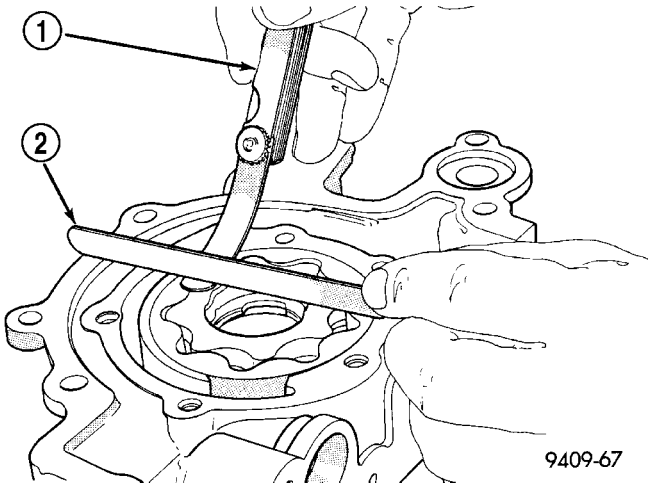

Fig. 112 Measuring Clearance Over Rotors

1 - FEELER GAUGE
2 - STRAIGHT EDGE

(8) Inspect oil pressure relief valve plunger for scoring and free operation in its bore. Small marks may be removed with 400-grit wet or dry sandpaper.

(9) The relief valve spring has a free length of approximately 60.7 mm (2.39 in.) it should test between 18 and 19 pounds when compressed to 40.5 mm (1.60 in.). Replace spring that fails to meet specifications.

(10) If oil pressure is low and pump is within specifications, inspect for worn engine bearings, damaged or missing oil pick-up tube O-ring, clogged oil pick-up tube screen, clogged oil filter and stuck open pressure relief valve or other reasons for oil pressure loss.

ASSEMBLY

(1) Install oil pump rotors (Fig. 106).

(2) Install oil pump cover and screws (Fig. 106). Tighten screws to 12 N·m (105 in. lbs.).

CAUTION: Oil pump pressure relief valve must be installed as shown in (Fig. 105) or serious damage may occur.

(3) Install spring and relief valve (Fig. 105).

(4) Install threaded plug and gasket to the oil pump (Fig. 105). Tighten plug to 41 N·m (30 ft. lbs.).

INSTALLATION

(1) Make sure all surfaces are clean and free of oil and dirt.

(2) Apply Mopar® Gasket Maker to oil pump as shown in (Fig. 113). Install oil ring into oil pump body discharge passage.

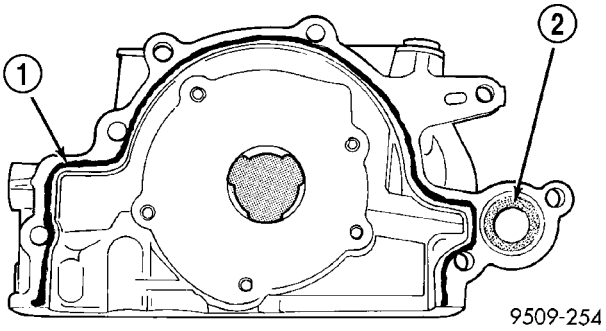

Fig. 113 Oil Pump Sealing

1 - APPLY GASKET MAKER TO OIL PUMP BODY FLANGE
2 - O-RING

(3) Prime oil pump before installation.

(4) Align oil pump rotor flats with flats on crankshaft as you install the oil pump to the block.

NOTE: Front crankshaft seal MUST be out of pump to align, or damage may result.

(5) Torque all oil pump attaching bolts to 28 N·m (250 in. lbs.).

(6) Install new front crankshaft seal using Special Tool 6780 (Fig. 114).

(7) Install crankshaft sprocket, using Special Tool 6792 (Fig. 115).

(8) Install oil pick-up tube and oil pan (Refer to 9 - ENGINE/LUBRICATION/OIL PAN - INSTALLATION).

(9) Install timing belt rear cover and camshaft sprockets (Refer to 9 - ENGINE/VALVE TIMING/TIMING BELT COVER(S) - INSTALLATION).

OIL PUMP (Continued)

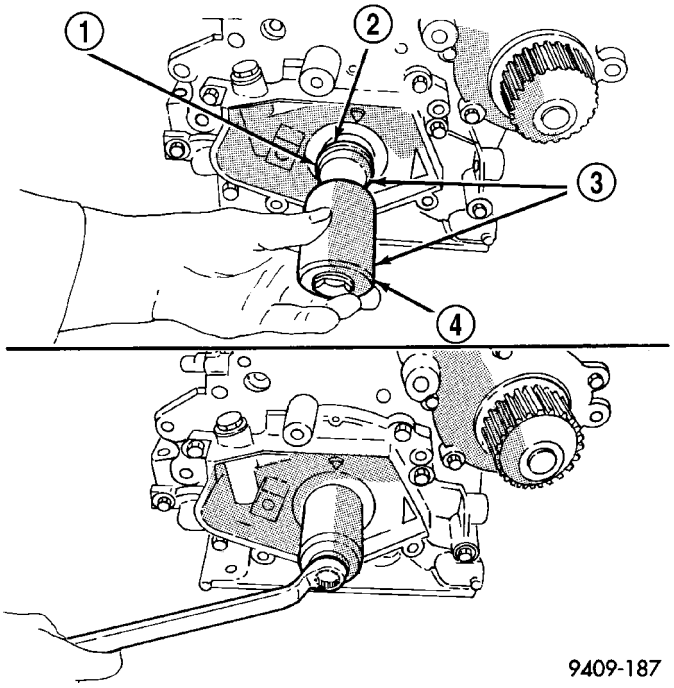

Fig. 114 Front Crankshaft Seal—Installation

1 - PROTECTOR
2 - SEAL
3 - SPECIAL TOOL 6780–1
4 - INSTALLER

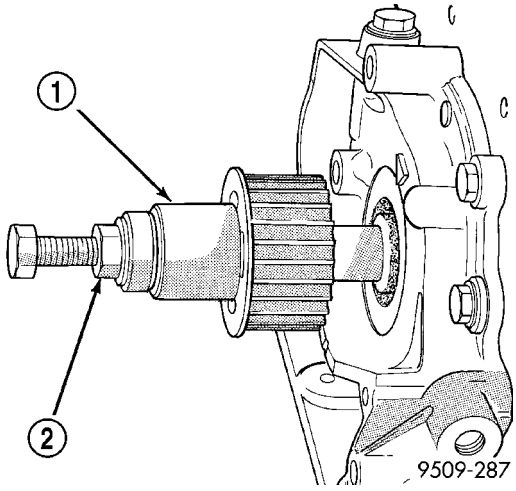

Fig. 115 Crankshaft Sprocket—Installation

1 - SPECIAL TOOL 6792
2 - TIGHTEN NUT TO INSTALL

(10) Install the timing belt tensioner pulley bracket (Refer to 9 - ENGINE/VALVE TIMING/TMNG BELT/CHAIN TENSIONER&PULLEY - INSTALLATION).

(11) Install the timing belt (Refer to 9 - ENGINE/VALVE TIMING/TIMING BELT AND SPROCKETS - INSTALLATION).

(12) Install the front timing belt cover (Refer to 9 - ENGINE/VALVE TIMING/TIMING BELT COVER(S) - INSTALLATION).

(13) Install crankshaft vibration damper (Refer to 9 - ENGINE/ENGINE BLOCK/VIBRATION DAMPER - INSTALLATION).

(14) Fill engine crankcase with proper oil to correct level.

(15) Connect negative cable to battery.

INTAKE MANIFOLD

DIAGNOSIS AND TESTING - INTAKE MANIFOLD LEAKS

An intake manifold air leak is characterized by lower than normal manifold vacuum. Also, one or more cylinders may not be functioning.

WARNING: USE EXTREME CAUTION WHEN THE ENGINE IS OPERATING. DO NOT STAND IN A DIRECT LINE WITH THE FAN. DO NOT PUT YOUR HANDS NEAR THE PULLEYS, BELTS OR THE FAN. DO NOT WEAR LOOSE CLOTHING.

(1) Start the engine.

(2) Spray a small stream of water (Spray Bottle) at the suspected leak area.

(3) If engine RPM'S change, the area of the suspected leak has been found.

(4) Repair as required.

REMOVAL

REMOVAL - UPPER INTAKE MANIFOLD

(1) Disconnect inlet air temperature sensor and make-up air hose from clean air hose (Fig. 116).

(2) Remove air cleaner housing and clean air hose assembly.

(3) Disconnect negative cable from battery.

(4) Remove engine cover by pulling upward to release from ball stud retainers (Fig. 117).

(5) Remove throttle and speed control cables from throttle lever and bracket.

INTAKE MANIFOLD (Continued)

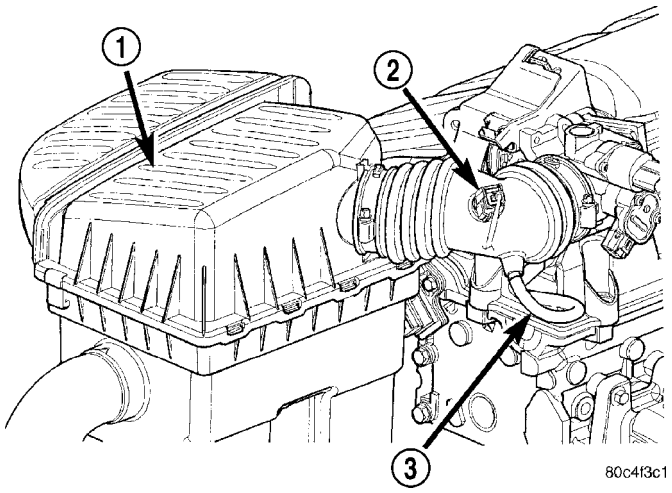

Fig. 116 Clean Air Hose

1 - AIR CLEANER HOUSING
2 - INLET AIR TEMPERATURE SENSOR
3 - MAKE-UP AIR HOSE

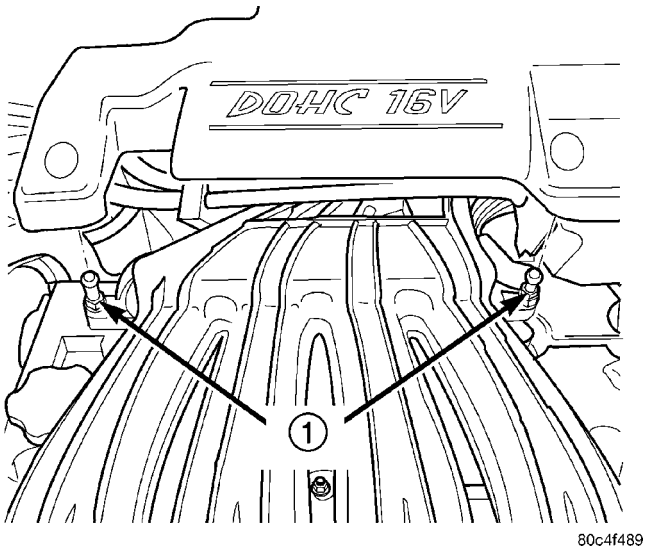

Fig. 117 Engine Cover

1 - BALL STUDS

(6) Disconnect manifold absolute pressure (MAP) sensor (Fig. 118), idle air control (IAC) motor and throttle position sensor (TPS) wiring connectors (Fig. 119).

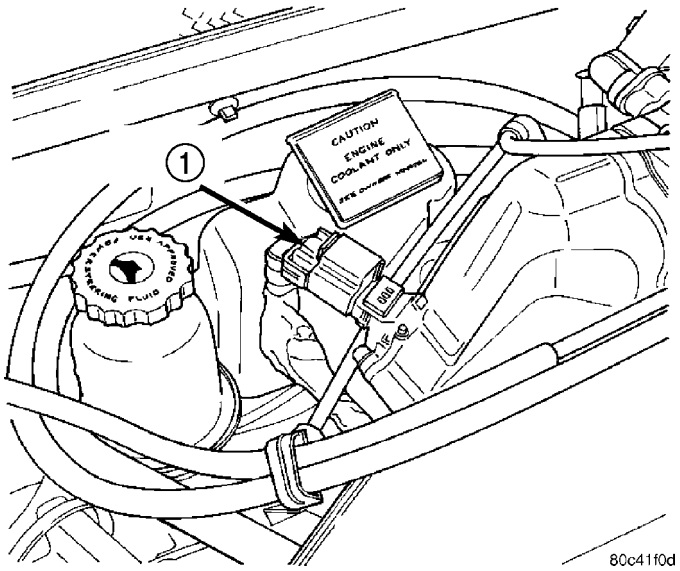

Fig. 118 MAP Sensor

1 - MAP SENSOR

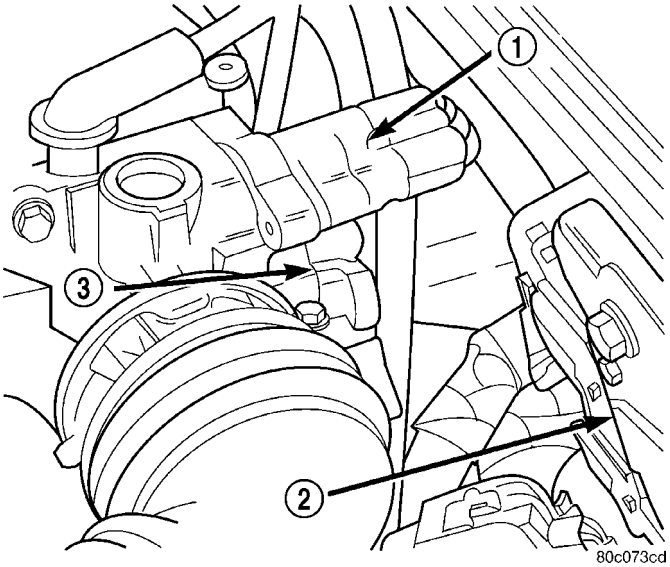

Fig. 119 Idle Air Control (IAC) Motor and Throttle Position Sensor (TPS) Wiring Connectors

1 - IAC
2 - PCM
3 - TPS

INTAKE MANIFOLD (Continued)

(7) Disconnect proportional purge hoses (Fig. 120).
(8) Disconnect brake booster hose (Fig. 121).

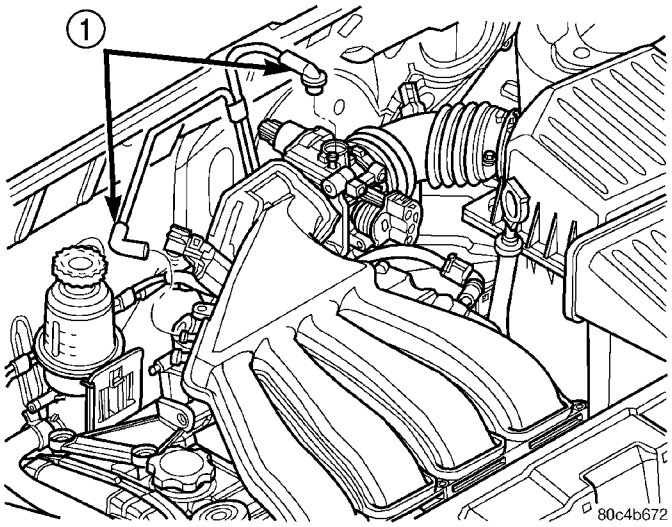

Fig. 120 Proportional Purge Hoses

1 - PROPORTIONAL PURGE HOSES

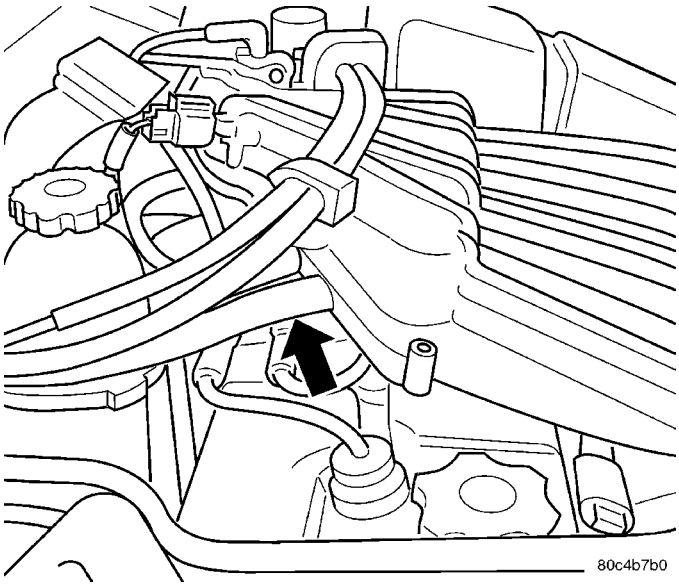

Fig. 121 Brake Booster Hose

(9) Disconnect PCV hose from intake manifold (Fig. 122).

(10) Remove throttle body support bracket bolt at the throttle body (Fig. 122).

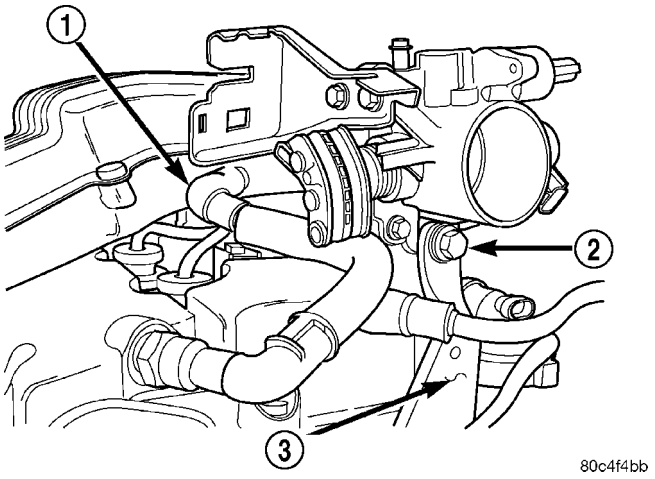

Fig. 122 Throttle Body Support Bracket and PCV Hose

1 - PCV HOSE
2 - BOLT
3 - SUPPORT BRACKET

(11) Remove upper intake manifold fasteners (Fig. 125).
(12) Remove upper intake manifold.
(13) If further service is required, cover the lower intake manifold openings to prevent foreign materials from entering the engine (Fig. 123).

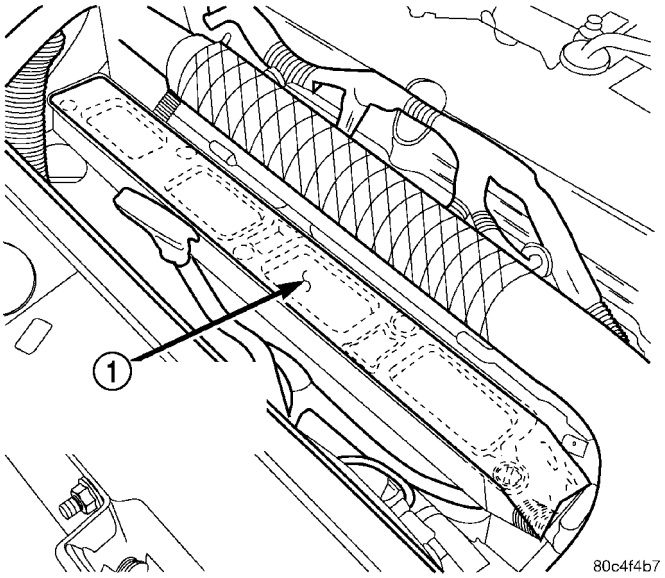

Fig. 123 Cover Lower Intake Manifold Openings

1 - INTAKE MANIFOLD MUST BE COVERED DURING SERVICE

INTAKE MANIFOLD (Continued)

REMOVAL - LOWER INTAKE MANIFOLD

WARNING: RELEASE FUEL SYSTEM PRESSURE BEFORE SERVICING SYSTEM COMPONENTS. SERVICE VEHICLES IN WELL VENTILATED AREAS AND AVOID IGNITION SOURCES. NEVER SMOKE WHILE SERVICING THE VEHICLE.

(1) Perform fuel system pressure release procedure **before attempting any repairs (Refer to 14 - FUEL SYSTEM/FUEL DELIVERY - STANDARD PROCEDURE).**

(2) Disconnect negative battery cable.

(3) Remove upper intake manifold (Refer to 9 - ENGINE/MANIFOLDS/INTAKE MANIFOLD UPPER - REMOVAL).

(4) Partially drain cooling system below thermostat level (Refer to 7 - COOLING/ENGINE - STANDARD PROCEDURE).

(5) Remove upper radiator hose.

(6) Remove coolant outlet connector and thermostat (Refer to 7 - COOLING/ENGINE/ENGINE COOLANT THERMOSTAT - REMOVAL).

(7) Disconnect the fuel supply line quick connect at the fuel rail assembly (Refer to 14 - FUEL SYSTEM/FUEL DELIVERY/QUICK CONNECT FITTING - STANDARD PROCEDURE).

WARNING: WRAP SHOP TOWELS AROUND HOSE TO CATCH ANY GASOLINE SPILLAGE.

(8) Disconnect fuel injector wiring harness.

(9) Remove screw attaching the oil dipstick tube to lower intake manifold (Fig. 124).

(10) Remove lower intake manifold fasteners (Fig. 127).

(11) Remove lower intake manifold.

CLEANING

(1) Discard gasket(s).

(2) Clean all sealing surfaces.

INSPECTION

(1) Inspect manifold for cracks or distortion. Replace manifold if necessary.

(2) Inspect manifold for gasket surface damage or warpage. Replace manifold if necessary.

INSTALLATION

INSTALLATION - UPPER INTAKE MANIFOLD

(1) Clean all sealing surfaces. Replace seals as necessary.

(2) Position new seals on manifold, if replaced.

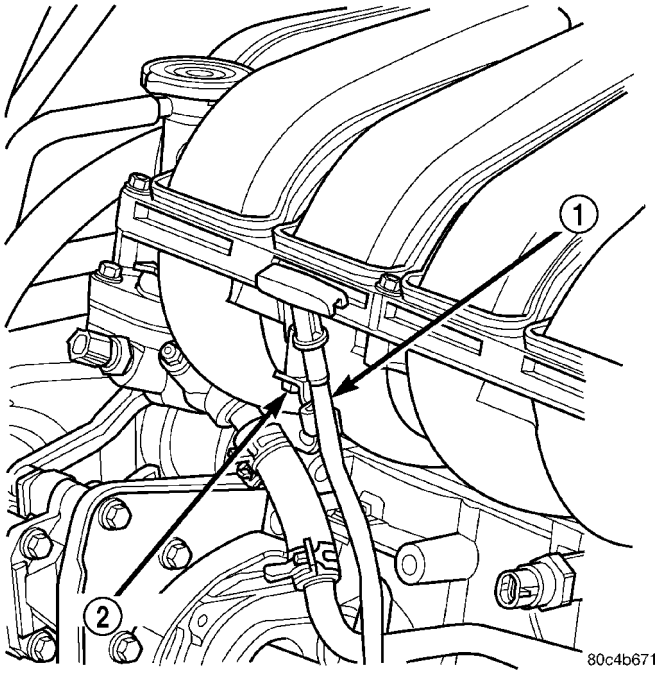

Fig. 124 Dipstick Tube

1 - DIPSTICK TUBE
2 - SCREW

(3) Position upper intake manifold on lower intake manifold. Tighten upper intake manifold fasteners to 12 N·m (105 in. lbs.) in sequence shown in (Fig. 125).

(4) Install throttle body support bracket bolt at throttle body (Fig. 122). Tighten bolt to 28 N·m (20 ft. lbs.).

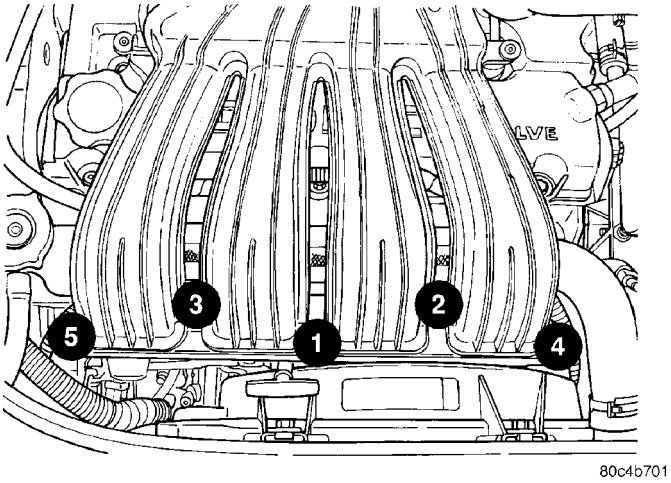

Fig. 125 Intake Manifold Tightening Sequence

(5) Connect PCV hose to intake manifold (Fig. 122).

(6) Connect manifold absolute pressure (MAP) electrical connector (Fig. 118).

(7) Connect proportional purge hoses (Fig. 120).

(8) Connect brake booster hose (Fig. 121).

INTAKE MANIFOLD (Continued)

(9) Connect Idle Air Control (IAC) motor and Throttle Position Sensor (TPS) wiring connectors (Fig. 118).

(10) Install throttle and speed control cables to bracket. Connect cables to the throttle lever.

(11) Connect negative cable to battery.

(12) Install air cleaner housing and clean air hose. Tighten clean air hose clamp to 1.7 N·m (15 in. lbs.).

(13) Connect make-up air hose and inlet air temperature sensor (Fig. 116).

(14) Install engine cover by positioning on ball studs and gently press down until seated (Fig. 117).

INSTALLATION - LOWER INTAKE MANIFOLD

(1) Clean all gasket surfaces.

(2) Position new seals on lower intake manifold, if replaced (Fig. 126).

(3) Install lower intake manifold. Tighten fasteners to 12 N·m (105 in. lbs.) in sequence shown in (Fig. 127).

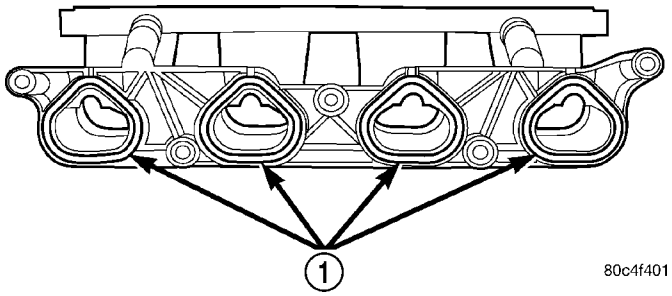

Fig. 126 Lower Intake Manifold Seals - Naturally Aspirated Engine

1 - SEALS

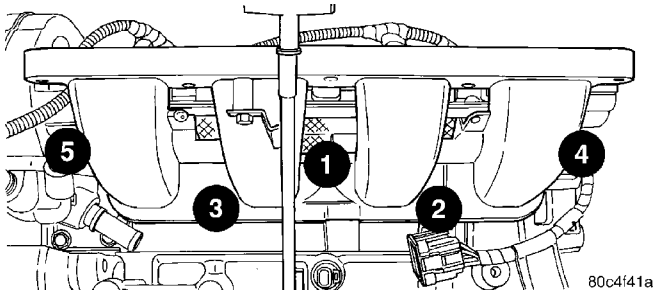

Fig. 127 Lower Intake Manifold Tightening Sequence

(4) If removed, install the fuel rail assembly to intake manifold. Tighten screws to 23 N·m (200 in. lbs.).

(5) Connect fuel injector wiring harness.

(6) Inspect quick connect fittings for damage, replace if necessary (Refer to 14 - FUEL SYSTEM/ FUEL DELIVERY/QUICK CONNECT FITTING - STANDARD PROCEDURE). Lubricate tube with clean engine oil. Connect fuel supply hose to fuel rail assembly. Check connection by pulling on connector to insure it locked into position.

(7) Install the screw attaching the oil dipstick tube to lower intake manifold (Fig. 124).

(8) Install coolant outlet connector and thermostat (Refer to 7 - COOLING/ENGINE/ENGINE COOLANT THERMOSTAT - INSTALLATION).

(9) Install radiator upper hose.

(10) Install upper intake manifold (Refer to 9 - ENGINE/MANIFOLDS/INTAKE MANIFOLD UPPER - INSTALLATION).

(11) Connect negative cable to battery.

(12) Fill the cooling system (Refer to 7 - COOLING/ENGINE - STANDARD PROCEDURE).

(13) With the DRBIII® scan tool use ASD Fuel System Test to pressurize system to check for leaks.

CAUTION: When using the ASD Fuel System Test, the Auto Shutdown (ASD) relay will remain energized for 7 minutes or until the ignition switch is turned to the OFF position, or Stop All Test is selected.

EXHAUST MANIFOLD

REMOVAL

(1) Remove clean air hose and air cleaner housing.
(2) Disconnect negative cable from battery.
(3) Disconnect throttle and speed control cables from the throttle lever and bracket.
(4) Disconnect MAP sensor electrical connector.
(5) Remove fasteners securing power steering fluid reservoir to cylinder head.
(6) Remove coolant recovery container (Refer to 7 - COOLING/ENGINE/COOLANT RECOVERY CONTAINER - REMOVAL).
(7) Remove bolts attaching upper heat shield (Fig. 128).
(8) Remove upper heat shield.

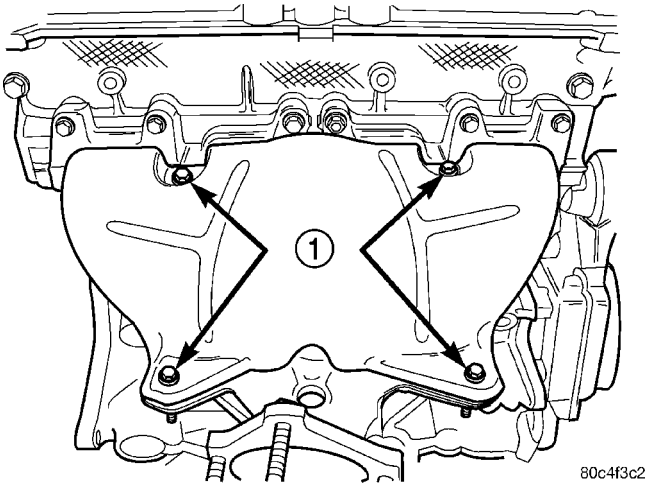

Fig. 128 Exhaust Manifold Heat Shield Bolts

1 - BOLTS

(9) Raise vehicle.
(10) Disconnect exhaust pipe from manifold (Fig. 129).
(11) Remove engine wiring heat shield (Fig. 130).
(12) Remove manifold support bracket (Fig. 131).
(13) Remove lower exhaust manifold heat shield (Fig. 132).
(14) Disconnect oxygen sensor electrical connector.
(15) Remove exhaust manifold lower retaining fasteners.
(16) Lower vehicle and remove the upper exhaust manifold retaining fasteners.
(17) Remove exhaust manifold (Fig. 133) from above/between the engine and cowl panel.
(18) Remove and discard manifold gasket.

CLEANING

(1) Discard gasket (if equipped) and clean all surfaces of manifold and cylinder head.

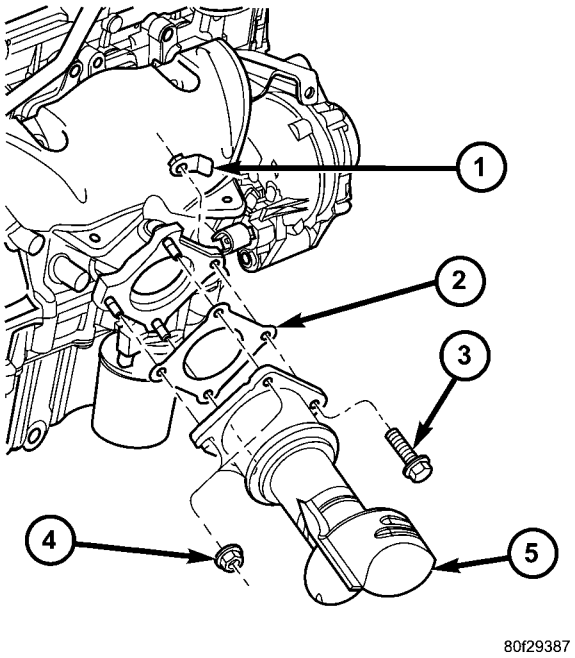

Fig. 129 Converter to Exhaust Manifold Connection - 2.0L

1 - FLAG NUT
2 - GASKET
3 - BOLT
4 - NUT
5 - CATALYTIC CONVERTER

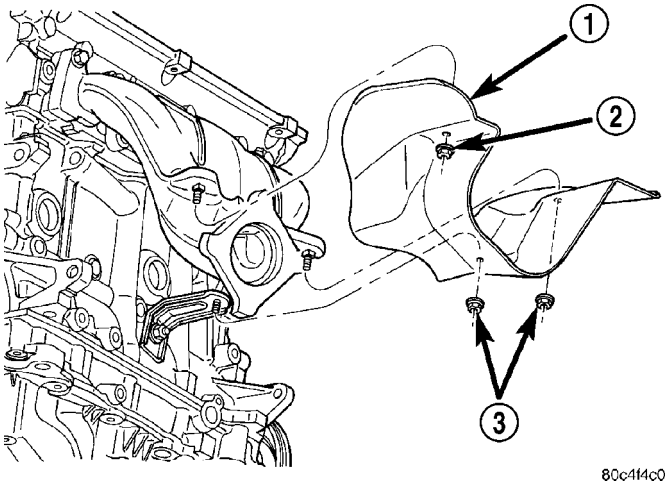

Fig. 130 Heat Shield—Engine Wiring

1 - HEAT SHIELD
2 - NUT
3 - NUT

INSPECTION

(1) Inspect manifold gasket surfaces for flatness with straight edge. Surface must be flat within 0.15 mm per 300 mm (0.006 in. per foot) of manifold length.
(2) Inspect manifolds for cracks or distortion. Replace manifold as necessary.

EXHAUST MANIFOLD (Continued)

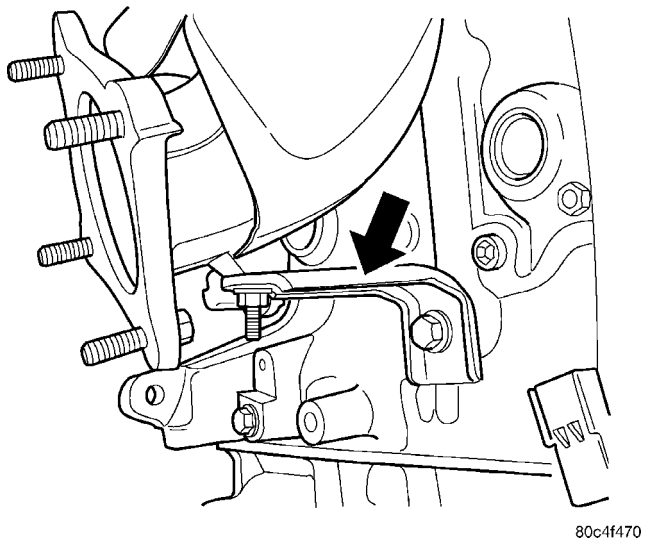

Fig. 131 Exhaust Manifold Support Bracket

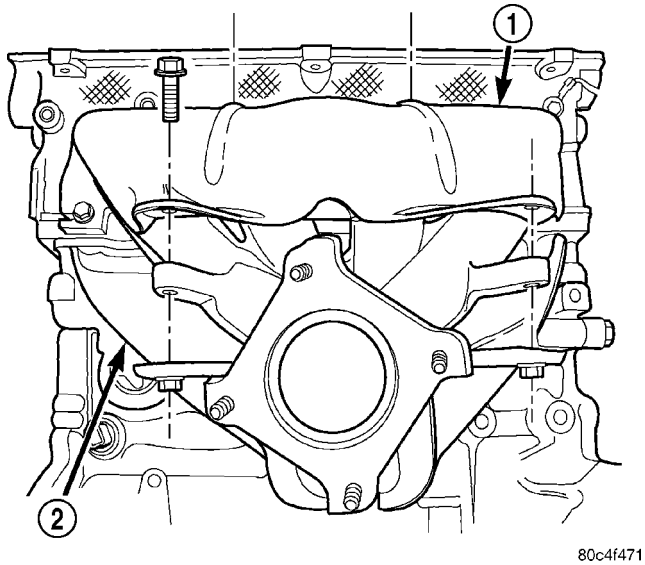

Fig. 132 Exhaust Manifold Heat Shields

1 - UPPER HEAT SHIELD
2 - LOWER HEAT SHIELD

INSTALLATION

(1) Install a new exhaust manifold gasket. **DO NOT APPLY SEALER**.

(2) Position exhaust manifold in place. Tighten fasteners, starting at center and progressing outward in both directions to 23 N·m (200 in. lbs.) (Fig. 133). Raise and lower vehicle for fastener access as necessary. Repeat tightening procedure until all fasteners are at specified torque.

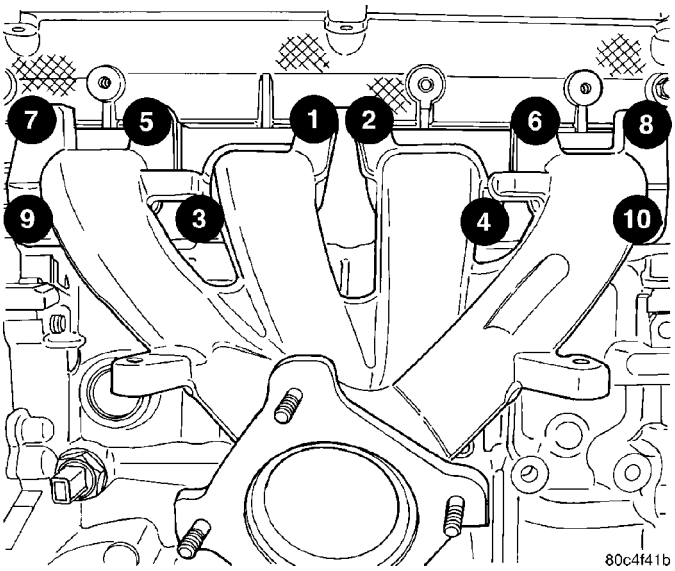

Fig. 133 Exhaust Manifold Tightening Sequence

(3) Install exhaust manifold heat shields (Fig. 132). Tighten bolts to 12 N·m (105 in. lbs.) (Fig. 128).

(4) Install exhaust manifold support bracket (Fig. 131).

(5) Install engine wiring heat shield (Fig. 130).

(6) Connect oxygen sensor electrical connector.

(7) Install exhaust pipe to manifold (Fig. 129). Tighten fasteners to 28 N·m (250 in. lbs.).

(8) Install coolant recovery container (Refer to 7 - COOLING/ENGINE/COOLANT RECOVERY CONTAINER - INSTALLATION).

(9) Install fasteners securing power steering fluid reservoir to cylinder head.

(10) Connect MAP sensor electrical connector.

(11) Connect throttle and speed control cables to the throttle lever and bracket.

(12) Connect negative cable to battery.

(13) Install clean air hose and air cleaner housing.

VALVE TIMING

STANDARD PROCEDURE - VALVE TIMING VERIFICATION

(1) Remove number one spark plug.

(2) Using a dial indicator, set number one cylinder to TDC on the compression stroke.

(3) Remove the access plug from the front timing belt cover.

(4) Check the timing marks on the camshaft sprockets, they should align with each other (Fig. 134).

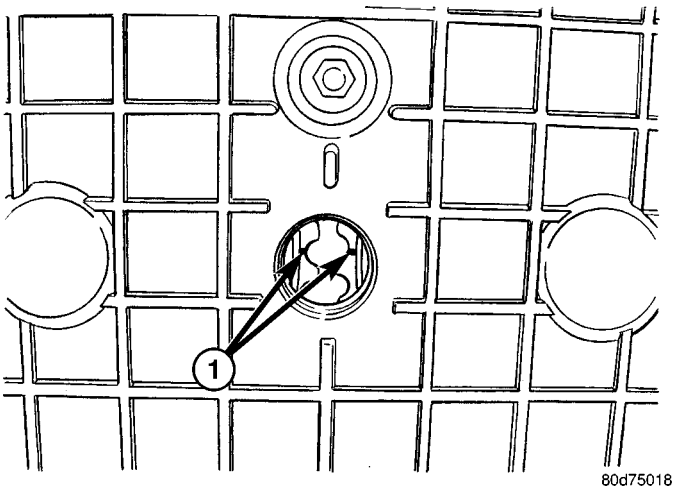

Fig. 134 Camshaft Timing Check

1 - CAMSHAFT TIMING MARKS SHOULD LINE UP

TIMING BELT COVER(S)

REMOVAL

FRONT COVER

(1) Disconnect negative battery cable.

(2) Raise vehicle on hoist. Remove right front wheel.

(3) Remove the right splash shield.

(4) Remove accessory drive belts (Refer to 7 - COOLING/ACCESSORY DRIVE/DRIVE BELTS - REMOVAL).

(5) Remove crankshaft damper (Refer to 9 - ENGINE/ENGINE BLOCK/VIBRATION DAMPER - REMOVAL).

(6) Remove the lower torque strut (Refer to 9 - ENGINE/ENGINE MOUNTING/TORQUE STRUT - REMOVAL).

(7) Disconnect exhaust system from manifold.

(8) Disconnect A/C pressure switch at rear of compressor housing.

(9) Lower vehicle and support engine with a jack.

(10) Discharge A/C system and disconnect A/C lines at coupling block (Refer to 24 - HEATING & AIR CONDITIONING - STANDARD PROCEDURE).

(11) Remove upper torque strut (Refer to 9 - ENGINE/ENGINE MOUNTING/TORQUE STRUT - REMOVAL).

(12) Remove screw attaching ground strap to strut bracket.

(13) Remove torque strut bracket from strut tower.

(14) Remove upper radiator support crossmember (Refer to 23 - BODY/EXTERIOR/RADIATOR CROSS-MEMBER - REMOVAL).

(15) Remove power steering pump and bracket. Set pump aside. **Do not disconnect lines from pump.**

(16) With engine properly supported, remove right engine mount through bolt.

(17) Raise engine with jack until front engine mount bracket bolts are accessible.

(18) Remove front engine mount bracket (Fig. 135).

(19) Remove the front timing belt cover (Fig. 135).

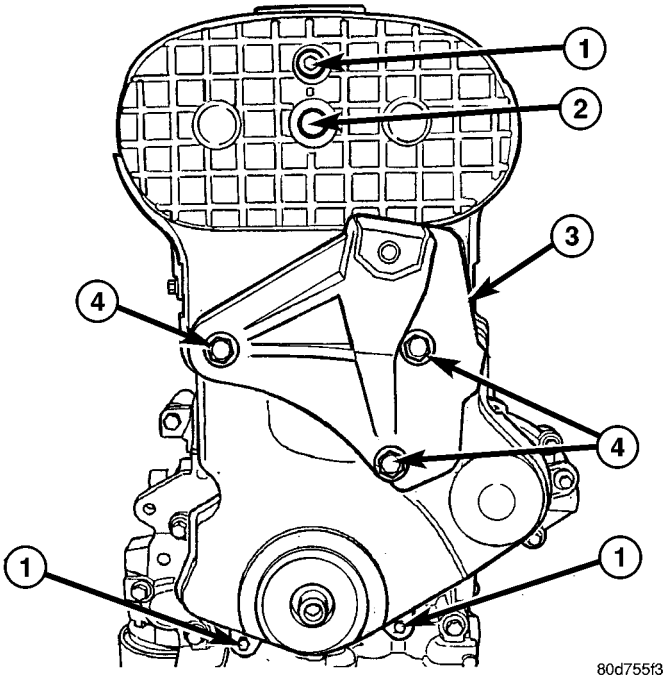

Fig. 135 Front Timing Belt Cover

1 - FRONT TIMING BELT COVER FASTENERS
2 - ACCESS PLUG
3 - FRONT ENGINE MOUNT BRACKET
4 - FASTENERS

REAR COVER

(1) Remove front timing belt cover.

CAUTION: Camshaft(s) or crankshaft should not be rotated after timing belt is removed. Damage to valve components may occur. Always align timing marks before removing timing belt.

TIMING BELT COVER(S) (Continued)

(2) Remove timing belt(Refer to 9 - ENGINE/VALVE TIMING/TIMING BELT AND SPROCKETS - REMOVAL).

(3) Remove timing belt idler pulley and timing belt tensioner assembly (Refer to 9 - ENGINE/VALVE TIMING/TIMING BELT TENSIONER & PULLEY - REMOVAL).

(4) Hold camshaft sprockets with Special Tools C-4687 and Adaptor C-4687-1 (Fig. 136), while removing attaching bolts.

(5) Remove camshaft sprockets.

(6) Remove rear timing belt cover attaching bolts.

(7) Remove rear cover.

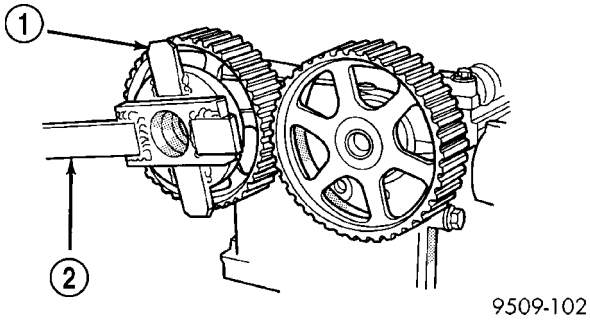

Fig. 136 Camshaft Sprocket - Removal/Installation

1 - ADAPTER C-4687–1
2 - SPECIAL TOOL C-4687

INSTALLATION

REAR COVER

(1) Install rear cover and tighten bolts to 12 N·m (105 in. lbs.).

(2) Install camshaft sprockets. While holding sprockets with Special Tools C-4687 and Adaptor C-4687-1 (Fig. 136), tighten attaching bolts to 115 N·m (85 ft. lbs.).

(3) Install timing belt idler pulley and timing belt tensioner assembly (Refer to 9 - ENGINE/VALVE TIMING/TMNG BELT/CHAIN TENSIONER&PULLEY - INSTALLATION).

(4) Install timing belt (Refer to 9 - ENGINE/VALVE TIMING/TIMING BELT AND SPROCKETS - INSTALLATION).

(5) Install front cover.

FRONT COVER

(1) Install front cover and tighten bolts to 12 N·m (105 in. lbs.).

(2) Install engine mount bracket (Fig. 135). Ensure the power steering pump is properly located in mounting location on bracket. Tighten mount bracket bolts to 61 N·m (45 ft. lbs.).

(3) Lower engine into mounting position and install right engine mount through bolt. Tighten bolt to 118 N·m (87 ft. lbs.).

(4) Install power steering pump and bracket.

(5) Install upper radiator support crossmember (Refer to 23 - BODY/EXTERIOR/RADIATOR CROSS-MEMBER - INSTALLATION).

(6) Install torque strut bracket to strut tower.

(7) Connect ground strap to bracket.

(8) Install upper torque strut.

(9) Connect A/C lines and charge A/C system (Refer to 24 - HEATING & AIR CONDITIONING - STANDARD PROCEDURE).

(10) Remove jack from under engine.

(11) Raise vehicle.

(12) Connect exhaust system to manifold.

(13) Connect A/C pressure switch connector.

(14) Install crankshaft damper (Refer to 9 - ENGINE/ENGINE BLOCK/VIBRATION DAMPER - INSTALLATION).

(15) Install accessory drive belts (Refer to 7 - COOLING/ACCESSORY DRIVE/DRIVE BELTS - INSTALLATION).

(16) Install lower torque strut (Refer to 9 - ENGINE/ENGINE MOUNTING/TORQUE STRUT - INSTALLATION).

(17) Perform torque strut adjustment procedure (Refer to 9 - ENGINE/ENGINE MOUNTING/TORQUE STRUT - ADJUSTMENTS).

(18) Install right splash shield.

(19) Install right front wheel.

(20) Connect negative cable to battery.

TIMING BELT AND SPROCKETS

REMOVAL

REMOVAL - TIMING BELT

CAUTION: Camshaft(s) or crankshaft should not be rotated after timing belt is removed. Damage to valve components may occur. Always align timing marks before removing timing belt.

(1) Remove the front timing belt cover (Fig. 137) (Refer to 9 - ENGINE/VALVE TIMING/TIMING BELT COVER(S) - REMOVAL).

CAUTION: Align camshaft and crankshaft timing marks before removing the timing belt by rotating the engine CLOCKWISE with the crankshaft.

TIMING BELT AND SPROCKETS (Continued)

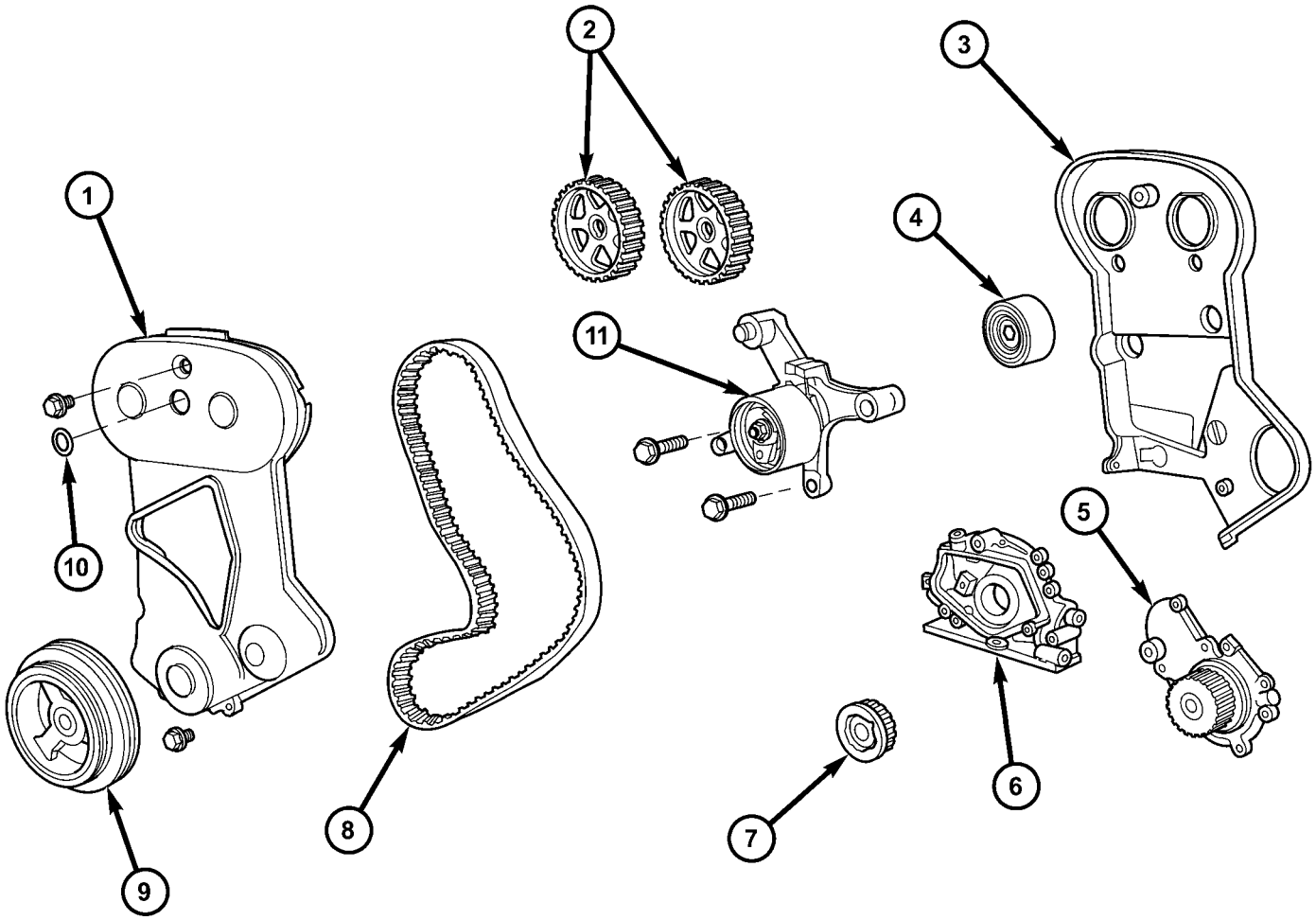

Fig. 137 Timing Belt System - 2.0L DOHC

1 - FRONT TIMING BELT COVER
2 - CAMSHAFT SPROCKETS
3 - REAR TIMING BELT COVER
4 - IDLER PULLEY
5 - WATER PUMP
6 - OIL PUMP
7 - CRANKSHAFT SPROCKET
8 - TIMING BELT
9 - CRANKSHAFT DAMPER
10 - ACCESS PLUG
11 - TIMING BELT TENSIONER

(2) Rotate crankshaft until timing marks are aligned at both the camshafts and crankshaft (Fig. 138) and (Fig. 139).

(3) Loosen timing belt tensioner lock nut (Fig. 140).

(4) Insert a 6 mm Allen wrench into the hexagon opening located on the top plate of the belt tensioner pulley. Rotate the top plate **CLOCKWISE** until there is enough slack in timing belt to allow for removal (Fig. 140).

(5) Remove timing belt.

CAUTION: Do not rotate the camshaft(s) once the timing belt has been removed or damage to valve components may occur.

TIMING BELT AND SPROCKETS (Continued)

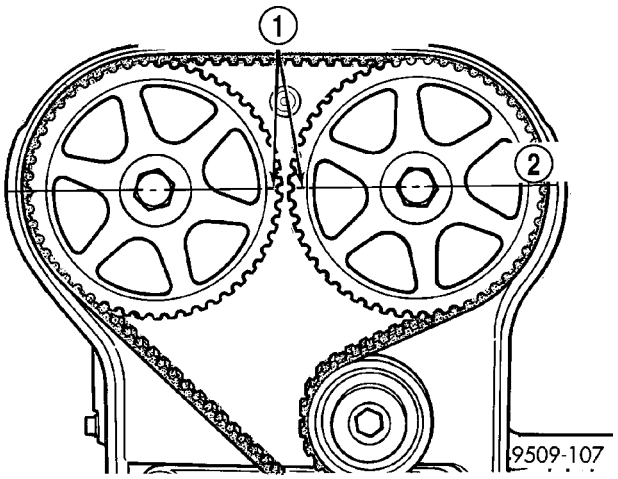

Fig. 138 Camshaft Timing Marks

1 - ALIGN CAMSHAFT SPROCKET TIMING MARKS TOGETHER
2 - CENTERLINE

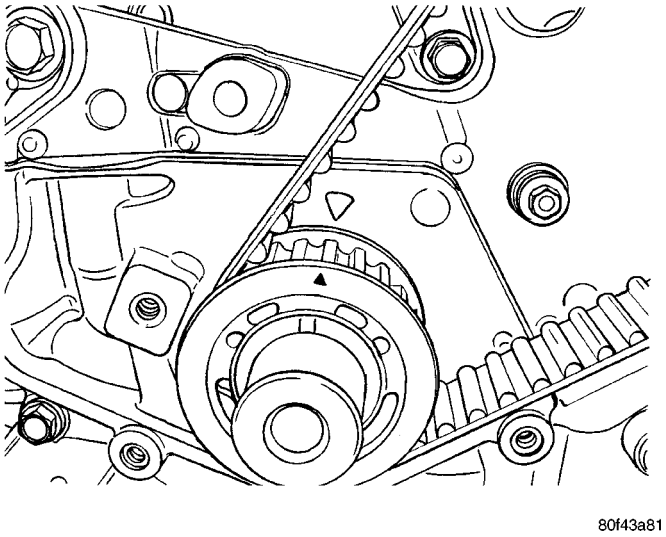

Fig. 139 Crankshaft Timing Mark Alignment

REMOVAL - CAMSHAFT SPROCKET(S)

(1) Disconnect negative battery cable.

(2) Remove timing belt (Refer to 9 - ENGINE/ VALVE TIMING/TIMING BELT AND SPROCKETS - REMOVAL).

(3) Hold camshaft sprockets with Special Tools C-4687 and Adaptor C-4687-1 (Fig. 141), while removing attaching bolts. Remove camshaft sprockets.

REMOVAL - CRANKSHAFT SPROCKET

(1) Disconnect negative battery cable.

(2) Remove timing belt (Refer to 9 - ENGINE/ VALVE TIMING/TIMING BELT AND SPROCKETS - REMOVAL).

(3) Remove crankshaft sprocket using Special Tools 6793 and insert C-4685-C2 (Fig. 142).

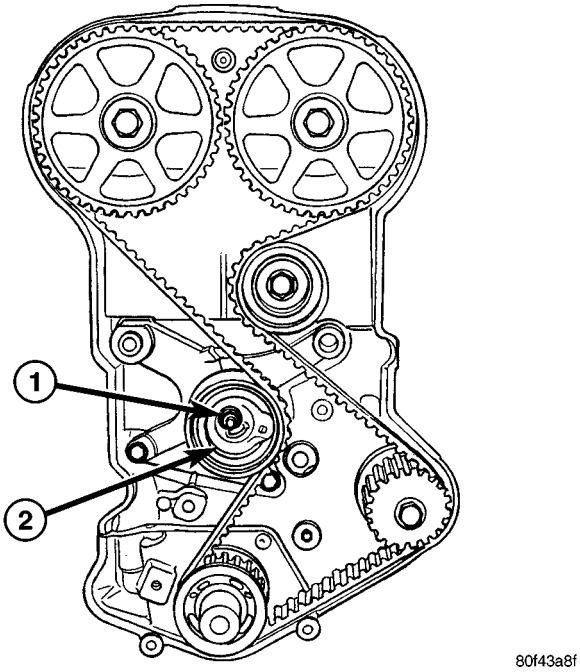

Fig. 140 Timing Belt Removal

1 - LOCK NUT
2 - TOP PLATE

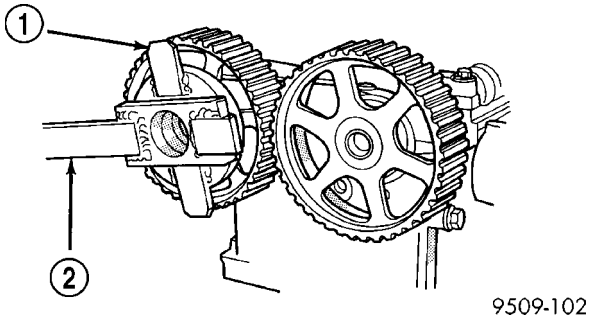

Fig. 141 Camshaft Sprocket - Removal/Installation

1 - ADAPTER C-4687–1
2 - SPECIAL TOOL C-4687

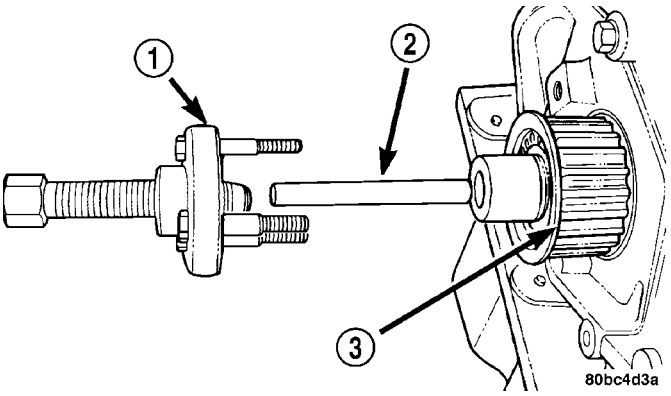

Fig. 142 Crankshaft Sprocket - Removal

1 - SPECIAL TOOL 6793
2 - SPECIAL TOOL C-4685–C2
3 - CRANKSHAFT SPROCKET

TIMING BELT AND SPROCKETS (Continued)

CLEANING

Do Not attempt to clean a timing belt. If contamination from oil, grease, or coolants have occurred, the timing belt should be replaced.

Clean all sprockets using a suitable solvent. Clean all sprocket grooves of any debris.

INSTALLATION

INSTALLATION - CRANKSHAFT SPROCKET

CAUTION: The crankshaft sprocket is set to a predetermined depth from the factory for correct timing belt tracking. If removed, use of Special Tool 6792 is required to set the sprocket to original installation depth. An incorrectly installed sprocket will result in timing belt and engine damage.

(1) Install crankshaft sprocket using Special Tool 6792 (Fig. 143).

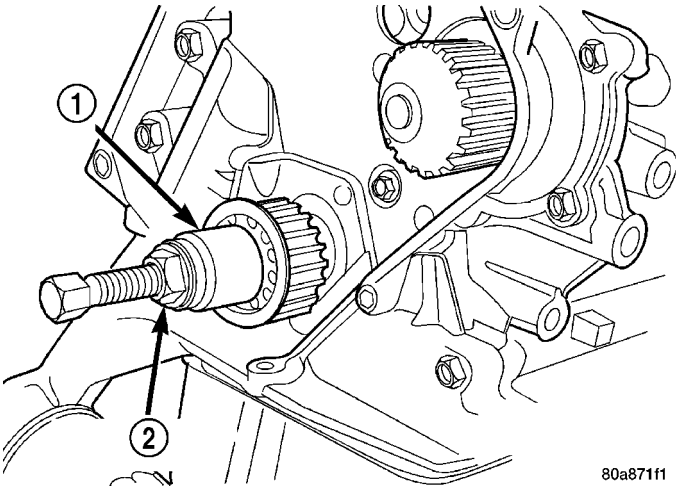

Fig. 143 Crankshaft Sprocket—Installation

1 - SPECIAL TOOL 6792
2 - TIGHTEN NUT TO INSTALL

(2) Install timing belt (Refer to 9 - ENGINE/VALVE TIMING/TIMING BELT AND SPROCKETS - INSTALLATION).

(3) Connect negative battery cable.

INSTALLATION - CAMSHAFT SPROCKETS

(1) Install camshaft sprockets. Hold camshaft sprockets with Special Tools C-4687 and Adaptor C-4687-1 while tightening center bolts to 115 N·m (85 ft. lbs.) (Fig. 141).

(2) Install timing belt (Refer to 9 - ENGINE/VALVE TIMING/TIMING BELT AND SPROCKETS - INSTALLATION).

(3) Connect negative battery cable.

INSTALLATION - TIMING BELT

(1) Set crankshaft sprocket to TDC by aligning the sprocket with the arrow on the oil pump housing, then back off to 3 notches before TDC (Fig. 144).

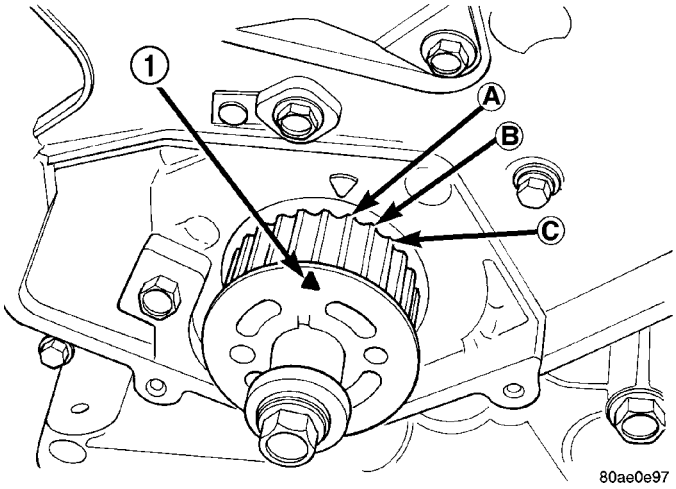

Fig. 144 Crankshaft Sprocket Timing

1 - TDC MARK

(2) Set camshafts timing marks together by aligning notches on sprockets (Fig. 145).

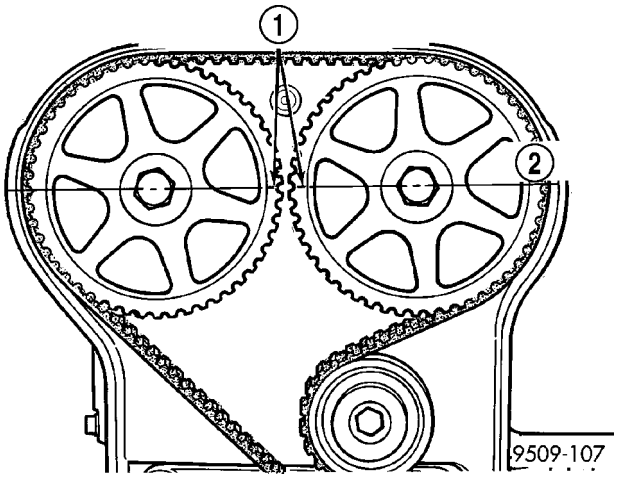

Fig. 145 Camshaft Timing Marks

1 - ALIGN CAMSHAFT SPROCKET TIMING MARKS TOGETHER
2 - CENTERLINE

(3) Rotate crankshaft 1/2 tooth counterclockwise from TDC (Fig. 146).

(4) Install the timing belt. Starting at the crankshaft, go around the water pump sprocket, idler pulley, camshaft sprockets, and finally route the back side of the timing belt around the timing belt tensioner pulley.

(5) Move crankshaft sprocket to TDC to take up belt slack.

(6) Insert a 6 mm Allen wrench into the hexagon opening located on the top plate of the belt tensioner

TIMING BELT AND SPROCKETS (Continued)

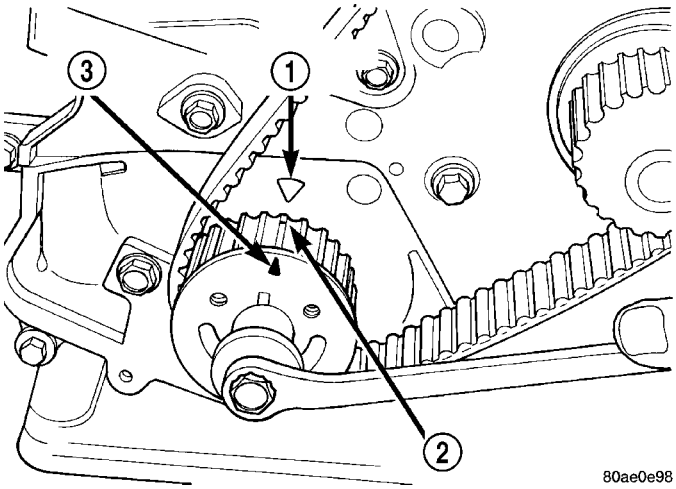

Fig. 146 Adjusting Crankshaft Sprocket for Timing Belt

1 - TDC REFERENCE MARK
2 - 1/2 NOTCH LOCATION
3 - TDC MARK

pulley. Rotate the top plate **COUNTERCLOCKWISE**. The tensioner pulley will move against the belt and the tensioner setting notch will eventually start to move clockwise. Watching the movement of the setting notch, continue rotating the top plate counterclockwise until the setting notch is aligned with the spring tang (Fig. 147). Using the allen wrench to prevent the top plate from moving, torque the tensioner lock nut to 30 N·m (22 ft. lbs.). Setting notch and spring tang should remain aligned after lock nut is torqued.

(7) Remove allen wrench and torque wrench.

NOTE: Repositioning the crankshaft to the TDC position must be done only during the CLOCKWISE rotation movement. If TDC is missed, rotate a further two revolutions until TDC is achieved. DO NOT rotate crankshaft counterclockwise as this will make verification of proper tensioner setting impossible.

(8) Rotate the crankshaft CLOCKWISE two complete revolutions manually for seating of the belt, until the crankshaft is repositioned at the TDC position. Verify that the camshaft and crankshaft timing marks are in proper position.

(9) Check if the spring tang is within the tolerance window (Fig. 148). If the spring tang is within the tolerance window, the installation process is complete and nothing further is required. If the spring tang is not within the tolerance window, repeat Steps 6 through 8.

(10) Install the front timing belt cover (Refer to 9 - ENGINE/VALVE TIMING/TIMING BELT COVER(S) - INSTALLATION).

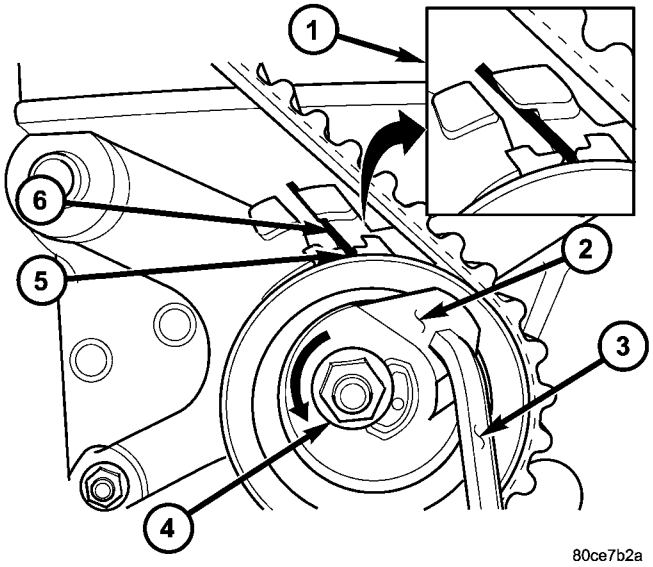

Fig. 147 Timing Belt Tension Adjustment

1 - ALIGN SETTING NOTCH WITH SPRING TANG
2 - TOP PLATE
3 - 6mm ALLEN WRENCH
4 - LOCK NUT
5 - SETTING NOTCH
6 - SPRING TANG

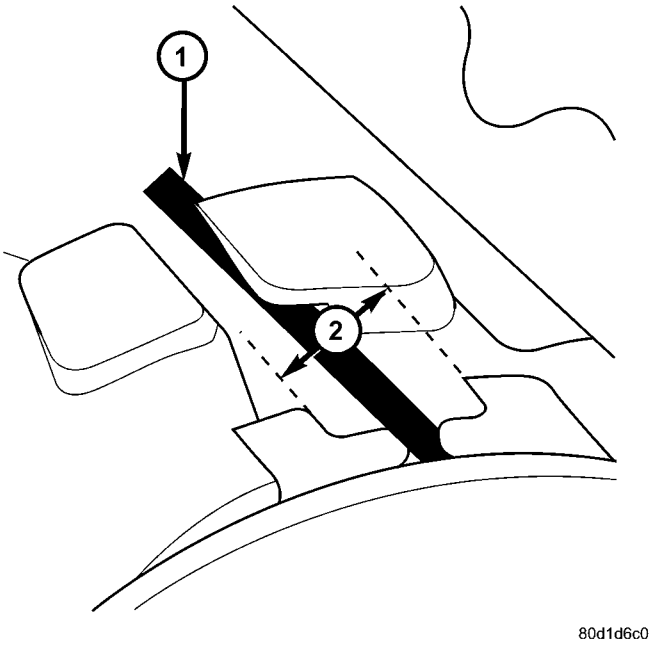

Fig. 148 Timing Belt Tension Verification

1 - SPRING TANG
2 - TOLERANCE WINDOW

TIMING BELT TENSIONER & PULLEY

REMOVAL

(1) Remove the timing belt (Refer to 9 - ENGINE/VALVE TIMING/TIMING BELT AND SPROCKETS - REMOVAL).

(2) Remove bolts attaching the timing belt tensioner assembly to engine.

(3) Remove the timing belt tensioner assembly (Fig. 149).

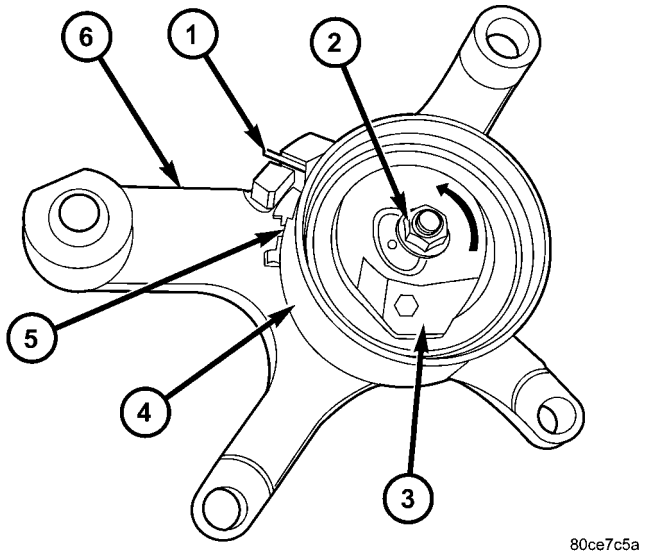

Fig. 149 Timing Belt Tensioner Assembly

1 - SPRING TANG
2 - LOCK NUT
3 - TOP PLATE
4 - PULLEY
5 - SETTING NOTCH
6 - BRACKET

INSTALLATION

(1) Position timing belt tensioner assembly to the engine. To ensure proper alignment of tensioner to engine block, temporarily install the engine mount bracket bolts into the upper holes of the timing belt tensioner. Install timing belt tensioner lower mounting bolts. Tighten lower mounting bolts to 31 N·m (23 ft. lbs.). Remove temporarily installed engine mount bracket bolts.

(2) Install the timing belt (Refer to 9 - ENGINE/VALVE TIMING/TIMING BELT AND SPROCKETS - INSTALLATION).

ENGINE 2.4L DOHC

TABLE OF CONTENTS

page

ENGINE 2.4L DOHC
DESCRIPTION 151
DIAGNOSIS AND TESTING
DIAGNOSIS AND TESTING - ENGINE DIAGNOSIS - INTRODUCTION 151
DIAGNOSIS AND TESTING - ENGINE DIAGNOSIS - PERFORMANCE 152
DIAGNOSIS AND TESTING - ENGINE DIAGNOSIS - MECHANICAL 154
DIAGNOSIS AND TESTING - CYLINDER COMBUSTION PRESSURE LEAKAGE TEST 156
DIAGNOSIS AND TESTING - CYLINDER COMPRESSION PRESSURE TEST 156
DIAGNOSIS AND TESTING - ENGINE OIL LEAK INSPECTION 157
STANDARD PROCEDURE
STANDARD PROCEDURE - REPAIR OF DAMAGED OR WORN THREADS 158
STANDARD PROCEDURE - HYDROSTATIC LOCKED ENGINE 158
STANDARD PROCEDURE - FORM-IN-PLACE GASKETS AND SEALERS 158
STANDARD PROCEDURE - ENGINE GASKET SURFACE PREPARATION 159
STANDARD PROCEDURE - ENGINE CORE AND OIL GALLERY PLUGS 160
STANDARD PROCEDURE - MEASURING BEARING CLEARANCE USING PLASTIGAGE 160
REMOVAL - ENGINE ASSEMBLY 160
INSTALLATION - ENGINE ASSEMBLY 164
SPECIFICATIONS
2.4L ENGINE 166
TORQUE 169
SPECIAL TOOLS
2.4L ENGINE 170
AIR CLEANER ELEMENT
REMOVAL 173
INSTALLATION 173
AIR CLEANER HOUSING
REMOVAL 173
INSTALLATION 173
CYLINDER HEAD
DESCRIPTION 174
DIAGNOSIS AND TESTING—CYLINDER HEAD GASKET 174
REMOVAL - CYLINDER HEAD 175
CLEANING 177
INSPECTION 177
INSTALLATION - CYLINDER HEAD 177
CAMSHAFT OIL SEAL(S)
REMOVAL 179
INSTALLATION 179
CAMSHAFT(S)
DESCRIPTION 180
OPERATION 180
STANDARD PROCEDURE - MEASURING CAMSHAFT END PLAY 180
REMOVAL 180
CLEANING 181
INSPECTION 181
INSTALLATION 181
CYLINDER HEAD COVER
REMOVAL 182
INSTALLATION 182
HYDRAULIC LASH ADJUSTERS
DIAGNOSIS AND TESTING
HYDRAULIC LASH ADJUSTER NOISE DIAGNOSIS 184
REMOVAL 184
INSTALLATION 184
INTAKE/EXHAUST VALVES & SEATS
DESCRIPTION 185
OPERATION 185
CLEANING 185
ROCKER ARMS
REMOVAL 185
INSPECTION 185
INSTALLATION 185
VALVE SPRINGS & SEALS
REMOVAL
REMOVAL - CYLINDER HEAD ON 186
REMOVAL - CYLINDER HEAD OFF 186
INSPECTION 186
INSTALLATION
INSTALLATION - CYLINDER HEAD ON 186
INSTALLATION - CYLINDER HEAD OFF . . . 187
ENGINE BLOCK
DESCRIPTION 187
STANDARD PROCEDURE - CYLINDER BORE HONING 187
CLEANING 188
INSPECTION 188
CRANKSHAFT
STANDARD PROCEDURE - MEASURING CRANKSHAFT END PLAY 189
REMOVAL - CRANKSHAFT 189
INSPECTION 190
INSTALLATION - CRANKSHAFT 190

CRANKSHAFT OIL SEAL - FRONT
REMOVAL 192
INSTALLATION 192
CRANKSHAFT OIL SEAL - REAR
REMOVAL 193
INSTALLATION 193
PISTON & CONNECTING ROD
DESCRIPTION 195
STANDARD PROCEDURE - PISTON TO CYLINDER BORE FITTING 195
REMOVAL 195
INSTALLATION 197
CONNECTING ROD BEARINGS
STANDARD PROCEDURE CONNECTING ROD - FITTING 198
PISTON RINGS
STANDARD PROCEDURE PISTON RING - FITTING 198
REMOVAL 199
INSTALLATION 199
STRUCTURAL COLLAR
REMOVAL 200
INSTALLATION 200
VIBRATION DAMPER
REMOVAL 201
INSTALLATION 201
ENGINE MOUNTING
DESCRIPTION 202
OPERATION 202
LEFT MOUNT
REMOVAL 202
INSTALLATION 202
RIGHT MOUNT
REMOVAL 203
INSTALLATION 203
TORQUE STRUT
REMOVAL
REMOVAL - UPPER 204
REMOVAL - LOWER 204
INSTALLATION
INSTALLATION - UPPER 204
INSTALLATION - LOWER 205
ADJUSTMENTS
ENGINE TORQUE STRUT ADJUSTMENT . . 205
LUBRICATION
DESCRIPTION 206
OPERATION 206
DIAGNOSIS AND TESTING - CHECKING ENGINE OIL PRESSURE 206
OIL
STANDARD PROCEDURE
ENGINE OIL LEVEL CHECK 207
STANDARD PROCEDURE - ENGINE OIL AND FILTER CHANGE 207
OIL FILTER
REMOVAL 209
INSTALLATION 209
OIL FILTER ADAPTER
REMOVAL 209
INSTALLATION 209
OIL PAN
REMOVAL 210
INSTALLATION 210
OIL PRESSURE SENSOR/SWITCH
DESCRIPTION 210
OPERATION 211
REMOVAL 211
INSTALLATION 211
OIL PUMP
REMOVAL 211
DISASSEMBLY 211
CLEANING 211
INSPECTION 212
ASSEMBLY 212
INSTALLATION 213
OIL JET - 2.4L TURBO
DESCRIPTION 214
REMOVAL 214
INSTALLATION 214
OIL COOLER & LINES - 2.4L TURBO
DESCRIPTION 215
REMOVAL 215
INSTALLATION 215
INTAKE MANIFOLD
DIAGNOSIS AND TESTING - INTAKE MANIFOLD LEAKS 216
REMOVAL
REMOVAL - UPPER INTAKE MANIFOLD . . . 216
REMOVAL - LOWER INTAKE MANIFOLD . . . 220
CLEANING 221
INSPECTION 221
INSTALLATION
INSTALLATION - UPPER INTAKE MANIFOLD. 221
INSTALLATION - LOWER INTAKE MANIFOLD. 222
EXHAUST MANIFOLD
REMOVAL 223
CLEANING 224
INSPECTION 224
INSTALLATION 224
TIMING BELT COVER(S)
REMOVAL 225
INSTALLATION 225
TIMING BELT AND SPROCKETS
REMOVAL
REMOVAL - TIMING BELT 227
REMOVAL - CAMSHAFT SPROCKET(S) . . . 227
REMOVAL - CRANKSHAFT SPROCKET . . . 228
INSTALLATION
INSTALLATION - CRANKSHAFT SPROCKET 228
INSTALLATION - CAMSHAFT SPROCKET(S) 229

INSTALLATION - TIMING BELT 229
TIMING BELT TENSIONER & PULLEY
REMOVAL 231
INSTALLATION 231
BALANCE SHAFTS AND CARRIER ASSEMBLY
DESCRIPTION 232
OPERATION 232
REMOVAL 232
INSTALLATION 233

ENGINE 2.4L DOHC

DESCRIPTION

The 2.4 Liter (148 cu. in.) in-line four cylinder engine is a double over head camshaft with hydraulic lash adjusters and four valve per cylinder design. The engine is free-wheeling; meaning it has provisions for piston-to-valve clearance. However valve-to-valve interference can occur, if camshafts are rotated independently.

The cylinders are numbered from front of the engine to the rear. The firing order is 1–3–4–2.

The engine identification number is located on the rear of the cylinder block (Fig. 1).

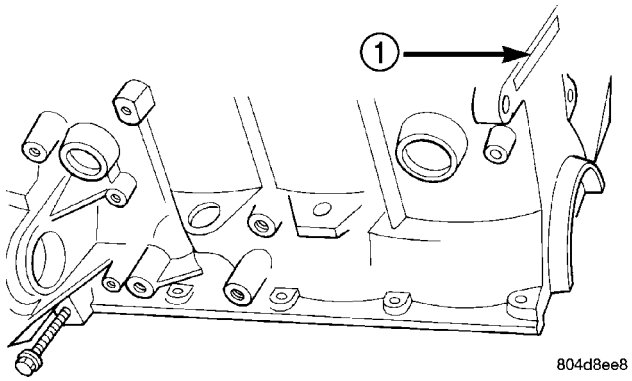

Fig. 1 Engine Identification

1 - ENGINE IDENTIFICATION LOCATION

DIAGNOSIS AND TESTING

DIAGNOSIS AND TESTING - ENGINE DIAGNOSIS - INTRODUCTION

Engine diagnosis is helpful in determining the causes of malfunctions not detected and remedied by routine maintenance.

These malfunctions may be classified as either mechanical (e.g., a strange noise), or performance (e.g., engine idles rough and stalls).

Refer to the Engine Mechanical and the Engine Performance diagnostic charts, for possible causes and corrections of malfunctions (Refer to 9 - ENGINE - DIAGNOSIS AND TESTING - MECHANICAL) (Refer to 9 - ENGINE - DIAGNOSIS AND TESTING - PERFORMANCE).

For fuel system diagnosis, (Refer to 14 - FUEL SYSTEM/FUEL DELIVERY - DIAGNOSIS AND TESTING).

Additional tests and diagnostic procedures may be necessary for specific engine malfunctions that cannot be isolated with the Service Diagnosis charts. Information concerning additional tests and diagnosis is provided within the following:

- Cylinder Compression Pressure Test
- Cylinder Combustion Pressure Leakage Test
- Engine Cylinder Head Gasket Failure Diagnosis
- Intake Manifold Leakage Diagnosis
- Hydraulic Lash Adjuster Noise Diagnosis
- Engine Oil Leak Inspection

ENGINE 2.4L DOHC (Continued)

DIAGNOSIS AND TESTING - ENGINE DIAGNOSIS - PERFORMANCE

CONDITION	POSSIBLE CAUSE	CORRECTION
ENGINE WILL NOT START	1. Weak battery.	1. Test battery. Charge or replace as necessary. (Refer to 8 - ELECTRICAL/BATTERY SYSTEM - DIAGNOSIS AND TESTING)
	2. Corroded or loose battery connections.	2. Clean and tighten battery connections. Apply a coat of light mineral grease to terminals.
	3. Faulty starter.	3. Test starting system. (Refer to 8 - ELECTRICAL/STARTING - DIAGNOSIS AND TESTING)
	4. Faulty coil(s) or control unit.	4. Test and replace as needed. (Refer to Appropriate Diagnostic Information)
	5. Incorrect spark plug gap.	5. Set gap. (Refer to 8 - ELECTRICAL/IGNITION CONTROL - SPECIFICATIONS)
	6. Contamination in fuel system.	6. Clean system and replace fuel filter.
	7. Faulty fuel pump.	7. Test fuel pump and replace as needed. (Refer to Appropriate Diagnostic Information)
	8. Incorrect engine timing.	8. Check for a skipped timing belt/chain.
ENGINE STALLS OR IDLES ROUGH	1. Idle speed too low.	1. Test minimum air flow. (Refer to Appropriate Diagnostic Information)
	2. Incorrect fuel mixture.	2. (Refer to Appropriate Diagnostic Information)
	3. Intake manifold leakage.	3. Inspect intake manifold, manifold gasket, and vacuum hoses.
	4. Faulty ignition coil(s).	4. Test and replace as necessary. (Refer to Appropriate Diagnostic Information)

ENGINE 2.4L DOHC (Continued)

CONDITION	POSSIBLE CAUSE	CORRECTION
ENGINE LOSS OF POWER	1. Dirty or incorrectly gapped plugs.	1. Clean plugs and set gap.
	2. Contamination in fuel system.	2. Clean system and replace fuel filter.
	3. Faulty fuel pump.	3. Test and replace as necessary. (Refer to Appropriate Diagnostic Information)
	4. Incorrect valve timing.	4. Correct valve timing.
	5. Leaking cylinder head gasket.	5. Replace cylinder head gasket.
	6. Low compression.	6. Test compression of each cylinder.
	7. Burned, warped, or pitted valves.	7. Replace valves.
	8. Plugged or restricted exhaust system.	8. Perform exhaust restriction test. (Refer to 11 - EXHAUST SYSTEM - DIAGNOSIS AND TESTING) Install new parts, as necessary.
	9. Faulty ignition coil(s).	9. Test and replace as necessary. (Refer to Appropriate Diagnostic Information)
ENGINE MISSES ON ACCELERATION	1. Dirty or incorrectly gapped spark plugs.	1. Clean spark plugs and set gap.
	2. Contamination in Fuel System.	2. Clean fuel system and replace fuel filter.
	3. Burned, warped, or pitted valves.	3. Replace valves.
	4. Faulty ignition coil(s).	4. Test and replace as necessary. (Refer to Appropriate Diagnostic Information)
ENGINE MISSES AT HIGH SPEED	1. Dirty or incorrect spark plug gap.	1. Clean spark plugs and set gap.
	2. Faulty ignition coil(s).	2. Test and replace as necessary. (Refer to Appropriate Diagnostic Information)
	3. Dirty fuel injector(s).	3. Test and replace as necessary. (Refer to Appropriate Diagnostic Information)
	4. Contamination in fuel system.	4. Clean system and replace fuel filter.

ENGINE 2.4L DOHC (Continued)

DIAGNOSIS AND TESTING - ENGINE DIAGNOSIS - MECHANICAL

CONDITION	POSSIBLE CAUSES	CORRECTION
NOISY VALVES	1. High or low oil level in crankcase.	1. Check and correct engine oil level.
	2. Thin or diluted oil.	2. Change oil to correct viscosity.
	3. Thick oil	3. (a) Change engine oil and filter. (b) Run engine to operating temperature. (c) Change engine oil and filter again.
	4. Low oil pressure.	4. Check and correct engine oil level.
	5. Dirt in tappets/lash adjusters.	5. Replace rocker arm/hydraulic lash adjuster assembly.
	6. Worn rocker arms.	6. Inspect oil supply to rocker arms.
	7. Worn tappets/lash adjusters.	7. Install new rocker arm/hydraulic lash adjuster assembly.
	8. Worn valve guides.	8. Ream guides and install new valves with oversize stems.
	9. Excessive runout of valve seats on valve faces.	9. Grind valve seats and valves.
	10. Missing adjuster pivot.	10. Replace rocker arm/hydraulic lash adjuster assembly.
CONNECTING ROD NOISE	1. Insufficient oil supply.	1. Check engine oil level.
	2. Low oil pressure.	2. Check engine oil level. Inspect oil pump relief valve and spring.
	3. Thin or diluted oil.	3. Change oil to correct viscosity.
	4. Thick oil	4. (a) Change engine oil and filter. (b) Run engine to operating temperature. (c) Change engine oil and filter again.
	5. Excessive bearing clearance.	5. Measure bearings for correct clearance. Repair as necessary.
	6. Connecting rod journal out-of-round.	6. Replace crankshaft or grind surface.
	7. Misaligned connecting rods.	7. Replace bent connecting rods.

ENGINE 2.4L DOHC (Continued)

CONDITION	POSSIBLE CAUSES	CORRECTION
MAIN BEARING NOISE	1. Insufficient oil supply.	1. Check engine oil level.
	2. Low oil pressure.	2. Check engine oil level. Inspect oil pump relief valve and spring.
	3. Thin or diluted oil.	3. Change oil to correct viscosity.
	4. Thick oil	4. (a) Change engine oil and filter. (b) Run engine to operating temperature. (c) Change engine oil and filter again.
	5. Excessive bearing clearance.	5. Measure bearings for correct clearance. Repair as necessary.
	6. Excessive end play.	6. Check thrust bearing for wear on flanges.
	7. Crankshaft journal out-of-round or worn.	7. Replace crankshaft or grind journals.
	8. Loose flywheel or torque converter.	8. Tighten to correct torque.
OIL PRESSURE DROP	1. Low oil level.	1. Check engine oil level.
	2. Faulty oil pressure sending unit.	2. Install new sending unit.
	3. Low oil pressure.	3. Check sending unit and main bearing oil clearance.
	4. Clogged oil filter.	4. Install new oil filter.
	5. Worn parts in oil pump.	5. Replace worn parts or pump.
	6. Thin or diluted oil.	6. Change oil to correct viscosity.
	7. Oil pump relief valve stuck.	7. Remove valve and inspect, clean, or replace.
	8. Oil pump suction tube loose.	8. Remove oil pan and install new tube or clean, if necessary.
	9. Oil pump cover warped or cracked.	9. Install new oil pump.
	10. Excessive bearing clearance.	10. Measure bearings for correct clearance.
OIL LEAKS	1. Misaligned or deteriorated gaskets.	1. Replace gasket(s).
	2. Loose fastener, broken or porous metal part.	2. Tighten, repair or replace the part.
	3. Misaligned or deteriorated cup or threaded plug.	3. Replace as necessary.

ENGINE 2.4L DOHC (Continued)

CONDITION	POSSIBLE CAUSES	CORRECTION
OIL CONSUMPTION OR SPARK PLUGS FOULED	1. PCV system malfunction.	1. Check system and repair as necessary. (Refer to 25 - EMISSIONS CONTROL/ EVAPORATIVE EMISSIONS/PCV VALVE - DIAGNOSIS AND TESTING)
	2. Worn, scuffed or broken rings.	2. Hone cylinder bores. Install new rings.
	3. Carbon in oil ring slots.	3. Install new rings.
	4. Rings fitted too tightly in grooves.	4. Remove rings and check grooves. If groove is not proper width, replace piston.
	5. Worn valve guide(s).	5. Ream guide(s) and replace valve(s) with oversize valve(s) and seal(s).
	6. Valve stem seal(s) worn or damaged.	6. Replace seal(s).

DIAGNOSIS AND TESTING - CYLINDER COMBUSTION PRESSURE LEAKAGE TEST

The combustion pressure leakage test provides an accurate means for determining engine condition.

Combustion pressure leakage testing will detect:

- Exhaust and intake valve leaks (improper seating).
- Leaks between adjacent cylinders or into water jacket.
- Any causes for combustion/compression pressure loss.

WARNING: DO NOT REMOVE THE PRESSURE CAP WITH THE SYSTEM HOT AND UNDER PRESSURE BECAUSE SERIOUS BURNS FROM COOLANT CAN OCCUR.

Check the coolant level and fill as required. DO NOT install the pressure cap.

Start and operate the engine until it attains normal operating temperature, then turn the engine OFF.

Clean spark plug recesses with compressed air.

Remove the spark plugs.

Remove the oil filler cap.

Remove the air cleaner.

Calibrate the tester according to the manufacturer's instructions. The shop air source for testing should maintain 483 kPa (70 psi) minimum, 1,379 kPa (200 psi) maximum, with 552 kPa (80 psi) recommended.

Perform the test procedures on each cylinder according to the tester manufacturer's instructions. While testing, listen for pressurized air escaping through the throttle body, tailpipe and oil filler cap opening. Check for bubbles in the coolant.

All gauge pressure indications should be equal, with no more than 25% leakage per cylinder.

FOR EXAMPLE: At 552 kPa (80 psi) input pressure, a minimum of 414 kPa (60 psi) should be maintained in the cylinder.

DIAGNOSIS AND TESTING - CYLINDER COMPRESSION PRESSURE TEST

The results of a cylinder compression pressure test can be utilized to diagnose several engine malfunctions.

Ensure the battery is completely charged and the engine starter motor is in good operating condition. Otherwise the indicated compression pressures may not be valid for diagnosis purposes.

(1) Check engine oil level and add oil if necessary.

(2) Drive the vehicle until engine reaches normal operating temperature. Select a route free from traffic and other forms of congestion, observe all traffic laws, and accelerate through the gears several times briskly.

(3) Remove all spark plugs from engine. As spark plugs are being removed, check electrodes for abnormal firing indicators fouled, hot, oily, etc. Record cylinder number of spark plug for future reference.

(4) Remove the Auto Shutdown (ASD) relay from the PDC.

(5) Be sure throttle blade is fully open during the compression check.

(6) Insert compression gauge adaptor Special Tool 8116 or the equivalent, into the #1 spark plug hole in cylinder head. Connect the 0–500 psi (Blue) pressure

ENGINE 2.4L DOHC (Continued)

transducer (Special Tool CH7059) with cable adaptors to the DRBIII®. For Special Tool identification, (Refer to 9 - ENGINE - SPECIAL TOOLS).

(7) Crank engine until maximum pressure is reached on gauge. Record this pressure as #1 cylinder pressure.

(8) Repeat the previous step for all remaining cylinders.

(9) Compression should not be less than 689 kPa (100 psi) and not vary more than 25 percent from cylinder to cylinder.

(10) If one or more cylinders have abnormally low compression pressures, repeat the compression test.

(11) If the same cylinder or cylinders repeat an abnormally low reading on the second compression test, it could indicate the existence of a problem in the cylinder in question. **The recommended compression pressures are to be used only as a guide to diagnosing engine problems. An engine should not be disassembled to determine the cause of low compression unless some malfunction is present.**

DIAGNOSIS AND TESTING - ENGINE OIL LEAK INSPECTION

Begin with a thorough visual inspection of the engine, particularly at the area of the suspected leak. If an oil leak source is not readily identifiable, the following steps should be followed:

(1) Do not clean or degrease the engine at this time because some solvents may cause rubber to swell, temporarily stopping the leak.

(2) Add an oil soluble dye (use as recommended by manufacturer). Start the engine and let idle for approximately 15 minutes. Check the oil dipstick to make sure the dye is thoroughly mixed as indicated with a bright yellow color under a black light.

(3) Using a black light, inspect the entire engine for fluorescent dye, particularly at the suspected area of oil leak. If the oil leak is found and identified, repair as necessary.

(4) If dye is not observed, drive the vehicle at various speeds for approximately 24 km (15 miles), and repeat inspection.

(5) **If the oil leak source is not positively identified at this time**, proceed with the air leak detection test method as follows:

- Disconnect the fresh air hose (make-up air) at the cylinder head cover and plug or cap the nipple on the cover.
- Remove the PCV valve hose from the cylinder head cover. Cap or plug the PCV valve nipple on the cover.
- Attach an air hose with pressure gauge and regulator to the dipstick tube.

CAUTION: Do not subject the engine assembly to more than 20.6 kpa (3 PSI) of test pressure.

- Gradually apply air pressure from 1 psi to 2.5 psi maximum while applying soapy water at the suspected source. Adjust the regulator to the suitable test pressure that provides the best bubbles which will pinpoint the leak source. If the oil leak is detected and identified, repair per service manual procedures.
- If the leakage occurs at the crankshaft rear oil seal area, refer to the section, Inspection for Rear Seal Area Leak.

(6) If no leaks are detected, turn off the air supply. Remove the air hose, all plugs, and caps. Install the PCV valve and fresh air hose (make-up air). Proceed to next step.

(7) Clean the oil off the suspect oil leak area using a suitable solvent. Drive the vehicle at various speeds approximately 24 km (15 miles). Inspect the engine for signs of an oil leak by using a black light.

NOTE: If oil leakage is observed at the dipstick tube to block location; remove the tube, clean and reseal using Mopar® Stud & Bearing Mount (press fit tube applications only), and for O-ring style tubes, remove tube and replace the O-ring seal.

INSPECTION FOR REAR SEAL AREA LEAKS

Since it is sometimes difficult to determine the source of an oil leak in the rear seal area of the engine, a more involved inspection is necessary. The following steps should be followed to help pinpoint the source of the leak.

If the leakage occurs at the crankshaft rear oil seal area:

(1) Disconnect the battery.

(2) Raise the vehicle.

(3) Remove torque converter or clutch housing cover and inspect rear of block for evidence of oil. Use a black light to check for the oil leak. If a leak is present in this area, remove transmission for further inspection.

(a) Circular spray pattern generally indicates seal leakage or crankshaft damage.

(b) Where leakage tends to run straight down, possible causes are a porous block, oil gallery cup plug, bedplate to cylinder block mating surfaces and seal bore. See proper repair procedures for these items.

(4) If no leaks are detected, pressurize the crankcase as previously described.

CAUTION: Do not exceed 20.6 kPa (3 psi).

ENGINE 2.4L DOHC (Continued)

(5) If the leak is not detected, very slowly turn the crankshaft and watch for leakage. If a leak is detected between the crankshaft and seal while slowly turning the crankshaft, it is possible the crankshaft seal surface is damaged. The seal area on the crankshaft could have minor nicks or scratches that can be polished out with emery cloth.

CAUTION: Use extreme caution when crankshaft polishing is necessary to remove minor nicks and scratches. The crankshaft seal flange is especially machined to complement the function of the rear oil seal.

(6) For bubbles that remain steady with shaft rotation, no further inspection can be done until disassembled.

(7) After the oil leak root cause and appropriate corrective action have been identified, replace component(s) as necessary.

STANDARD PROCEDURE

STANDARD PROCEDURE - REPAIR OF DAMAGED OR WORN THREADS

Damaged or worn threads (excluding spark plug and camshaft bearing cap attaching threads) can be repaired. Essentially, this repair consists of drilling out worn or damaged threads, tapping the hole with a special Heli-Coil Tap, (or equivalent) and installing an insert into the tapped hole. This brings the hole back to its original thread size.

CAUTION: Be sure that the tapped holes maintain the original center line.

Heli-Coil tools and inserts are readily available from automotive parts jobbers.

STANDARD PROCEDURE - HYDROSTATIC LOCKED ENGINE

When an engine is suspected to be hydrostatically locked, regardless of what caused the problem, the following steps should be used.

CAUTION: DO NOT use starter motor to rotate the engine, severe damage may occur.

(1) Inspect air cleaner, induction system and intake manifold to insure system is dry and clear of foreign material.

(2) Remove negative battery cable.

(3) Place a shop towel around the spark plugs when removing them from the engine. This will catch any fluid that may possibly be in the cylinder under pressure.

(4) With all spark plugs removed, rotate engine crankshaft using a breaker bar and socket.

(5) Identify the fluid in the cylinder(s) (i.e., coolant, fuel, oil or other).

(6) Make sure all fluid has been removed from the cylinders. Inspect engine for damage (i.e., connecting rods, pistons, valves, etc.)

(7) Repair engine or components as necessary to prevent this problem from re-occurring.

CAUTION: Squirt approximately one teaspoon of oil into the cylinders, rotate engine to lubricate the cylinder walls to prevent damage on restart.

(8) Install new spark plugs.

(9) Drain engine oil and remove oil filter.

(10) Install a new oil filter.

(11) Fill engine with specified amount of approved oil.

(12) Connect negative battery cable.

(13) Start engine and check for any leaks.

STANDARD PROCEDURE - FORM-IN-PLACE GASKETS AND SEALERS

There are numerous places where form-in-place gaskets are used on the engine. Care must be taken when applying form-in-place gaskets to assure obtaining the desired results. **Do not use form-in-place gasket material unless specified.** Bead size, continuity, and location are of great importance. Too thin a bead can result in leakage while too much can result in spill-over which can break off and obstruct fluid feed lines. A continuous bead of the proper width is essential to obtain a leak-free gasket.

There are numerous types of form-in-place gasket materials that are used in the engine area. Mopar® Engine RTV GEN II, Mopar® ATF-RTV, and Mopar® Gasket Maker gasket materials, each have different properties and can not be used in place of the other.

MOPAR® ENGINE RTV GEN II is used to seal components exposed to engine oil. This material is a specially designed black silicone rubber RTV that retains adhesion and sealing properties when exposed to engine oil. Moisture in the air causes the material to cure. This material is available in three ounce tubes and has a shelf life of one year. After one year this material will not properly cure. Always inspect the package for the expiration date before use.

MOPAR® ATF RTV is a specifically designed black silicone rubber RTV that retains adhesion and sealing properties to seal components exposed to automatic transmission fluid, engine coolants, and moisture. This material is available in three ounce tubes and has a shelf life of one year. After one year

ENGINE 2.4L DOHC (Continued)

this material will not properly cure. Always inspect the package for the expiration date before use.

MOPAR® GASKET MAKER is an anaerobic type gasket material. The material cures in the absence of air when squeezed between two metallic surfaces. It will not cure if left in the uncovered tube. The anaerobic material is for use between two machined surfaces. Do not use on flexible metal flanges.

MOPAR® BED PLATE SEALANT is a unique (green-in-color) anaerobic type gasket material that is specially made to seal the area between the bedplate and cylinder block without disturbing the bearing clearance or alignment of these components. The material cures slowly in the absence of air when torqued between two metallic surfaces, and will rapidly cure when heat is applied.

MOPAR® GASKET SEALANT is a slow drying, permanently soft sealer. This material is recommended for sealing threaded fittings and gaskets against leakage of oil and coolant. Can be used on threaded and machined parts under all temperatures. This material is used on engines with multi-layer steel (MLS) cylinder head gaskets. This material also will prevent corrosion. Mopar® Gasket Sealant is available in a 13 oz. aerosol can or 4oz./16 oz. can w/applicator.

SEALER APPLICATION

Mopar® Gasket Maker material should be applied sparingly 1 mm (0.040 in.) diameter or less of sealant to one gasket surface. Be certain the material surrounds each mounting hole. Excess material can easily be wiped off. Components should be torqued in place within 15 minutes. The use of a locating dowel is recommended during assembly to prevent smearing material off the location.

Mopar® Engine RTV GEN II or ATF RTV gasket material should be applied in a continuous bead approximately 3 mm (0.120 in.) in diameter. All mounting holes must be circled. For corner sealing, a 3.17 or 6.35 mm (1/8 or 1/4 in.) drop is placed in the center of the gasket contact area. Uncured sealant may be removed with a shop towel. Components should be torqued in place while the sealant is still wet to the touch (within 10 minutes). The usage of a locating dowel is recommended during assembly to prevent smearing material off the location.

Mopar® Gasket Sealant in an aerosol can should be applied using a thin, even coat sprayed completely over both surfaces to be joined, and both sides of a gasket. Then proceed with assembly. Material in a can w/applicator can be brushed on evenly over the sealing surfaces. Material in an aerosol can should be used on engines with multi-layer steel gaskets.

STANDARD PROCEDURE - ENGINE GASKET SURFACE PREPARATION

To ensure engine gasket sealing, proper surface preparation must be performed, especially with the use of aluminum engine components and multi-layer steel cylinder head gaskets.

Never use the following to clean gasket surfaces:

- Metal scraper
- Abrasive pad or paper to clean cylinder block and head
- High speed power tool with an abrasive pad or a wire brush (Fig. 2)

NOTE: Multi-Layer Steel (MLS) head gaskets require a scratch free sealing surface.

Only use the following for cleaning gasket surfaces:

- Solvent or a commercially available gasket remover
- Plastic or wood scraper (Fig. 2)
- Drill motor with 3M Roloc™ Bristle Disc (white or yellow) (Fig. 2)

CAUTION: Excessive pressure or high RPM (beyond the recommended speed), can damage the sealing surfaces. The mild (white, 120 grit) bristle disc is recommended. If necessary, the medium (yellow, 80 grit) bristle disc may be used on cast iron surfaces with care.

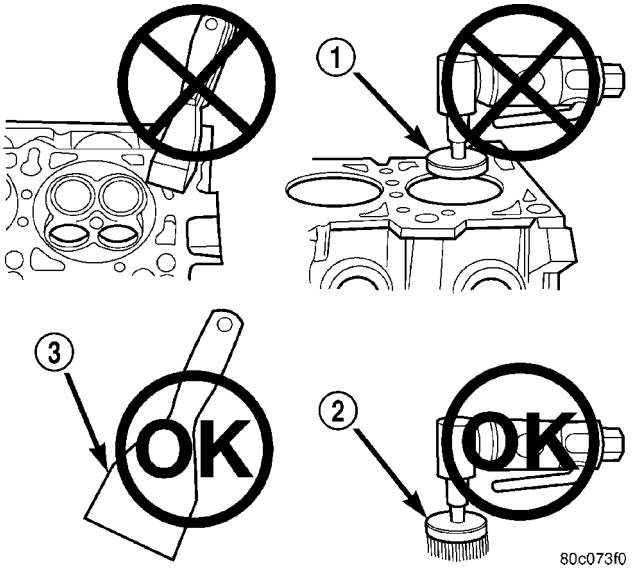

Fig. 2 Proper Tool Usage For Surface Preparation

1 - ABRASIVE PAD
2 - 3M ROLOC™ BRISTLE DISC
3 - PLASTIC/WOOD SCRAPER

ENGINE 2.4L DOHC (Continued)

STANDARD PROCEDURE - ENGINE CORE AND OIL GALLERY PLUGS

Using a blunt tool such as a drift and a hammer, strike the bottom edge of the cup plug. With the cup plug rotated, grasp firmly with pliers or other suitable tool and remove plug (Fig. 3).

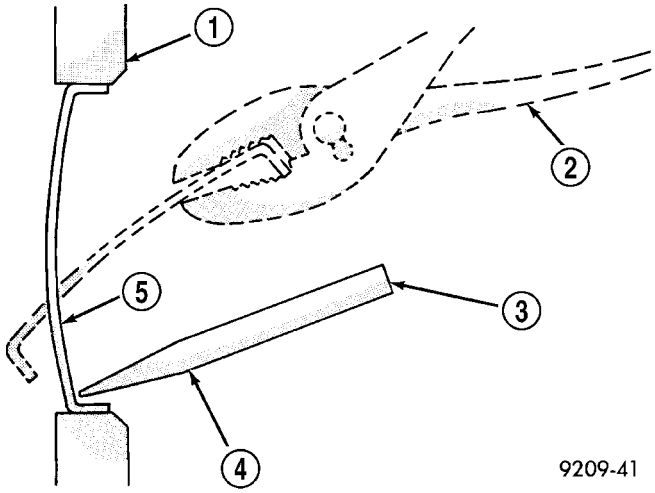

Fig. 3 Core Hole Plug Removal

1 - CYLINDER BLOCK
2 - REMOVE PLUG WITH PLIERS
3 - STRIKE HERE WITH HAMMER
4 - DRIFT PUNCH
5 - CUP PLUG

CAUTION: Do not drive cup plug into the casting as restricted cooling can result and cause serious engine problems.

Thoroughly clean inside of cup plug hole in cylinder block or head. Be sure to remove old sealer. Lightly coat inside of cup plug hole with Mopar® Stud and Bearing Mount. Make certain the new plug is cleaned of all oil or grease. Using proper drive plug, drive plug into hole so that the sharp edge of the plug is at least 0.5 mm (0.020 in.) inside the lead-in chamfer.

It is not necessary to wait for curing of the sealant. The cooling system can be refilled and the vehicle placed in service immediately.

STANDARD PROCEDURE - MEASURING BEARING CLEARANCE USING PLASTIGAGE

Engine crankshaft bearing clearances can be determined by use of Plastigage or equivalent. The following is the recommended procedure for the use of Plastigage:

(1) Remove oil film from surface to be checked. Plastigage is soluble in oil.

(2) Place a piece of Plastigage across the entire width of the bearing shell in the cap approximately 6.35 mm (1/4 in.) off center and away from the oil holes (Fig. 4). (In addition, suspected areas can be checked by placing the Plastigage in the suspected area). Torque the bearing cap bolts of the bearing being checked to the proper specifications.

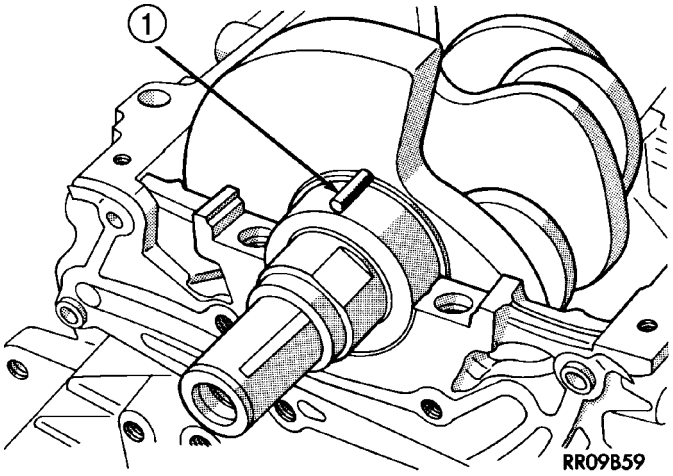

Fig. 4 Plastigage Placed in Lower Shell—Typical

1 - PLASTIGAGE

(3) Remove the bearing cap and compare the width of the flattened Plastigage with the metric scale provided on the package. Locate the band closest to the same width. This band shows the amount of clearance in thousandths of a millimeter. Differences in readings between the ends indicate the amount of taper present. Record all readings taken. Compare clearance measurements to specs found in engine specifications (Refer to 9 - ENGINE - SPECIFICATIONS). **Plastigage generally is accompanied by two scales. One scale is in inches, the other is a metric scale.**

NOTE: Plastigage is available in a variety of clearance ranges. Use the most appropriate range for the specifications you are checking.

(4) Install the proper crankshaft bearings to achieve the specified bearing clearances.

REMOVAL - ENGINE ASSEMBLY

(1) Perform fuel pressure release procedure, then disconnect and remove fuel line (Refer to 14 - FUEL SYSTEM/FUEL DELIVERY - STANDARD PROCEDURE).

(2) Remove air cleaner housing assembly and clean air hose (Refer to 9 - ENGINE/AIR INTAKE SYSTEM/AIR CLEANER HOUSING - REMOVAL).

(3) Disconnect both cables from battery.

(4) Remove battery and battery tray (Refer to 8 - ELECTRICAL/BATTERY SYSTEM/BATTERY - REMOVAL).

(5) Drain cooling system (Refer to 7 - COOLING/ENGINE - STANDARD PROCEDURE).

ENGINE 2.4L DOHC (Continued)

(6) Discharge air conditioning system, if equipped (Refer to 24 - HEATING & AIR CONDITIONING - STANDARD PROCEDURE).

(7) Disconnect throttle and speed control cables from throttle body.

(8) Disconnect engine wiring harness at Powertrain Control Module (PCM).

(9) Disconnect positive cable from Power Distribution Center (PDC) and ground wire from vehicle body. Remove bolts attaching PDC and set aside (Fig. 5).

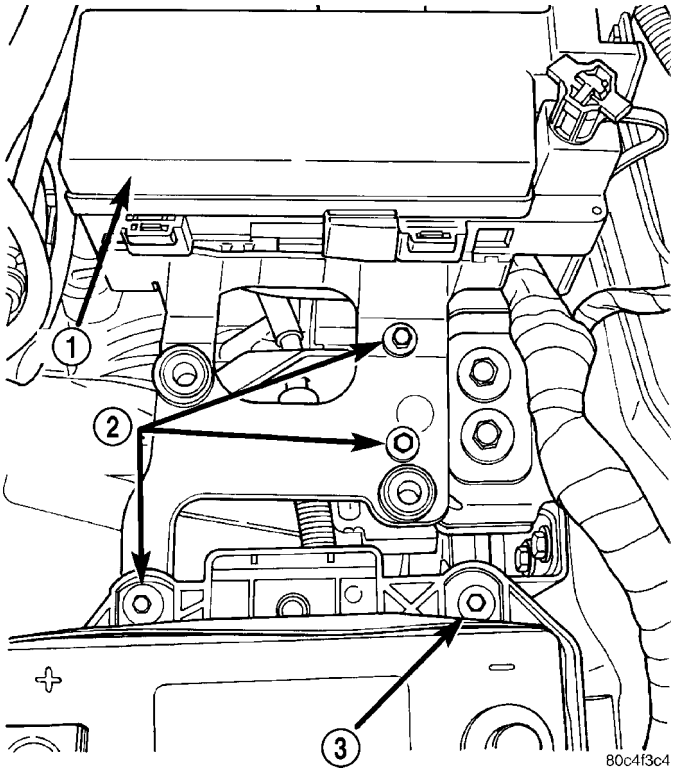

Fig. 5 PDC Bracket Attaching Bolts

1 - PDC
2 - PDC BRACKET BOLTS
3 - BATTERY TRAY BOLT

(10) Disconnect wiring connectors at lower battery tray support.

(11) Disconnect ground wire from the vehicle body-to-engine at the right side strut tower.

(12) Disconnect brake booster vacuum hose from intake manifold.

(13) Disconnect the proportional purge hose from throttle body.

(14) Disconnect coolant reserve/recovery hose from coolant outlet connector.

(15) Disconnect heater hoses.

(16) Remove grille (Refer to 23 - BODY/EXTERIOR/GRILLE - REMOVAL).

(17) Remove upper radiator closure panel and center brace(Refer to 23 - BODY/EXTERIOR/RADIATOR CLOSURE PANEL - REMOVAL) (Fig. 6).

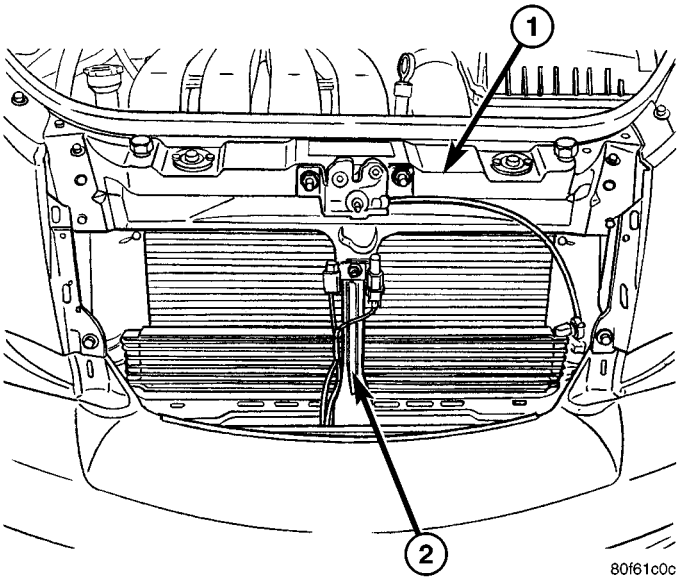

Fig. 6 Upper Radiator Closure Panel and Center Brace

1 - UPPER RADIATOR CLOSURE PANEL
2 - CENTER BRACE

(18) Remove upper radiator hose.

(19) Remove lower radiator hose.

(20) Disconnect upper A/C line from A/C condenser.

(21) Disconnect A/C lines at junction near upper torque strut.

(22) **Automatic Transmission equipped vehicles:**

(a) Using a blade or suitable hose cutter, cut transaxle oil cooler lines off flush with transmission fittings. Plug lines and fittings to prevent debris from entering transaxle or cooler circuit. A service splice kit will be installed upon reassembly.

(b) Disconnect transmission electrical connectors.

(c) Disconnect transmission shift linkage.

(23) **Manual Transmission equipped vehicles:**

(a) Using Special Tool 6638A, disconnect clutch hydraulic line (Fig. 7) and (Fig. 8).

(b) Disconnect transmission shift linkage.

(c) Disconnect transmission electrical connectors.

(24) **Turbocharger equipped vehicles:** Disconnect power steering hoses from radiator.

(25) Disconnect radiator fan electrical connector and remove cooling module assembly (fan, radiator, A/C condenser, transmission oil cooler).

(26) Hoist vehicle and remove front wheels.

(27) Remove right inner splash shield.

(28) Remove axle shafts (Refer to 3 - DIFFERENTIAL & DRIVELINE/HALF SHAFT - REMOVAL).

(29) Remove accessory drive belts (Refer to 7 - COOLING/ACCESSORY DRIVE/DRIVE BELTS - REMOVAL).

ENGINE 2.4L DOHC (Continued)

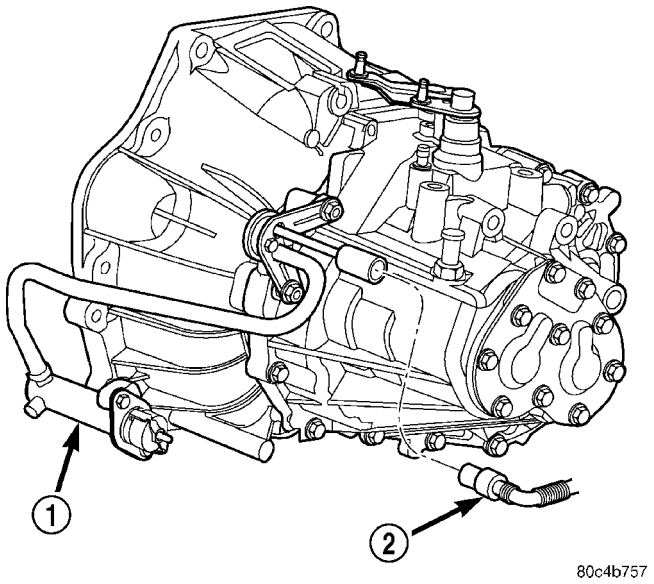

Fig. 7 Clutch Hydraulic Line to Slave Cylinder— (Manual Transaxle Equipped)

1 - SLAVE CYLINDER
2 - HYDRAULIC TUBE

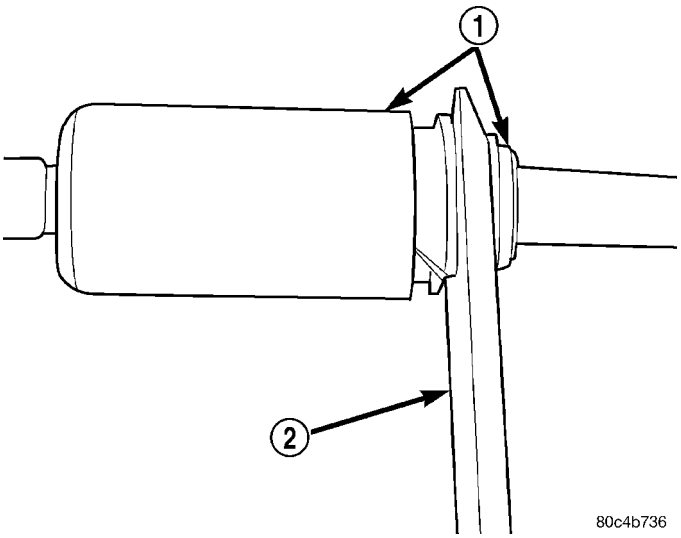

Fig. 8 Disconnecting Clutch Hydraulic Line— (Manual Transaxle Equipped)

1 - QUICK CONNECT FITTING
2 - TOOL 6638A

(30) Remove generator and support brackets.

(31) **Turbocharger equipped vehicles:** Remove charge air cooler hoses (Fig. 9).

(32) Drain engine oil.

(33) Disconnect the downstream oxygen sensor connector.

(34) Disconnect exhaust system from manifold (Fig. 10) or (Fig. 11).

(35) **Non-Turbo equipped vehicles:** Disconnect power steering pressure hose from steering gear (Fig. 12).

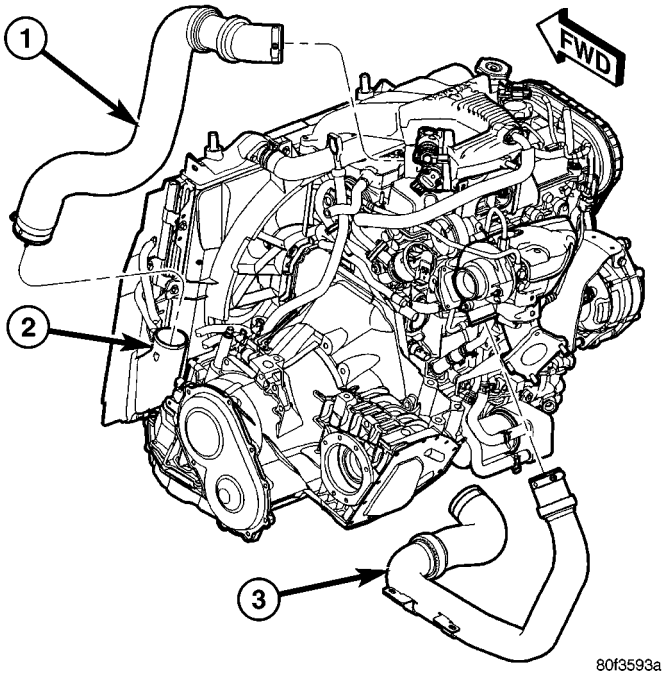

Fig. 9 Charge Air Cooler Hoses

1 - HOSE - CHARGE AIR COOLER TO THROTTLE BODY
2 - CHARGE AIR COOLER
3 - HOSE - TURBOCHARGER TO CHARGE AIR COOLER

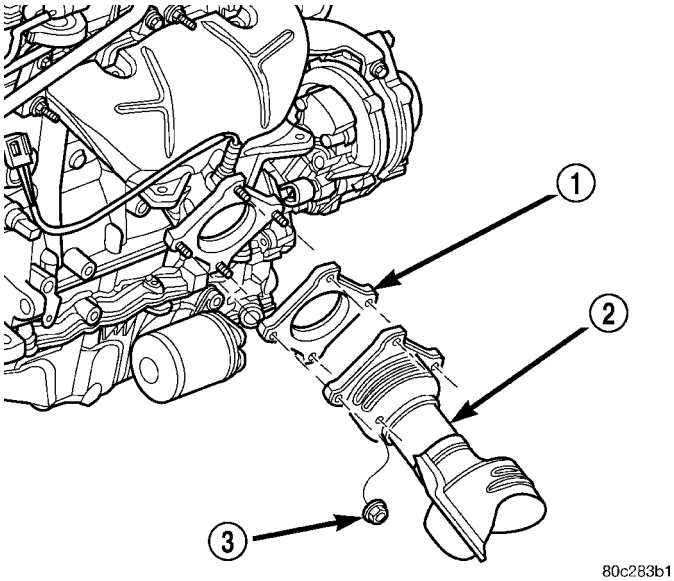

Fig. 10 Exhaust System To Manifold Connection

1 - GASKET
2 - CATALYTIC CONVERTER
3 - NUT

(36) **Turbocharger equipped vehicles:** Disconnect both power steering hoses from steering gear (Fig. 13).

(37) **Turbocharger equipped vehicles:** Remove upper and lower heat sheilds, elbow support bracket, turbocharger support bracket, and elbow (Fig. 14).

ENGINE 2.4L DOHC (Continued)

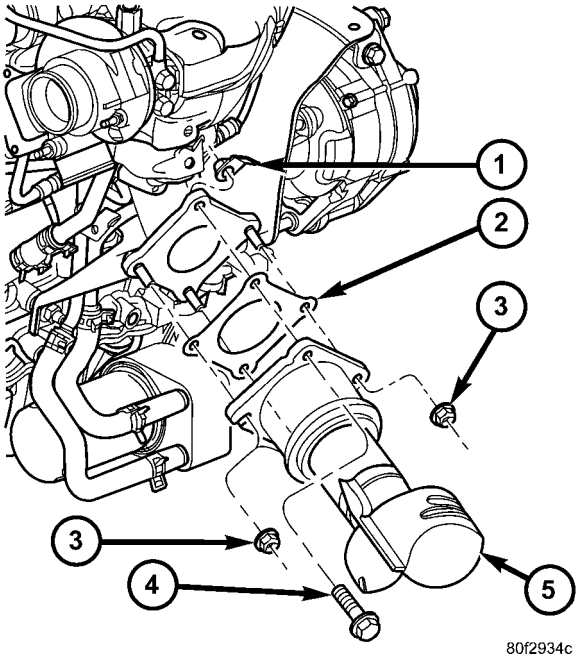

Fig. 11 Converter to Exhaust Manifold Connection - 2.4L Turbo

1 - FLAG NUT
2 - GASKET
3 - NUT
4 - BOLT
5 - CATALYTIC CONVERTER

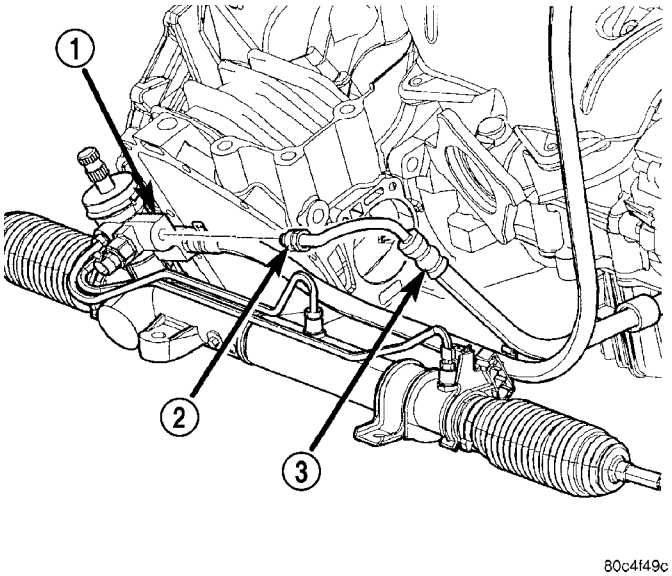

Fig. 12 Power Steering Fluid Pressure Hose

1 - STEERING GEAR
2 - FITTING
3 - POWER STEERING PRESSURE HOSE

(38) Remove structural collar (Refer to 9 - ENGINE/ENGINE BLOCK/STRUCTURAL COLLAR - REMOVAL).

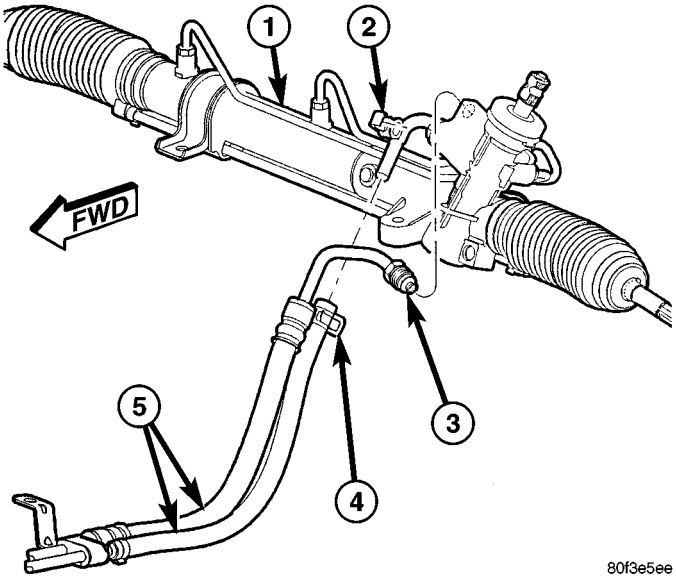

Fig. 13 Hoses At Power Steering Gear - 2.4L Turbo

1 - POWER STEERING GEAR
2 - ROUTING CLIP
3 - PRESSURE HOSE TUBE NUT
4 - RETURN HOSE CLAMP
5 - PRESSURE/RETURN HOSE ASSEMBLY

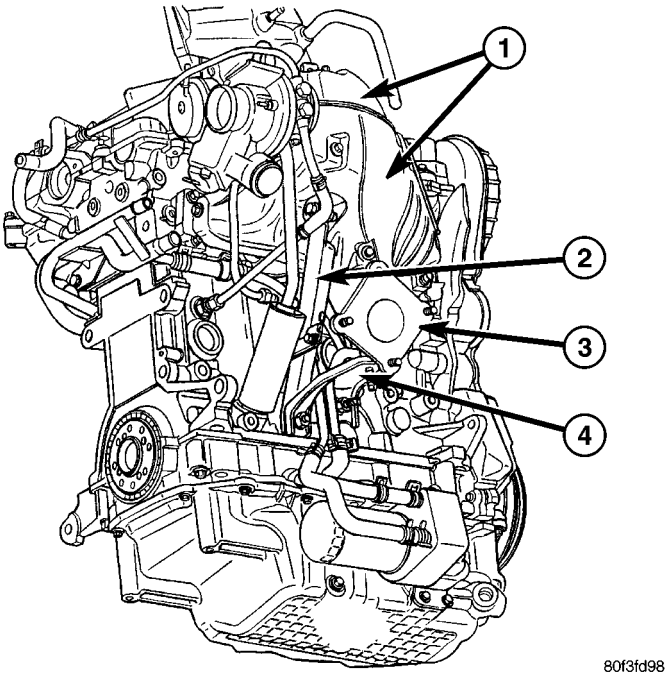

Fig. 14 Turbocharger Brackets and Heat Shields

1 - UPPER/LOWER HEAT SHIELDS
2 - TURBOCHARGER SUPPORT BRACKET
3 - ELBOW
4 - ELBOW SUPPORT BRACKET

(39) **Automatic Transmission equipped vehicles:**

(a) Remove torque converter bolts and mark converter to flex plate orientation for reassembly.

ENGINE 2.4L DOHC (Continued)

(40) **Manual Transmission equipped vehicles:**
(a) Remove drive plate to clutch module bolts.

(41) Remove lower engine torque strut (Refer to 9 - ENGINE/ENGINE MOUNTING/TORQUE STRUT - REMOVAL).

(42) Lower vehicle and remove A/C compressor.

(43) Disconnect power steering lines from power steering pump.

(44) Remove power steering pump.

(45) Raise vehicle enough to allow engine dolly, cradle, and posts, (Special Tools 6135, 6710, and 6848) to be installed under vehicle. For Special Tool identification (Refer to 9 - ENGINE - SPECIAL TOOLS).

(46) Loosen engine support posts to allow movement for positioning onto engine locating holes and flange on the engine bedplate. Lower vehicle and position cradle until the engine is resting on support posts (Fig. 17). Tighten mounts to cradle frame. This will keep support posts from moving when removing or installing engine and transmission.

(47) Install safety straps around the engine to cradle (Fig. 17). Tighten straps and lock them into position.

WARNING: Safety straps MUST be used.

(48) Raise vehicle enough to determine if straps are secure enough to hold cradle assembly to engine.

(49) Lower vehicle so weight of the engine and transmission ONLY is on the cradle assembly.

(50) Remove the upper engine torque strut.

(51) Remove right mount through bolt (Fig. 15) and left mount attaching bolts (Fig. 16).

(52) Raise vehicle slowly until engine/transaxle assembly clears engine compartment. It may be necessary to move the engine/transmission assembly with the cradle to allow for removal around body flanges.

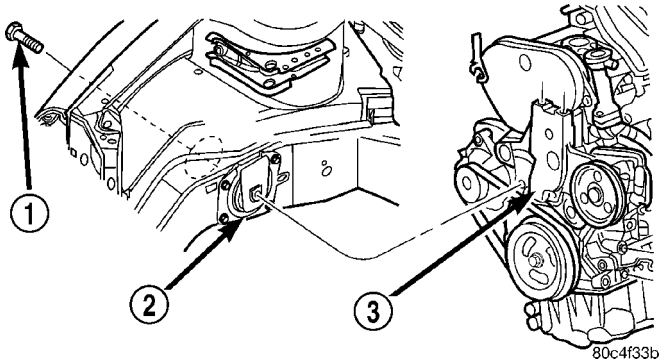

Fig. 15 Right Mount Through Bolt

1 - BOLT
2 - RIGHT ENGINE MOUNT
3 - ENGINE MOUNT BRACKET

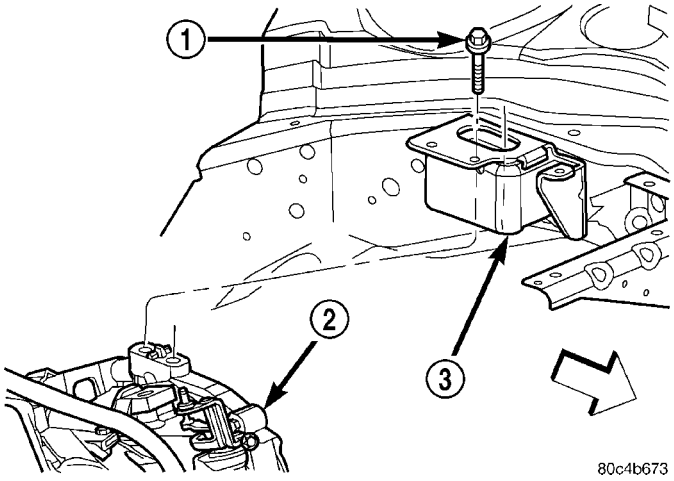

Fig. 16 Left Mount Bolts

1 - BOLT
2 - TRANSAXLE
3 - LEFT MOUNT

INSTALLATION - ENGINE ASSEMBLY

(1) Position engine and transmission assembly under vehicle and slowly lower the vehicle over the engine/transaxle assembly.

(2) Continue lowering vehicle until engine/transaxle aligns to mounting locations. Install mounting bolts at the right and left engine/transaxle mounts (Fig. 15) and (Fig. 16). Tighten bolts to 118 N·m (87 ft. lbs.).

(3) Install upper engine torque strut.

(4) Remove safety straps from engine/transaxle assembly. Slowly raise vehicle enough to remove the engine dolly and cradle.

(5) Install power steering pump.

(6) Connect power steering lines to power steering pump.

(7) Install A/C compressor.

(8) Install lower engine torque strut (Refer to 9 - ENGINE/ENGINE MOUNTING/TORQUE STRUT - INSTALLATION).

(9) **Automatic Transmission equipped vehicles:**
(a) Install torque converter bolts.

(10) **Manual Transmission equipped vehicles:**
(a) Install drive plate to clutch module bolts.

(11) Install structural collar (Refer to 9 - ENGINE/ENGINE BLOCK/STRUCTURAL COLLAR - INSTALLATION).

(12) **Turbocharger equipped vehicles:** Install elbow, turbocharger support bracket, elbow support bracket, and upper and lower heat shields (Fig. 14).

(13) **Non-Turbo equipped vehicles:** Connect power steering pressure hose to steering gear (Fig. 12).

(14) **Turbocharger equipped vehicles:** Connect both power steering hoses to steering gear (Fig. 13).

ENGINE 2.4L DOHC (Continued)

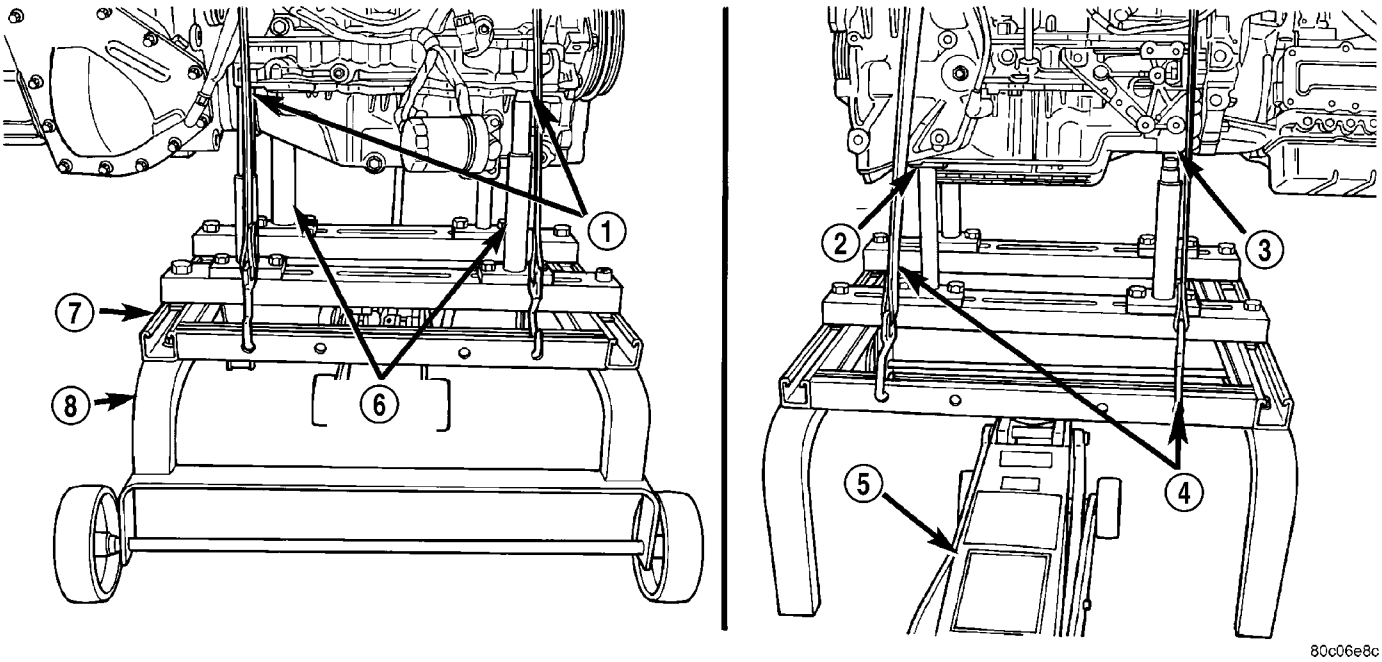

Fig. 17 Positioning Engine Cradle Support Post

1 - POST LOCATING HOLES IN BLOCK
2 - POST POSITIONED UNDER BRACKET
3 - POST LOCATING HOLE IN STRUT
4 - SAFETY STRAPS
5 - FLOOR JACK
6 - SPECIAL TOOL 6848
7 - SPECIAL TOOL 6135
8 - SPECIAL TOOL 6710

(15) Connect exhaust system to manifold (Fig. 10) or (Fig. 11).

(16) Connect the downstream oxygen sensor.

(17) **Turbocharger equipped vehicles:** Install charge air cooler hoses (Fig. 9).

(18) Install generator and mounting brackets.

(19) Install accessory drive belts (Refer to 7 - COOLING/ACCESSORY DRIVE/DRIVE BELTS - INSTALLATION).

(20) Install axle shafts (Refer to 3 - DIFFERENTIAL & DRIVELINE/HALF SHAFT - INSTALLATION).

(21) Install right inner splash shield.

(22) Install wheels and lower vehicle.

(23) Install cooling module assembly (fan, radiator, A/C condenser, transmission oil cooler). Connect radiator fan electrical connector.

(24) **Turbocharger equipped vehicles:** Connect power steering hoses to radiator.

(25) **Manual Transmission equipped vehicles:**

(a) Connect clutch hydraulic line (Fig. 7).

(b) Connect transmission shift linkage.

(c) Connect transmission electrical connectors.

NOTE: It is not necessary to bleed the clutch hydraulic system. The quick-connect fittings close immediately after disconnection; allowing no fluid to escape.

(26) **Automatic Transmission equipped vehicles:**

(a) Connect transmission oil cooler lines using service splice kit. Refer to instructions provided with kit.

(b) Connect transmission electrical connectors.

(c) Connect transmission shift linkage.

(27) Connect A/C lines at junction near upper torque strut.

(28) Connect upper A/C line to A/C condenser.

(29) Install upper and lower radiator hoses.

(30) Install upper radiator closure panel and center brace (Refer to 23 - BODY/EXTERIOR/RADIATOR CLOSURE PANEL - INSTALLATION) (Fig. 6).

(31) Install grille (Refer to 23 - BODY/EXTERIOR/GRILLE - INSTALLATION).

(32) Connect fuel line and heater hoses.

(33) Connect coolant reserve/recovery hose to coolant outlet connector.

(34) Connect brake booster vacuum hose to intake manifold.

(35) Connect the proportional purge hose to throttle body.

(36) Install all ground straps and connect engine wiring harness.

(37) Position PDC and install bolts (Fig. 5). Connect positive battery cable to PDC and ground wire to vehicle body.

ENGINE 2.4L DOHC (Continued)

(38) Connect engine wiring harness at Powertrain Control Module (PCM).
(39) Connect throttle and speed control cables.
(40) Install battery tray and battery (Refer to 8 - ELECTRICAL/BATTERY SYSTEM/BATTERY - INSTALLATION).
(41) Connect cables to battery.
(42) Install air cleaner housing assembly and connect clean air hose (Refer to 9 - ENGINE/AIR INTAKE SYSTEM/AIR CLEANER HOUSING - INSTALLATION).
(43) Install oil filter. Fill engine crankcase with proper oil to correct level.
(44) Fill power steering system.
(45) Fill cooling system (Refer to 7 - COOLING/ ENGINE - STANDARD PROCEDURE).
(46) Evacuate and recharge A/C system (Refer to 24 - HEATING & AIR CONDITIONING - STANDARD PROCEDURE).
(47) Start engine and run until operating temperature is reached.
(48) Perform torque strut adjustment procedure (Refer to 9 - ENGINE/ENGINE MOUNTING/ TORQUE STRUT - ADJUSTMENTS).
(49) Adjust transmission linkage, if necessary.

SPECIFICATIONS

2.4L ENGINE

DESCRIPTION	SPECIFICATION
General Specification	
Type	In-Line OHV, DOHC
Number of Cylinders	4
Displacement	2.4 Liters (148 cu. in.)
Bore	87.5 mm (3.445 in.)
Stroke	101.0 mm (3.976 in.)
Compression Ratio	
Non-Turbo	9.5:1
Turbo	8.1:1
Firing Order	1-3-4-2
Compression Pressure	1172–1551 kPa (170–225 psi)
Max. Variation Between Cylinders	25%

DESCRIPTION	SPECIFICATION
Cylinder Block	
Cylinder Bore Diameter	87.4924–87.5076 mm (3.4446–3.4452 in.)
Out-of-Round (Max.)	0.051 mm (0.002 in.)
Taper (Max.)	0.051 mm (0.002 in.)
Pistons	
Piston Diameter	87.463–87.481 mm (3.4434–3.4441 in.)
Clearance @ 14 mm (0.551 in.) from bottom of skirt (Non-Turbo)	0.024–0.057 mm (0.0009–0.0022 in.)
Clearance @ 22 mm (0.866 in.) from bottom of skirt (Turbo)	0.024–0.057 mm (0.0009–0.0022 in.)
Weight	346–356 grams (12.20–12.56 oz.)
Land Clearance (Diametrical)	0.614–0.664 mm (0.024–0.026 in.)
Piston Length	
Non-Turbo	66.25 mm (2.608 in.)
Turbo	61.43 mm (2.419 in.)
Piston Ring Groove Depth No. 1	4.640–4.784 mm (0.182–0.188 in.)
Piston Ring Groove Depth No. 2	4.575–4.719 mm (0.180–0.185 in.)
Piston Ring Groove Depth No. 3	4.097–4.236 mm (0.161–0.166 in.)
Piston Pins	
Clearance in Piston	0.005–0.018 mm (0.0002–0.0008 in.)
Clearance in Connecting Rod	Interference
Diameter	21.998–22.003 mm (0.8660–0.8662 in.)
End Play	None
Length	72.75–73.25 mm (2.864–2.883 in.)

ENGINE 2.4L DOHC (Continued)

DESCRIPTION	SPECIFICATION
Piston Rings	
Ring Gap—Top Compression Ring	0.25–0.51 mm (0.0098–0.020 in.)
Wear Limit	0.8 mm (0.031 in.)
Ring Gap—2nd Compression Ring	0.23–0.48 mm (0.009–0.018 in.)
Wear Limit	0.8 mm (0.031 in.)
Ring Gap—Oil Control Steel Rails	0.25–0.64 mm (0.0098–0.025 in.)
Wear Limit	1.0 mm (0.039 in.)
Ring Side Clearance—Compression Rings	0.030–0.080 mm (0.0011–0.0031 in.)
Wear Limit	0.10 mm (0.004 in.)
Ring Side Clearance—Oil Ring Pack	0.012–0.178 mm (0.0004–0.0070 in.)
Ring Width—Compression Rings	1.47–1.50 mm (0.057–0.059 in.)
Ring Width—Oil Ring Pack	2.72–2.88 mm (0.107–0.1133 in.)
Connecting Rod	
Bearing Clearance	0.025–0.071 mm (0.0009–0.0027 in.)
Wear Limit	0.075 mm (0.003 in.)
Bore Diameter—Piston Pin	20.96–20.98 mm (0.8252–0.8260 in.)
Bore Diameter—Crankshaft End	53.007–52.993 mm (2.0868–2.0863 in.)
Side Clearance	0.13–0.38 mm (0.005–0.015 in.)
Wear Limit	0.40 mm (0.016 in.)
Weight—Total (Less Bearing)	565.8 grams (19.96 oz.)

DESCRIPTION	SPECIFICATION
Crankshaft	
Connecting Rod Journal Diameter	49.984–50.000 mm (1.968–1.9685 in.)
Main Bearing Journal Diameter	59.992–60.008 mm (2.362–2.3625 in.)
Journal Out-of-Round (Max.)	0.0035 mm (0.0003 in.)
Journal Taper (Max.)	0.007 mm (0.0001 in.)
End Play	0.09–0.27 mm (0.0035–0.0106 in.)
Wear Limit	0.38 mm (0.015 in.)
Main Bearing Diametrical Clearance	0.018–0.062 mm (0.0007–0.0024 in.)
Hydraulic Lash Adjuster	
Body Diameter	15.901–15.913 mm (0.626–0.6264 in.)
Plunger Travel Minimum (Dry)	3.0 mm (0.118 in.)
Cylinder Head Camshaft Bearing Bore Diameter	
Journals No.1–6	26.020–26.041 mm (1.024–1.025 in.)
Camshaft	
Journal Diameter No. 1–6	25.951–25.970 mm (1.021–1.022 in.)
Bearing Clearance—Diametrical	0.069–0.071 mm (0.0027–0.003 in.)
End Play	0.05–0.17 mm (0.0019–0.0066 in.)
Lift (Zero Lash)	
Intake	8.25 mm (0.324 in.)
Exhaust	6.60 mm (0.259 in.)
Intake Valve Timing*	
Closes (ABDC)	44.3°
Opens (ATDC)	6.2°
Duration	218°
Exhaust Valve Timing*	
Closes (ATDC)	1°

ENGINE 2.4L DOHC (Continued)

DESCRIPTION	SPECIFICATION
Opens (BBDC)	40°
Duration	221°
Valve Overlap	5.4°
*All readings in crankshaft degrees, at 0.5 mm (0.019 in.) of valve lift.	
Cylinder Head	
Material	Cast Aluminum
Gasket Thickness (Compressed)	0.71 mm (0.028 in.)
Valve Seat	
Angle	44.5–45°
Seat Diameter—Intake	34.37–34.63 mm (1.353–1.363 in.)
Seat Diameter—Exhaust	27.06–27.32 mm (1.065–1.075 in.)
Runout (Max.)	0.05 mm (0.002 in.)
Valve Seat Width—Intake and Exhaust	0.9–1.3 mm (0.035–0.051 in.)
Service Limit—Intake	2.0 mm (0.079 in.)
Service Limit—Exhaust	2.5 mm (0.098 in.)
Valve Guide	
Diameter I.D.	5.975–6.000 mm (0.235–0.236 in.)
Guide Bore Diameter	11.0–11.02 mm (0.4330–0.4338 in.)
Guide Height (spring seat to guide tip)	13.25–13.75 mm (0.521–0.541 in.)
Valves	
Face Angle—Intake and Exhaust	44.5—45°
Head Diameter—Intake	34.67–34.93 mm 1.364–1.375 in.)
Head Diameter—Exhaust	28.32–28.52 mm (1.114–1.122 in.)
Valve Length (Overall)	
—Intake	112.76–113.32 mm (4.439–4.461 in.)
—Exhaust	110.89–111.69 mm (4.365–4.397 in.)

DESCRIPTION	SPECIFICATION
Valve Stem Diameter	
—Intake	5.934–5.952 mm (0.2337–0.2344 in.)
—Exhaust	5.906–5.924 mm (0.2326–0.2333 in.)
Valve Margin	
Intake	1.2–1.7 mm (0.047–0.066 in.)
Service Limit	0.95 mm (1/32 in.)
Exhaust	0.985–1.315 mm (0.038–0.051 in.)
Service Limit	1.05 mm (3/64 in.)
Valve Stem Tip Height	
Intake	48.04 mm (1.891 in.)
Exhaust	47.99 mm (1.889 in.)
Valve Stem to Guide Clearance	
Intake	0.048–0.066 mm (0.0018–0.0025 in.)
Max. Allowable	0.076 mm (0.003 in.)
Service Limit	0.25 mm (0.010 in.)
Exhaust	0.0736–0.094 mm (0.0029–0.0037 in.)
Max. Allowable	0.101 mm (0.004 in.)
Service Limit	0.25 mm (0.010 in.)
Valve Springs	
Free Length (Approx.)	48.4 mm (1.905 in.)
Nominal Force (Valve Closed)	338 N @ 38.0 mm (75.98 lbs. @ 1.496 in.)
Nominal Force (Valve Open)	607 N @ 29.75 mm (136 lbs. @ 1.172 in.)
Installed Height	38.00 mm (1.496 in.)

ENGINE 2.4L DOHC (Continued)

DESCRIPTION	SPECIFICATION
Number of Coils	7.82
Wire Diameter	3.86 mm (1.496 in.)
Oil Pump	
Clearance Over Rotors (Max.)	0.10 mm (0.004 in.)
Cover Out-of-Flat (Max.)	0.025 mm (0.001 in.)
Inner Rotor Thickness (Min.)	10.699 mm (0.421 in.)
Outer Rotor Thickness (Min.)	10.699 mm (0.421 in.)
Outer Rotor Clearance (Max.)	0.039 mm (0.015 in.)
Outer Rotor Diameter (Min.)	85.924 mm (3.383 in.)
Tip Clearance Between Rotors (Max.)	0.20 mm (0.008 in.)
Oil Pressure	
At Curb Idle Speed*	25 kPa (4 psi)
At 3000 rpm	170–550 kPa (25–80 psi)
CAUTION: *If pressure is ZERO at curb idle, DO NOT run engine at 3000 rpm.	

TORQUE

DESCRIPTION	N·m	Ft. Lbs.	In. Lbs.
Balance Shaft Carrier to Block—Bolts	54	40	—
Balance Shaft Gear Cover—Double Ended Fastener	12	—	105
Balance Shaft Sprocket—Bolt	28	—	250
Balance Shaft Chain Tensioner—Bolts	12	—	105
Balance Shaft Carrier Cover—Bolts	12	—	105
Camshaft Sprocket—Bolt	115	85	—
Connecting Rod Cap—Bolts	27 +¼ turn	20 +¼ turn	—
Crankshaft Main Bearing Cap/Bedplate			
—M8 Bolts	28	—	250
—M11 Bolts	75	55	—
Crankshaft Damper—Bolt	136	100	—
Cylinder Head—Bolts	Refer to Procedure		
Cylinder Head Cover—Bolts	12	—	105
Flex Plate to Crankshaft—Bolts	95	70	—
Engine Support Bracket—Bolts	61	45	—
Exhaust Manifold—Bolts	23	—	200
Exhaust Manifold Heat Shield—Bolts	12	—	105
Intake Manifold Upper—Bolts	12	—	105
Intake Manifold Lower—Bolts	12	—	105
Intake Manifold Upper—Bolts (Turbo)	28	—	250
Intake Manifold Lower—Bolts (Turbo)	28	—	250
Oil Cooler Connector Bolt (Turbo)	55	41	—
Oil Filter	14	10	—
Oil Filter Adapter—Bolts	12	—	105
Oil Jet Fastener (Turbo)	12	—	105
Oil Pan—Bolts	12	—	105
Oil Pan Drain—Plug	28	20	—
Oil Pump to Block—Bolts	28	20	—
Oil Pump Cover Plate—Bolts	13	—	118
Oil Pump Pick-up Tube—Bolt	23	—	200
PCV Valve	8	—	70
Spark Plugs	18	13	—

ENGINE 2.4L DOHC (Continued)

DESCRIPTION	N·m	Ft. Lbs.	In. Lbs.
Timing Belt Cover - Front Upper and Lower—Bolts	6	—	50
Timing Belt Cover - Rear			
—M6 Bolts	12	—	105
—M8 Bolts	28	—	250
Timing Belt Idler Pulley	61	45	—
Timing Belt Tensioner Lock Bolt	25	—	220
Timing Belt Tensioner Assembly—Bolts	61	45	—

SPECIAL TOOLS

2.4L ENGINE

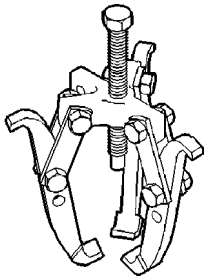

Puller 1026

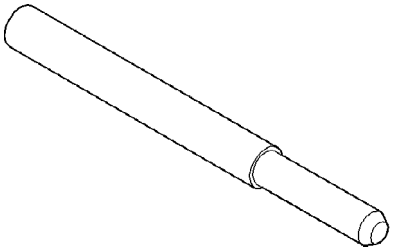

Crankshaft Damper Removal Insert 6827A

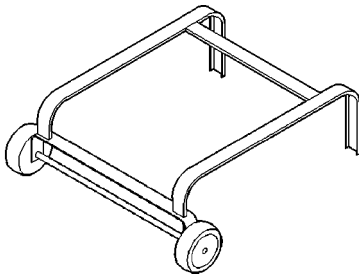

Dolly 6135

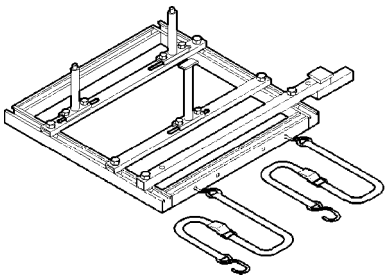

Cradle 6710

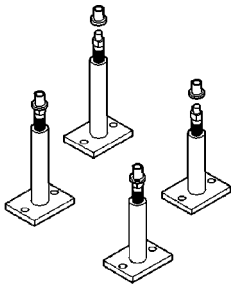

Post Kit Engine Cradle 6848

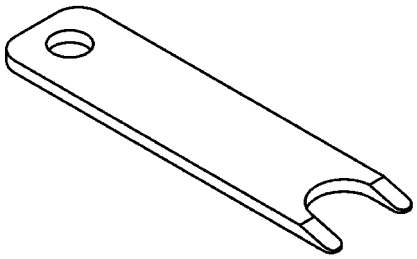

Clutch Line Disconnect 6638A

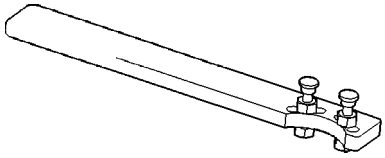

Camshaft Sprocket Holder 6847

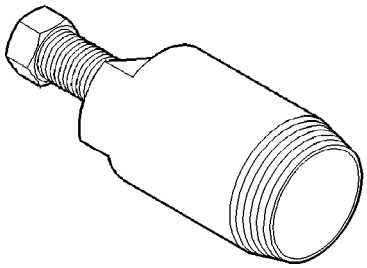

Camshaft Seal Remover C-4679-A

ENGINE 2.4L DOHC (Continued)

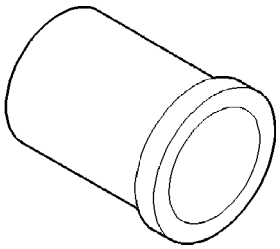

Camshaft Seal Installer MD-998306

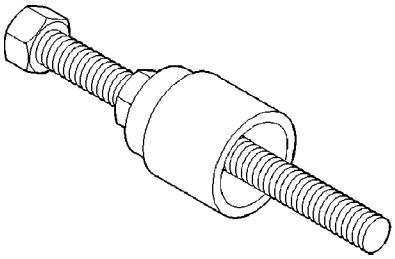

Crankshaft Damper/Sprocket Installer 6792

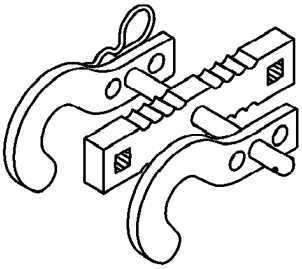

Valve Spring Compressor 8215-A

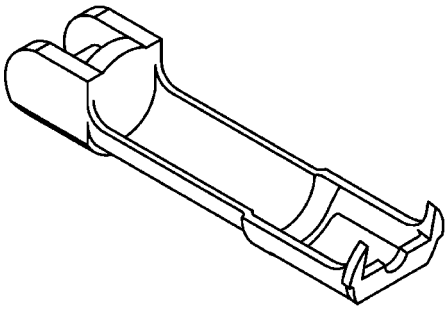

Adaptor 8436

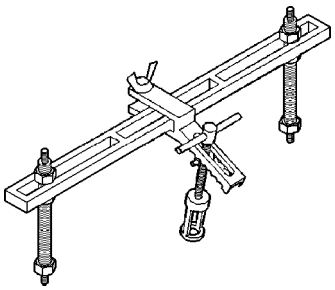

Valve Spring Compressor MD-998772-A

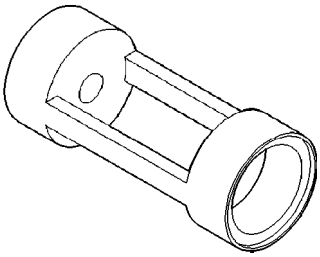

Valve Spring Compressor Adapter 6779

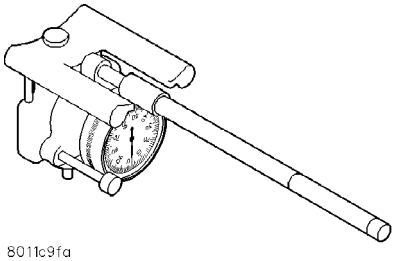

Cylinder Bore Gage C-119

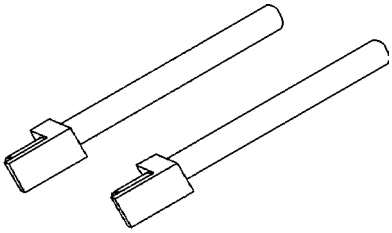

Connecting Rod Guides 8189

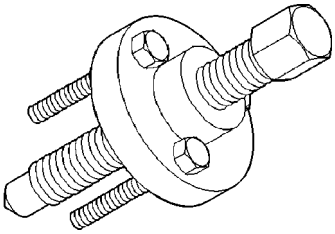

Crankshaft Sprocket Remover 6793

ENGINE 2.4L DOHC (Continued)

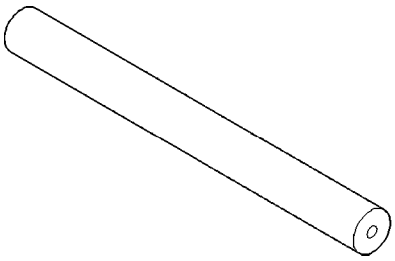

Crankshaft Sprocket Remover Insert C-4685-C2

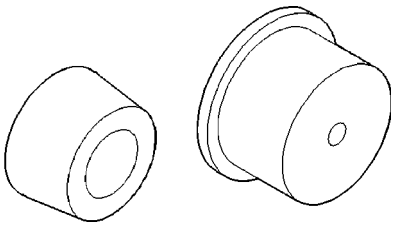

Rear Crankshaft Seal Guide and Installer 6926-1 and 6926-2

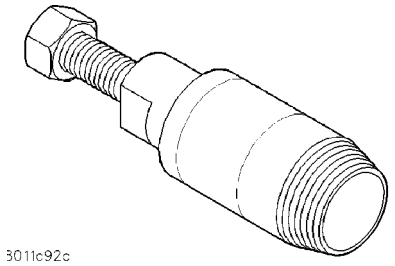

Crankshaft Front Seal Remover 6771

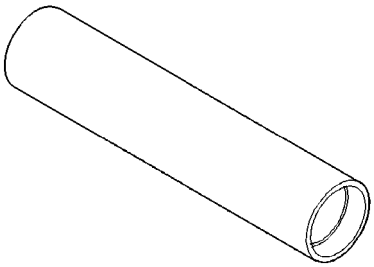

Balance Shaft Sprocket Installer 6052

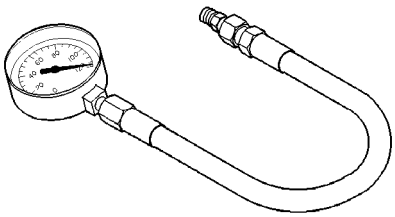

Oil Pressure Gage C-3292

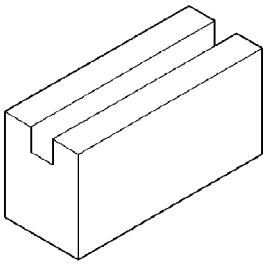

Post Adapter 8130

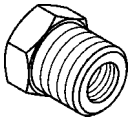

Adaptor 8406

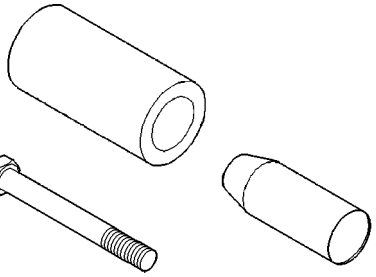

Front Crankshaft Oil Seal Installer 6780

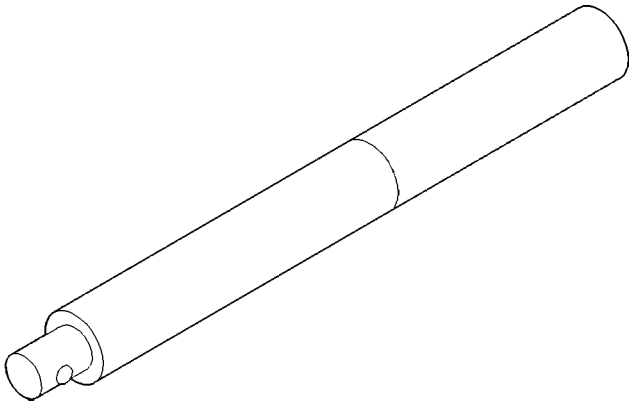

Driver Handle C-4171

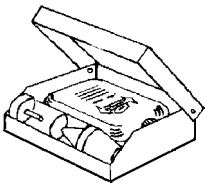

Combustion Leak Tester C-3685-A

ENGINE 2.4L DOHC (Continued)

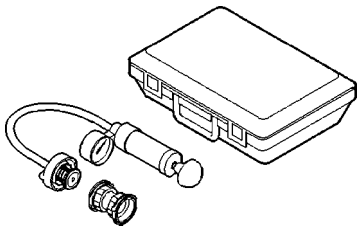

Cooling System Tester 7700

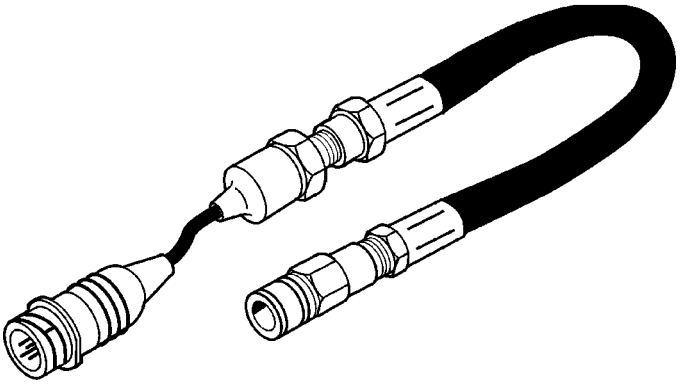

Pressure Transducer CH7059

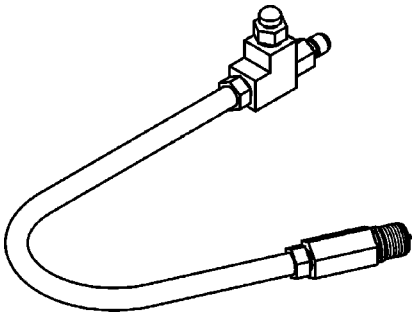

Cylinder Compression Pressure Adaptor 8116

DRB III® with PEP Module OT-CH6010A

AIR CLEANER ELEMENT

REMOVAL

(1) Unfasten clasps on sides of air cleaner housing cover. Lift cover off air cleaner housing (Fig. 18) .

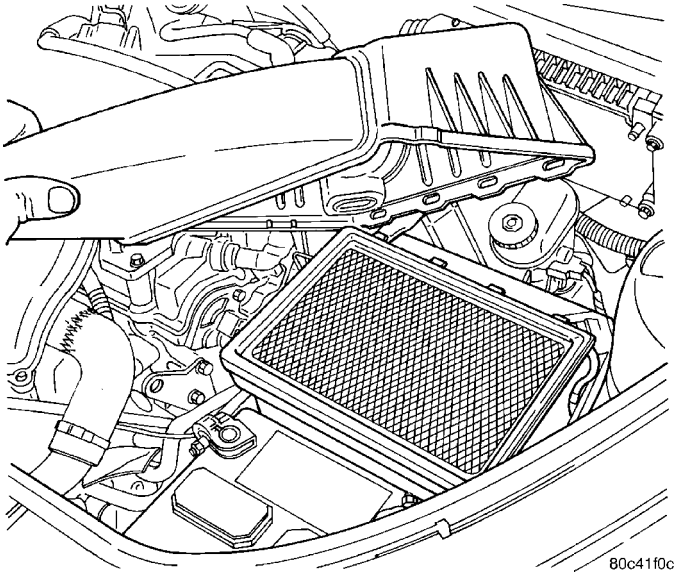

Fig. 18 Air Cleaner Cover

(2) Remove filter element.

(3) If necessary, clean the inside of the air cleaner housing.

INSTALLATION

(1) Install new filter element.

(2) Place cover over air cleaner housing. Snap clasps in place.

AIR CLEANER HOUSING

REMOVAL

(1) Disconnect the throttle body air inlet hose/ clean air hose from the air cleaner housing (Fig. 19) or (Fig. 20) and (Fig. 21).

(2) Pull air cleaner housing straight up to remove.

(3) Remove the inlet duct from the air cleaner housing.

INSTALLATION

(1) Install inlet duct to the air cleaner housing.

(2) Make sure the rubber grommets, for the air cleaner housing lower pins, are in place when reinstalling the air cleaner housing. The rubber grommets mount to the PDC bracket (Fig. 19) or (Fig. 20).

(3) Push air cleaner housing down while aligning pins into the grommets.

AIR CLEANER HOUSING (Continued)

(4) Connect the throttle body air inlet hose/clean air hose to the air cleaner housing (Fig. 19) or (Fig. 20) and (Fig. 21).

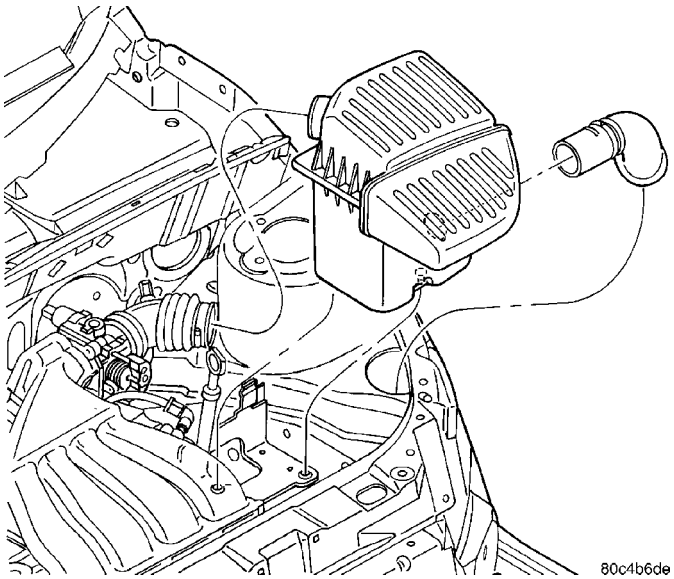

Fig. 19 Air Inlet System

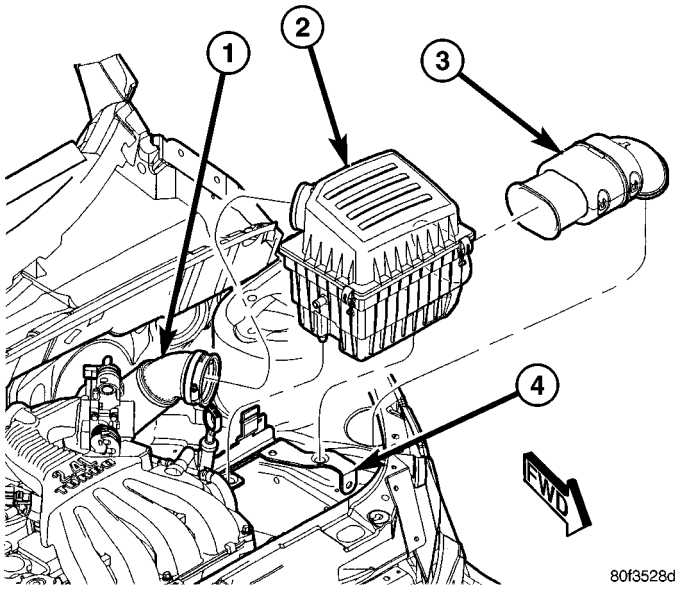

Fig. 20 Air Inlet System - 2.4L Turbo

1 - CLEAN AIR HOSE
2 - AIR CLEANER HOUSING
3 - FRESH AIR INLET DUCT
4 - PDC MOUNTING BRACKET

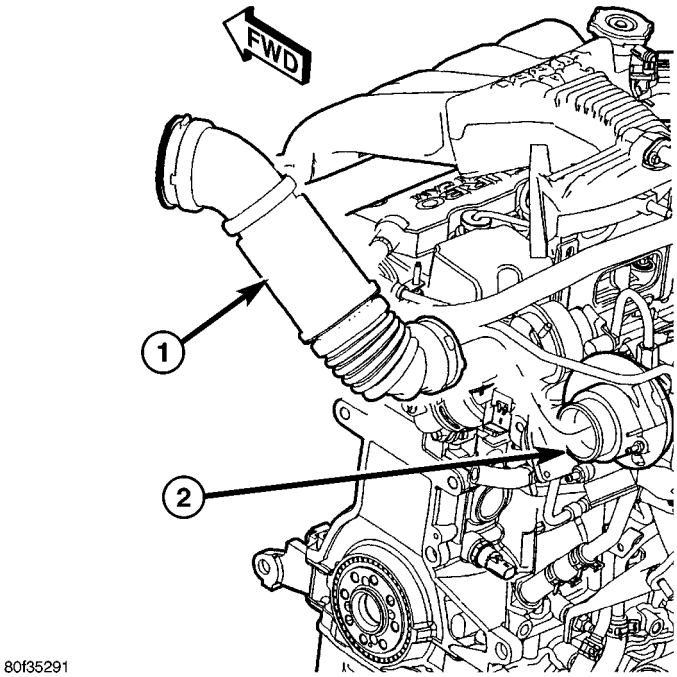

Fig. 21 Clean Air Hose - 2.4L Turbo

1 - CLEAN AIR HOSE
2 - TURBOCHARGER

CYLINDER HEAD

DESCRIPTION

The cross flow designed, aluminum cylinder head contains dual over-head camshafts with four valves per cylinder (Fig. 22). The valves are arranged in two in-line banks. The intake valves face toward the front of the vehicle. The exhaust valves face the dash panel. The cylinder head incorporates powdered metal valve guides and seats. The cylinder head is sealed to the block using a multi-layer steel head gasket and retaining bolts.

Integral oil galleries provide lubrication passages to the hydraulic lash adjusters, camshafts, and valve mechanisms.

DIAGNOSIS AND TESTING—CYLINDER HEAD GASKET

A cylinder head gasket leak can be located between adjacent cylinders or between a cylinder and the adjacent water jacket.

Possible indications of the cylinder head gasket leaking between adjacent cylinders are:

- Loss of engine power
- Engine misfiring
- Poor fuel economy

Possible indications of the cylinder head gasket leaking between a cylinder and an adjacent water jacket are:

- Engine overheating

CYLINDER HEAD (Continued)

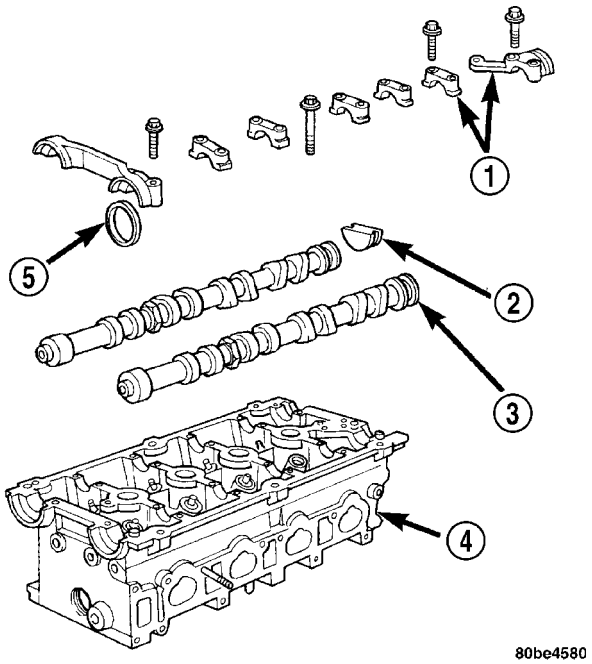

Fig. 22 Cylinder Head and Camshafts

1 - CAMSHAFT BEARING CAPS
2 - PLUG
3 - CAMSHAFT
4 - CYLINDER HEAD
5 - CAMSHAFT OIL SEAL

- Loss of coolant
- Excessive steam (white smoke) emitting from exhaust
- Coolant foaming

CYLINDER-TO-CYLINDER LEAKAGE TEST

To determine if an engine cylinder head gasket is leaking between adjacent cylinders, follow the procedures in Cylinder Compression Pressure Test (Refer to 9 - ENGINE - DIAGNOSIS AND TESTING). An engine cylinder head gasket leaking between adjacent cylinders will result in approximately a 50–70% reduction in compression pressure.

CYLINDER-TO-WATER JACKET LEAKAGE TEST

WARNING: USE EXTREME CAUTION WHEN THE ENGINE IS OPERATING WITH COOLANT PRESSURE CAP REMOVED.

VISUAL TEST METHOD

With the engine cool, remove the coolant pressure cap. Start the engine and allow it to warm up until thermostat opens.

If a large combustion/compression pressure leak exists, bubbles will be visible in the coolant.

COOLING SYSTEM TESTER METHOD

WARNING: WITH COOLING SYSTEM TESTER IN PLACE, PRESSURE WILL BUILD UP FAST. EXCESSIVE PRESSURE BUILT UP, BY CONTINUOUS ENGINE OPERATION, MUST BE RELEASED TO A SAFE PRESSURE POINT. NEVER PERMIT PRESSURE TO EXCEED 138 kPa (20 psi).

Install Cooling System Tester 7700 or equivalent to pressure cap neck. Start the engine and observe the tester's pressure gauge. If gauge pulsates with every power stroke of a cylinder a combustion pressure leak is evident.

CHEMICAL TEST METHOD

Combustion leaks into the cooling system can also be checked by using Bloc-Chek Kit C-3685-A or equivalent. Perform test following the procedures supplied with the tool kit.

REMOVAL - CYLINDER HEAD

(1) Perform fuel system pressure release procedure **before attempting any repairs (Refer to 14 - FUEL SYSTEM/FUEL DELIVERY - STANDARD PROCEDURE).**

(2) Remove clean air hose and air cleaner housing (Refer to 9 - ENGINE/AIR INTAKE SYSTEM/AIR CLEANER HOUSING - REMOVAL).

(3) Disconnect negative cable from battery.

(4) Drain cooling system (Refer to 7 - COOLING/ENGINE - STANDARD PROCEDURE).

(5) Remove upper intake manifold (Refer to 9 - ENGINE/MANIFOLDS/INTAKE MANIFOLD - REMOVAL).

(6) Remove fastener attaching dipstick tube to lower intake manifold (Fig. 23) or (Fig. 24).

(7) **Turbocharger equipped vehicles:** Remove lower intake manifold support bracket (Fig. 24).

(8) Disconnect the fuel supply line quick-connect at the fuel rail assembly (Refer to 14 - FUEL SYSTEM/FUEL DELIVERY/QUICK CONNECT FITTING - STANDARD PROCEDURE).

(9) Remove heater tube support bracket from cylinder head.

(10) Remove upper radiator hose. Disconnect heater hoses from thermostat housing.

(11) Disconnect engine coolant temperature sensor connector.

(12) Remove accessory drive belts (Refer to 7 - COOLING/ACCESSORY DRIVE/DRIVE BELTS - REMOVAL).

(13) Disconnect exhaust pipe from manifold.

(14) **Turbocharger equipped vehicles:** (Fig. 25)

- Remove turbocharger heat shields
- Remove elbow support bracket
- Remove turbocharger support bracket

CYLINDER HEAD (Continued)

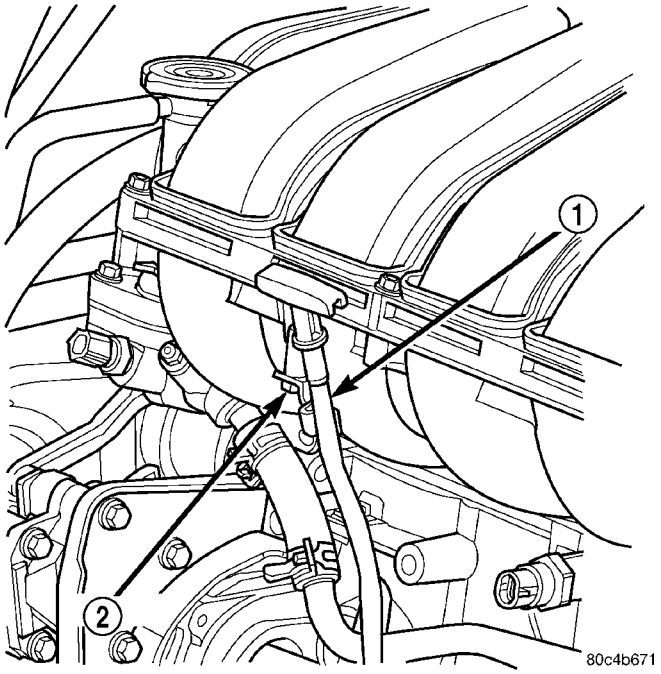

Fig. 23 Dipstick Tube

1 - DIPSTICK TUBE
2 - SCREW

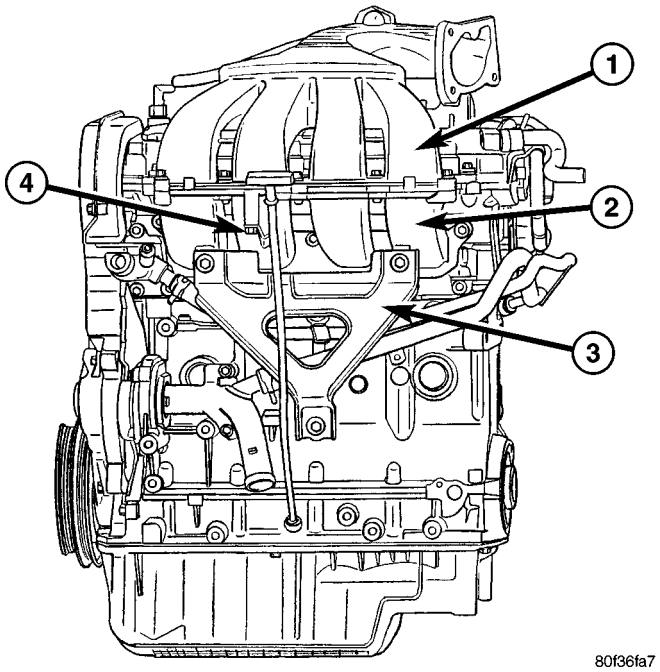

Fig. 24 Lower Intake Manifold Support Bracket - 2.4L Turbo

1 - UPPER INTAKE MANIFOLD
2 - LOWER INTAKE MANIFOLD
3 - SUPPORT BRACKET
4 - DIPSTICK TUBE SCREW

- Remove elbow

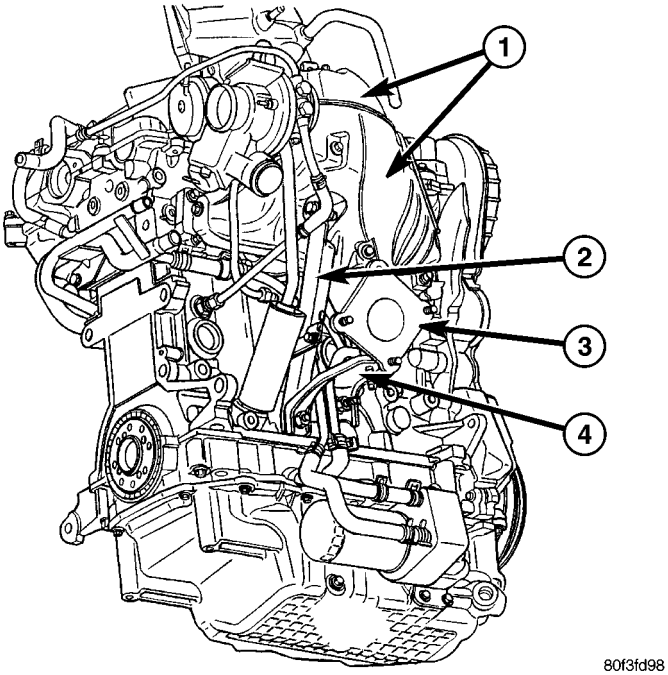

Fig. 25 Turbocharger Brackets and Heat Shields

1 - UPPER/LOWER HEAT SHIELDS
2 - TURBOCHARGER SUPPORT BRACKET
3 - ELBOW
4 - ELBOW SUPPORT BRACKET

(15) **Turbocharger equipped vehicles:** (Refer to 11 - EXHAUST SYSTEM/TURBOCHARGER SYSTEM/LINES AND HOSES - REMOVAL) (Fig. 26).

- Remove oil return tube
- Remove oil supply line
- Remove coolant supply line
- Remove coolant return line

(16) Disconnect ignition coil wiring connector. Remove ignition coil and plug wires from engine.

(17) Disconnect camshaft position sensor wiring connector.

(18) Remove timing belt and camshaft sprockets (Refer to 9 - ENGINE/VALVE TIMING/TIMING BELT AND SPROCKETS - REMOVAL).

(19) Remove timing belt idler pulley and rear timing belt cover (Refer to 9 - ENGINE/VALVE TIMING/TIMING BELT COVER(S) - REMOVAL).

(20) **Non-Turbo equipped vehicles:** Remove fasteners securing power steering pump fluid reservoir/bracket to cylinder head.

(21) Remove cylinder head cover (Refer to 9 - ENGINE/CYLINDER HEAD/CYLINDER HEAD COVER - REMOVAL).

(22) Remove camshafts (Refer to 9 - ENGINE/CYLINDER HEAD/CAMSHAFT(S) - REMOVAL).

(23) Remove rocker arms.

(24) Remove cylinder head bolts in the reverse sequence of tightening (Fig. 32).

(25) Remove cylinder head from engine block.

CYLINDER HEAD (Continued)

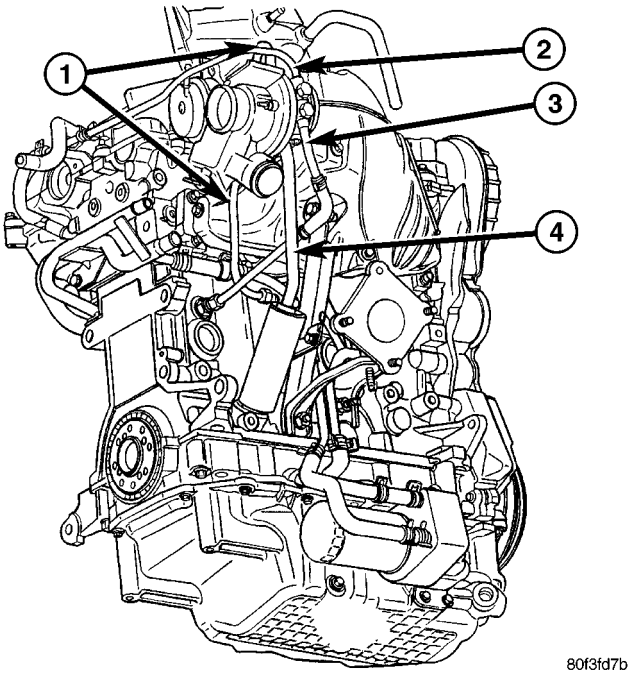

Fig. 26 Turbocharger Lines and Hoses

1 - OIL SUPPLY LINE
2 - COOLANT RETURN LINE
3 - COOLANT SUPPLY LINE
4 - OIL RETURN TUBE

(26) Inspect and clean cylinder head and block sealing surfaces. Refer to Cleaning and Inspection in this section for procedures.

NOTE: Ensure cylinder head bolt holes in the block are clean, dry (free of residual oil or coolant), and threads are not damaged.

CLEANING

To ensure engine gasket sealing, proper surface preparation must be performed, especially with the use of aluminum engine components and multi-layer steel cylinder head gaskets.

NOTE: Multi-Layer Steel (MLS) head gaskets require a scratch free sealing surface.

Remove all gasket material from cylinder head and block (Refer to 9 - ENGINE - STANDARD PROCEDURE). Be careful not to gouge or scratch the aluminum head sealing surface.

Clean all engine oil passages.

INSPECTION

(1) Cylinder head must be flat within 0.1 mm (0.004 in.) (Fig. 27).

(2) Inspect camshaft bearing journals for scoring.

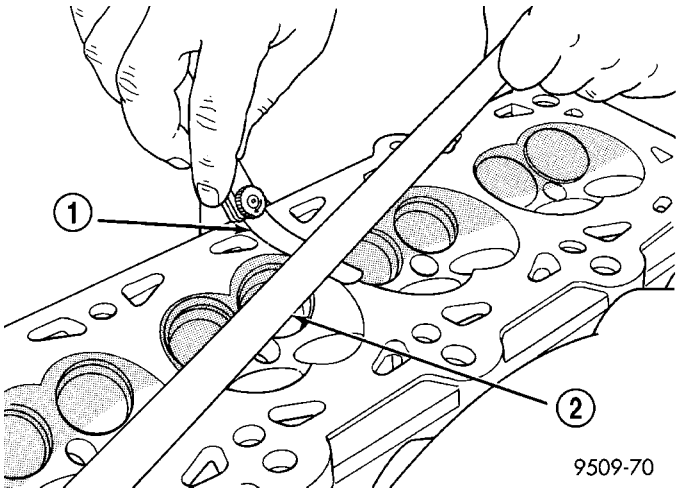

Fig. 27 Checking Cylinder Head Flatness

1 - FEELER GAUGE
2 - STRAIGHT EDGE

(3) Remove carbon and varnish deposits from inside of valve guides with a reliable guide cleaner.

(4) Using a small hole gauge and a micrometer, measure valve guides in 3 places top, middle and bottom (Fig. 28). (Refer to 9 - ENGINE - SPECIFICATIONS) Replace guides if they are not within specification.

(5) Check valve guide height (Fig. 29).

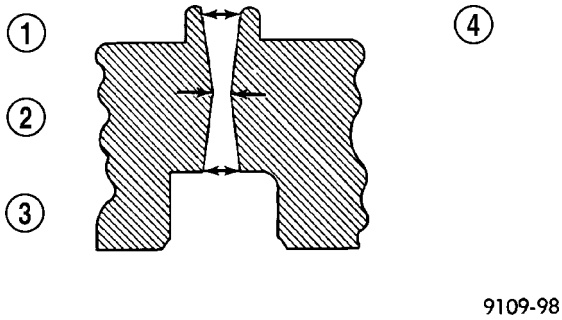

Fig. 28 Checking Wear on Valve Guide—Typical

1 - TOP
2 - MIDDLE
3 - BOTTOM
4 - CUT AWAY VIEW OF VALVE GUIDE MEASUREMENT LOCATIONS

INSTALLATION - CYLINDER HEAD

NOTE: The Cylinder head bolts should be examined BEFORE reuse. If the threads are necked down, the bolts should be replaced (Fig. 30).

Necking can be checked by holding a scale or straight edge against the threads. If all the threads do not contact the scale, the bolt should be replaced.

NOTE: Head gaskets for Non-Turbo and Turbo applications are NOT interchangeable.

CYLINDER HEAD (Continued)

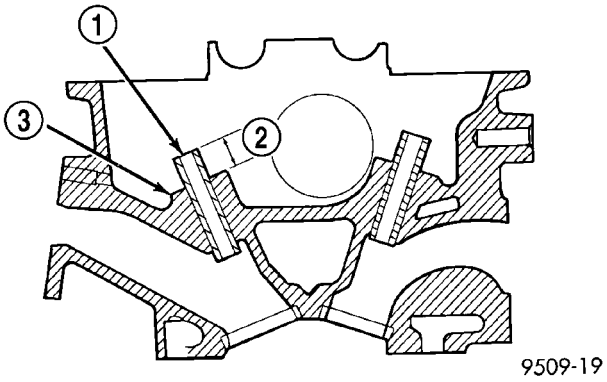

Fig. 29 Valve Guide Height

1 - VALVE GUIDE
2 - 13.25 - 13.75 MM (0.521 - 0.541 IN.)
3 - SPRING SEAT

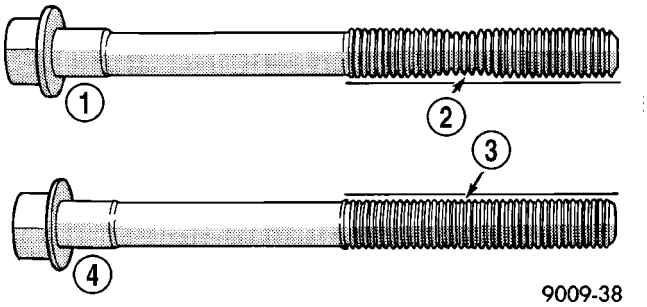

Fig. 30 Checking Bolts for Stretching (Necking)

1 - STRETCHED BOLT
2 - THREADS ARE NOT STRAIGHT ON LINE
3 - THREADS ARE STRAIGHT ON LINE
4 - UNSTRETCHED BOLT

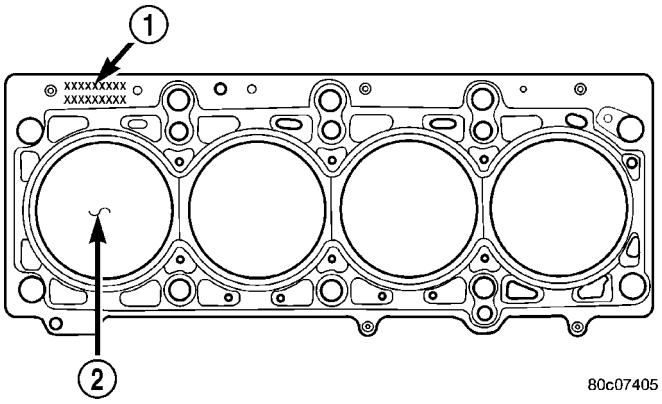

Fig. 31 Cylinder Head Gasket Positioning

1 - PART NUMBER FACES UP
2 - NO. 1 CYLINDER

(1) Position the new cylinder head gasket on engine block with the part number facing up (Fig. 31). Ensure gasket is seated over the locating dowels in block.

(2) Position cylinder head onto engine block.

(3) Before installing the bolts, the threads should be lightly coated with engine oil.

(4) Tighten the cylinder head bolts in the sequence shown in (Fig. 32). Using the 4 step torque-turn method, tighten according to the following values:

- First: All to 34 N·m (25 ft. lbs.)
- Second: All to 68 N·m (50 ft. lbs.)
- Third: All to 68 N·m (50 ft. lbs.)

CAUTION: Do not use a torque wrench for the Fourth step.

- **Fourth: Turn all bolts an additional 1/4 Turn**

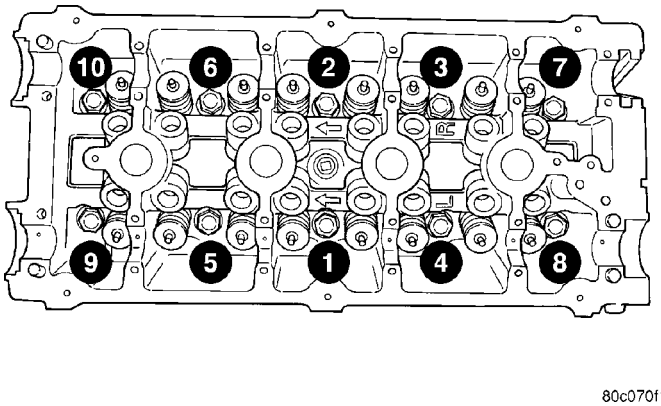

Fig. 32 Cylinder Head Tightening Sequence

(5) Install rocker arms and camshafts (Refer to 9 - ENGINE/CYLINDER HEAD/CAMSHAFT(S) - INSTALLATION).

(6) Install cylinder head cover (Refer to 9 - ENGINE/CYLINDER HEAD/CYLINDER HEAD COVER - INSTALLATION).

(7) Install rear timing belt cover and timing belt idler pulley (Refer to 9 - ENGINE/VALVE TIMING/TIMING BELT COVER(S) - INSTALLATION).

(8) Install camshaft sprockets and timing belt (Refer to 9 - ENGINE/VALVE TIMING/TIMING BELT AND SPROCKETS - INSTALLATION).

(9) Connect cam sensor wiring connector.

(10) Install ignition coil and plug wires. Connect ignition coil wiring connector.

(11) **Non-Turbo equipped vehicles:** Install power steering pump reservoir/bracket to cylinder head.

(12) **Turbocharger equipped vehicles:** (Refer to 11 - EXHAUST SYSTEM/TURBOCHARGER SYSTEM/LINES AND HOSES - INSTALLATION) (Fig. 26).

- Install coolant return line
- Install coolant supply line
- Install oil supply line
- Install oil return tube

(13) **Turbocharger equipped vehicles:** (Fig. 25)

CYLINDER HEAD (Continued)

- Install elbow
- Install turbocharger support bracket
- Install elbow support bracket
- Install turbocharger heat shields

(14) Install exhaust pipe to manifold. Tighten fasteners to 28 N·m (20 ft. lbs.).

(15) Install accessory drive belts (Refer to 7 - COOLING/ACCESSORY DRIVE/DRIVE BELTS - INSTALLATION).

(16) Connect engine coolant temperature sensor connector.

(17) Connect upper radiator hose. Connect heater hoses to thermostat housing.

(18) Install heater tube support bracket to cylinder head.

(19) **Turbocharger equipped vehicles:** Install lower intake manifold support bracket (Fig. 24).

(20) Install fastener attaching dipstick tube to lower intake manifold (Fig. 23) or (Fig. 24).

(21) Connect fuel supply line quick-connect at the fuel rail assembly (Refer to 14 - FUEL SYSTEM/ FUEL DELIVERY/QUICK CONNECT FITTING - STANDARD PROCEDURE).

(22) Install upper intake manifold (Refer to 9 - ENGINE/MANIFOLDS/INTAKE MANIFOLD - INSTALLATION).

(23) Fill cooling system (Refer to 7 - COOLING/ ENGINE - STANDARD PROCEDURE).

(24) Connect negative cable to battery.

(25) Install clean air hose and air cleaner housing (Refer to 9 - ENGINE/AIR INTAKE SYSTEM/AIR CLEANER HOUSING - INSTALLATION).

CAMSHAFT OIL SEAL(S)

REMOVAL

(1) Remove timing belt (Refer to 9 - ENGINE/ VALVE TIMING/TIMING BELT AND SPROCKETS - REMOVAL).

(2) Hold each camshaft sprocket with Special Tool 6847 while removing center bolt (Fig. 33).

(3) Remove camshaft sprockets.

(4) Remove rear timing belt cover (Refer to 9 - ENGINE/VALVE TIMING/TIMING BELT COVER(S) - REMOVAL).

(5) Remove camshaft seal using Special Tool C-4679A (Fig. 34).

CAUTION: Do not nick shaft seal surface or seal bore.

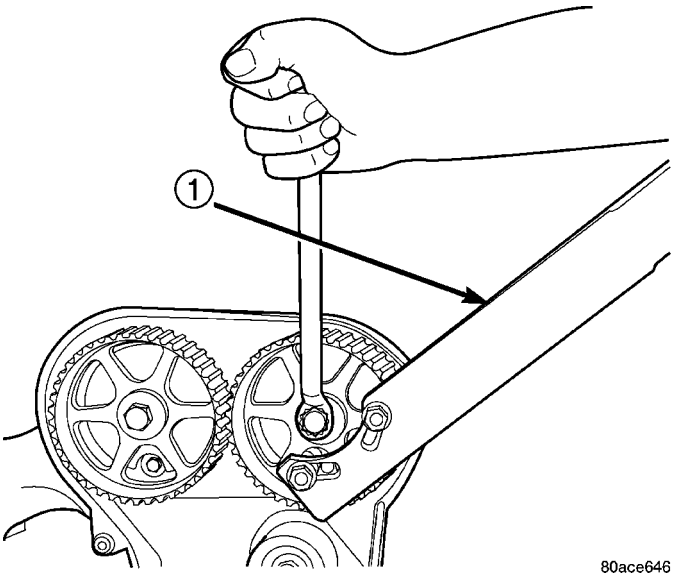

Fig. 33 Camshaft Sprocket - Removal/Installation

1 - SPECIAL TOOL 6847

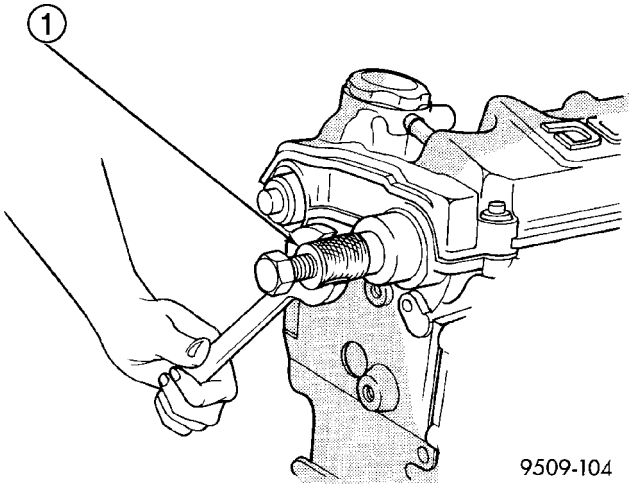

Fig. 34 Camshaft Oil Seal - Removal With C-4679A

1 - SPECIAL TOOL C-4679

INSTALLATION

(1) Shaft seal surface must be free of varnish, dirt or nicks. Polish with 400 grit paper if necessary.

(2) Install camshaft seals into cylinder head using Special Tool MD-998306 until flush with head (Fig. 35).

(3) Install timing belt rear cover (Refer to 9 - ENGINE/VALVE TIMING/TIMING BELT COVER(S) - INSTALLATION).

(4) Install camshaft sprockets. Hold each sprocket with Special Tool 6847 and tighten center bolt to 115 N·m (85 ft. lbs.) (Fig. 33).

(5) Install timing belt and front covers (Refer to 9 - ENGINE/VALVE TIMING/TIMING BELT AND SPROCKETS - INSTALLATION) (Refer to 9 -

CAMSHAFT OIL SEAL(S) (Continued)

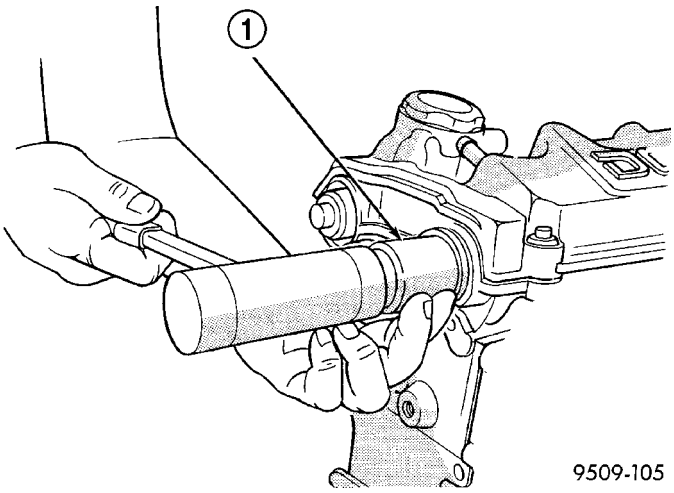

Fig. 35 Camshaft Seal - Installation

1 - SPECIAL TOOL MD-998306

ENGINE/VALVE TIMING/TIMING BELT COVER(S) - INSTALLATION).

CAMSHAFT(S)

DESCRIPTION

Both camshafts have six bearing journal surfaces and two cam lobes per cylinder (Fig. 36). Flanges at the rear journals control camshaft end play. Provision for a cam position sensor is located on the intake camshaft on the rear of the cylinder head. A hydrodynamic oil seal is used for oil control at the front of the camshaft.

OPERATION

The camshaft is driven by the crankshaft via drive sprockets and belt. The camshaft has precisely machined lobes to provide accurate valve timing and duration.

STANDARD PROCEDURE - MEASURING CAMSHAFT END PLAY

(1) Oil camshaft journals and install camshaft **WITHOUT** rocker arms. Install rear cam caps and tighten screws to specified torque.

(2) Using a suitable tool, move camshaft as far rearward as it will go.

(3) Zero dial indicator (Fig. 37).

(4) Move camshaft as far forward as it will go.

(5) Record reading on dial indicator. For end play specification, (Refer to 9 - ENGINE - SPECIFICATIONS).

(6) If end play is excessive, check cylinder head and camshaft for wear; replace as necessary.

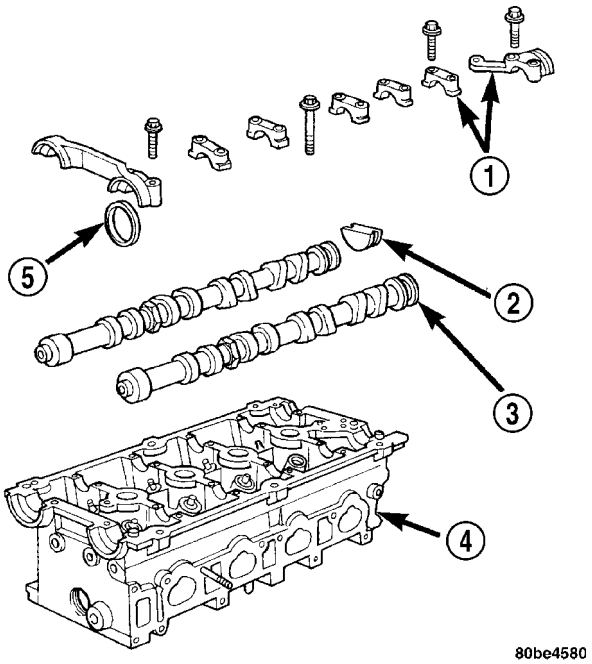

Fig. 36 Camshafts

1 - CAMSHAFT BEARING CAPS
2 - PLUG
3 - CAMSHAFT
4 - CYLINDER HEAD
5 - CAMSHAFT OIL SEAL

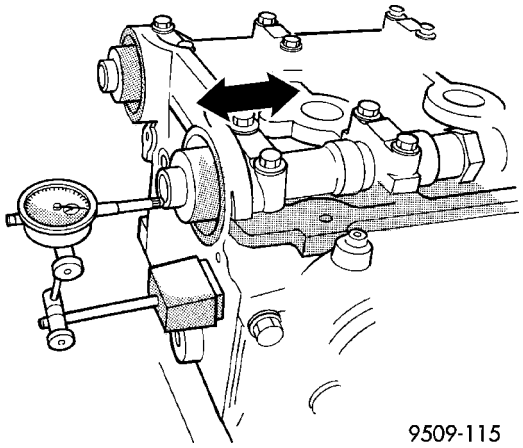

Fig. 37 Camshaft End Play - Typical

REMOVAL

(1) Remove cylinder head cover (Refer to 9 - ENGINE/CYLINDER HEAD/CYLINDER HEAD COVER - REMOVAL).

(2) Remove camshaft position sensor and camshaft target magnet (Refer to 8 - ELECTRICAL/IGNITION CONTROL/CAMSHAFT POSITION SENSOR - REMOVAL).

(3) Remove timing belt (Refer to 9 - ENGINE/VALVE TIMING/TIMING BELT AND SPROCKETS - REMOVAL).

CAMSHAFT(S) (Continued)

(4) Remove camshaft sprockets and timing belt rear cover (Refer to 9 - ENGINE/VALVE TIMING/ TIMING BELT COVER(S) - REMOVAL).

(5) Bearing caps are identified for location. Remove the outside bearing caps first (Fig. 38).

(6) Loosen the camshaft bearing cap attaching fasteners in sequence shown (Fig. 39) one camshaft at a time.

CAUTION: Camshafts are not interchangeable. The intake cam number 6 thrust bearing face spacing is wider.

(7) Identify the camshafts before removing from the head. The camshafts are not interchangeable.

(8) Remove camshafts from cylinder head.

NOTE: If removing rocker arms, identify for reinstallation in the original position.

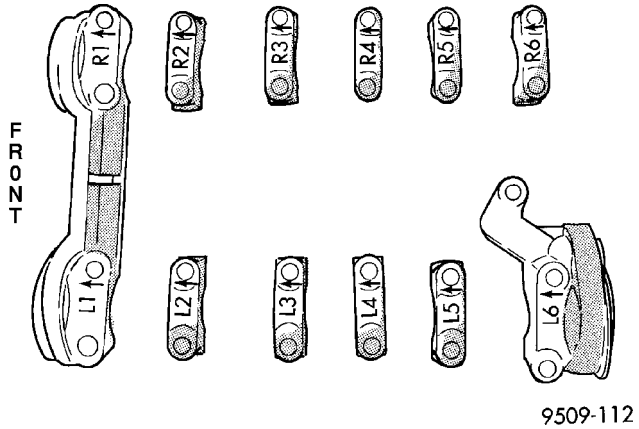

Fig. 38 Camshaft Bearing Cap Identification

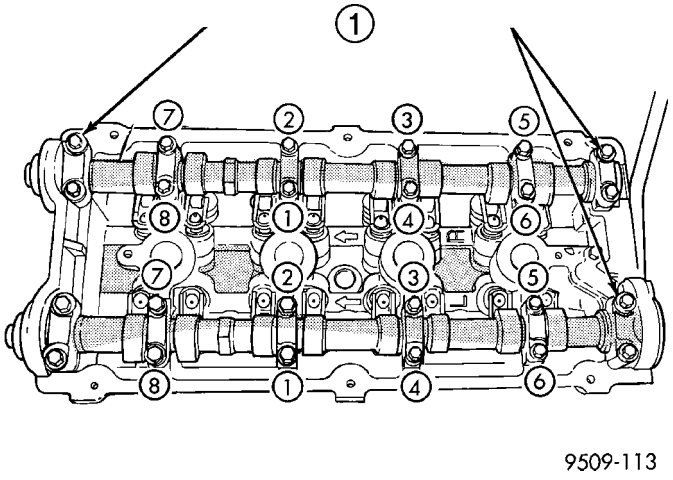

Fig. 39 Camshaft Bearing Cap - Removal

1 - REMOVE OUTSIDE BEARING CAPS FIRST

CLEANING

Clean camshaft with a suitable solvent.

INSPECTION

(1) Inspect camshaft bearing journals for damage and binding (Fig. 40). If journals are binding, check the cylinder head for damage. Also check cylinder head oil holes for clogging.

(2) Check the cam lobe and bearing surfaces for abnormal wear and damage. Replace camshaft if defective.

NOTE: If camshaft is replaced due to lobe wear or damage, always replace the rocker arms.

(3) Measure the lobe actual wear (unworn area - wear zone = actual wear) (Fig. 40) and replace camshaft if out of limit. Standard value is 0.0254 mm (0.001 in.), wear **limit** is 0.254 mm (0.010 in.).

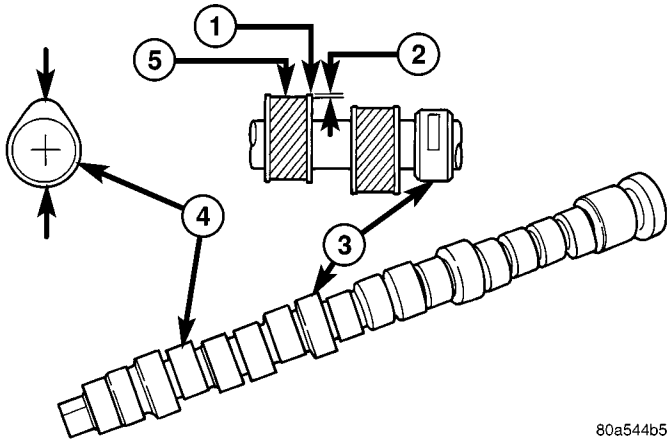

Fig. 40 Checking Camshaft(s) for Wear

1 - UNWORN AREA
2 - ACTUAL WEAR
3 - BEARING JOURNAL
4 - LOBE
5 - WEAR ZONE

INSTALLATION

CAUTION: Ensure that NONE of the pistons are at top dead center when installing the camshafts.

(1) Lubricate all camshaft bearing journals, rocker arms and camshaft lobes.

(2) Install all rocker arms in original positions, if reused.

(3) Position camshafts on cylinder head bearing journals. Install right and left camshaft bearing caps No. 2 – 5 and right No. 6. Tighten M6 fasteners to 12 N·m (105 in. lbs.) in sequence shown in (Fig. 41).

(4) Apply Mopar® Gasket Maker to No. 1 and No. 6 bearing caps (Fig. 42). Install bearing caps and tighten M8 fasteners to 28 N·m (250 in. lbs.).

NOTE: Bearing end caps must be installed before seals can be installed.

CAMSHAFT(S) (Continued)

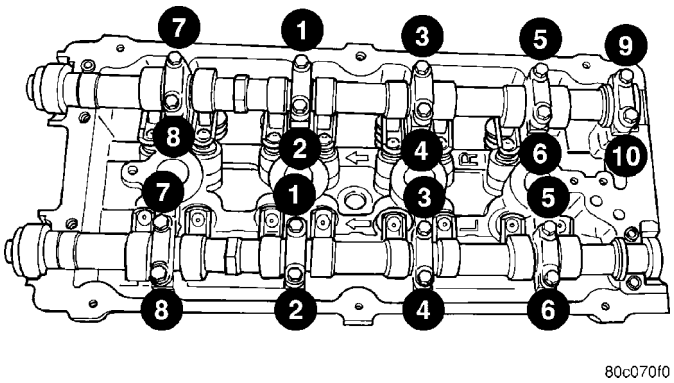

Fig. 41 Camshaft Bearing Cap Tightening Sequence

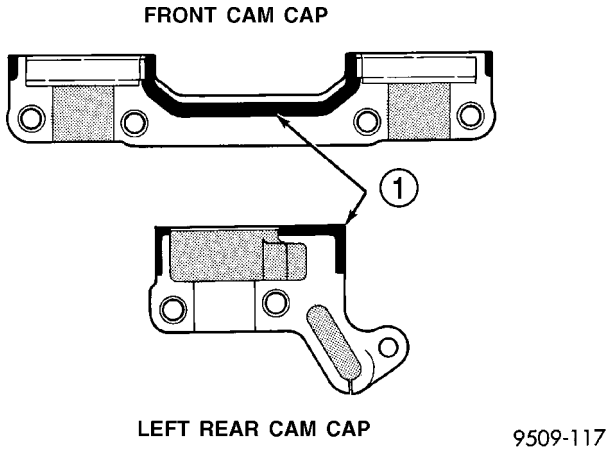

Fig. 42 Camshaft Bearing Cap Sealing

1 - 1.5 mm (.060 in.) DIAMETER BEAD OF MOPAR GASKET MAKER

(5) Install camshaft oil seals (Refer to 9 - ENGINE/CYLINDER HEAD/CAMSHAFT OIL SEAL(S) - INSTALLATION).

(6) Install camshaft target magnet and camshaft position sensor.

(7) Install cylinder head cover (Refer to 9 - ENGINE/CYLINDER HEAD/CYLINDER HEAD COVER - INSTALLATION).

(8) Install timing belt rear cover and camshaft sprockets (Refer to 9 - ENGINE/VALVE TIMING/TIMING BELT COVER(S) - INSTALLATION).

(9) Install timing belt (Refer to 9 - ENGINE/VALVE TIMING/TIMING BELT AND SPROCKETS - INSTALLATION).

CYLINDER HEAD COVER

REMOVAL

(1) Remove upper intake manifold (Refer to 9 - ENGINE/MANIFOLDS/INTAKE MANIFOLD - REMOVAL).

(2) Remove ignition coil and spark plug wires.

(3) Disconnect PCV and make-up air hoses from cylinder head cover (Fig. 43).

(4) Remove cylinder head cover bolts.

CAUTION: When removing cylinder head cover bolts, be careful not to interchange the two (2) center bolts with the seven (7) perimeter bolts. The two (2) center bolts contain an aluminum washer between the bolt head and torque limiter for sealing purposes.

(5) Remove cylinder head cover from cylinder head.

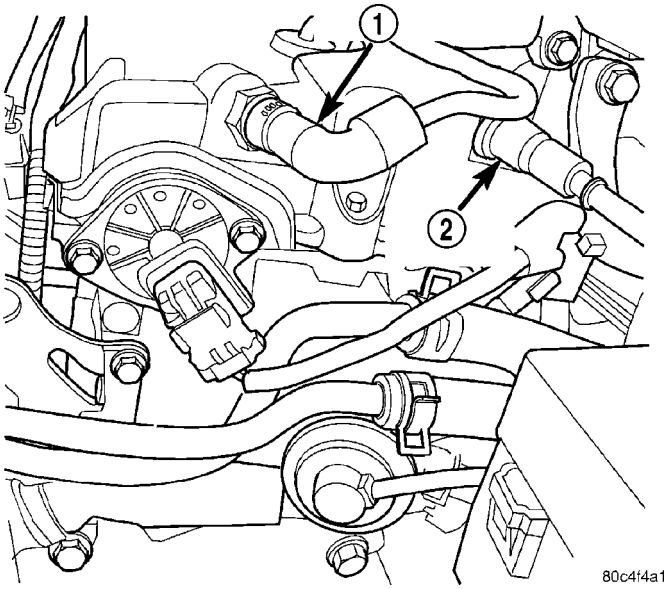

Fig. 43 PCV and Make-up

1 - PCV HOSE
2 - MAKE-UP AIR HOSE

INSTALLATION

NOTE: Replace spark plug well seals and bolt seals when installing a new cylinder head cover gasket.

(1) Install new cylinder head cover gaskets (Fig. 44) and spark plug well seals (Fig. 45).

(2) Replace cylinder head cover bolt seals (Fig. 46).

CAUTION: Do not allow oil or solvents to contact the timing belt as they can deteriorate the rubber and cause tooth skipping.

(3) Apply Mopar® Engine RTV GEN II at the camshaft cap corners and at the top edges of the 1/2 round seal (Fig. 47).

CYLINDER HEAD COVER (Continued)

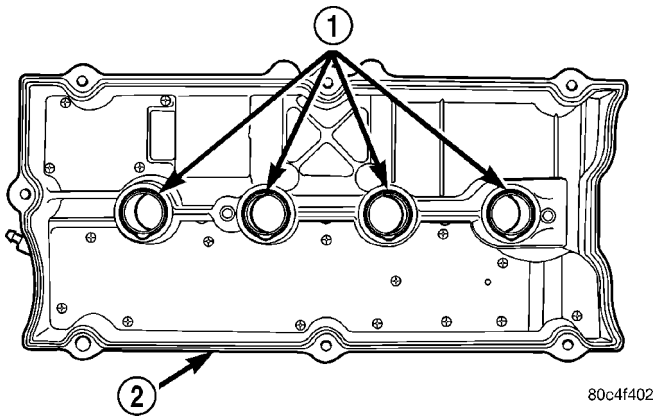

Fig. 44 Cylinder Head Cover Gasket and Spark Plug Well Seals

1 - SPARK PLUG WELL SEALS
2 - GASKET

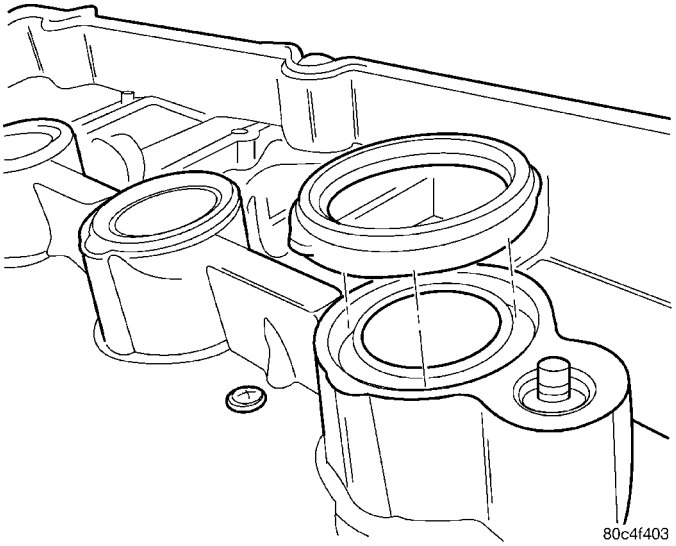

Fig. 45 Spark Plug Well Seals

CAUTION: When installing cylinder head cover bolts, be careful not to interchange the two (2) center bolts with the seven (7) perimeter bolts. The two (2) center bolts contain an aluminum washer between the bolt head and torque limiter for sealing purposes.

(4) Install cylinder head cover assembly to cylinder head. Install all bolts, ensuring the two (2) bolts containing the sealing washer are located in the center locations of cover. Tighten bolts in sequence shown in (Fig. 48). Using a 3 step torque method as follows:

(a) Tighten all bolts to 4.5 N·m (40 in. lbs.).
(b) Tighten all bolts to 9.0 N·m (80 in. lbs.).
(c) Tighten all bolts to 12 N·m (105 in. lbs.).

(5) Install ignition coil and spark plug wires. Tighten fasteners to 12 N·m (105 in. lbs.).

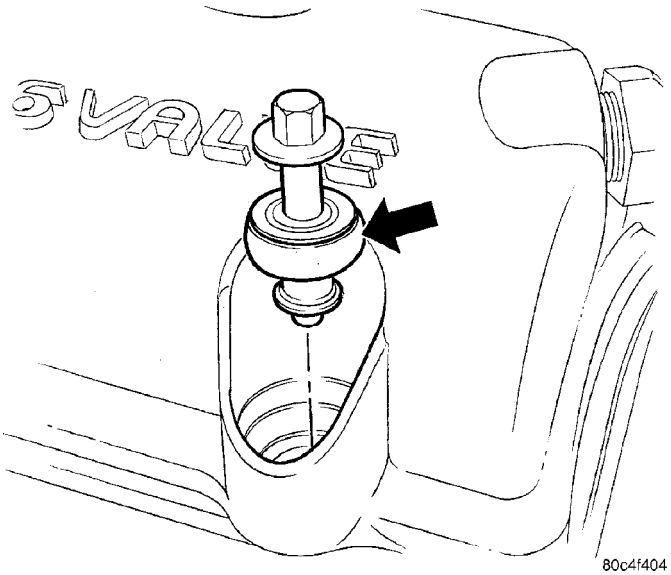

Fig. 46 Cylinder Head Cover Bolt Assembly

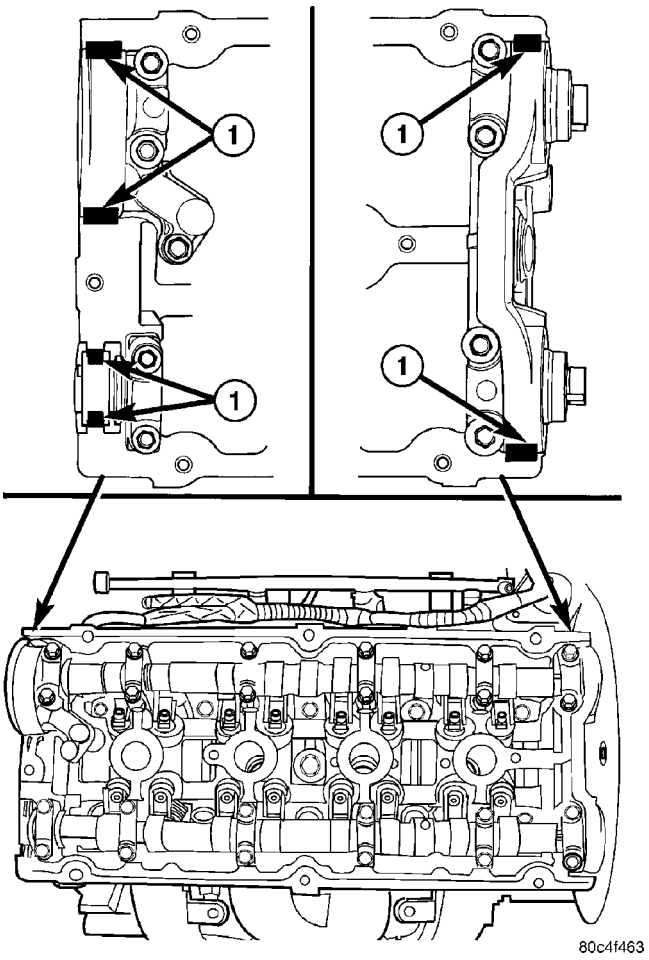

Fig. 47 Sealer Locations

1 – SEALER LOCATION

(6) If the PCV valve was removed, apply Mopar® Thread Sealant with Teflon to threads and install

CYLINDER HEAD COVER (Continued)

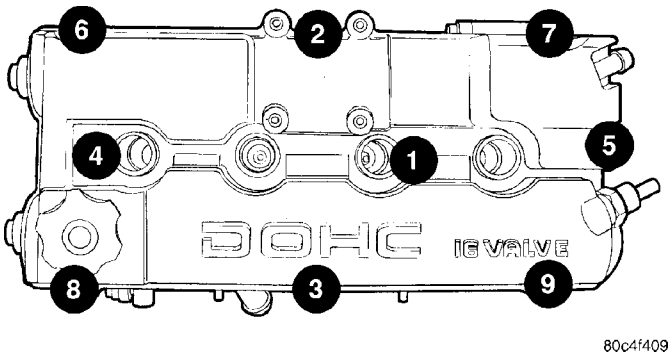

Fig. 48 Cylinder Head Cover Tightening Sequence (Typical Cover Shown)

valve to cylinder head cover. Tighten PCV valve to 8 N·m (70 in. lbs.).

(7) Connect PCV and make-up air hoses to cylinder head cover (Fig. 43).

(8) Install upper intake manifold (Refer to 9 - ENGINE/MANIFOLDS/INTAKE MANIFOLD - INSTALLATION).

HYDRAULIC LASH ADJUSTERS

DIAGNOSIS AND TESTING

HYDRAULIC LASH ADJUSTER NOISE DIAGNOSIS

A tappet-like noise may be produced from several items. Check the following items.

(1) Engine oil level too high or too low. This may cause aerated oil to enter the adjusters and cause them to be spongy.

(2) Insufficient running time after rebuilding cylinder head. Low speed running up to 1 hour may be required.

(3) During this time, turn engine off and let set for a few minutes before restarting. Repeat this several times after engine has reached normal operating temperature.

(4) Low oil pressure.

(5) The oil restrictor (integral to the cylinder head gasket) in the vertical oil passage to the cylinder head is plugged with debris.

(6) Air ingested into oil due to broken or cracked oil pump pick up.

(7) Worn valve guides.

(8) Rocker arm ears contacting valve spring retainer.

(9) Rocker arm loose, adjuster stuck or at maximum extension and still leaves lash in the system.

(10) Faulty lash adjuster.

- Check lash adjusters for sponginess while installed in cylinder head. Depress part of rocker arm over adjuster. Normal adjusters should feel very firm. Spongy adjusters can be bottomed out easily.
- Remove suspected lash adjusters, and replace as necessary.

REMOVAL

NOTE: This procedure is for in-vehicle service with camshafts installed.

(1) Remove cylinder head cover. (Refer to 9 - ENGINE/CYLINDER HEAD/CYLINDER HEAD COVER(S) - REMOVAL)

(2) Remove rocker arm. (Refer to 9 - ENGINE/CYLINDER HEAD/ROCKER ARMS - REMOVAL)

(3) Remove hydraulic lash adjuster (Fig. 49).

(4) Repeat removal procedure for each hydraulic lash adjuster.

(5) If reusing, mark each hydraulic lash adjuster for reassembly in original position. Lash adjusters are serviced as an assembly.

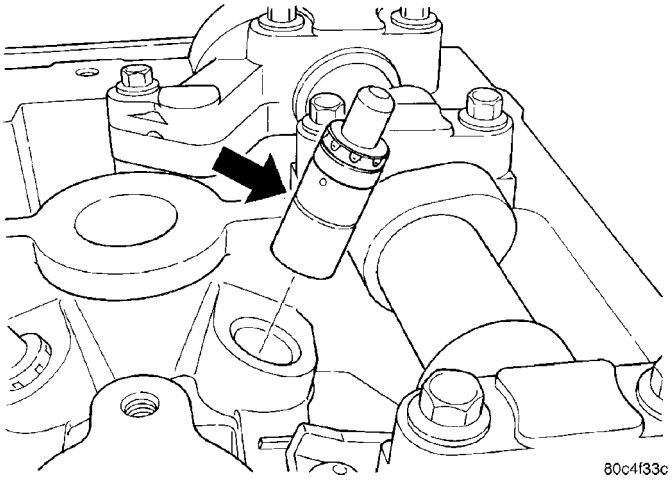

Fig. 49 Hydraulic Lash Adjuster

INSTALLATION

(1) Install hydraulic lash adjuster (Fig. 49). Ensure the lash adjusters are at least partially full of engine oil. This is indicated by little or no plunger travel when the lifter is depressed.

(2) Install rocker arm. (Refer to 9 - ENGINE/CYLINDER HEAD/ROCKER ARMS - INSTALLATION)

(3) Repeat installation procedure for each hydraulic lash adjuster.

(4) Install cylinder head cover. (Refer to 9 - ENGINE/CYLINDER HEAD/CYLINDER HEAD COVER(S) - INSTALLATION)

INTAKE/EXHAUST VALVES & SEATS

DESCRIPTION

The valves are made of heat resistant steel. They have chrome plated stems to prevent scuffing. Viton rubber valve stem seals are integral with the spring seats. The valves have three-bead lock keepers to retain springs and to promote valve rotation.

OPERATION

The four valves per cylinder (two intake and two exhaust) are opened by using roller rocker arms which pivot on hydraulic lash adjusters.

CLEANING

(1) Clean all valves thoroughly and discard burned, warped and cracked valves.

ROCKER ARMS

REMOVAL

NOTE: This procedure is for in-vehicle service with camshafts installed.

(1) Remove cylinder head cover. (Refer to 9 - ENGINE/CYLINDER HEAD/CYLINDER HEAD COVER(S) - REMOVAL)

(2) Remove spark plugs.

(3) Rotate engine until the camshaft lobe, on the follower being removed, is positioned on its base circle (heel). Also, the piston should be a minimum of 6.3 mm (0.25 in) below TDC position.

CAUTION: If cam follower assemblies are to be reused, always mark position for reassembly in their original positions.

(4) Using Special Tools 8215A and 8436 slowly depress valve assembly until rocker arm can be removed (Fig. 50).

(5) Repeat removal procedure for each rocker arm.

INSPECTION

Inspect the rocker arm for wear or damage (Fig. 51). Replace as necessary.

INSTALLATION

(1) Lubricate rocker arm with clean engine oil.

(2) Using Special Tools 8215A and 8436 slowly depress valve assembly until rocker arm can be installed on the hydraulic lifter and valve stem (Fig. 50).

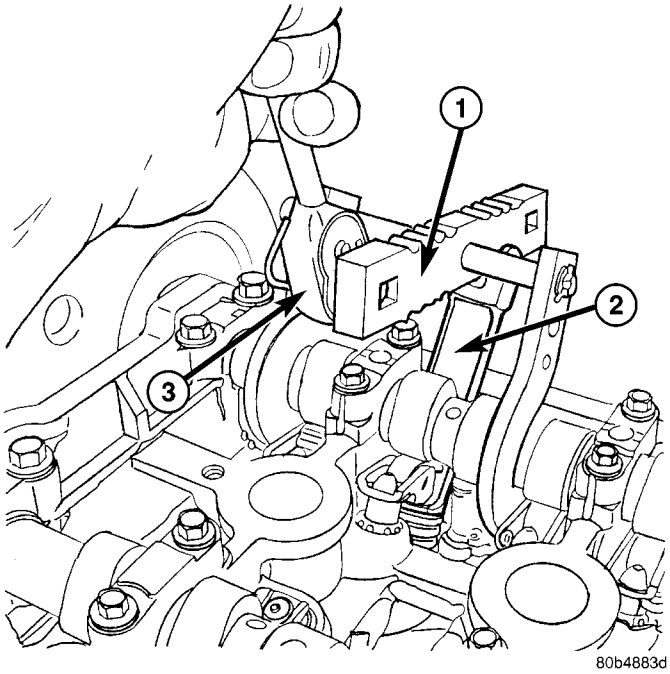

Fig. 50 Rocker Arm - Removal/Installation

1 - SPECIAL TOOL 8215A
2 - SPECIAL TOOL 8436
3 - 3/8″ DRIVE RACHET

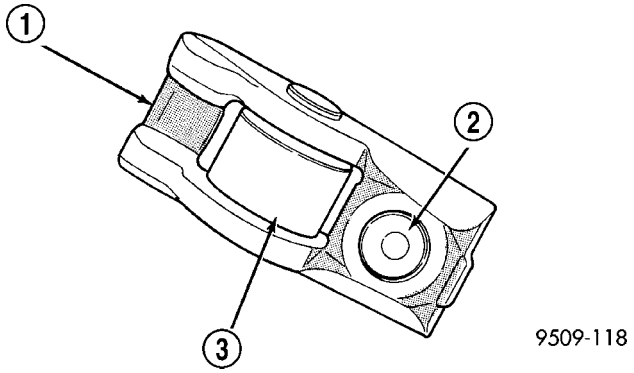

Fig. 51 Rocker Arm

1 - TIP
2 - LASH ADJUSTER POCKET
3 - ROLLER

(3) Repeat installation procedure for each rocker arm.

(4) Install spark plugs.

(5) Install cylinder head cover. (Refer to 9 - ENGINE/CYLINDER HEAD/CYLINDER HEAD COVER(S) - INSTALLATION)

VALVE SPRINGS & SEALS

REMOVAL

REMOVAL - CYLINDER HEAD ON

(1) Remove cylinder head cover (Refer to 9 - ENGINE/CYLINDER HEAD/CYLINDER HEAD COVER(S) - REMOVAL).

(2) Remove camshafts (Refer to 9 - ENGINE/CYLINDER HEAD/CAMSHAFT(S) - REMOVAL).

(3) Rotate crankshaft until piston is at TDC on compression.

(4) With air hose attached to adapter tool installed in spark plug hole, apply 90-120 psi air pressure.

(5) Using Special Tool MD-998772-A with adapter 6779 (Fig. 52), compress valve springs and remove valve locks.

(6) Remove valve spring(s).

(7) Remove valve stem seal(s) by a using valve stem seal tool (Fig. 54).

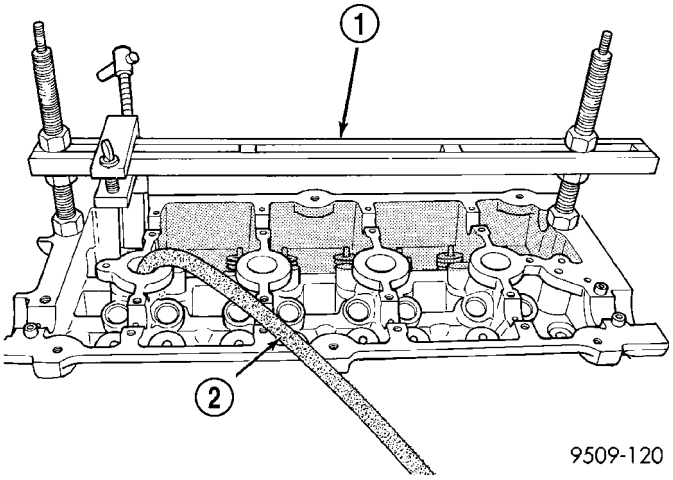

Fig. 52 Valve Spring - Removal/Installation

1 - VALVE SPRING COMPRESSOR MD 998772A
2 - AIR HOSE

REMOVAL - CYLINDER HEAD OFF

(1) With cylinder head removed from cylinder block, compress valve springs using a universal valve spring compressor.

(2) Remove valve retaining locks, valve spring retainers, valve stem seals and valve springs.

(3) Before removing valves, **remove any burrs from valve stem lock grooves to prevent damage to the valve guides.** Identify valves, locks and retainers to insure installation in original location.

(4) Inspect the valves. (Refer to 9 - ENGINE/CYLINDER HEAD/VALVE SPRINGS - INSPECTION)

INSPECTION

(1) Whenever valves have been removed for inspection, reconditioning or replacement, valve springs should be tested for correct tension. Discard the springs that do not meet specifications. The following specifications apply to both intake and exhaust valves springs:

- Valve Closed Nominal Tension—76 lbs. @ 38.0 mm (1.50 in.)
- Valve Open Nominal Tension—136 lbs. @ 29.75 mm (1.17 in.)

(2) Inspect each valve spring for squareness with a steel square and surface plate, test springs from both ends. If the spring is more than 1.5 mm (1/16 inch) out of square, install a new spring.

INSTALLATION

INSTALLATION - CYLINDER HEAD ON

(1) Install valve seal/valve spring seat assembly (Fig. 53). Push the assembly down to seat it onto the valve guide.

(2) Install valve spring and retainer, use Special Tool MD-998772-A with adapter 6779 to compress valve springs only enough to install locks (Fig. 52). Correct alignment of tool is necessary to avoid nicking valve stems.

(3) Remove air hose and install spark plugs.

(4) Install camshafts (Refer to 9 - ENGINE/CYLINDER HEAD/CAMSHAFT(S) - INSTALLATION).

(5) Install cylinder head cover (Refer to 9 - ENGINE/CYLINDER HEAD/CYLINDER HEAD COVER - INSTALLATION).

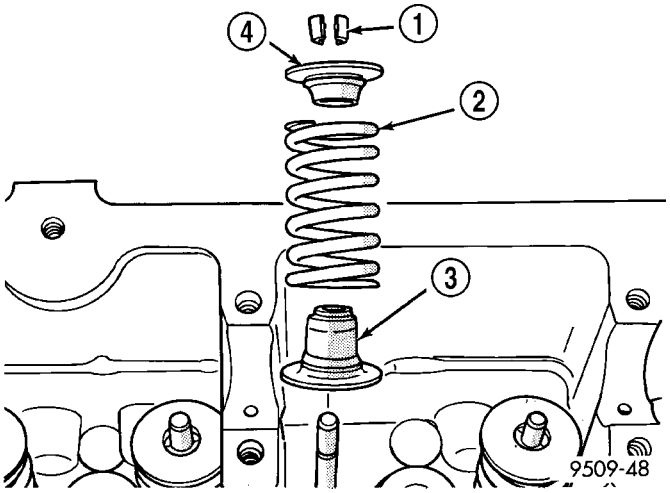

Fig. 53 Valve Stem Seal/Valve Spring Seat

1 - VALVE RETAINING LOCKS
2 - VALVE SPRING
3 - VALVE SEAL AND VALVE SPRING SEAT ASSEMBLY
4 - VALVE SPRING RETAINER

VALVE SPRINGS & SEALS (Continued)

INSTALLATION - CYLINDER HEAD OFF

(1) Coat valve stems with clean engine oil and insert in cylinder head.

(2) Install new valve stem seals on all valves using a valve stem seal tool (Fig. 54). The valve stem seals should be pushed firmly and squarely over valve guide.

CAUTION: When oversize valves are used, the corresponding oversize valve seal must also be used. Excessive guide wear may result if oversize seals are not used with oversize valves.

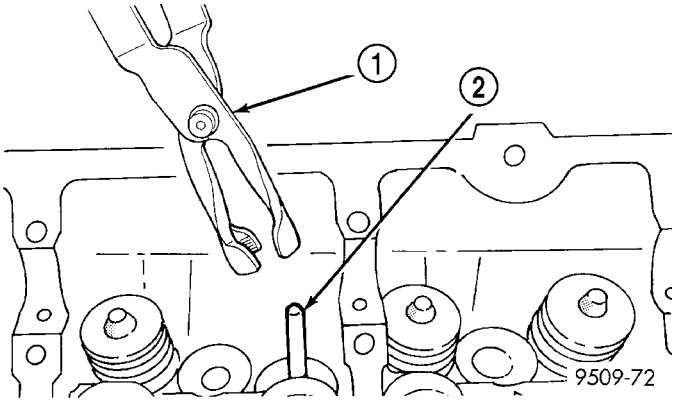

Fig. 54 Valve Stem Oil Seal Tool

1 - VALVE SEAL TOOL
2 - VALVE STEM

(3) Install valve springs and retainers. Compress valve springs only enough to install locks, taking care not to misalign the direction of compression. Nicked valve stems may result from misalignment of the valve spring compressor.

CAUTION: When depressing the valve spring retainers with valve spring compressor the locks can become dislocated. Ensure both locks are in the correct location after removing tool.

(4) Check the valve spring installed height B after refacing the valve and seat (Fig. 55). Make sure measurements are taken from top of spring seat to the bottom surface of spring retainer. If height is greater than 38.75 mm (1.525 in.), install a 0.762 mm (0.030 in.) spacer under the valve spring seat to bring spring height back within specification.

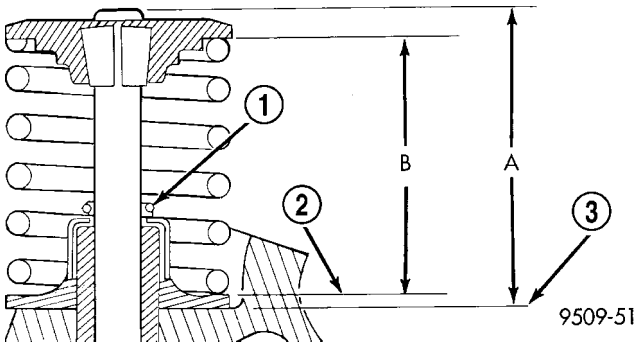

Fig. 55 Checking Spring Installed Height and Valve Tip Height Dimensions

1 - GARTER SPRING
2 - VALVE SPRING SEAT
3 - CYLINDER HEAD SURFACE

ENGINE BLOCK

DESCRIPTION

The cast iron cylinder block is a two-piece assembly, consisting of the cylinder block and bedplate (Fig. 56). The bedplate incorporates the main bearing caps and bolts to the cylinder block. This design offers a much stronger lower end and increased cylinder block rigidity. The rear oil seal retainer is integral with the block. The bedplate and block are serviced as an assembly.

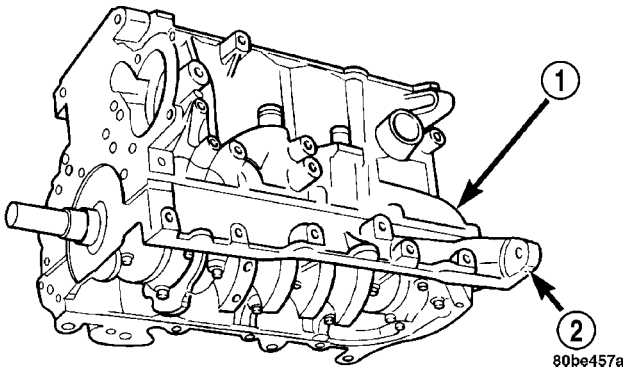

Fig. 56 Cylinder Block and Bedplate

1 - CYLINDER BLOCK
2 - BEDPLATE

STANDARD PROCEDURE - CYLINDER BORE HONING

(1) Used carefully, the cylinder bore resizing hone, recommended tool C-823 or equivalent, equipped with 220 grit stones, is the best tool for this honing procedure. In addition to deglazing, it will reduce taper and out-of-round as well as removing light scuffing, scoring or scratches. Usually a few strokes will clean up a bore and maintain the required limits.

ENGINE BLOCK (Continued)

(2) Deglazing of the cylinder walls may be done using a cylinder surfacing hone, recommended tool C-3501 or equivalent, equipped with 280 grit stones, if the cylinder bore is straight and round. 20–60 strokes depending on the bore condition, will be sufficient to provide a satisfactory surface. Use a light honing oil. **Do not use engine or transmission oil, mineral spirits or kerosene.** Inspect cylinder walls after each 20 strokes.

(3) Honing should be done by moving the hone up and down fast enough to get a cross-hatch pattern. When hone marks **intersect** at 40-60 degrees, the cross hatch angle is most satisfactory for proper seating of rings (Fig. 57).

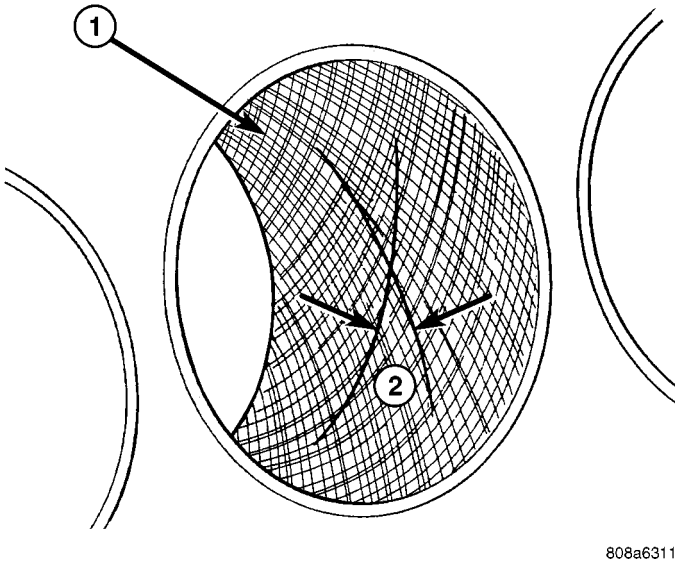

Fig. 57 Cylinder Bore Cross-Hatch Pattern

1 - CROSS-HATCH PATTERN
2 - 40°–60°

(4) A controlled hone motor speed between 200–300 RPM is necessary to obtain the proper cross-hatch angle. The number of up and down strokes per minute can be regulated to get the desired 40–60 degree angle. Faster up and down strokes increase the cross-hatch angle.

(5) After honing, it is necessary that the block be cleaned again to remove all traces of abrasive.

CAUTION: Ensure all abrasives are removed from engine parts after honing. It is recommended that a solution of soap and hot water be used with a brush and the parts then thoroughly dried. The bore can be considered clean when it can be wiped clean with a white cloth and cloth remains clean. Oil the bores after cleaning to prevent rusting.

CLEANING

Clean cylinder block thoroughly using a suitable cleaning solvent.

INSPECTION

ENGINE BLOCK

(1) Clean cylinder block thoroughly and check all core hole plugs for evidence of leaking.

(2) If new core plugs are to be installed, (Refer to 9 - ENGINE - STANDARD PROCEDURE - ENGINE CORE AND OIL GALLERY PLUGS).

(3) Examine block and cylinder bores for cracks or fractures.

(4) Check block deck surfaces for flatness. Deck surface must be within service limit of 0.1 mm (0.004 in.).

CYLINDER BORE

NOTE: The cylinder bores should be measured at normal room temperature, 21°C (70°F).

The cylinder walls should be checked for out-of-round and taper with Tool C119 or equivalent (Fig. 58) (Refer to 9 - ENGINE - SPECIFICATIONS). If the cylinder walls are badly scuffed or scored, the cylinder block should be replaced, and new pistons and rings fitted.

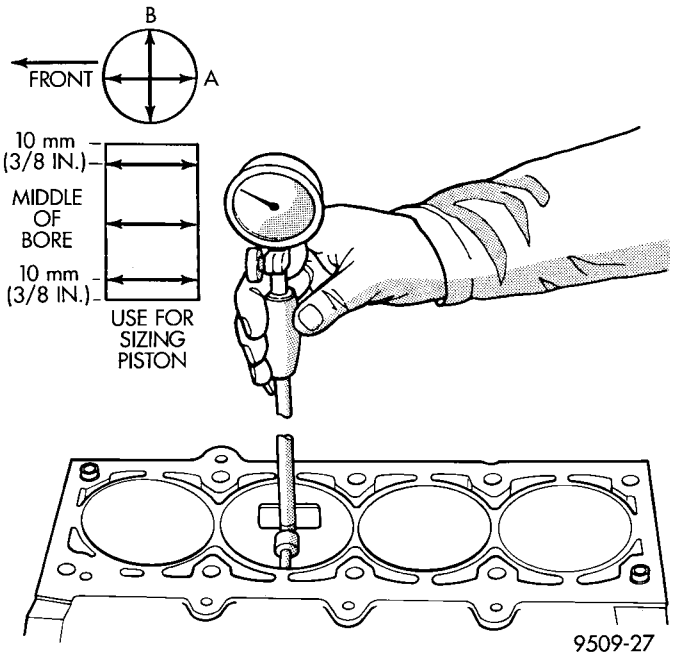

Fig. 58 Checking Cylinder Bore Size

Measure the cylinder bore at three levels in directions A and B (Fig. 58). Top measurement should be 10 mm (3/8 in.) down and bottom measurement

ENGINE BLOCK (Continued)

should be 10 mm (3/8 in.) up from bottom of bore. (Refer to 9 - ENGINE - SPECIFICATIONS).

CRANKSHAFT

STANDARD PROCEDURE - MEASURING CRANKSHAFT END PLAY

(1) Mount a dial indicator to front of engine with the locating probe on nose of crankshaft (Fig. 59).

(2) Move crankshaft all the way to the rear of its travel.

(3) Zero the dial indicator.

(4) Move crankshaft all the way to the front and read the dial indicator. (Refer to 9 - ENGINE - SPECIFICATIONS) for end play specification.

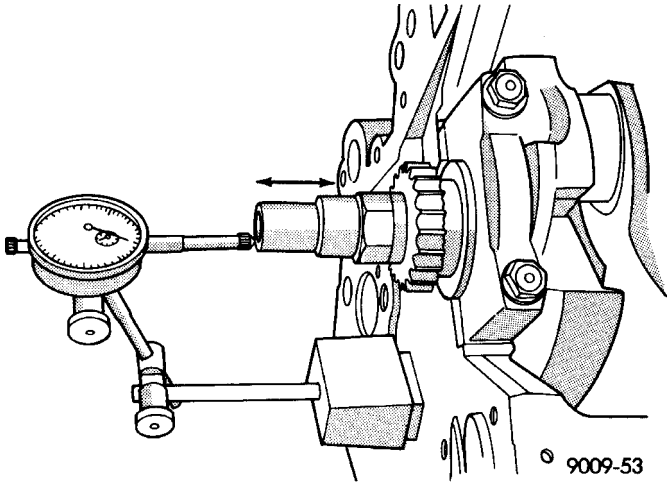

Fig. 59 Checking Crankshaft End Play—Typical

REMOVAL - CRANKSHAFT

NOTE: Crankshaft can not be removed when engine is in vehicle.

(1) Remove engine assembly from vehicle (Refer to 9 - ENGINE - REMOVAL).

(2) Separate transaxle from engine.

(3) Remove drive plate/flex plate.

(4) Remove crankshaft rear oil seal (Refer to 9 - ENGINE/ENGINE BLOCK/CRANKSHAFT OIL SEAL - REAR - REMOVAL).

(5) Mount engine on a suitable repair stand.

(6) Drain engine oil and remove oil filter.

(7) Remove crankshaft vibration damper (Refer to 9 - ENGINE/ENGINE BLOCK/VIBRATION DAMPER - REMOVAL).

(8) Remove engine mount support bracket.

(9) Remove front timing belt covers (Refer to 9 - ENGINE/VALVE TIMING/TIMING BELT COVER(S) - REMOVAL).

(10) Remove the timing belt (Refer to 9 - ENGINE/VALVE TIMING/TIMING BELT AND SPROCKETS - REMOVAL).

(11) Remove the oil pan (Refer to 9 - ENGINE/LUBRICATION/OIL PAN - REMOVAL).

(12) Remove oil pump pick-up tube.

(13) Remove the crankshaft sprocket and oil pump (Refer to 9 - ENGINE/LUBRICATION/OIL PUMP - REMOVAL).

(14) Remove balance shafts and housing assembly (Refer to 9 - ENGINE/VALVE TIMING/BALANCE SHAFT - REMOVAL).

(15) Remove crankshaft position sensor.

NOTE: If piston/connecting rod replacement is necessary, remove cylinder head (Refer to 9 - ENGINE/CYLINDER HEAD - REMOVAL).

(16) Using a permanent ink or paint marker, identify cylinder number on each connecting rod cap (Fig. 60).

CAUTION: DO NOT use a number stamp or a punch to mark connecting rods. Damage to connecting rod could occur.

(17) Remove all connecting rod bolts and caps. Care should be taken not to damage the fracture rod and cap surfaces.

NOTE: Do not reuse connecting rod bolts.

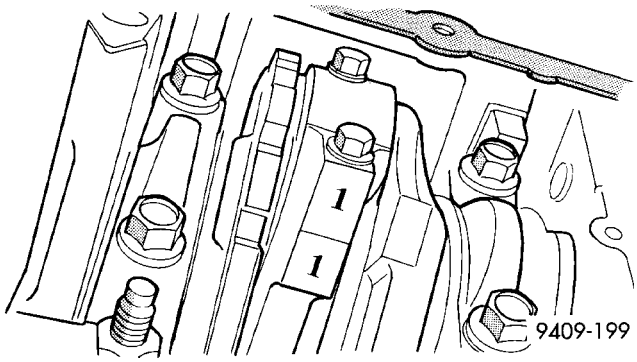

Fig. 60 Identify Connecting Rod to Cylinder

(18) Remove all bedplate bolts from the engine block (Fig. 61).

(19) Using a mallet gently tap the bedplate loose from the engine block dowel pins.

CAUTION: Do not pry up on one side of the bedplate. Damage may occur to cylinder block to bedplate alignment and thrust bearing.

(20) Bedplate should be removed evenly from the cylinder block dowel pins to prevent damage to the dowel pins and thrust bearing.

CRANKSHAFT (Continued)

CAUTION: Use extreme care when handling crankshaft. Tone wheel damage can occur if crankshaft is mis-handled.

(21) Lift out crankshaft from cylinder block. Do not damage the main bearings or journals when removing the crankshaft.

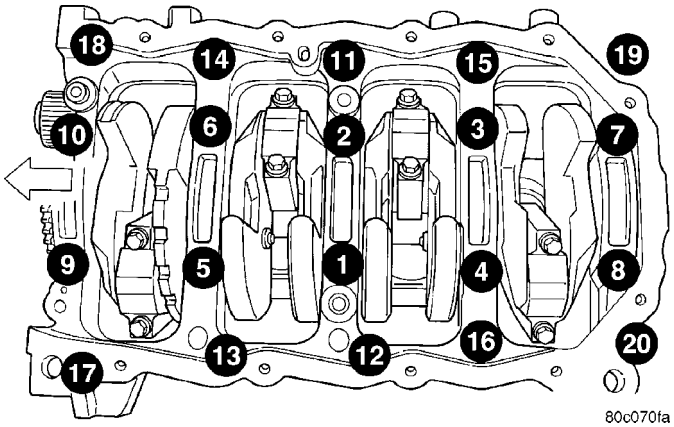

Fig. 61 Bedplate Bolt Tightenening Sequence

INSPECTION

The crankshaft journals should be checked for excessive wear, taper and scoring (Fig. 62). Limits of taper or out of round on any crankshaft journals should be held to 0.025 mm (0.001 in.). Journal grinding should not exceed 0.305 mm (0.012 in.) under the standard journal diameter. DO NOT grind thrust faces of No. 3 main bearing. DO NOT nick crank pin or bearing fillets. After grinding, remove rough edges from crankshaft oil holes and clean out all passages.

CAUTION: With the nodular cast iron crankshafts, it is important that the final paper or cloth polish be in the same direction as normal rotation in the engine.

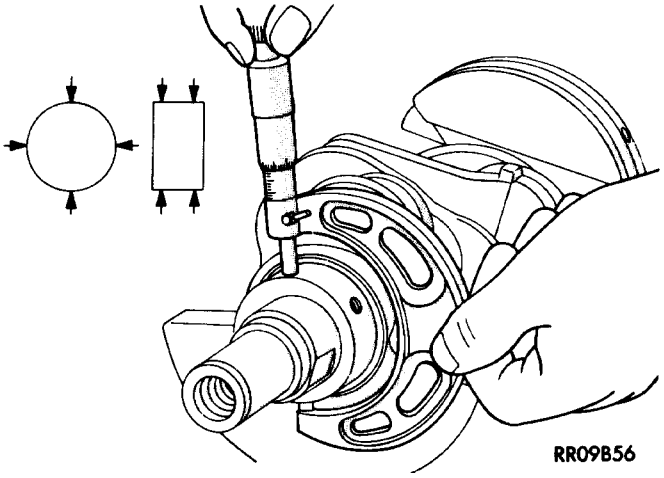

Fig. 62 Crankshaft Journal Measurements

INSTALLATION - CRANKSHAFT

CRANKSHAFT MAIN BEARING LOCATION

Non-Turbo

The crankshaft is supported in five main bearings. All upper and lower bearing shells in the crankcase have oil grooves and holes (Fig. 63). Crankshaft end play is controlled by a flanged bearing on the number three main bearing journal.

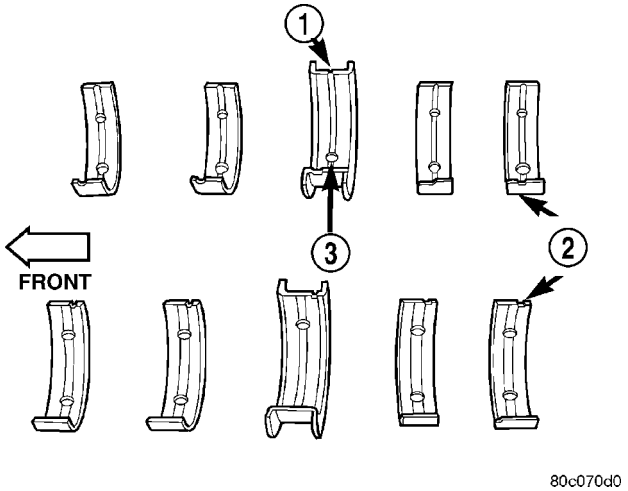

Fig. 63 Main Bearing Identification

1 - OIL GROOVE
2 - MAIN BEARINGS
3 - OIL HOLE

Turbo

CAUTION: Turbocharger equipped vehicles: The upper and lower thrust bearing halves are NOT interchangeable. Make certain the bearing half with the oil groove and hole is installed in the engine block.

The crankshaft is supported in five main bearings. All upper bearing shells in the crankcase have oil grooves and holes. All lower bearing shells **except** for the thrust bearing half have oil grooves and holes (Fig. 64). Crankshaft end play is controlled by a flanged bearing on the number three main bearing journal.

(1) Install the main bearing upper shells with the lubrication groove and oil hole in the engine block (Fig. 65).

(2) Make certain oil holes in block line up with oil hole in bearings and bearing tabs seat in the block tab slots.

CAUTION: Do not get oil on the bedplate mating surface. It will affect the sealer ability to seal the bedplate to cylinder block.

CRANKSHAFT (Continued)

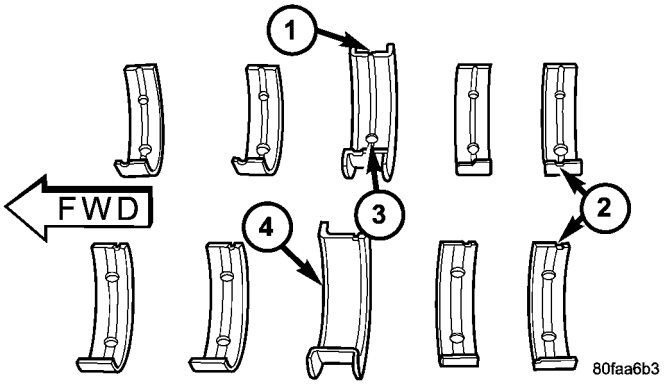

Fig. 64 Main Bearing Identification - Turbo

1 - OIL GROOVE
2 - MAIN BEARINGS
3 - OIL HOLE
4 - LOWER THRUST BEARING PLAIN (NO OIL HOLE OR GROOVE)

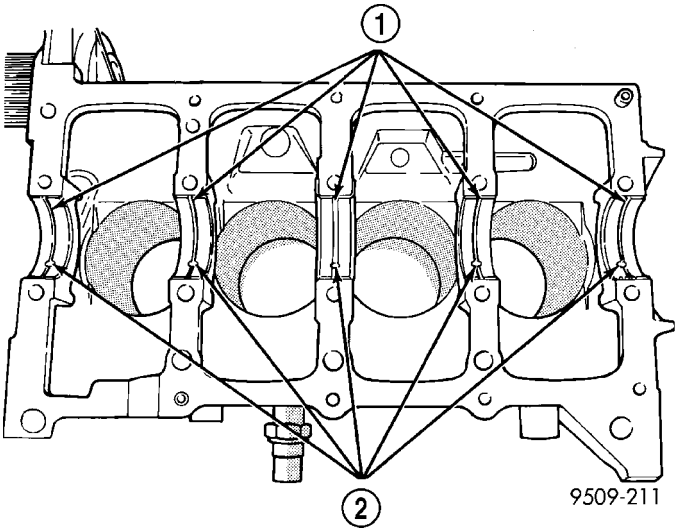

Fig. 65 Installing Main Bearing Upper Shell

1 - LUBRICATION GROOVES
2 - OIL HOLES

(3) Oil the bearings and journals. Install crankshaft in engine block.

CAUTION: Use only the specified anaerobic sealer on the bedplate or damage may occur to the engine.

(4) Apply a 1.5 to 2.0 mm (0.059 to 0.078 in.) bead of Mopar® Bed Plate Sealant to cylinder block as shown in (Fig. 66).

(5) Install lower main bearings into main bearing cap/bedplate. Make certain the bearing tabs are seated into the bedplate slots. Install the main bearing/bedplate into engine block.

(6) Before installing the bolts the threads should be oiled with clean engine oil, wipe off any excess oil.

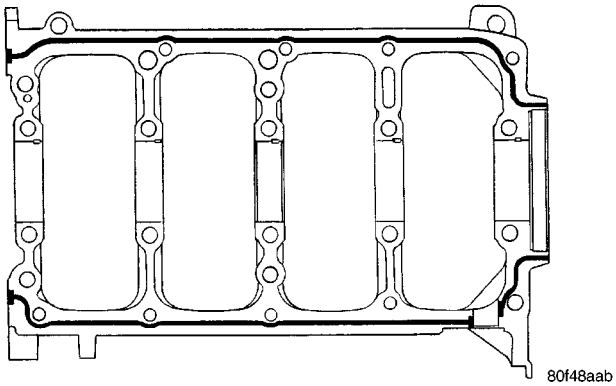

Fig. 66 Bedplate Sealing

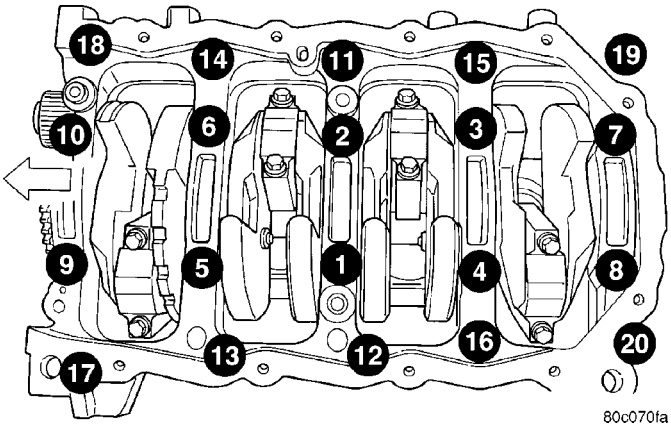

Fig. 67 Bedplate Bolt Torque Sequence

(7) Install main bearing bedplate to engine block bolts 11, 17, and 20 finger tight. Tighten these bolts down together until the bedplate contacts the cylinder block (Fig. 67).

(8) To ensure correct thrust bearing alignment, perform the following steps:

- Step 1: Rotate crankshaft until number 4 piston is at TDC.
- Step 2: Move crankshaft rearward to limits of travel.
- Step 3: Then, move crankshaft forward to limits of travel.
- Step 4: Wedge an appropriate tool between the rear of the cylinder block **(NOT BED PLATE)** and the rear crankshaft counterweight. This will hold the crankshaft in it's furthest forward position.
- Step 5: Install and tighten bolts (1–10) in sequence shown in (Fig. 67) to 41 N·m (30 ft. lbs.).
- Step 6: Remove wedge tool used to hold crankshaft.

(9) Tighten bolts (1–10) again to 41 N·m (30 ft. lbs.) in sequence shown in (Fig. 67).

(10) Install main bearing bedplate to engine block bolts (11–20), and torque each bolt to 28 N·m (250 in. lbs.) in sequence shown in (Fig. 67).

CRANKSHAFT (Continued)

(11) Tighten bolts (1–10) to 75 N·m (55 ft. lbs.) in sequence shown in (Fig. 67).

(12) Tighten bolts (11–20) again to 28 N·m (250 in. lbs.) in sequence shown in (Fig. 67).

(13) After the main bearing bedplate is installed, check the crankshaft turning torque. The turning torque should not exceed 5.6 N·m (50 in. lbs.).

(14) Check crankshaft end play (Refer to 9 - ENGINE/ENGINE BLOCK/CRANKSHAFT - STANDARD PROCEDURE).

(15) Install connecting rod bearings and caps. **Do Not Reuse Connecting Rod Bolts.** Torque connecting rod bolts to 27 N·m (20 ft. lbs.) plus 1/4 turn.

(16) Install balance shafts and housing assembly (Refer to 9 - ENGINE/VALVE TIMING/BALANCE SHAFT - INSTALLATION).

(17) Install the oil pump (Refer to 9 - ENGINE/LUBRICATION/OIL PUMP - INSTALLATION).

(18) Install oil pump pick-up tube. Torque fastener to 23 N·m (200 in. lbs.).

(19) Install the oil pan (Refer to 9 - ENGINE/LUBRICATION/OIL PAN - INSTALLATION).

(20) Install crankshaft position sensor.

(21) Install cylinder head if it was removed (Refer to 9 - ENGINE/CYLINDER HEAD - INSTALLATION).

(22) Install the timing belt rear cover (Refer to 9 - ENGINE/VALVE TIMING/TIMING BELT COVER(S) - INSTALLATION).

(23) Install front crankshaft oil seal and crankshaft sprocket (Refer to 9 - ENGINE/ENGINE BLOCK/CRANKSHAFT OIL SEAL - FRONT - INSTALLATION).

(24) Install the timing belt (Refer to 9 - ENGINE/VALVE TIMING/TIMING BELT AND SPROCKETS - INSTALLATION).

(25) Install the timing belt front covers (Refer to 9 - ENGINE/VALVE TIMING/TIMING BELT COVER(S) - INSTALLATION).

(26) Install engine mount support bracket.

(27) Install crankshaft vibration damper (Refer to 9 - ENGINE/ENGINE BLOCK/VIBRATION DAMPER - INSTALLATION).

(28) Install **NEW** oil filter.

(29) Remove engine from repair stand and position on Special Tools 6135 and 6710 Engine Dolly and Cradle. Install safety straps around the engine to cradle and tighten and lock them into position.

(30) Install crankshaft rear oil seal (Refer to 9 - ENGINE/ENGINE BLOCK/CRANKSHAFT OIL SEAL - REAR - INSTALLATION).

(31) Install drive plate/flex plate. Apply Mopar® Lock & Seal Adhesive to bolt threads and tighten to 95 N·m (70 ft. lbs.).

(32) Attach transaxle to engine. Tighten attaching bolts to 101 N·m (75 ft. lbs.).

(33) Install the engine assembly (Refer to 9 - ENGINE - INSTALLATION).

CRANKSHAFT OIL SEAL - FRONT

REMOVAL

(1) Remove the crankshaft vibration damper. (Refer to 9 - ENGINE/ENGINE BLOCK/VIBRATION DAMPER - REMOVAL)

(2) Remove timing belt. (Refer to 9 - ENGINE/VALVE TIMING/TIMING BELT/CHAIN AND SPROCKETS - REMOVAL)

(3) Remove crankshaft sprocket using Special Tool 6793 and insert C-4685-C2 (Fig. 68).

CAUTION: Do not nick shaft seal surface or seal bore.

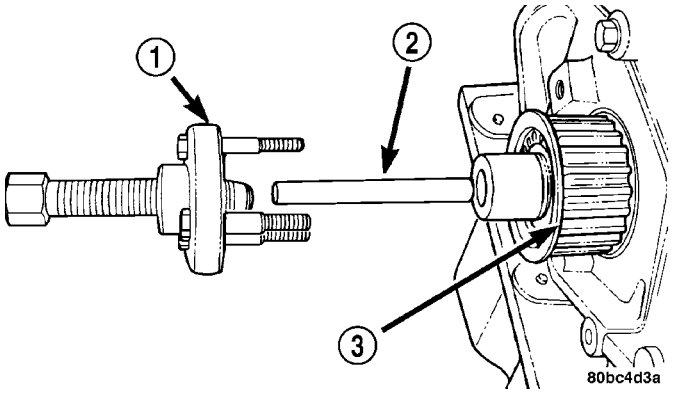

Fig. 68 Crankshaft Sprocket - Removal

1 - SPECIAL TOOL 6793
2 - SPECIAL TOOL C-4685–C2
3 - CRANKSHAFT SPROCKET

(4) Using Tool 6771 to remove front crankshaft oil seal (Fig. 69). Be careful not to damage the seal surface of cover.

INSTALLATION

(1) Install new seal by using Special Tool 6780 (Fig. 70).

(2) Place seal into opening with seal spring towards the inside of engine. Install seal until flush with cover.

(3) Install crankshaft sprocket using Special Tool 6792 (Fig. 71).

(4) Install timing belt. (Refer to 9 - ENGINE/VALVE TIMING/TIMING BELT/CHAIN AND SPROCKETS - INSTALLATION)

(5) Install crankshaft vibration damper. (Refer to 9 - ENGINE/ENGINE BLOCK/VIBRATION DAMPER - INSTALLATION)

CRANKSHAFT OIL SEAL - FRONT (Continued)

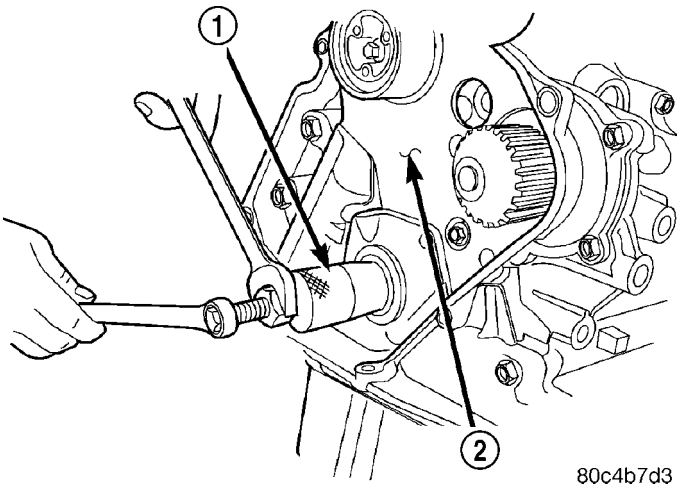

Fig. 69 Front Crankshaft Oil Seal - Removal

1 - SPECIAL TOOL 6771
2 - REAR TIMING BELT COVER

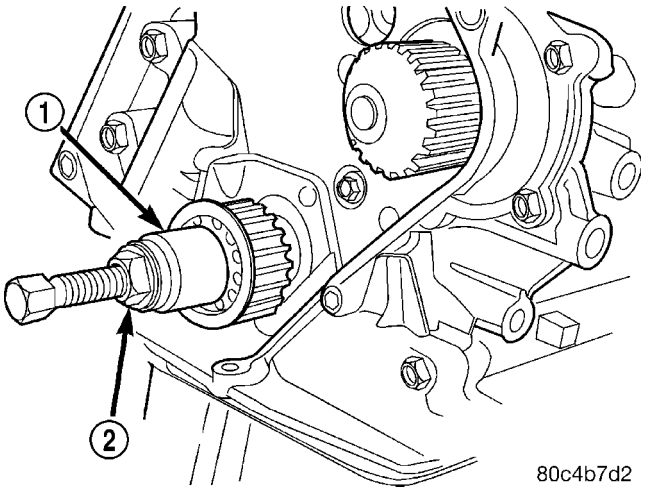

Fig. 71 Crankshaft Sprocket - Installation

1 - SPECIAL TOOL 6792
2 - TIGHTEN NUT TO INSTALL

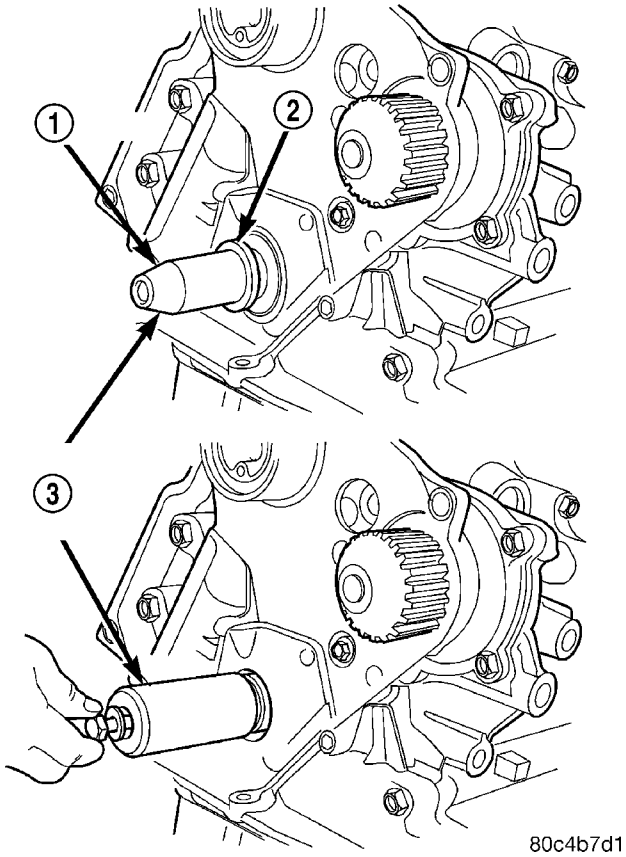

Fig. 70 Crankshaft Front Oil Seal - Installation

1 - PROTECTOR
2 - SEAL
3 - SPECIAL TOOL 6780

CRANKSHAFT OIL SEAL - REAR

REMOVAL

(1) Remove transaxle. Refer to TRANSMISSION/TRANSAXLE - REMOVAL for procedure.

(2) Remove flex plate.

(3) Insert a 3/16 flat bladed screwdriver between the dust lip and the metal case of the crankshaft seal. Angle the screwdriver (Fig. 72) through the dust lip against metal case of the seal. Pry out seal.

CAUTION: Do not permit the screwdriver blade to contact crankshaft seal surface. Contact of the screwdriver blade against crankshaft edge (chamfer) is permitted.

INSTALLATION

CAUTION: If burr or scratch is present on the crankshaft edge (chamfer), cleanup with 400 grit sand paper to prevent seal damage during installation of new seal.

NOTE: When installing seal, no lube on seal is needed.

CRANKSHAFT OIL SEAL - REAR (Continued)

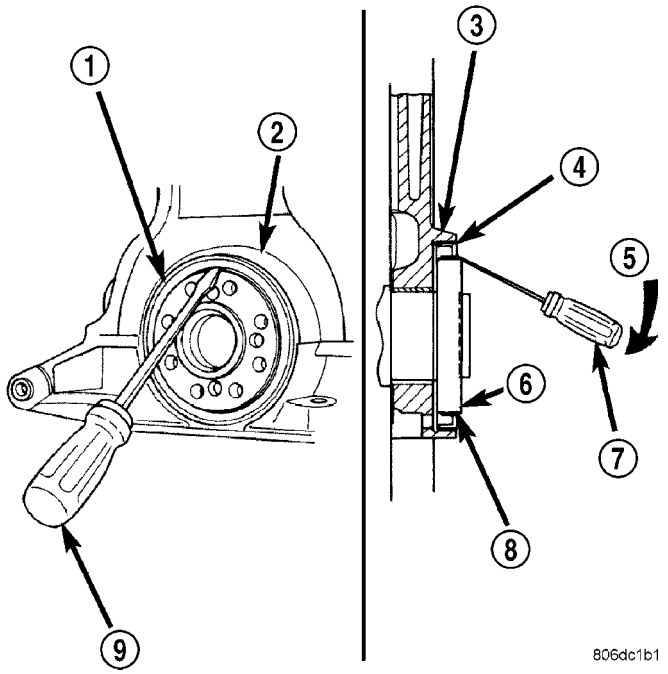

Fig. 72 Rear Crankshaft Oil Seal - Removal

1 - REAR CRANKSHAFT SEAL
2 - ENGINE BLOCK
3 - ENGINE BLOCK
4 - REAR CRANKSHAFT SEAL METAL CASE
5 - PRY IN THIS DIRECTION
6 - CRANKSHAFT
7 - SCREWDRIVER
8 - REAR CRANKSHAFT SEAL DUST LIP
9 - SCREWDRIVER

(1) Place Special Tool 6926-1 Seal Guide on crankshaft (Fig. 73).

(2) Position seal over guide tool (Fig. 73). Guide tool should remain on crankshaft during installation of seal. Ensure that the lip of the seal is facing towards the crankcase during installation.

CAUTION: If the seal is driven into the block past flush, this may cause an oil leak.

(3) Drive the seal into the block using Special Tool 6926-2 and handle C-4171 (Fig. 74) until the tool bottoms out against the block (Fig. 75).

(4) Install flex plate. Apply Mopar® Lock & Seal Adhesive to bolt threads and tighten bolts to 95 N·m (70 ft. lbs.).

(5) Install transaxle. Refer to TRANSMISSION/TRANSAXLE - INSTALLATION for procedure.

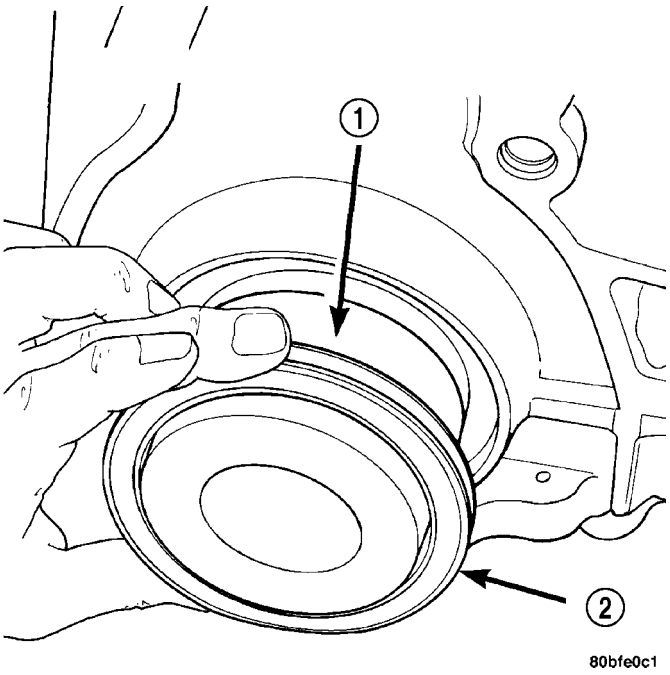

Fig. 73 Rear Crankshaft Seal and Special Tool 6926-1

1 - SPECIAL TOOL 6926–1 PILOT
2 - SEAL

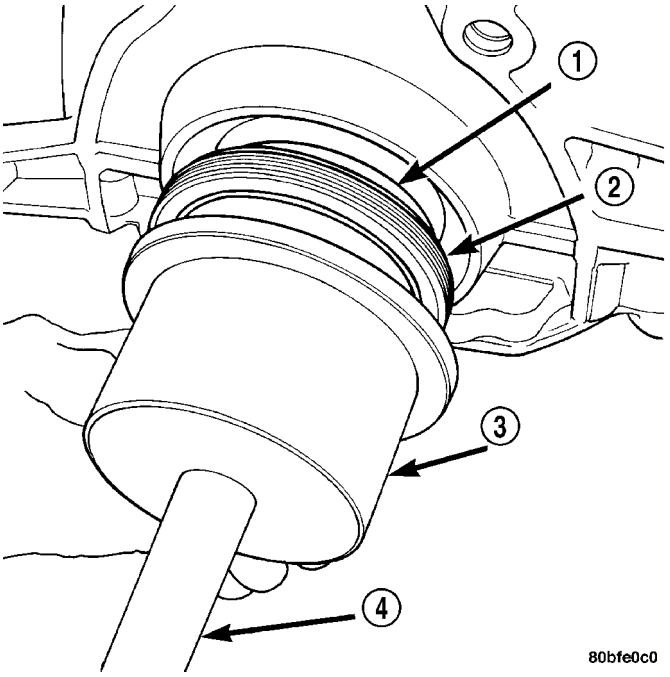

Fig. 74 Crankshaft Seal and Special Tools 6926-2 & C-4171

1 - SPECIAL TOOL 6926–1 PILOT
2 - SEAL
3 - SPECIAL TOOL 6926–2 INSTALLER
4 - SPECIAL TOOL C-4171

CRANKSHAFT OIL SEAL - REAR (Continued)

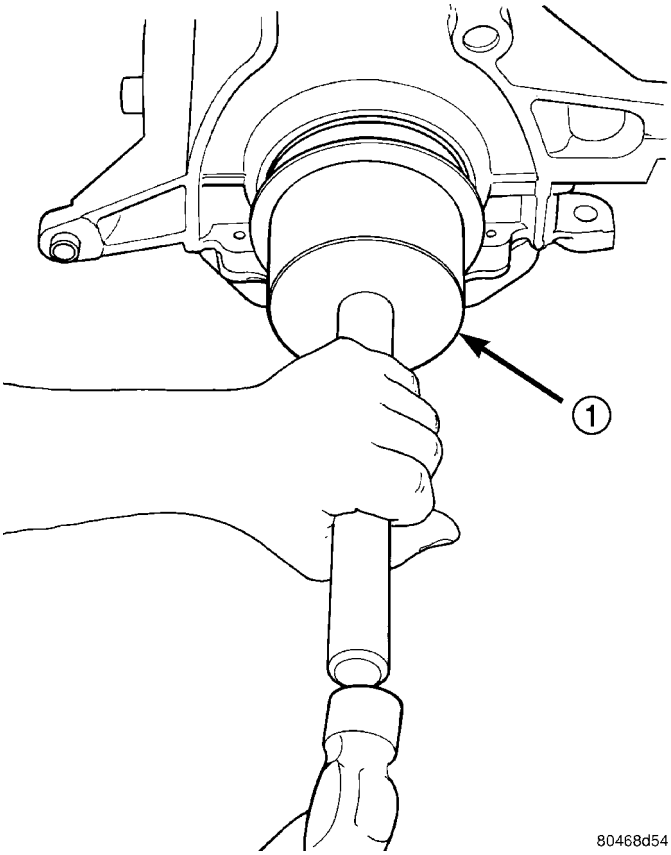

Fig. 75 Rear Crankshaft Seal—Installation

1 - SPECIAL TOOL 6926–2 INSTALLER

PISTON & CONNECTING ROD

DESCRIPTION

Non-Turbo

The pistons are made of a cast aluminum alloy. The pistons have pressed-in pins attached to forged powdered metal connecting rods. The pistons pin is offset 1 mm (0.0394 in.) towards the thrust side of the piston. The connecting rods are a cracked cap design and are not repairable. Hex head cap screws are used to provide alignment and durability in the assembly. The pistons and connecting rods are serviced as an assembly.

Turbo

The pistons are made of a cast aluminum alloy. The pistons have full floating pins attached to forged steel connecting rods. The pistons pin is offset 1 mm (0.0394 in.) towards the thrust side of the piston. The connecting rods are a cracked cap design and are not repairable. Hex head cap screws are used to provide alignment and durability in the assembly. The connecting rod has an oil squirt hole to provide extra cylinder wall lubrication. The pistons and connecting rods are serviced as an assembly.

STANDARD PROCEDURE - PISTON TO CYLINDER BORE FITTING

NOTE: Pistons and cylinder bores should be measured at normal room temperature, 21°C (70°F).

Piston and cylinder wall must be clean and dry. Piston diameter should be measured 90 degrees to piston pin.

Non-Turbo:

- Measurement should be taken approximately 14 mm (0.551 in.) from the bottom of the skirt as shown in (Fig. 76).

Turbo:

- Measurement should be taken approximately 22 mm (0.866 in.) from the bottom of the skirt as shown in (Fig. 77).

Cylinder bores should be measured halfway down the cylinder bore and transverse (measurement location B) to the engine crankshaft center line shown in (Fig. 78). Refer to for Engine Specifications (Refer to 9 - ENGINE - SPECIFICATIONS). Correct piston to bore clearance must be established in order to assure quiet and economical operation.

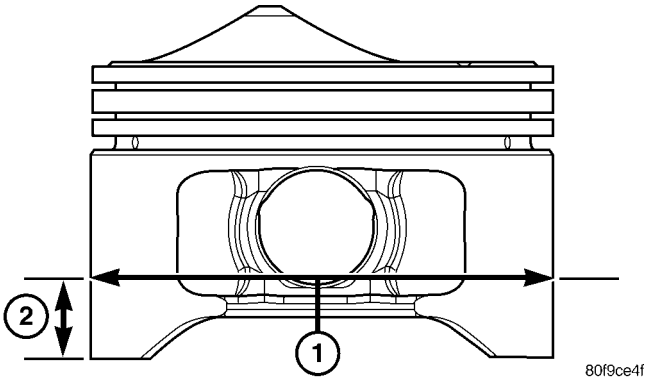

Fig. 76 Piston Measurement

1 - PISTON DIAMETER
2 - 14 mm (0.551 in.)

REMOVAL

(1) Remove cylinder head (Refer to 9 - ENGINE/CYLINDER HEAD - REMOVAL).

(2) Remove oil pan (Refer to 9 - ENGINE/LUBRICATION/OIL PAN - REMOVAL).

(3) Remove Balance Shaft Carrier Assembly (Refer to 9 - ENGINE/VALVE TIMING/BALANCE SHAFT CARRIER - REMOVAL).

(4) Remove top ridge of cylinder bores with a reliable ridge reamer before removing pistons from cylinder block. **Be sure to keep tops of pistons covered during this operation**.

PISTON & CONNECTING ROD (Continued)

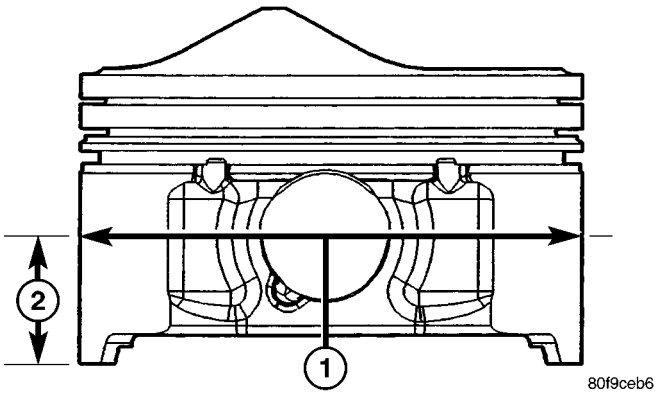

Fig. 77 Piston Measurement - Turbo

1 - PISTON DIAMETER
2 - 22 mm (0.866 in.)

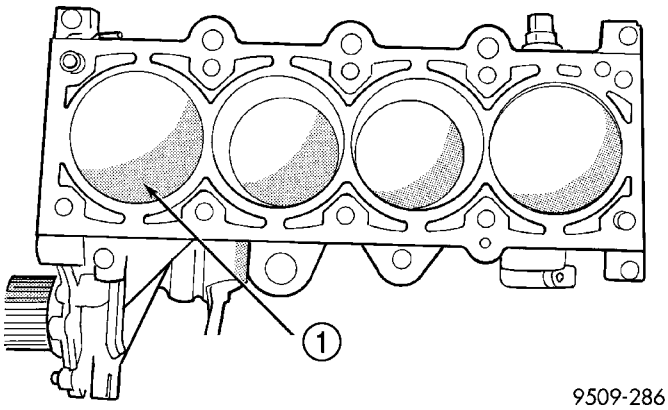

Fig. 79 Piston Markings

1 - DIRECTIONAL ARROW WILL BE IMPRINTED IN THIS AREA

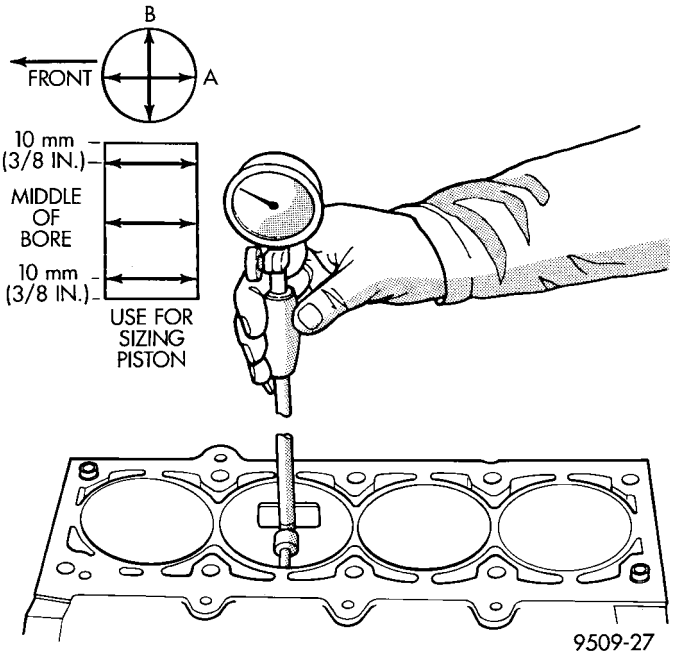

Fig. 78 Checking Cylinder Bore

(5) Pistons have a directional stamping in the front half of the piston facing towards the **front** of engine (Fig. 79).

(6) Pistons and connecting rods must be removed from top of cylinder block. Rotate crankshaft so that each connecting rod is centered in cylinder bore.

(7) Using a permanent ink or paint marker, identify cylinder number on each connecting rod cap (Fig. 80).

CAUTION: DO NOT use a number stamp or a punch to mark connecting rods. Damage to connecting rod could occur.

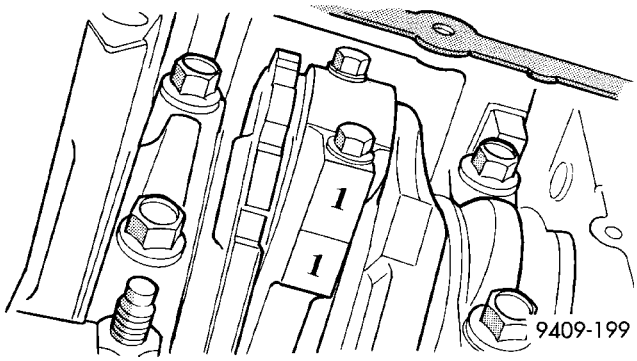

Fig. 80 Identify Connecting Rod to Cylinder

(8) Remove connecting rod bolts and cap. Care should be taken not to damage the fracture rod and cap surfaces.

NOTE: Do not reuse connecting rod bolts.

CAUTION: Care must be taken not to damage the fractured rod and cap joint surfaces, as engine damage many occur.

(9) To protect crankshaft journal and fractured rod surfaces, install Special Tool 8189, connecting rod guides onto connecting rod (Fig. 81). Carefully push each piston and rod assembly out of cylinder bore.

NOTE: On Turbocharger equipped engines, be careful not to damage the oil jet assembly when removing piston/connecting rod (Fig. 82).

(10) Remove Special Tool 8189, connecting rod guides and re-install bearing cap on the mating rod.

NOTE: Piston and rods are serviced as an assembly.

PISTON & CONNECTING ROD (Continued)

(11) Repeat procedure for each piston and connecting rod assembly.

(12) Remove piston rings (Refer to 9 - ENGINE/ ENGINE BLOCK/PISTON RINGS - REMOVAL).

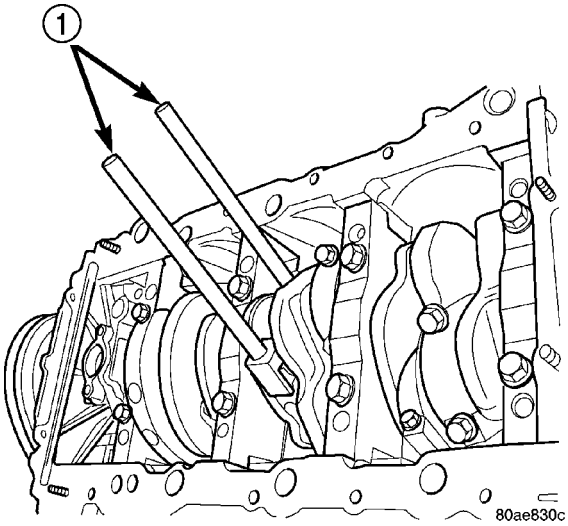

Fig. 81 Connecting Rod Guides—Typical

1 - SPECIAL TOOL 8189 CONNECTING ROD GUIDES

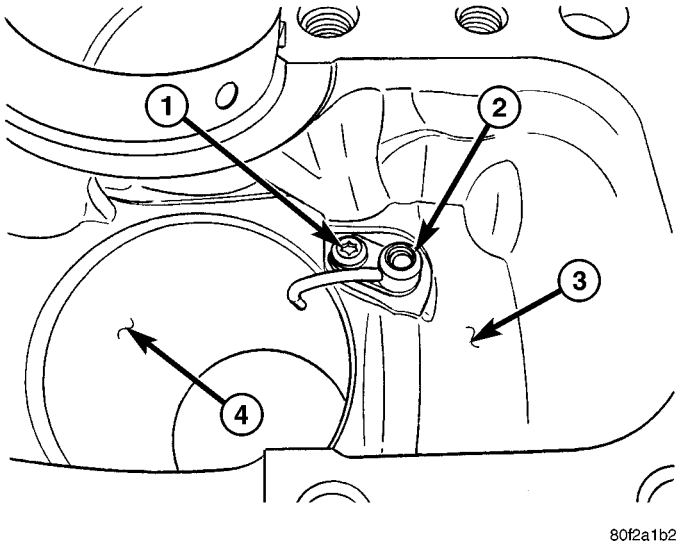

Fig. 82 Oil Jet Fastener - 2.4L Turbo

1 - FASTENER - 12 N·m (105 in. lbs.)
2 - OIL JET
3 - ENGINE BLOCK
4 - CYLINDER WALL

INSTALLATION

(1) Install piston rings on piston (Refer to 9 - ENGINE/ENGINE BLOCK/PISTON RINGS - INSTALLATION)

(2) Before installing pistons and connecting rod assemblies into the bore, be sure that compression ring gaps are staggered so that neither is in line with oil ring rail gap (Fig. 83).

(3) Before installing the ring compressor, make sure the oil ring expander ends are butted and the rail gaps located as shown in (Fig. 83). As viewed from top.

(4) Immerse the piston head and rings in clean engine oil, slide the ring compressor, over the piston (Fig. 84). **Be sure position of rings does not change during this operation** .

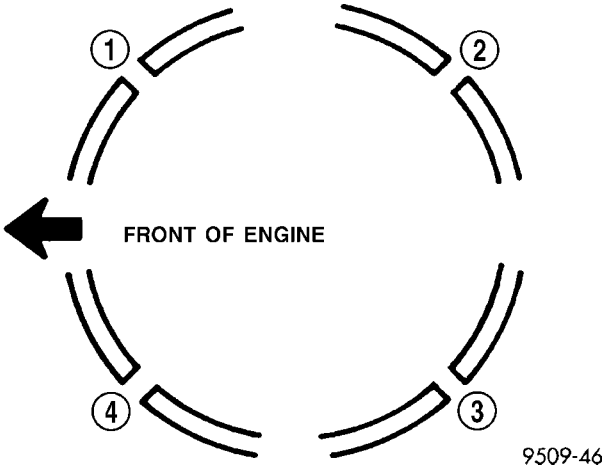

Fig. 83 Piston Ring End Gap Position

1 - GAP OF LOWER SIDE RAIL
2 - NO. 1 RING GAP
3 - GAP OF UPPER SIDE RAIL
4 - NO. 2 RING GAP AND SPACER EXPANDER GAP

(5) The directional stamp on the piston should face toward the front of the engine (Fig. 79).

(6) Rotate crankshaft so that the connecting rod journal is on the center of the cylinder bore. Lubricate connecting rod journal with clean engine oil.

(7) Install connecting rod upper bearing half into connecting rod. Install Special Tool 8189, connecting rod guides onto connecting rod (Fig. 81).

(8) Tap the piston down in cylinder bore, using a hammer handle. At the same time, guide connecting rod into position on connecting rod journal.

(9) Remove Special Tool 8189, connecting rod guides.

NOTE: The connecting rod cap bolts should not be reused.

(10) Before installing the **NEW** bolts, the threads should be coated with clean engine oil.

(11) Install connecting rod lower bearing half into connecting rod cap. Install connecting rod cap.

(12) Install each bolt finger tight then alternately torque each bolt to assemble the cap properly.

(13) Tighten the connecting rod bolts using the 2 step torque-turn method. Tighten according to the following values:

PISTON & CONNECTING ROD (Continued)

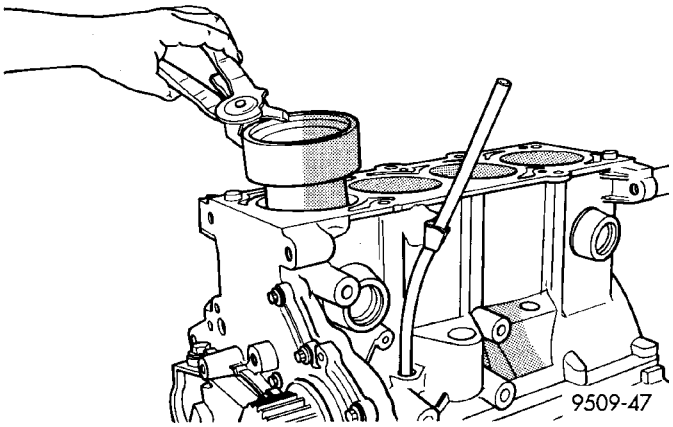

Fig. 84 Piston—Installation

CAUTION: Do not use a torque wrench for the second step.

1. Tighten the bolts to 27 N·m (20 ft. lbs.).
2. Tighten the connecting rod bolts an additional **1/4 TURN.**

(14) Using a feeler gauge, check connecting rod side clearance (Fig. 85). (Refer to 9 - ENGINE - SPECIFICATIONS) for connecting rod side clearance.

(15) Install Balance Shaft Carrier Assembly (Refer to 9 - ENGINE/VALVE TIMING/BALANCE SHAFT CARRIER - INSTALLATION).

(16) Install oil pan (Refer to 9 - ENGINE/LUBRICATION/OIL PAN - INSTALLATION).

(17) Install cylinder head (Refer to 9 - ENGINE/CYLINDER HEAD - INSTALLATION).

CONNECTING ROD BEARINGS

STANDARD PROCEDURE

CONNECTING ROD - FITTING

(1) For measuring connecting rod bearing clearance procedure and use of Plastigage(Refer to 9 - ENGINE - STANDARD PROCEDURE). For bearing clearance refer to Engine Specifications. (Refer to 9 - ENGINE - SPECIFICATIONS)

NOTE: The rod bearing bolts should not be reused.

(2) Before installing the **NEW** bolts the threads should be oiled with clean engine oil.

(3) Install each bolt finger tight then alternately torque each bolt to assemble the cap properly.

(4) Tighten the connecting rod bolts using the 2 step torque-turn method. Tighten according to the following values:

CAUTION: Do not use a torque wrench for the second step.

1. Tighten the bolts to 27 N·m (20 ft. lbs.).
2. Tighten the connecting rod bolts an additional **1/4 TURN.**

(5) Using a feeler gauge, check connecting rod side clearance (Fig. 85). Refer to clearance specifications (Refer to 9 - ENGINE - SPECIFICATIONS).

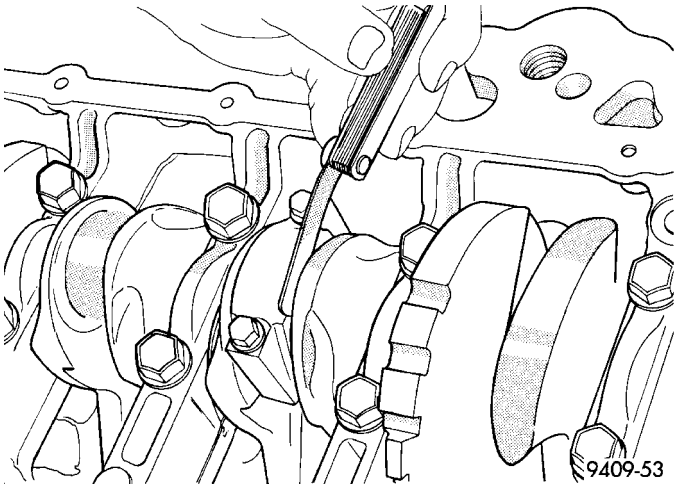

Fig. 85 Connecting Rod Side Clearance

PISTON RINGS

STANDARD PROCEDURE

PISTON RING - FITTING

(1) Wipe cylinder bore clean. Insert ring and push down with piston to ensure it is square in bore. The ring gap measurement must be made with the ring positioning at least 12 mm (0.50 inch) from bottom of cylinder bore. Check gap with feeler gauge (Fig. 86). Refer to Engine Specifications.

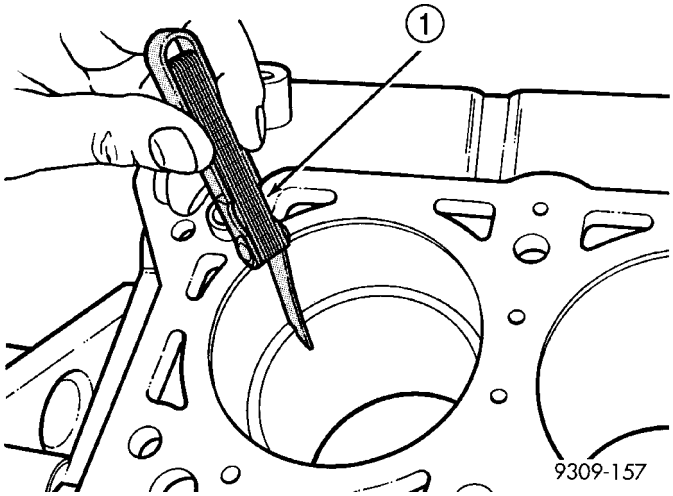

Fig. 86 Piston Ring Gap

1 - FEELER GAUGE

PISTON RINGS (Continued)

(2) Check piston ring to groove side clearance (Fig. 87). Refer to Engine Specifications.

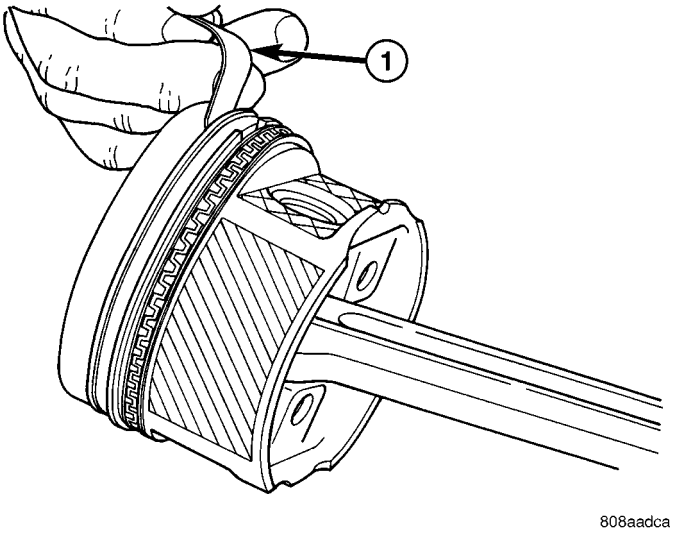

Fig. 87 Piston Ring Side Clearance

1 - FEELER GAUGE

REMOVAL

(1) Using a suitable ring expander, remove upper and intermediate piston rings (Fig. 88).

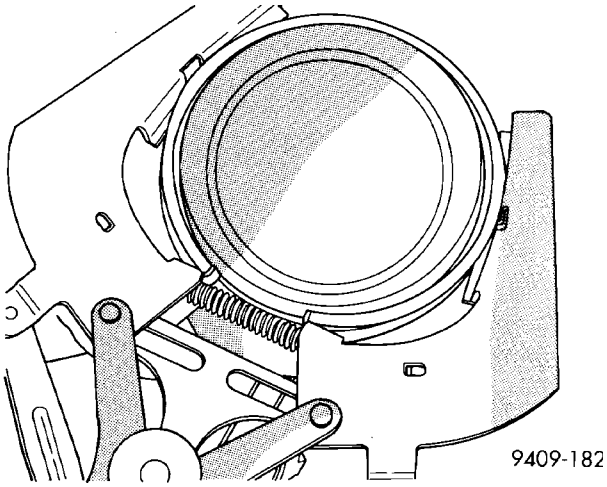

Fig. 88 Piston Rings—Removing and Installing

(2) Remove the upper oil ring side rail, lower oil ring side rail and then oil ring expander from piston.

(3) Clean ring grooves of any carbon deposits.

INSTALLATION

NOTE: The identification mark on face of upper and intermediate piston rings must point toward top of piston.

Install rings with manufacturers identification mark facing up, to the top of the piston (Fig. 89).

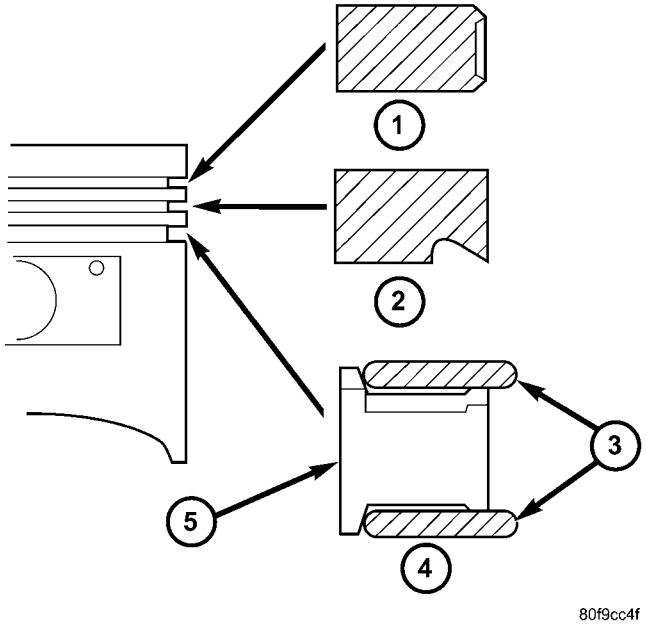

Fig. 89 Piston Ring Installation

1 - NO. 1 PISTON RING
2 - NO. 2 PISTON RING
3 - SIDE RAIL
4 - OIL RING
5 - SPACER EXPANDER

CAUTION: Install piston rings in the following order:

1. Oil ring expander.
2. Upper oil ring side rail.
3. Lower oil ring side rail.
4. No. 2 Intermediate piston ring.
5. No. 1 Upper piston ring.

(1) Install oil ring expander (Fig. 89).

(2) Install upper side rail first and then the lower side rail. Install the side rails by placing one end between the piston ring groove and the oil ring expander. Hold end firmly and press down the portion to be installed until side rail is in position. **Do not use a piston ring expander (Fig. 90).**

(3) Install No. 2 piston ring and then No. 1 piston ring (Fig. 89).

(4) Position piston ring end gaps as shown in (Fig. 91).

PISTON RINGS (Continued)

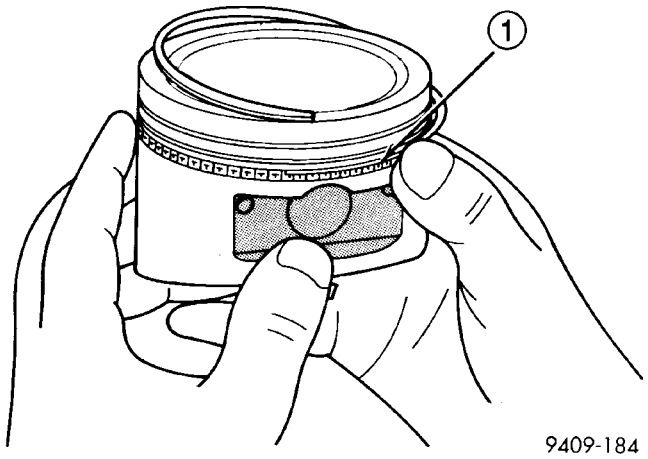

Fig. 90 Installing Side Rail

1 - SIDE RAIL END

(5) Position oil ring expander gap at least 45° from the side rail gaps but **not** on the piston pin center or on the thrust direction. Staggering ring gap is important for oil control.

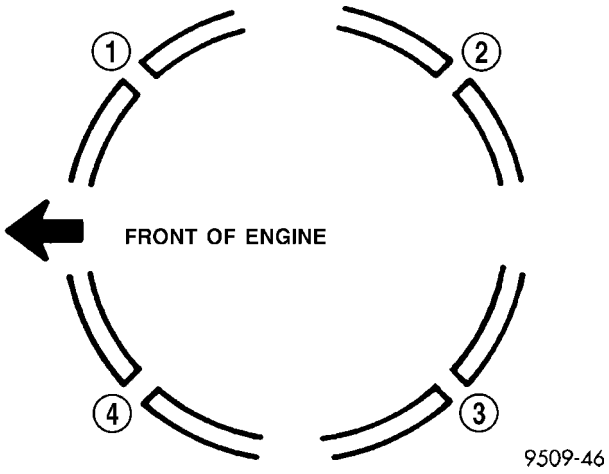

Fig. 91 Piston Ring End Gap Position

1 - GAP OF LOWER SIDE RAIL
2 - NO. 1 RING GAP
3 - GAP OF UPPER SIDE RAIL
4 - NO. 2 RING GAP AND SPACER EXPANDER GAP

STRUCTURAL COLLAR

REMOVAL

STRUCTURAL COLLAR—AUTOMATIC TRANSAXLE EQUIPPED

(1) Raise vehicle on hoist.

(2) Remove bolts attaching bending strut to engine and transaxle (Fig. 92).

(3) Remove bolts attaching collar and strut to engine, oil pan, and transaxle (Fig. 92). Remove strut and collar.

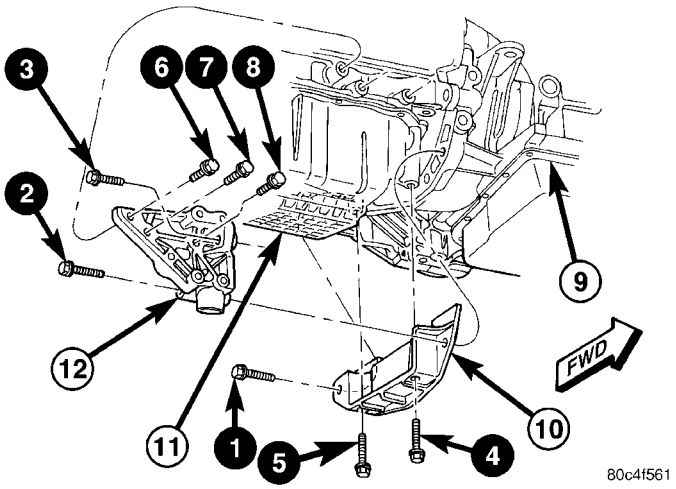

Fig. 92 Structural Collar and Bending Strut—(Automatic Transaxle Equipped)

1–8 – BOLT TIGHTENING SEQUENCE
9 – TRANSAXLE
10 – COLLAR
11 – OIL PAN
12 – STRUT

STRUCTURAL COLLAR—MANUAL TRANSAXLE EQUIPPED

(1) Raise vehicle on hoist.

(2) Remove bolts attaching bending strut to engine and transaxle (Fig. 93). Remove strut.

(3) Remove bolts attaching collar and clutch slave cylinder to transaxle (Fig. 93).

(4) Remove remaining bolts attaching collar to oil pan and transaxle (Fig. 93). Remove collar.

INSTALLATION

STRUCTURAL COLLAR—AUTOMATIC TRANSAXLE EQUIPPED

CAUTION: Torque procedure for the structural collar and bending strut must be followed or damage could occur to oil pan, collar, and/or bending strut.

(1) Perform the following steps for installing structural collar and bending strut. Refer to (Fig. 92):

- Step 1: Place collar into position between transaxle and oil pan. Install collar to transaxle bolt (1), **hand start only**.
- Step 2: Position power steering hose support bracket (Fig. 94) and install collar to oil pan bolt (4), **hand tight only.**
- Step 3: Position bending strut in place and **hand start only** bolt (3) into the upper transaxle hole.
- Step 4: Install bolt (2), through strut and collar, **hand start only**.

STRUCTURAL COLLAR (Continued)

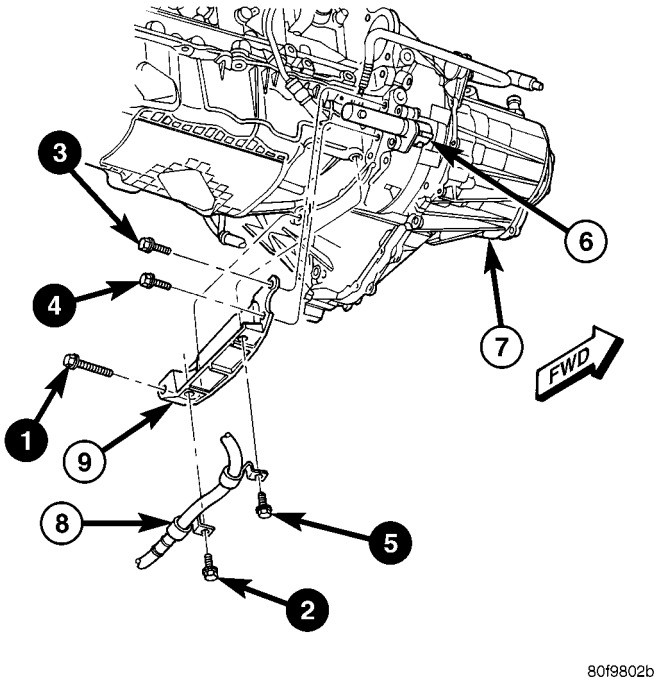

Fig. 93 Structural Collar and Bending Strut - (Manual Transaxle Equipped)

1–5 – BOLT TIGHTENING SEQUENCE
6 – HYDRAULIC CLUTCH SLAVE CYLINDER
7 – TRANSAXLE
8 – POWER STEERING HOSE
9 – COLLAR

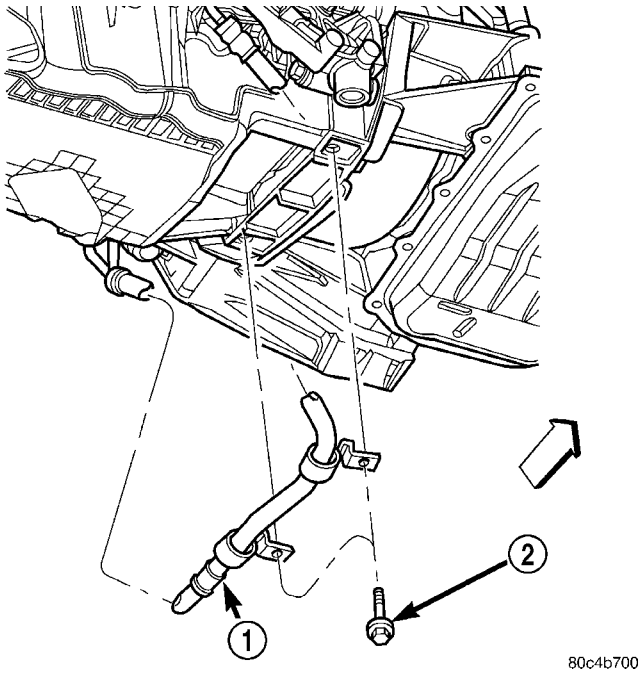

Fig. 94 Power Steering Hose To Structural Collar

1 - POWER STEERING HOSE
2 - BOLT

• Step 5: Install bolt (6), strut to cylinder block, **hand tight only.**

• Step 6: Position power steering hose support bracket (Fig. 94) and install the remaining collar to oil pan bolt (5), **hand tight only.**

• Step 7: Final torque collar to transaxle bolts (1–3), to 101 N·m (75 ft. lbs.)

• Step 8: Install bolts (7) and (8), through strut and into cylinder block.

• Step 9: Final torque bolts (4–8) to 61 N·m (45 ft. lbs.).

(2) Lower vehicle.

STRUCTURAL COLLAR—MANUAL TRANSAXLE EQUIPPED

CAUTION: Torque procedure for the structural collar and bending strut must be followed or damage could occur to oil pan, collar, and/or bending strut.

(1) Perform the following steps for installing structural collar and bending strut. Refer to (Fig. 93):

• Step 1: Place collar into position between transaxle and oil pan. Install collar to transaxle bolt (1), **hand start only**.

• Step 2: Position power steering hose support bracket (Fig. 93) and install collar to oil pan bolt (2), **hand tight only**.

• Step 3: Position clutch slave cylinder into mounting position and install bolts (3) and (4) **hand tight only**.

• Step 4: Position power steering hose support bracket and install the remaining collar to oil pan bolt (5) **hand tight only**.

• Step 5: Final torque all bolts in sequence shown in (Fig. 93) to the following torque values:

- Bolt (1) to 101 N·m (75 ft. lbs.)
- Bolts (2) and (5) to 61 N·m (45 ft. lbs.)
- Bolts (3) and (4) to 28 N·m (20 ft. lbs.)

(2) Lower vehicle.

VIBRATION DAMPER

REMOVAL

(1) Remove accessory drive belts (Refer to 7 - COOLING/ACCESSORY DRIVE/DRIVE BELTS - REMOVAL).

(2) Remove crankshaft damper bolt.

(3) Remove damper by using Special Tool 1026 and Insert 6827A (Fig. 95).

INSTALLATION

(1) Install crankshaft damper using Special Tool 6792 (M12 1.75 x 150 mm bolt, washer, thrust bearing and nut).

VIBRATION DAMPER (Continued)

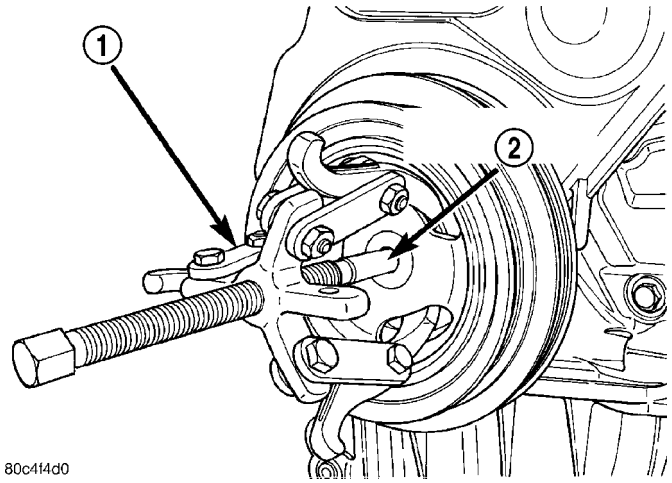

Fig. 95 Crankshaft Damper—Removal

1 - SPECIAL TOOL 1026 3 - JAW PULLER
2 - SPECIAL TOOL 6827A INSERT

NOTE: Lubricate the threads of the M12 1.75 x 150 mm bolt using Mopar® Nickel Anti-seize Compound or equivalent, before beginning to press the damper on.

(2) Install crankshaft damper bolt and tighten to 136 N·m (100 ft. lbs.) (Fig. 96).

(3) Install accessory drive belts (Refer to 7 - COOLING/ACCESSORY DRIVE/DRIVE BELTS - INSTALLATION).

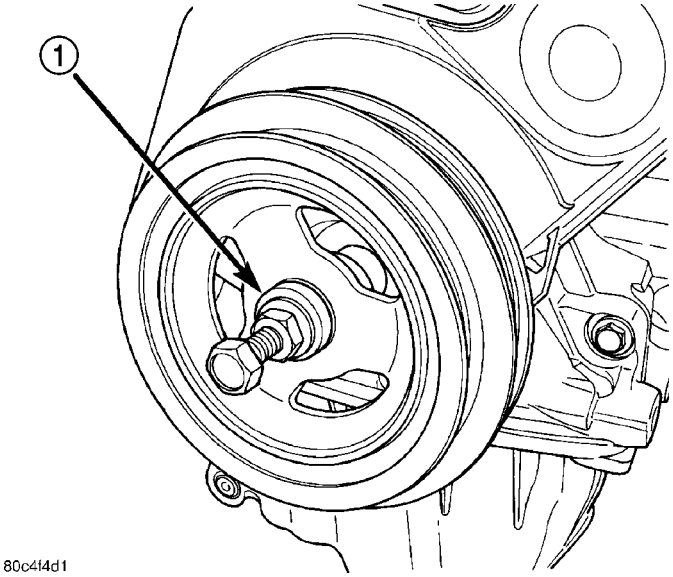

Fig. 96 Crankshaft Damper—Installation

1 - SPECIAL TOOL 6792

ENGINE MOUNTING

DESCRIPTION

The engine mounting system (Fig. 98) and (Fig. 100) consists of a four-point system utilizing two load-carrying mounts and two torque struts. The load-carrying mounts are located on each frame rail. The right mount is a hydro-elastic mount and left mount is a conventional elastomeric isolator. The two torque controlling struts are attached at the front of the engine, straddling the right side load-carrying mount. The upper strut connects to the suspension strut tower and the lower to the suspension cross-member.

OPERATION

The four-point engine mounting system minimizes the transmission of structure-borne engine noise to the passenger compartment. The load-carrying right and left mounts dampen and isolate vertical motion and vibration. The two struts absorbs torque reaction forces and torsional vibrations.

LEFT MOUNT

REMOVAL

(1) Remove air cleaner assembly.

(2) Disconnect negative cable from battery.

(3) Remove bolts attaching the power distribution center (PDC) bracket to left mount and battery tray (Fig. 97).

(4) Support transaxle with a suitable jack.

(5) Remove mount to transaxle bolts (Fig. 98).

(6) Remove left mount bracket to body frame rail fasteners (Fig. 98).

(7) Remove mount.

INSTALLATION

(1) Install engine mount bracket to body frame rail and tighten fasteners to 28 N·m (250 in. lbs.) (Fig. 98).

(2) Position engine/transaxle for installation of mount to transaxle bolts. Install and tighten bolts to 68 N·m (50 ft. lbs.) (Fig. 98).

(3) Remove jack from under transaxle.

(4) Install bolts attaching the power distribution center (PDC) bracket to left mount and battery tray (Fig. 97).

(5) Connect negative cable to battery.

(6) Install air cleaner assembly.

LEFT MOUNT (Continued)

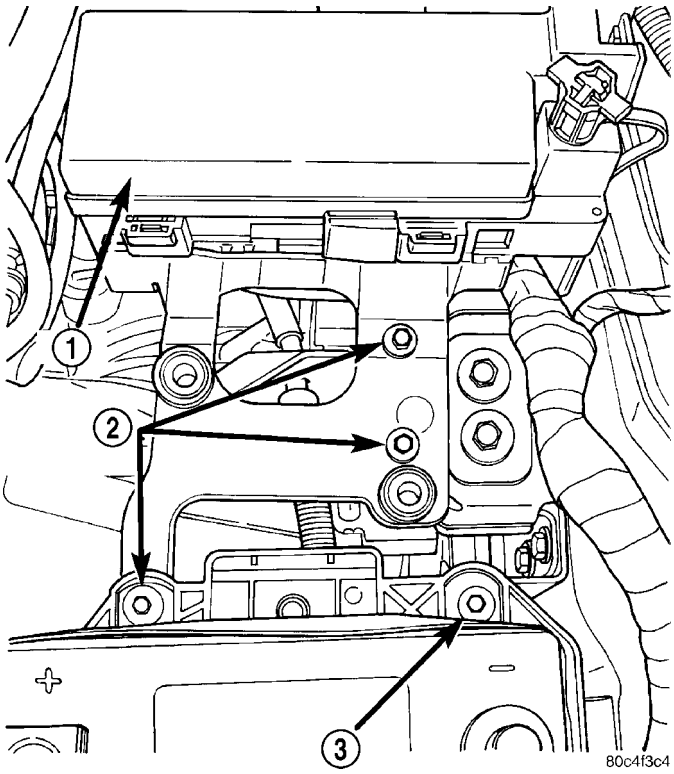

Fig. 97 PDC Bracket Attaching Bolts

1 - PDC
2 - PDC BRACKET BOLTS
3 - BATTERY TRAY BOLT

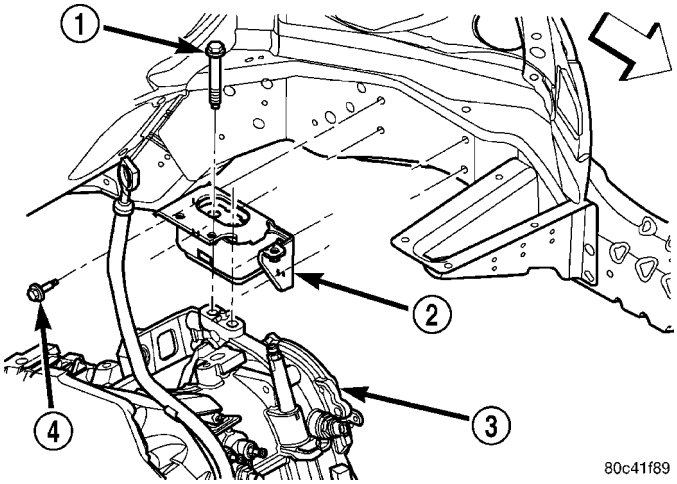

Fig. 98 Left Mount

1 - BOLT
2 - LEFT MOUNT
3 - TRANSAXLE
4 - BOLT

RIGHT MOUNT

REMOVAL

(1) Remove the engine assembly for the required clearance to access the engine mount (Refer to 9 - ENGINE - REMOVAL).

NOTE: The right engine mount attaching holes are slightly oversize to compensate for manufacturing tolerances. The mount has been set at the manufacturing plant for proper powertrain alignment. Therefore, it is necessary to mark the position of the mount before the attaching bolts are loosened.

(2) Using a permanent ink marker or equivalent, mark the position of engine mount to the body frame rail.

(3) Remove bolts attaching mount to body (Fig. 99).

(4) Remove mount.

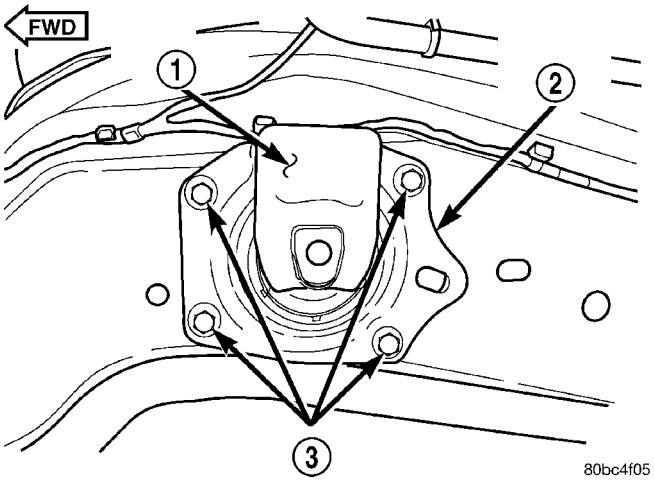

Fig. 99 Engine Mount—Right

1 - SNUBBER PAD
2 - RIGHT ENGINE MOUNT
3 - BOLTS

INSTALLATION

(1) Position mount into the original position on body frame rail (Fig. 99).

NOTE: Engine mount must be installed in the original position on body frame rail. If mount was not marked or frame rail was replaced, perform the following procedure.

(2) Perform the following procedure if the mount position was not previously marked, or the frame rail was replaced:

(a) Insert new mount loosely in frame rail.

(b) Align the four holes in the mount with the mating holes in the rail such that the holes are

RIGHT MOUNT (Continued)

concentric (frame rail holes centered in the mount holes).

(c) Using a permanent ink marker or equivalent, mark the position of engine mount to the body frame rail while maintaining mounting hole concentricity.

(3) Ensure the mount maintains originally marked position and install mount bolts. Tighten bolts to 28 N·m (250 in. lbs.) (Fig. 99).

(4) Install the engine assembly (Refer to 9 - ENGINE - INSTALLATION).

TORQUE STRUT

REMOVAL

REMOVAL - UPPER

(1) Remove bolts attaching upper torque strut to shock tower bracket and engine mount bracket (Fig. 100).

(2) Remove timing belt front upper cover (if A/C equipped).

(3) Remove the upper torque strut.

REMOVAL - LOWER

(1) Raise vehicle on hoist.

(2) Remove accessory drive belt splash shield (Fig. 101).

(3) Remove pencil strut (Fig. 102).

(4) Remove bolts attaching lower torque strut to crossmember and strut bracket (Fig. 100).

(5) Remove lower torque strut.

INSTALLATION

INSTALLATION - UPPER

(1) Position the upper torque strut into mounting location (Fig. 100).

(2) Move torque strut aside (towards right fender) and install timing belt front upper cover (if A/C equipped).

(3) Install the torque strut mounting bolts and perform the torque strut adjustment procedure (Refer to 9 - ENGINE/ENGINE MOUNTING/TORQUE STRUT - ADJUSTMENTS).

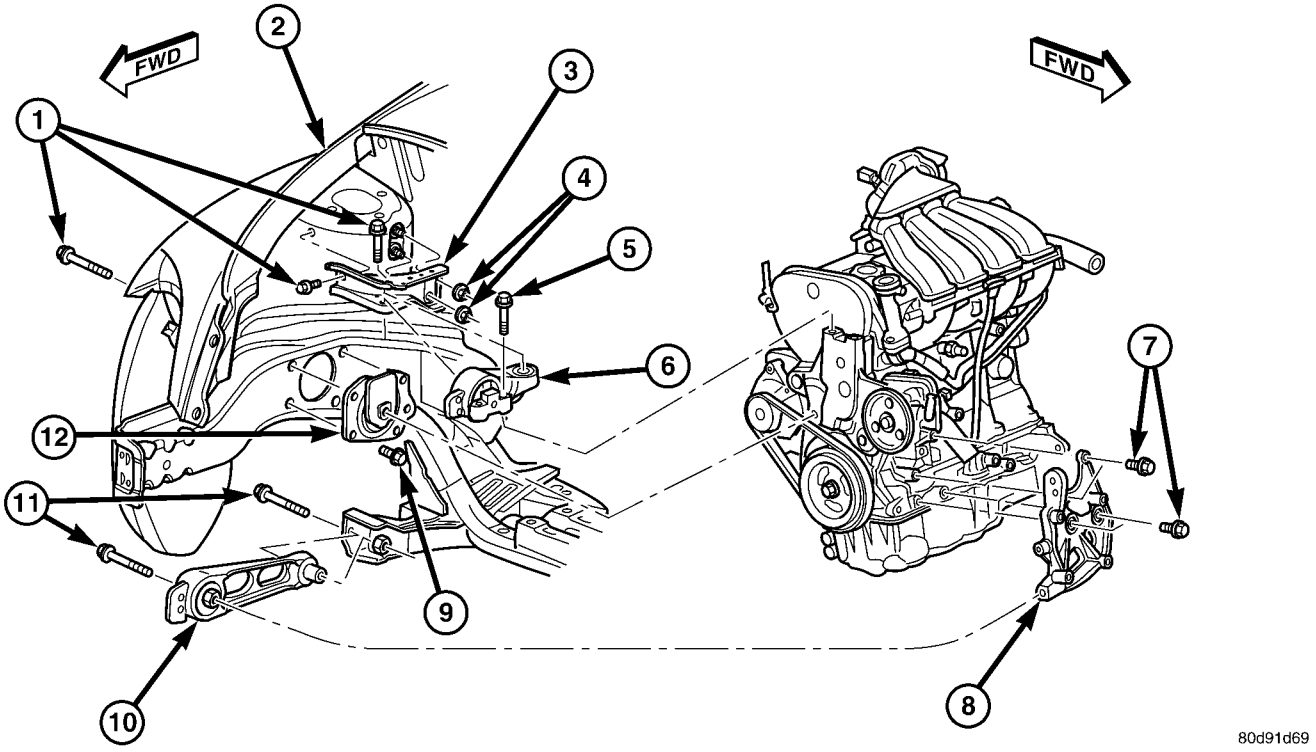

Fig. 100 Engine Mounting - Right Side

1 - BOLT
2 - RIGHT FENDER
3 - UPPER TORQUE STRUT BRACKET
4 - NUTS
5 - BOLT
6 - UPPER TORQUE STRUT
7 - BOLT
8 - LOWER TORQUE STRUT BRACKET
9 - BOLT
10 - LOWER TORQUE STRUT
11 - BOLT
12 - RIGHT ENGINE MOUNT

TORQUE STRUT (Continued)

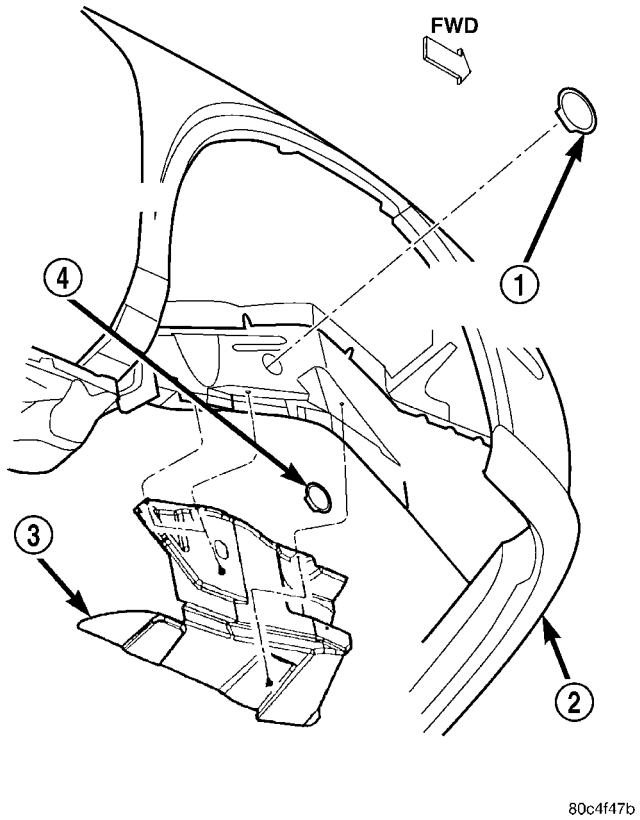

Fig. 101 Splash Shield

1 - RIGHT MOUNT BOLT ACCESS PLUG
2 - FASCIA
3 - SPLASH SHIELD
4 - CRANKSHAFT BOLT ACCESS PLUG

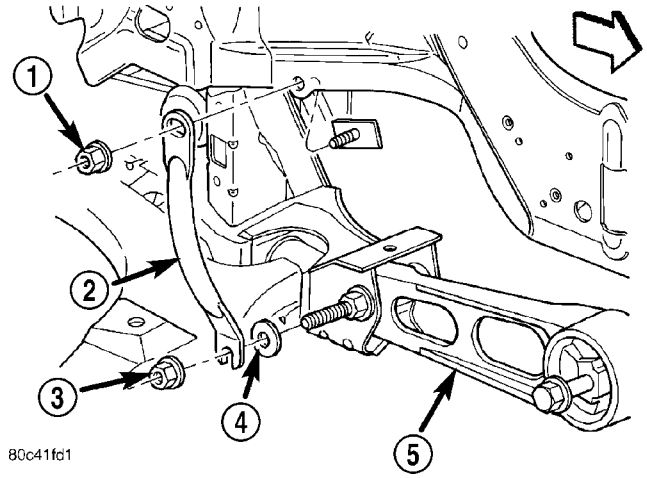

Fig. 102 Pencil Strut

1 - NUT
2 - PENCIL STRUT
3 - NUT
4 - FLAT WASHER
5 - LOWER TORQUE STRUT

INSTALLATION - LOWER

(1) Position lower torque strut into mounting locations.

(2) Install mounting bolts and perform torque strut adjustment procedure (Refer to 9 - ENGINE/ENGINE MOUNTING/TORQUE STRUT - ADJUSTMENTS).

(3) Install pencil strut and tighten nuts to 58 N·m (43 ft. lbs.) (Fig. 102).

(4) Install accessory belt splash shield (Fig. 101) and lower vehicle.

ADJUSTMENTS

ENGINE TORQUE STRUT ADJUSTMENT

The upper and lower torque struts need to be adjusted together to assure proper engine positioning and engine mount loading. Whenever a torque strut bolt(s) is loosened, this procedure must be performed.

(1) Remove accessory drive belt splash shield (Fig. 101).

(2) Remove pencil strut (Fig. 102).

(3) Loosen the upper and lower torque strut attaching bolt at the suspension crossmember and shock tower bracket (Fig. 100).

(4) The engine position may now be adjusted by positioning a suitable floor jack on the forward edge of the transmission bell housing (Fig. 103).

NOTE: The floor jack must be positioned as shown in (Fig. 103) to prevent minimal upward lifting of the engine.

(5) With the engine supported, remove the upper and lower torque strut attachment bolt(s) at shock tower bracket and suspension crossmember (Fig. 100). Verify that the torque struts are free to move within the shock tower bracket and crossmember. Reinstall the torque strut bolt(s), but do not tighten.

(6) Carefully apply upward force, allowing the upper engine to rotate rearward until the distance between the center of the rearmost attaching bolt on the engine mount bracket (point “A”) and the center of the hole on the shock tower bracket (point “B”) is 119 mm (4.70 in.) (Fig. 104).

CAUTION: The engine must be held in position with jack until both the upper and lower torque strut bolts are tightened.

(7) With the engine held at the proper position, tighten both the upper and lower torque strut bolts to 115 N·m (85 ft. lbs.) (Fig. 100).

(8) Remove the floor jack.

(9) Install pencil strut and tighten nuts to 58 N·m (43 ft. lbs.) (Fig. 102).

TORQUE STRUT (Continued)

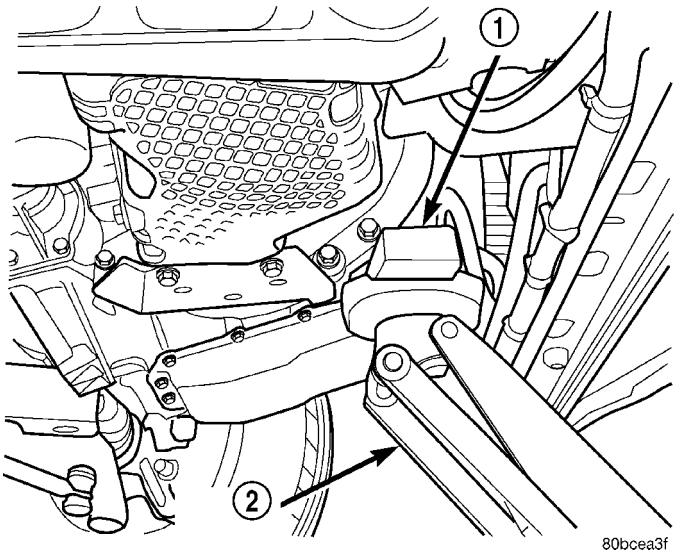

Fig. 103 Floor Jack Positioning

1 - WOOD BLOCK
2 - FLOOR JACK

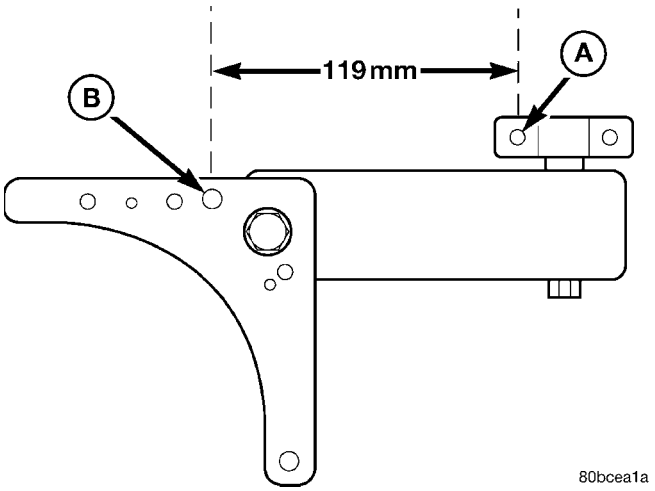

Fig. 104 Engine Position Measurement

(10) Install accessory drive belt splash shield (Fig. 101).

LUBRICATION

DESCRIPTION

The lubrication system is a full-flow filtration, pressure feed type. The oil pump is mounted in the front engine cover and driven by the crankshaft.

OPERATION

Engine oil drawn up through the pickup tube and is pressurized by the oil pump and routed through the full-flow filter to the main oil gallery running the length of the cylinder block. A diagonal hole in each bulkhead feeds oil to each main bearing. Drilled passages within the crankshaft route oil from main bearing journals to connecting rod journals. Balance shaft lubrication is provided through an oil passage from the number one main bearing cap through the balance shaft carrier support leg. This passage directly supplies oil to the front bearings and internal machined passages in the shafts that routes oil from front to the rear shaft bearing journals. A vertical hole at the number five bulkhead routes pressurized oil through a restrictor (integral to the cylinder head gasket) up past a cylinder head bolt to an oil gallery running the length of the cylinder head. The camshaft journals are partially slotted to allow a predetermined amount of pressurized oil to pass into the bearing cap cavities. Lubrication of the camshaft lobes are provided by small holes in the camshaft bearing caps that are directed towards each lobe. Oil returning to the pan from pressurized components supplies lubrication to the valve stems. Cylinder bores and wrist pins are splash lubricated from directed slots on the connecting rod thrust collars.

DIAGNOSIS AND TESTING - CHECKING ENGINE OIL PRESSURE

(1) Disconnect and remove oil pressure switch. (Refer to 9 - ENGINE/LUBRICATION/OIL PRESSURE SENSOR/SWITCH - REMOVAL)

(2) Install Special Tools C-3292 Gauge with 8406 Adaptor fitting.

(3) Start engine and record oil pressure. Refer to Specifications for correct oil pressure requirements. (Refer to 9 - ENGINE - SPECIFICATIONS)

CAUTION: If oil pressure is 0 at idle, do not perform the 3000 RPM test

(4) If oil pressure is 0 at idle. Shut off engine, check for pressure relief valve stuck open, a clogged oil pick-up screen or a damaged oil pick-up tube O-ring.

(5) After test is complete, remove test gauge and fitting.

(6) Install oil pressure switch and connector. (Refer to 9 - ENGINE/LUBRICATION/OIL PRESSURE SENSOR/SWITCH - INSTALLATION)

OIL

STANDARD PROCEDURE

ENGINE OIL LEVEL CHECK

The best time to check engine oil level is after the vehicle has sat overnight, or if the engine has been running, allow the engine to be shut off for at least 5 minutes before checking oil level.

Checking the oil while the vehicle is on level ground will improve the accuracy of the oil level reading. Remove dipstick (Fig. 105) or (Fig. 106), and observe oil level. Add oil only when the level is at or below the MIN mark (Fig. 107).

CAUTION: Do not operate engine if the oil level is above the MAX mark on the dipstick. Excessive oil volume can cause oil aeration which can lead to engine failure due to loss of oil pressure or increase in oil temperature.

STANDARD PROCEDURE - ENGINE OIL AND FILTER CHANGE

WARNING: NEW OR USED ENGINE OIL CAN BE IRRITATING TO THE SKIN. AVOID PROLONGED OR REPEATED SKIN CONTACT WITH ENGINE OIL. CONTAMINANTS IN USED ENGINE OIL, CAUSED BY INTERNAL COMBUSTION, CAN BE HAZARDOUS TO YOUR HEALTH. THOROUGHLY WASH EXPOSED SKIN WITH SOAP AND WATER. DO NOT WASH SKIN WITH GASOLINE, DIESEL FUEL, THINNER, OR SOLVENTS, HEALTH PROBLEMS CAN RESULT. DO NOT POLLUTE, DISPOSE OF USED ENGINE OIL PROPERLY. CONTACT YOUR DEALER OR GOVERNMENT AGENCY FOR LOCATION OF COLLECTION CENTER IN YOUR AREA.

Change engine oil at mileage and time intervals described in the Maintenance Schedule (Refer to LUBRICATION & MAINTENANCE/MAINTENANCE SCHEDULES - DESCRIPTION).

(1) Run engine until achieving normal operating temperature.

(2) Position the vehicle on a level surface and turn engine off.

(3) Remove oil fill cap (Fig. 105) or (Fig. 106).

(4) Raise vehicle on hoist.

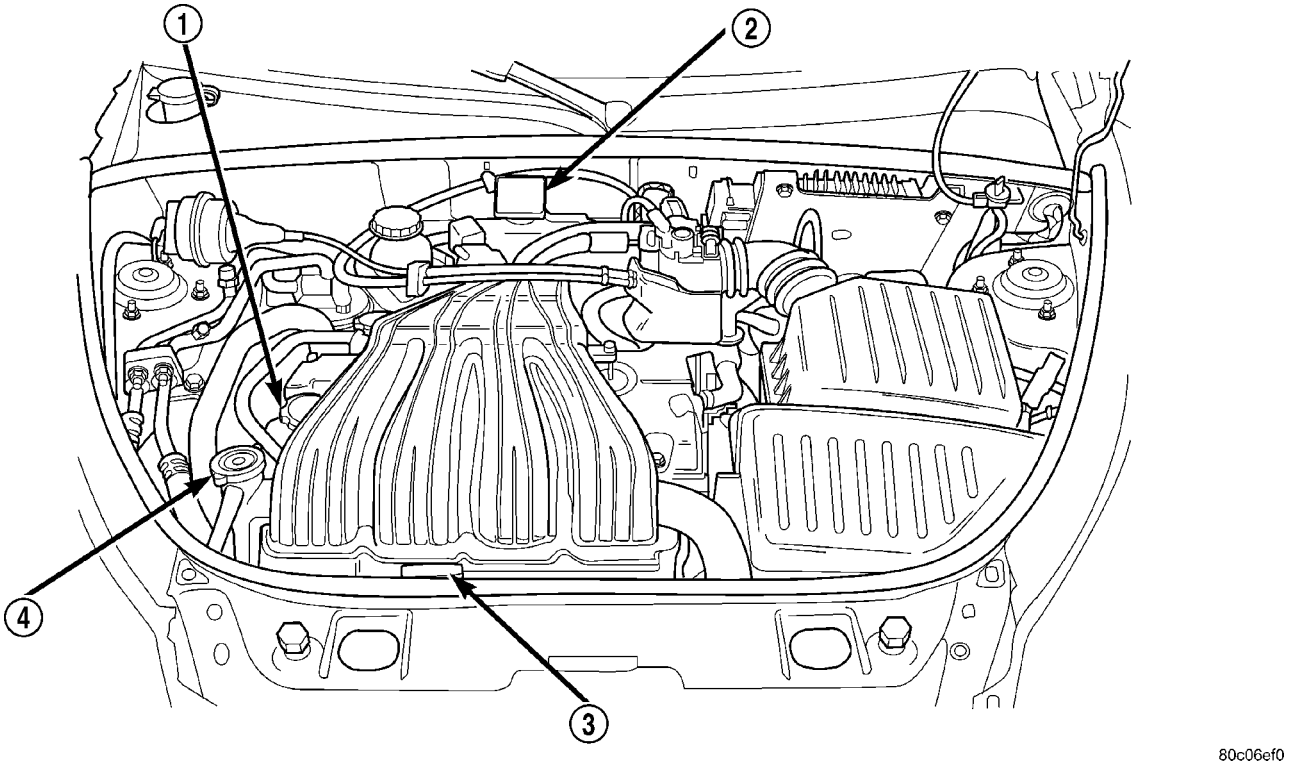

Fig. 105 Engine Oil Dipstick and Fill Locations

1 - ENGINE OIL FILL
2 - COOLANT RECOVERY CONTAINER
3 - ENGINE OIL DIPSTICK
4 - COOLANT PRESSURE CAP

OIL (Continued)

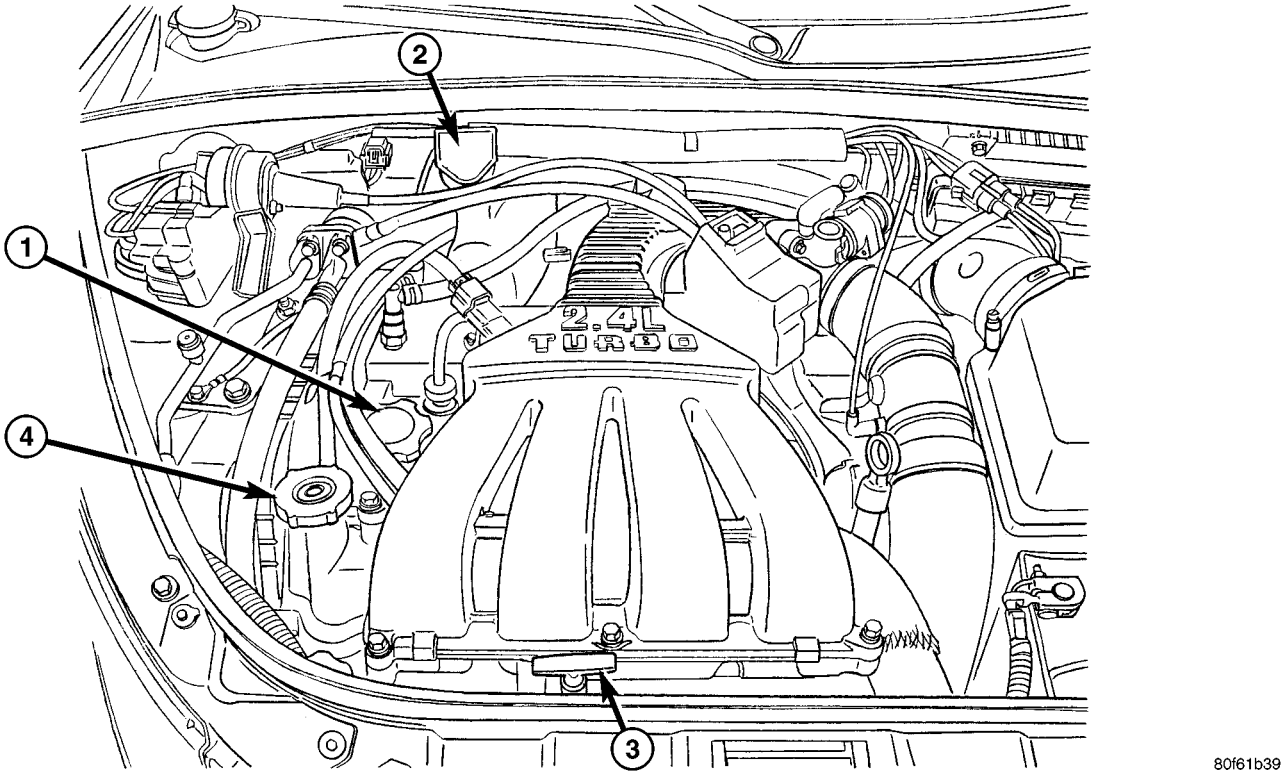

Fig. 106 Engine Oil Dipstick and Fill Locations - 2.4L Turbo

1 - ENGINE OIL FILL
2 - COOLANT RECOVERY CONTAINER
3 - ENGINE OIL DIPSTICK
4 - COOLANT PRESSURE CAP

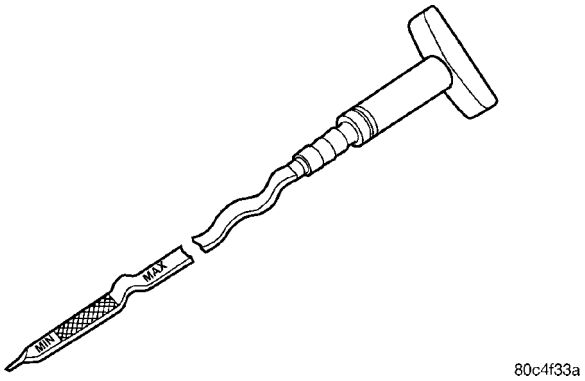

Fig. 107 Engine Oil Dipstick

(5) Place a suitable oil collecting container under oil pan drain plug.

(6) Remove oil pan drain plug (Fig. 108) or (Fig. 109) and allow oil to drain into collecting container. Inspect drain plug threads for stretching or other damage. Replace drain plug and gasket if damaged.

(7) Remove oil filter (Fig. 108) or (Fig. 109) (Refer to 9 - ENGINE/LUBRICATION/OIL FILTER - REMOVAL).

(8) Install oil pan drain plug. Torque drain plug to 28 N·m (20 ft. lbs.).

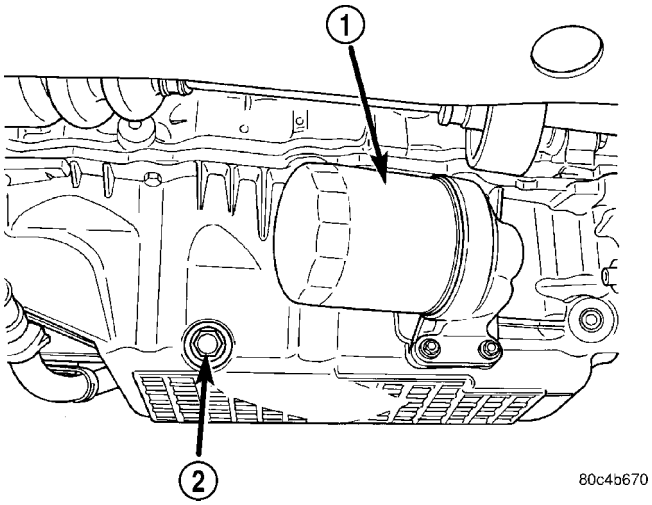

Fig. 108 Oil Filter and Drain Plug

1 - OIL FILTER
2 - DRAIN PLUG

(9) Install new oil filter (Refer to 9 - ENGINE/LUBRICATION/OIL FILTER - INSTALLATION).

(10) Lower vehicle and fill crankcase with specified type and amount of engine oil (Refer to LUBRICATION & MAINTENANCE/SPECIFICATIONS - FLUID CAPACITIES) and (Refer to LUBRICATION

OIL (Continued)

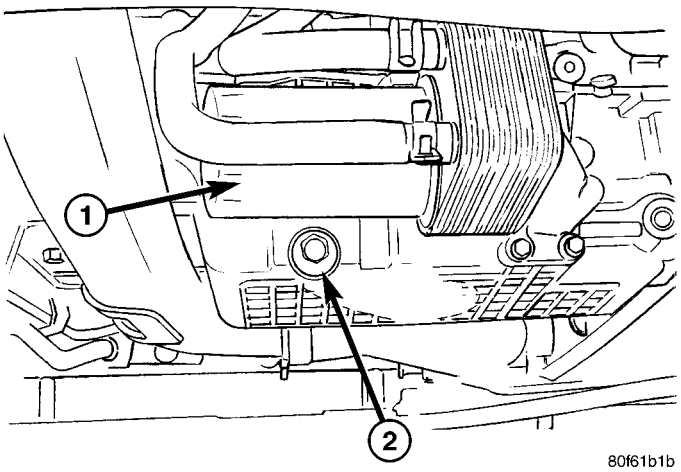

Fig. 109 Oil Filter and Drain Plug - 2.4L Turbo

1 - OIL FILTER
2 - DRAIN PLUG

& MAINTENANCE/FLUID TYPES - DESCRIPTION).

(11) Install oil fill cap (Fig. 105) or (Fig. 106).

(12) Start engine and inspect for leaks.

(13) Stop engine and inspect oil level.

OIL FILTER SPECIFICATION

All engines are equipped with a high quality full-flow, disposable type oil filter. Replace oil filter with a Mopar® or the equivalent.

USED ENGINE OIL DISPOSAL

Care should be exercised when disposing used engine oil after it has been drained from a vehicle engine. Refer to the WARNING listed above.

OIL FILTER

REMOVAL

CAUTION: When servicing the oil filter avoid deforming the filter can by installing the remove/install tool band strap against the can to base lock seam. The lock seam joining the can to the base is reinforced by the base plate.

(1) Using a suitable filter wrench, turn oil filter (Fig. 108) or (Fig. 109) counterclockwise to remove.

INSTALLATION

(1) Clean and check filter mounting surface. The surface must be smooth, flat and free of debris or pieces of gasket.

(2) Lubricate new oil filter gasket.

(3) Screw oil filter (Fig. 108) or (Fig. 109) on until the gasket contacts base. Tighten to 21 N·m (15 ft. lbs.).

OIL FILTER ADAPTER

REMOVAL

(1) Raise vehicle on hoist.

(2) Place a suitable oil collecting container under oil filter.

(3) Remove oil filter (Refer to 9 - ENGINE/LUBRICATION/OIL FILTER - REMOVAL).

(4) **Turbocharger Equipped Vehicles:** Remove oil cooler connector bolt. **DO NOT** disconnect coolant lines from oil cooler. Reposition oil cooler.

(5) Remove filter adapter attaching bolts (Fig. 110).

(6) Remove filter adapter and gasket (Fig. 110).

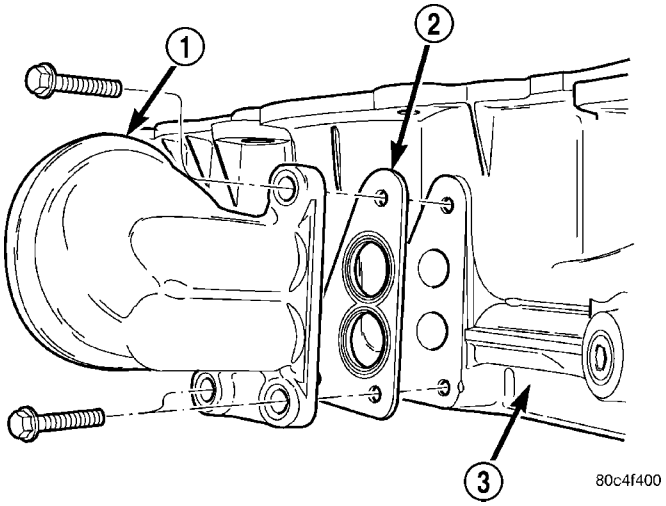

Fig. 110 Oil Filter Adaptor

1 - OIL FILTER ADAPTER
2 - GASKET
3 - OIL PAN

INSTALLATION

(1) Clean all gasket sealing surfaces

(2) Install gasket and filter adaptor to oil pan (Fig. 110). Tighten bolts to 12 N·m (105 in. lbs.).

(3) **Turbocharger Equipped Vehicles:**

- Replace oil cooler seal
- Lubricate seal and position oil cooler to oil filter adapter, aligning notch to tab
- Install oil cooler connector bolt. Torque connector bolt to 55 N·m (41 ft. lbs.)

(4) Install oil filter (Refer to 9 - ENGINE/LUBRICATION/OIL FILTER - INSTALLATION).

(5) Lower vehicle and check engine oil level. Adjust level as necessary.

OIL PAN

REMOVAL

(1) Raise vehicle on hoist.
(2) Drain engine oil and remove oil filter.
(3) Remove accessory drive belt splash shield.
(4) **Turbocharger Equipped Vehicles:** Remove turbocharger to charge air cooler hose assembly (Refer to 11 - EXHAUST SYSTEM/TURBOCHARGER SYSTEM/CHARGE AIR COOLER AND HOSES - REMOVAL).
(5) **Turbocharger Equipped Vehicles:** Remove oil cooler connector bolt. **DO NOT** disconnect coolant lines from oil cooler. Reposition oil cooler.
(6) Remove structural collar (Refer to 9 - ENGINE/ENGINE BLOCK/STRUCTURAL COLLAR - REMOVAL).
(7) Remove lower torque strut (Refer to 9 - ENGINE/ENGINE MOUNTING/TORQUE STRUT - REMOVAL).
(8) Remove oil filter adapter and gasket (Fig. 111).
(9) Remove oil pan and gasket (Fig. 111).
(10) Clean oil pan and all gasket surfaces.

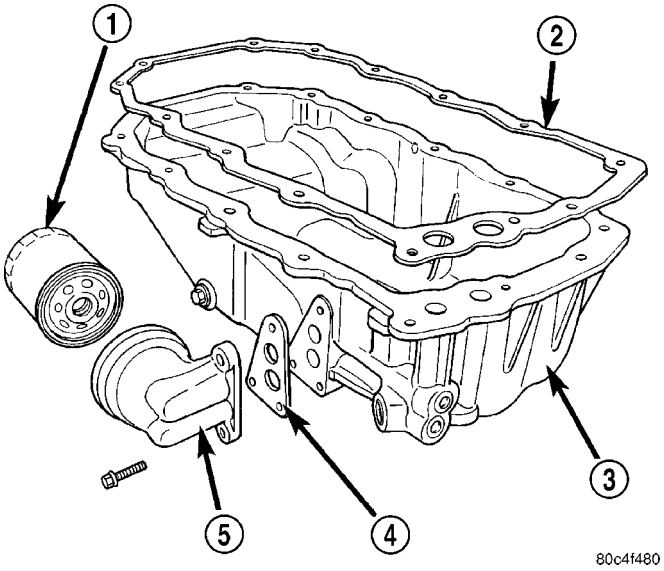

Fig. 111 Oil Pan

1 - OIL FILTER
2 - OIL PAN GASKET
3 - OIL PAN
4 - ADAPTER GASKET
5 - OIL FILTER ADAPTER

INSTALLATION

(1) Apply Mopar® Engine RTV GEN II at the oil pump to engine block parting lines (Fig. 112).
(2) Install oil pan gasket to the block.
(3) Install pan gasket and pan. Tighten screws to 12 N·m (105 in. lbs.).
(4) Install oil filter adapter and gasket (Fig. 111). Tighten screws to 12 N·m (105 in. lbs.).

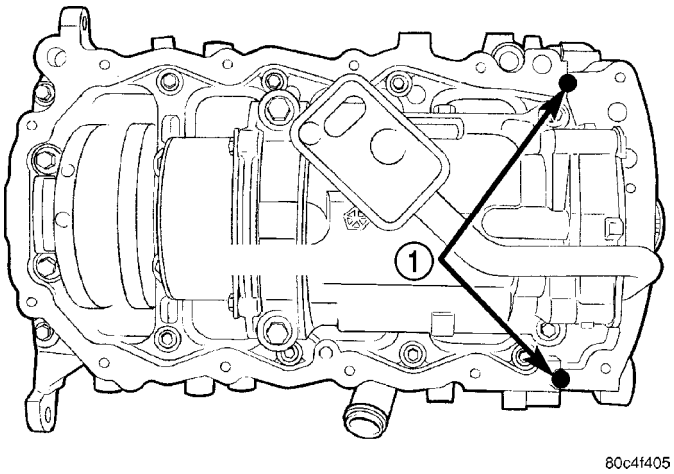

Fig. 112 Oil Pan Sealing

1 - SEALER LOCATIONS

(5) **Turbocharger Equipped Vehicles:**
- Replace oil cooler seal
- Lubricate seal and position oil cooler to oil filter adapter, aligning notch to tab
- Install oil cooler connector bolt. Torque connector bolt to 55 N·m (41 ft. lbs.)

(6) Install oil drain plug and oil filter.
(7) Install structural collar (Refer to 9 - ENGINE/ENGINE BLOCK/STRUCTURAL COLLAR - INSTALLATION).
(8) Install lower torque strut (Refer to 9 - ENGINE/ENGINE MOUNTING/TORQUE STRUT - INSTALLATION).
(9) **Turbocharger Equipped Vehicles:** Install turbocharger to charge air cooler hose assembly (Refer to 11 - EXHAUST SYSTEM/TURBOCHARGER SYSTEM/CHARGE AIR COOLER AND HOSES - INSTALLATION).
(10) Lower vehicle and fill engine crankcase with proper oil to correct level.

OIL PRESSURE SENSOR/ SWITCH

DESCRIPTION

The oil pressure switch is located on the right rear side of the engine block (Fig. 113). The oil pressure switch is a pressure sensitive switch that is activated by the engine's oil pressure (in the main oil gallery). The switch is a two terminal device (one terminal is provided to the wiring harness and the other terminal is the switch's metal housing that screws into the engine block).

OIL PRESSURE SENSOR/SWITCH (Continued)

OPERATION

The oil pressure switch is normally “Closed.” The switch changes from a ″Closed″ circuit to an ″Open″ circuit, on increasing pressure of 7 psig. The oil pressure switch changes from an ″Open″ circuit to a ″Closed″ circuit, on decreasing pressure, between 2 psig and 4 psig.

REMOVAL

(1) Raise vehicle.

(2) Position oil collecting container under pressure switch location.

(3) Disconnect oil pressure switch electrical connector and remove switch (Fig. 113).

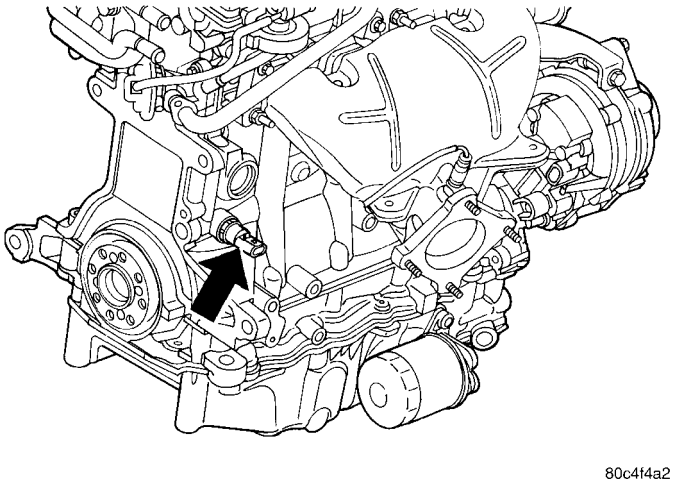

Fig. 113 Engine Oil Pressure Switch

INSTALLATION

(1) Install oil pressure switch and connect electrical connector (Fig. 113) .

(2) Lower vehicle.

(3) Start engine and allow to run a minimum of 2 minutes.

(4) Shut engine off and check engine oil level. Adjust level as necessary.

OIL PUMP

REMOVAL

(1) Disconnect negative cable from battery.

(2) Remove timing belt (Refer to 9 - ENGINE/VALVE TIMING/TIMING BELT AND SPROCKETS - REMOVAL).

(3) Remove timing belt rear cover (Refer to 9 - ENGINE/VALVE TIMING/TIMING BELT COVER(S) - REMOVAL).

(4) Remove oil pan (Refer to 9 - ENGINE/LUBRICATION/OIL PAN - REMOVAL).

(5) Remove crankshaft sprocket using Special Tools 6793 and C-4685-C2 (Fig. 114).

(6) Remove crankshaft key (Fig. 115).

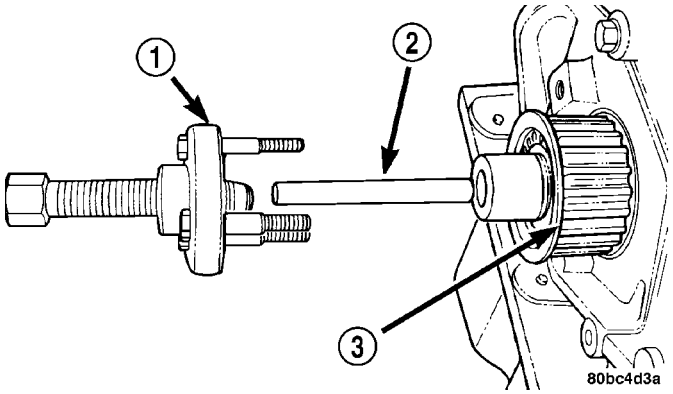

Fig. 114 Crankshaft Sprocket - Removal

1 - SPECIAL TOOL 6793
2 - SPECIAL TOOL C-4685–C2
3 - CRANKSHAFT SPROCKET

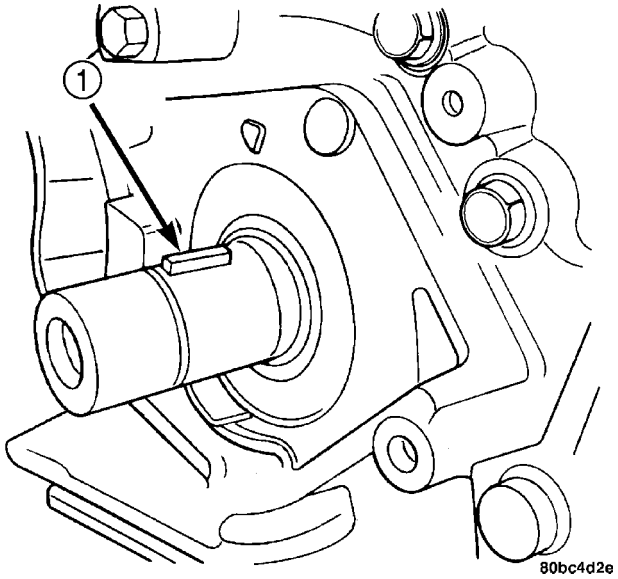

Fig. 115 Crankshaft Key

1 - CRANKSHAFT KEY

(7) Remove oil pick-up tube.

(8) Remove oil pump (Fig. 116) and front crankshaft seal.

DISASSEMBLY

(1) Remove oil pump cover fasteners, and lift off cover (Fig. 117).

(2) Remove pump rotors (Fig. 117).

(3) Wash all parts in a suitable solvent and inspect carefully for damage or wear.

CLEANING

Clean all parts thoroughly.

OIL PUMP (Continued)

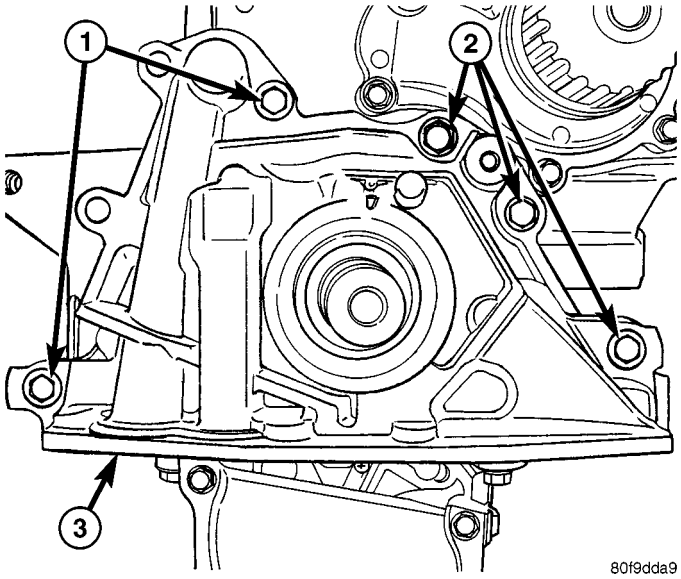

Fig. 116 Oil Pump

1 - BOLTS
2 - BOLTS
3 - OIL PUMP

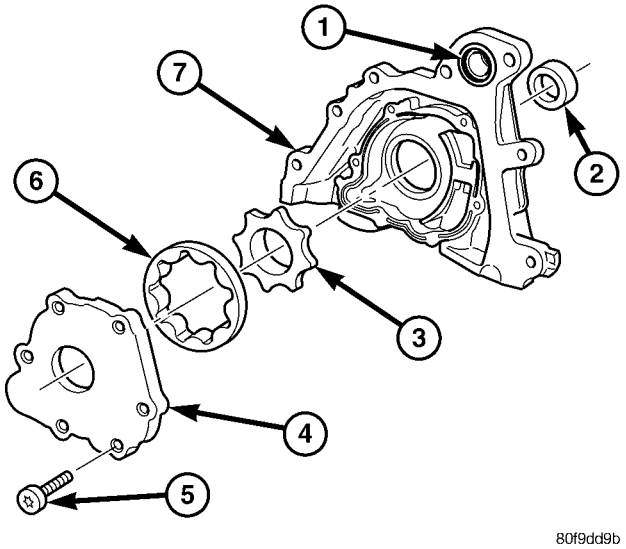

Fig. 117 Oil Pump

1 - O-RING
2 - FRONT CRANKSHAFT SEAL
3 - INNER ROTOR
4 - OIL PUMP COVER
5 - FASTENER
6 - OUTER ROTOR
7 - OIL PUMP BODY

INSPECTION

(1) Inspect the mating surface of the oil pump. Surface should be smooth. Replace pump cover if scratched or grooved.

(2) Lay a straightedge across the pump cover surface (Fig. 118). If a 0.025 mm (0.001 in.) feeler gauge can be inserted between cover and straight edge, cover should be replaced.

(3) Measure thickness and diameter of outer rotor. If outer rotor thickness measures 10.699 mm (0.421 in.) or less (Fig. 119), or if the diameter is 85.924 mm (3.383 in.) or less, replace outer rotor.

(4) If inner rotor measures 10.699 mm (0.421 in.) or less replace inner rotor (Fig. 120).

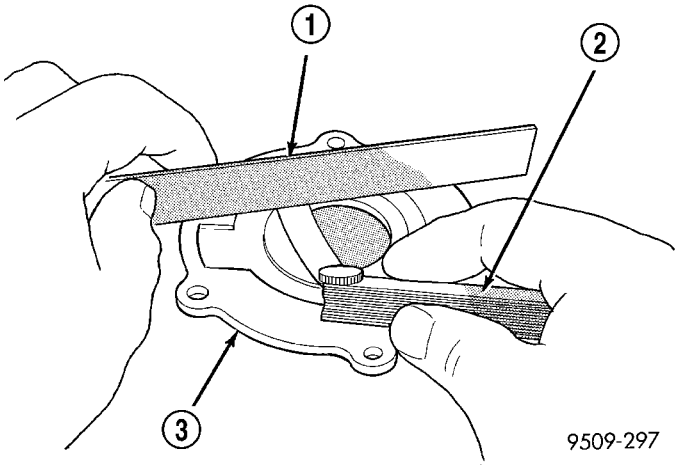

Fig. 118 Checking Oil Pump Cover Flatness

1 - STRAIGHT EDGE
2 - FEELER GAUGE
3 - OIL PUMP COVER

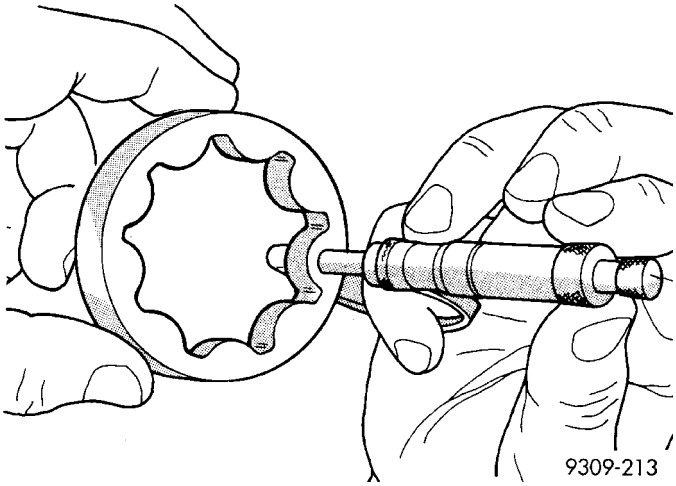

Fig. 119 Measuring Outer Rotor Thickness

ASSEMBLY

(1) Assemble pump, using new parts as required. **Install the inner rotor with chamfer facing the cast iron oil pump cover.**

(2) Prime oil pump before installation by filling rotor cavity with engine oil.

(3) Install cover and tighten fasteners to 13 N·m (118 in. lbs.) (Fig. 117).

OIL PUMP (Continued)

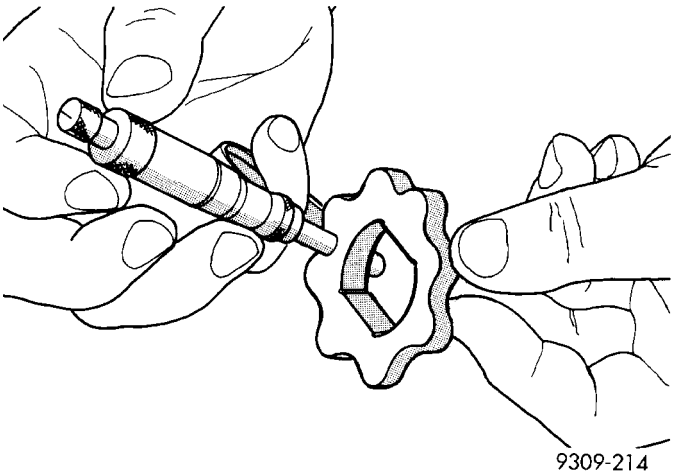

Fig. 120 Measuring Inner Rotor Thickness

INSTALLATION

(1) Make sure all surfaces are clean and free of oil and dirt.

(2) Apply Mopar® Gasket Maker to oil pump as shown in (Fig. 121). Install O-ring into oil pump body discharge passage.

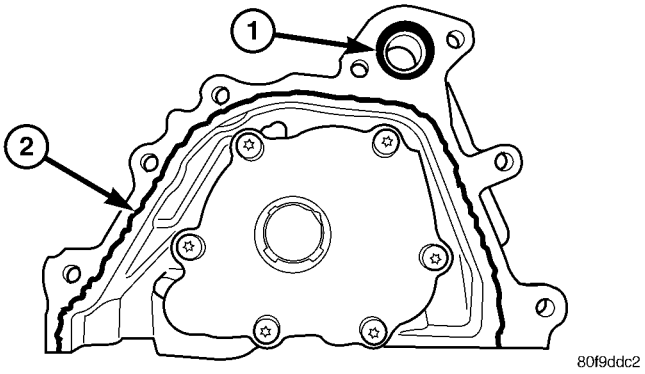

Fig. 121 Oil Pump Sealing

1 - O-RING
2 - SEALER LOCATION

(3) Prime oil pump with engine oil before installation.

(4) Align oil pump rotor flats with flats on crankshaft. Install the oil pump to the block (Fig. 116).

CAUTION: To align, the front crankshaft seal MUST be out of pump, or damage may result.

(5) Install new front crankshaft seal using Special Tool 6780 (Fig. 122).

(6) Install crankshaft key (Fig. 115).

CAUTION: The crankshaft sprocket is set to a predetermined depth from the factory for correct timing belt tracking. If removed, use of Special Tool 6792 is required to set the sprocket to original installation depth. An incorrectly installed sprocket will result in timing belt and engine damage.

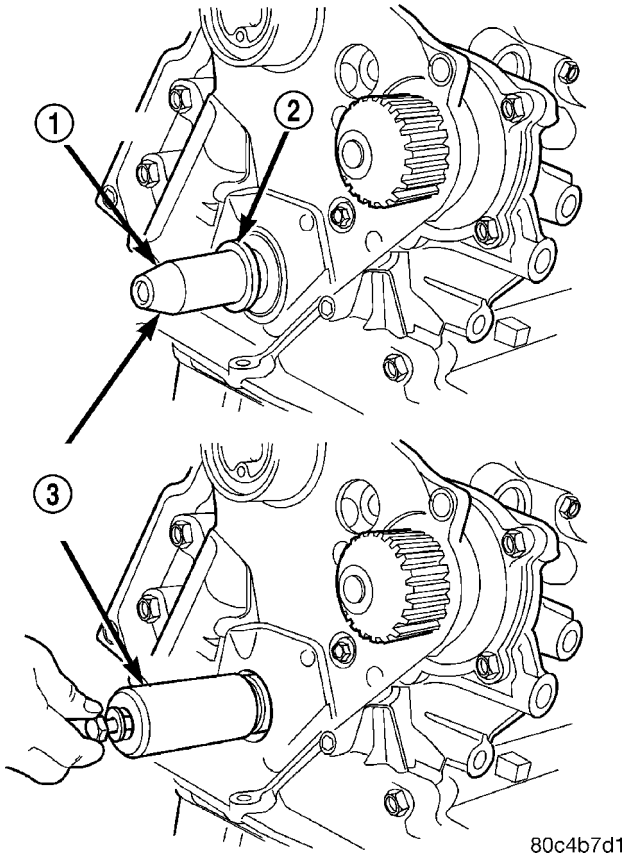

Fig. 122 Front Crankshaft Seal - Installation

1 - PROTECTOR
2 - SEAL
3 - SPECIAL TOOL 6780

(7) Install crankshaft sprocket using Special Tool 6792 (Fig. 123).

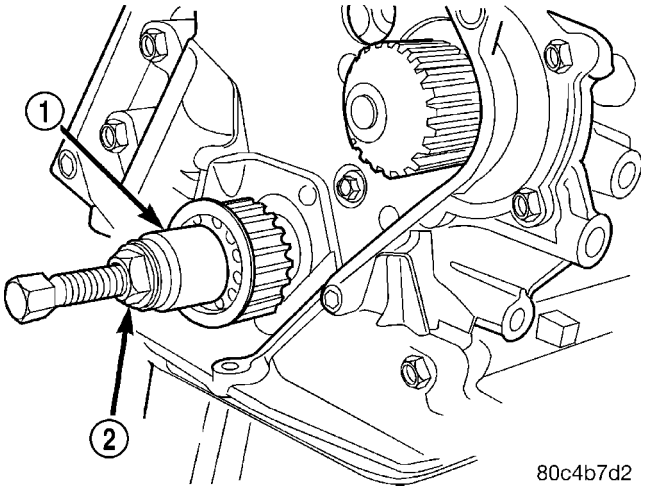

Fig. 123 Crankshaft Sprocket - Installation

1 - SPECIAL TOOL 6792
2 - TIGHTEN NUT TO INSTALL

OIL PUMP (Continued)

(8) Install oil pump pick-up tube.

(9) Install oil pan (Refer to 9 - ENGINE/LUBRICATION/OIL PAN - INSTALLATION).

(10) Install timing belt rear cover (Refer to 9 - ENGINE/VALVE TIMING/TIMING BELT COVER(S) - INSTALLATION).

(11) Install timing belt (Refer to 9 - ENGINE/VALVE TIMING/TIMING BELT AND SPROCKETS - INSTALLATION).

OIL JET - 2.4L TURBO

DESCRIPTION

The 2.4L Turbocharged engines are equipped with four oil jets installed in the engine block. The oil jets are provided engine oil pressure from the main oil gallery. The oil jets are used to cool the pistons. An integral check ball controls the flow of oil through the oil jet (Fig. 124).

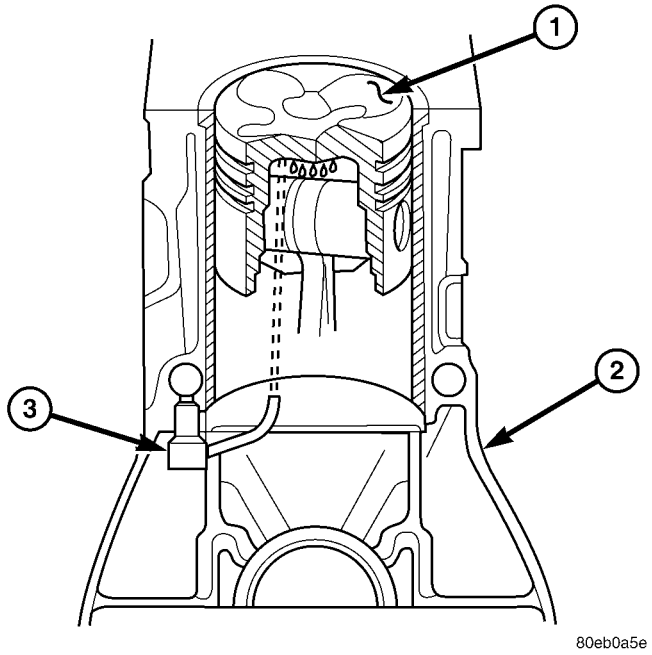

Fig. 124 Oil Jet - 2.4L Turbo

1 - PISTON ASSEMBLY
2 - ENGINE BLOCK
3 - OIL JET

REMOVAL

(1) Remove crankshaft (Refer to 9 - ENGINE/ENGINE BLOCK/CRANKSHAFT - REMOVAL).

(2) Remove oil jet fastener (Fig. 125).

CAUTION: Do Not Pull on Oil Jet Tube

(3) Using pliers or other similar tool, pull oil jet from engine block.

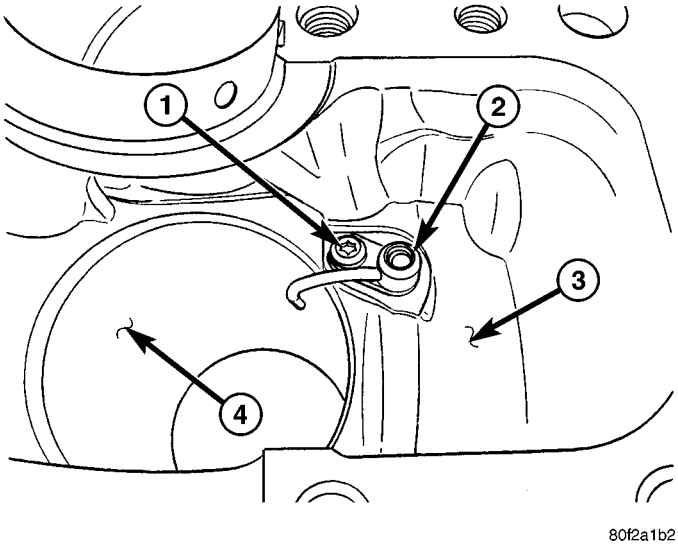

Fig. 125 Oil Jet Fastener - 2.4L Turbo

1 - FASTENER - 12 N·m (105 in. lbs.)
2 - OIL JET
3 - ENGINE BLOCK
4 - CYLINDER WALL

INSTALLATION

(1) Inspect oil jet o-ring (Fig. 126).

(2) Lightly coat o-ring with clean engine oil.

(3) Push oil jet into engine block until it is fully seated.

CAUTION: Ensure oil jet is fully seated in engine block before installing fastener. Do Not use the oil jet fastener to draw the oil jet into the engine block. Damage to oil jet may occur.

(4) Install oil jet fastener. Torque fastener to 12 N·m (105 in. lbs.) (Fig. 125).

(5) Install crankshaft (Refer to 9 - ENGINE/ENGINE BLOCK/CRANKSHAFT - INSTALLATION).

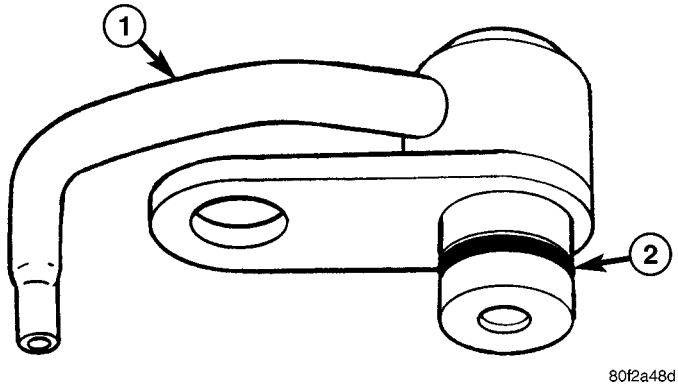

Fig. 126 Oil Jet O-ring

1 - OIL JET
2 - O-RING

OIL COOLER & LINES - 2.4L TURBO

DESCRIPTION

An engine oil cooler is used on the 2.4L Turbocharged engine. The cooler is a coolant-to-oil type and mounted between the oil filter and oil filter adapter (Fig. 127).

REMOVAL

(1) Raise vehicle on hoist.
(2) Drain cooling system (Refer to 7 - COOLING/ENGINE - STANDARD PROCEDURE).
(3) Disconnect oil cooler coolant hoses (Fig. 127).
(4) Remove oil filter.
(5) Remove oil cooler connector bolt (Fig. 128).
(6) Remove oil cooler.

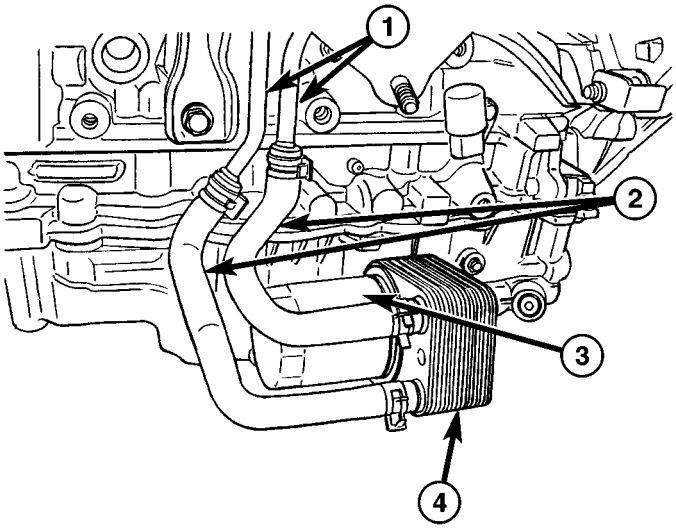

80f38ebc

Fig. 127 Oil Cooler and Lines

1 - COOLANT TUBES
2 - COOLANT HOSES
3 - OIL FILTER
4 - OIL COOLER

INSTALLATION

(1) Replace oil cooler seal (Fig. 129).
(2) Lubricate seal and position oil cooler to oil filter adapter, aligning notch to tab (Fig. 130).
(3) Install oil cooler connector bolt. Torque connector bolt to 55 N·m (41 ft. lbs.) (Fig. 128).
(4) Install oil filter.
(5) Connect oil cooler coolant hoses (Fig. 127).
(6) Lower vehicle.
(7) Fill cooling system (Refer to 7 - COOLING/ENGINE - STANDARD PROCEDURE).

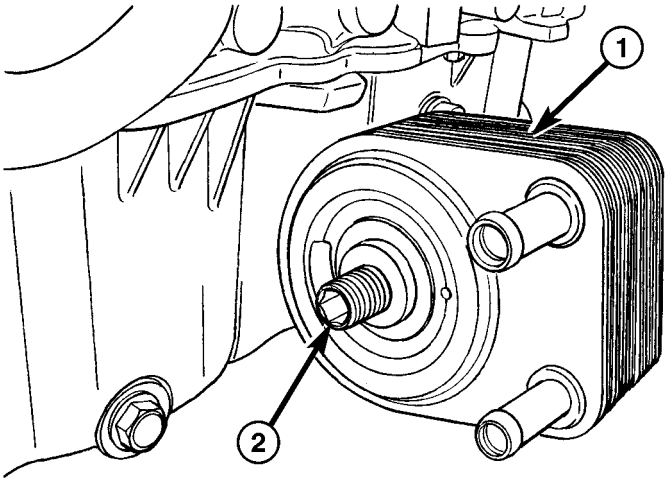

80f38ed0

Fig. 128 Oil Cooler Connector Bolt

1 - OIL COOLER
2 - CONNECTOR BOLT

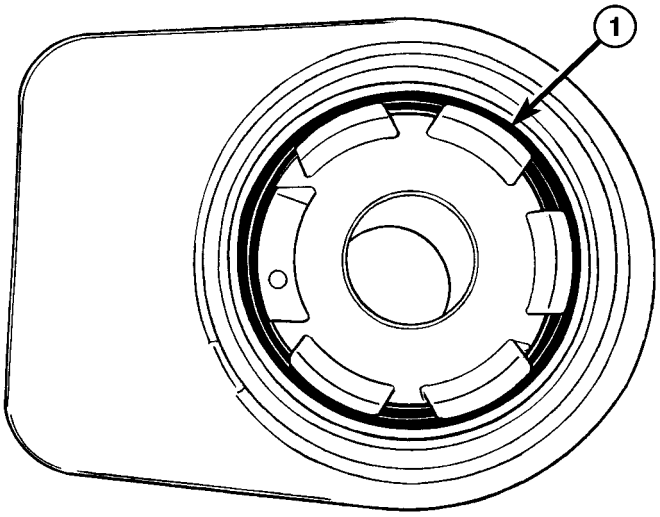

80f38ee2

Fig. 129 Oil Cooler Seal

1 - OIL COOLER SEAL

OIL COOLER & LINES - 2.4L TURBO (Continued)

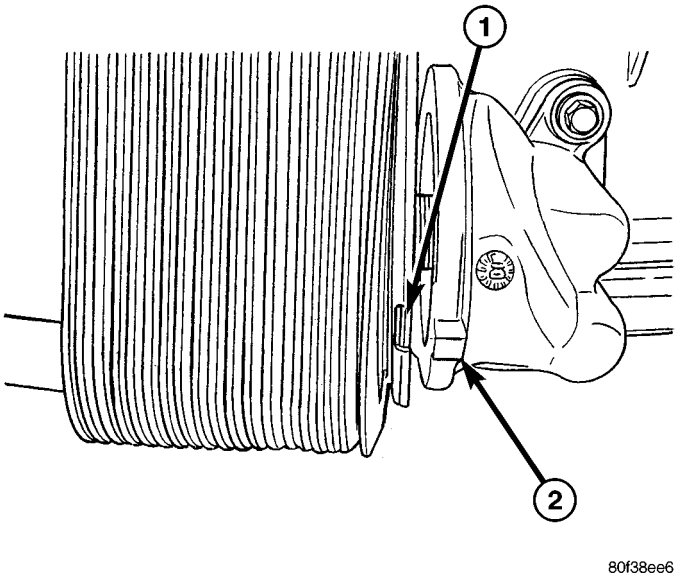

Fig. 130 Oil Cooler Alignment

1 - NOTCH
2 - TAB

INTAKE MANIFOLD

DIAGNOSIS AND TESTING - INTAKE MANIFOLD LEAKS

An intake manifold air leak is characterized by lower than normal manifold vacuum. Also, one or more cylinders may not be functioning.

WARNING: USE EXTREME CAUTION WHEN THE ENGINE IS OPERATING. DO NOT STAND IN A DIRECT LINE WITH THE FAN. DO NOT PUT YOUR HANDS NEAR THE PULLEYS, BELTS OR THE FAN. DO NOT WEAR LOOSE CLOTHING.

(1) Start the engine.
(2) Spray a small stream of water (Spray Bottle) at the suspected leak area.
(3) If engine RPM'S change, the area of the suspected leak has been found.
(4) Repair as required.

REMOVAL

REMOVAL - UPPER INTAKE MANIFOLD

Non-Turbo

(1) Disconnect inlet air temperature sensor and make-up air hose from clean air hose (Fig. 131).
(2) Remove air cleaner housing and clean air hose assembly.

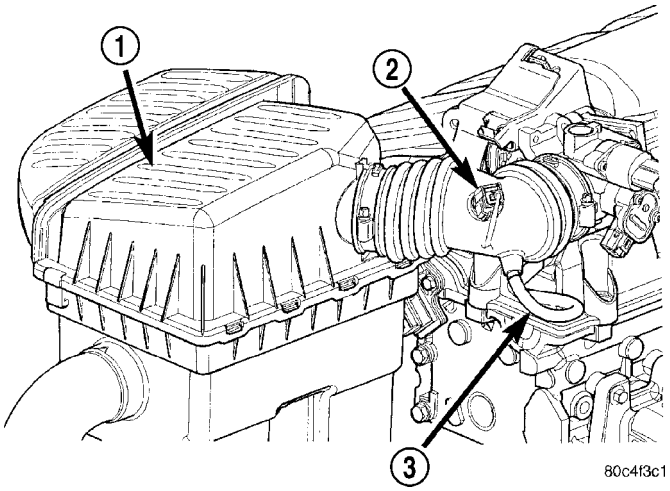

Fig. 131 Clean Air Hose

1 - AIR CLEANER HOUSING
2 - INLET AIR TEMPERATURE SENSOR
3 - MAKE-UP AIR HOSE

(3) Disconnect negative cable from battery.
(4) Remove engine cover by pulling upward to release from ball stud retainers (Fig. 132).

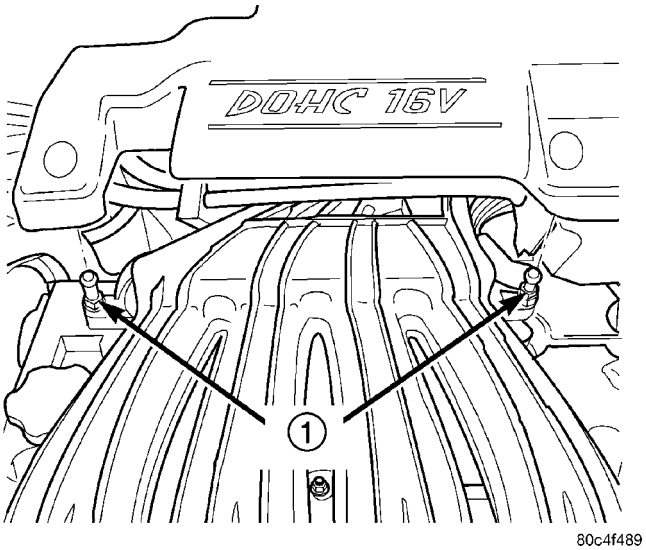

Fig. 132 Engine Cover

1 - BALL STUDS

(5) Remove throttle and speed control cables from throttle lever and bracket.

INTAKE MANIFOLD (Continued)

(6) Disconnect manifold absolute pressure (MAP) sensor (Fig. 133), idle air control (IAC) motor and throttle position sensor (TPS) wiring connectors (Fig. 134).

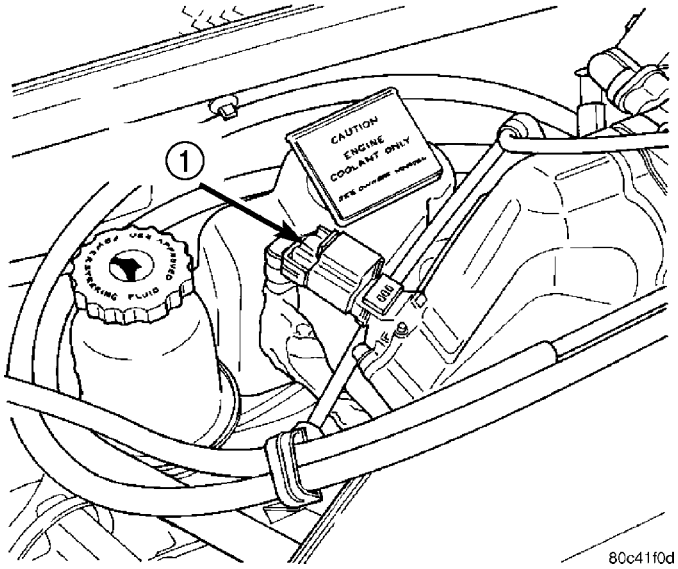

Fig. 133 MAP Sensor

1 - MAP SENSOR

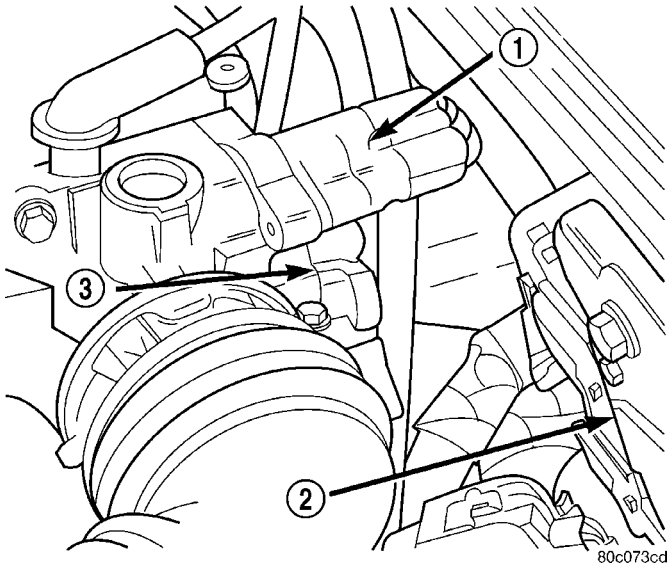

Fig. 134 Idle Air Control (IAC) Motor and Throttle Position Sensor (TPS) Wiring Connectors

1 - IAC
2 - PCM
3 - TPS

(7) Disconnect proportional purge hoses (Fig. 135).
(8) Disconnect brake booster hose (Fig. 136).

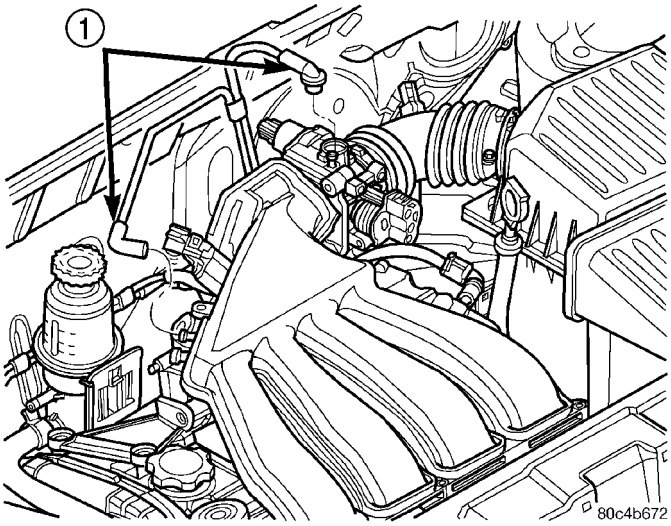

Fig. 135 Proportional Purge Hoses

1 - PROPORTIONAL PURGE HOSES

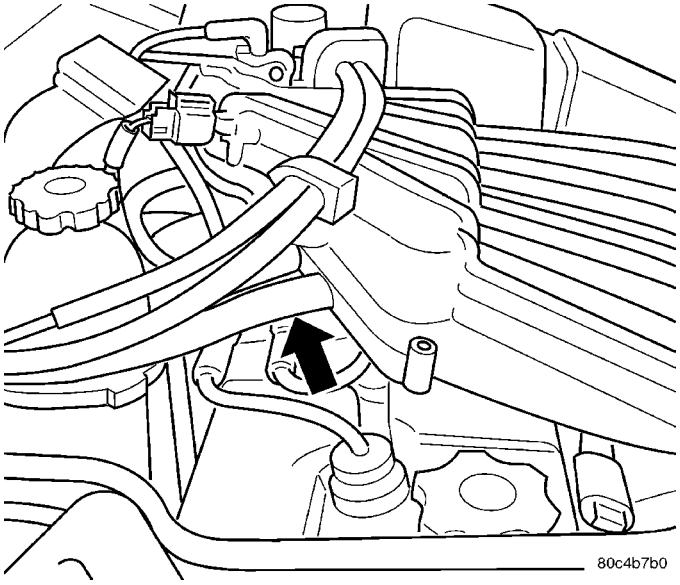

Fig. 136 Brake Booster Hose

(9) Disconnect PCV hose from intake manifold (Fig. 137).

INTAKE MANIFOLD (Continued)

(10) Remove throttle body support bracket bolt at the throttle body (Fig. 137).

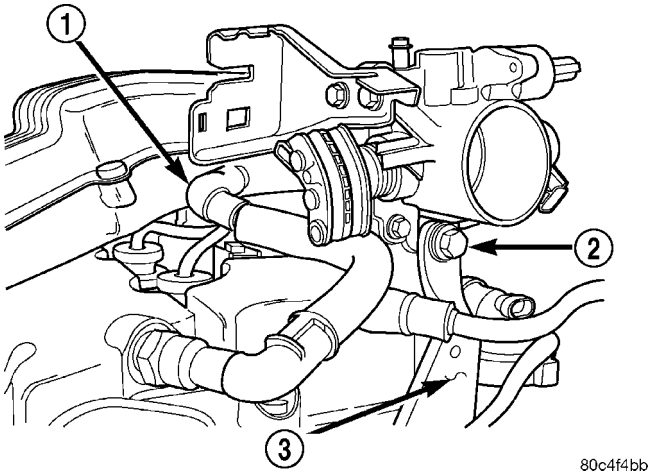

Fig. 137 Throttle Body Support Bracket and PCV Hose

1 - PCV HOSE
2 - BOLT
3 - SUPPORT BRACKET

(11) Remove upper intake manifold fasteners (Fig. 149).

(12) Remove upper intake manifold.

(13) If further service is required, cover the lower intake manifold openings to prevent foreign materials from entering the engine (Fig. 138).

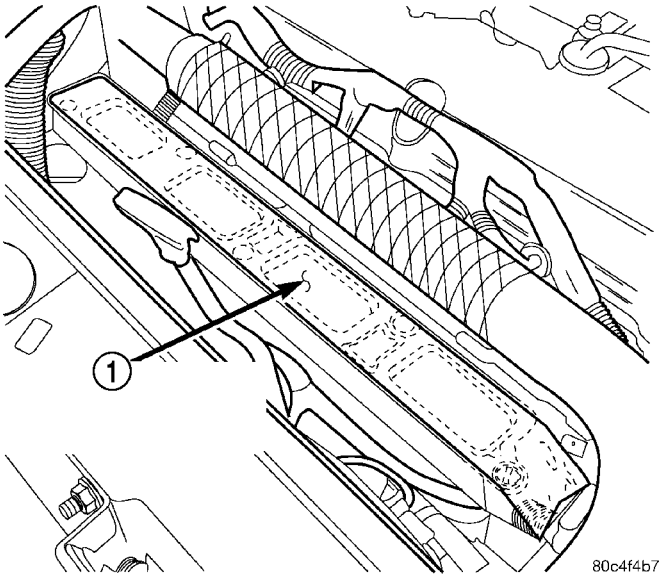

Fig. 138 Cover Lower Intake Manifold Openings

1 - INTAKE MANIFOLD MUST BE COVERED DURING SERVICE

Turbo

(1) Disconnect negative battery cable.

(2) Disconnect the inlet air temperature (IAT) sensor connector (Fig. 139).

(3) Disconnect the throttle inlet pressure (TIP) hose (Fig. 139).

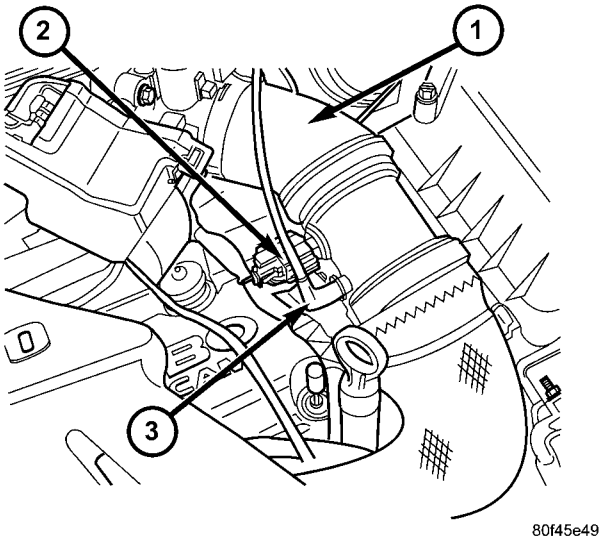

Fig. 139 IAT Sensor - 2.4L Turbo

1 - HOSE - CHARGE AIR COOLER TO THROTTLE BODY
2 - IAT SENSOR
3 - TIP HOSE

(4) Disconnect charge air cooler hose at throttle body (Fig. 139) and (Fig. 140).

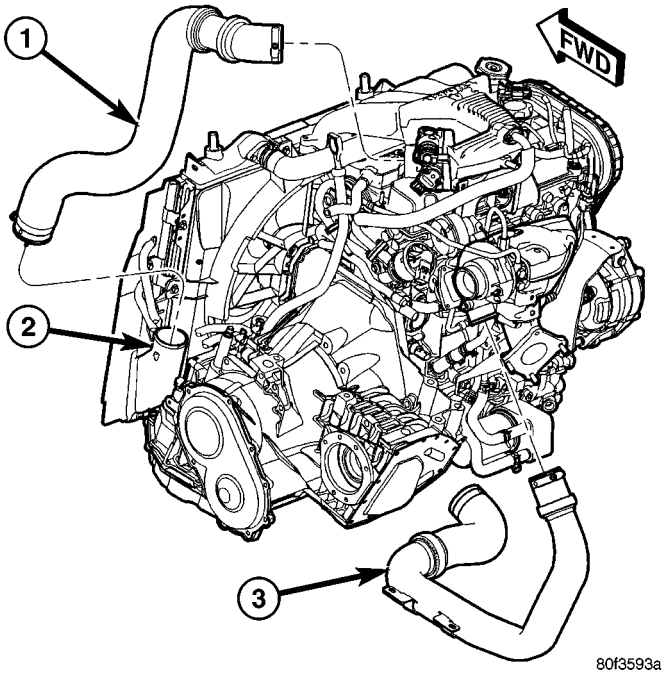

Fig. 140 Charge Air Cooler Hoses

1 - HOSE - CHARGE AIR COOLER TO THROTTLE BODY
2 - CHARGE AIR COOLER
3 - HOSE - TURBOCHARGER TO CHARGE AIR COOLER

INTAKE MANIFOLD (Continued)

(5) Disconnect idle air control (IAC) motor and throttle position sensor connectors.

(6) Disconnect the MAP sensor connector (Fig. 141).

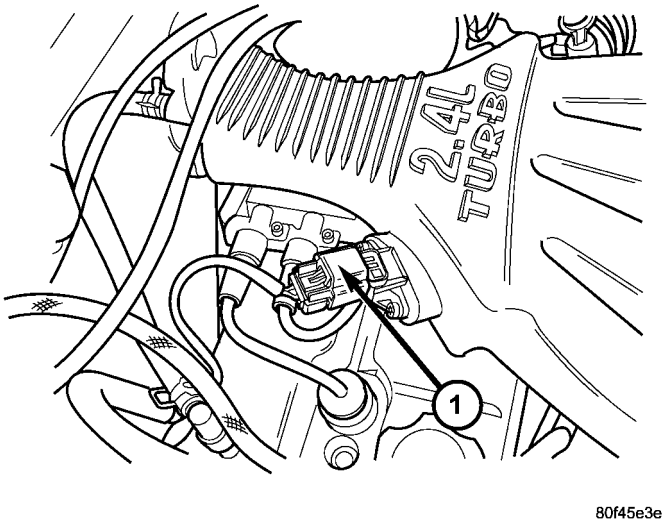

Fig. 141 MAP Sensor - 2.4L Turbo

1 - MAP SENSOR

(7) Remove the throttle control shield (Fig. 142).

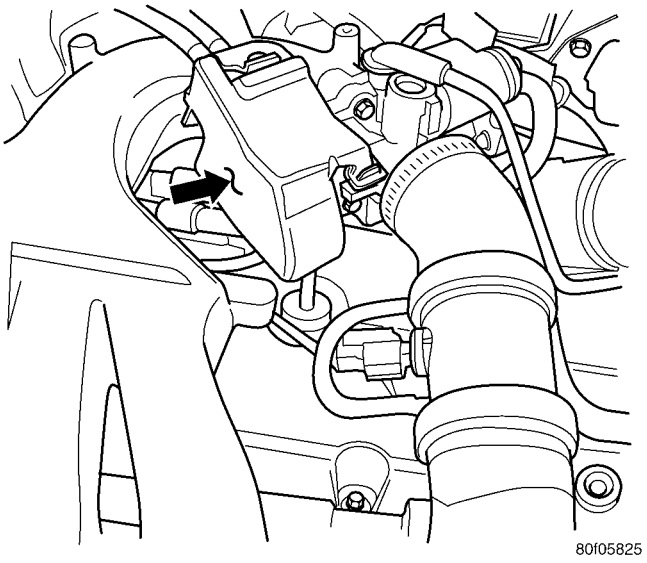

Fig. 142 Throttle Control Shield 2.4L Turbo

(8) Remove the throttle cable from the throttle body lever (Fig. 143).

(9) If equipped with speed control, remove speed control cable from the throttle lever by sliding clasp out hole used for throttle cable.

(10) Remove the 2 screws for the throttle cable bracket.

(11) Reposition throttle cable bracket (Fig. 144).

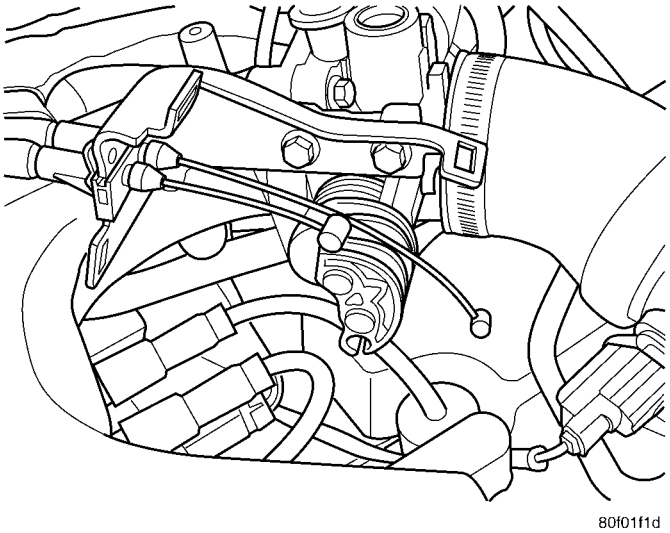

Fig. 143 Throttle Cables - 2.4L Turbo

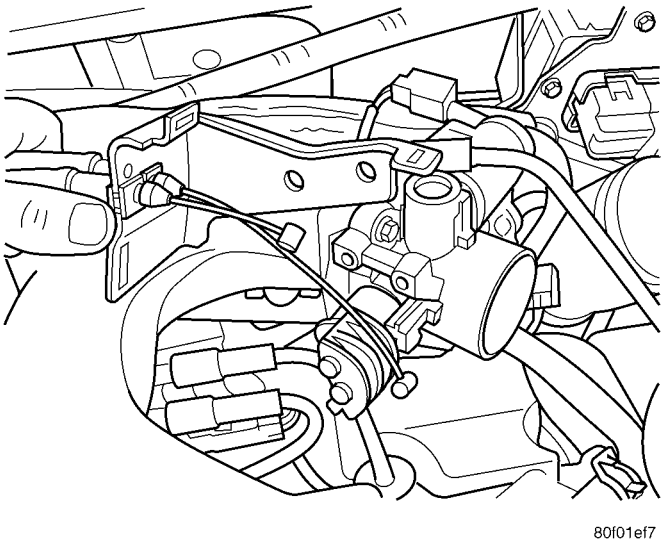

Fig. 144 Throttle Cable Bracket - 2.4L Turbo

(12) Disconnect brake booster hose and PCV hose from intake manifold (Fig. 145).

(13) Disconnect purge solenoid hose from throttle body (Fig. 145).

(14) Remove upper intake manifold support bracket (Fig. 146).

(15) Remove upper intake manifold fasteners (Fig. 150).

(16) Remove upper intake manifold.

(17) If further service is required, cover the lower intake manifold openings to prevent foreign materials from entering the engine (Fig. 138).

INTAKE MANIFOLD (Continued)

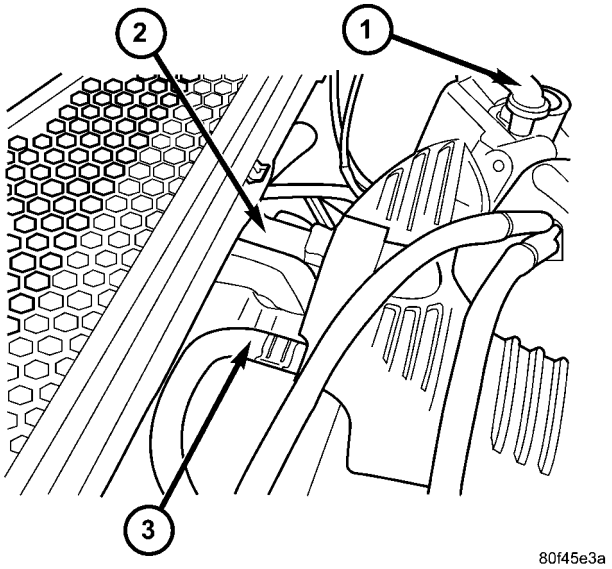

Fig. 145 Vacuum Hoses - 2.4L Turbo

1 - PURGE SOLENOID HOSE
2 - BRAKE BOOSTER HOSE
3 - PCV HOSE

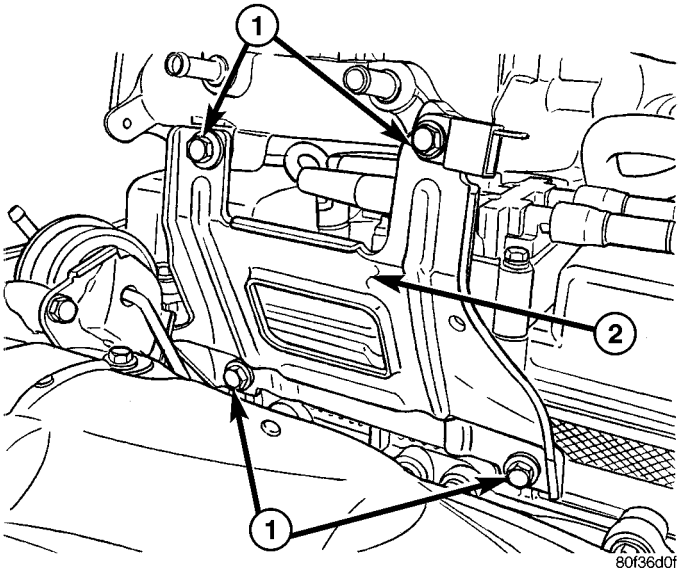

Fig. 146 Support Bracket

1 - FASTENERS
2 - UPPER INTAKE MANIFOLD SUPPORT BRACKET

REMOVAL - LOWER INTAKE MANIFOLD

WARNING: RELEASE FUEL SYSTEM PRESSURE BEFORE SERVICING SYSTEM COMPONENTS. SERVICE VEHICLES IN WELL VENTILATED AREAS AND AVOID IGNITION SOURCES. NEVER SMOKE WHILE SERVICING THE VEHICLE.

(1) Perform fuel system pressure release procedure **before attempting any repairs (Refer to 14 - FUEL SYSTEM/FUEL DELIVERY - STANDARD PROCEDURE).**

(2) Disconnect negative battery cable.

(3) Remove upper intake manifold (Refer to 9 - ENGINE/MANIFOLDS/INTAKE MANIFOLD UPPER - REMOVAL).

(4) Partially drain cooling system below thermostat level (Refer to 7 - COOLING/ENGINE - STANDARD PROCEDURE).

(5) Remove upper radiator hose.

(6) Remove coolant outlet connector and thermostat (Refer to 7 - COOLING/ENGINE/ENGINE COOLANT THERMOSTAT - REMOVAL).

(7) Disconnect the fuel supply line quick connect at the fuel rail assembly (Refer to 14 - FUEL SYSTEM/FUEL DELIVERY/QUICK CONNECT FITTING - STANDARD PROCEDURE).

WARNING: WRAP SHOP TOWELS AROUND HOSE TO CATCH ANY GASOLINE SPILLAGE.

(8) Disconnect fuel injector wiring harness.

(9) Remove screw attaching the oil dipstick tube to lower intake manifold (Fig. 147) or (Fig. 148).

(10) **Turbocharger Equipped Engine:** Remove fasteners for lower intake manifold support bracket (Fig. 148).

(11) Remove lower intake manifold fasteners (Fig. 152).

(12) Remove lower intake manifold.

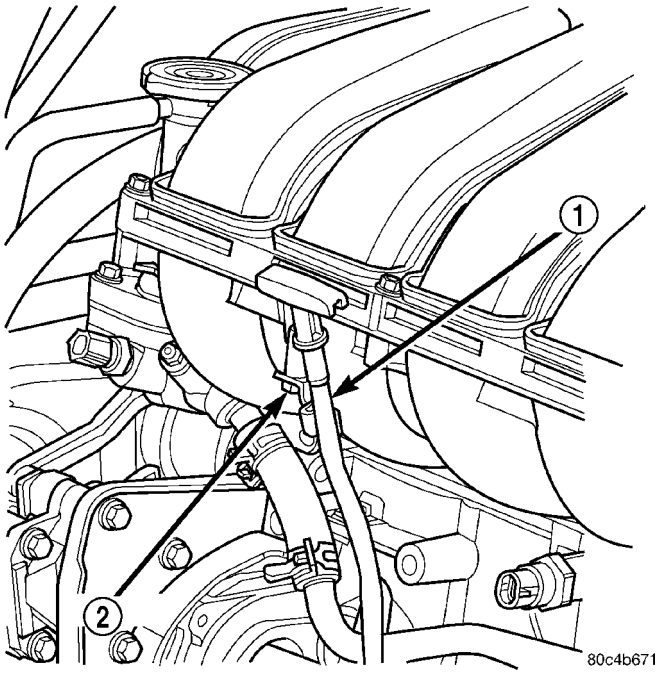

Fig. 147 Dipstick Tube

1 - DIPSTICK TUBE
2 - SCREW

INTAKE MANIFOLD (Continued)

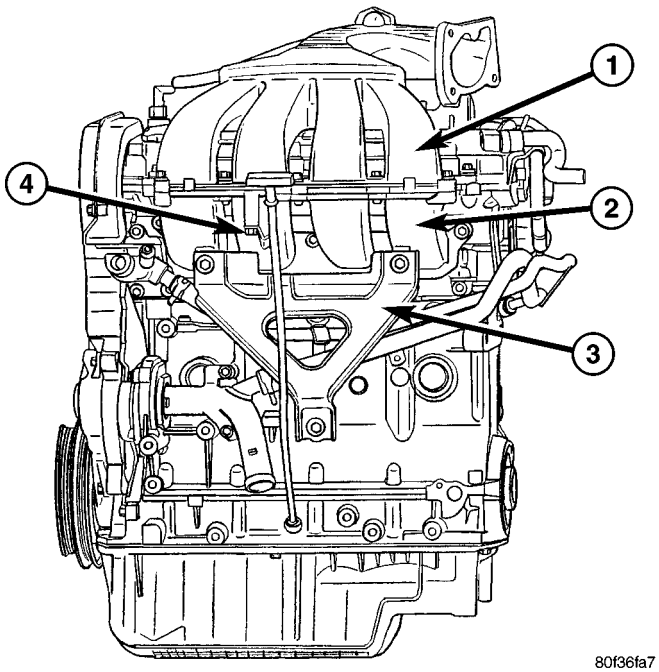

Fig. 148 Lower Intake Manifold Support Bracket - 2.4L Turbo

1 - UPPER INTAKE MANIFOLD
2 - LOWER INTAKE MANIFOLD
3 - SUPPORT BRACKET
4 - DIPSTICK TUBE SCREW

CLEANING

(1) Discard gasket(s).
(2) Clean all sealing surfaces.

INSPECTION

(1) Inspect manifold for cracks or distortion. Replace manifold if necessary.
(2) Inspect manifold for gasket surface damage or warpage. Replace manifold if necessary.

INSTALLATION

INSTALLATION - UPPER INTAKE MANIFOLD

Non-Turbo

(1) If lower intake manifold was covered during service, remove cover (Fig. 138).
(2) Clean all sealing surfaces. Replace seals as necessary.
(3) Position new seals on manifold, if replaced.
(4) Position upper intake manifold on lower intake manifold. Tighten upper intake manifold fasteners to 12 N·m (105 in. lbs.) in sequence shown in (Fig. 149).
(5) Install throttle body support bracket bolt at throttle body (Fig. 137). Tighten bolt to 28 N·m (20 ft. lbs.).

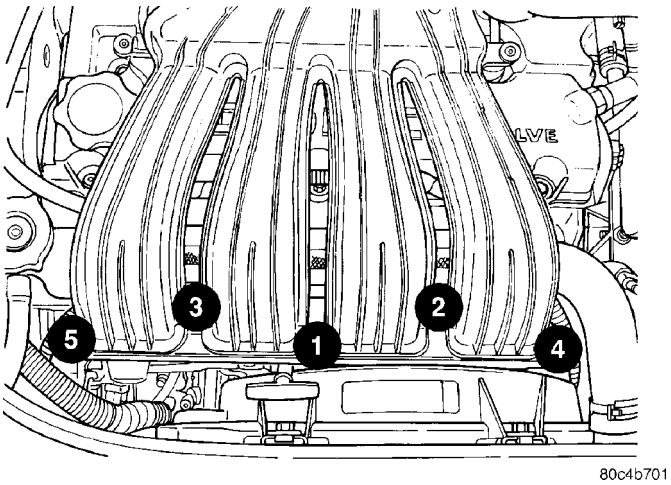

Fig. 149 Intake Manifold Tightening Sequence

(6) Connect PCV hose to intake manifold (Fig. 137).
(7) Connect manifold absolute pressure (MAP) electrical connector (Fig. 133).
(8) Connect proportional purge hoses (Fig. 135).
(9) Connect brake booster hose (Fig. 136).
(10) Connect Idle Air Control (IAC) motor and Throttle Position Sensor (TPS) wiring connectors (Fig. 134).
(11) Install throttle and speed control cables to bracket. Connect cables to the throttle lever.
(12) Connect negative cable to battery.
(13) Install air cleaner housing and clean air hose. Tighten clean air hose clamp to 1.7 N·m (15 in. lbs.).
(14) Connect make-up air hose and inlet air temperature sensor (Fig. 131).
(15) Install engine cover by positioning on ball studs and gently press down until seated (Fig. 132).

Turbo

(1) If lower intake manifold was covered during service, remove cover (Fig. 138).
(2) Clean all sealing surfaces. Replace upper intake manifold gasket.
(3) Position upper intake manifold on lower intake manifold. Tighten upper intake manifold fasteners to 28 N·m (250 in. lbs.) in sequence shown in (Fig. 150).
(4) Install upper intake manifold support bracket (Fig. 146). Torque fasteners to 28 N·m (250 in. lbs.).
(5) Connect purge solenoid hose to throttle body (Fig. 145).
(6) Connect brake booster vacuum hose and PCV hose to intake manifold (Fig. 145).
(7) Install the 2 screws for the throttle cable bracket and tighten to 12 N·m (105 in. lbs.).
(8) If equipped with speed control, install speed control cable to the throttle lever by sliding clasp in the hole used for throttle cable.

INTAKE MANIFOLD (Continued)

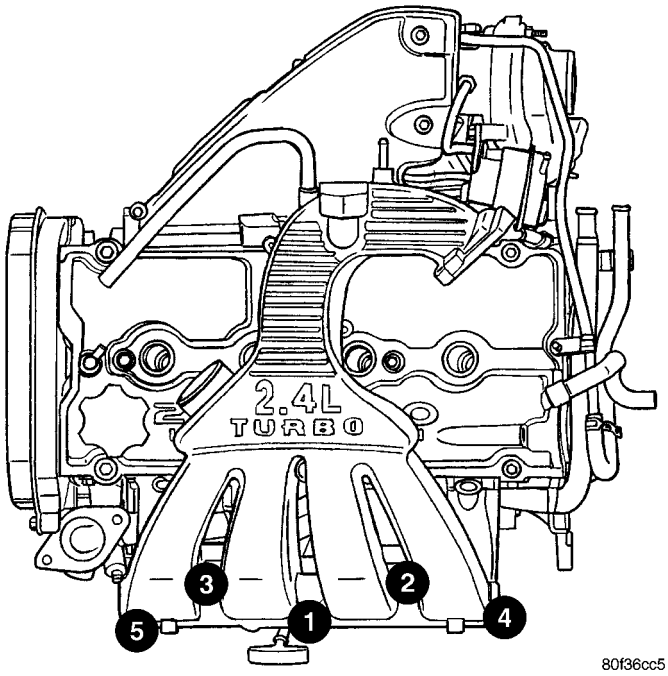

Fig. 150 Intake Manifold Tightening Sequence - 2.4L Turbo

(9) Install the throttle cable to the throttle body lever (Fig. 143).

(10) Install the throttle control shield (Fig. 142).

(11) Connect idle air control (IAC) motor and throttle position sensor connectors.

(12) Connect the MAP sensor connector (Fig. 141).

(13) Connect charge air cooler hose to throttle body (Fig. 139) and (Fig. 140). Tighten hose clamp to 1.7 N·m (15 in. lbs.).

(14) Connect negative battery cable.

INSTALLATION - LOWER INTAKE MANIFOLD

(1) Clean all gasket surfaces.

(2) **Naturally Aspirated Engine:** Position new seals on lower intake manifold, if replaced (Fig. 151).

(3) **Naturally Aspirated Engine:** Install lower intake manifold. Tighten fasteners to 12 N·m (105 in. lbs.) in sequence shown in (Fig. 152).

(4) **Turbocharged Engine:** Replace lower intake manifold gasket.

(5) **Turbocharged Engine:** Install lower intake manifold. Tighten fasteners to 28 N·m (250 in. lbs.) in sequence shown in (Fig. 152).

(6) **Turbocharger Equipped Engine:** Install fasteners for lower intake manifold support bracket (Fig. 148). Torque fasteners to 54 N·m (40 ft. lbs.).

(7) If removed, install the fuel rail assembly to intake manifold. Tighten screws to 23 N·m (200 in. lbs.).

(8) Connect fuel injector wiring harness.

(9) Inspect quick connect fittings for damage, replace if necessary (Refer to 14 - FUEL SYSTEM/

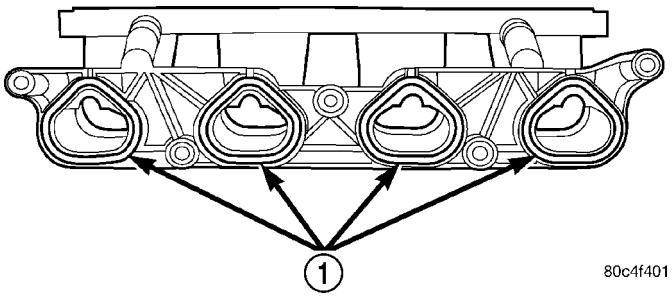

Fig. 151 Lower Intake Manifold Seals - Naturally Aspirated Engine

1 - SEALS

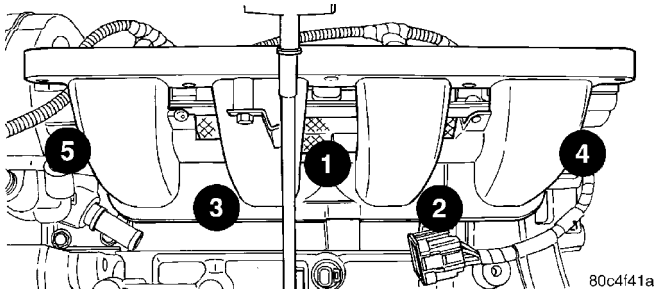

Fig. 152 Lower Intake Manifold Tightening Sequence

FUEL DELIVERY/QUICK CONNECT FITTING - STANDARD PROCEDURE). Lubricate tube with clean engine oil. Connect fuel supply hose to fuel rail assembly. Check connection by pulling on connector to insure it locked into position.

(10) Install the screw attaching the oil dipstick tube to lower intake manifold (Fig. 147) or (Fig. 148).

(11) Install coolant outlet connector and thermostat (Refer to 7 - COOLING/ENGINE/ENGINE COOLANT THERMOSTAT - INSTALLATION).

(12) Install radiator upper hose.

(13) Install upper intake manifold (Refer to 9 - ENGINE/MANIFOLDS/INTAKE MANIFOLD UPPER - INSTALLATION).

(14) Connect negative cable to battery.

(15) Fill the cooling system (Refer to 7 - COOLING/ENGINE - STANDARD PROCEDURE).

(16) With the DRBIII® scan tool use ASD Fuel System Test to pressurize system to check for leaks.

CAUTION: When using the ASD Fuel System Test, the Auto Shutdown (ASD) relay will remain energized for 7 minutes or until the ignition switch is turned to the OFF position, or Stop All Test is selected.

EXHAUST MANIFOLD

REMOVAL

NOTE: The exhaust manifold on Turbocharged equipped vehicles is serviced as an assembly with the Turbocharger. (Refer to 11 - EXHAUST SYSTEM/ TURBOCHARGER SYSTEM/TURBOCHARGER - REMOVAL).

(1) Remove clean air hose and air cleaner housing.
(2) Disconnect negative cable from battery.
(3) Disconnect throttle and speed control cables from the throttle lever and bracket.
(4) Disconnect MAP sensor electrical connector.
(5) Remove fasteners securing power steering fluid reservoir to cylinder head.
(6) Remove coolant recovery container (Refer to 7 - COOLING/ENGINE/COOLANT RECOVERY CONTAINER - REMOVAL).
(7) Remove bolts attaching upper heat shield (Fig. 153).
(8) Remove upper heat shield.

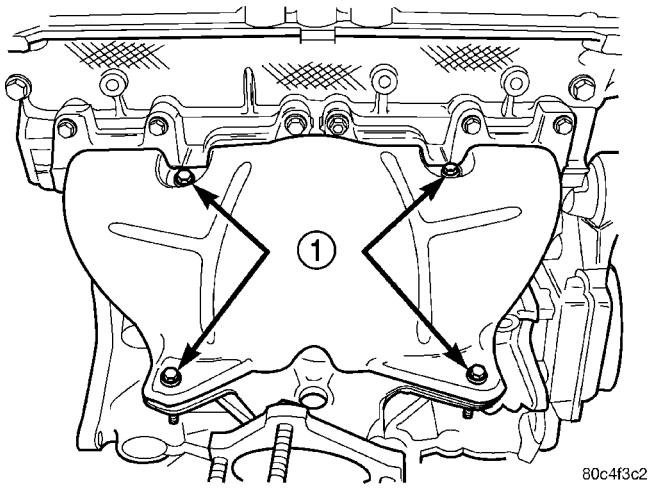

Fig. 153 Exhaust Manifold Heat Shield Bolts

1 - BOLTS

(9) Raise vehicle.
(10) Disconnect exhaust pipe from manifold (Fig. 154).
(11) Remove engine wiring heat shield (Fig. 155).
(12) Remove manifold support bracket (Fig. 156).

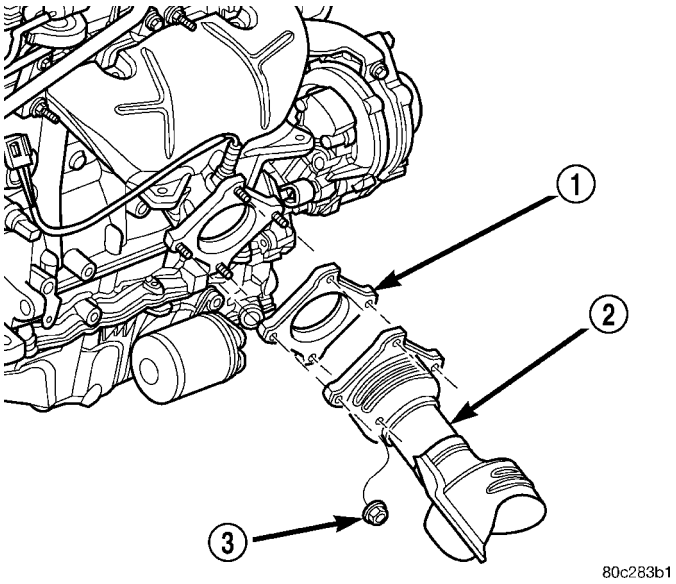

Fig. 154 Exhaust Manifold To Pipe Connection

1 - GASKET
2 - CATALYTIC CONVERTER
3 - NUT

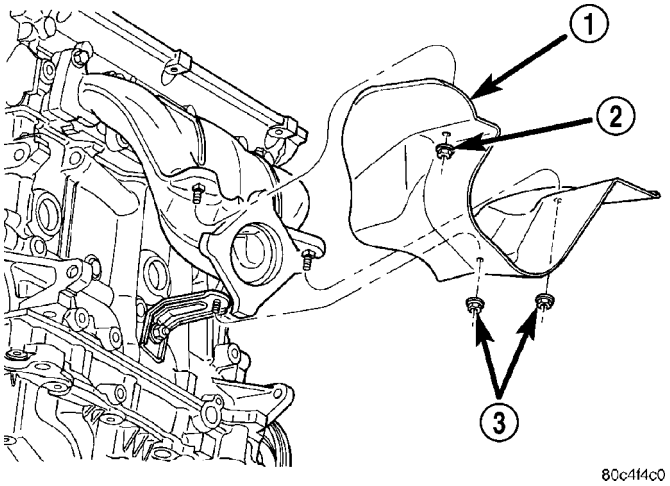

Fig. 155 Heat Shield—Engine Wiring

1 - HEAT SHIELD
2 - NUT
3 - NUT

EXHAUST MANIFOLD (Continued)

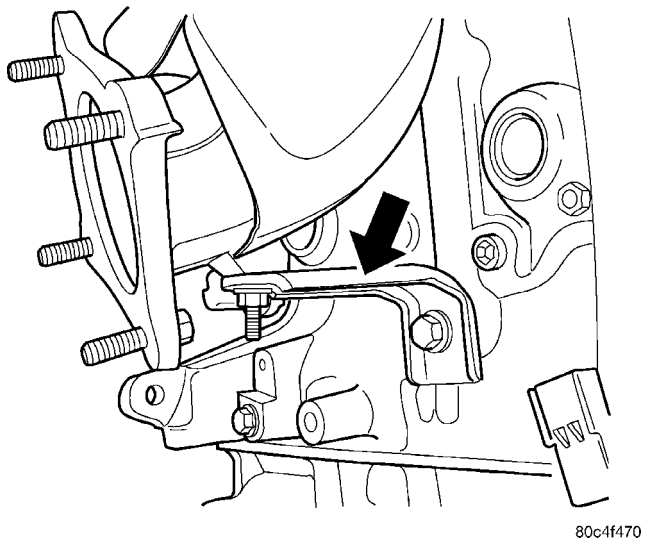

Fig. 156 Exhaust Manifold Support Bracket

(13) Remove lower exhaust manifold heat shield (Fig. 157).

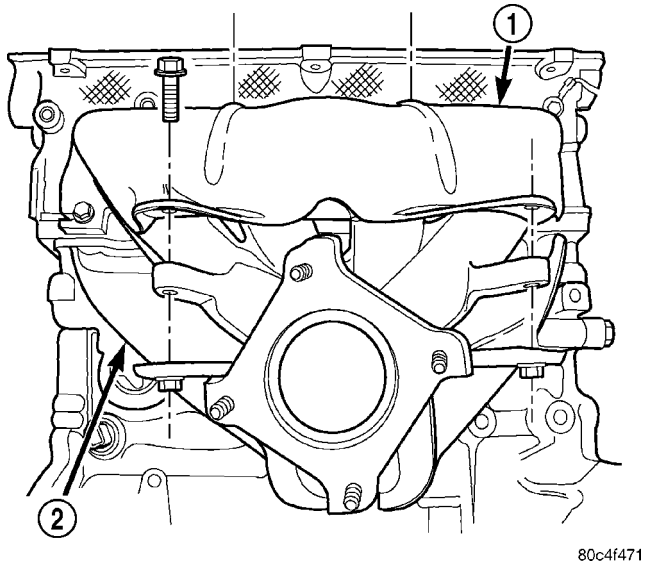

Fig. 157 Exhaust Manifold Heat Shields

1 - UPPER HEAT SHIELD
2 - LOWER HEAT SHIELD

(14) Disconnect oxygen sensor electrical connector.

(15) Remove exhaust manifold lower retaining fasteners.

(16) Lower vehicle and remove the upper exhaust manifold retaining fasteners.

(17) Remove exhaust manifold (Fig. 158) from above/between the engine and cowl panel.

(18) Remove and discard manifold gasket.

CLEANING

(1) Discard gasket (if equipped) and clean all surfaces of manifold and cylinder head.

INSPECTION

(1) Inspect manifold gasket surfaces for flatness with straight edge. Surface must be flat within 0.15 mm per 300 mm (0.006 in. per foot) of manifold length.

(2) Inspect manifolds for cracks or distortion. Replace manifold as necessary.

INSTALLATION

NOTE: The exhaust manifold on Turbocharged equipped vehicles is serviced as an assembly with the Turbocharger. (Refer to 11 - EXHAUST SYSTEM/ TURBOCHARGER SYSTEM/TURBOCHARGER - INSTALLATION).

(1) Install a new exhaust manifold gasket. **DO NOT APPLY SEALER**.

(2) Position exhaust manifold in place. Tighten fasteners, starting at center and progressing outward in both directions to 23 N·m (200 in. lbs.) (Fig. 158). Raise and lower vehicle for fastener access as necessary. Repeat tightening procedure until all fasteners are at specified torque.

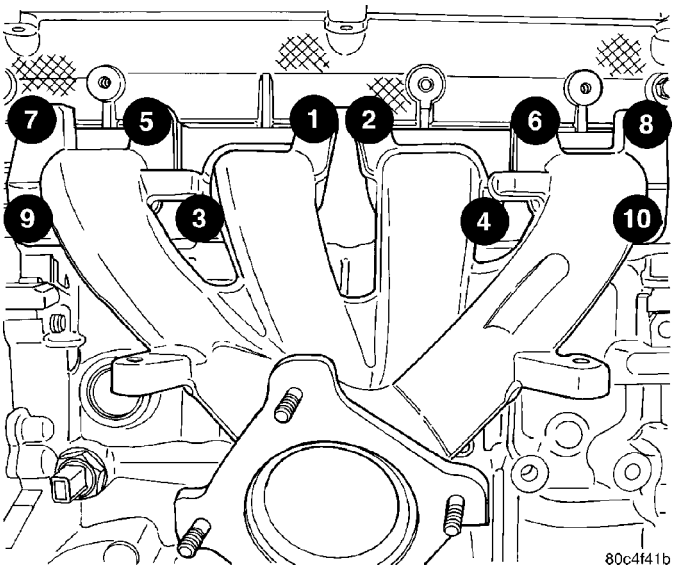

Fig. 158 Exhaust Manifold Tightening Sequence

(3) Install exhaust manifold heat shields (Fig. 157). Tighten bolts to 12 N·m (105 in. lbs.) (Fig. 153).

(4) Install exhaust manifold support bracket (Fig. 156).

(5) Install engine wiring heat shield (Fig. 155).

(6) Connect oxygen sensor electrical connector.

(7) Install exhaust pipe to manifold (Fig. 154). Tighten fasteners to 28 N·m (250 in. lbs.).

(8) Install coolant recovery container (Refer to 7 - COOLING/ENGINE/COOLANT RECOVERY CONTAINER - INSTALLATION).

EXHAUST MANIFOLD (Continued)

(9) Install fasteners securing power steering fluid reservoir to cylinder head.

(10) Connect MAP sensor electrical connector.

(11) Connect throttle and speed control cables to the throttle lever and bracket.

(12) Connect negative cable to battery.

(13) Install clean air hose and air cleaner housing.

TIMING BELT COVER(S)

REMOVAL

FRONT COVER—UPPER

(1) Remove upper torque strut attaching bolts and set strut aside (Refer to 9 - ENGINE/ENGINE MOUNTING/TORQUE STRUT - REMOVAL).

(2) **Turbocharger equipped vehicles:**

• Discharge and evacuate and air conditioning system (Refer to 24 - HEATING & AIR CONDITIONING - STANDARD PROCEDURE).

• Disconnect air conditioning lines at junction block near upper timing belt cover.

(3) Remove upper timing belt cover fasteners (Fig. 159) and remove cover.

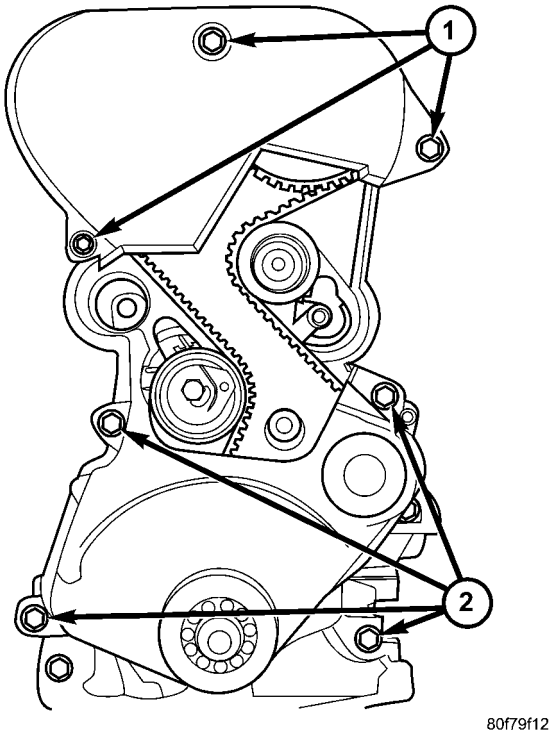

Fig. 159 Front Timing Belt Covers

1 - UPPER COVER FASTENERS
2 - LOWER COVER FASTENERS

FRONT COVER—LOWER

(1) Disconnect negative battery cable.

(2) Raise vehicle on hoist. Remove right front wheel.

(3) Remove the right splash shield.

(4) Remove accessory drive belts (Refer to 7 - COOLING/ACCESSORY DRIVE/DRIVE BELTS - REMOVAL).

(5) Remove crankshaft damper (Refer to 9 - ENGINE/ENGINE BLOCK/VIBRATION DAMPER - REMOVAL).

(6) Remove the lower torque strut (Refer to 9 - ENGINE/ENGINE MOUNTING/TORQUE STRUT - REMOVAL).

(7) Disconnect exhaust system from manifold.

(8) Disconnect A/C pressure switch at rear of compressor housing.

(9) Lower vehicle and support engine with a jack.

(10) Discharge A/C system and disconnect A/C lines at coupling block (Refer to 24 - HEATING & AIR CONDITIONING - STANDARD PROCEDURE).

(11) Remove upper torque strut (Refer to 9 - ENGINE/ENGINE MOUNTING/TORQUE STRUT - REMOVAL).

(12) Remove screw attaching ground strap to strut bracket.

(13) Remove torque strut bracket from strut tower.

(14) Remove upper radiator closure panel(Refer to 23 - BODY/EXTERIOR/RADIATOR CCLOSURE PANEL- REMOVAL).

(15) Remove power steering pump and bracket. Set pump aside. **Do not disconnect lines from pump.**

(16) With engine properly supported, remove right engine mount through bolt.

(17) Raise engine with jack until engine support bracket bolts are accessible (Fig. 160).

(18) Remove engine support bracket (Fig. 160).

(19) Remove timing belt cover fasteners and remove cover (Fig. 159).

REAR COVER

(1) Remove front timing belt covers. Refer to above procedures.

(2) Remove timing belt (Refer to 9 - ENGINE/VALVE TIMING/TIMING BELT AND SPROCKETS - REMOVAL).

(3) Remove timing belt idler pulley (Fig. 161).

(4) Remove camshaft sprockets. Use Special Tool 6847 to hold camshaft sprockets while removing the sprocket bolts (Fig. 162).

(5) Remove rear timing belt cover fasteners and remove cover from engine (Fig. 163).

INSTALLATION

FRONT COVER—UPPER

(1) Install timing belt cover and tighten fasteners to 6 N·m (50 in. lbs.) (Fig. 159).

TIMING BELT COVER(S) (Continued)

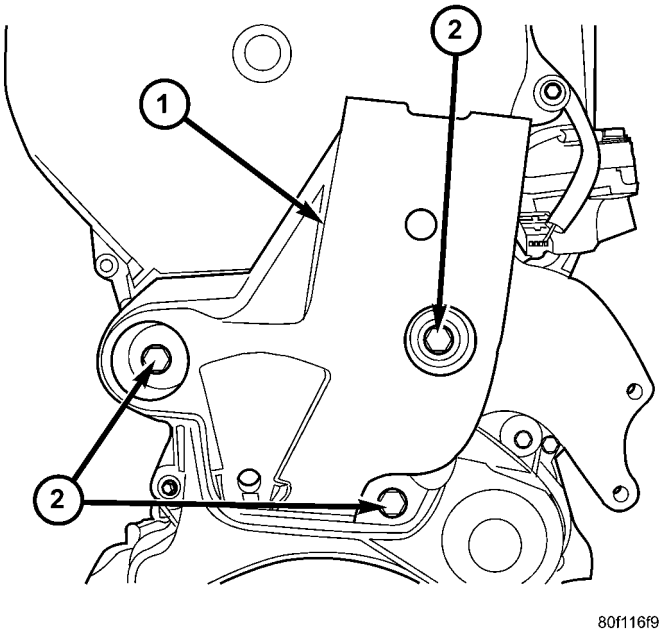

Fig. 160 Engine Support Bracket

1 - ENGINE SUPPORT BRACKET
2 - BOLTS - 61 N·m (45 ft. lbs.)

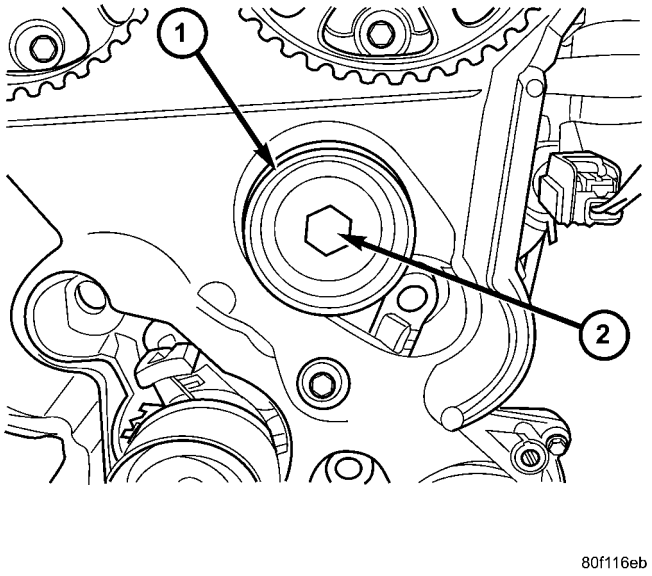

Fig. 161 Timing Belt Idler Pulley

1 - IDLER PULLEY
2 - BOLT

(2) Install upper torque strut (Refer to 9 - ENGINE/ENGINE MOUNTING/TORQUE STRUT - INSTALLATION).

(3) **Turbocharger equipped vehicles:**

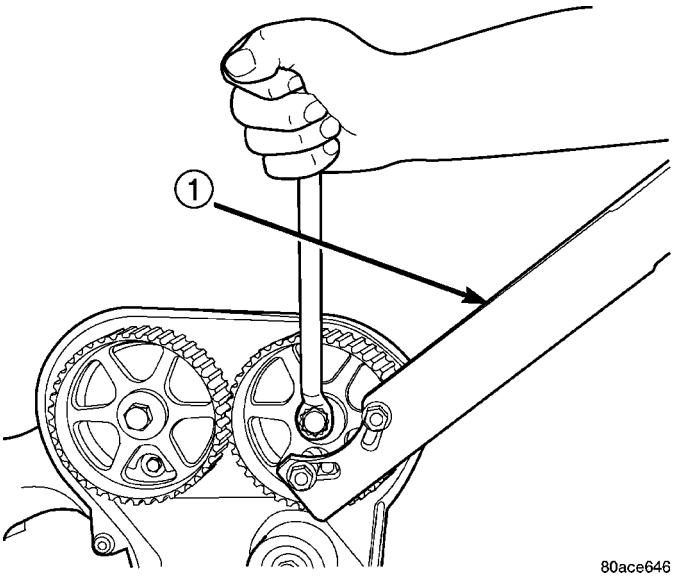

Fig. 162 Camshaft Sprocket—Removal/Installation

1 - SPECIAL TOOL 6847

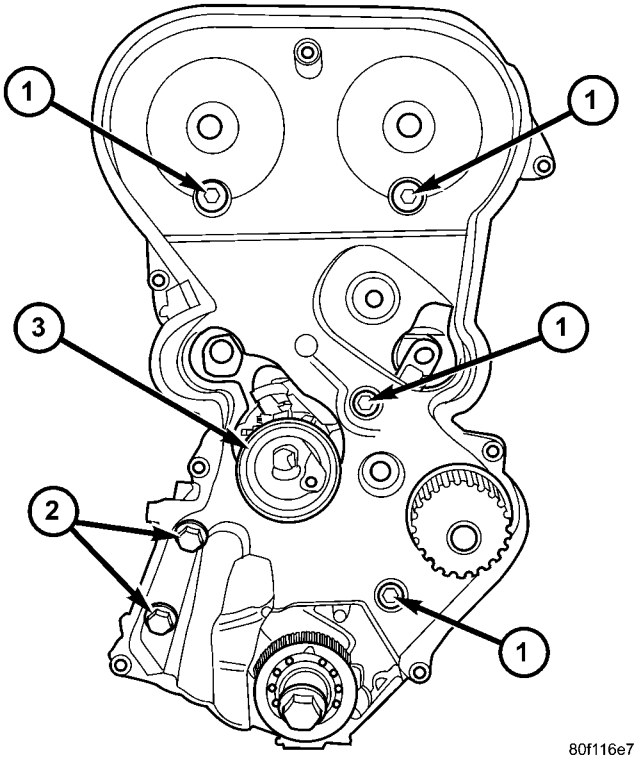

Fig. 163 Rear Timing Belt Cover Fasteners

1 - M6 BOLTS - 12 N·m (105 in. lbs.)
2 - M8 BOLTS - 28 N·m (250 in. lbs.)
3 - TIMING BELT TENSIONER

- Connect air conditioning lines at junction block near upper timing belt cover.
- Recharge air conditioning system (Refer to 24 - HEATING & AIR CONDITIONING - STANDARD PROCEDURE).

TIMING BELT COVER(S) (Continued)

(4) Perform torque strut adjustment procedure (Refer to 9 - ENGINE/ENGINE MOUNTING/ TORQUE STRUT - ADJUSTMENTS).

FRONT COVER—LOWER

(1) Install lower timing belt cover and tighten fasteners to 6 N·m (50 in. lbs.) (Fig. 159).

(2) Install right engine support bracket (Fig. 160). Ensure the power steering pump is properly located in mounting location on bracket. Tighten mount bracket bolts to 61 N·m (45 ft. lbs.).

(3) Lower engine into mounting position and install right engine mount through bolt. Tighten bolt to 118 N·m (87 ft. lbs.).

(4) Install power steering pump and bracket.

(5) Install upper radiator closure panel(Refer to 23 - BODY/EXTERIOR/RADIATOR CLOSURE PANEL-INSTALLATION).

(6) Install torque strut bracket to strut tower.

(7) Connect ground strap to bracket.

(8) Install upper torque strut.

(9) Connect A/C lines and charge A/C system (Refer to 24 - HEATING & AIR CONDITIONING - STANDARD PROCEDURE).

(10) Raise vehicle.

(11) Connect exhaust system to manifold.

(12) Connect A/C pressure switch connector.

(13) Install crankshaft damper (Refer to 9 - ENGINE/ENGINE BLOCK/VIBRATION DAMPER - INSTALLATION).

(14) Install accessory drive belts (Refer to 7 - COOLING/ACCESSORY DRIVE/DRIVE BELTS - INSTALLATION).

(15) Install lower torque strut (Refer to 9 - ENGINE/ENGINE MOUNTING/TORQUE STRUT - INSTALLATION).

(16) Perform torque strut adjustment procedure (Refer to 9 - ENGINE/ENGINE MOUNTING/ TORQUE STRUT - ADJUSTMENTS).

(17) Install right splash shield.

(18) Install right front wheel.

(19) Connect negative cable to battery.

REAR COVER

(1) Install rear timing belt cover and fasteners. Torque fasteners to values specified in (Fig. 163).

(2) Install timing belt idler pulley (Fig. 161). Torque timing belt idler pulley fastener to 61 N·m (45 ft. lbs.).

CAUTION: Do not use an impact wrench to tighten camshaft sprocket bolts. Damage to the camshaft-to-sprocket locating dowel pin may occur.

(3) Install camshaft sprockets. Hold sprockets with Special Tool 6847 while tightening center bolt to 115 N·m (85 ft. lbs.) (Fig. 162).

(4) Install timing belt (Refer to 9 - ENGINE/ VALVE TIMING/TIMING BELT AND SPROCKETS - INSTALLATION).

(5) Install front timing belt covers. Refer to above procedures.

TIMING BELT AND SPROCKETS

REMOVAL

REMOVAL - TIMING BELT

(1) Disconnect negative battery cable.

(2) Remove upper and lower front timing belt covers (Fig. 159). (Refer to 9 - ENGINE/VALVE TIMING/TIMING BELT COVER(S) - REMOVAL).

CAUTION: When aligning crankshaft and camshaft timing marks always rotate engine from crankshaft. Camshaft should not be rotated after timing belt is removed. Damage to valve components may occur. Always align timing marks before removing timing belt.

(3) Before the removal of the timing belt, rotate crankshaft until the TDC mark on oil pump housing aligns with the TDC mark on crankshaft sprocket (trailing edge of sprocket tooth) (Fig. 164).

NOTE: The crankshaft sprocket TDC mark is located on the trailing edge of the sprocket tooth. Failure to align trailing edge of sprocket tooth to TDC mark on oil pump housing will cause the camshaft timing marks to be misaligned.

(4) Loosen timing belt tensioner lock bolt (Fig. 165).

(5) Insert a 6 mm Allen wrench into the hexagon opening located on the top plate of the belt tensioner pulley (Fig. 165). Rotate the top plate **CLOCKWISE** until there is enough slack in timing belt to allow for removal.

(6) Remove timing belt.

CAUTION: If timing belt was damaged due to incorrect tracking (alignment), the belt tensioner pulley and bracket must be replaced as an assembly (Refer to 9 - ENGINE/VALVE TIMING/TIMING BELT TENSIONER & PULLEY - REMOVAL).

REMOVAL - CAMSHAFT SPROCKET(S)

(1) Remove upper and lower front timing belt covers (Refer to 9 - ENGINE/VALVE TIMING/TIMING BELT COVER(S) - REMOVAL).

TIMING BELT AND SPROCKETS (Continued)

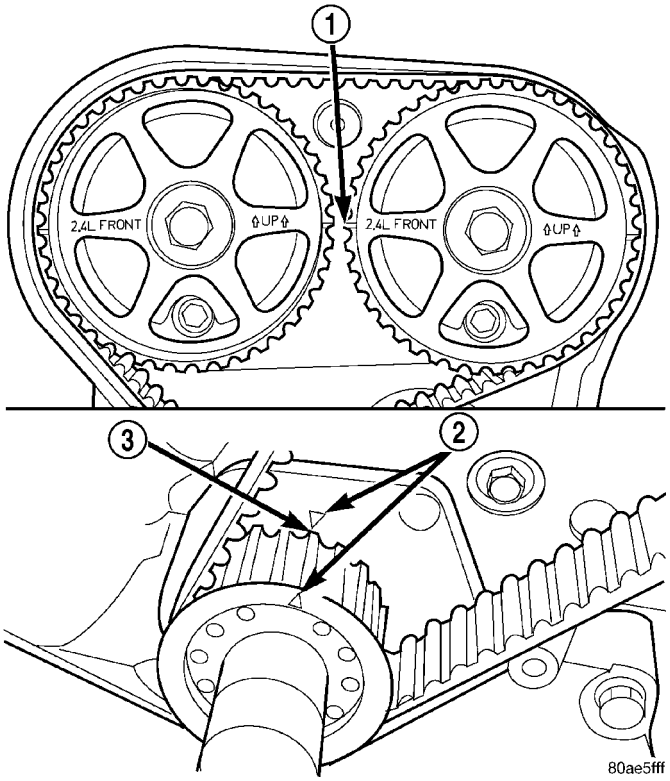

Fig. 164 Crankshaft and Camshaft Timing

1 - CAMSHAFT TIMING MARKS
2 - CRANKSHAFT TDC MARKS
3 - TRAILING EDGE OF SPROCKET TOOTH

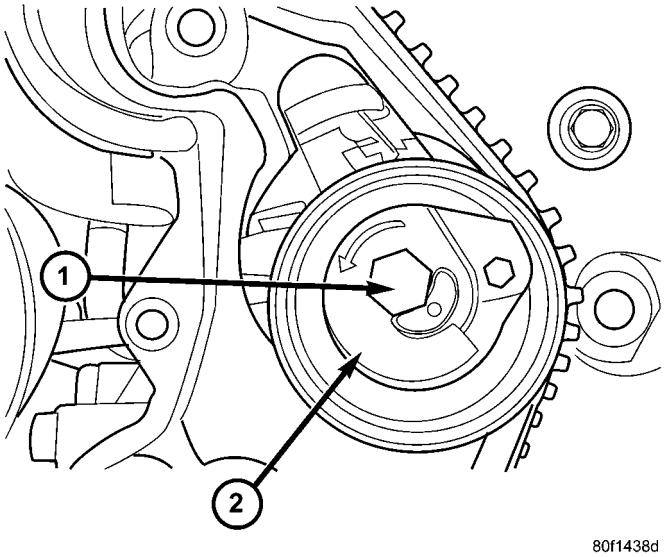

Fig. 165 Timing Belt Tensioner

1 - LOCK BOLT
2 - TOP PLATE

(2) Remove timing belt (Refer to 9 - ENGINE/VALVE TIMING/TIMING BELT - REMOVAL).

(3) Use Special Tool 6847 to hold camshaft sprockets while removing the sprocket bolt(s) (Fig. 166). Remove camshaft sprocket(s).

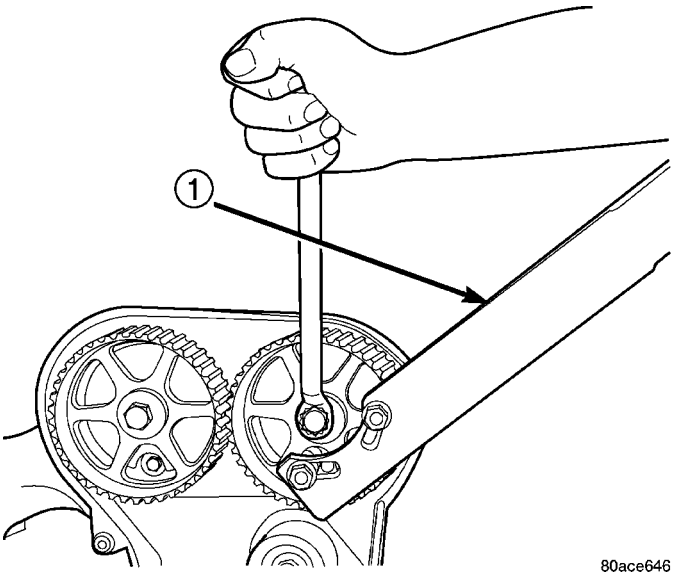

Fig. 166 Camshaft Sprocket—Removal/Installation

1 - SPECIAL TOOL 6847

REMOVAL - CRANKSHAFT SPROCKET

(1) Remove upper and lower front timing belt covers (Refer to 9 - ENGINE/VALVE TIMING/TIMING BELT COVER(S) - REMOVAL).

(2) Remove timing belt (Refer to 9 - ENGINE/VALVE TIMING/TIMING BELT - REMOVAL).

(3) Remove crankshaft sprocket using Special Tool 6793 and insert C-4685-C2 (Fig. 167).

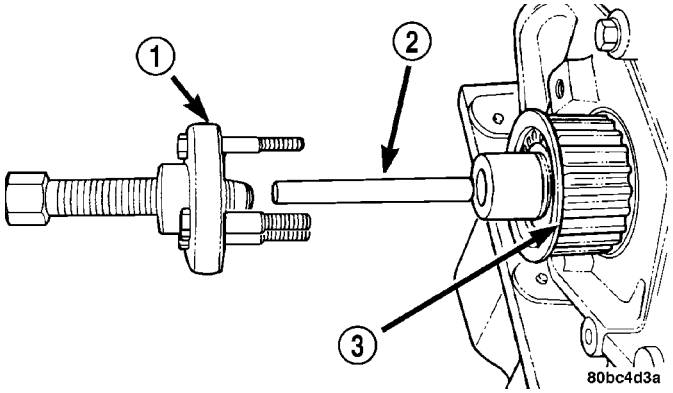

Fig. 167 Crankshaft Sprocket - Removal

1 - SPECIAL TOOL 6793
2 - SPECIAL TOOL C-4685–C2
3 - CRANKSHAFT SPROCKET

INSTALLATION

INSTALLATION - CRANKSHAFT SPROCKET

(1) Install crankshaft sprocket using Special Tool 6792 (Fig. 168).

TIMING BELT AND SPROCKETS (Continued)

(2) Install timing belt (Refer to 9 - ENGINE/VALVE TIMING/TIMING BELT - INSTALLATION).

(3) Install upper and lower front timing belt covers (Refer to 9 - ENGINE/VALVE TIMING/TIMING BELT COVER(S) - INSTALLATION).

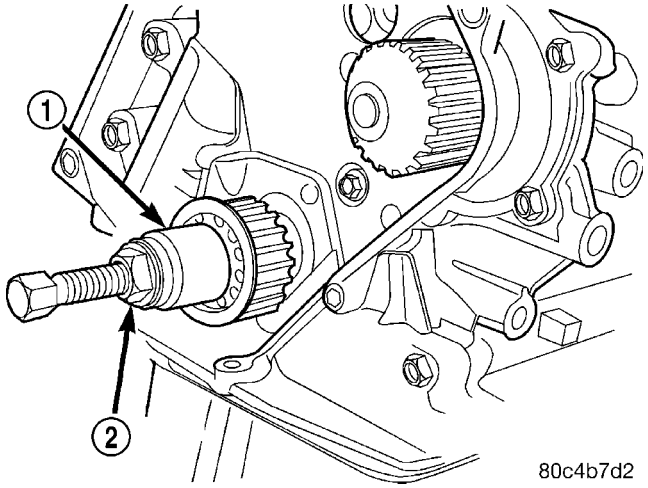

Fig. 168 Crankshaft Sprocket - Installation

1 - SPECIAL TOOL 6792
2 - TIGHTEN NUT TO INSTALL

INSTALLATION - CAMSHAFT SPROCKET(S)

CAUTION: Do not use an impact wrench to tighten camshaft sprocket bolts. Damage to the camshaft-to-sprocket locating dowel pin may occur.

(1) Install camshaft sprockets. Hold sprockets with Special Tool 6847 while tightening center bolt to 115 N·m (85 ft. lbs.) (Fig. 166).

(2) Install timing belt (Refer to 9 - ENGINE/VALVE TIMING/TIMING BELT - INSTALLATION).

(3) Install upper and lower front timing belt covers (Refer to 9 - ENGINE/VALVE TIMING/TIMING BELT COVER(S) - INSTALLATION).

INSTALLATION - TIMING BELT

(1) Set crankshaft sprocket to TDC by aligning the sprocket with the arrow on the oil pump housing.

(2) Set camshafts timing marks so that the exhaust camshaft sprocket is a 1/2 notch below the intake camshaft sprocket (Fig. 169).

CAUTION: Ensure that the arrows on both camshaft sprockets are facing up.

(3) Install timing belt. Starting at the crankshaft, go around the water pump sprocket, idler pulley, camshaft sprockets and then around the tensioner (Fig. 170).

(4) Move the exhaust camshaft sprocket counter-clockwise (Fig. 170) to align marks and take up belt slack.

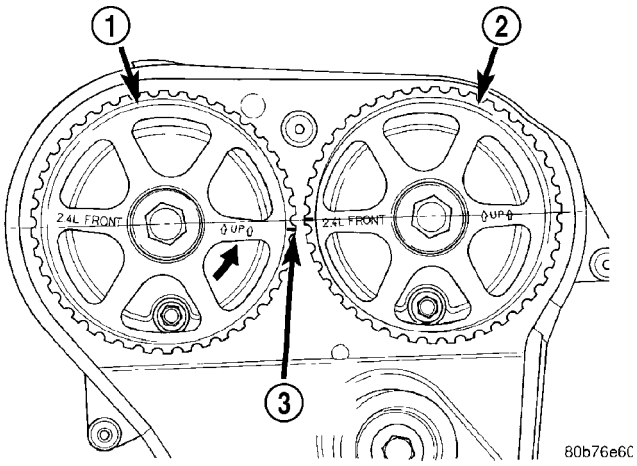

Fig. 169 Camshaft Sprocket Alignment For Timing Belt Installation

1 - CAMSHAFT SPROCKET-EXHAUST
2 - CAMSHAFT SPROCKET-INTAKE
3 - 1/2 NOTCH LOCATION

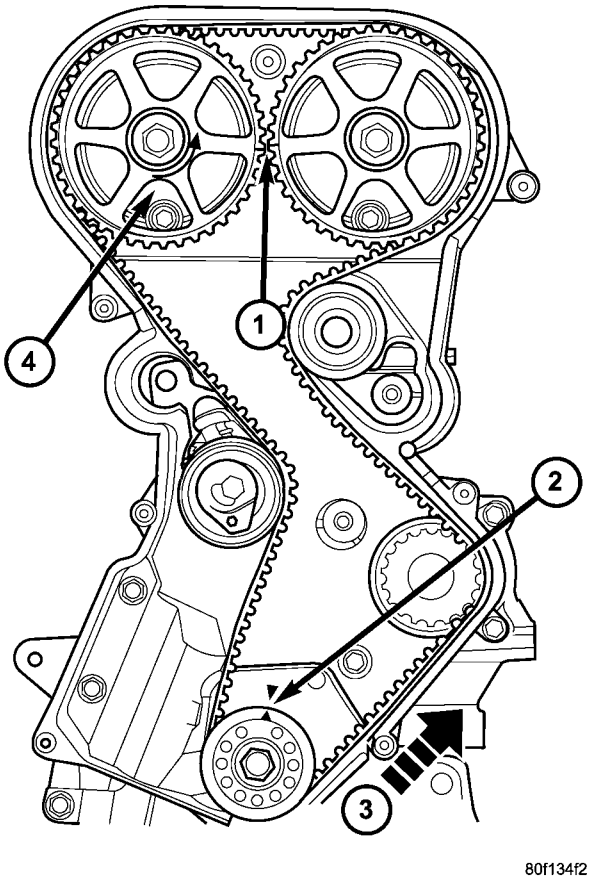

Fig. 170 Timing Belt Installation

1 - CAMSHAFT TIMING MARKS 1/2 NOTCH LOCATION
2 - CRANKSHAFT AT TDC
3 - INSTALL BELT IN THIS DIRECTION
4 - ROTATE CAMSHAFT SPROCKET TO TAKE UP BELT SLACK

TIMING BELT AND SPROCKETS (Continued)

(5) Insert a 6 mm Allen wrench into the hexagon opening located on the top plate of the belt tensioner pulley. Rotate the top plate **COUNTERCLOCKWISE**. The tensioner pulley will move against the belt and the tensioner setting notch will eventually start to move clockwise. Watching the movement of the setting notch, continue rotating the top plate counterclockwise until the setting notch is aligned with the spring tang (Fig. 171). Using the allen wrench to prevent the top plate from moving, torque the tensioner lock bolt to 25 N·m (220 in. lbs.). Setting notch and spring tang should remain aligned after lock nut is torqued.

(6) Remove allen wrench and torque wrench.

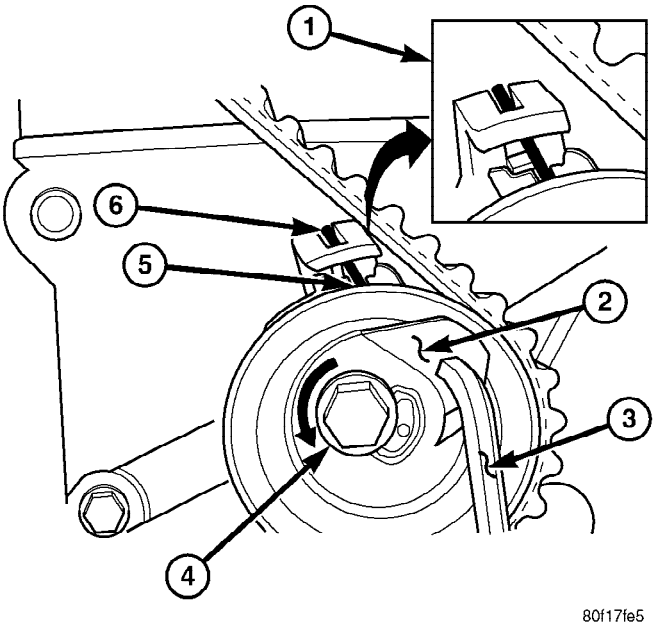

Fig. 171 Timing Belt Tension Adjustment

1 - ALIGN SETTING NOTCH WITH SPRING TANG
2 - TOP PLATE
3 - 6mm ALLEN WRENCH
4 - LOCK BOLT
5 - SETTING NOTCH
6 - SPRING TANG

NOTE: Repositioning the crankshaft to the TDC position must be done only during the CLOCKWISE rotation movement. If TDC is missed, rotate a further two revolutions until TDC is achieved. DO NOT rotate crankshaft counterclockwise as this will make verification of proper tensioner setting impossible.

(7) Rotate the crankshaft CLOCKWISE two complete revolutions manually for seating of the belt, until the crankshaft is repositioned at the TDC position. Verify that the camshaft and crankshaft timing marks are in proper position (Fig. 172).

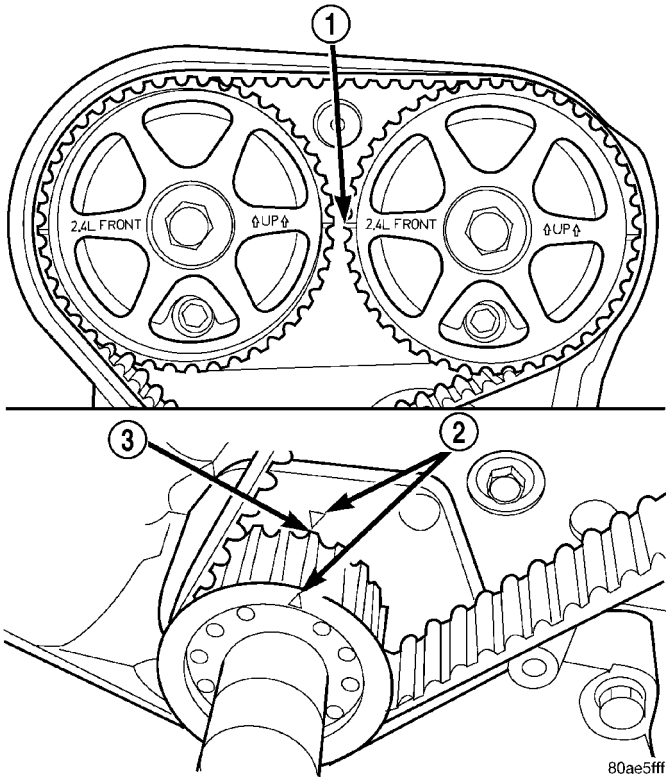

Fig. 172 Crankshaft and Camshaft Timing

1 - CAMSHAFT TIMING MARKS
2 - CRANKSHAFT TDC MARKS
3 - TRAILING EDGE OF SPROCKET TOOTH

(8) Check if the spring tang is within the tolerance window (Fig. 173). If the spring tang is within the tolerance window, the installation process is complete and nothing further is required. If the spring tang is not within the tolerance window, repeat Steps 5 through 7.

(9) Install upper and lower front timing belt covers (Fig. 159). (Refer to 9 - ENGINE/VALVE TIMING/TIMING BELT COVER(S) - INSTALLATION).

(10) Connect negative cable to battery.

TIMING BELT AND SPROCKETS (Continued)

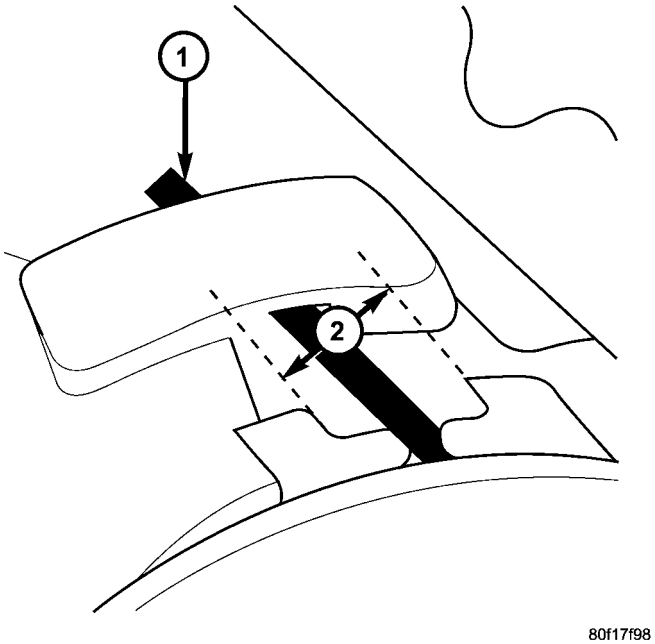

Fig. 173 Timing Belt Tension Verification

1 - SPRING TANG
2 - TOLERANCE WINDOW

TIMING BELT TENSIONER & PULLEY

REMOVAL

(1) Remove timing belt (Refer to 9 - ENGINE/ VALVE TIMING/TIMING BELT AND SPROCKETS - REMOVAL).

(2) Remove timing belt idler pulley.

(3) Hold camshaft sprocket with Special Tool 6847 while removing bolt (Fig. 174). Remove both camshaft sprockets.

(4) Remove rear timing belt cover fasteners and remove cover from engine (Fig. 175).

(5) Remove lower bolt attaching timing belt tensioner assembly to engine and remove tensioner **as an assembly** (Fig. 176).

INSTALLATION

(1) Align timing belt tensioner assembly to engine and install lower mounting bolt **but do not tighten** (Fig. 176). To properly align tensioner assembly to engine; temporarily install one of the engine bracket mounting bolts (M10) 5–7 turns into the tensioner assembly upper mounting location (Fig. 176).

(2) Torque the tensioner's lower mounting bolt to 61 N·m (45 ft. lbs.). Remove the upper bolt used for tensioner alignment.

(3) Install rear timing belt cover and fasteners (Fig. 175).

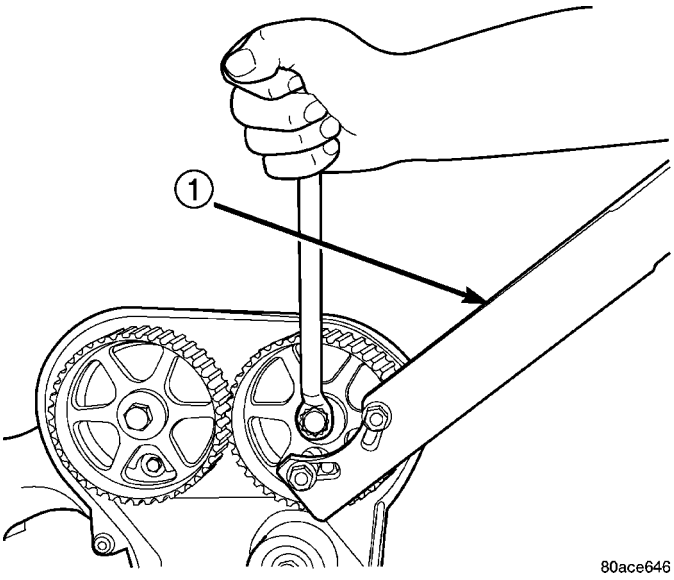

Fig. 174 Camshaft Sprockets

1 - SPECIAL TOOL 6847

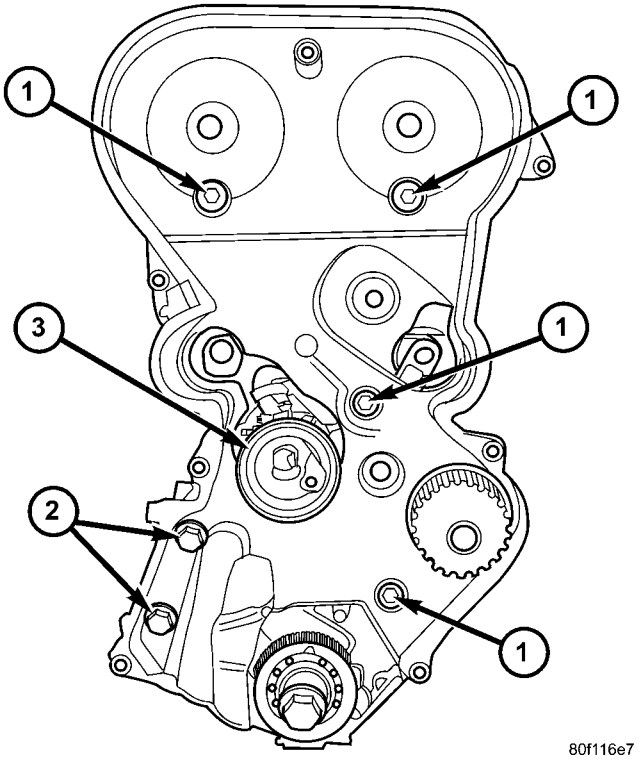

Fig. 175 Rear Timing Belt Cover Fasteners

1 - M6 BOLTS - 12 N·m (105 in. lbs.)
2 - M8 BOLTS - 28 N·m (250 in. lbs.)
3 - TIMING BELT TENSIONER

(4) Install timing belt idler pulley and torque mounting bolt to 61 N·m (45 ft. lbs.).

TIMING BELT TENSIONER & PULLEY (Continued)

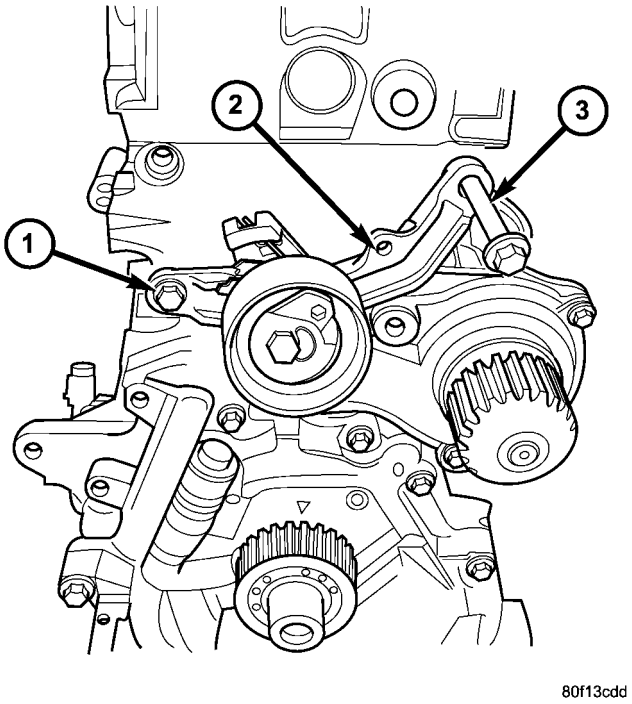

Fig. 176 Timing Belt Tensioner/Bracket Assembly

1 - BOLT
2 - TENSIONER ASSEMBLY
3 - BOLT-INSTALL FOR PROPER ALIGNMENT

CAUTION: Do not use an impact wrench to tighten camshaft sprocket bolts. Damage to the camshaft-to-sprocket locating dowel pin may occur.

(5) Install camshaft sprockets. Use Special Tool 6847 to hold sprockets (Fig. 174) and tighten bolts to 115 N·m (85 ft. lbs.).

(6) Install timing belt (Refer to 9 - ENGINE/VALVE TIMING/TIMING BELT AND SPROCKETS - INSTALLATION).

BALANCE SHAFTS AND CARRIER ASSEMBLY

DESCRIPTION

The 2.4L engine is equipped with two nodular cast iron balance shafts installed in a cast aluminum carrier attached to the lower cylinder block (Fig. 177).

OPERATION

The balance shafts are driven by the crankshaft via a roller chain and sprockets. The balance shafts are connected by helical gears. The dual counter rotating shafts decrease second order vertical shaking forces caused by component movement.

REMOVAL

BALANCE SHAFTS/CHAIN/SPROCKETS

NOTE: For service procedures requiring only temporary relocation of carrier assembly refer to BALANCE SHAFT CARRIER procedure below.

(1) Drain engine oil.

(2) Remove the oil pan and pick-up tube (Refer to 9 - ENGINE/LUBRICATION/OIL PAN - REMOVAL).

(3) If replacing crankshaft sprocket, remove oil pump (Refer to 9 - ENGINE/LUBRICATION/OIL PUMP - REMOVAL).

(4) Remove chain cover, guide and tensioner (Fig. 178).

(5) Remove screw retaining balance shaft drive sprocket (Fig. 179). Remove chain and sprocket.

(6) Using two wide pry bars, work the crankshaft sprocket back and forth until it is off the crankshaft-shaft.

(7) Remove gear cover retaining stud (double ended to also retain chain guide). Remove cover and balance shaft gears (Fig. 180).

(8) Remove rear cover and balance shafts (Fig. 181).

(9) Remove four carrier to crankcase attaching bolts to separate carrier from engine bedplate.

BALANCE SHAFTS AND CARRIER ASSEMBLY (Continued)

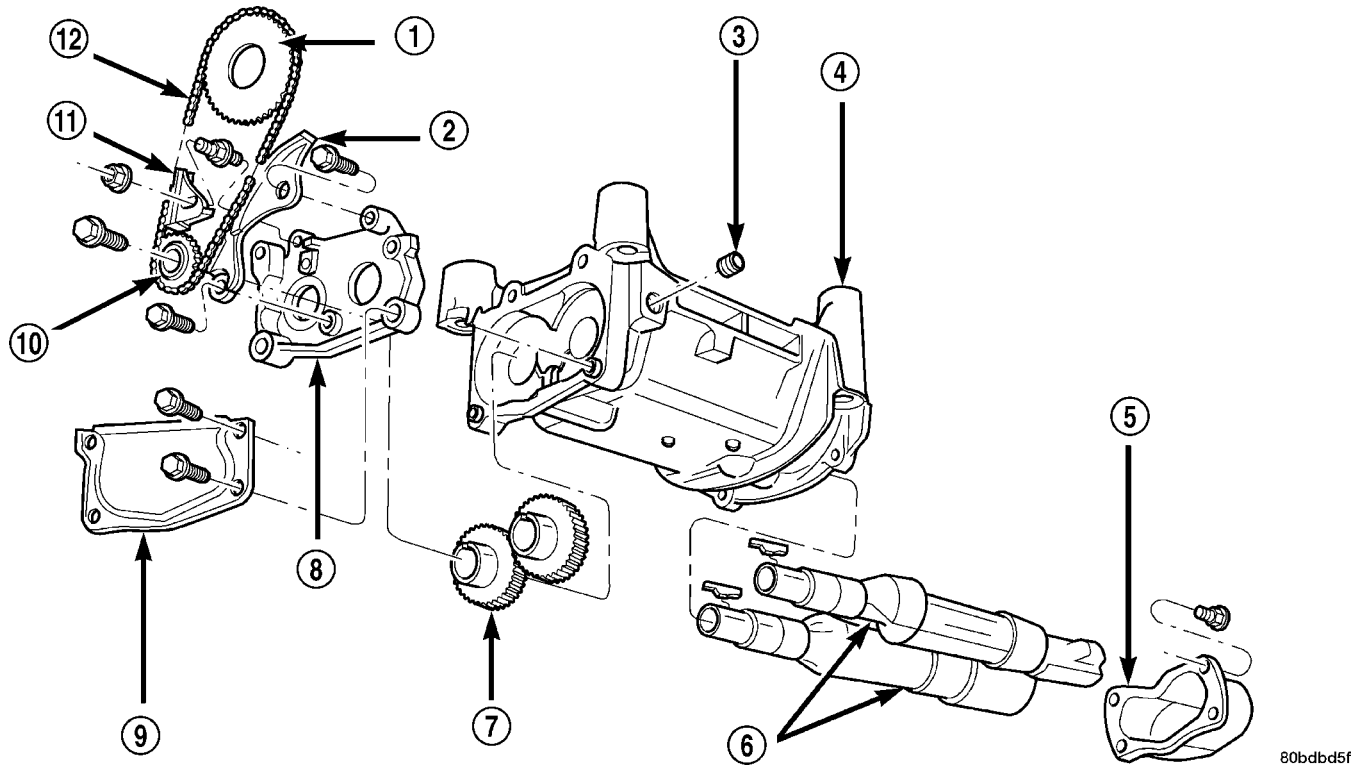

Fig. 177 Balance Shafts and Carrier Assembly

1 - SPROCKET
2 - TENSIONER
3 - PLUG
4 - CARRIER
5 - REAR COVER
6 - BALANCE SHAFTS
7 - GEARS
8 - GEAR COVER
9 - CHAIN COVER
10 - SPROCKET
11 - GUIDE
12 - CHAIN

BALANCE SHAFT CARRIER

The following components will remain intact during carrier removal: Gear cover, gears, balance shafts and the rear cover (Fig. 177).

(1) Drain engine oil.

(2) Remove the oil pan and pick-up tube (Refer to 9 - ENGINE/LUBRICATION/OIL PAN - REMOVAL).

(3) Remove chain cover, guide and tensioner (Fig. 178).

(4) Remove screw retaining balance shaft drive sprocket (Fig. 179).

(5) Move balance shaft inboard through drive chain sprocket. Sprocket will hang in lower chain loop.

(6) Remove carrier to crankcase attaching bolts to remove carrier.

INSTALLATION

BALANCE SHAFT INSTALLATION/TIMING

Balance shaft and carrier assembly installation is the reverse of the removal procedure. **During installation crankshaft-to-balance shaft timing must be established. Refer to Timing procedure in this section.**

(1) With balance shafts installed in carrier (Fig. 177) position carrier on crankcase and install four attaching bolts and tighten to 54 N·m (40 ft. lbs.).

(2) Turn balance shafts until both shaft key ways are up, parallel to vertical centerline of engine. Install short hub drive gear on sprocket driven shaft and long hub gear on gear driven shaft. After installation gear and balance shaft keyways must be up with gear timing marks meshed as shown in (Fig. 182).

(3) Install gear cover and tighten double ended stud/washer fastener to 12 N·m (105 in. lbs.).

(4) Align flat on balance shaft drive sprocket to the flat on crankshaft (Fig. 183).

(5) Install balance shaft drive sprocket on crankshaft using Special Tool 6052 (Fig. 184).

(6) Turn crankshaft until number 1 cylinder is at top dead center (TDC). The timing marks on the chain sprocket should line up with the parting line on the left side of number one main bearing cap. (Fig. 185).

BALANCE SHAFTS AND CARRIER ASSEMBLY (Continued)

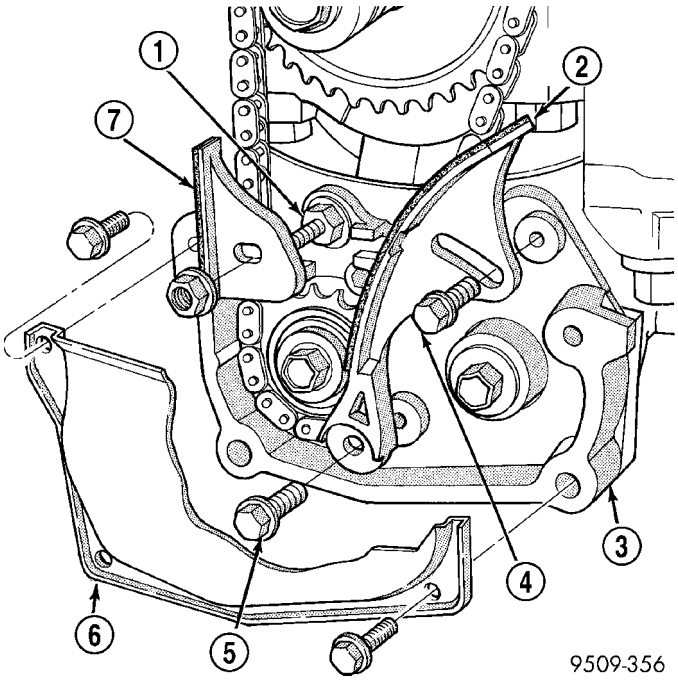

Fig. 178 Chain Cover, Guide and Tensioner

1 - STUD
2 - TENSIONER (ADJUSTER)
3 - GEAR COVER
4 - ADJUST SCREW
5 - PIVOT SCREW
6 - CHAIN COVER (CUTAWAY)
7 - GUIDE

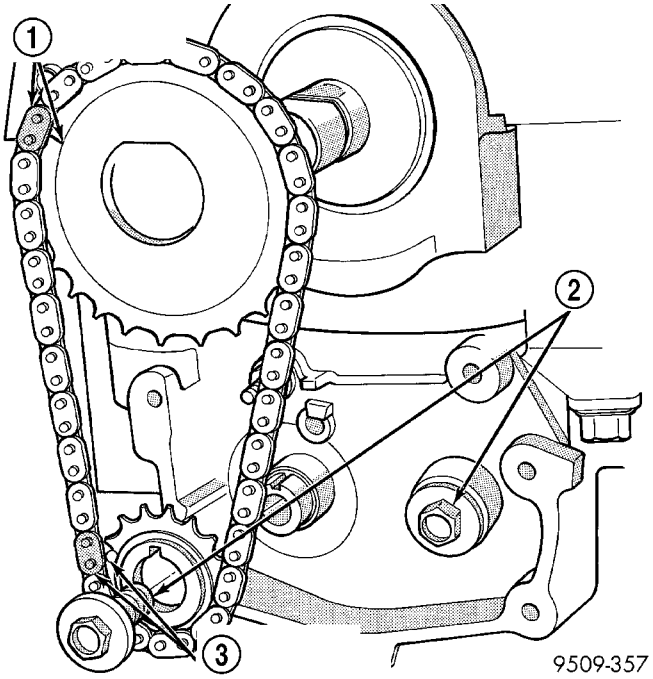

Fig. 179 Drive Chain and Sprockets

1 - NICKEL PLATED LINK AND MARK
2 - GEAR/SPROCKET SCREWS
3 - NICKEL PLATED LINK AND DOT

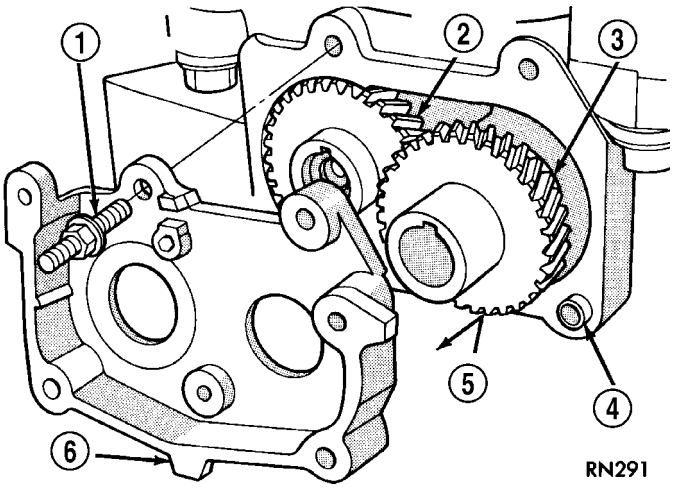

Fig. 180 Gear Cover and Gears

1 - STUD (DOUBLE ENDED)
2 - DRIVE GEAR
3 - DRIVEN GEAR
4 - CARRIER DOWEL
5 - GEAR(S)
6 - GEAR COVER

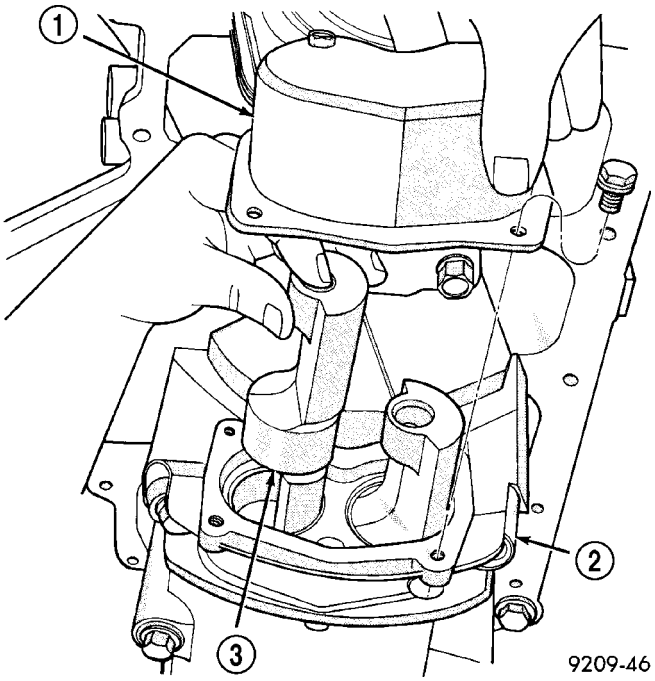

Fig. 181 Balance Shaft - Removal/Installation

1 - REAR COVER
2 - CARRIER
3 - BALANCE SHAFT

(7) Place chain over crankshaft sprocket so that the plated link of the chain is over the number 1 cylinder timing mark on the balance shaft crankshaft sprocket (Fig. 185).

(8) Place balance shaft sprocket into the timing chain (Fig. 185) and align the timing mark on the

BALANCE SHAFTS AND CARRIER ASSEMBLY (Continued)

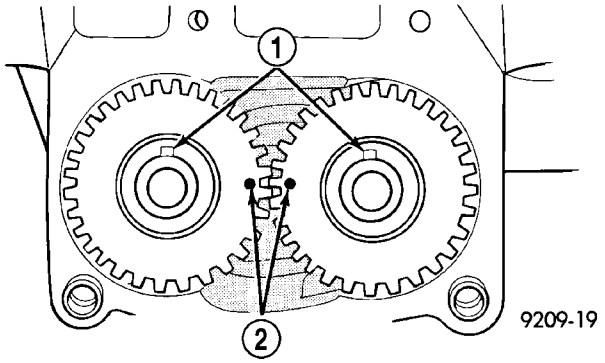

Fig. 182 Gear Timing

1 - KEY WAYS UP
2 - GEAR ALIGNMENT DOTS

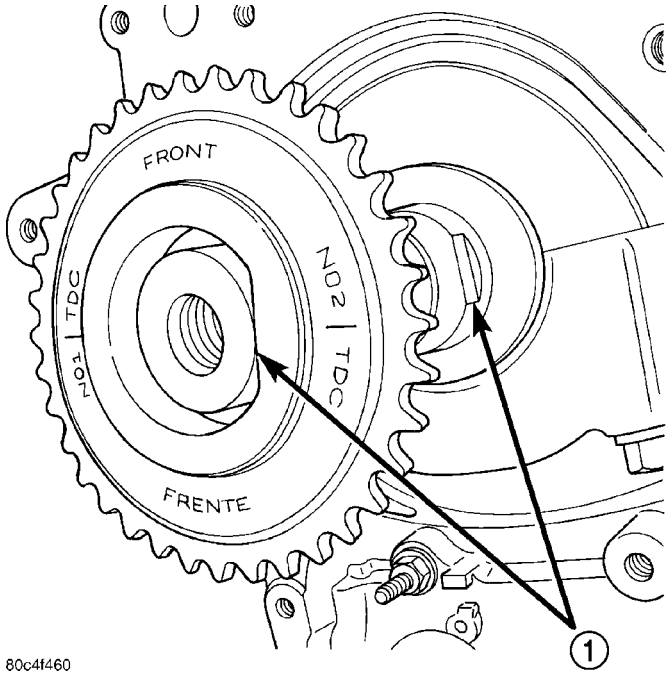

Fig. 183 Balance Shaft Sprocket Alignment to Crankshaft

1 - ALIGN FLATS

sprocket (dot) with the (lower) plated link on the chain.

NOTE: The lower plated link is 8 links from the upper link.

(9) With balance shaft keyways pointing up (12 o'clock) slide the balance shaft sprocket onto the nose of the balance shaft. The balance shaft may have to be pushed in slightly to allow for clearance.

NOTE: THE TIMING MARK ON THE SPROCKET, THE (LOWER) NICKEL PLATED LINK, AND THE ARROW ON THE SIDE OF THE GEAR COVER SHOULD LINE UP WHEN THE BALANCE SHAFTS ARE TIMED CORRECTLY.

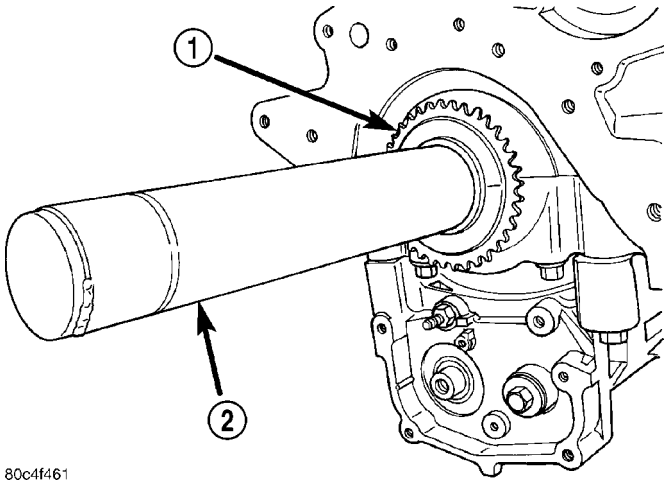

Fig. 184 Balance Shaft Drive

1 - SPROCKET
2 - SPECIAL TOOL 6052

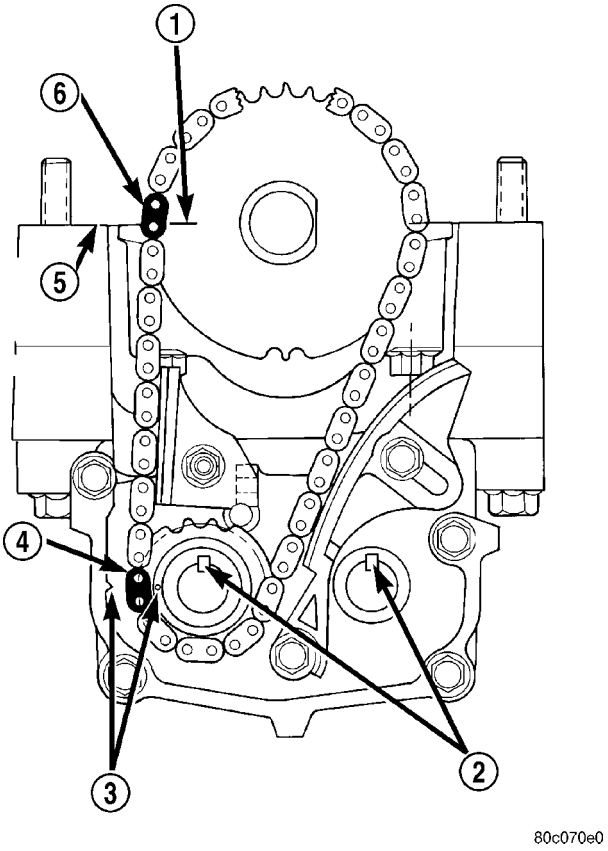

Fig. 185 Balance Shaft Timing

1 - MARK ON SPROCKET
2 - KEYWAYS UP
3 - ALIGN MARKS
4 - PLATED LINK
5 - PARTING LINE (BEDPLATE TO BLOCK)
6 - PLATED LINK

BALANCE SHAFTS AND CARRIER ASSEMBLY (Continued)

(10) If the sprockets are timed correctly, install the balance shaft bolts and tighten to 28 N·m (250 in. lbs.). A wood block placed between crankcase and crankshaft counterbalance will prevent crankshaft and gear rotation.

(11) **CHAIN TENSIONING:**

(a) Install chain tensioner loosely assembled.

(b) Position guide on double ended stud making sure tab on the guide fits into slot on the gear cover. Install and tighten nut/washer assembly to 12 N·m (105 in. lbs.).

(c) Place a shim 1 mm (0.039 in.) thick x 70 mm (2.75 in.) long between tensioner and chain. Push tensioner and shim up against the chain. **Apply firm pressure 2.5–3 Kg (5.5–6.6 lbs.) directly behind the adjustment slot to take up all slack.** Chain must have shoe radius contact as shown in (Fig. 186).

(d) With the load applied, tighten top tensioner bolt first, then bottom pivot bolt. Tighten bolts to 12 N·m (105 in. lbs.). Remove shim.

(e) Install carrier covers and tighten screws to 12 N·m (105 in. lbs.).

(12) If removed, install oil pump (Refer to 9 - ENGINE/LUBRICATION/OIL PUMP - INSTALLATION).

(13) Install pick-up tube and oil pan (Refer to 9 - ENGINE/LUBRICATION/OIL PAN - INSTALLATION).

(14) Fill engine crankcase with proper oil to correct level.

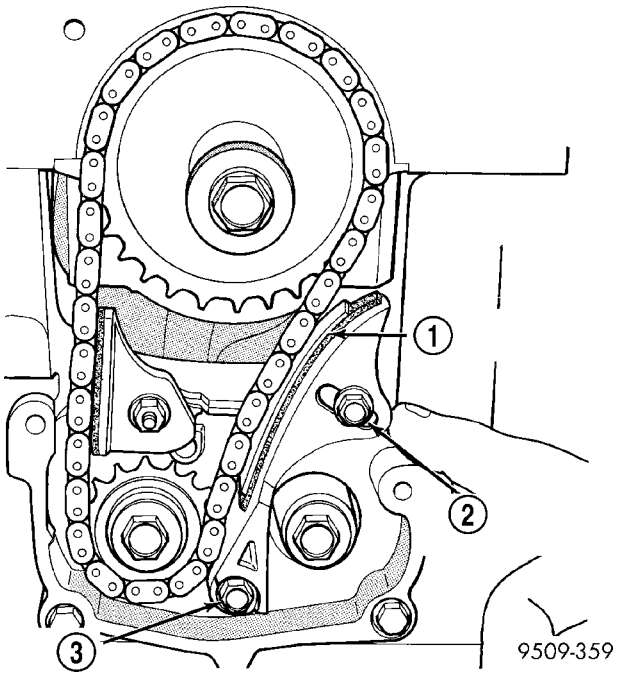

Fig. 186 Chain Tension Adjustment

1 - 1MM (0.039 IN.) SHIM
2 - TENSIONER (ADJUSTER) BOLT
3 - PIVOT BOLT

EXHAUST SYSTEM AND TURBOCHARGER

TABLE OF CONTENTS

page

EXHAUST SYSTEM AND TURBOCHARGER
DESCRIPTION - EXHAUST SYSTEM 2
DIAGNOSIS AND TESTING
EXHAUST SYSTEM DIAGNOSIS 2
DIAGNOSIS AND TESTING - EXHAUST SYSTEM RESTRICTION CHECK 3
INSPECTION 3
ADJUSTMENTS
EXHAUST SYSTEM ALIGNMENT 3
SPECIFICATIONS
EXHAUST SYSTEM CLEARANCE 4
TORQUE - EXHAUST SYSTEM COMPONENTS 5
TORQUE - TURBOCHARGER COMPONENTS 5
SPECIAL TOOLS
EXHAUST SYSTEM 5
MUFFLER
REMOVAL 6
INSTALLATION 6
INTERMEDIATE PIPE
REMOVAL 7
INSTALLATION 8
CATALYTIC CONVERTER
DESCRIPTION 9
OPERATION 9
REMOVAL 9
INSPECTION 10
INSTALLATION 10
SUPPORT BRACKETS AND ISOLATORS
REMOVAL 11
INSTALLATION 11
HEAT SHIELDS
DESCRIPTION 12
REMOVAL 12
INSTALLATION 12
TURBOCHARGER SYSTEM
DIAGNOSIS AND TESTING - TURBOCHARGER 13
TURBOCHARGER
DESCRIPTION 14
OPERATION 14
REMOVAL - TURBOCHARGER 15
INSTALLATION - TURBOCHARGER 18
CHARGE AIR COOLER AND HOSES
REMOVAL
REMOVAL - CHARGE AIR COOLER HOSES 19
REMOVAL - CHARGE AIR COOLER 20
INSTALLATION
INSTALLATION - CHARGE AIR COOLER HOSES 21
INSTALLATION - CHARGE AIR COOLER 21
LINES AND HOSES
REMOVAL - LINES AND HOSES 22
INSTALLATION - LINES AND HOSES 24
SOLENOIDS AND VACUUM HARNESS
DESCRIPTION 25
REMOVAL 25
INSTALLATION 26

EXHAUST SYSTEM AND TURBOCHARGER

DESCRIPTION - EXHAUST SYSTEM

The exhaust system components consist of a catalytic converter, intermediate pipe, muffler, clamps and support isolators (Fig. 1).

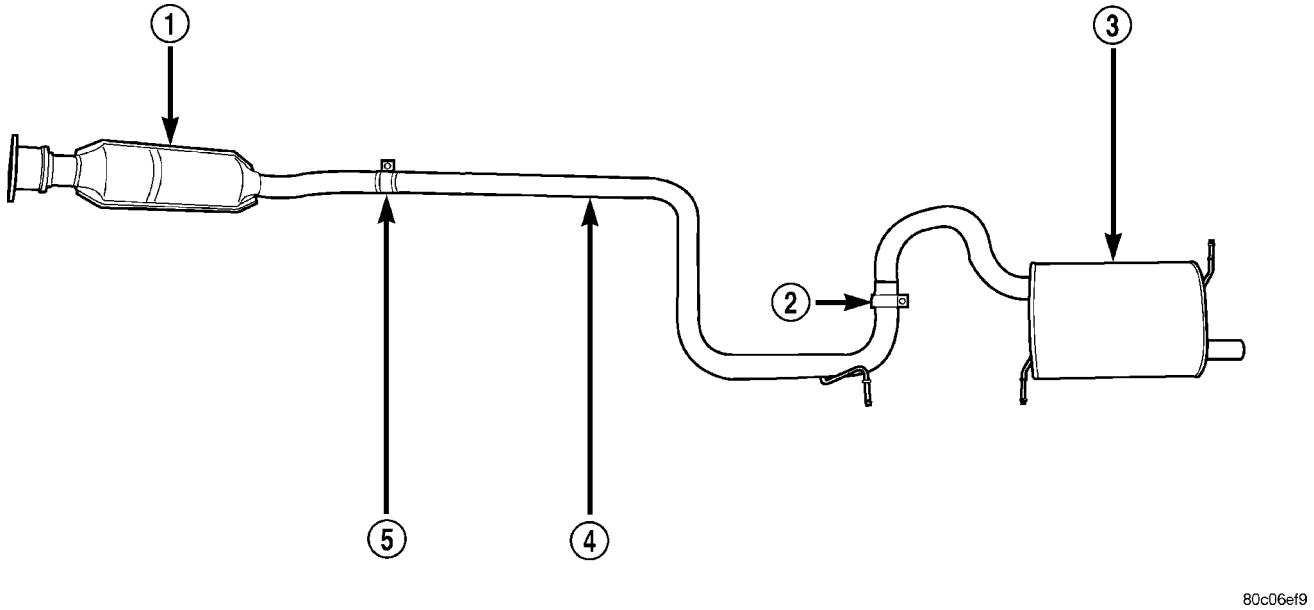

Fig. 1 Exhaust System

1 - CATALYTIC CONVERTER
2 - BAND CLAMP
3 - MUFFLER
4 - INTERMEDIATE PIPE
5 - BAND CLAMP

DIAGNOSIS AND TESTING

EXHAUST SYSTEM DIAGNOSIS

CONDITION	POSSIBLE CAUSES	CORRECTION
EXCESSIVE EXHAUST NOISE (UNDER HOOD)	1. Exhaust manifold cracked or broken.	1. Replace manifold.
	2. Manifold to cylinder head leak.	2. Tighten manifold and/or replace gasket.
	3. Exhaust flex joint to manifold leak.	3.Tighten fasteners or replace gasket.
	4. Exhaust flex joint.	4. Replace catalytic converter assembly.
	5. Pipe and shell noise from front exhaust pipe.	5. Characteristic of single wall pipes.

EXHAUST SYSTEM AND TURBOCHARGER (Continued)

CONDITION	POSSIBLE CAUSES	CORRECTION
EXCESSIVE EXHAUST NOISE	1. Leaks at pipe joints.	1. Tighten or replace clamps at leaking joints.
	2. Burned, blown, or rusted out exhaust pipe or muffler.	2. Replace muffler or exhaust pipes.
	3. Restriction in muffler or tailpipe.	3. Remove restriction, if possible or replace as necessary.
	4. Catalytic converter material in muffler.	4. Replace muffler and converter assembly. Check fuel injection and ignition systems for proper operation.

DIAGNOSIS AND TESTING - EXHAUST SYSTEM RESTRICTION CHECK

Exhaust system restriction can be checked by measuring back pressure using the DRB III® and PEP module pressure tester.

WARNING: THE NORMAL OPERATING TEMPERATURE OF THE EXHAUST SYSTEM IS VERY HIGH. THEREFORE, NEVER WORK AROUND OR ATTEMPT TO SERVICE ANY PART OF THE EXHAUST SYSTEM UNTIL IT IS COOLED. SPECIAL CARE SHOULD BE TAKEN WHEN WORKING NEAR THE CATALYTIC CONVERTER. THE TEMPERATURE OF THE CONVERTER RISES TO A HIGH LEVEL AFTER A SHORT PERIOD OF ENGINE OPERATION TIME.

NOTE: For Special Tool identification, (Refer to 11 - EXHAUST SYSTEM - SPECIAL TOOLS).

(1) Disconnect and remove the upstream (before catalytic converter) oxygen sensor. (Refer to 14 - FUEL SYSTEM/FUEL INJECTION/O2 SENSOR - REMOVAL)

(2) Install the Exhaust Back Pressure Fitting Adaptor CH8519.

(3) Connect the Low Pressure Sensor (15 psi) CH7063 to the back pressure fitting.

(4) Following the PEP module instruction manual, connect all required cables to the DRB III® and PEP module. Select the available menu options on the DRBIII® display screen for using the digital pressure gauge function.

(5) Apply the park brake and start the engine.

(6) With transmission in Park or Neutral, raise engine speed to 2000 RPM. Monitor the pressure readings on the DRBIII®. Back pressure should not exceed specified limit. Refer to specification in table below EXHAUST BACK PRESSURE LIMITS .

(7) If pressure exceeds maximum limits, inspect exhaust system for restricted component. For further catalytic converter inspection procedures, (Refer to 11 - EXHAUST SYSTEM/CATALYTIC CONVERTER - INSPECTION). Replace component(s) as necessary.

EXHAUST BACK PRESSURE LIMITS

Exhaust Back Pressure Limit (Max)	
Vehicle in Park/Neutral (no load) @2000 RPM	3.45 Kpa (0.5 psi)

INSPECTION

Inspect the exhaust pipes, catalytic converters, muffler, and resonators for cracked joints, broken welds and corrosion damage that would result in a leaking exhaust system. Inspect the clamps, support brackets, and insulators for cracks and corrosion damage.

NOTE: Slip joint band clamps are spot welded to exhaust system. If a band clamp must be replaced, the spot weld must be ground off.

ADJUSTMENTS

EXHAUST SYSTEM ALIGNMENT

A misaligned exhaust system is usually indicated by a vibration, rattling noise, or binding of exhaust system components. These noises are sometimes hard to distinguish from other chassis noises. Inspect exhaust system for broken or loose clamps, heat shields, insulators, and brackets. Replace or tighten as necessary. It is important that exhaust system clearances and alignment be maintained.

Perform the following procedures to align the exhaust system. Refer to (Fig. 2) for exhaust system clearance specifications.

(1) Loosen clamps and support brackets.

(2) Align the exhaust system starting at the front, working rearward.

(3) Tighten all clamps and brackets once alignment and clearances are achieved.

EXHAUST SYSTEM AND TURBOCHARGER (Continued)

SPECIFICATIONS

EXHAUST SYSTEM CLEARANCE

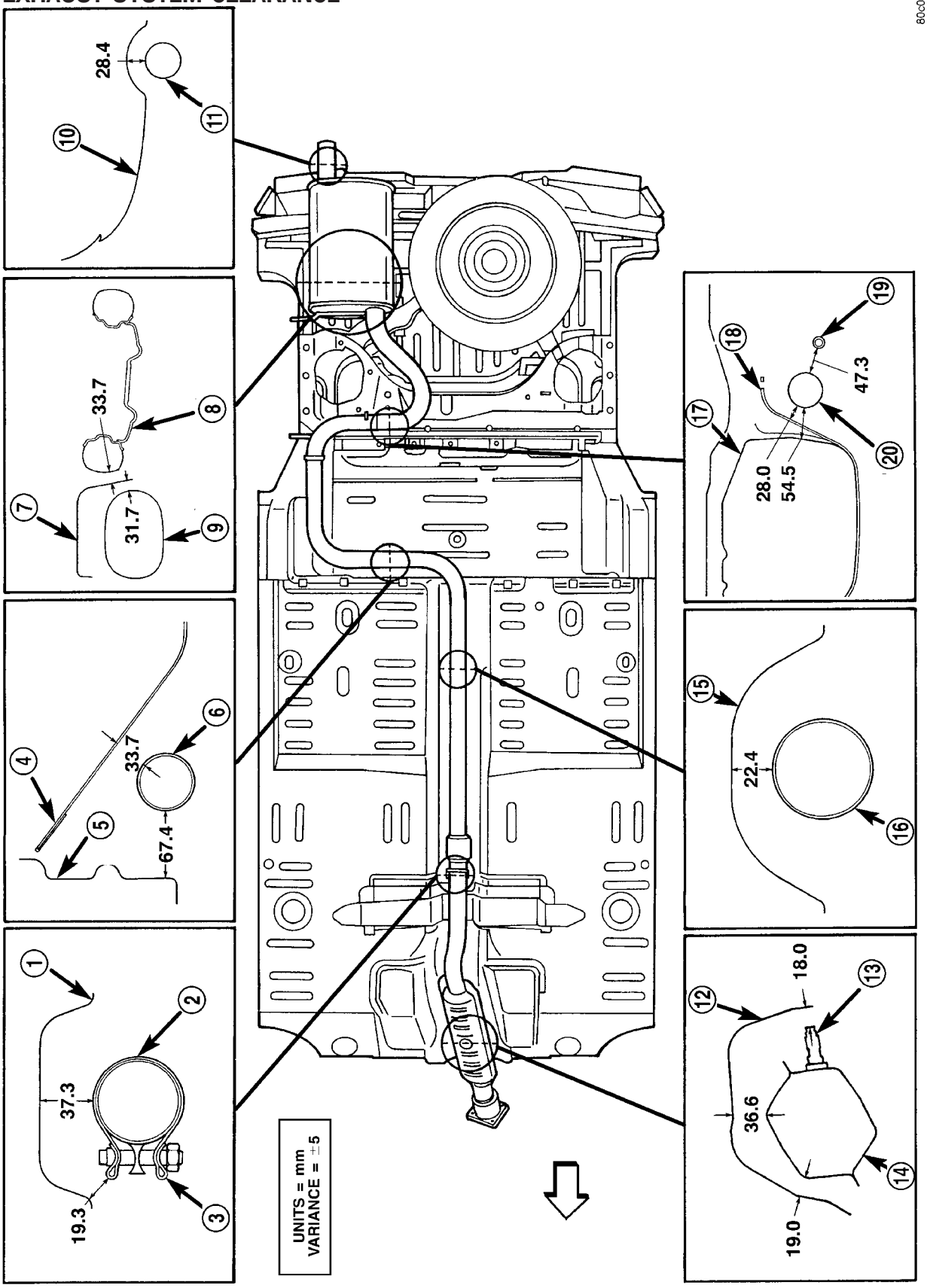

Fig. 2 Exhaust Clearance

EXHAUST SYSTEM AND TURBOCHARGER (Continued)

1 - TUNNEL HEAT SHIELD
2 - INTERMEDIATE PIPE
3 - BAND CLAMP
4 - FUEL TANK STRAP
5 - FLOOR PAN
6 - INTERMEDIATE PIPE
7 - HEAT SHIELD
8 - SPARE TIRE
9 - MUFFLER
10 - REAR FASCIA
11 - TAIL PIPE
12 - HEAT SHIELD
13 - OXYGEN SENSOR
14 - CATALYTIC CONVERTER
15 - TUNNEL HEAT SHIELD
16 - INTERMEDIATE PIPE
17 - FUEL TANK
18 - TANK STRAP
19 - SUSPENSION LINKAGE
20 - INTERMEDIATE PIPE

TORQUE - EXHAUST SYSTEM COMPONENTS

DESCRIPTION	N·m	Ft. Lbs.	In. Lbs.
Band Clamps—Fastener	47	35	—
Catalytic Converter to Exhaust Manifold Flange—Fasteners	28	—	250
Intermediate Pipe Heat Shield—Fasteners	3.7	—	33
Support Brackets (Frame Rail Mounted)—Fasteners	8.5	—	75
Support Bracket (Rear Panel Mounted)—Fasteners	3.7	—	33

TORQUE - TURBOCHARGER COMPONENTS

DESCRIPTION	N·m	Ft. Lbs.	In. Lbs.
Charge Air Cooler—Fasteners	8	—	70
Charge Air Cooler—Hose Clamps	1.7	—	15
Coolant Line—Banjo Fitting	30	22	—
Coolant/Oil Line—Brass Fitting	41	30	—
Coolant/Oil Line—Flared Fitting	31	23	—
Elbow	28	—	250
Elbow Support Bracket			
M8 Fasteners	28	—	250
M10 Fasteners	54	40	—
Exhaust Manifold/Turbocharger Assembly—Fasteners to Cylinder Head	28	—	250
Heat Shield—Fasteners	28	—	250
Oil Return Tube—Fasteners	12	—	105
Turbocharger Support Bracket	54	40	—

SPECIAL TOOLS

EXHAUST SYSTEM

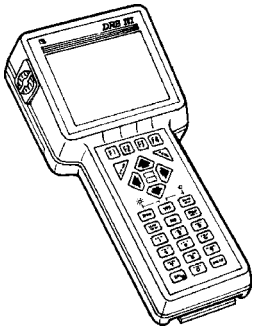

DRB III & PEP Module - OT-CH6010A

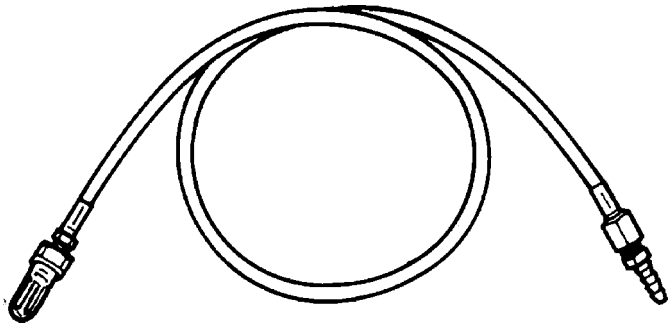

Back Pressure Test Adapter - CH8519

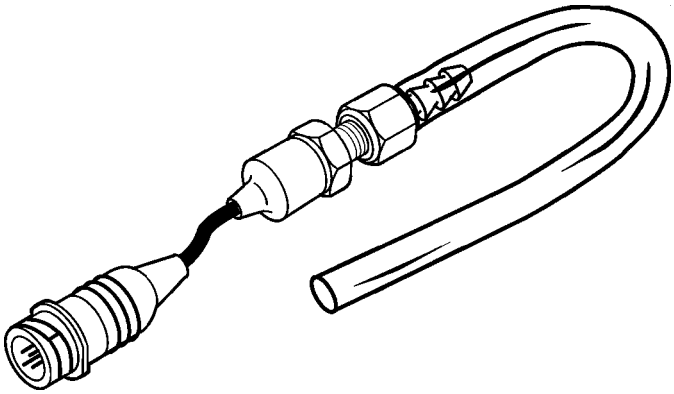

Pressure Transducer CH7063

MUFFLER

REMOVAL

WARNING: THE NORMAL OPERATING TEMPERATURE OF THE EXHAUST SYSTEM IS VERY HIGH. THEREFORE, NEVER WORK AROUND OR ATTEMPT TO SERVICE ANY PART OF THE EXHAUST SYSTEM UNTIL IT IS COOLED. SPECIAL CARE SHOULD BE TAKEN WHEN WORKING NEAR THE CATALYTIC CONVERTER. THE TEMPERATURE OF THE CONVERTER RISES TO A HIGH LEVEL AFTER A SHORT PERIOD OF ENGINE OPERATING TIME.

(1) Raise vehicle on hoist and apply penetrating oil to band clamp fastener of component being removed.

NOTE: Do not use petroleum-based lubricants when removing/installing muffler or exhaust pipe isolators as it may compromise the life of the part. A suitable substitute is a mixture of liquid dish soap and water.

(2) Remove exhaust system ground strap at rear of muffler.

(3) Loosen band clamp and remove support isolators at muffler. Remove muffler from intermediate pipe (Fig. 3).

(4) Clean ends of pipes and muffler to assure mating of all parts. Discard broken or worn isolators, rusted or overused clamps, supports, and attaching parts.

NOTE: When replacement is required on any component of the exhaust system, you must use original equipment parts (or their equivalent).

INSTALLATION

When assembling exhaust system **do not** tighten clamps until components are aligned and clearances are checked.

(1) Install the muffler to intermediate pipe and the isolator supports to the underbody.

(2) Working from the front of system; align each component to maintain position and proper clearance with underbody parts (Fig. 2). For clearance specifications (Refer to 11 - EXHAUST SYSTEM - SPECIFICATIONS). Tighten band clamp to 47 N·m (35 ft. lbs.) (Fig. 4).

CAUTION: Band clamps should never be tightened such that the two sides of the clamps are bottomed out against the center hourglass shaped center block. Once this occurs, the clamp band has been stretched and has lost its clamping force and must be replaced.
To replace the band clamp; remove the nut and peel back the ends of the clamp until spot weld breaks.

NOTE: Maintain proper clamp orientation when replacing with new clamp.

(3) Connect the exhaust system ground strap.

MUFFLER (Continued)

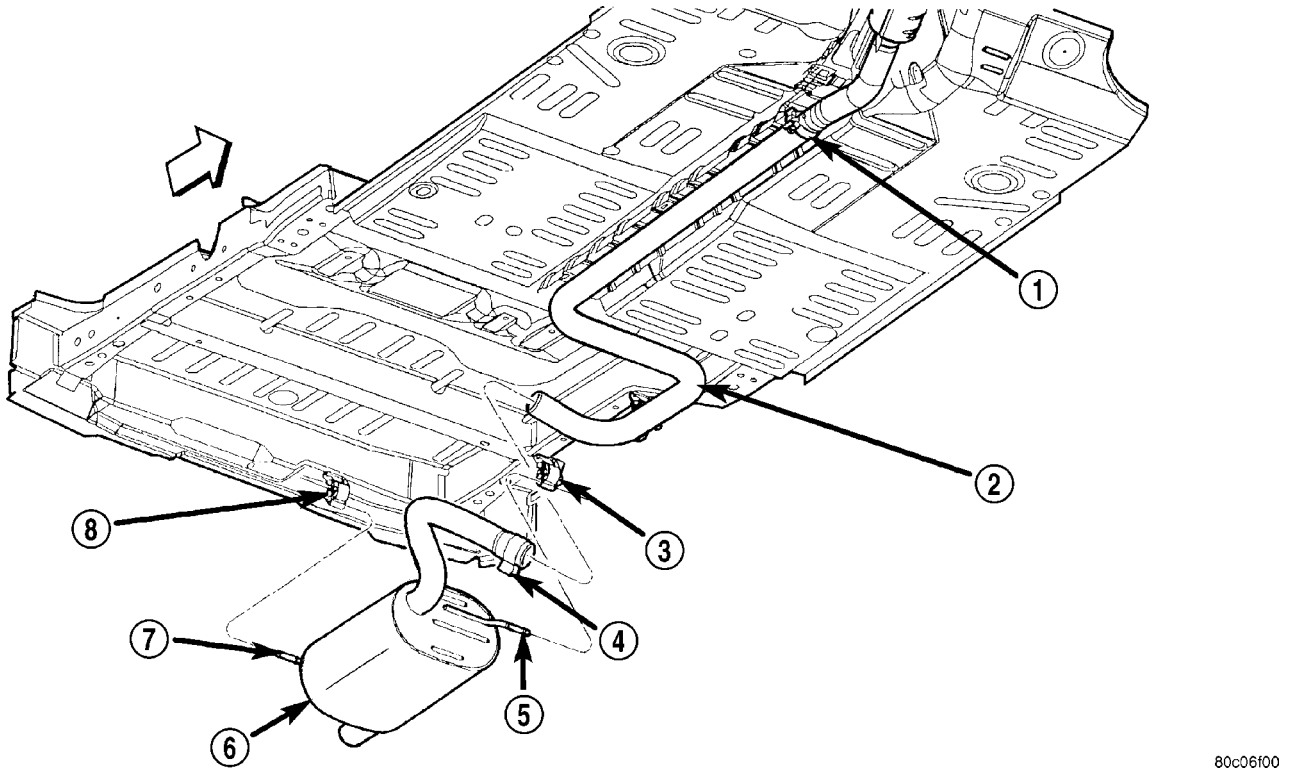

Fig. 3 Muffler

1 - CLAMP
2 - INTERMEDIATE PIPE
3 - ISOLATOR
4 - CLAMP
5 - HANGER
6 - MUFFLER
7 - HANGER
8 - ISOLATOR

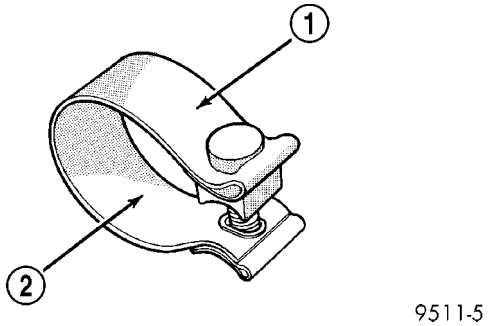

Fig. 4 Band Clamp

1 - CLAMP SIZE
2 - TORQUE SPECIFICATION

INTERMEDIATE PIPE

REMOVAL

WARNING: THE NORMAL OPERATING TEMPERATURE OF THE EXHAUST SYSTEM IS VERY HIGH. THEREFORE, NEVER WORK AROUND OR ATTEMPT TO SERVICE ANY PART OF THE EXHAUST SYSTEM UNTIL IT IS COOLED. SPECIAL CARE SHOULD BE TAKEN WHEN WORKING NEAR THE CATALYTIC CONVERTER. THE TEMPERATURE OF THE CONVERTER RISES TO A HIGH LEVEL AFTER A SHORT PERIOD OF ENGINE OPERATING TIME.

(1) Raise vehicle on hoist and apply penetrating oil to band clamp fastener of component being removed.

NOTE: Do not use petroleum-based lubricants when removing/installing muffler or exhaust pipe isolators as it may compromise the life of the part. A suitable substitute is a mixture of liquid dish soap and water.

(2) Remove muffler (Refer to 11 - EXHAUST SYSTEM/MUFFLER - REMOVAL).

INTERMEDIATE PIPE (Continued)

(3) Loosen band clamp and remove support isolator. Remove intermediate pipe from catalytic converter pipe (Fig. 5).

(4) Clean ends of pipes and muffler to assure mating of all parts. Discard broken or worn isolators, rusted or overused clamps, supports, and attaching parts.

NOTE: When replacement is required on any component of the exhaust system, you must use original equipment parts (or their equivalent).

INSTALLATION

When assembling exhaust system **do not** tighten clamps until components are aligned and clearances are checked.

(1) Install intermediate pipe and the isolator supports to the underbody (Fig. 5).

(2) Install muffler (Refer to 11 - EXHAUST SYSTEM/MUFFLER - INSTALLATION).

(3) Working from the front of system; align each component to maintain position and proper clearance with underbody parts (Fig. 2). For clearance specifications (Refer to 11 - EXHAUST SYSTEM - SPECIFICATIONS).

(4) Tighten band clamps to 47 N·m (35 ft. lbs.) (Fig. 6).

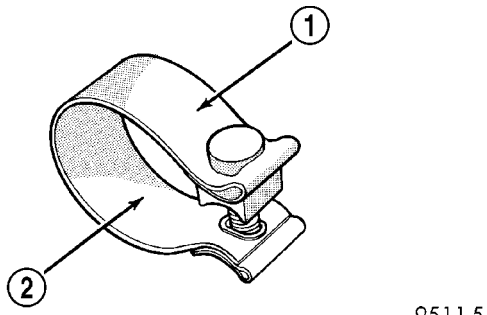

Fig. 6 Band Clamp

1 - CLAMP SIZE
2 - TORQUE SPECIFICATION

CAUTION: Band clamps should never be tightened such that the two sides of the clamps are bottomed out against the center hourglass shaped center block. Once this occurs, the clamp band has been stretched and has lost its clamping force and must be replaced.
To replace the band clamp; remove the nut and peel back the ends of the clamp until spot weld breaks.

NOTE: Maintain proper clamp orientation when replacing with new clamp.

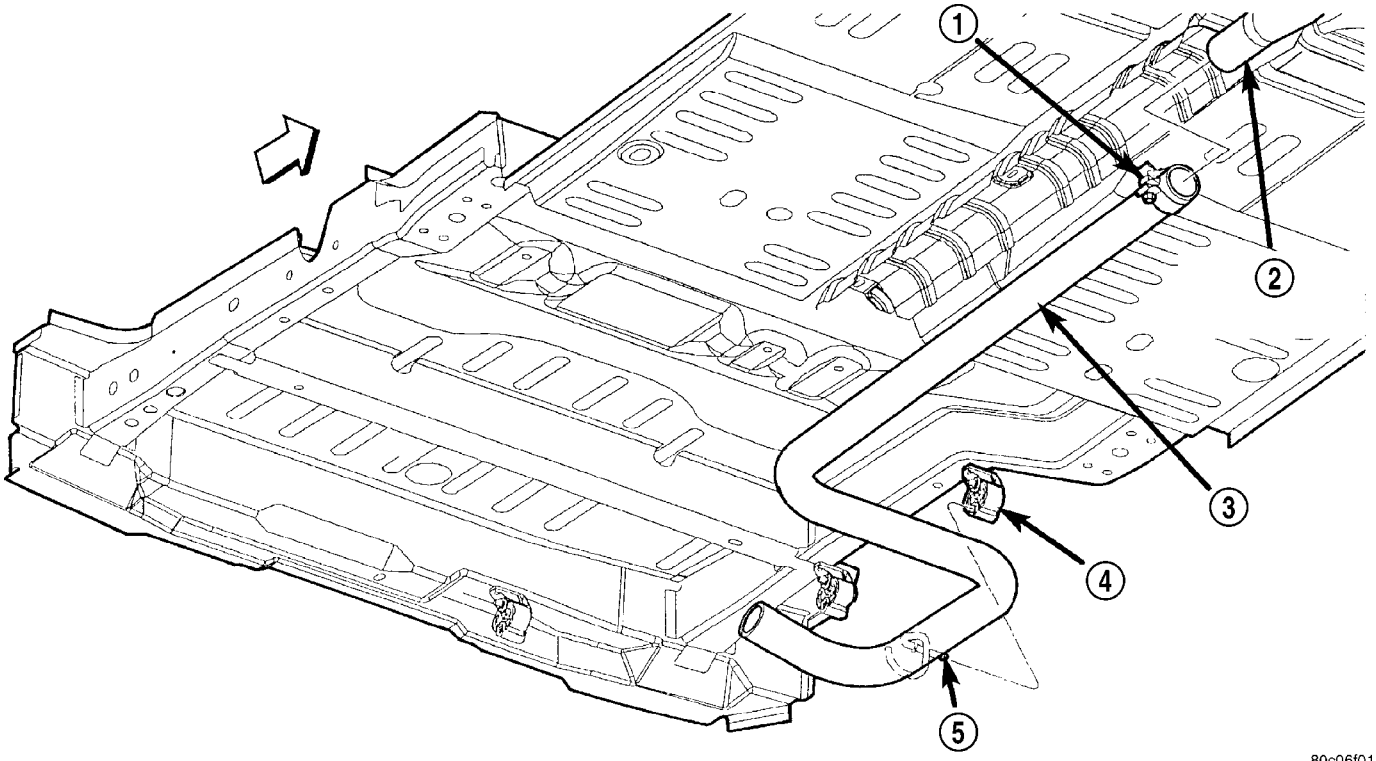

Fig. 5 Intermediate Pipe

1 - CLAMP
2 - CATALYTIC CONVERTER PIPE
3 - INTERMEDIATE PIPE
4 - ISOLATOR
5 - HANGER

CATALYTIC CONVERTER

DESCRIPTION

An under-floor catalytic converter inlet is attached to the exhaust manifold using fasteners and a gasket for sealing (Fig. 7). A flex joint that is integral to the converter allows movement between the engine and the exhaust system. The converter outlet attaches to the intermediate pipe.

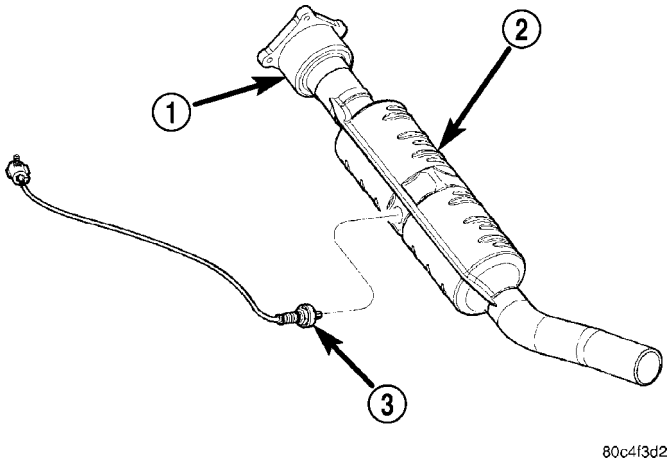

Fig. 7 Catalytic Converter - Typical

1 - FLEX JOINT
2 - CATALYTIC CONVERTER
3 - OXYGEN SENSOR

OPERATION

The three-way catalytic converter simultaneously converts three exhaust emissions into harmless gases. Specifically, HC and CO emissions are converted into water (H2O) and carbon dioxide (CO2). Oxides of Nitrogen (NOx) are converted into elemental Nitrogen (N) and water. The three-way catalyst is most efficient in converting HC, CO and NOx at the stoichiometric air fuel ratio of 14.7:1.

The oxygen content in a catalyst is important for efficient conversion of exhaust gases. When a high oxygen content (lean) air/fuel ratio is present for an extended period, oxygen content in a catalyst can reach a maximum. When a rich air/fuel ratio is present for an extended period, the oxygen content in the catalyst can become totally depleted. When this occurs, the catalyst fails to convert the gases. This is known as catalyst ″punch through.″

Catalyst operation is dependent on its ability to store and release the oxygen needed to complete the emissions-reducing chemical reactions. As a catalyst deteriorates, its ability to store oxygen is reduced. Since the catalyst's ability to store oxygen is somewhat related to proper operation, oxygen storage can be used as an indicator of catalyst performance. Refer to the appropriate Diagnostic Information for diagnosis of a catalyst related Diagnostic Trouble Code (DTC).

The combustion reaction caused by the catalyst releases additional heat in the exhaust system, causing temperature increases in the area of the reactor under severe operating conditions. Such conditions can exist when the engine misfires or otherwise does not operate at peak efficiency. **Do not** remove spark plug wires from plugs or by any other means short out cylinders, if exhaust system is equipped with a catalytic converter. Failure of the catalytic converter can occur due to temperature increases caused by unburned fuel passing through the converter. This deterioration of the catalyst core can result in excessively high emission levels, noise complaints, and exhaust restrictions.

Unleaded gasoline must be used to avoid ruining the catalyst core. Do not allow engine to operate above 1200 RPM in neutral for extended periods over 5 minutes. This condition may result in excessive exhaust system/floor pan temperatures because of no air movement under the vehicle.

The flex joint allows flexing as the engine moves, preventing breakage that could occur from the back-and-forth motion of a transverse mounted engine.

CAUTION: Due to exterior physical similarities of some catalytic converters with pipe assemblies, extreme care should be taken with replacement parts. There are internal converter differences required in some parts of the country (particularly vehicles built for States with strict emission requirements) and between model years.

REMOVAL

WARNING: THE NORMAL OPERATING TEMPERATURE OF THE EXHAUST SYSTEM IS VERY HIGH. THEREFORE, NEVER ATTEMPT TO SERVICE ANY PART OF THE EXHAUST SYSTEM UNTIL IT IS COOLED. SPECIAL CARE SHOULD BE TAKEN WHEN WORKING NEAR THE CATALYTIC CONVERTER. THE TEMPERATURE OF THE CONVERTER RISES TO A HIGH LEVEL AFTER A SHORT PERIOD OF ENGINE OPERATION TIME.

NOTE: Before replacing a catalytic converter, determine the root cause of failure. Most catalytic converter failures are caused by air, fuel or ignition problems. Refer to the appropriate service diagnostic information for repair procedures.

(1) Remove muffler and intermediate pipe (Refer to 11 - EXHAUST SYSTEM/MUFFLER - REMOVAL)

CATALYTIC CONVERTER (Continued)

and (Refer to 11 - EXHAUST SYSTEM/INTERMEDIATE PIPE - REMOVAL).

(2) Disconnect downstream oxygen sensor electrical connector (Fig. 8).

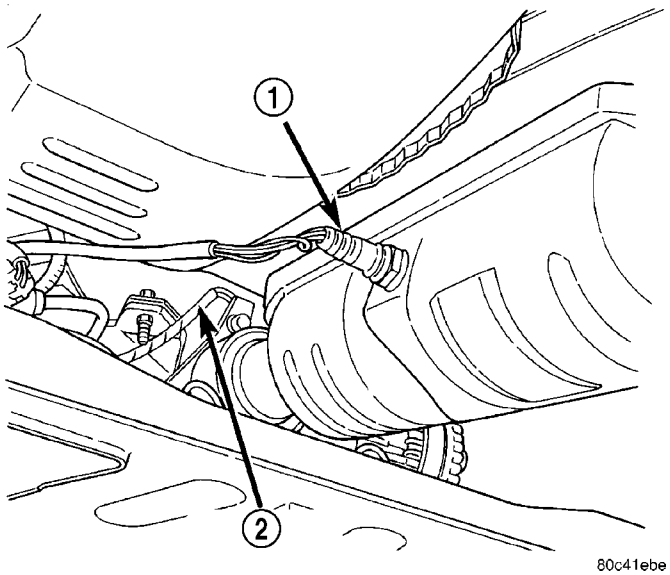

Fig. 8 Downstream 1/2 Oxygen Sensor - Typical

1 - DOWN STREAM O2 SENSOR
2 - UP STREAM O2 SENSOR

(3) Remove catalytic converter to exhaust manifold attaching fasteners and remove converter from vehicle (Fig. 9), (Fig. 10), (Fig. 11) or (Fig. 12).

(4) Remove and discard flange gasket.

NOTE: When replacement is required on any component of the exhaust system, original equipment parts (or equivalent) must be used.

INSPECTION

WARNING: THE NORMAL OPERATING TEMPERATURE OF THE EXHAUST SYSTEM IS VERY HIGH. THEREFORE, NEVER ATTEMPT TO SERVICE ANY PART OF THE EXHAUST SYSTEM UNTIL IT IS COOLED. SPECIAL CARE SHOULD BE TAKEN WHEN WORKING NEAR THE CATALYTIC CONVERTER. THE TEMPERATURE OF THE CONVERTER RISES TO A HIGH LEVEL AFTER A SHORT PERIOD OF ENGINE OPERATION TIME.

Check catalytic converter for a flow restriction. (Refer to 11 - EXHAUST SYSTEM - DIAGNOSIS AND TESTING) Exhaust System Restriction Check for procedure.

Visually inspect the catalytic converter element by using a borescope or equivalent. Remove oxygen sensor(s) and insert borescope. If borescope is not available, remove converter and inspect element using a flashlight. Inspect element for cracked or melted substrate.

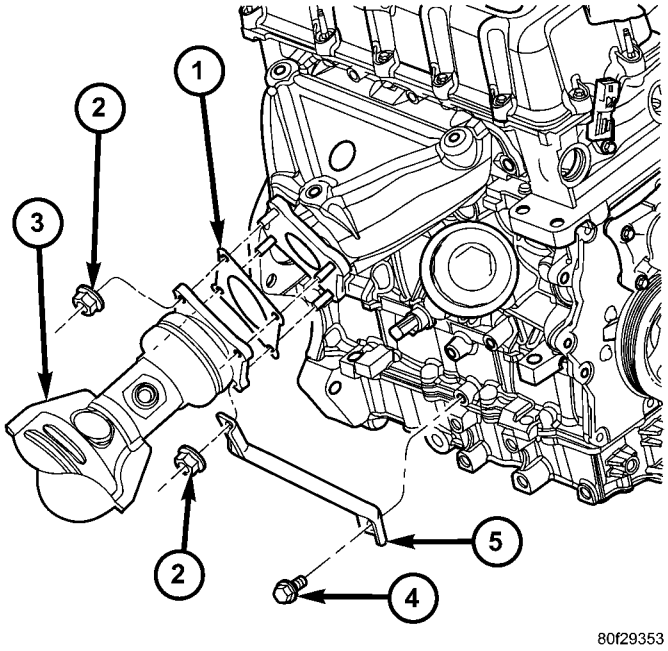

Fig. 9 Converter to Exhaust Manifold Connection - 1.6L

1 - GASKET
2 - NUT
3 - CATALYTIC CONVERTER
4 - BOLT
5 - SUPPORT BRACKET

NOTE: Before replacing a catalytic converter, determine the root cause of failure. Most catalytic converter failures are caused by air, fuel or ignition problems. (Refer to Appropriate Diagnostic Information) for test procedures.

INSTALLATION

NOTE: When assembling exhaust system do not tighten clamps until all components are aligned and clearances are checked.

(1) Assemble catalytic converter to exhaust manifold connection. Use a new flange gasket.

(2) Tighten the catalytic converter to exhaust manifold fasteners to 28 N·m (250 in. lbs.) (Fig. 9), (Fig. 10), (Fig. 11) or (Fig. 12).

(3) Install intermediate pipe and muffler (Refer to 11 - EXHAUST SYSTEM/INTERMEDIATE PIPE - INSTALLATION) and (Refer to 11 - EXHAUST SYSTEM/MUFFLER - INSTALLATION).

(4) Working from the front of system; align each component to maintain position and proper clearance with underbody parts (Fig. 2). For clearance specifi-

CATALYTIC CONVERTER (Continued)

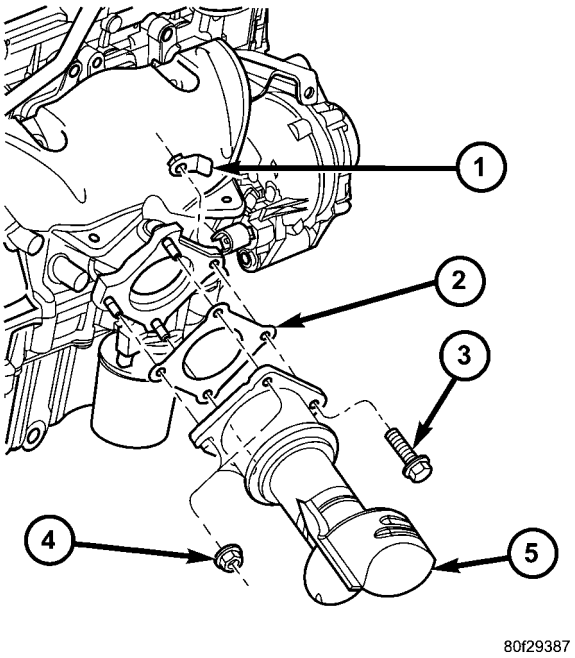

Fig. 10 Converter to Exhaust Manifold Connection - 2.0L

1 - FLAG NUT
2 - GASKET
3 - BOLT
4 - NUT
5 - CATALYTIC CONVERTER

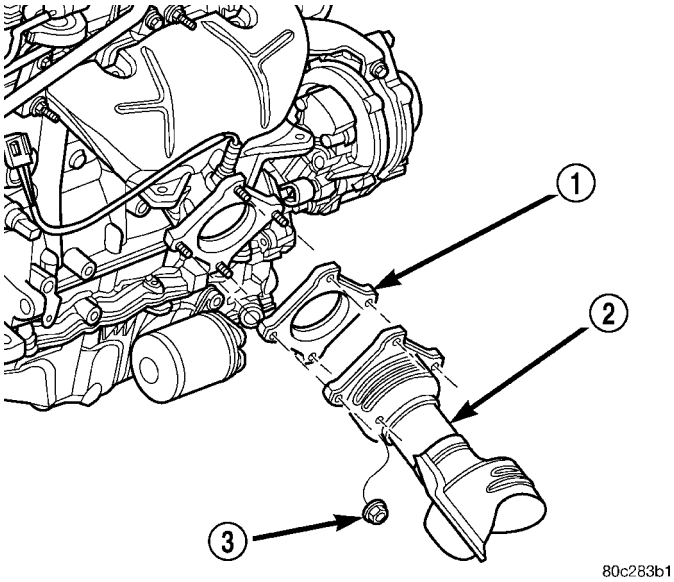

Fig. 11 Converter to Exhaust Manifold Connection - 2.4L

1 - GASKET
2 - CATALYTIC CONVERTER
3 - NUT

cations (Refer to 11 - EXHAUST SYSTEM - SPECIFICATIONS).

(5) Tighten band clamps to 47 N·m (35 ft. lbs.).

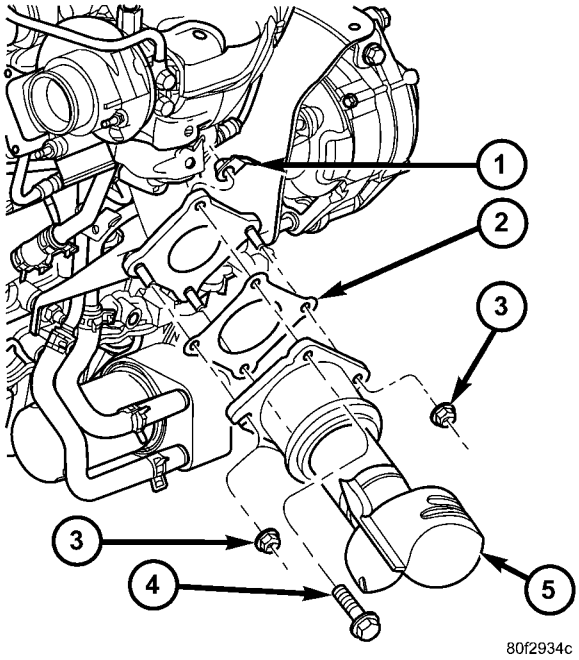

Fig. 12 Converter to Exhaust Manifold Connection - 2.4L Turbo

1 - FLAG NUT
2 - GASKET
3 - NUT
4 - BOLT
5 - CATALYTIC CONVERTER

CAUTION: Band clamps should never be tightened such that the two sides of the clamps are bottomed out against the center hourglass shaped center block. Once this occurs, the clamp has lost clamping force and must be replaced.

(6) If removed, install downstream oxygen sensor (Fig. 8).

(7) Connect downstream oxygen sensor electrical connector.

SUPPORT BRACKETS AND ISOLATORS

REMOVAL

(1) Disconnect isolator from exhaust system component.

(2) Remove screws attaching isolator bracket to underbody (Fig. 13) .

(3) Remove isolator assembly (Fig. 13) .

INSTALLATION

(1) Position isolator bracket to underbody and install attaching screws (Fig. 13) . Tighten bracket screws to frame rail to 8.5 N·m (75 in. lbs.) and bracket screws to the rear panel to 3.7 N·m (33 in. lbs.).

SUPPORT BRACKETS AND ISOLATORS (Continued)

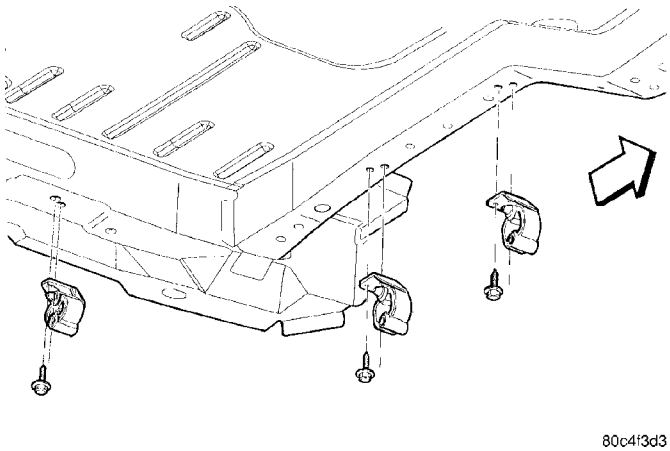

Fig. 13 Exhaust System Isolator and Bracket

(2) Connect isolator to exhaust system component.

HEAT SHIELDS

DESCRIPTION

Heat shields (Fig. 14), (Fig. 15), (Fig. 16), and (Fig. 17) are needed to protect both the vehicle and the environment from the high temperatures developed in the vicinity of the catalytic converter.

CAUTION: Avoid application of rust prevention compounds or undercoating materials to exhaust system floor pan heat shield on cars if equipped. Light over-spray near the edges is permitted. Application of coating will greatly reduce the efficiency of the heat shields resulting in excessive floor pan temperatures and objectionable fumes.

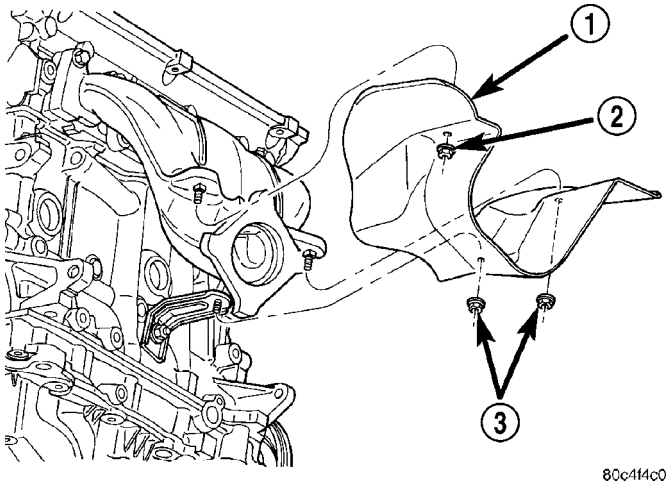

Fig. 14 Heat Shield - Engine Wiring

1 - HEAT SHIELD
2 - NUT
3 - NUT

REMOVAL

(1) Raise vehicle on hoist.

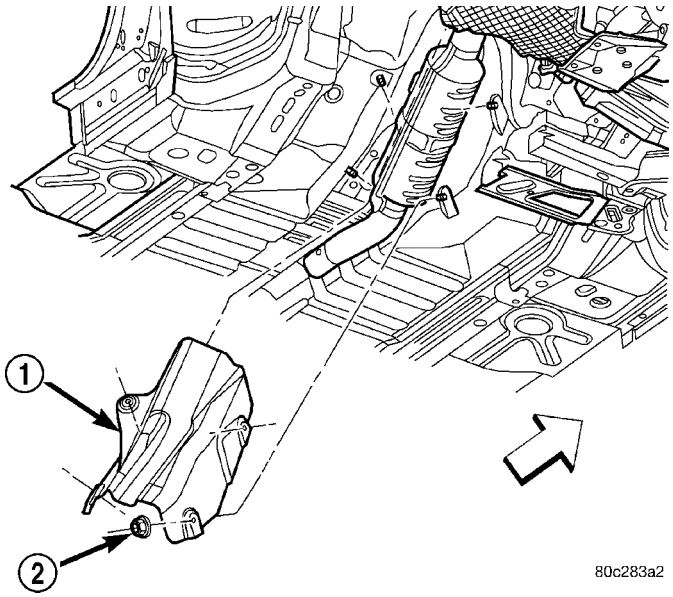

Fig. 15 Heat Shield - Catalytic Converter

1 - HEAT SHIELD
2 - NUT

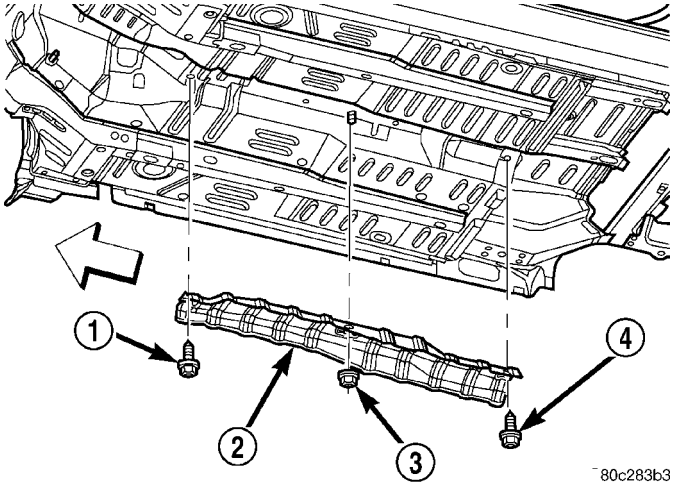

Fig. 16 Heat Shield - Intermediate Pipe

1 - SCREW
2 - HEAT SHIELD
3 - NUT
4 - SCREW

(2) Remove fasteners attaching heat shield (Fig. 14), (Fig. 15), (Fig. 16), or (Fig. 17).

(3) Remove heat shield(s).

INSTALLATION

(1) Position heat shield(s) to underbody.

(2) Install heat shield fasteners (Fig. 14), (Fig. 15), (Fig. 16), or (Fig. 17).

(3) Inspect heat shield to exhaust system clearances and adjust as necessary (Fig. 2). For clearance specifications (Refer to 11 - EXHAUST SYSTEM - SPECIFICATIONS).

(4) Lower vehicle.

HEAT SHIELDS (Continued)

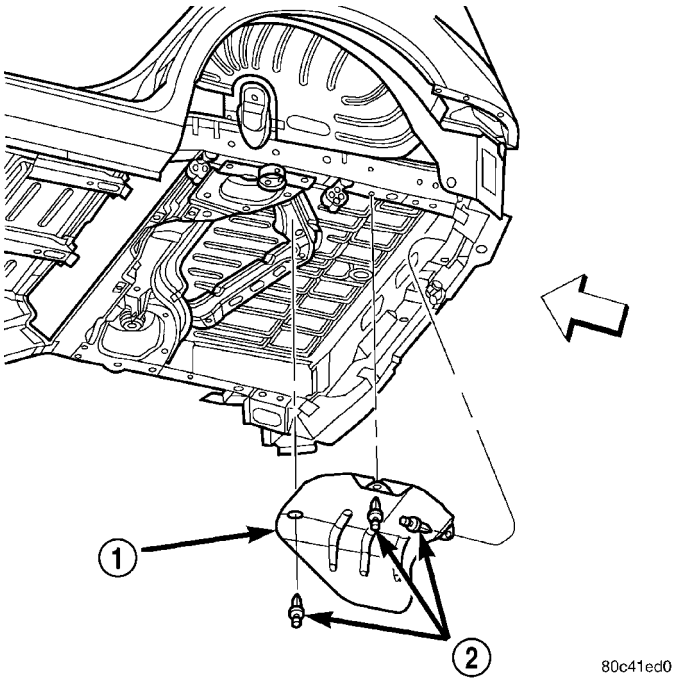

Fig. 17 Heat Shield - Muffler

1 - HEAT SHIELD
2 - FASTENER

TURBOCHARGER SYSTEM

DIAGNOSIS AND TESTING - TURBOCHARGER

Check for Diagnostic Trouble Codes (DTC'S) stored in PCM memory. If any DTC'S are present, refer to the appropriate Powertrain Diagnostic Information.

CONDITION	POSSIBLE CAUSES
Low boost pressure, lack of power	Clogged air filter Leaks between engine and turbocharger Exhaust restriction Restriction in charge air cooler hose(s) Wastegate stuck open Wastegate actuator malfunction Seized turbocharger shaft
Overboost	Wastegate stuck shut Wastegate actuator malfunction
Noisy operation or vibration	Leak(s) in charge air cooler hose(s) Intake or exhaust leaks Oil starvation Worn turbocharger bearings Damaged turbine/compressor fins

TURBOCHARGER SYSTEM (Continued)

CONDITION	POSSIBLE CAUSES
Blue smoke from exhaust	Oil return line blocked Engine breather clogged Turbocharger shaft seals damaged

TURBOCHARGER

DESCRIPTION

CAUTION: The turbocharger is a performance part and must not be tampered with. Tampering with the wastegate components can reduce durability by increasing cylinder pressure and thermal loading due to incorrect inlet and exhaust manifold pressure. Poor fuel economy and failure to meet regulatory emissions laws may result. Increasing the turbocharger boost WILL NOT increase engine power.

The turbocharger is an exhaust-driven supercharger which increases the pressure and density of the air entering the engine. With the increase of air entering the engine, more fuel can be injected into the cylinders, which creates more power during combustion.

The turbocharger assembly consists of four (4) major component systems (Fig. 18):

- Turbine section
- Compressor section
- Bearing housing
- Wastegate

OPERATION

Exhaust gas pressure and energy drive the turbine, which in turn drives a centrifugal compressor that compresses the inlet air, and forces the air into the engine through the charge air cooler and plumbing. Since heat is a by-product of this compression, the air must pass through a charge air cooler to cool the incoming air and maintain power and efficiency.

Increasing air flow to the engine provides:

- Improved engine performance
- Improved operating economy
- Altitude compensation

The turbocharger also uses a wastegate (Fig. 19), which regulates intake manifold air pressure and prevents over boosting at high engine speeds. When the wastegate valve is closed, all of the exhaust gases flow through the turbine wheel. As the intake manifold pressure increases, the wastegate actuator opens the valve, diverting some of the exhaust gases away from the turbine wheel. This limits turbine shaft speed and air output from the impeller.

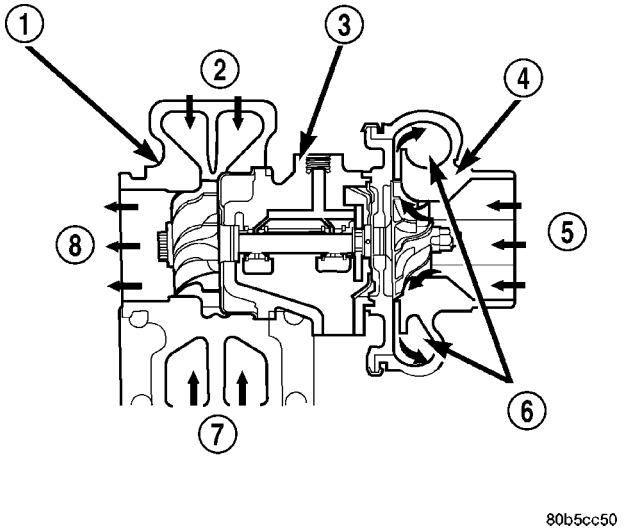

Fig. 18 Turbocharger - Typical

1 - TURBINE SECTION
2 - EXHAUST GAS
3 - BEARING HOUSING
4 - COMPRESSOR SECTION
5 - INLET AIR
6 - COMPRESSED AIR TO ENGINE
7 - EXHAUST GAS
8 - EXHAUST GAS TO EXHAUST PIPE

The turbocharger is cooled by engine coolant. The coolant is delivered to the turbocharger by a supply line that connects from engine block to the turbocharger. A coolant return line connects the turbocharger to heater tubes.

The turbocharger is lubricated by engine oil that is pressurized, cooled, and filtered. The oil is delivered to the turbocharger by a supply line that is tapped into the cylinder block. The oil travels into the bearing housing, where it lubricates the shaft and bearings (Fig. 20). A return pipe at the bottom of the bearing housing, routes the engine oil back to the crankcase.

The most common turbocharger failure is bearing failure related to repeated hot shutdowns with inadequate “cool-down” periods. A sudden engine shut down after prolonged operation will result in the transfer of heat from the turbine section of the turbocharger to the bearing housing. This causes the oil to overheat and break down, which causes bearing and shaft damage the next time the vehicle is started.

Letting the engine idle after extended operation allows the turbine housing to cool to normal operat-

TURBOCHARGER (Continued)

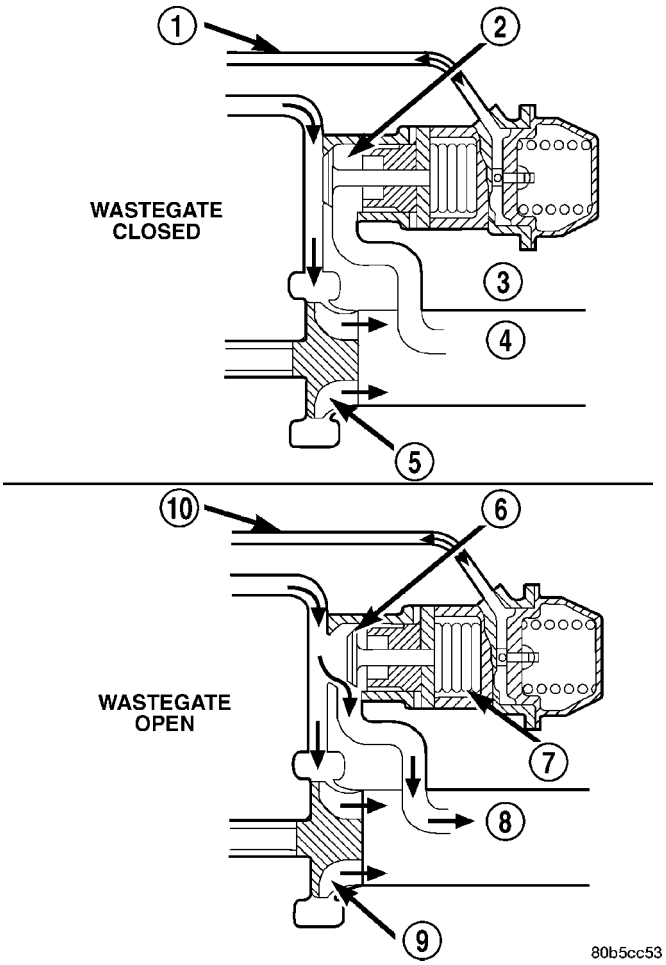

Fig. 19 Wastegate Operation

1 - SIGNAL LINE
2 - EXHAUST BYPASS VALVE
3 - WASTEGATE
4 - EXHAUST
5 - TURBINE
6 - EXHAUST BYPASS VALVE
7 - WASTEGATE
8 - EXHAUST
9 - TURBINE
10 - SIGNAL LINE

ing temperature. The following chart should be used as a guide in determining the amount of engine idle time required to sufficiently cool down the turbocharger before shut down, depending upon the type of driving and the amount of cargo.

TURBOCHARGER ″COOL DOWN″ CHART	
Driving Conditions	Idle Time (in minutes) Before Shut Down
Normal Driving	Not required
Aggressive Driving or Heavily Loaded	3
Trailer Tow	5

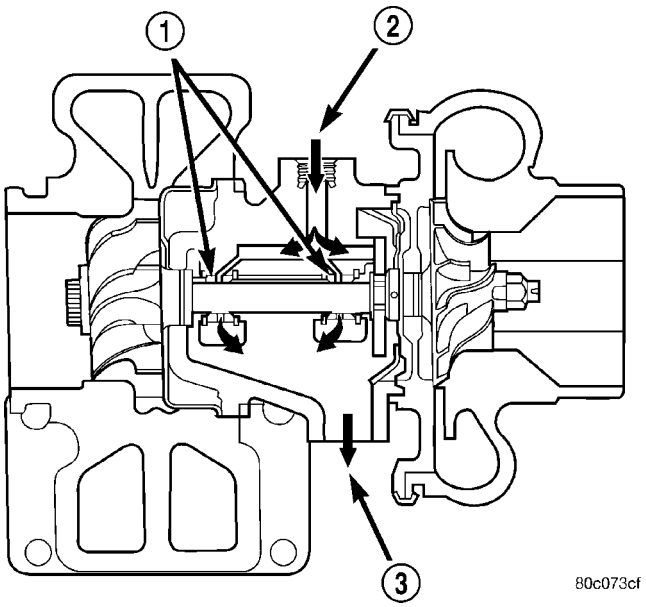

Fig. 20 Turbocharger Oil Supply and Drain

1 - BEARINGS
2 - OIL SUPPLY (FROM ENGINE BLOCK)
3 - OIL RETURN (TO OIL PAN)

REMOVAL - TURBOCHARGER

CAUTION: IF TURBOCHARGER IS REPLACED DUE TO A BEARING FAILURE, REPLACEMENT OF THE OIL PRESSURE FEED LINE IS REQUIRED. OIL RETURN TUBE SHOULD BE CLEANED ALSO.

NOTE: The turbocharger and exhaust manifold are serviced as an assembly. Do Not attempt to remove the turbocharger from the exhaust manifold. Exhaust leaks will result. It is recommended that the turbocharger elbow be replaced along with the turbocharger/exhaust manifold assembly.

(1) Disconnect negative battery cable.

(2) Drain cooling system (Refer to 7 - COOLING/ENGINE - STANDARD PROCEDURE - DRAINING COOLING SYSTEM).

(3) Remove air cleaner housing and lid (Refer to 9 - ENGINE/AIR INTAKE SYSTEM/AIR CLEANER HOUSING - REMOVAL).

(4) Disconnect clean air hose from turbocharger (Fig. 21).

(5) Disconnect throttle and speed control cables at throttle body.

(6) Disconnect electrical connectors from the following components:

- Inlet Air Temperature (IAT) Sensor
- MAP Sensor
- IAC Motor
- Throttle Position Sensor
- Ignition Coil Capacitor

TURBOCHARGER (Continued)

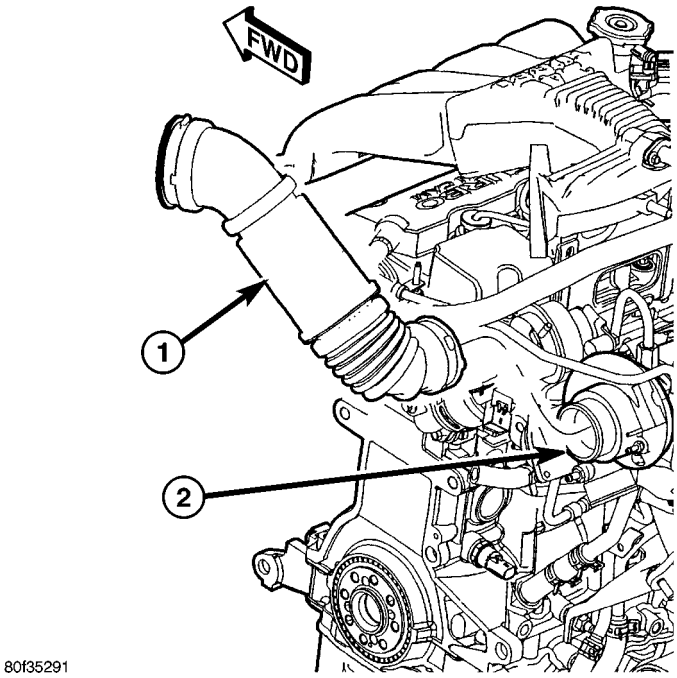

Fig. 21 Clean Air Hose - 2.4L Turbo

1 - CLEAN AIR HOSE
2 - TURBOCHARGER

- Upstream Oxygen Sensor

(7) Disconnect air inlet hose at throttle body (Fig. 22).

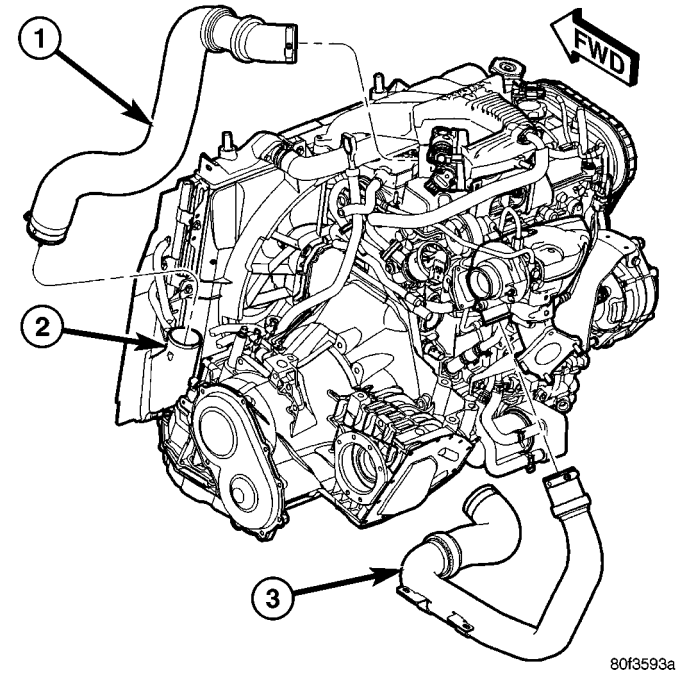

Fig. 22 Charge Air Cooler Hoses

1 - HOSE - CHARGE AIR COOLER TO THROTTLE BODY
2 - CHARGE AIR COOLER
3 - HOSE - TURBOCHARGER TO CHARGE AIR COOLER

(8) Disconnect vacuum hoses at throttle body and upper intake manifold.

(9) Remove upper intake manifold support bracket (Fig. 23).

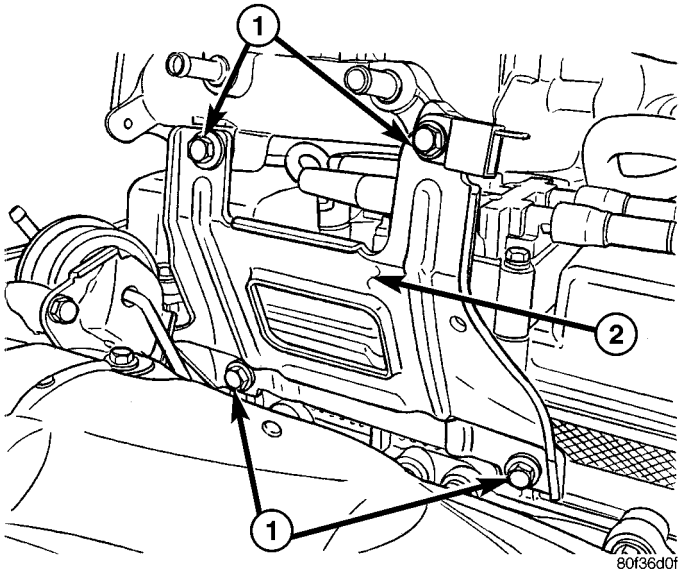

Fig. 23 Support Bracket

1 - FASTENERS
2 - UPPER INTAKE MANIFOLD SUPPORT BRACKET

(10) Remove upper intake manifold (Refer to 9 - ENGINE/MANIFOLDS/INTAKE MANIFOLD - REMOVAL).

CAUTION: Cover lower intake manifold opening with suitable cover to prevent any foreign objects from entering.

(11) Remove turbocharger upper heat shield (Fig. 27).

(12) Disconnect oil supply line at turbocharger (Fig. 24).

(13) Remove coolant return line (Fig. 24).

(14) Disconnect vacuum hoses from turbocharger.

(15) Raise vehicle on hoist.

(16) Disconnect muffler ground strap. Remove muffler (Refer to 11 - EXHAUST SYSTEM/MUFFLER - REMOVAL).

(17) Disconnect downstream oxygen sensor.

(18) Remove fasteners securing catalytic converter to exhaust manifold (Fig. 25).

(19) Remove catalytic converter and intermediate pipe as an assembly.

(20) Remove turbocharger to charge air cooler hose assembly (Fig. 26).

(21) Remove turbocharger elbow support bracket (Fig. 27).

(22) Remove turbocharger support bracket (Fig. 27).

TURBOCHARGER (Continued)

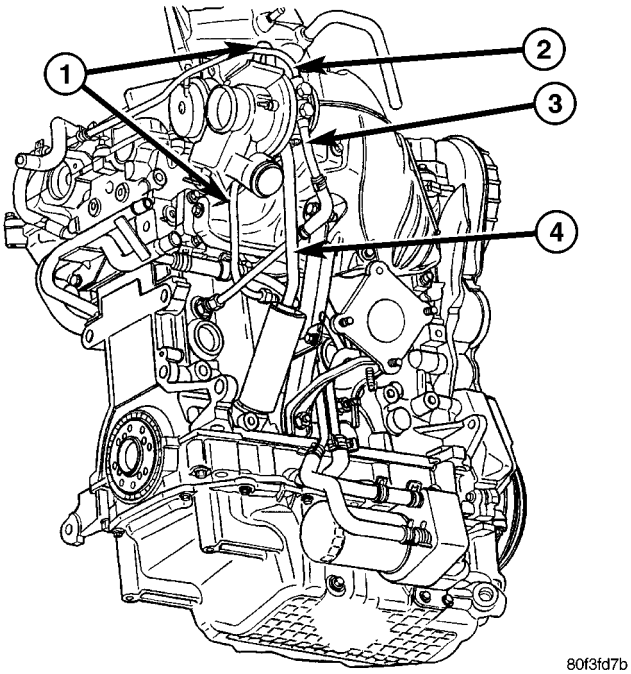

Fig. 24 Turbocharger Lines and Hoses

1 - OIL SUPPLY LINE
2 - COOLANT RETURN LINE
3 - COOLANT SUPPLY LINE
4 - OIL RETURN TUBE

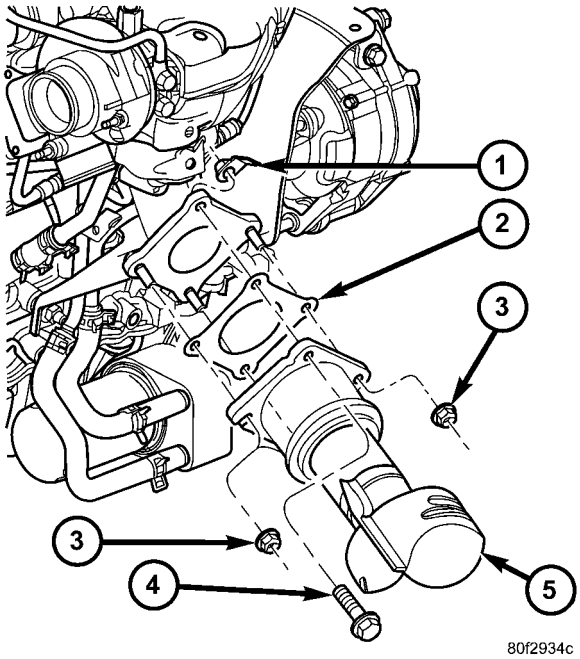

Fig. 25 Converter to Exhaust Manifold Connection - 2.4L Turbo

1 - FLAG NUT
2 - GASKET
3 - NUT
4 - BOLT
5 - CATALYTIC CONVERTER

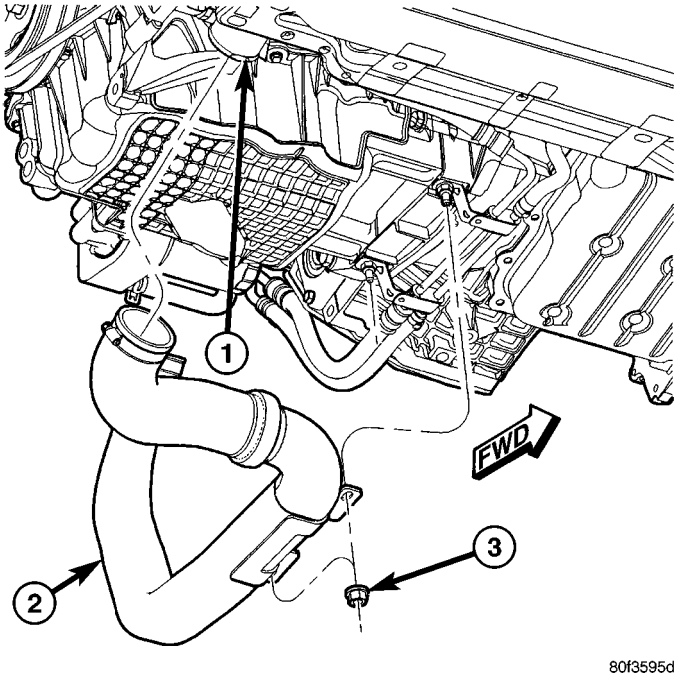

Fig. 26 Charge Air Cooler Hoses

1 - CHARGE AIR COOLER
2 - HOSE - TURBOCHARGER TO CHARGE AIR COOLER
3 - NUT

(23) Remove oil return tube (Fig. 24).

(24) Remove turbocharger coolant supply line (Fig. 24).

(25) Remove turbocharger lower heat shield (Fig. 27).

(26) Remove turbocharger elbow (Fig. 27).

(27) Remove lower exhaust manifold fasteners that are accessible while vehicle is on hoist.

(28) Lower vehicle.

(29) Remove upper exhaust manifold fasteners.

(30) Remove turbocharger/exhaust manifold assembly from above/between the engine and cowl panel.

(31) Remove and discard exhaust manifold gasket.

TURBOCHARGER (Continued)

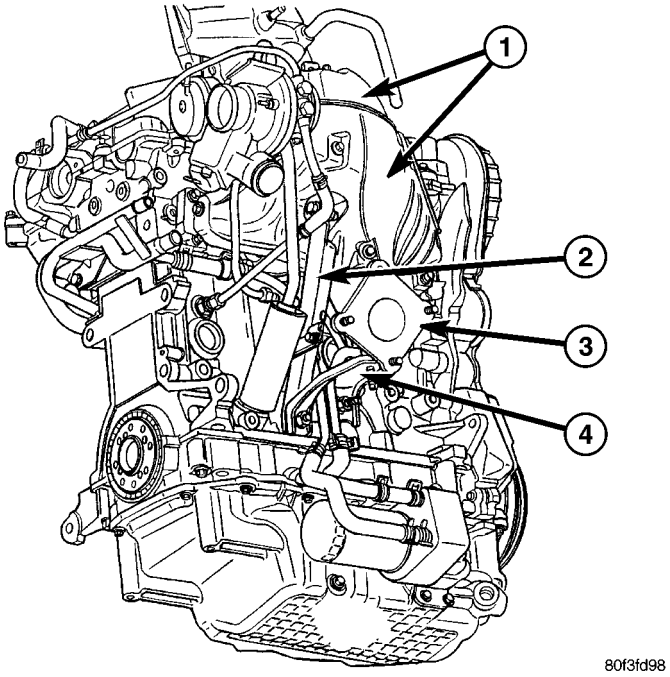

Fig. 27 Turbocharger Brackets and Heat Shields

1 - UPPER/LOWER HEAT SHIELDS
2 - TURBOCHARGER SUPPORT BRACKET
3 - ELBOW
4 - ELBOW SUPPORT BRACKET

INSTALLATION - TURBOCHARGER

CAUTION: IF TURBOCHARGER IS REPLACED DUE TO A BEARING FAILURE, REPLACEMENT OF THE OIL PRESSURE FEED LINE IS REQUIRED. OIL RETURN TUBE SHOULD BE CLEANED ALSO.

NOTE: The turbocharger and exhaust manifold are serviced as an assembly. Do Not attempt to remove the turbocharger from the exhaust manifold. Exhaust leaks will result. It is recommended that the turbocharger elbow be replaced along with the turbocharger/exhaust manifold assembly.

(1) Clean gasket sealing surfaces. Replace exhaust manifold gasket. **DO NOT APPLY SEALER TO GASKET.**

NOTE: Stainless steel layer of exhaust manifold gasket goes against cylinder head, graphite layer of gasket goes against manifold surface.

(2) Turbocharger/exhaust manifold assembly is installed from above/between the engine and cowl panel.

(3) Position turbocharger/exhaust manifold assembly in place. Gradually tighten fasteners, starting at center and progressing outward in both directions to 28 N·m (250 in. lbs.) (Fig. 28). Raise and lower vehicle for fastener access as necessary. Repeat tightening procedure until all fasteners are at specified torque.

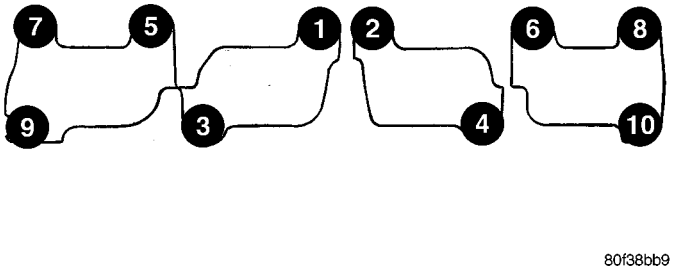

Fig. 28 Exhaust Manifold Tightening Sequence

(4) Install turbocharger elbow. Torque fasteners to 28 N·m (250 in. lbs.) (Fig. 27).

(5) Install turbocharger lower heat shield. Torque fasteners to 28 N·m (250 in. lbs.) (Fig. 27).

(6) Install turbocharger coolant supply line. Install **NEW** washers (Fig. 29). Torque banjo fitting bolt to 30 N·m (22 ft. lbs.). Torque flared fitting to 31 N·m (23 ft. lbs.) (Fig. 24).

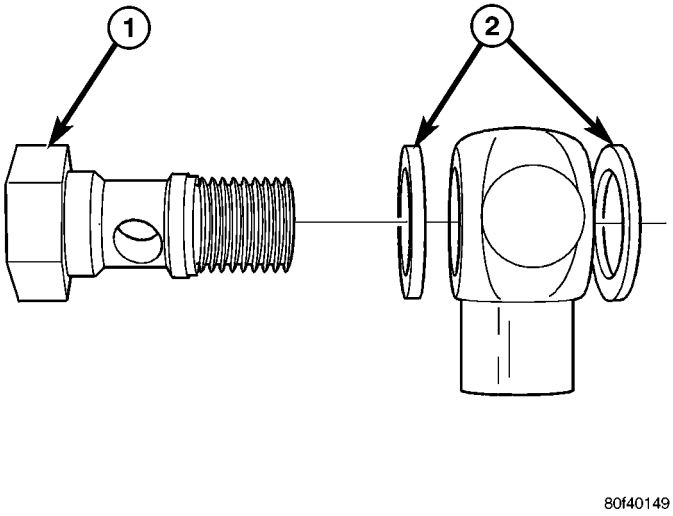

Fig. 29 Banjo Bolt and Washers

1 - BANJO BOLT
2 - WASHERS

(7) Replace oil return tube gasket. Install oil return tube. Torque fasteners to 12 N·m (105 in. lbs.). Make sure heat shield for oil return line is properly installed (Fig. 24).

(8) Install turbocharger support bracket. Torque M8 fasteners to 28 N·m (250 in. lbs.) and M10 fasteners to 54 N·m (40 ft. lbs.) (Fig. 27).

TURBOCHARGER (Continued)

(9) Install turbocharger elbow support bracket (Fig. 27).

(10) Install turbocharger to charge air cooler hose assembly (Fig. 26).

(11) Install catalytic converter and intermediate pipe as an assembly.

(12) Install fasteners securing catalytic converter to exhaust manifold (Fig. 25). Torque fasteners to 28 N·m (250 in. lbs.).

(13) Install muffler. Connect muffler ground strap. (Refer to 11 - EXHAUST SYSTEM/MUFFLER - INSTALLATION).

(14) Connect downstream oxygen sensor.

(15) Lower vehicle.

(16) Connect vacuum hoses to turbocharger.

(17) Install coolant return line. Install **NEW** washers (Fig. 29). Torque banjo fitting bolt to 30 N·m (22 ft. lbs.) (Fig. 24).

(18) Connect oil supply line at turbocharger. Torque flared fitting to 31 N·m (23 ft. lbs.) (Fig. 24).

(19) Install turbocharger upper heat shield. Torque fasteners to 28 N·m (250 in. lbs.) (Fig. 27).

(20) Install upper intake manifold (Refer to 9 - ENGINE/MANIFOLDS/INTAKE MANIFOLD - INSTALLATION).

(21) Install upper intake manifold support bracket (Fig. 23).

(22) Connect vacuum hoses at throttle body and upper intake manifold.

(23) Connect air inlet hose at throttle body (Fig. 22).

(24) Connect electrical connectors to the following components:

- Inlet Air Temperature (IAT) Sensor
- MAP Sensor
- IAC Motor
- Throttle Position Sensor
- Ignition Coil Capacitor
- Upstream Oxygen Sensor

(25) Connect throttle and speed control cables at throttle body.

(26) Connect clean air hose to turbocharger (Fig. 21).

(27) Install air cleaner housing and lid (Refer to 9 - ENGINE/AIR INTAKE SYSTEM/AIR CLEANER HOUSING - INSTALLATION).

(28) Fill cooling system (Refer to 7 - COOLING/ ENGINE - STANDARD PROCEDURE).

(29) Change oil and filter.

(30) Connect negative battery cable.

CHARGE AIR COOLER AND HOSES

REMOVAL

REMOVAL - CHARGE AIR COOLER HOSES

HOSE - CHARGE AIR COOLER TO THROTTLE BODY

(1) Remove air cleaner housing (Refer to 9 - ENGINE/AIR INTAKE SYSTEM/AIR CLEANER HOUSING - REMOVAL).

(2) Disconnect negative battery cable.

(3) Disconnect positive battery cable.

(4) Remove battery and battery tray (Refer to 8 - ELECTRICAL/BATTERY SYSTEM/BATTERY - REMOVAL).

(5) Remove battery tray support bracket.

(6) Loosen hose clamp at charge air cooler (Fig. 30).

(7) Dislodge hose from charge air cooler.

(8) Disconnect Inlet Air Temperature (IAT) sensor connector (Fig. 31).

(9) Disconnect Throttle Inlet Pressure (TIP) hose from charge air cooler hose (Fig. 31).

(10) Loosen hose clamp at throttle body.

(11) Remove charge air cooler hose.

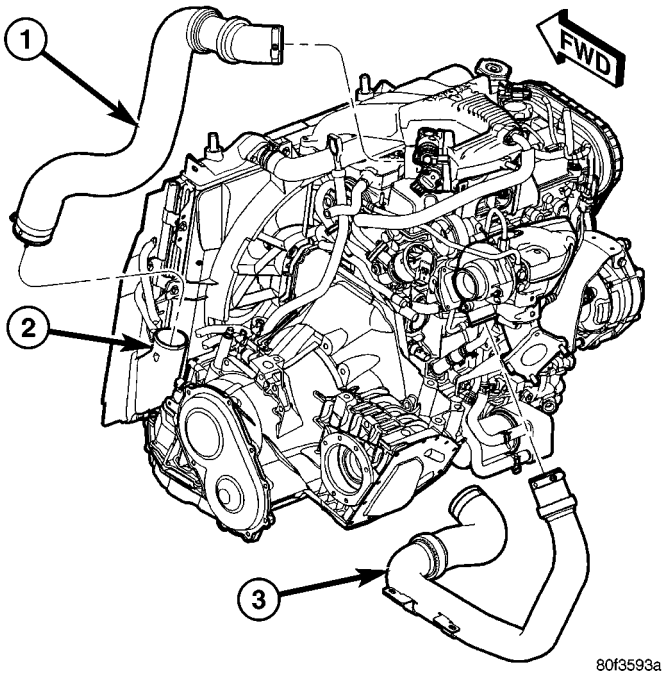

Fig. 30 Charge Air Cooler Hoses

1 - HOSE - CHARGE AIR COOLER TO THROTTLE BODY
2 - CHARGE AIR COOLER
3 - HOSE - TURBOCHARGER TO CHARGE AIR COOLER

CHARGE AIR COOLER AND HOSES (Continued)

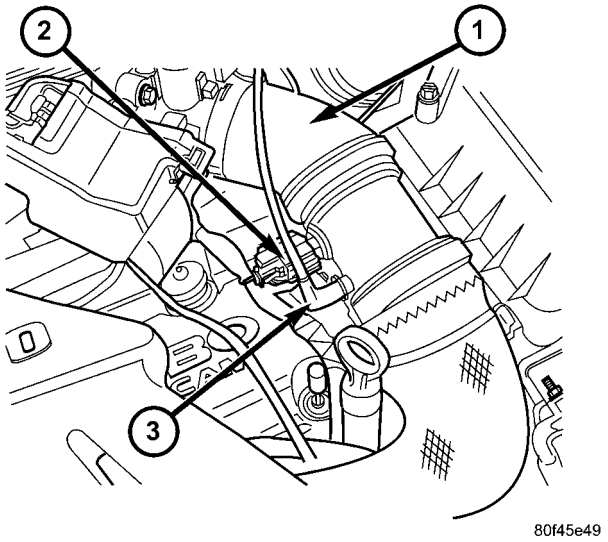

Fig. 31 IAT Sensor - 2.4L Turbo

1 - HOSE - CHARGE AIR COOLER TO THROTTLE BODY
2 - IAT SENSOR
3 - TIP HOSE

HOSE - TURBOCHARGER TO CHARGE AIR COOLER

(1) Raise vehicle on hoist.

(2) Loosen hose clamp at charge air cooler (Fig. 32).

(3) Dislodge hose from charge air cooler.

(4) Loosen hose clamp at turbocharger (Fig. 30).

(5) Dislodge hose from turbocharger.

(6) Remove nuts securing charge air cooler hose to structural collar (Fig. 32).

(7) Remove charge air cooler hose.

REMOVAL - CHARGE AIR COOLER

(1) Drain cooling system (Refer to 7 - COOLING/ENGINE - STANDARD PROCEDURE).

(2) Remove air cleaner housing (Refer to 9 - ENGINE/AIR INTAKE SYSTEM/AIR CLEANER HOUSING - REMOVAL).

(3) Disconnect negative battery cable.

(4) Disconnect positive battery cable.

(5) Remove battery and battery tray (Refer to 8 - ELECTRICAL/BATTERY SYSTEM/BATTERY - REMOVAL).

(6) Remove grille (Refer to 23 - BODY/EXTERIOR/GRILLE - REMOVAL).

(7) Remove upper radiator closure panel and center brace (Refer to 23 - BODY/EXTERIOR/RADIATOR CLOSURE PANEL - REMOVAL) (Fig. 33).

(8) Remove front bumper fascia (Refer to 13 - FRAME & BUMPERS/BUMPERS/FRONT FASCIA - REMOVAL).

(9) Remove front bumper (Refer to 13 - FRAME & BUMPERS/BUMPERS/FRONT BUMPER REINFORCEMENT - REMOVAL).

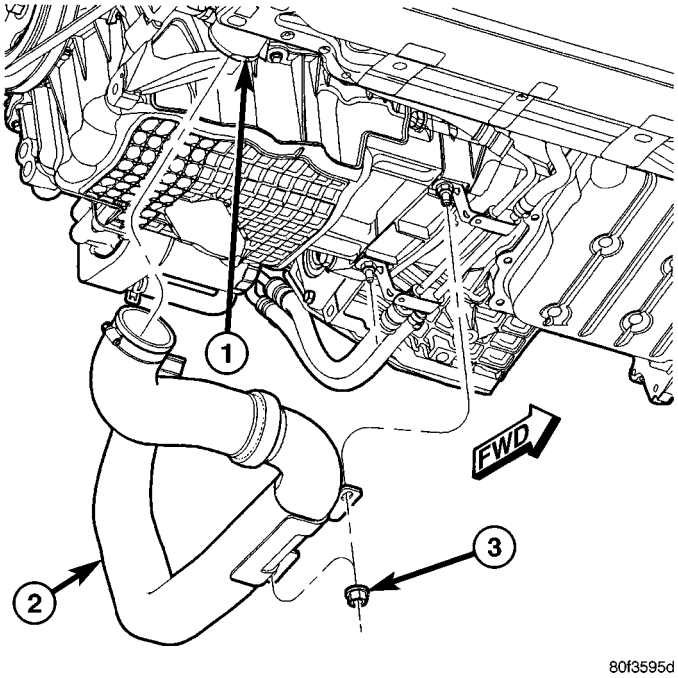

Fig. 32 Charge Air Cooler Hoses

1 - CHARGE AIR COOLER
2 - HOSE - TURBOCHARGER TO CHARGE AIR COOLER
3 - NUT

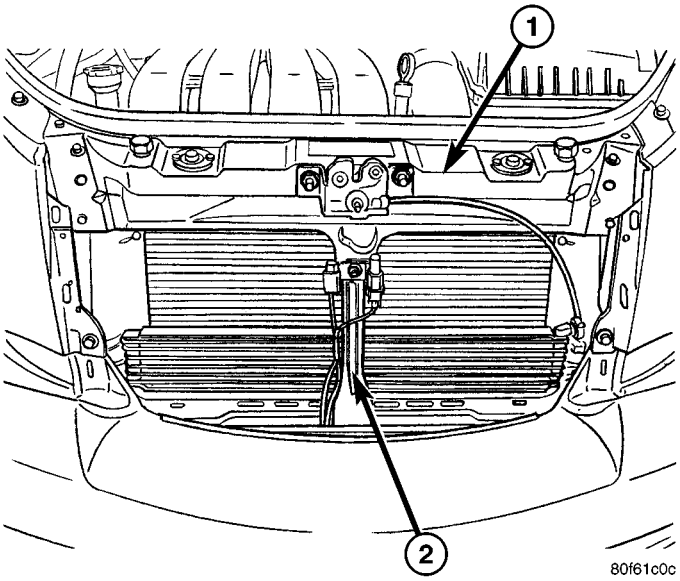

Fig. 33 Upper Radiator Closure Panel and Center Brace

1 - UPPER RADIATOR CLOSURE PANEL
2 - CENTER BRACE

(10) Loosen charge air cooler hose clamps. Disconnect charge air cooler hoses (Fig. 30) and (Fig. 32).

(11) Remove radiator fan (Refer to 7 - COOLING/ENGINE/RADIATOR FAN - REMOVAL) (Fig. 34).

(12) Remove charge air cooler fasteners (Fig. 34).

CHARGE AIR COOLER AND HOSES (Continued)

(13) Remove radiator (Refer to 7 - COOLING/ENGINE/RADIATOR - REMOVAL).

(14) Remove charge air cooler.

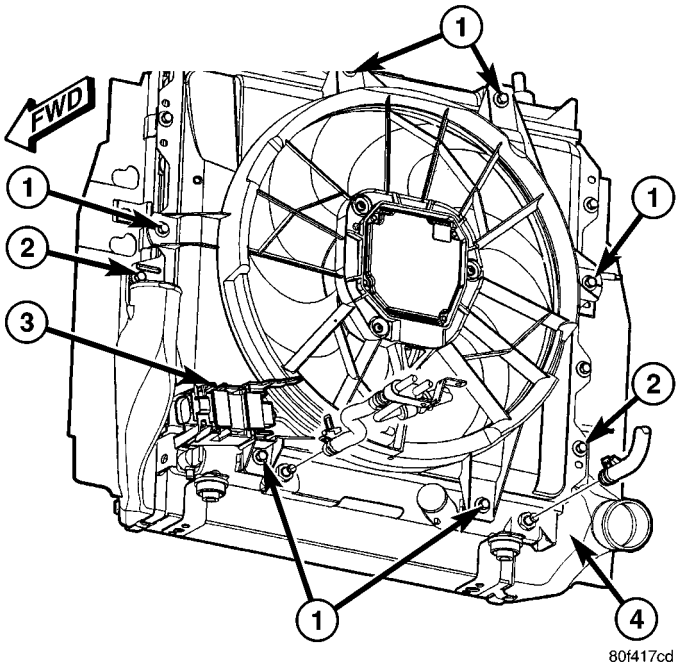

Fig. 34 Cooling Module - 2.4L Turbo

1 - RADIATOR FAN FASTENERS
2 - CHARGE AIR COOLER FASTENERS
3 - RADIATOR FAN CONNECTOR
4 - CHARGE AIR COOLER

INSTALLATION

INSTALLATION - CHARGE AIR COOLER HOSES

HOSE - CHARGE AIR COOLER TO THROTTLE BODY

(1) Position hose to mounting location.

(2) Connect hose to throttle body.

(3) Connect hose to charge air cooler (Fig. 30).

(4) Tighten hose clamps to 1.7 N·m (15 in. lbs.).

(5) Connect Throttle Inlet Pressure (TIP) hose to charge air cooler hose (Fig. 31).

(6) Connect Inlet Air Temperature (IAT) sensor connector (Fig. 31).

(7) Install battery tray support bracket.

(8) Install battery tray and battery (Refer to 8 - ELECTRICAL/BATTERY SYSTEM/BATTERY - INSTALLATION).

(9) Connect positive battery cable.

(10) Connect negative battery cable.

(11) Install air cleaner housing (Refer to 9 - ENGINE/AIR INTAKE SYSTEM/AIR CLEANER HOUSING - INSTALLATION).

HOSE - TURBOCHARGER TO CHARGE AIR COOLER

(1) Position hose to mounting location.

(2) Temporarily install nuts securing charge air cooler hose to structural collar (Fig. 32).

(3) Connect hose to turbocharger (Fig. 30).

(4) Connect hose to charge air cooler (Fig. 32).

(5) Tighten hose clamps to 1.7 N·m (15 in. lbs.).

(6) Tighten nuts securing charge air cooler hose to structural collar (Fig. 32).

(7) Lower vehicle.

INSTALLATION - CHARGE AIR COOLER

(1) Position charge air cooler to mounting location.

NOTE: When lowering radiator, make sure lower radiator pins engage properly through charge air cooler tabs (Fig. 35).

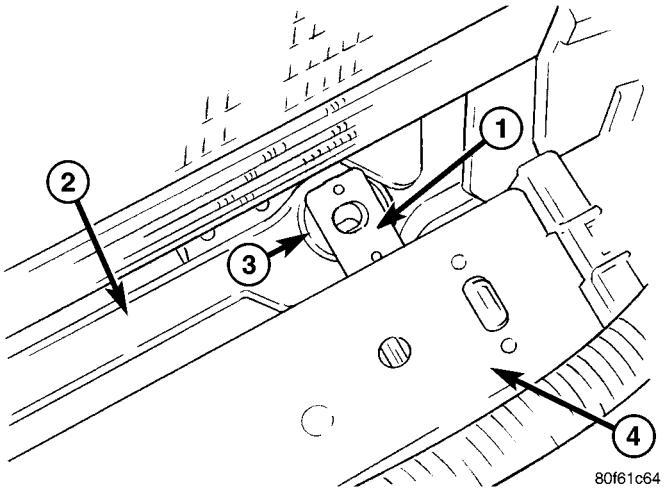

Fig. 35 Charge Air Cooler Locating Tab

1 - LOCATING TAB
2 - LOWER RADIATOR SUPPORT CROSSMEMBER
3 - RADIATOR MOUNT BUSHING
4 - CHARGE AIR COOLER

(2) Install radiator (Refer to 7 - COOLING/ENGINE/RADIATOR - INSTALLATION).

(3) Install fasteners attaching charge air cooler to radiator. Torque fasteners to 8 N·m (70 in. lbs.) (Fig. 34).

(4) Install radiator fan (Refer to 7 - COOLING/ENGINE/RADIATOR FAN - INSTALLATION).

(5) Connect charge air cooler hoses. Tighten hose clamps to 1.7 N·m (15 in. lbs.) (Fig. 30) and (Fig. 32).

(6) Install front bumper (Refer to 13 - FRAME & BUMPERS/BUMPERS/FRONT BUMPER REINFORCEMENT - INSTALLATION).

(7) Install front bumper fascia (Refer to 13 - FRAME & BUMPERS/BUMPERS/FRONT FASCIA - INSTALLATION).

(8) Install upper radiator closure panel and center brace (Refer to 23 - BODY/EXTERIOR/RADIATOR CLOSURE PANEL - INSTALLATION) (Fig. 33).

(9) Install grille (Refer to 23 - BODY/EXTERIOR/GRILLE - INSTALLATION).

CHARGE AIR COOLER AND HOSES (Continued)

(10) Install battery tray and battery (Refer to 8 - ELECTRICAL/BATTERY SYSTEM/BATTERY - INSTALLATION).

(11) Connect positive battery cable.

(12) Connect negative battery cable.

(13) Install air cleaner housing (Refer to 9 - ENGINE/AIR INTAKE SYSTEM/AIR CLEANER HOUSING - INSTALLATION).

(14) Fill cooling system (Refer to 7 - COOLING/ ENGINE - STANDARD PROCEDURE).

LINES AND HOSES

REMOVAL - LINES AND HOSES

NOTE: For line and hose location refer to (Fig. 36).

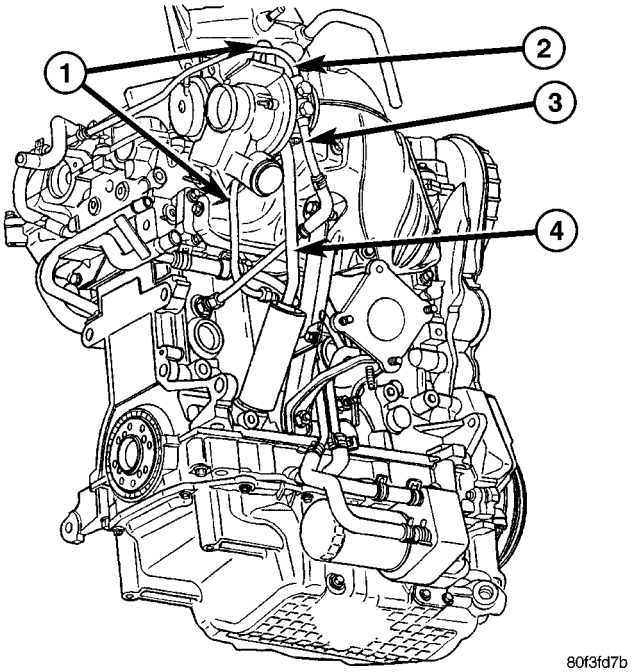

Fig. 36 Turbocharger Lines and Hoses

1 - OIL SUPPLY LINE
2 - COOLANT RETURN LINE
3 - COOLANT SUPPLY LINE
4 - OIL RETURN TUBE

COOLANT SUPPLY LINE

(1) Raise vehicle on hoist.

(2) Drain cooling system (Refer to 7 - COOLING/ ENGINE - STANDARD PROCEDURE).

(3) Remove banjo bolt from coolant supply line at turbocharger (Fig. 37).

(4) Disconnect coolant supply line flared fitting from brass fitting at engine block (Fig. 38).

(5) Remove coolant supply line.

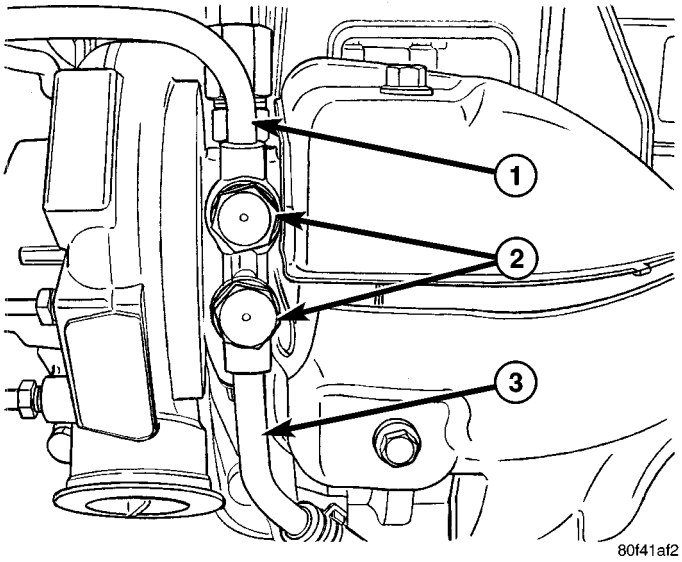

Fig. 37 Coolant Lines - Banjo Fittings

1 - COOLANT RETURN LINE
2 - BANJO BOLTS - 30 N·m (22 ft. lbs.)
3 - COOLANT SUPPLY LINE

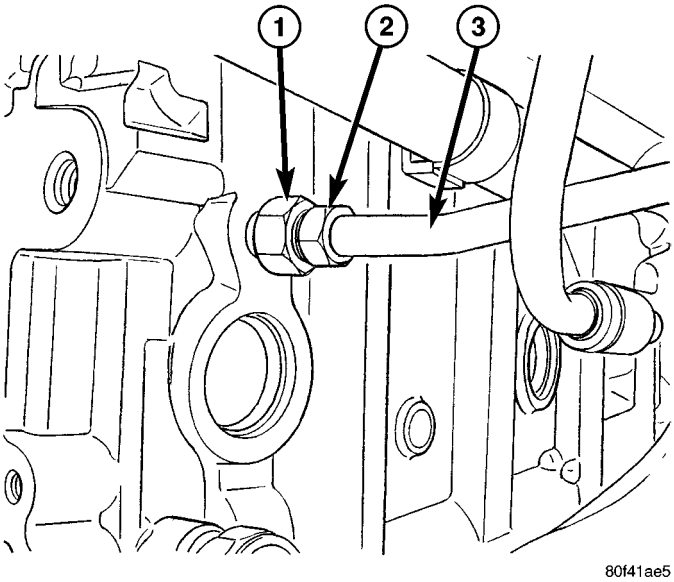

Fig. 38 Coolant Supply Line - Engine Block Fitting

1 - BRASS FITTING - 41 N·m (30 ft. lbs.)
2 - FLARED FITTING - 31 N·m (23 ft. lbs.)
3 - COOLANT SUPPLY LINE

COOLANT RETURN LINE

(1) Drain cooling system (Refer to 7 - COOLING/ ENGINE - STANDARD PROCEDURE).

(2) Remove air cleaner housing (Refer to 9 - ENGINE/AIR INTAKE SYSTEM/AIR CLEANER HOUSING - REMOVAL).

(3) Disconnect Inlet Air Temperature (IAT) sensor connector (Fig. 31).

LINES AND HOSES (Continued)

(4) Disconnect Throttle Inlet Pressure (TIP) hose from charge air cooler hose (Fig. 31).

(5) Loosen hose clamp at throttle body.

(6) Disconnect charge air cooler hose from throttle body. Reposition charge air cooler hose.

(7) Remove fastener securing coolant return line bracket to cylinder head cover stud (Fig. 39).

(8) Remove hose clamp from coolant return line at heater tube (Fig. 39). Disconnect hose from heater tube.

(9) Remove banjo bolt from coolant return line at turbocharger (Fig. 37).

(10) Remove coolant return line.

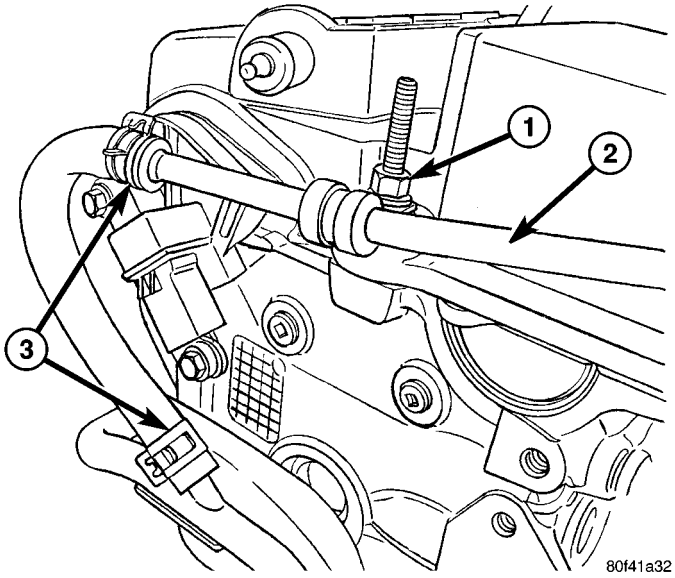

Fig. 39 Coolant Return Line Bracket

1 - NUT
2 - COOLANT RETURN LINE
3 - HOSE CLAMPS

OIL SUPPLY LINE

(1) Raise vehicle on hoist.

(2) Remove elbow support bracket (Fig. 40).

(3) Disconnect oil supply line flared fitting from brass fitting at engine block (Fig. 41).

(4) Lower vehicle.

(5) Disconnect oil supply line flared fitting from brass fitting at turbocharger (Fig. 42).

(6) Remove oil supply line.

OIL RETURN LINE

(1) Raise vehicle on hoist.

(2) Remove the two fasteners securing the oil return line to the turbocharger.

(3) Remove hose clamp from oil return line.

(4) Remove oil return line from crankcase nipple (Fig. 36).

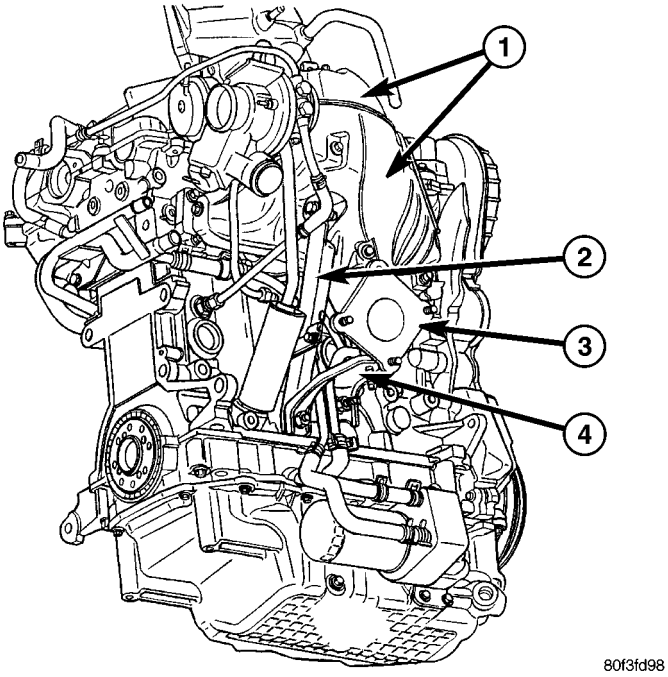

Fig. 40 Turbocharger Brackets and Heat Shields

1 - UPPER/LOWER HEAT SHIELDS
2 - TURBOCHARGER SUPPORT BRACKET
3 - ELBOW
4 - ELBOW SUPPORT BRACKET

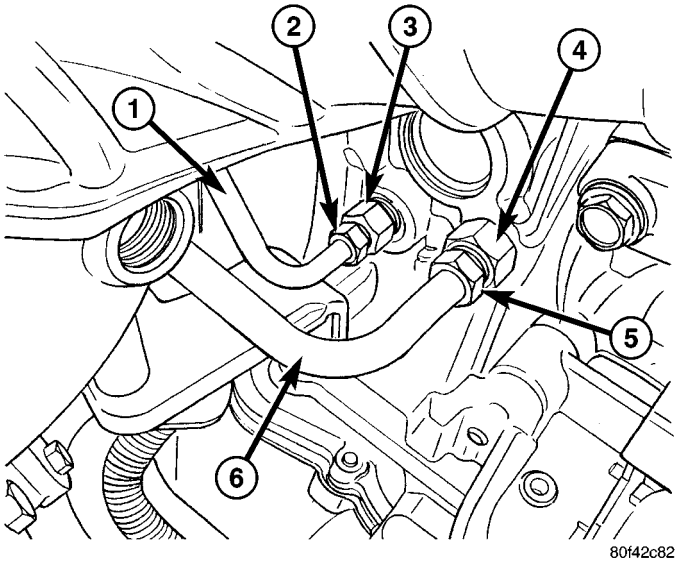

Fig. 41 Oil Supply Line - Engine Block Fitting

1 - OIL SUPPLY LINE
2 - FLARED FITTING - 31 N·m (23 ft. lbs.)
3 - BRASS FITTING - 41 N·m (30 ft. lbs.)
4 - BRASS FITTING - 41 N·m (30 ft. lbs.)
5 - FLARED FITTING - 31 N·m (23 ft. lbs.)
6 - OIL COOLER COOLANT LINE

LINES AND HOSES (Continued)

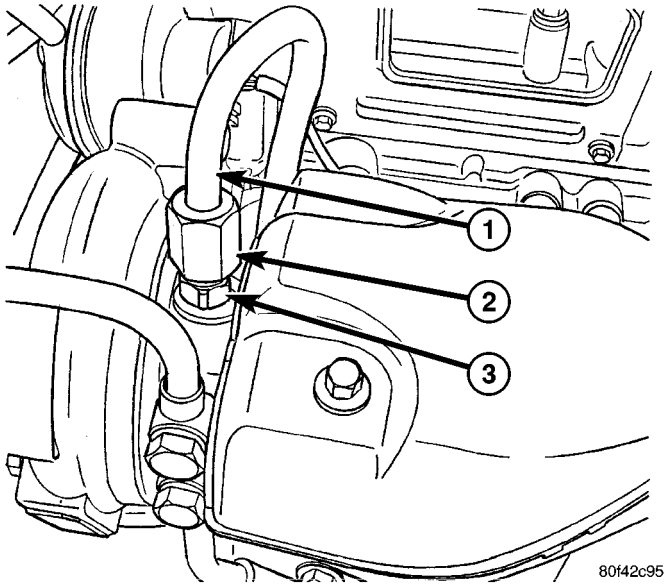

Fig. 42 Oil Supply Line - Turbocharger Fitting

1 - OIL SUPPLY LINE
2 - FLARED FITTING - 31 N·m (23 ft. lbs.)
3 - BRASS FITTING - 41 N·m (30 ft. lbs.)

INSTALLATION - LINES AND HOSES

NOTE: For line and hose location refer to (Fig. 36).

COOLANT SUPPLY LINE

(1) If brass fitting was removed from engine block, apply thread sealer to threads and install in engine block. Torque brass fitting to 41 N·m (30 ft. lbs.).

(2) Position coolant supply line to mounting location.

(3) Install **NEW** washers on banjo fitting of coolant supply line (Fig. 43). Hand start banjo bolt.

(4) Hand start flared fitting of coolant supply line.

(5) Torque banjo fitting bolt to 30 N·m (22 ft. lbs.) (Fig. 37).

(6) Torque flared fitting to 31 N·m (23 ft. lbs.) (Fig. 38).

(7) Lower vehicle.

(8) Fill cooling system (Refer to 7 - COOLING/ENGINE - STANDARD PROCEDURE).

COOLANT RETURN LINE

(1) Position coolant return line to mounting location.

(2) Install **NEW** washers on banjo fitting of coolant return line (Fig. 43). Hand start banjo bolt.

(3) Install hose onto heater tube. Install hose clamp (Fig. 39).

(4) Torque banjo fitting bolt to 30 N·m (22 ft. lbs.) (Fig. 37).

(5) Install fastener securing coolant return line bracket to cylinder head cover stud (Fig. 39).

(6) Connect charge air cooler hose to throttle body.

(7) Tighten hose clamp to 1.7 N·m (15 in. lbs.).

(8) Connect Throttle Inlet Pressure (TIP) hose to charge air cooler hose (Fig. 31).

(9) Connect Inlet Air Temperature (IAT) sensor connector (Fig. 31).

(10) Install air cleaner housing (Refer to 9 - ENGINE/AIR INTAKE SYSTEM/AIR CLEANER HOUSING - INSTALLATION).

(11) Fill cooling system (Refer to 7 - COOLING/ENGINE - STANDARD PROCEDURE).

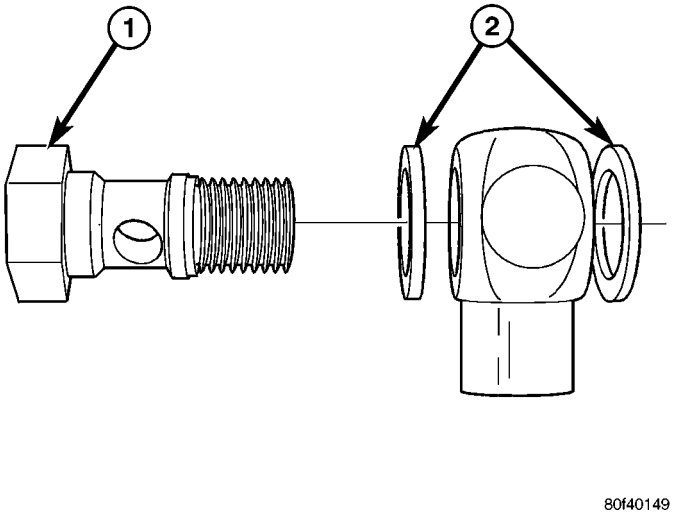

Fig. 43 Banjo Bolt and Washers

1 - BANJO BOLT
2 - WASHERS

OIL SUPPLY LINE

(1) If brass fitting was removed from engine block or turbocharger, apply thread sealer to threads and install. Torque brass fitting to 41 N·m (30 ft. lbs.).

(2) Position oil supply line to mounting location.

(3) Hand start flared fitting at turbocharger (Fig. 42).

(4) Raise vehicle on hoist.

(5) Hand start flared fitting at engine block (Fig. 41).

(6) Torque flared fittings to 31 N·m (23 ft. lbs.) (Fig. 41) and (Fig. 42).

(7) Install elbow support bracket (Fig. 40).

(8) Lower vehicle.

OIL RETURN LINE

(1) Clean gasket surfaces.

(2) Install new gasket.

(3) Install oil return line hose over crankcase nipple (Fig. 36).

LINES AND HOSES (Continued)

(4) Install the two fasteners securing the oil return line to the turbocharger. Torque fasteners to 12 N·m (105 in. lbs.).
(5) Install hose clamp for oil return line hose.
(6) Lower vehicle.

SOLENOIDS AND VACUUM HARNESS

DESCRIPTION

NOTE: Refer to (Fig. 44) and (Fig. 45) for component location and vacuum harness routing.

Turbocharged vehicles are equipped with three solenoids that are PCM controlled. They are mounted to the right shock tower. A vacuum harness connects the solenoids to their respective component.

- Wastegate Actuator Solenoid
- Surge Valve Actuator Solenoid
- Throttle Inlet Pressure (TIP) Solenoid

REMOVAL

NOTE: For specific solenoid location, refer to (Fig. 45).

(1) Remove nuts securing solenoid mounting bracket to shock tower (Fig. 46).

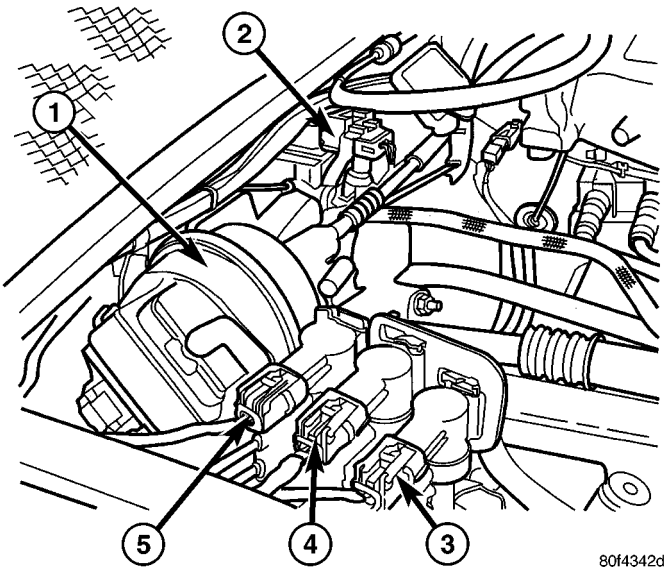

Fig. 45 Turbocharger Solenoids

1 - SPEED CONTROL SERVO
2 - TIP SENSOR
3 - WASTEGATE ACTUATOR SOLENOID
4 - SURGE VALVE ACTUATOR SOLENOID
5 - TIP SOLENOID

(2) Disconnect solenoid electrical connector.
(3) Disconnect vacuum harness connector from solenoid.

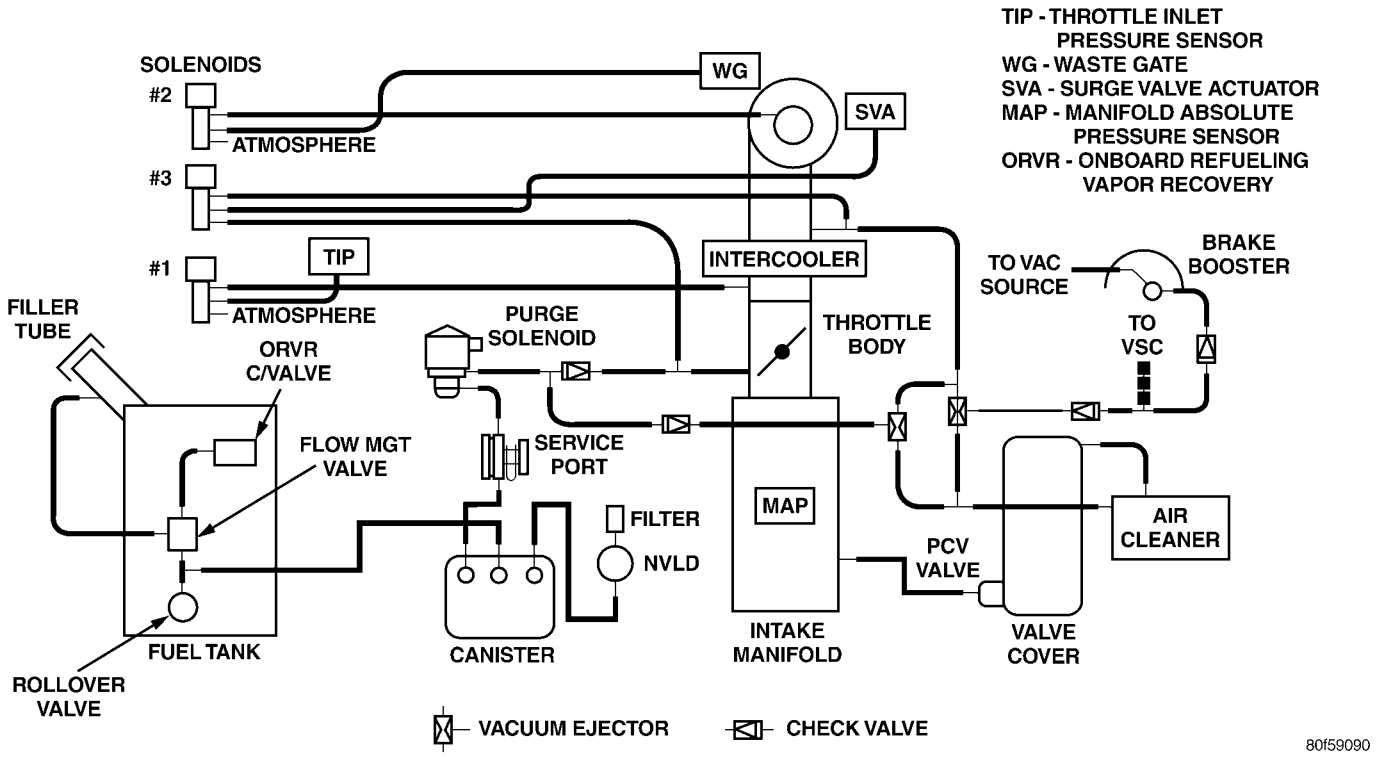

Fig. 44 Vacuum Harness Schematic

SOLENOIDS AND VACUUM HARNESS (Continued)

(4) Push on solenoid lock tab and slide solenoid off bracket (Fig. 47).

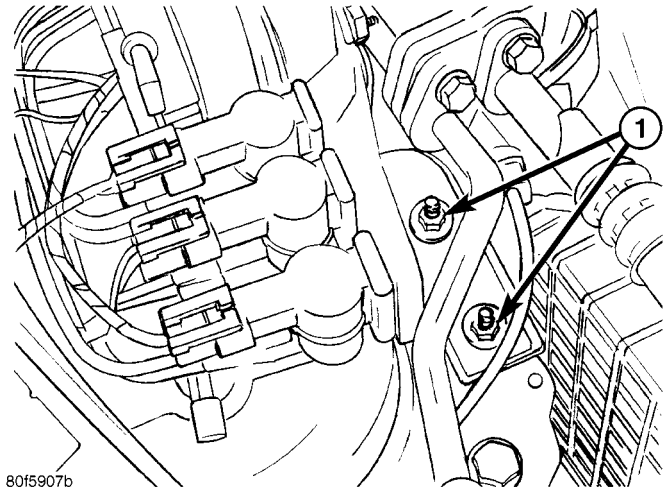

Fig. 46 Solenoid Mounting Bracket

1 - NUTS

INSTALLATION

(1) Slide solenoid onto mounting bracket until lock tab engages (Fig. 47).

(2) Connect vacuum harness connector to solenoid.

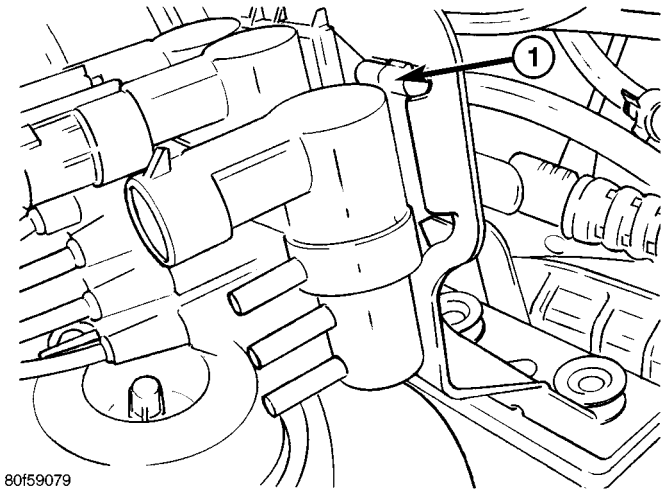

Fig. 47 Solenoid Lock Tab

1 - LOCK TAB

(3) Connect solenoid electrical connector.

(4) Install nuts securing solenoid mounting bracket to shock tower (Fig. 46).

FRAMES & BUMPERS

TABLE OF CONTENTS

page

FRONT BUMPER REINFORCEMENT
REMOVAL 1
INSTALLATION 1
FRONT BUMPER FASCIA
REMOVAL 2
INSTALLATION 2
REAR BUMPER FASCIA
REMOVAL 3
INSTALLATION 3
REAR BUMPER REINFORCEMENT
REMOVAL 3
INSTALLATION 3
FRAME
SPECIFICATIONS
SPECIFICATIONS - FRAME DIMENSIONS . . . 4
SPECIFICATIONS - TORQUE 8
FRONT CROSSMEMBER
REMOVAL 9
INSTALLATION 11
FRONT EMERGENCY TOW EYE
REMOVAL 13
INSTALLATION 13
REAR EMERGENCY TOW EYE
REMOVAL 13
INSTALLATION 13

FRONT BUMPER REINFORCEMENT

REMOVAL

(1) Remove grille (Refer to 23 - BODY/EXTERIOR/GRILLE - REMOVAL).

(2) Remove front fascia (Refer to 13 - FRAME & BUMPERS/BUMPERS/FRONT FASCIA - REMOVAL).

(3) Remove bolts attaching reinforcement to the rail assembly and Remove reinforcement (Fig. 1).

(4) Remove bumper reinforcement from vehicle.

INSTALLATION

(1) Place bumper reinforcement in position (Fig. 1).

(2) Install bolts attaching reinforcement to rail assembly.

(3) Install front fascia (Refer to 13 - FRAME & BUMPERS/BUMPERS/FRONT FASCIA - INSTALLATION).

(4) Install grille (Refer to 23 - BODY/EXTERIOR/GRILLE - INSTALLATION).

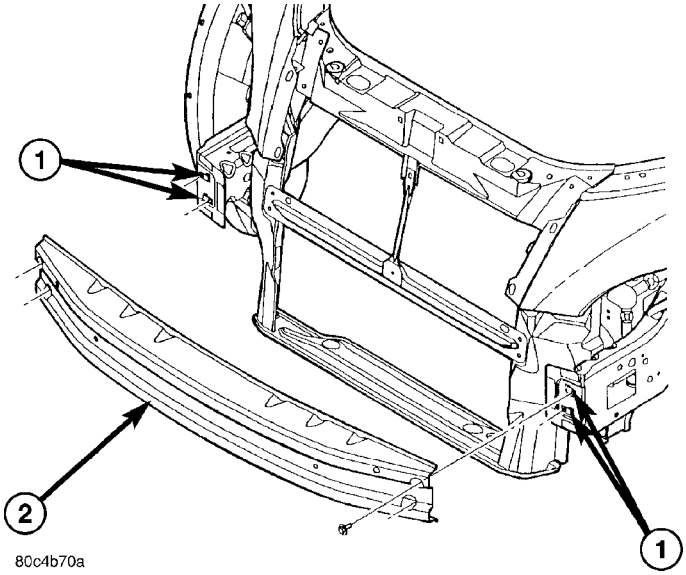

Fig. 1 Front Bumper Reinforcement

1 - U-NUT(S)
2 - FRONT BUMPER FASCIA REINFORCEMENT

FRONT BUMPER FASCIA

REMOVAL

(1) Remove Grille Attaching screws.
(2) Remove Grille.
(3) Remove nuts attaching front bumper fascia to bottom of fender flange (Fig. 2).
(4) Remove fasteners attaching fascia to fender flange (Fig. 3).
(5) Remove air dam fasteners from crossmember.
(6) Remove splash shield attaching screws.
(7) Remove fascia from vehicle.

INSTALLATION

(1) Position fascia on vehicle (Fig. 2).
(2) Install splash shield attaching screws.
(3) Install air dam fasteners to crossmember.
(4) Install fasteners attaching fascia to fender flange (Fig. 3).
(5) Install nuts attaching front bumper fascia to bottom of fender flange.
(6) Install Grille and attaching screws.

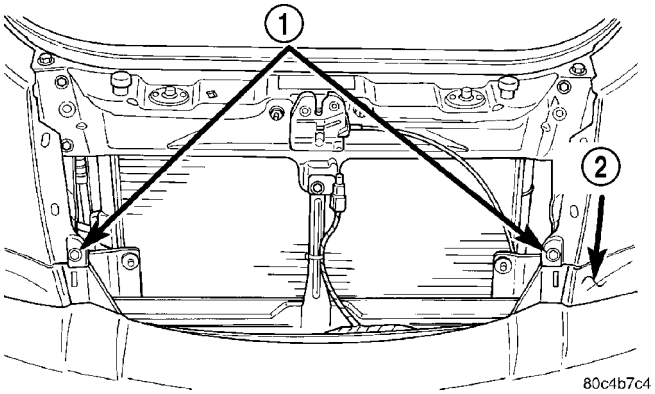

Fig. 3 FRONT FASCIA ATTACHING POINTS

1 - ATTACHING POINTS
2 - FRONT FASCIA

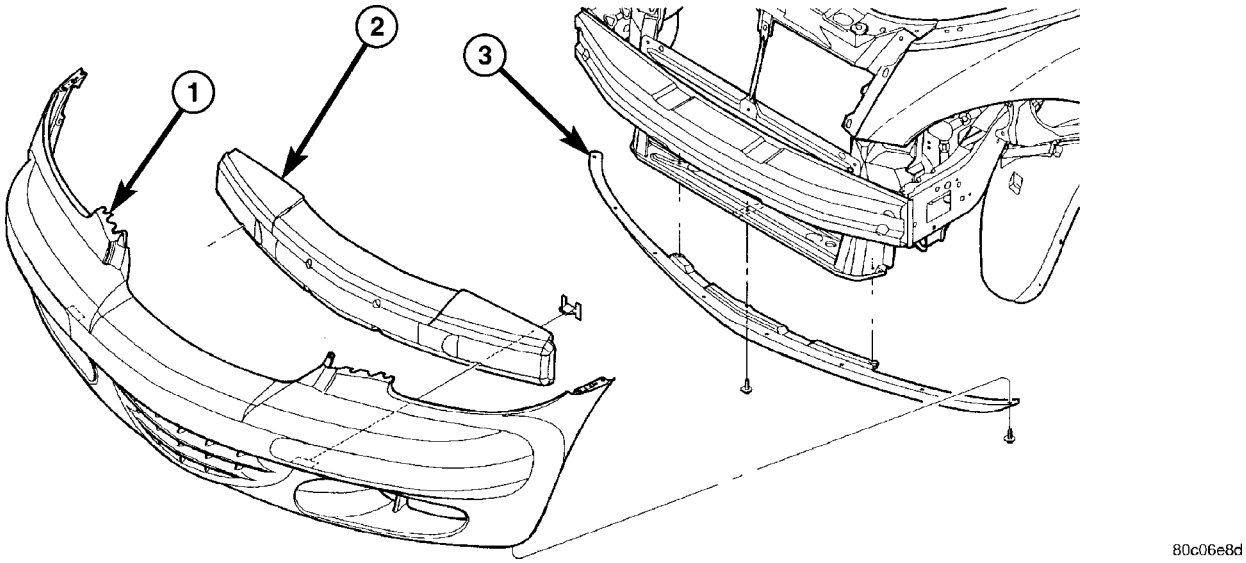

Fig. 2 FRONT BUMPER FASCIA

1 - FRONT BUMPER FASCIA
2 - FRONT BUMPER ENERGY FOAM
3 - RADIATOR AIR DAM

REAR BUMPER FASCIA

REMOVAL

(1) Open liftgate.

(2) Remove the rubber body plugs or mastic tape patches, if equipped.

(3) Remove nuts attaching fascia to lower floor closure (Fig. 4).

(4) Raise vehicle on hoist.

(5) Disconnect license lamp.

(6) Remove splash shield from fascia in the wheel opening area (Refer to 23 - BODY/EXTERIOR/FRONT END SPLASH SHIELDS - REMOVAL).

(7) Remove screws attaching fascia to lower quarter panels.

(8) Remove fascia from vehicle.

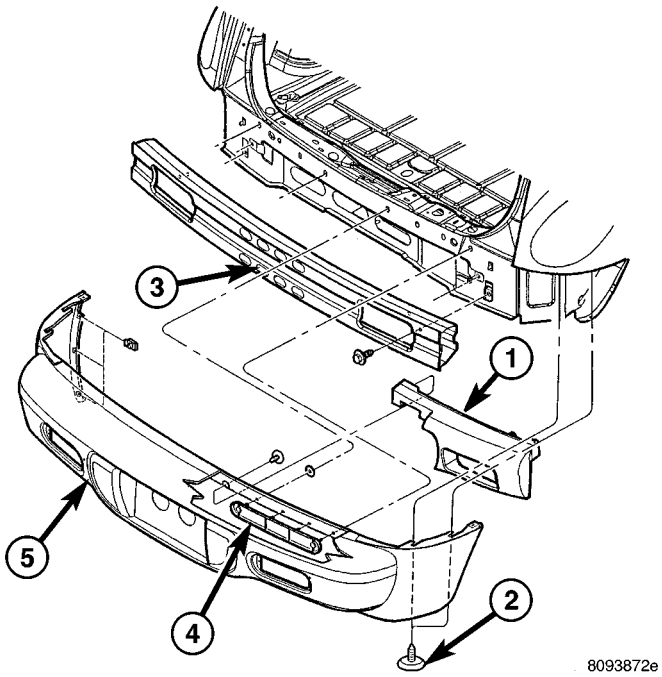

Fig. 4 REAR BUMPER FASCIA

1 - REAR BUMPER FASCIA ENERGY FOAM
2 - PUSH PIN
3 - REAR BUMPER REINFORCEMENT
4 - REAR FASCIA TO CLOSURE STUD PLATE
5 - REAR BUMPER FASCIA

INSTALLATION

(1) Position fascia on vehicle (Fig. 4).

(2) Position fascia slots to push pins on lower quarter panels

(3) Slide fascia forward on push pins

(4) Install screws attaching fascia to lower quarter panels.

(5) Install splash shield in the wheel opening area (Refer to 23 - BODY/EXTERIOR/FRONT END SPLASH SHIELDS - INSTALLATION).

(6) Connect license lamp.

(7) Lower vehicle.

(8) Install nuts attaching fascia to lower floor closure.

(9) Install the rubber body plugs or install new mastic tape patches, if equipped.

(10) Close liftgate.

REAR BUMPER REINFORCEMENT

REMOVAL

(1) Remove rear fascia (Refer to 13 - FRAME & BUMPERS/BUMPERS/REAR BUMPER - REMOVAL).

(2) Remove bolts attaching reinforcement to rear closure panel (Fig. 5).

(3) Remove bumper reinforcement from vehicle.

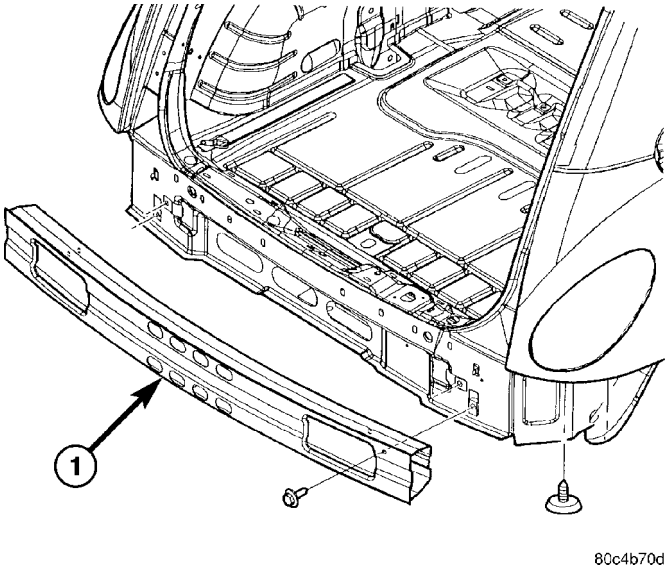

Fig. 5 Rear Bumper Reinforcement

1 - REAR BUMPER REINFORCEMENT

INSTALLATION

(1) Position bumper reinforcement to vehicle (Fig. 5).

(2) Install bolts attaching reinforcement to rear closure panel.

(3) Install rear fascia.

FRAME

SPECIFICATIONS

SPECIFICATIONS - FRAME DIMENSIONS

Frame dimensions are listed in metric scale. All dimensions are from center to center of Principal Locating Point (PLP), or from center to center of PLP and fastener location.

VEHICLE PREPARATION

Position the vehicle on a level work surface. Using screw or bottle jacks, adjust the vehicle PLP heights to the specified dimension above a level work surface. Vertical dimensions can be taken from the work surface to the locations indicated were applicable.

INDEX

DESCRIPTION	FIGURE
ENGINE COMPARTMENT TOP VIEW	6
ENGINE COMPARTMENT SIDE AND BOTTOM VIEW	7
REAR FRAME SECTION SIDE AND BOTTOM VIEW	8
WINDSHIELD OPENING DIMENSIONS	9
FRONT AND REAR DOOR OPENING DIMENSIONS	10
REAR LIFTGATE OPENING DIMENSIONS	11

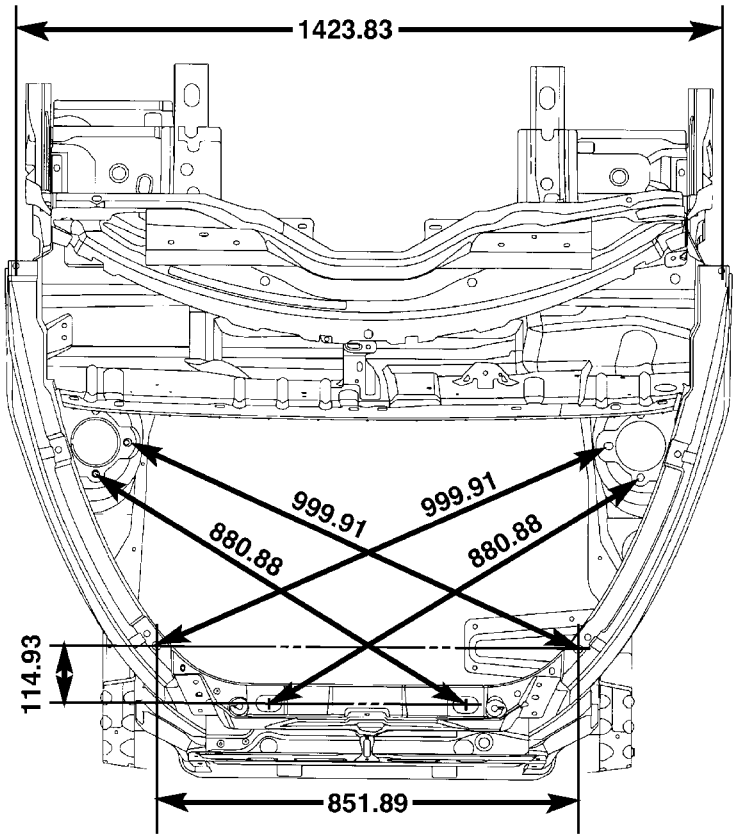

Fig. 6 ENGINE COMPARTMENT TOP VIEW

FRAME (Continued)

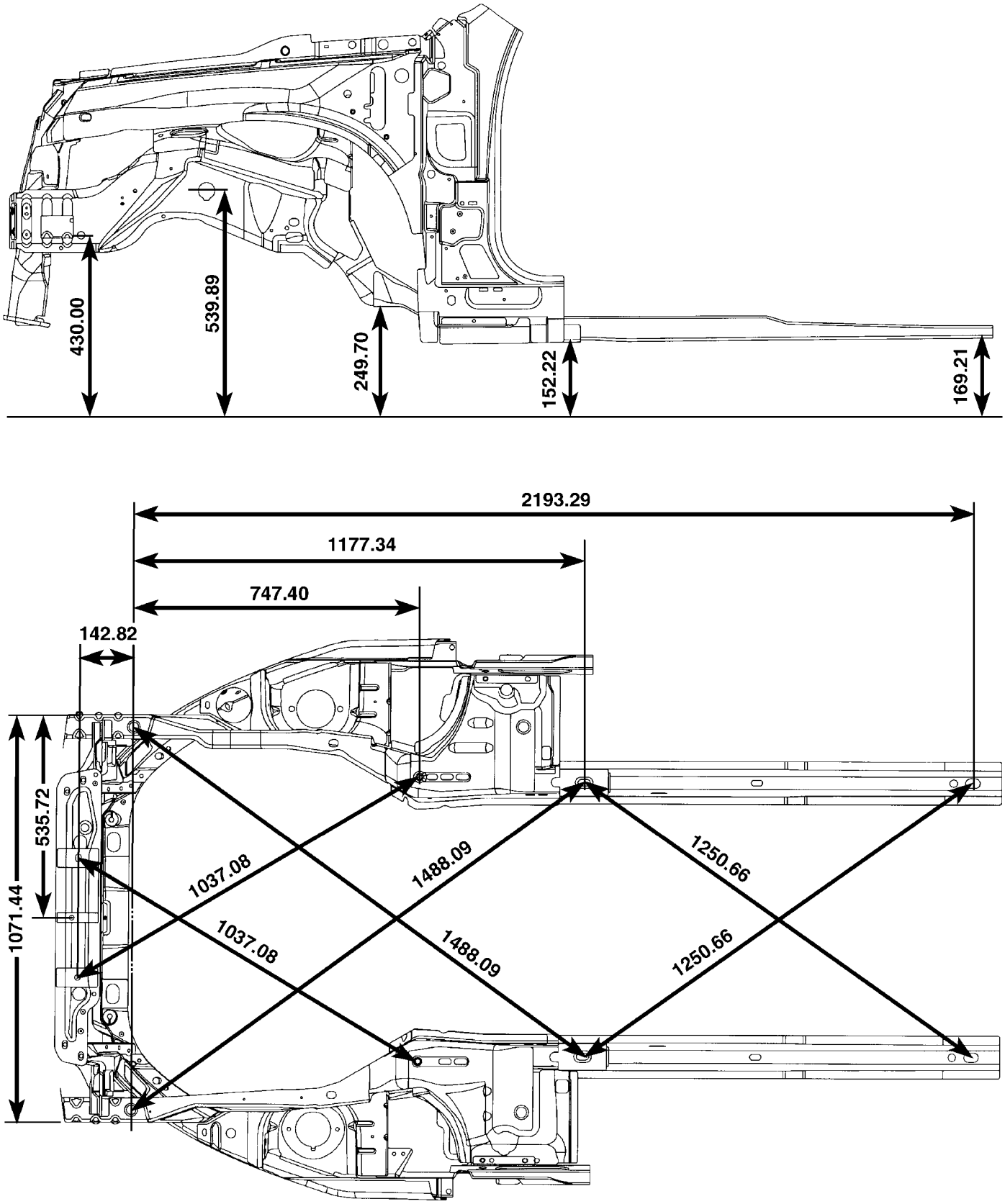

Fig. 7 ENGINE COMPARTMENT SIDE AND BOTTOM VIEW

FRAME (Continued)

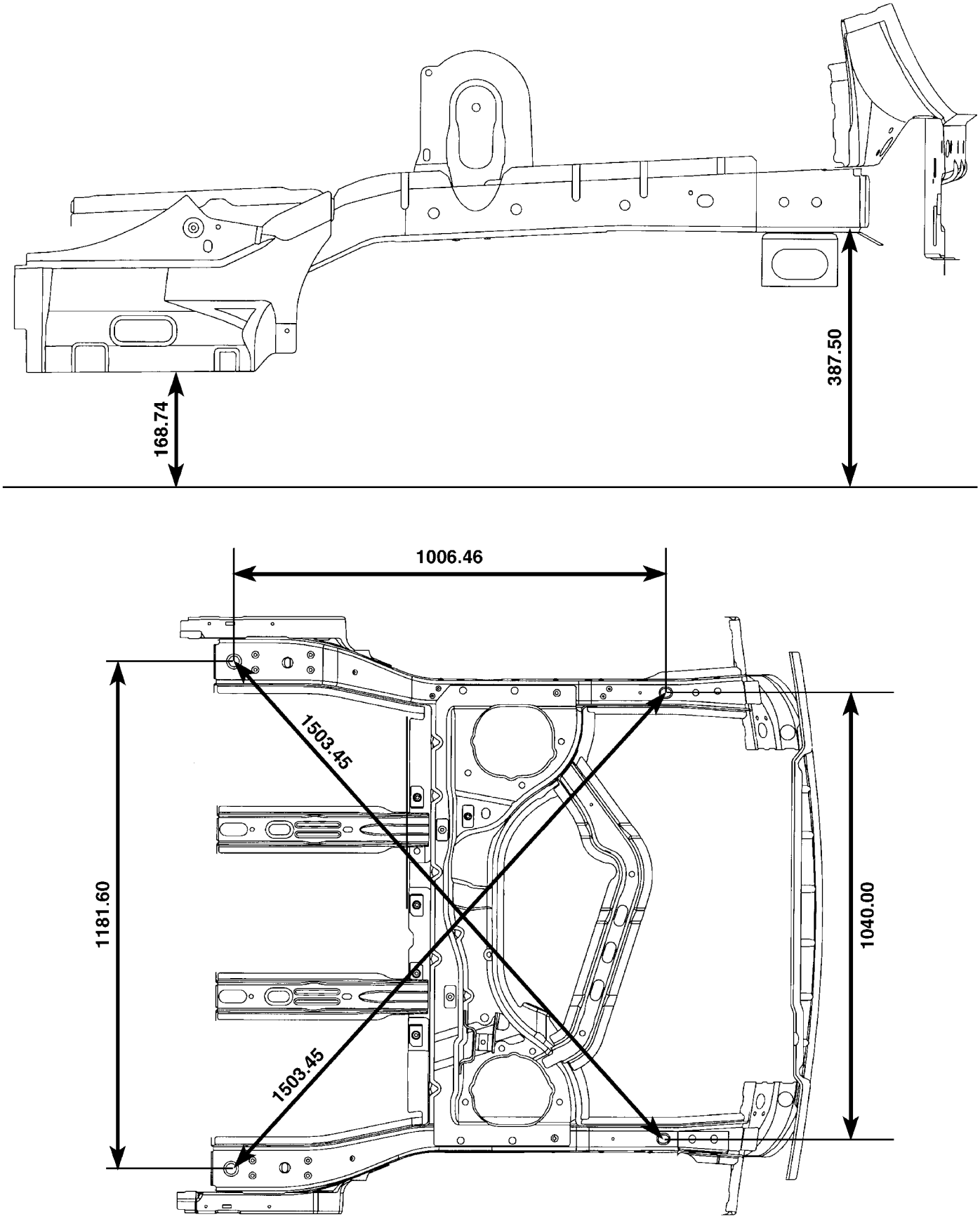

Fig. 8 REAR FRAME SECTION SIDE AND BOTTOM VIEW

FRAME (Continued)

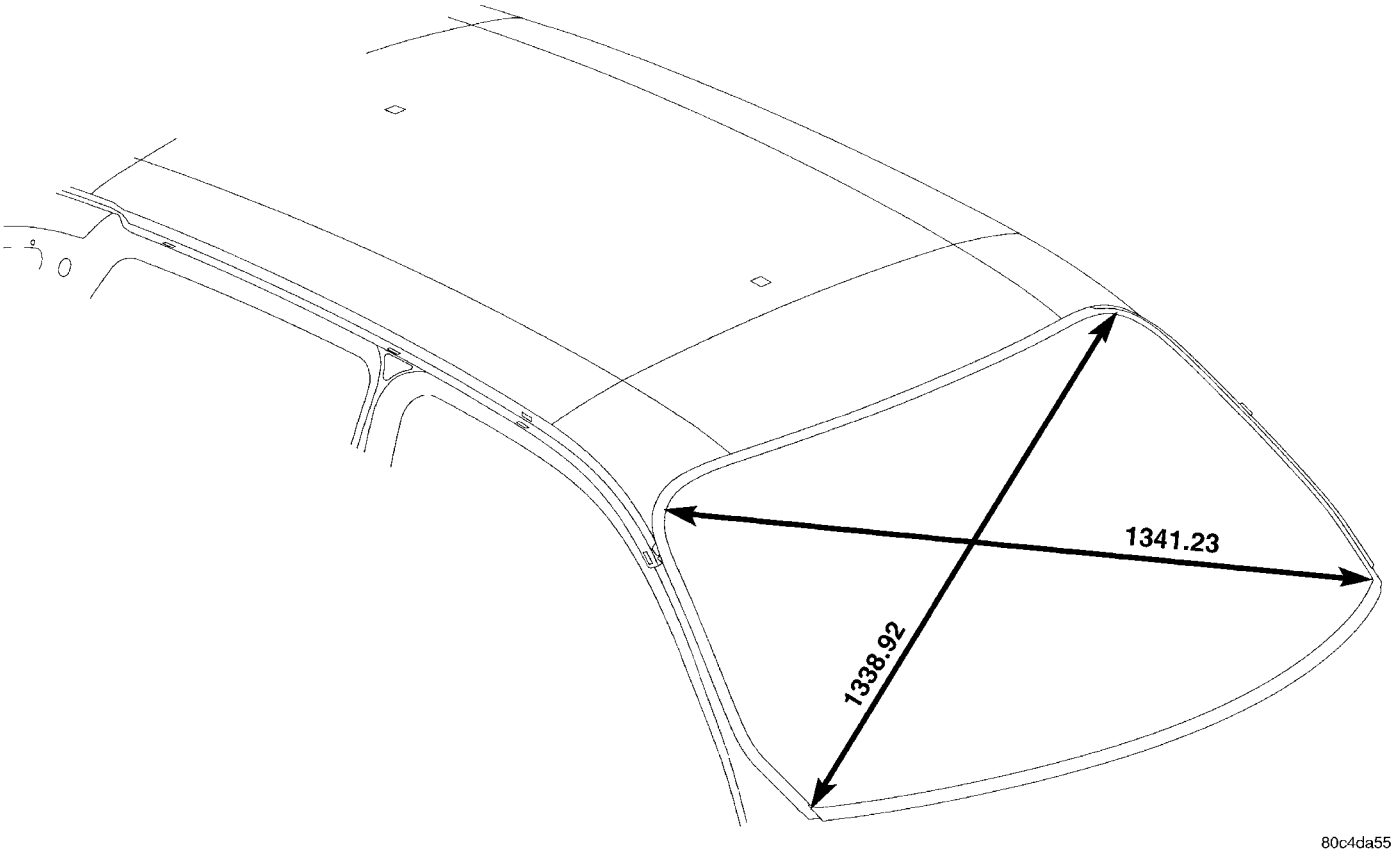

Fig. 9 WINDSHIELD OPENING DIMENSIONS

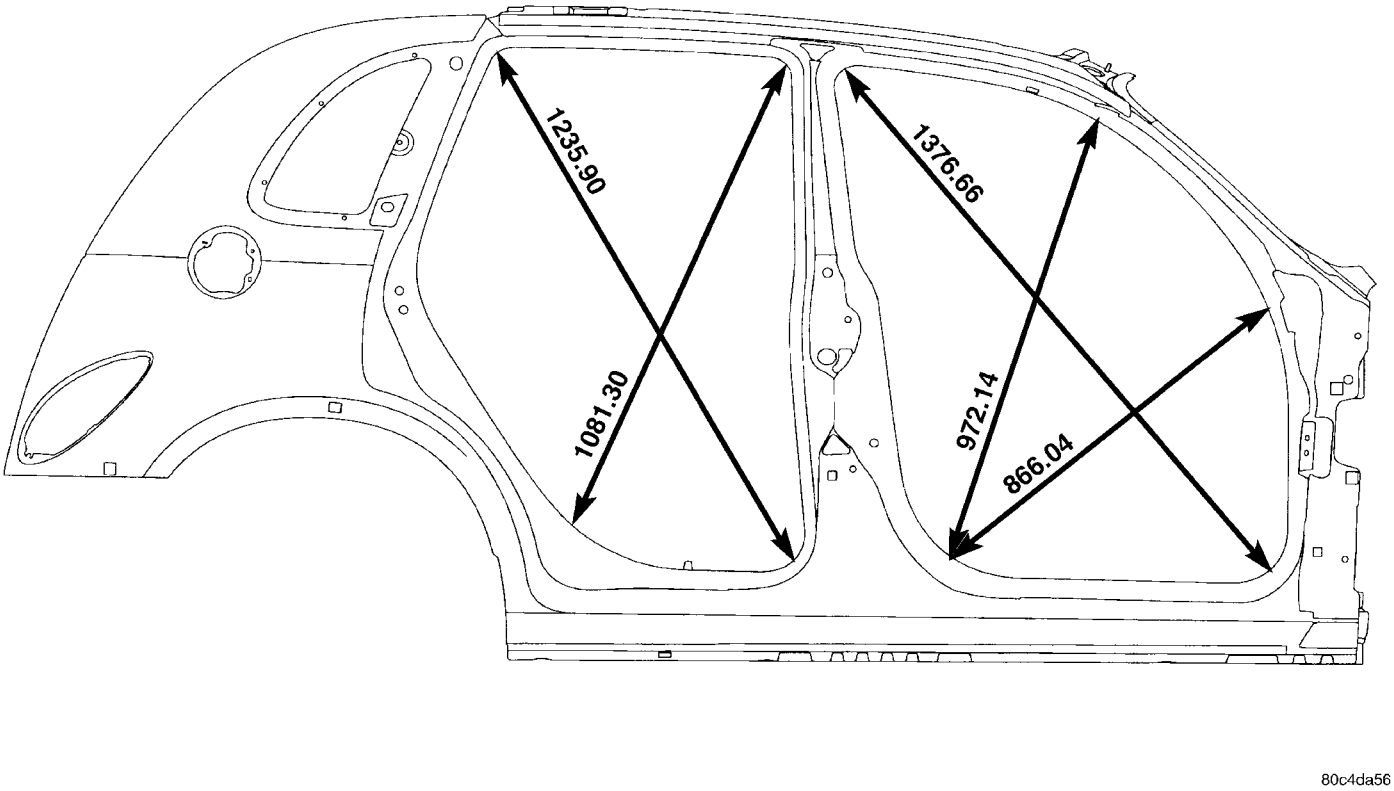

Fig. 10 FRONT AND REAR DOOR OPENING DIMENSIONS

FRAME (Continued)

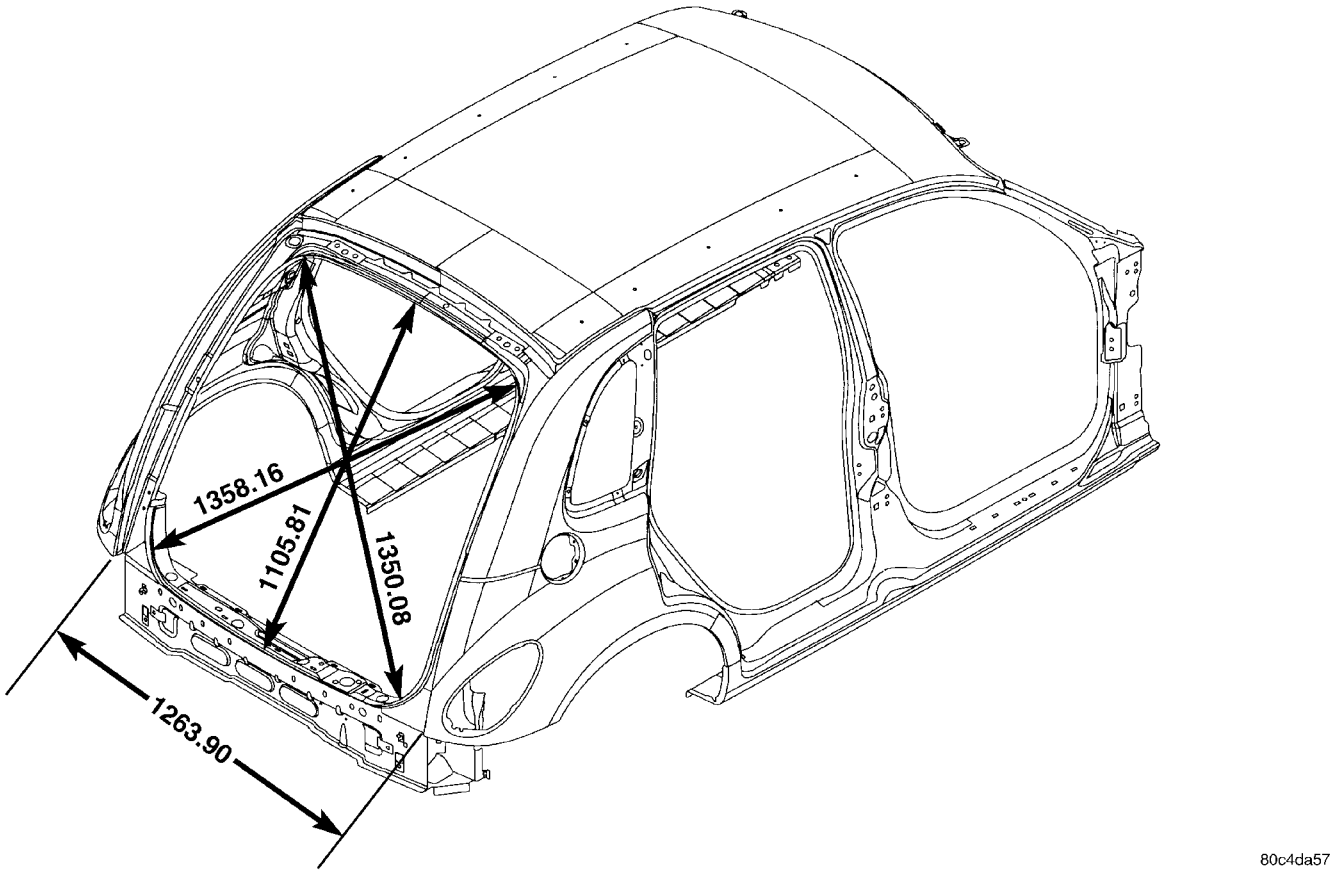

Fig. 11 REAR LIFTGATE OPENING DIMENSIONS

SPECIFICATIONS - TORQUE

DESCRIPTION	N·m	Ft. Lbs.	In. Lbs.
Rear Emergency Tow Eye - Bolts	75-115 N·m	55-85 ft. lbs.	—

FRONT CROSSMEMBER

REMOVAL

CAUTION: If the front suspension crossmember is being replaced due to collision damage, inspect the steering column lower coupling for damage. Refer to STEERING COLUMN in the STEERING section for the procedure.

(1) Raise the vehicle. Refer to HOISTING in the LUBRICATION AND MAINTENANCE area in this service manual for the correct lifting procedure.

(2) Remove both front tire and wheel assemblies from the vehicle.

(3) Remove both stabilizer bar links from the vehicle (Fig. 12) . Remove each link by holding the upper retainer/nut with a wrench and turning the link bolt.

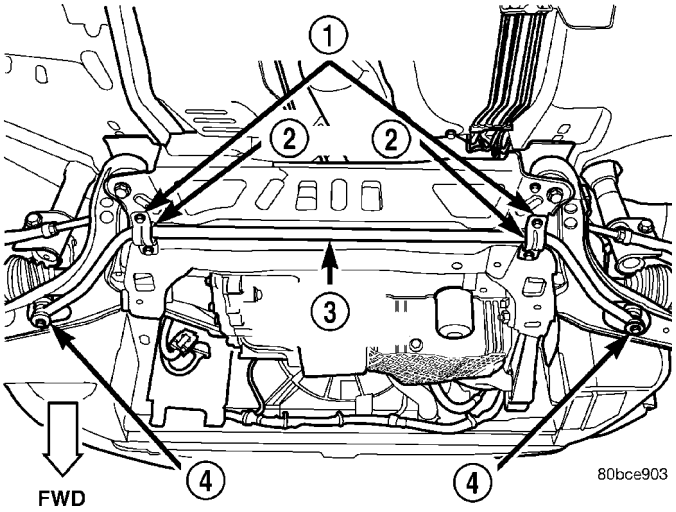

Fig. 12 Stabilizer Bar

1 - STABILIZER BAR CUSHION RETAINERS
2 - CUSHIONS
3 - FRONT STABILIZER BAR
4 - STABILIZER BAR LINKS

(4) Remove the stabilizer bar cushion retainer bolts and retainers (Fig. 12) , and remove the stabilizer bar with cushions attached from the vehicle.

(5) Remove the nut and pinch bolt clamping each ball joint stud to the steering knuckle (Fig. 13) .

CAUTION: After removing the steering knuckle from the ball joint stud, do not pull outward on the knuckle. Pulling the steering knuckle outward at this point can separate the inner C/V joint on the driveshaft. Refer to FRONT DRIVESHAFTS in the DIFFERENTIAL AND DRIVELINE area for further information.

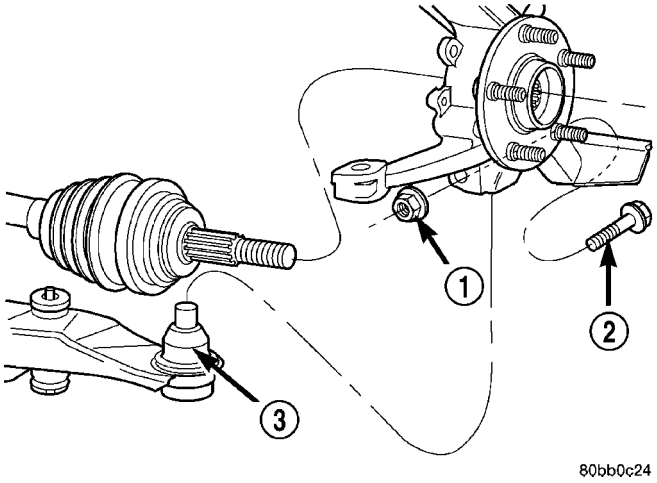

Fig. 13 Ball Joint Bolt And Nut

1 - NUT
2 - BOLT
3 - BALL JOINT

NOTE: Use caution when separating the ball joint stud from the steering knuckle, so the ball joint seal does not get cut.

(6) Separate each ball joint stud from the steering knuckle by prying down on lower control arm and up against the ball joint boss on the steering knuckle (Fig. 14) .

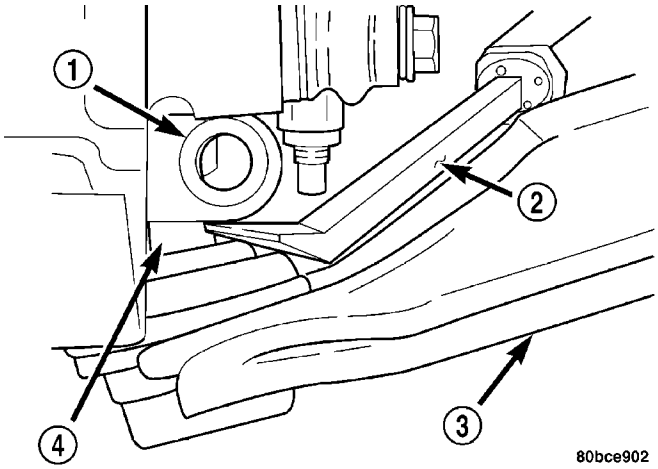

Fig. 14 Pry Bar Usage

1 - STEERING KNUCKLE
2 - PRY BAR
3 - LOWER CONTROL ARM
4 - BALL JOINT STUD

(7) Remove the two screws securing the cooler to the front suspension crossmember. They are located behind the cooler and can be accessed from above. Allow the cooler to hang out of the way.

FRONT CROSSMEMBER (Continued)

(8) Using wire or a bungee cord, support and tie off the power steering gear to the underbody of the vehicle, so when the crossmember is lowered, the gear does not fall away, being held to the vehicle by only the steering column coupling and the fluid hoses.

(9) Loosen and remove the four bolts attaching the power steering gear to the front suspension crossmember (Fig. 15) . Remove the power steering gear from the front suspension crossmember.

(10) Remove the pencil strut from the right front corner of the crossmember and body of the vehicle. (Fig. 16) . Remove the washer behind the strut from the torque strut bolt.

(11) Remove the screws fastening the front fascia to the reinforcement as necessary in order to access the drive-belt splash shield forward fastener screw (Fig. 17) .

(12) Remove the drive-belt splash shield fasteners (Fig. 17) . Remove the shield.

(13) Remove the bolt mounting the engine torque strut to the right forward corner of the front suspension crossmember (Fig. 16) .

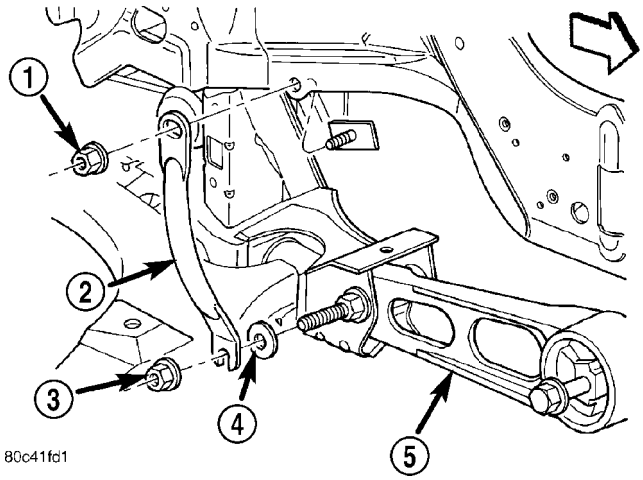

Fig. 16 Strut Mounting

1 - NUT
2 - PENCIL STRUT
3 - NUT
4 - FLAT WASHER
5 - LOWER TORQUE STRUT

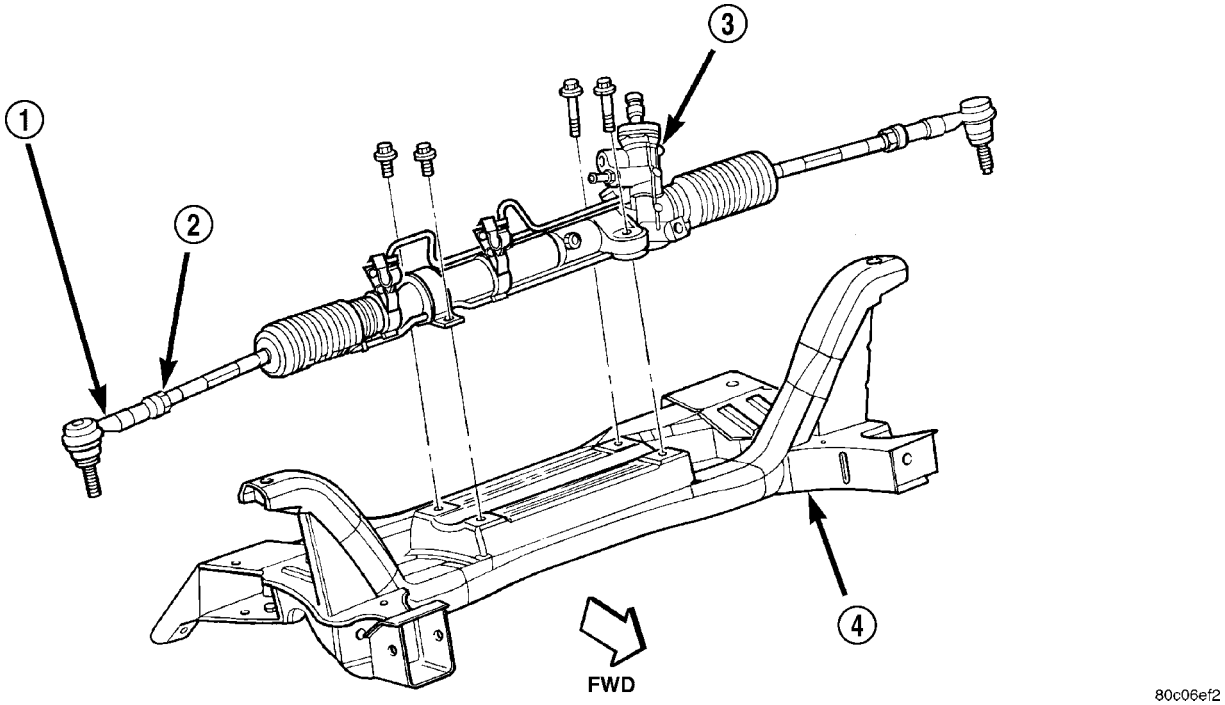

Fig. 15 Steering Gear

1 - OUTER TIE ROD
2 - JAM NUT
3 - STEERING GEAR
4 - FRONT SUSPENSION CROSSMEMBER

FRONT CROSSMEMBER (Continued)

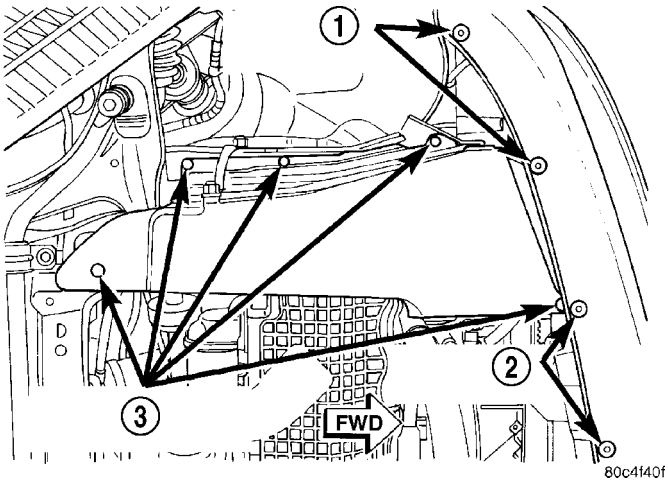

Fig. 17 Fascia And Splash Shield Fasteners

1 - FASCIA FASTENERS
2 - FASCIA FASTENERS
3 - SPLASH SHIELD FASTENERS

NOTE: Before removing the front suspension crossmember from the vehicle, the location of the crossmember must be scribed on the body of the vehicle. Do this so that the crossmember can be relocated upon reinstallation against the body of vehicle in the same location as before removal. If the front suspension crossmember is not reinstalled in exactly the same location as before removal, the preset front wheel alignment settings (caster and camber) will be lost.

(14) Using an awl, scribe a line marking the location of the front suspension crossmember where it is mounted against the body of the vehicle (Fig. 18) .

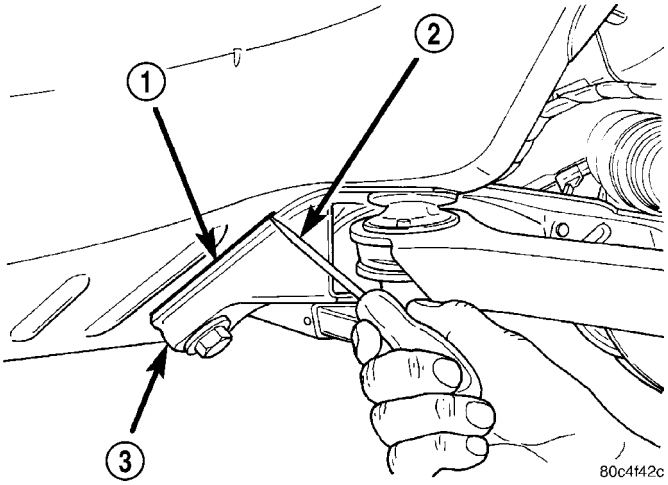

Fig. 18 Marking Crossmember Location

1 - SCRIBED LINE
2 - AWL
3 - CROSSMEMBER

(15) Position a transmission jack under the center of the front suspension crossmember and raise it to support the bottom of the crossmember.

(16) Loosen all six bolts attaching the front suspension crossmember and lower control arms to the body of the vehicle. Do not completely remove the two bolts going through the lower control arm rear isolator bushings. They are designed to disengage from the body threads yet stay within the lower control arm rear isolator bushing. Back the two bolts out just enough to disengage the tapping plates in the body of the vehicle. Completely remove the other four bolts.

(17) Lower the front suspension crossmember.

(18) Remove each lower control arm from the crossmember by removing the pivot bolts.

INSTALLATION

CAUTION: If the front suspension crossmember is being replaced due to collision damage, inspect the steering column lower coupling for damage. Refer to STEERING COLUMN in the STEERING section for the procedure.

(1) Install the lower control arms on the front suspension crossmember. Install the pivot bolts, but do not completely tighten them at this time.

(2) Using the transmission jack, raise the front suspension crossmember and lower control arms until the crossmember contacts its mounting spot against the body and frame rails of the vehicle. As the crossmember is raised, carefully guide the power steering gear into mounting position.

(3) Start the two crossmember mounting bolts through the lower control arm rear isolator bushings into the tapping plates mounted in the body. Next, install the two front and the two rear mounting bolts attaching front suspension crossmember to frame rails of vehicle. Lightly tighten all six mounting bolts to approximately 2 N·m (20 in. lbs.) to hold the front suspension crossmember in position at this time.

NOTE: When reinstalling the front suspension crossmember back in the vehicle, it is very important that the crossmember be attached to the body in exactly the same spot as when it was removed. Otherwise, the vehicle's wheel alignment settings (caster and camber) will be lost.

(4) Using a soft face hammer, tap the front suspension crossmember back-and-forth or side-to-side until it is aligned with the previously scribed positioning marks on the body of the vehicle (Fig. 18) . Once the front suspension crossmember is correctly positioned, tighten the two crossmember mounting bolts through the lower control arm rear isolator bushings to a

FRONT CROSSMEMBER (Continued)

torque of 250 N·m (185 ft. lbs.), then tighten the four remaining crossmember mounting bolts to a torque of 153 N·m (120 ft. lbs.).

(5) Tighten the lower control arm front pivot bolts to a torque of 163 N·m (120 ft. lbs.).

(6) Remove the wire or bungee cord suspending the power steering gear to the underbody.

(7) Attach the steering gear to the front suspension crossmember (Fig. 15) . Install the four power steering gear mounting bolts. Tighten the mounting bolts to a torque of 61 N·m (45 ft. lbs.).

(8) Install the two screws securing the cooler to the front suspension crossmember. They are located behind the cooler.

(9) Install each ball joint stud into the steering knuckle aligning the bolt hole in the knuckle boss with the notch formed in the side of the ball joint stud.

(10) Install a new ball joint stud pinch bolt and nut (Fig. 13) . Tighten the nut to a torque of 95 N·m (70 ft. lbs.).

(11) Fasten the engine torque strut to the right forward corner of the front suspension crossmember using its mounting bolt (Fig. 16) . Follow the procedure described in the ENGINE service manual area to properly align and tighten the torque strut and it's mounting bolts.

(12) Install the washer on the end of the stud extending from the torque strut bolt (Fig. 16) .

(13) Install the pencil strut to the right front corner of the crossmember and body of the vehicle (Fig. 16) . Tighten the pencil strut nuts to a torque of 58 N·m (43 ft. lbs.).

(14) Install the drive-belt splash shield and fasteners (Fig. 17) .

(15) Install the screws fastening the front fascia to the reinforcement (Fig. 17) .

NOTE: Before installing the stabilizer bar, make sure the bar is not upside-down. The stabilizer bar must be installed with the curve on the outboard ends of the bar facing downward to clear the control arms once fully installed (Fig. 19) .

(16) First, place the stabilizer bar in position on the front suspension crossmember. The slits in each cushion must point toward the front of the vehicle and sit directly on top of the raised beads formed into the stamping on the crossmember. Next, install the cushion retainers, matching the raised beads formed into the cushion retainers to the grooves formed into the cushions. Install the cushion retainer bolts, but do not completely tighten them at this time.

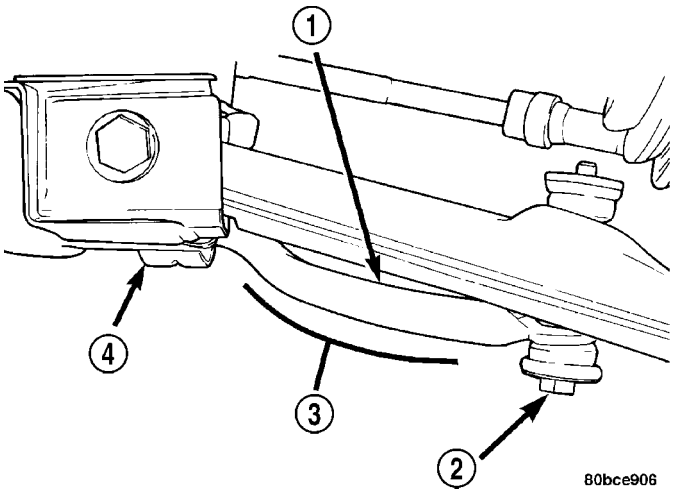

Fig. 19 Downward Curve

1 - STABILIZER BAR
2 - LINK
3 - DOWNWARD CURVE
4 - CUSHION RETAINER

(17) Install both stabilizer bar links back on vehicle (Fig. 12) . Start each stabilizer bar link bolt with bushing from the bottom, through the stabilizer bar, inner link bushings, lower control arm, and into the upper retainer/nut and bushing. Do not fully tighten the link assemblies at this time.

(18) Install the tire and wheel assemblies back on vehicle. Tighten the wheel mounting nuts to 135 N·m (100 ft. lbs.) torque.

(19) Lower the vehicle.

NOTE: It may be necessary to put the vehicle on a platform hoist or alignment rack to gain access to the stabilizer bar mounting bolts with the vehicle at curb height.

(20) Tighten each stabilizer bar link by holding the upper retainer/nut with a wrench and turning the link bolt. Tighten each link bolt to a torque of 28 N·m (250 in. lbs.).

(21) Tighten the stabilizer bar cushion retainer bolts to a torque of 28 N·m (250 in. lbs.).

(22) Check the front wheel alignment on the vehicle. Refer to WHEEL ALIGNMENT in the SUSPENSION service manual area.

FRONT EMERGENCY TOW EYE

REMOVAL

(1) The front tow eye contains left hand threads, simply unthread the tow eye from the tow eye bracket (Fig. 20).

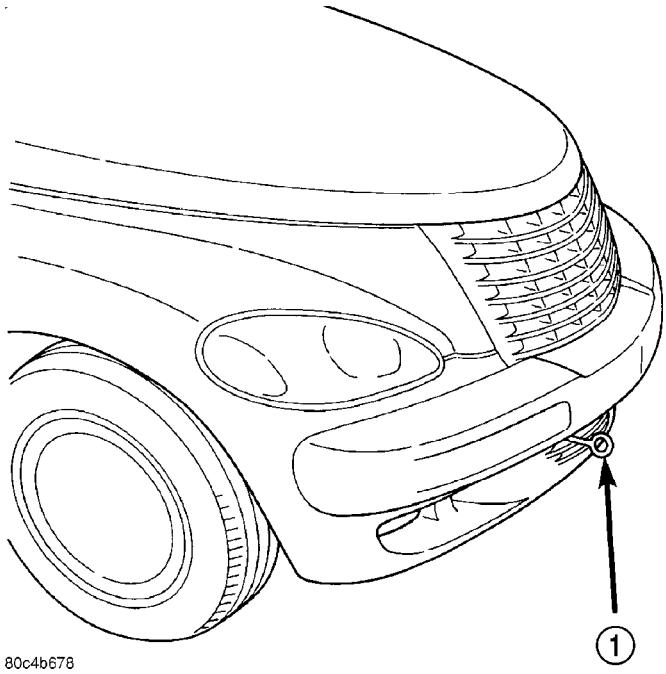

Fig. 20 Emergency Front Tow Eye

1 - FRONT TOW EYE

INSTALLATION

(1) Lubricate the threads and install the front tow eye in the front tow eye bracket. Tighten tow eye until firmly seated against bracket (Fig. 21). No torque specification is required.

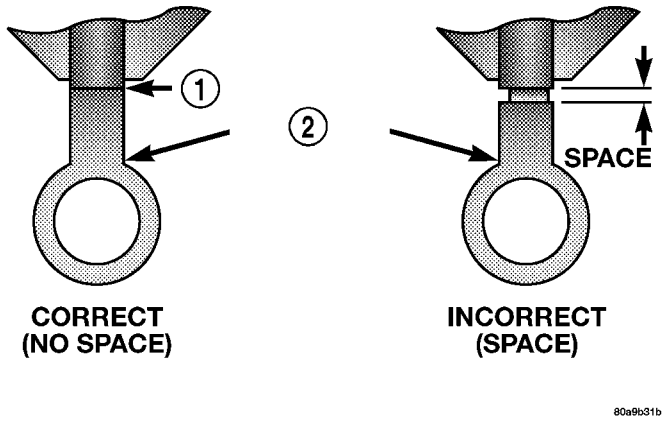

Fig. 21 Front Tow Eye Installation

1 - NO SPACE
2 - TOW HOOK

REAR EMERGENCY TOW EYE

REMOVAL

(1) Raise the vehicle on hoist. Refer to Group 0, Lubrication and Maintenance for lifting procedure.

(2) Remove the bolts holding rear tow eye to rear frame rail (Fig. 22).

INSTALLATION

(1) Position rear tow eye on vehicle (Fig. 22).

(2) Install bolts to hold rear tow eye bracket to rear frame rail. Torque bolts to 75–115 N·m (55–85 ft. lbs.).

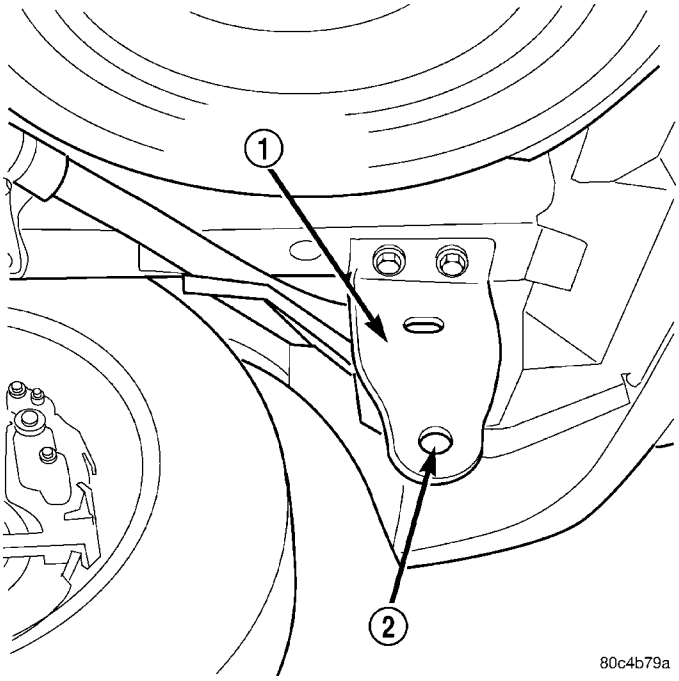

Fig. 22 Rear Tow Eye

1 - REAR TOW EYE BRACKET
2 - REAR TOW EYE

(3) Lower the vehicle from hoist.

FUEL SYSTEM

TABLE OF CONTENTS

page

FUEL DELIVERY 1

page

FUEL INJECTION 20

FUEL DELIVERY

TABLE OF CONTENTS

page

FUEL DELIVERY
DESCRIPTION 2
OPERATION 2
DIAGNOSIS AND TESTING - FUEL DELIVERY SYSTEM 2
STANDARD PROCEDURE
STANDARD PROCEDURE - FUEL SYSTEM PRESSURE RELEASE PROCEDURE 2
STANDARD PROCEDURE - DRAINING FUEL TANK 2
SPECIFICATIONS
TORQUE 3
FUEL SYSTEM PRESSURE 3
SPECIAL TOOLS
FUEL 3
FUEL FILTER
DESCRIPTION 4
FUEL LEVEL SENDING UNIT / SENSOR
DESCRIPTION 4
OPERATION 4
REMOVAL 4
INSTALLATION 5
FUEL LINES
DESCRIPTION - FUEL LINES/HOSES AND CLAMPS 5
STANDARD PROCEDURE - HOSES AND CLAMP 6
FUEL PRESSURE REGULATOR
DESCRIPTION 6
OPERATION 6
REMOVAL 6
INSTALLATION 7

page

FUEL PUMP
DESCRIPTION 7
OPERATION 7
FUEL PUMP MODULE
DESCRIPTION 7
OPERATION 7
REMOVAL 8
INSTALLATION 8
FUEL RAIL
DESCRIPTION 9
OPERATION 9
REMOVAL
REMOVAL 9
REMOVAL - 2.4L TURBO 10
REMOVAL - 1.6L 13
INSTALLATION
INSTALLATION 14
INSTALLATION - 2.4L TURBO 14
INSTALLATION - 1.6L 14
FUEL TANK
DESCRIPTION 14
OPERATION 14
REMOVAL 15
INSTALLATION 16
FUEL TANK FILLER TUBE
REMOVAL 16
INSTALLATION 17
INLET FILTER
DESCRIPTION 17
QUICK CONNECT FITTING
STANDARD PROCEDURE - QUICK-CONNECT FITTINGS 17

FUEL DELIVERY

DESCRIPTION

The front wheel drive car uses a plastic fuel tank located rear center of the vehicle.

The Fuel Delivery System consists of: the following items:

- Electric fuel pump module
- Fuel filter
- Tubes/lines/hoses
- Fuel injectors

The in-tank fuel pump module contains the fuel pump. The pump is serviced as part of the fuel pump module. Refer to Fuel Pump Module.

The fuel filter is not serviceable, it is mounted on the inside of the fuel tank in the fuel pump module.

OPERATION

The fuel system provides fuel pressure by an in-tank pump module. The PCM controls the operation of the fuel system by providing battery voltage to the fuel pump through the fuel pump relay. The PCM requires only three inputs and a good ground to operate the fuel pump relay. The three inputs are:

- Ignition voltage
- Crankshaft Position (CKP) sensor
- Camshaft Position (CMP) sensor

DIAGNOSIS AND TESTING - FUEL DELIVERY SYSTEM

(Refer to Appropriate Diagnostic Information)

STANDARD PROCEDURE

STANDARD PROCEDURE - FUEL SYSTEM PRESSURE RELEASE PROCEDURE

(1) Remove Fuel Pump relay from Power Distribution Center (PDC). For location of relay, refer to label on underside of PDC cover.

(2) Start and run engine until it stalls.

(3) Attempt restarting engine until it will no longer run.

(4) Turn ignition key to OFF position.

(5) Return fuel pump relay to PDC.

(6) One or more Diagnostic Trouble Codes (DTC's) may have been stored in PCM memory due to fuel pump relay removal. The DRB III® scan tool must be used to erase a DTC.

STANDARD PROCEDURE - DRAINING FUEL TANK

Two different procedures may be used to drain fuel tank (lowering tank or using DRB scan tool).

The quickest draining procedure involves lowering the fuel tank.

WARNING: RELEASE FUEL SYSTEM PRESSURE BEFORE SERVICING FUEL SYSTEM COMPONENTS. SERVICE VEHICLES IN WELL VENTILATED AREAS AND AVOID IGNITION SOURCES. NEVER SMOKE WHILE SERVICING THE VEHICLE.

As an alternative procedure, the electric fuel pump may be activated allowing tank to be drained at fuel rail connection. Refer to DRBIII® scan tool for fuel pump activation procedures. Before disconnecting fuel line at fuel rail, release fuel pressure. Refer to the Fuel System Pressure Release Procedure in this group for procedures. Disconnect the fuel line at the fuel rail and remove the plastic retainer from the fuel rail. Take plastic retainer and install it back into the fuel line from body. Attach end of special test hose tool number 8978 at fuel line connection from the body line. Position opposite end of this hose tool to an approved gasoline draining station. Activate fuel pump and drain tank until empty. When done remove the special test hose tool number 8978 from the body line. Remove the plastic retainer from the special test hose tool number 8978 and reinstall it into the fuel line from the body. Install the fuel line to the fuel rail.

If electric fuel pump is not operating, tank must be lowered for fuel draining. Refer to following procedures.

(1) Remove fuel filler cap.

(2) Perform the Fuel System Pressure Release procedure.

(3) Disconnect negative cable from battery.

(4) Raise vehicle and support.

(5) Certain models are equipped with a separate grounding wire (strap) connecting the fuel fill tube assembly to the body. Disconnect wire by removing screw.

(6) Open fuel fill door and remove screws mounting fuel filler tube assembly to body. Do not disconnect rubber fuel fill or vent hoses from tank at this time.

(7) Place a transmission jack under center of fuel tank. Apply a slight amount of pressure to fuel tank with transmission jack.

(8) Remove fuel tank mounting strap nuts from mounting strap studs.

(9) **Lower the tank just enough so that the filler tube fitting is the highest point of the fuel tank.**

(10) Remove filler tube from fuel tank. Tank will be drained through this fitting.

WARNING: WRAP SHOP TOWELS AROUND HOSES TO CATCH ANY GASOLINE SPILLAGE.

FUEL DELIVERY (Continued)

(11) Drain fuel tank into holding tank or a properly labeled **Gasoline** safety container.

CAUTION: GASOLINE OR GASOLINE VAPORS ARE HIGHLY FLAMMABLE. A FIRE COULD OCCUR IF AN IGNITION SOURCE IS PRESENT. NEVER DRAIN OR STORE GASOLINE OR DIESEL FUEL IN AN OPEN CONTAINER, DUE TO THE POSSIBILITY OF FIRE OR EXPLOSION.

(12) If fuel pump module removal is necessary, refer to Fuel Pump Module Removal/Installation in this section.

SPECIFICATIONS

TORQUE

DESCRIPTION	N·m	Ft. Lbs.	In. Lbs.
Accelerator Pedal to Dash Nuts	12	8.8	105
Fuel Pump Module Locknut	74.5	55	
Fuel Tank Strap Bolts	22.5	16.6	200
Fuel Rail Bolts	22.5	16.6	200
Ignition Coil Mounting Bolts	11	8.1	95

FUEL SYSTEM PRESSURE

400 kpa ±34 kpa (58 psi ± 5 psi)

SPECIAL TOOLS

FUEL

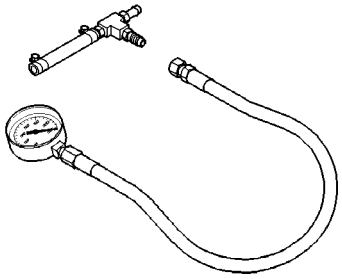

Pressure Gauge Assembly C–4799–B

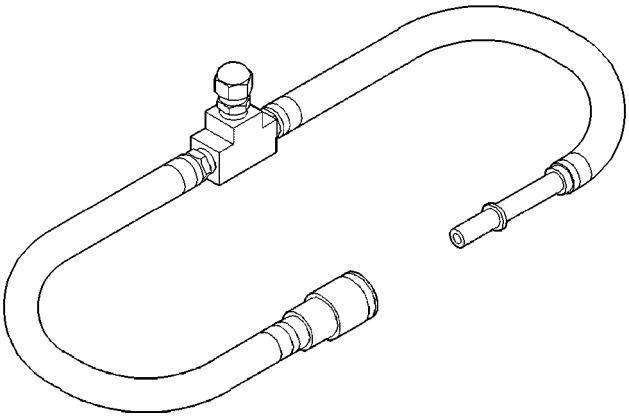

Fuel Pressure Test Adapter 6539

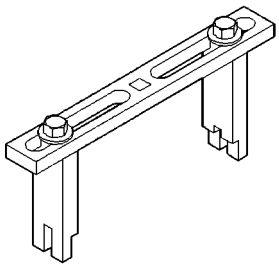

Spanner Wrench 6856

FUEL DELIVERY (Continued)

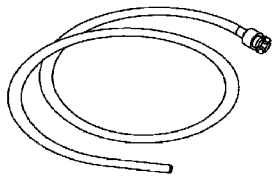

Fuel Line Adapter 1/4

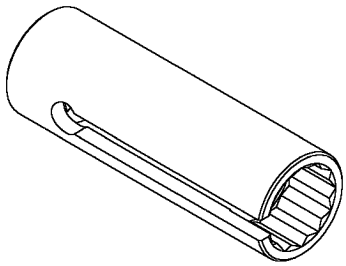

O2S (Oxygen Sensor) Remover/Installer—C-4907

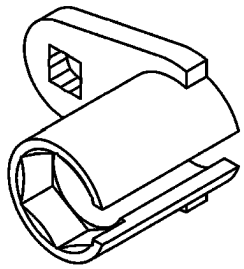

O2S (Oxygen Sensor) Remover/Installer - 8439

FUEL FILTER

DESCRIPTION

The fuel filter mounts inside the fuel pump module and is a non-serviceable part.

FUEL LEVEL SENDING UNIT / SENSOR

DESCRIPTION

The fuel gauge level sending unit is attached to the side of fuel pump module. The level sensor is a variable resistor.

OPERATION

Its resistance changes with the amount of fuel in the tank. The float arm attached to the sensor moves as the fuel level changes.

The fuel level input is used as an input for OBD II. If the fuel level is below 15% or above 85% of total tank capacity several monitors are disabled. There are diagnostics for the level circuit open and shorted.

REMOVAL

(1) Remove fuel pump module. Refer to Fuel Pump Module in this section.

(2) Depress retaining tab and remove the fuel pump/level sensor connector from the **BOTTOM** of the fuel pump module electrical connector (Fig. 1) .

NOTE: The pump module harness on TOP of flange is not serviceable or removable.

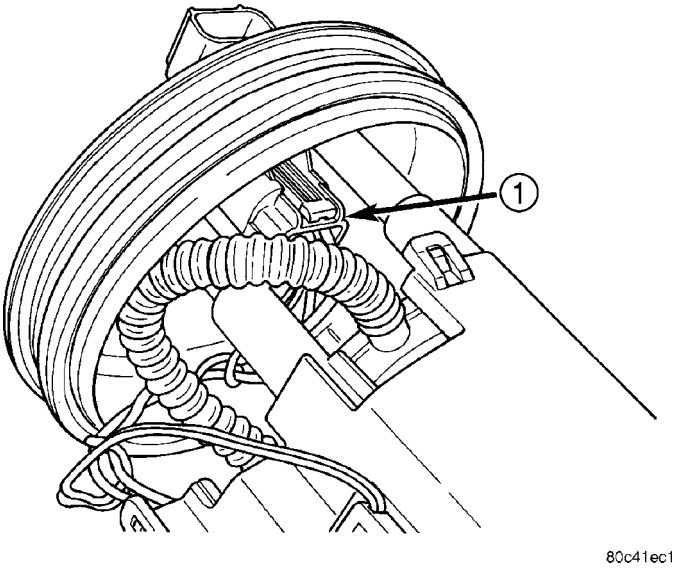

Fig. 1 Fuel Pump/Level Sensor Electrical Connector

1 - ELECTRICAL CONNECTOR

(3) Remove the wedge lock from the electrical connector (Fig. 2) .

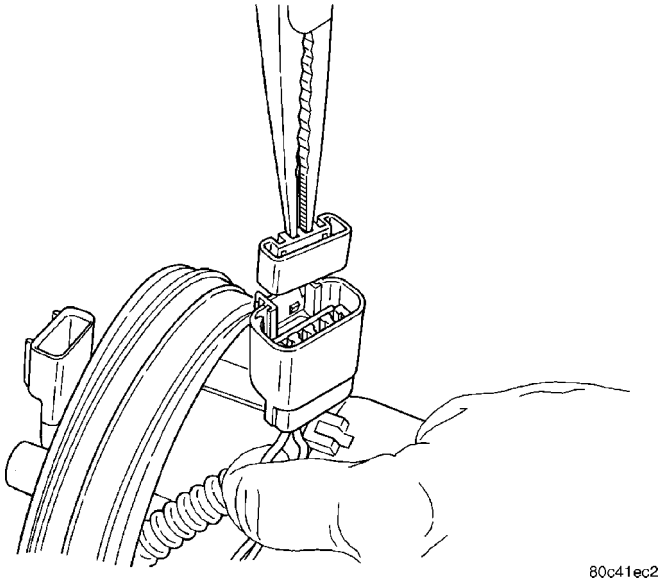

Fig. 2 Wedge Lock

FUEL LEVEL SENDING UNIT / SENSOR (Continued)

(4) Using Special Tool C-4334 terminal remover or equivalent, remove terminals from level sensor connector (Fig. 3) .

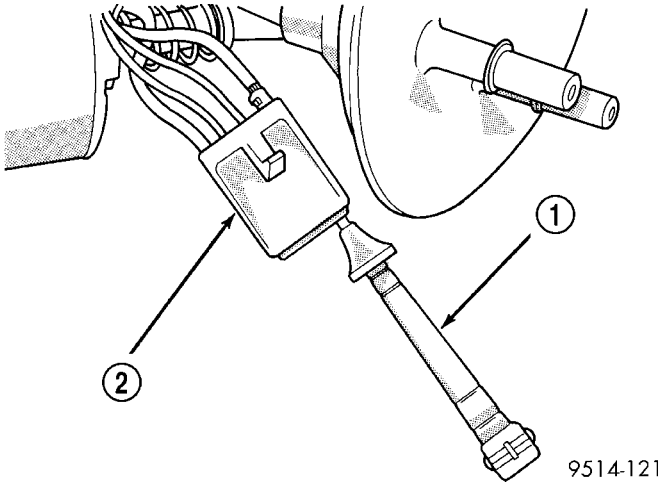

Fig. 3 Terminal Removal Tool-Tyipcal

1 - TERMINAL REMOVAL TOOL
2 - FUEL LEVEL SENSOR CONNECTOR

(5) Depress the tab and slide the sensor toward the bottom of the fuel pump module (Fig. 4) .

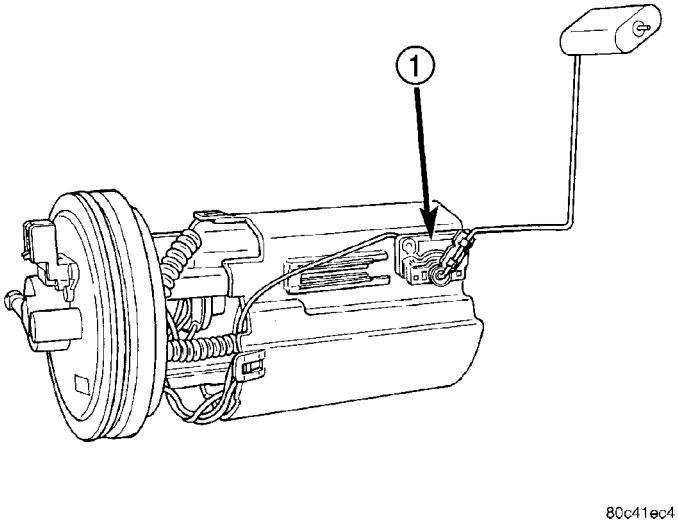

Fig. 4 Level Sensor

1 - FUEL LEVER SENSOR

(6) Slide level sensor out of channel in module.

INSTALLATION

(1) Wrap wires into groove in back of level sensor (Fig. 5) .

(2) While feeding wires into guide grooves, slide level sensor up into channel until it snaps into place (Fig. 4) . Ensure tab at bottom of sensor locks in place.

(3) Install level sensor wires in connector. Push the wires up through the connector and then pull them down until they lock in place. Ensure signal and ground wires are installed in the correct position refer to the Wiring section.

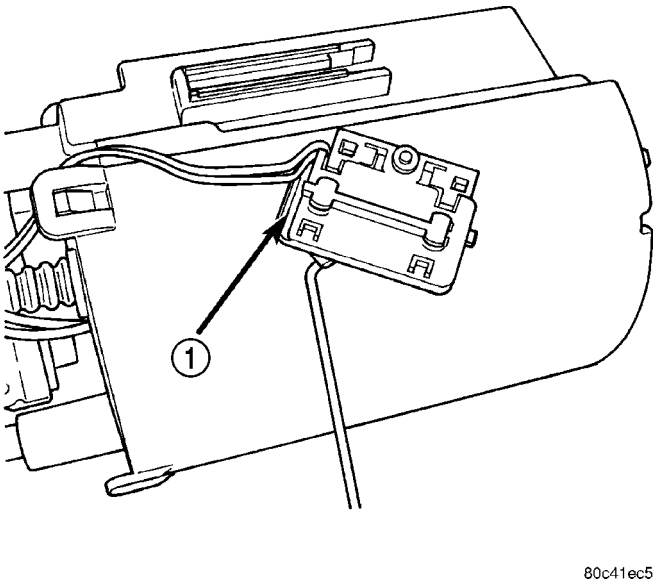

Fig. 5 Groove in Back Side of Level Sensor

1 - WIRING GROOVE

(4) Install locking wedge on connector (Fig. 2) .

(5) Push connector up into bottom of fuel pump module electrical connector (Fig. 1) .

(6) Install fuel pump module. Refer to Fuel Pump Module in this section.

FUEL LINES

DESCRIPTION - FUEL LINES/HOSES AND CLAMPS

Also refer to Quick-Connect Fittings.

WARNING: THE FUEL SYSTEM IS UNDER A CONSTANT PRESSURE (EVEN WITH THE ENGINE OFF). BEFORE SERVICING ANY FUEL SYSTEM HOSES, FITTINGS OR LINES, THE FUEL SYSTEM PRESSURE MUST BE RELEASED. REFER TO THE FUEL SYSTEM PRESSURE RELEASE PROCEDURE IN THIS GROUP.

The lines/tubes/hoses used on fuel injected vehicles are of a special construction. This is due to the higher fuel pressures and the possibility of contaminated fuel in this system. If it is necessary to replace these lines/tubes/hoses, only those marked EFM/EFI may be used.

If equipped: The hose clamps used to secure rubber hoses on fuel injected vehicles are of a special rolled edge construction. This construction is used to prevent the edge of the clamp from cutting into the hose. Only these rolled edge type clamps may be

FUEL LINES (Continued)

used in this system. All other types of clamps may cut into the hoses and cause high-pressure fuel leaks.

Use new original equipment type hose clamps.

STANDARD PROCEDURE - HOSES AND CLAMP

Inspect all hose connections (clamps and quick connect fittings) for completeness and leaks. Replace cracked, scuffed, or swelled hoses. Replace hoses that rub against other vehicle components or show sign of wear.

Fuel injected vehicles use specially constructed hoses. When replacing hoses, only use hoses marked EFM/EFI.

When installing hoses, ensure that they are routed away from contact with other vehicle components that could rub against them and cause failure. Avoid contact with clamps or other components that cause abrasions or scuffing. Ensure that rubber hoses are properly routed and avoid heat sources.

The hose clamps have rolled edges to prevent the clamp from cutting into the hose. Only use clamps that are original equipment or equivalent. Other types of clamps may cut into the hoses and cause high pressure fuel leaks. Tighten hose clamps to 1 N·m (10 in. lbs.) torque.

Inspect all hose connections such as clamps, couplings and fittings to make sure they are secure and leaks are not present. The component should be replaced immediately if there is any evidence of degradation that could result in failure.

Never attempt to repair a plastic fuel line/tube. Replace as necessary.

Avoid contact of any fuel tubes/hoses with other vehicle components that could cause abrasions or scuffing. Be sure that the plastic fuel lines/tubes are properly routed to prevent pinching and to avoid heat sources.

FUEL PRESSURE REGULATOR

DESCRIPTION

The fuel pressure regulator contains a diaphragm, calibrated spring and a fuel return valve. The regulator is mounted in the fuel pump module (Fig. 6) .

OPERATION

The fuel system uses a nonadjustable pressure regulator that maintains fuel system pressure at approximately 400 ±34 kPa (58 ±5 psi). The fuel pressure regulator contains a diaphragm, calibrated spring and a fuel return valve. The spring pushes down on the diaphragm and closes off the fuel return port. System fuel pressure reflects the amount of fuel pressure required to open the return port.

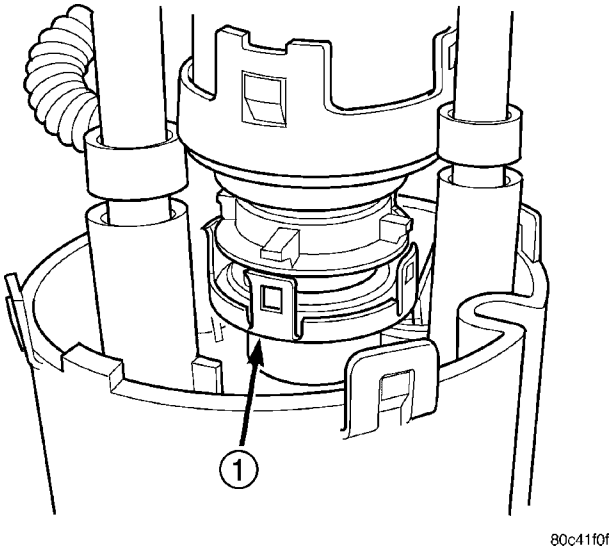

Fig. 6 Fuel Pressure Regulator

1 - FUEL PRESSURE REGULATOR

The pressure regulator is a mechanical device that is NOT controlled by the PCM or engine vacuum.

REMOVAL

The fuel pressure regulator is part of the fuel pump module (Fig. 7). Remove the fuel pump module from the fuel tank to access the fuel pressure regulator. Refer to the Fuel Pump Module removal in this section.

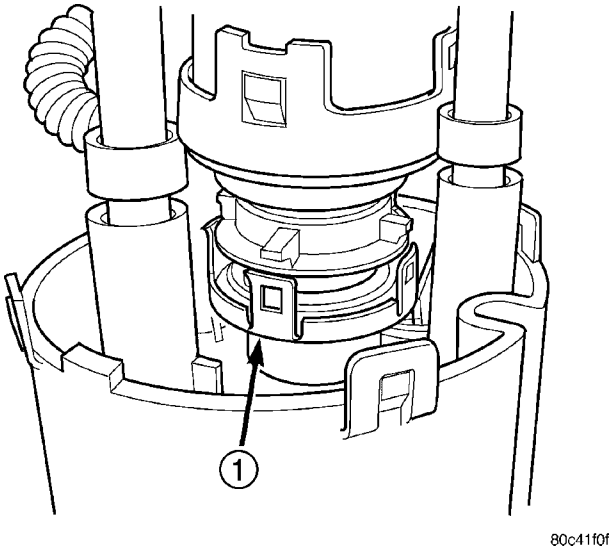

Fig. 7 Fuel Pressure Regulator Retainer

1 - FUEL PRESSURE REGULATOR

WARNING: FUEL SYSTEM PRESSURE MUST BE RELEASED BEFORE SERVICING ANY FUEL SYSTEM COMPONENT. PERFORM THE FUEL SYSTEM PRESSURE RELEASE PROCEDURE.

FUEL PRESSURE REGULATOR (Continued)

(1) Spread tangs on pressure regulator retainer (Fig. 7).

(2) Pry fuel pressure regulator out of housing.

(3) Ensure that the O-ring was removed with regulator (Fig. 8).

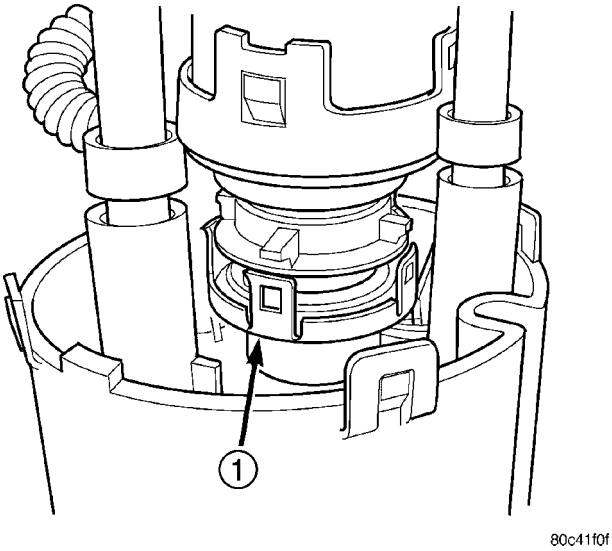

Fig. 8 Fuel Pressure Regulator Retainer

1 - FUEL PRESSURE REGULATOR

INSTALLATION

The fuel pressure regulator is part of the fuel pump module (Fig. 7) . Remove the fuel pump module from the fuel tank to access the fuel pressure regulator. Refer to the Fuel Pump Module removal in this section.

(1) Lightly lubricate the O-ring with clean engine oil and place them into opening in pump module.

(2) Push regulator into opening in pump module.

(3) Push regulator retainer over tabs on housing.

(4) Install Fuel Pump Module, refer to the Fuel Pump Module installation in this section.

FUEL PUMP

DESCRIPTION

The electric fuel pump is located in and is part of the fuel pump module. It is a positive displacement, gerotor type, immersible pump with a permanent magnet electric motor. The fuel pump module is suspended in fuel in the fuel tank.

OPERATION

The pump draws fuel through a strainer and pushes it through the motor to the outlet. The pump contains a check valve. The valve, in the pump outlet, maintains pump pressure during engine off conditions, for a short while. It is normal for fuel pressure to drop to zero after cooldown. The fuel pump relay provides voltage to the fuel pump. The fuel pump has a maximum deadheaded pressure output of approximately 880 kPa (130 psi). The regulator adjusts fuel system pressure to approximately 400 kpa ±34 kpa (58 psi ± 5 psi).

NOTE: Checkvalve maintains volume of fuel in the rail and lines, not pressure.

FUEL PUMP MODULE

DESCRIPTION

The fuel pump module is installed in the top of the fuel tank (Fig. 9).

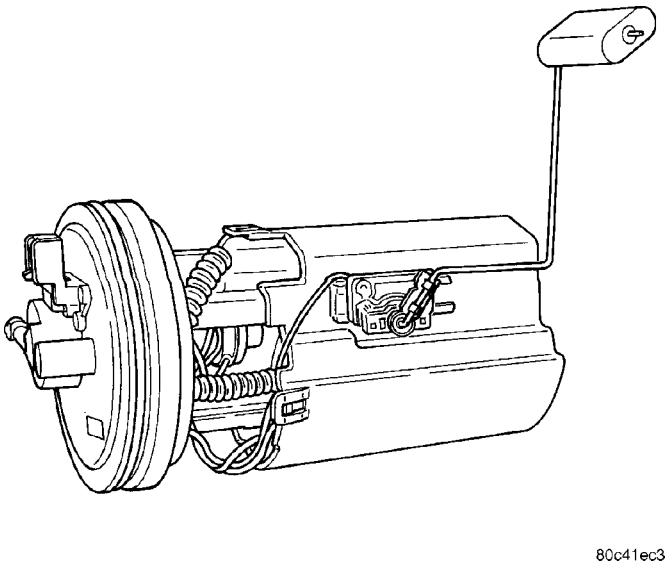

Fig. 9 Fuel Pump Module

The fuel pump module contains the following:

- Electric fuel pump
- Fuel pump reservoir
- Inlet strainer
- Fuel pressure regulator
- Fuel gauge sending unit
- Fuel supply line connection
- Fuel Filter

The fuel level sensor and the pressure regulator are the only serviceable items. If the fuel pump or electrical wiring harness requires service, replace the fuel pump module.

OPERATION

The pump draws fuel through a strainer and pushes it through the motor to the outlet. The pump contains one check valve. The check valve, in the pump outlet, maintains pump pressure during engine off conditions. The fuel pump relay provides voltage to the fuel pump.

FUEL PUMP MODULE (Continued)

The fuel pump has a maximum deadheaded pressure output of approximately 880 kPa (130 psi). The regulator adjusts fuel system pressure to approximately 400 ±34 kPa (58 ±5 psi).

FUEL PUMP ELECTRICAL CONTROL

Voltage to operate the electric pump is supplied through the fuel pump relay. For an electrical operational description of the fuel pump refer to fuel Pump Relay—PCM Output.

ELECTRICAL PUMP REPLACEMENT

The electric fuel pump is not serviceable. If the fuel pump or electrical wiring harness needs replacement, the complete fuel pump module must be replaced. Perform the Fuel System Pressure Release procedure before servicing the fuel pump.

REMOVAL

WARNING: RELEASE FUEL SYSTEM PRESSURE BEFORE SERVICING FUEL SYSTEM COMPONENTS. SERVICE VEHICLES IN WELL VENTILATED AREAS AND AVOID IGNITION SOURCES. NEVER SMOKE WHILE SERVICING THE VEHICLE.

(1) Remove fuel filler cap and perform Fuel System Pressure Release procedure.
(2) Remove the air cleaner lid, disconnect the inlet air temperature sensor and makeup air hose.
(3) Remove the negative battery cable.
(4) Raise vehicle and support.
(5) Remove fuel tank, refer to the Fuel Tank Removal in this section.
(6) Clean top of tank to remove loose dirt and debris.
(7) **Mark the fuel pump location on the top of the fuel tank.**

NOTE: The pump has to be properly located to the tank for the fuel gauge to work properly.

(8) Disconnect fuel filter lines from fuel pump module.
(9) Using Special Tool #6856 Fuel Pump Module Ring Spanner, remove locknut to release pump module (Fig. 10).

WARNING: THE FUEL RESERVOIR OF THE FUEL PUMP MODULE DOES NOT EMPTY OUT WHEN THE TANK IS DRAINED. THE FUEL IN THE RESERVOIR MAY SPILL OUT WHEN THE MODULE IS REMOVED.

(10) Remove fuel pump module and seal from tank. Discard seal.

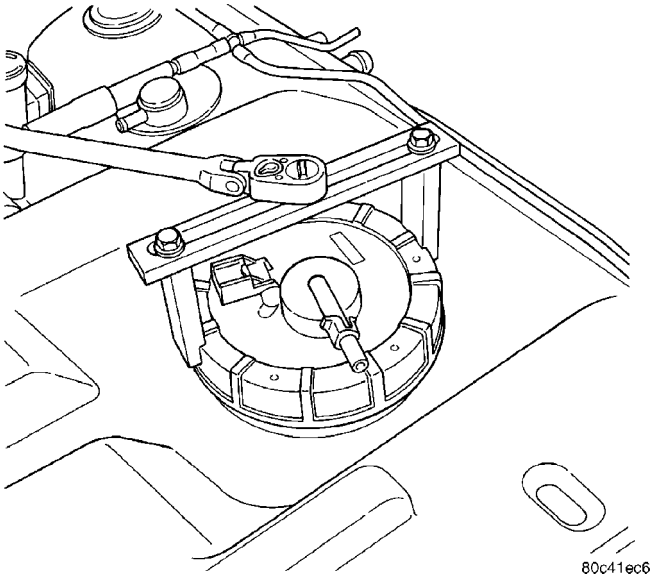

Fig. 10 Fuel Pump Module Locknut

INSTALLATION

WARNING: RELEASE FUEL SYSTEM PRESSURE BEFORE SERVICING FUEL SYSTEM COMPONENTS. SERVICE VEHICLES IN WELL VENTILATED AREAS AND AVOID IGNITION SOURCES. NEVER SMOKE WHILE SERVICING THE VEHICLE.

(1) Wipe seal area of tank clean. Place a new seal between the tank threads and the pump module opening.

NOTE: The pump has to properly located to the tank for the fuel gauge to work properly.

(2) Position fuel pump module in tank. Make sure the alignment marks line up on the fuel tank and pump module.

CAUTION: Over tightening the pump lock ring may result in a leak.

(3) While holding the pump module in position, install locknut. Tighten locknut to 74.5 N·m (55 ft. lbs) torque using special tool #6856.
(4) Install fuel tank, refer to the Fuel Tank Installation in this section.
(5) Lower vehicle.
(6) Install the negative battery cable.
(7) Install the air cleaner lid, connect the inlet air temperature sensor and makeup air hose.
(8) Fill fuel tank with clean fuel. Use the DRBIII® scan tool to pressurize the system and check for leaks.

FUEL RAIL

DESCRIPTION

The fuel rail supplies the necessary fuel to each individual fuel injector and is mounted to the intake manifold (Fig. 11) .

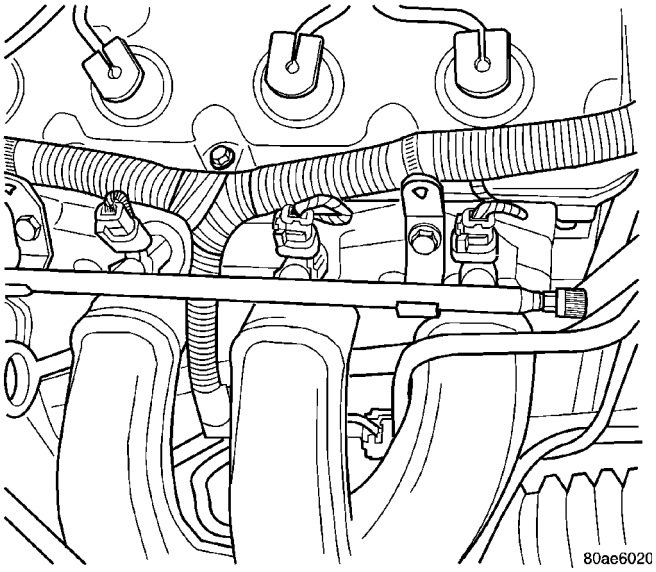

Fig. 11 Fuel Rail

OPERATION

The fuel pressure regulator is no longer mounted to the fuel rail on any engine. It is now located on the fuel tank mounted fuel pump module. Refer to Fuel Filter/Fuel Pressure Regulator in the Fuel Delivery System section of this group for information. The fuel rail is not repairable.

REMOVAL

REMOVAL

WARNING: RELEASE FUEL SYSTEM PRESSURE BEFORE SERVICING FUEL SYSTEM COMPONENTS. SERVICE VEHICLES IN WELL VENTILATED AREAS AND AVOID IGNITION SOURCES. NEVER SMOKE WHILE SERVICING THE VEHICLE.

(1) Release fuel system pressure. Refer to Fuel System Pressure Release procedure in this section.

(2) Remove the air cleaner lid, disconnect the inlet air temperature sensor and makeup air hose.

(3) Remove the negative battery cable.

(4) Remove the engine cover or throttle control shield if equipped.

WARNING: WRAP SHOP TOWELS AROUND HOSE TO CATCH ANY GASOLINE SPILLAGE.

(5) Disconnect fuel supply tube from rail. Refer to Quick-Connect Fittings in this section.

(6) Remove the Intake Manifold, refer to the Engine section.

(7) Disconnect electrical connectors from fuel injectors (Fig. 12) .

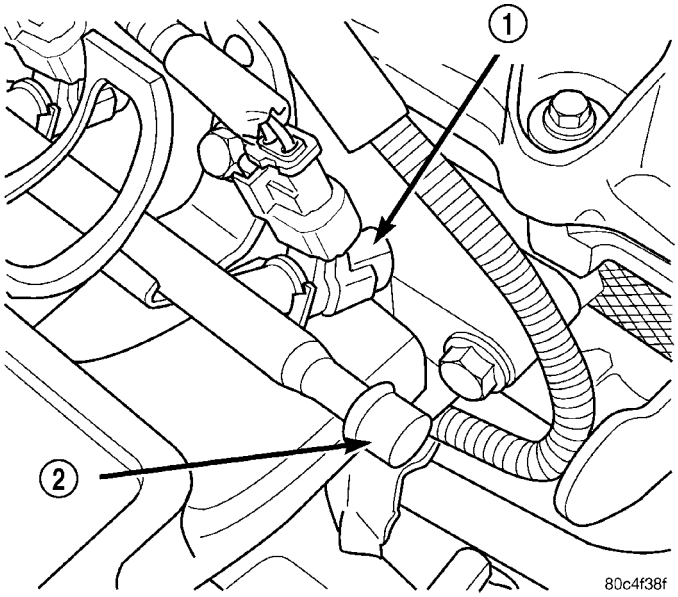

Fig. 12 Fuel Injector

1 - FUEL INJECTOR
2 - FUEL TEST PORT

(8) Remove bolts holding fuel rail (Fig. 13) .

(9) Remove the fuel rail and injectors.

(10) Remove the injectors from the fuel rail.

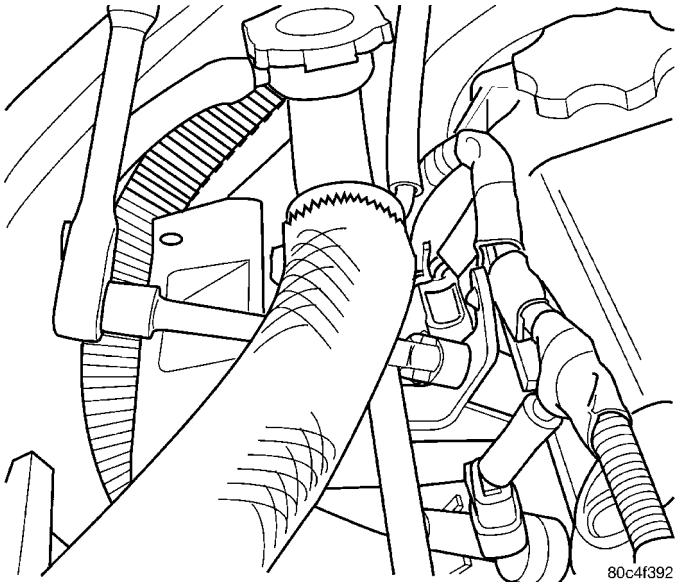

Fig. 13 Fuel Rail

FUEL RAIL (Continued)

REMOVAL - 2.4L TURBO

WARNING: RELEASE FUEL SYSTEM PRESSURE BEFORE SERVICING FUEL SYSTEM COMPONENTS. SERVICE VEHICLES IN WELL VENTILATED AREAS AND AVOID IGNITION SOURCES. NEVER SMOKE WHILE SERVICING THE VEHICLE.

(1) Release the fuel system pressure. Refer to Fuel System Pressure Release procedure in this section.

(2) Disconnect the negative battery cable.

(3) Disconnect the throttle body inlet hose (Fig. 14) and remove from throttle body.

(4) Disconnect the purge hose from the throttle body (Fig. 14).

(5) Unlock and disconnect the electrical connection at the throttle body (Fig. 14).

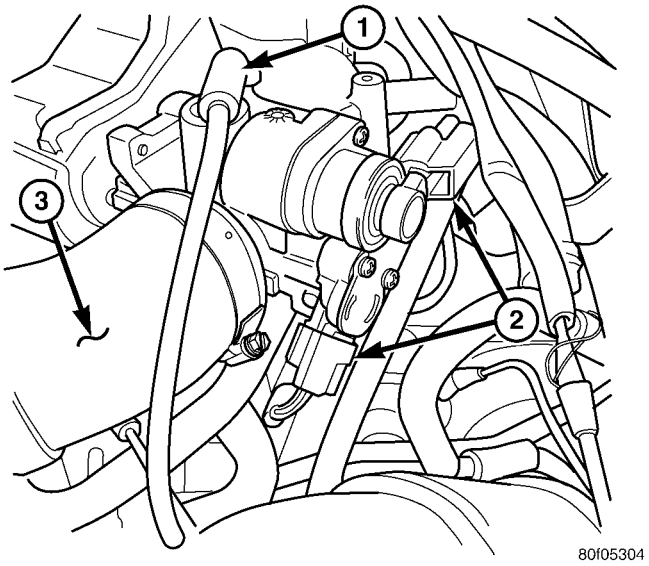

Fig. 14 THROTTLE BODY CONNECTIONS - 2.4L TURBO

1 - Purge Hose
2 - Electrical Connections
3 - Inlet Hose

(6) Remove the throttle control shield (Fig. 15).

(7) Remove the throttle and speed control cables from the throttle body.

(8) Remove the cables from the throttle body bracket.

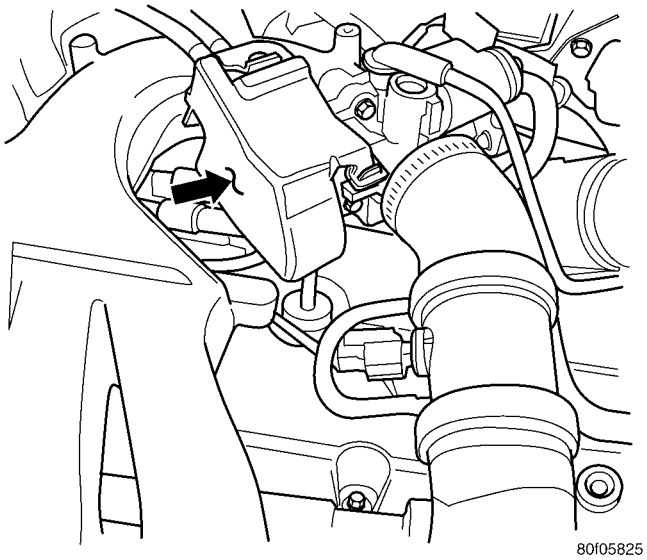

Fig. 15 THROTTLE CONTROL SHIELD - 2.4L TURBO

(9) Unlock and disconnect the MAP sensor electrical connector (Fig. 16).

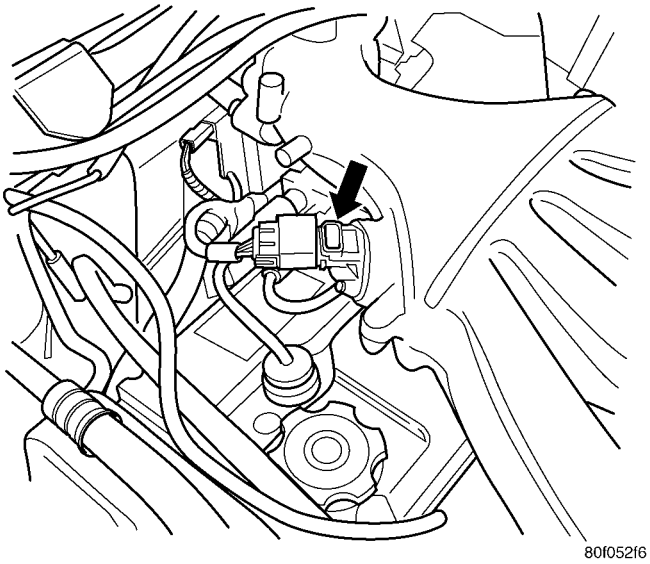

Fig. 16 MAP SENSOR - 2.4L TURBO

FUEL RAIL (Continued)

(10) Remove the vacuum lines from the rear of the intake manifold (Fig. 17).

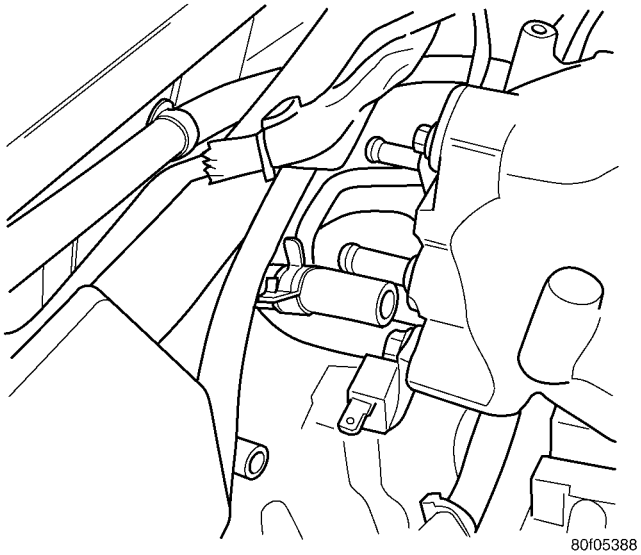

Fig. 17 VACUUM LINES - 2.4L TURBO

(11) Remove the 5 bolts from the front of the intake manifold.

(12) Remove the 2 bolts from the rear of the intake manifold (Fig. 17).

(13) Remove the intake manifold. Cover the lower intake manifold openings (Fig. 18).

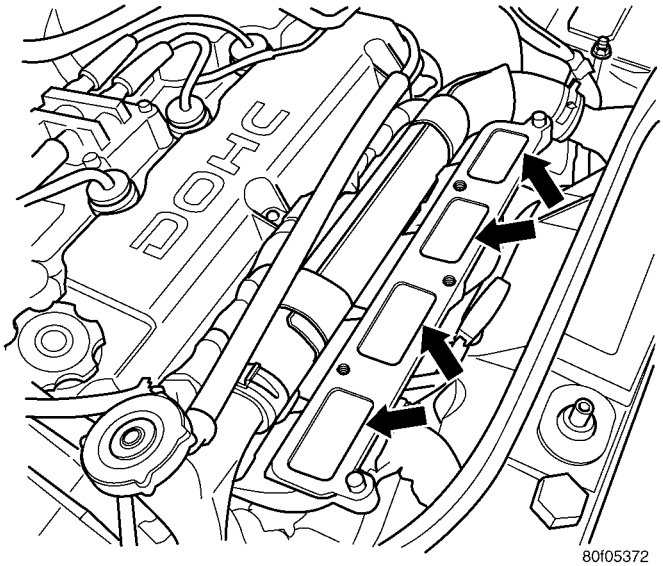

Fig. 18 LOWER INTAKE MANIFOLD - 2.4L TURBO

(14) Drain the Coolant system, refer to the Cooling section for more information.

(15) Move the upper radiator hose clamp (Fig. 19), so that the hose can be rotated up and out of the way.

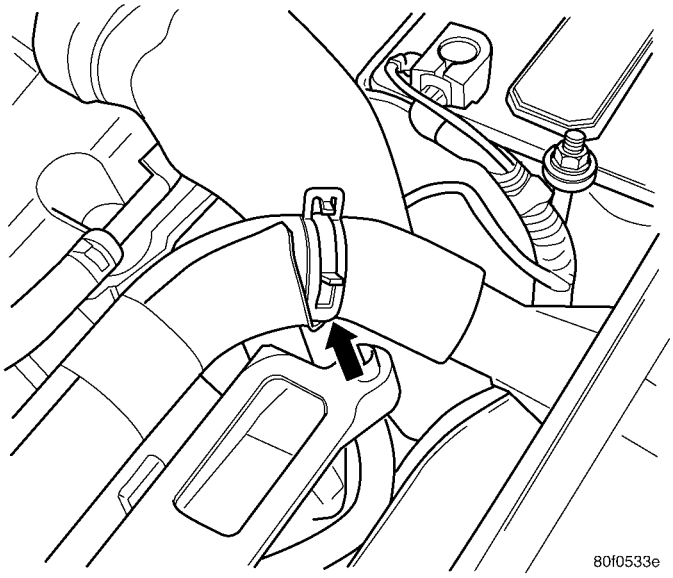

Fig. 19 UPPER RADIATOR HOSE CLAMP - 2.4L TURBO

(16) Remove the 2 small hoses from the thermostat housing (Fig. 20).

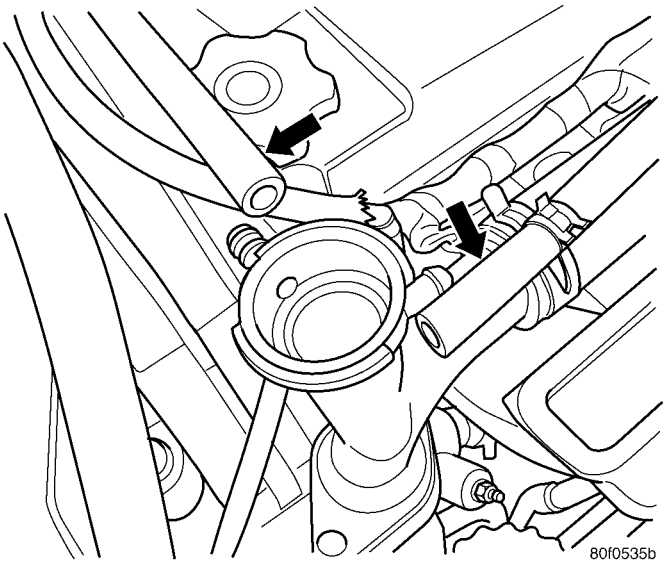

Fig. 20 SMALL HOSES AT HOUSING - 2.4L TURBO

FUEL RAIL (Continued)

(17) Remove the 2 bolts from the thermostat housing (Fig. 21)and rotate the assembly up and out of the way (Fig. 22).

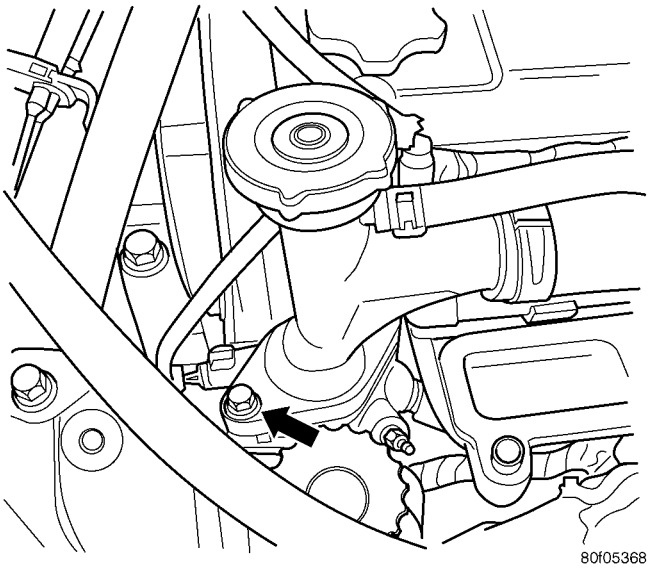

Fig. 21 THERMOSTAT HOUSING - 2.4L TURBO

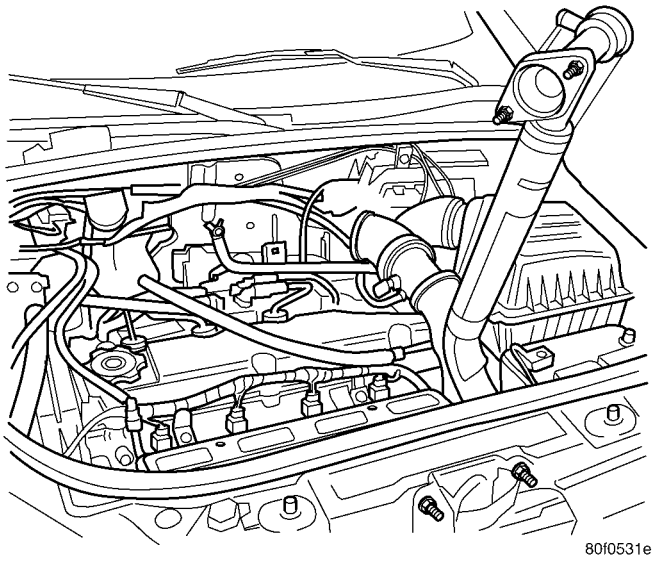

Fig. 22 HOSE AND HOUSING ROTATED - 2.4L TURBO

WARNING: WRAP SHOP TOWELS AROUND HOSE TO CATCH ANY GASOLINE SPILLAGE.

(18) Disconnect the fuel line from the fuel rail (Fig. 23). Refer to the Quick-Connect Fittings in this section.

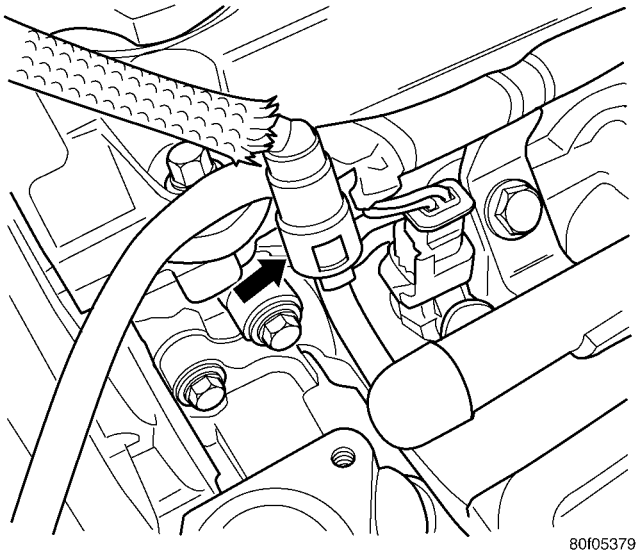

Fig. 23 FUEL LINE CONNECTION - 2.4L TURBO

(19) Unlock and disconnect the electrical connectors from the fuel injectors.

(20) Remove the wiring harness from the fuel rail (Fig. 24).

(21) Remove the 2 bolts from the fuel rail (Fig. 24).

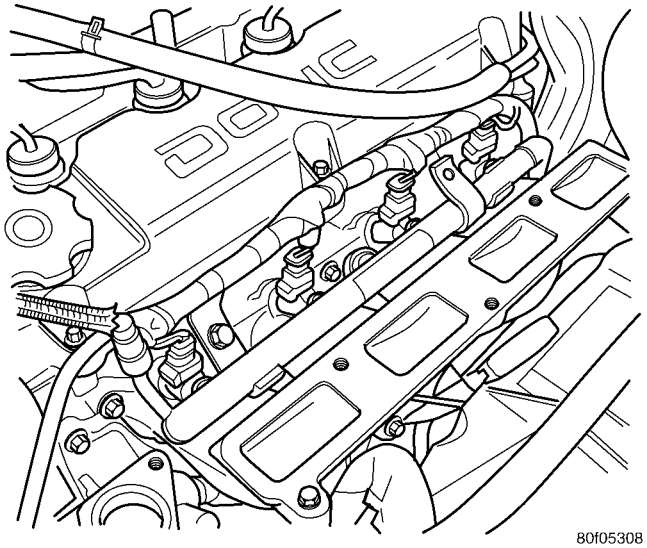

Fig. 24 FUEL RAIL - 2.4L TURBO

FUEL RAIL (Continued)

(22) Remove the fuel rail and injectors from the intake manifold (Fig. 25).

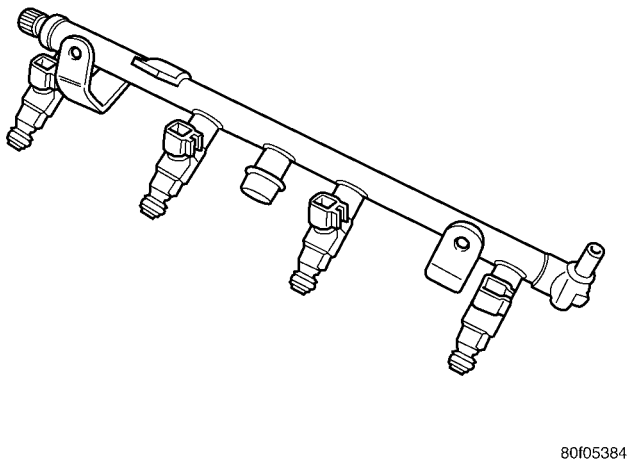

Fig. 25 FUEL RAIL & INJECTORS - 2.4L TURBO

REMOVAL - 1.6L

(1) Release the fuel pressure, refer to the fuel pressure release procedure.

(2) Remove air cleaner assembly cover.

(3) Disconnect the negative battery cable.

(4) Disconnect the electrical connectors from the fuel injectors (Fig. 26)

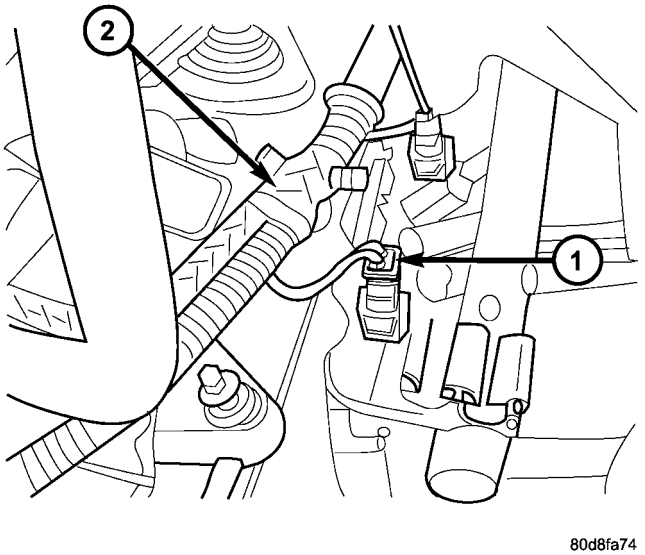

Fig. 26 INJECTOR CONNECTOR AND WIRING HARNESS

1 - FUEL INJECTOR ELECTRICAL CONNECTOR
2 - WIRING HARNESS

(5) Remove the wiring harness from the fuel rail brackets.

(6) Remove the fuel line from the fuel rail (Fig. 27).

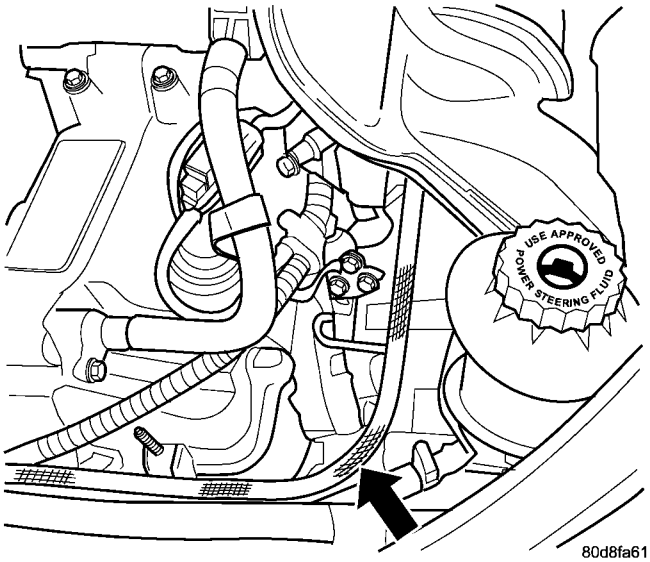

Fig. 27 FUEL LINE

(7) Remove the 2 bolts to the fuel rail at the lower manifold.

(8) Remove the fuel rail (Fig. 28)

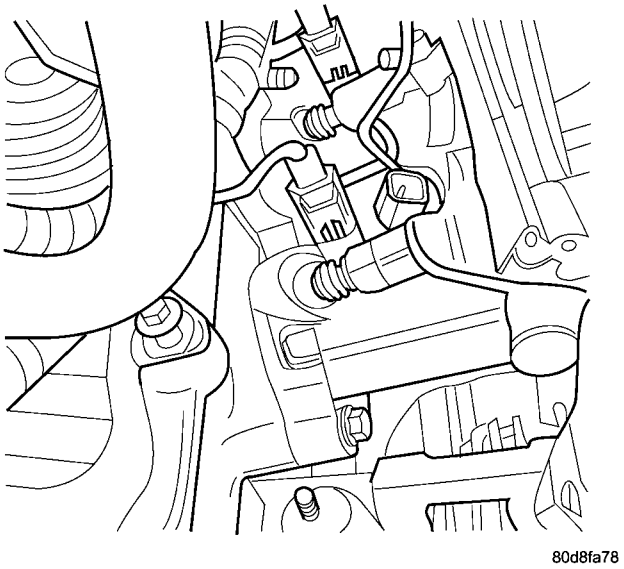

Fig. 28 FUEL RAIL AND FUEL INJECTOR

(9) Remove the fuel injectors from the rail.

FUEL RAIL (Continued)

INSTALLATION

INSTALLATION

(1) Install injectors to the fuel rail.

(2) Apply a light coating of clean engine oil to the O-ring on the nozzle end of each injector.

(3) Insert fuel injector nozzles into openings in intake manifold. Seat the injectors in place. Tighten fuel rail bolts to 22.5 ±3 N·m (200 ±30 in. lbs.) (Fig. 13).

(4) Attach electrical connectors to fuel injectors.

(5) Connect fuel supply tube to fuel rail. Refer to Quick Connect Fittings in the Fuel Delivery section

(6) Install Intake Manifold, refer to the Engine section.

(7) Install the engine cover or throttle control shield if equipped.

(8) Install the negative battery cable.

(9) Install the air cleaner lid, connect the inlet air temperature sensor and makeup air hose. Tighten air inlet tube clamps to 3 N·m ±1 (25 in. lbs. ±5) torque.

INSTALLATION - 2.4L TURBO

(1) Install the fuel injectors to the fuel rail (Fig. 25).

(2) Apply a light coating of clean engine oil to the O-ring on the nozzle end of each injector.

(3) Insert fuel injector nozzles into openings in intake manifold. Seat the injectors in place.

(4) Install the 2 bolts to the fuel rail (Fig. 24). Tighten fuel rail bolts to 22.5 ±3 N·m (200 ±30 in. lbs.)

(5) Install the wiring harness to the fuel rail (Fig. 24).

(6) Connect and lock the electrical connectors to the fuel injectors.

(7) Connect the fuel line to the fuel rail (Fig. 23). Refer to Quick Connect Fittings in the Fuel Delivery Section of this Group.

(8) Rotate the assembly back into place and install the 2 bolts to the thermostat housing tighten to N·m (in. lbs.).

(9) Move the upper radiator house clamp back into place (Fig. 19).

(10) Install the 2 small hoses to the thermostat housing (Fig. 20).

(11) Fill the Coolant system, refer to the Cooling section for more information.

(12) Install the intake manifold, refer to the Engine section.

(13) Install the 2 bolts to the rear of the intake manifold (Fig. 17) tighten to N·m (in. lbs.).

(14) Install the 5 bolts to the front of the intake manifold and tighten to N·m (in. lbs.).

(15) Install the vacuum lines to the rear of the intake manifold (Fig. 17).

(16) Connect and lock the MAP sensor electrical connector (Fig. 16).

(17) Install the cables to the throttle body bracket.

(18) Install the throttle and speed control cables to the throttle body.

(19) Install the throttle control shield (Fig. 15).

(20) Connect and lock the electrical connections at the throttle body (Fig. 14).

(21) Connect the purge hose to the throttle body (Fig. 14).

(22) Connect the throttle body inlet hose to the throttle body (Fig. 14) and tighten clamps to 3 N·m ±1 (25 in. lbs. ±5) torque.

(23) Connect the negative battery cable.

(24) Use the DRB scan tool ASD Fuel System Test to pressurize the fuel system. Check for leaks.

INSTALLATION - 1.6L

(1) Apply a light coating of clean engine oil to the upper O-ring.

(2) Install injector in cup on fuel rail.

(3) Install retaining clip.

(4) Apply a light coating of clean engine oil to the O-ring on the nozzle end of each injector.

(5) Insert fuel injector nozzles into openings in lower intake manifold (Fig. 28). Seat the injectors in place. Tighten fuel rail mounting screws to 22.5 N·m ± 3 N·m (200±30 in. lbs.).

(6) Attach electrical connectors to fuel injectors (Fig. 26), refer to the fuel injector connector section for electrical connector installation.

(7) Connect fuel supply tube to fuel rail (Fig. 27). Refer to Quick Connect Fittings in the Fuel Delivery Section of this Group.

(8) Install the wiring harness to the fuel rail brackets.

(9) Connect the negative battery cable.

(10) Use the DRB scan tool ASD Fuel System Test to pressurize the fuel system. Check for leaks.

(11) Install air cleaner assembly cover.

FUEL TANK

DESCRIPTION

The fuel tank is constructed of a plastic material. Its main functions are for fuel storage and for placement of the fuel pump module. The tank is made from High density Polyethylene (HDPE) material.If equipped with ORVR (Onboard Refueling Vapor Recovery) it has been added to the fuel tank to control refueling vapor emissions.

OPERATION

All models pass a full 360 degree rollover test without fuel leakage. To accomplish this, fuel and

FUEL TANK (Continued)

vapor flow controls are required for all fuel tank connections.

All models are equipped with either one or two rollover valves mounted into the top of the fuel tank (or pump module).

An evaporation control system is connected to the rollover valve(s)/control valve(Refer to 25 - EMISSIONS CONTROL/EVAPORATIVE EMISSIONS/ ORVR - OPERATION) to reduce emissions of fuel vapors into the atmosphere, when the tank is vented due to vapor expansion in the tank. When fuel evaporates from the fuel tank, vapors pass through vent hoses or tubes to a charcoal canister where they are temporarily held. When the engine is running, the vapors are drawn into the intake manifold. In addition, fuel vapors produced during vehicle refueling are allowed to pass through the vent hoses/tubes to the charcoal canister(s) for temporary storage (prior to being drawn into the intake manifold). All models are equipped with a self-diagnosing system using a Leak Detection Pump (LDP) or Natural Vacuum Leak Detection (NVLD). Refer to the Emission Control System for additional information.

INLET CHECK VALVE

All vehicles have an inlet check valve on the inside of the fuel tank at the filler inlet

The valve prevents fuel from splashing back on customer during vehicle refueling. The valve is a non-serviceable item.

REMOVAL

WARNING: RELEASE FUEL SYSTEM PRESSURE BEFORE SERVICING FUEL SYSTEM COMPONENTS. SERVICE VEHICLES IN WELL VENTILATED AREAS AND AVOID IGNITION SOURCES. NEVER SMOKE WHILE SERVICING THE VEHICLE.

(1) Release fuel system pressure. Refer to Fuel Pressure Release Procedure in this section.

(2) Remove the air cleaner lid, disconnect the inlet air temperature sensor and makeup air hose.

(3) Remove the negative battery cable.

(4) Remove fuel cap slowly to release tank pressure.

(5) With vehicle on a hoist, drain fuel from tank. Drain fuel tank refer to Draining the Fuel Tank in this section.

(6) Raise and support the vehicle.

WARNING: There may be fuel in the fill tube. Remove hose carefully to reduce fuel splash.

(7) Disconnect fuel tank from rubber fill hose.

WARNING: WRAP SHOP TOWELS AROUND HOSES TO CATCH ANY GASOLINE SPILLAGE.

(8) Remove bolts from the fuel tank straps (Fig. 29).

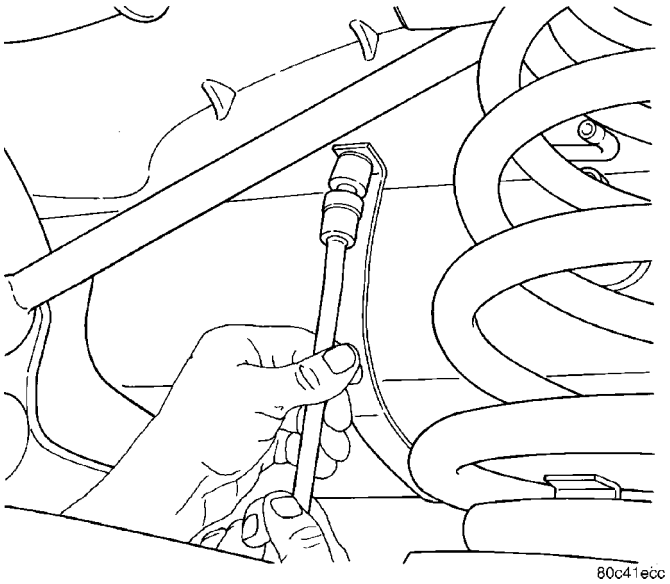

Fig. 29 Fuel Tank Straps

(9) Lower fuel tank and remove the EVAP line and recirculation line.

(10) Remove vacuum line from LDP.

(11) Disconnect fuel line, it is in the front of the fuel tank. This is a quick connect fittings (Fig. 30).

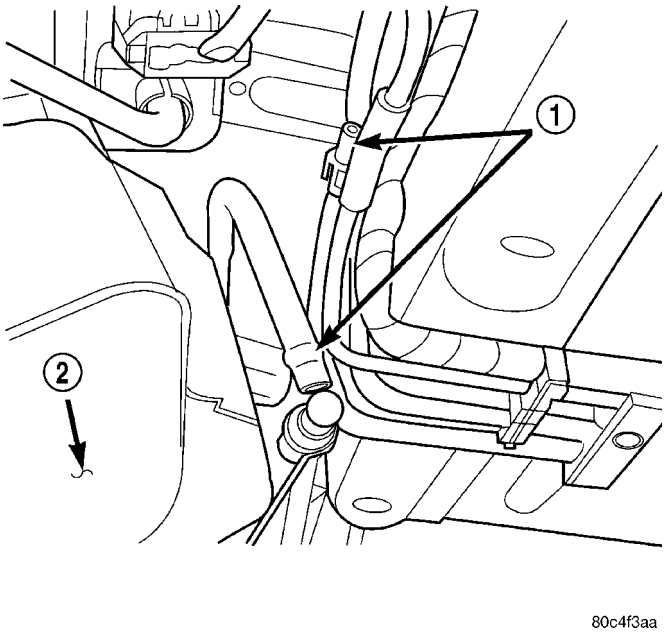

Fig. 30 Fuel Line

1 - FUEL LINE
2 - FUEL TANK

FUEL TANK (Continued)

(12) Unlock the electrical connector then disconnect the electrical connector (Fig. 31)

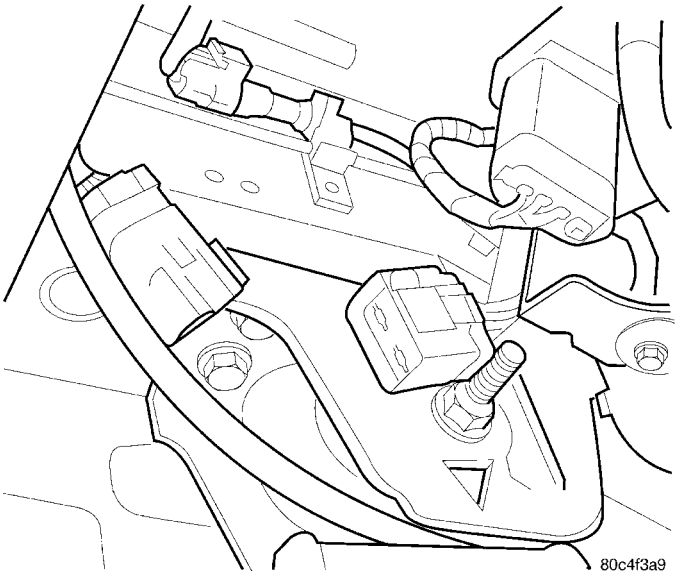

Fig. 31 Electrical Connector

(13) Remove hoses from EVAP canister.
(14) Remove fuel tank from vehicle.

INSTALLATION

WARNING: RELEASE FUEL SYSTEM PRESSURE BEFORE SERVICING FUEL SYSTEM COMPONENTS. SERVICE VEHICLES IN WELL VENTILATED AREAS AND AVOID IGNITION SOURCES. NEVER SMOKE WHILE SERVICING THE VEHICLE.

(1) Position fuel tank on transmission jack.
(2) Raise fuel tank into position.
(3) Connect vacuum line to LDP.
(4) Install EVAP line and recirculation line.
(5) Connect electrical connector (Fig. 31) and lock the connector.
(6) Connect the fuel line (Fig. 30) . Refer to Quick Connect Fittings in this section.
(7) Connect fuel fill tube to tank inlet. Tighten hose clamp to 3.5 N·m (31 in. lbs.) torque.
(8) Position fuel tank straps. Tighten fuel tank strap bolts to 23 N·m (250 in. lbs.) torque (Fig. 29) . Remove transmission jack. Ensure straps are not twisted or bent.
(9) Lower vehicle.
(10) Fill fuel tank, install filler cap.
(11) Install the negative battery cable.
(12) Install the air cleaner lid, connect the inlet air temperature sensor and makeup air hose.
(13) Use the DRB scan tool ASD Fuel System Test to pressurize the fuel system. Check for leaks.

FUEL TANK FILLER TUBE

REMOVAL

(1) Remove the air cleaner lid and makeup air hose.
(2) Remove the negative battery cable.
(3) Loosen fuel filler tube cap (Fig. 32) .

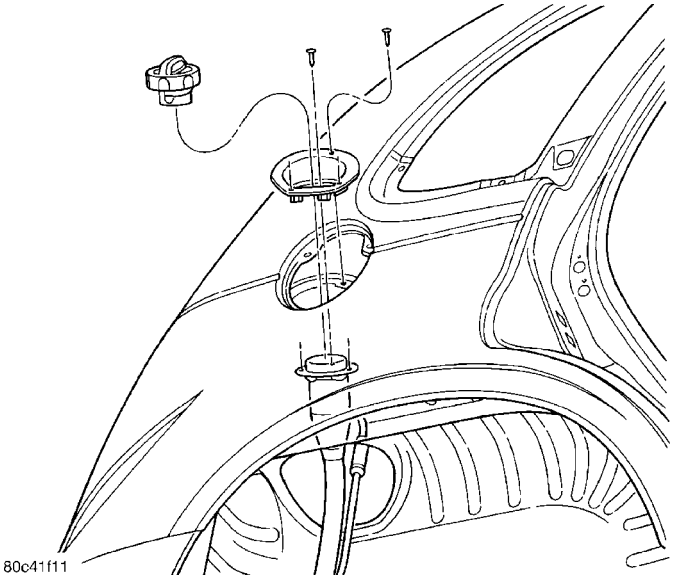

Fig. 32 Fuel Filler Cap

(4) Remove fuel filler neck screws (Fig. 33) .

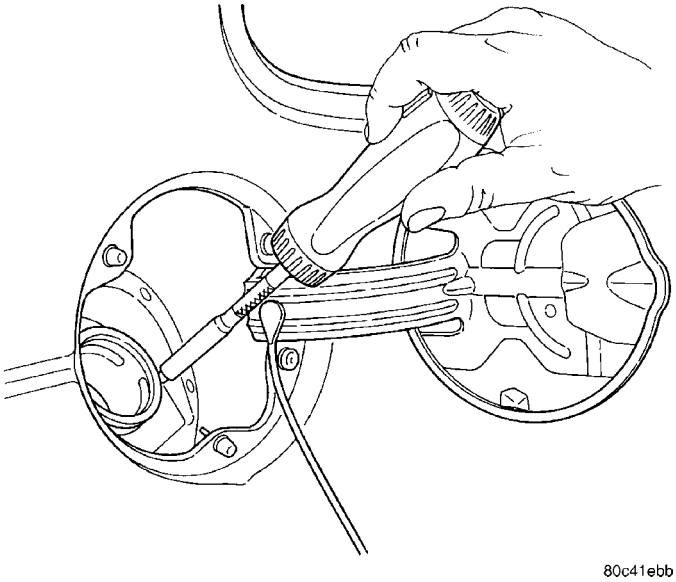

Fig. 33 Fuel Filler Neck Removal/Installation

(5) Raise vehicle and support.
(6) Remove the right rear wheel.
(7) Remove the rear half of the inner splash shield (Fig. 34) .

NOTE: Drain fuel tank if it is more than half full.

FUEL TANK FILLER TUBE (Continued)

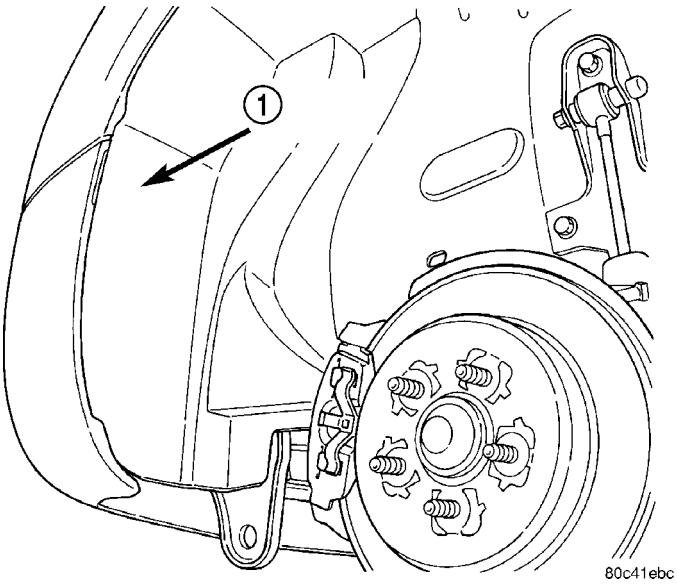

Fig. 34 Slash Shield

1 - SPLASH SHIELD

(8) Disconnect fuel filler tube hose from fuel tank neck (Fig. 35) . Remove fuel filler tube assembly.

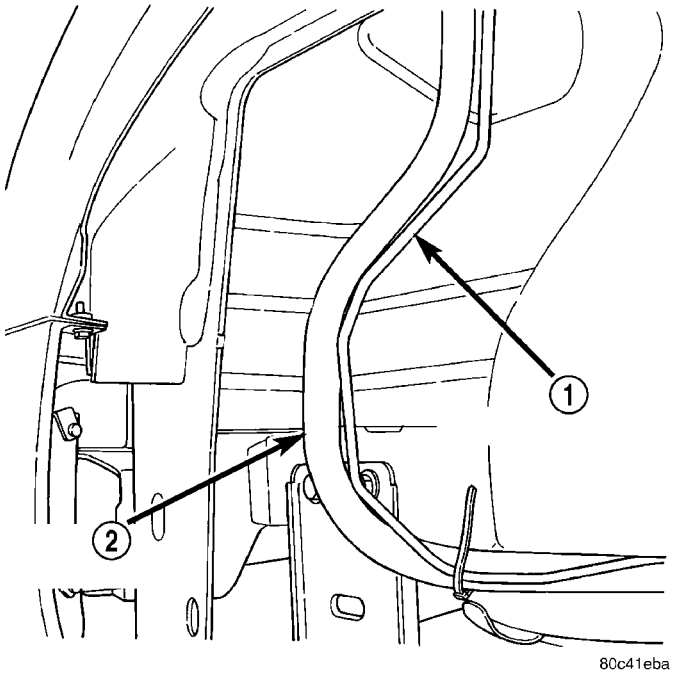

Fig. 35 Filler Tube

1 - VAPOR RECIRCULATION TUBE
2 - FILLER TUBE

INSTALLATION

(1) Install fuel filler tube. Connect fuel filler tube hose to fuel tank neck and tighten clamp to 4.1 N·m (38 ins. lbs.) (Fig. 35) .

(2) Install the rear half of the inner splash shield (Fig. 34) .

(3) Lower vehicle.

(4) Install fuel filler neck screws and tighten to 2.7 N·m (24 ins. lbs.) (Fig. 33) .

(5) Install fuel filler tube cap.

(6) Install the negative battery cable.

(7) Install the air cleaner lid and makeup air hose.

INLET FILTER

DESCRIPTION

The fuel pump inlet strainer is a non-serviceable part.

QUICK CONNECT FITTING

STANDARD PROCEDURE - QUICK-CONNECT FITTINGS

REMOVAL

When disconnecting a quick-connect fitting, the retainer will remain on the fuel tube nipple.

WARNING: RELEASE FUEL SYSTEM PRESSURE BEFORE DISCONNECTING A QUICK-CONNECT FITTINGS. REFER TO THE FUEL PRESSURE RELEASE PROCEDURE.

(1) Perform Fuel Pressure Release Procedure. Refer to the Fuel Pressure Release Procedure in this section.

(2) Disconnect negative cable from battery or auxiliary jumper terminal.

(3) Squeeze retainer tabs together and pull fuel tube/quick-connect fitting assembly off of fuel tube nipple. The retainer will remain on fuel tube.

INSTALLATION

CAUTION: Never install a quick-connect fitting without the retainer being either on the fuel tube or already in the quick-connect fitting. In either case, ensure the retainer locks securely into the quick-connect fitting by firmly pulling on fuel tube and fitting to ensure it is secured.

(1) Using a clean lint free cloth, clean the fuel tube nipple and retainer.

(2) Prior to connecting the fitting to the fuel tube, coat the fuel tube nipple with clean engine oil.

(3) Push the quick-connect fitting over the fuel tube until the **retainer seats and a click is heard.**

(4) The plastic quick-connect fitting has windows in the sides of the casing. When the fitting completely attaches to the fuel tube, the retainer locking ears and the fuel tube shoulder are visible in the

QUICK CONNECT FITTING (Continued)

windows. If they are not visible, the retainer was not properly installed (Fig. 36). **Do not rely upon the audible click to confirm a secure connection.**

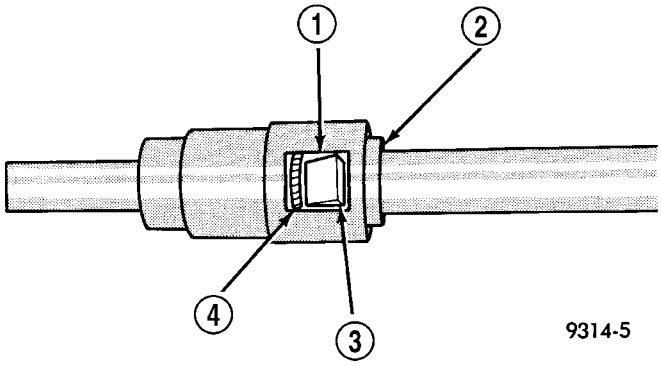

Fig. 36 Plastic Quick-Connect Fitting/Fuel Tube Connection

1 - WINDOW
2 - TAB (2)
3 - EAR
4 - SHOULDER (ON TUBE)

(5) Connect negative cable to battery or auxiliary jumper terminal.

CAUTION: When using the ASD Fuel System Test, the Auto Shutdown (ASD) Relay remains energized for several minutes, until the test is stopped, or until the ignition switch is turned to the Off position.

(6) Use the DRB III® scan tool ASD Fuel System Test to pressurize the fuel system. Check for leaks.

TWO-TAB TYPE FITTING

This type of fitting is equipped with tabs located on both sides of the fitting (Fig. 37). These tabs are supplied for disconnecting the quick-connect fitting from component being serviced.

CAUTION: The interior components (O-rings, spacers) of this type of quick-connect fitting are not serviced separately, but new plastic retainers are available. Do not attempt to repair damaged fittings or fuel lines/tubes. If repair is necessary, replace the complete fuel tube assembly.

WARNING: THE FUEL SYSTEM IS UNDER A CONSTANT PRESSURE (EVEN WITH THE ENGINE OFF). BEFORE SERVICING ANY FUEL SYSTEM HOSES, FITTINGS OR LINES, THE FUEL SYSTEM PRESSURE MUST BE RELEASED. REFER TO THE FUEL PRESSURE RELEASE PROCEDURE IN THIS GROUP.

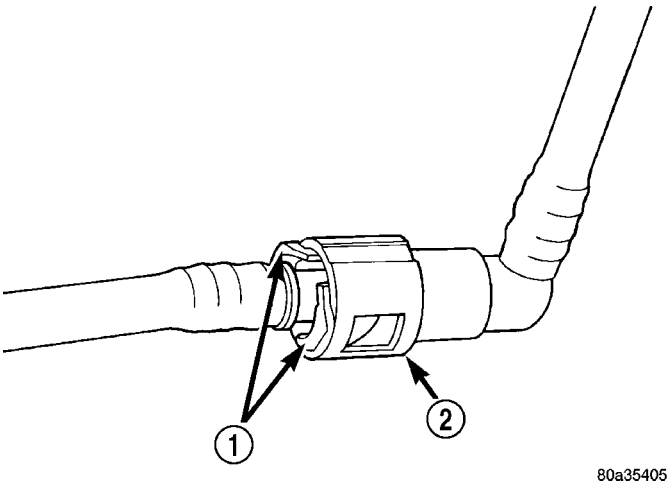

Fig. 37 Typical Two-Tab Type Quick-Connect Fitting

1 - TAB(S)
2 - QUICK-CONNECT FITTING

DISCONNECTION/CONNECTION

(1) Perform fuel pressure release procedure. Refer to Fuel Pressure Release Procedure in this group.

(2) Disconnect negative battery cable from battery or auxiliary jumper terminal.

(3) Clean fitting of any foreign material before disassembly.

(4) To disconnect quick-connect fitting, squeeze plastic retainer tabs (Fig. 37) against sides of quick-connect fitting with your fingers. Tool use is not required for removal and may damage plastic retainer. Pull fitting from fuel system component being serviced. The plastic retainer will remain on component being serviced after fitting is disconnected. The O-rings and spacer will remain in quick-connect fitting connector body.

(5) Inspect quick-connect fitting body and component for damage. Replace as necessary.

CAUTION: When the quick-connect fitting was disconnected, the plastic retainer will remain on the component being serviced. If this retainer must be removed, very carefully release the retainer from the component with two small screwdrivers. After removal, inspect the retainer for cracks or any damage.

(6) Prior to connecting quick-connect fitting to component being serviced, check condition of fitting and component. Clean parts with a lint-free cloth. Lubricate with clean engine oil.

(7) Insert quick-connect fitting to component being serviced and into plastic retainer. When a connection is made, a click will be heard.

(8) Verify a locked condition by firmly pulling on fuel tube and fitting (15-30 lbs.).

QUICK CONNECT FITTING (Continued)

(9) Connect negative cable to battery or auxiliary jumper terminal.

(10) Use the DRB III® scan tool ASD Fuel System Test to pressurize the fuel system. Check for leaks.

PLASTIC RETAINER RING TYPE FITTING

This type of fitting can be identified by the use of a full-round plastic retainer ring (Fig. 38) usually black in color.

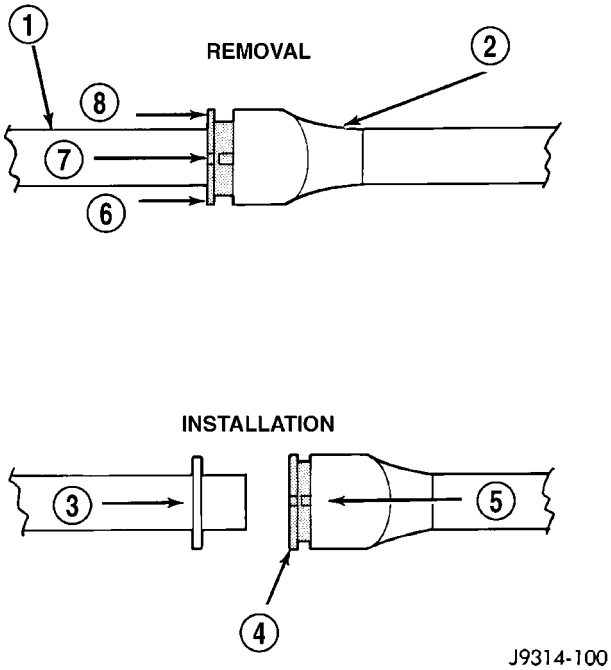

Fig. 38 Plastic Retainer Ring Type Fitting

1 - FUEL TUBE
2 - QUICK CONNECT FITTING
3 - PUSH
4 - PLASTIC RETAINER
5 - PUSH
6 - PUSH
7 - PUSH
8 - PUSH

CAUTION: The interior components (O-rings, spacers, retainers) of this type of quick-connect fitting are not serviced separately. Do not attempt to repair damaged fittings or fuel lines/tubes. If repair is necessary, replace the complete fuel tube assembly.

WARNING: THE FUEL SYSTEM IS UNDER A CONSTANT PRESSURE (EVEN WITH THE ENGINE OFF). BEFORE SERVICING ANY FUEL SYSTEM HOSES, FITTINGS OR LINES, THE FUEL SYSTEM PRESSURE MUST BE RELEASED. REFER TO THE FUEL SYSTEM PRESSURE RELEASE PROCEDURE IN THIS GROUP.

DISCONNECTION/CONNECTION

(1) Perform fuel pressure release procedure. Refer to Fuel Pressure Release Procedure in this section.

(2) Disconnect negative battery cable from battery or auxiliary jumper terminal.

(3) Clean fitting of any foreign material before disassembly.

(4) To release fuel system component from quick-connect fitting, firmly push fitting towards component being serviced while firmly pushing plastic retainer ring into fitting (Fig. 38). With plastic ring depressed, pull fitting from component. **The plastic retainer ring must be pressed squarely into fitting body. If this retainer is cocked during removal, it may be difficult to disconnect fitting. Use an open-end wrench on shoulder of plastic retainer ring to aid in disconnection.**

(5) After disconnection, plastic retainer ring will remain with quick-connect fitting connector body.

(6) Inspect fitting connector body, plastic retainer ring and fuel system component for damage. Replace as necessary.

(7) Prior to connecting quick-connect fitting to component being serviced, check condition of fitting and component. Clean parts with a lint-free cloth. Lubricate with clean engine oil.

(8) Insert quick-connect fitting into component being serviced until a click is felt.

(9) Verify a locked condition by firmly pulling on fuel tube and fitting (15-30 lbs.).

(10) Connect negative battery cable to battery or auxiliary jumper terminal.

(11) Use the DRB III® scan tool ASD Fuel System Test to pressurize the fuel system. Check for leaks.

FUEL INJECTION

TABLE OF CONTENTS

page

FUEL INJECTION
OPERATION
OPERATION - INJECTION SYSTEM 21
OPERATION - MODES OF OPERATION 21
FUEL CORRECTION or ADAPTIVE MEMORIES 23
PROGRAMMABLE COMMUNICATIONS INTERFACE (PCI) BUS 24
SYSTEM DIAGNOSIS 25
SPECIFICATIONS
TORQUE 25
SPECIAL TOOLS
FUEL 26
ACCELERATOR PEDAL
REMOVAL 26
INSTALLATION 27
ACCELERATOR PEDAL POSITION SENSOR - 1.6L
DESCRIPTION 27
REMOVAL - LHD 27
INSTALLATION - LHD 27
CRANKSHAFT POSITION SENSOR
DESCRIPTION 28
OPERATION 28
REMOVAL
REMOVAL - 1.6L 29
REMOVAL - 2.0, 2.4, 2.4L TURBO 29
INSTALLATION
INSTALLATION - 1.6L 30
INSTALLATION - 2.0, 2.4, 2.4L Turbo 30
FUEL INJECTOR
DESCRIPTION 30
OPERATION 30
STANDARD PROCEDURE
REMOVAL - INJECTOR CONNECTOR 31
REMOVAL
REMOVAL - 2.0, 2.4L 31
REMOVAL - 1.6L 32
REMOVAL - 2.4L TURBO 32
INSTALLATION
INSTALLATION - 2.0, 2.4L 35
INSTALLATION - 1.6L 36
INSTALLATION - 2.4L TURBO 36
FUEL PUMP RELAY
DESCRIPTION 36
OPERATION 36
IDLE AIR CONTROL MOTOR
DESCRIPTION 37
OPERATION 37
REMOVAL 37
INSTALLATION 37
INLET AIR TEMPERATURE SENSOR
DESCRIPTION 38
OPERATION 38
REMOVAL 38
INSTALLATION 38
MAP SENSOR
DESCRIPTION 39
OPERATION 39
REMOVAL
REMOVAL - 2.0, 2.4, 2.4L TURBO 40
REMOVAL - 1.6L 40
INSTALLATION
INSTALLATION - 2.0, 2.4, 2.4L Turbo 40
INSTALLATION - 1.6L 40
O2 SENSOR
DESCRIPTION 40
OPERATION 40
REMOVAL
REMOVAL - 1/1 UPSTREAM 42
REMOVAL - 1/2 DOWNSTREAM 42
REMOVAL - 2.4L TURBO 42
INSTALLATION
INSTALLATION - 1/1 UPSTREAM 43
INSTALLATION - 1/2 DOWNSTREAM 43
INSTALLATION - 2.4L TURBO 43
THROTTLE BODY
DESCRIPTION 44
OPERATION 44
REMOVAL
REMOVAL - 2.0, 2.4L 44
REMOVAL - 1.6L 45
REMOVAL - 2.4L TURBO 46
INSTALLATION
INSTALLATION - 2.0, 2.4L 47
INSTALLATION - 1.6L 47
INSTALLATION - 2.4L TURBO 48
THROTTLE CONTROL CABLE
REMOVAL 48
INSTALLATION 48
THROTTLE POSITION SENSOR
DESCRIPTION 49
OPERATION 49
REMOVAL 49
INSTALLATION 50

FUEL INJECTION

OPERATION

OPERATION - INJECTION SYSTEM

All engines used in this section have a sequential Multi-Port Electronic Fuel Injection system. The MPI system is computer regulated and provides precise air/fuel ratios for all driving conditions. The Powertrain Control Module (PCM) operates the fuel injection system.

The PCM regulates:

- Ignition timing
- Air/fuel ratio
- Emission control devices
- Cooling fan
- Charging system
- Idle speed
- Vehicle speed control

Various sensors provide the inputs necessary for the PCM to correctly operate these systems. In addition to the sensors, various switches also provide inputs to the PCM.

The PCM can adapt its programming to meet changing operating conditions.

Fuel is injected into the intake port above the intake valve in precise metered amounts through electrically operated injectors. The PCM fires the injectors in a specific sequence. Under most operating conditions, the PCM maintains an air fuel ratio of 14.7 parts air to 1 part fuel by constantly adjusting injector pulse width. Injector pulse width is the length of time the injector is open.

The PCM adjusts injector pulse width by opening and closing the ground path to the injector. Engine RPM (speed) and manifold absolute pressure (air density) are the **primary** inputs that determine injector pulse width.

OPERATION - MODES OF OPERATION

As input signals to the PCM change, the PCM adjusts its response to output devices. For example, the PCM must calculate a different injector pulse width and ignition timing for idle than it does for Wide Open Throttle (WOT). There are several different modes of operation that determine how the PCM responds to the various input signals.

There are two different areas of operation, OPEN LOOP and CLOSED LOOP.

During OPEN LOOP modes the PCM receives input signals and responds according to preset PCM programming. Inputs from the upstream and downstream heated oxygen sensors are not monitored during OPEN LOOP modes, except for heated oxygen sensor diagnostics (they are checked for shorted conditions at all times).

During CLOSED LOOP modes the PCM monitors the inputs from the upstream and downstream heated oxygen sensors. The upstream heated oxygen sensor input tells the PCM if the calculated injector pulse width resulted in the ideal air-fuel ratio of 14.7 to one. By monitoring the exhaust oxygen content through the upstream heated oxygen sensor, the PCM can fine tune injector pulse width. Fine tuning injector pulse width allows the PCM to achieve optimum fuel economy combined with low emissions.

For the PCM to enter CLOSED LOOP operation, the following must occur:

(1) Engine coolant temperature must be over 35°F.

- If the coolant is over 35°F the PCM will wait 38 seconds.
- If the coolant is over 50°F the PCM will wait 15 seconds.
- If the coolant is over 167°F the PCM will wait 3 seconds.

(2) For other temperatures the PCM will interpolate the correct waiting time.

(3) O2 sensor must read either greater than 0.745 volts or less than 0.29 volt.

(4) The multi-port fuel injection systems has the following modes of operation:

- Ignition switch ON (Zero RPM)
- Engine start-up
- Engine warm-up
- Cruise
- Idle
- Acceleration
- Deceleration
- Wide Open Throttle
- Ignition switch OFF

(5) The engine start-up (crank), engine warm-up, deceleration with fuel shutoff and wide open throttle modes are OPEN LOOP modes. Under most operating conditions, the acceleration, deceleration (with A/C on), idle and cruise modes, **with the engine at operating temperature** are CLOSED LOOP modes.

IGNITION SWITCH ON (ZERO RPM) MODE

When the ignition switch activates the fuel injection system, the following actions occur:

- The PCM monitors the engine coolant temperature sensor and throttle position sensor input. The PCM determines basic fuel injector pulse width from this input.
- The PCM determines atmospheric air pressure from the MAP sensor input to modify injector pulse width.

When the key is in the ON position and the engine is not running (zero rpm), the Auto Shutdown (ASD) and fuel pump relays de-energize after approximately

FUEL INJECTION (Continued)

1 second. Therefore, battery voltage is not supplied to the fuel pump, ignition coil, fuel injectors and heated oxygen sensors.

ENGINE START-UP MODE

This is an OPEN LOOP mode. If the vehicle is in park or neutral (automatic transaxles) or the clutch pedal is depressed (manual transaxles) the ignition switch energizes the starter relay when the engine is not running. The following actions occur when the starter motor is engaged.

- If the PCM receives the camshaft position sensor and crankshaft position sensor signals, it energizes the Auto Shutdown (ASD) relay and fuel pump relay. If the PCM does not receive both signals within approximately one second, it will not energize the ASD relay and fuel pump relay. The ASD and fuel pump relays supply battery voltage to the fuel pump, fuel injectors, ignition coil, (EGR solenoid and PCV heater if equipped) and heated oxygen sensors.
- The PCM energizes the injectors (on the 69° degree falling edge) for a calculated pulse width until it determines crankshaft position from the camshaft position sensor and crankshaft position sensor signals. The PCM determines crankshaft position within 1 engine revolution.
- After determining crankshaft position, the PCM begins energizing the injectors in sequence. It adjusts injector pulse width and controls injector synchronization by turning the individual ground paths to the injectors On and Off.
- When the engine idles within ±64 RPM of its target RPM, the PCM compares current MAP sensor value with the atmospheric pressure value received during the Ignition Switch On (zero RPM) mode.

Once the ASD and fuel pump relays have been energized, the PCM determines injector pulse width based on the following:

- MAP
- Engine RPM
- Battery voltage
- Engine coolant temperature
- Inlet/Intake air temperature (IAT)
- Throttle position
- The number of engine revolutions since cranking was initiated

During Start-up the PCM maintains ignition timing at 9° BTDC.

ENGINE WARM-UP MODE

This is an OPEN LOOP mode. The following inputs are received by the PCM:

- Manifold Absolute Pressure (MAP)
- Crankshaft position (engine speed)
- Engine coolant temperature
- Inlet/Intake air temperature (IAT)
- Camshaft position
- Knock sensor
- Throttle position
- A/C switch status
- Battery voltage
- Vehicle speed
- Speed control
- O2 sensors

The PCM adjusts injector pulse width and controls injector synchronization by turning the individual ground paths to the injectors On and Off.

The PCM adjusts ignition timing and engine idle speed. Engine idle speed is adjusted through the idle air control motor.

CRUISE OR IDLE MODE

When the engine is at operating temperature this is a CLOSED LOOP mode. During cruising or idle the following inputs are received by the PCM:

- Manifold absolute pressure
- Crankshaft position (engine speed)
- Inlet/Intake air temperature
- Engine coolant temperature
- Camshaft position
- Knock sensor
- Throttle position
- Exhaust gas oxygen content (O2 sensors)
- A/C switch status
- Battery voltage
- Vehicle speed

The PCM adjusts injector pulse width and controls injector synchronization by turning the individual ground paths to the injectors On and Off.

The PCM adjusts engine idle speed and ignition timing. The PCM adjusts the air/fuel ratio according to the oxygen content in the exhaust gas (measured by the upstream and downstream heated oxygen sensor).

The PCM monitors for engine misfire. During active misfire and depending on the severity, the PCM either continuously illuminates or flashes the malfunction indicator lamp (Check Engine light on instrument panel). Also, the PCM stores an engine misfire DTC in memory, if 2nd trip with fault.

The PCM performs several diagnostic routines. They include:

- Oxygen sensor monitor
- Downstream heated oxygen sensor diagnostics during open loop operation (except for shorted)
- Fuel system monitor
- EGR monitor (if equipped)
- Purge system monitor
- Catalyst efficiency monitor
- All inputs monitored for proper voltage range, rationality.

FUEL INJECTION (Continued)

- All monitored components (refer to the Emission section for On-Board Diagnostics).

The PCM compares the upstream and downstream heated oxygen sensor inputs to measure catalytic convertor efficiency. If the catalyst efficiency drops below the minimum acceptable percentage, the PCM stores a diagnostic trouble code in memory, after 2 trips.

During certain idle conditions, the PCM may enter a variable idle speed strategy. During variable idle speed strategy the PCM adjusts engine speed based on the following inputs.

- A/C status
- Battery voltage
- Battery temperature or Calculated Battery Temperature
- Engine coolant temperature
- Engine run time
- Inlet/Intake air temperature
- Vehicle mileage

ACCELERATION MODE

This is a CLOSED LOOP mode. The PCM recognizes an abrupt increase in Throttle Position sensor output voltage or MAP sensor output voltage as a demand for increased engine output and vehicle acceleration. The PCM increases injector pulse width in response to increased fuel demand.

- Wide Open Throttle-open loop

DECELERATION MODE

This is a CLOSED LOOP mode. During deceleration the following inputs are received by the PCM:

- A/C status
- Battery voltage
- Inlet/Intake air temperature
- Engine coolant temperature
- Crankshaft position (engine speed)
- Exhaust gas oxygen content (upstream heated oxygen sensor)
- Knock sensor
- Manifold absolute pressure
- Throttle position sensor
- IAC motor (solenoid) control changes in response to MAP sensor feedback

The PCM may receive a closed throttle input from the Throttle Position Sensor (TPS) when it senses an abrupt decrease in manifold pressure. This indicates a hard deceleration (Open Loop). In response, the PCM may momentarily turn off the injectors. This helps improve fuel economy, emissions and engine braking.

WIDE-OPEN-THROTTLE MODE

This is an OPEN LOOP mode. During wide-open-throttle operation, the following inputs are used by the PCM:

- Inlet/Intake air temperature
- Engine coolant temperature
- Engine speed
- Knock sensor
- Manifold absolute pressure
- Throttle position

When the PCM senses a wide-open-throttle condition through the Throttle Position Sensor (TPS) it de-energizes the A/C compressor clutch relay. This disables the air conditioning system and disables EGR (if equipped).

The PCM adjusts injector pulse width to supply a predetermined amount of additional fuel, based on MAP and RPM.

IGNITION SWITCH OFF MODE

When the operator turns the ignition switch to the OFF position, the following occurs:

- All outputs are turned off, unless 02 Heater Monitor test is being run. Refer to the Emission section for On-Board Diagnostics.
- No inputs are monitored except for the heated oxygen sensors. The PCM monitors the heating elements in the oxygen sensors and then shuts down.

FUEL CORRECTION or ADAPTIVE MEMORIES

DESCRIPTION

In Open Loop, the PCM changes pulse width without feedback from the O2 Sensors. Once the engine warms up to approximately 30 to 35° F, the PCM goes into closed loop **Short Term Correction** and utilizes feedback from the O2 Sensors. Closed loop **Long Term Adaptive Memory** is maintained above 170° to 190° F unless the PCM senses wide open throttle. At that time the PCM returns to Open Loop operation.

OPERATION

Short Term

The first fuel correction program that begins functioning is the short term fuel correction. This system corrects fuel delivery in direct proportion to the readings from the Upstream O2 Sensor.

The PCM monitors the air/fuel ratio by using the input voltage from the O2 Sensor. When the voltage reaches its preset high or low limit, the PCM begins to add or remove fuel until the sensor reaches its switch point. The short term corrections then begin.

The PCM makes a series of quick changes in the injector pulse-width until the O2 Sensor reaches its

opposite preset limit or switch point. The process then repeats itself in the opposite direction.

Short term fuel correction will keep increasing or decreasing injector pulse-width based upon the upstream O2 Sensor input. The maximum range of authority for short term memory is 25% (+/-) of base pulse-width. Short term is violated and is lost when ignition is turned OFF.

Long Term

The second fuel correction program is the long term adaptive memory. In order to maintain correct emission throughout all operating ranges of the engine, a cell structure based on engine rpm and load (MAP) is used.

Ther number of cells varies upon the driving conditions. Two cells are used only during idle, based upon TPS and Park/Neutral switch inputs. There may be two other cells used for deceleration, based on TPS, engine rpm, and vehicle speed. The other twelve cells represent a manifold pressure and an rpm range. Six of the cells are high rpm and the other six are low rpm. Each of these cells has a specific MAP voltage range Typical Adaptive Memory Fuel Cells .

As the engine enters one of these cells the PCM looks at the amount of short term correction being used. Because the goal is to keep short term at 0 (O2 Sensor switching at 0.5 volt), long term will update in the same direction as short term correction was moving to bring the short term back to 0. Once short term is back at 0, this long term correction factor is stored in memory.

The values stored in long term adaptive memory are used for all operating conditions, including open loop and cold starting. However, the updating of the long term memory occurs after the engine has exceeded approximately 170°-190° F, with fuel control in closed loop and two minutes of engine run time. This is done to prevent any transitional temperature or start-up compensations from corrupting long term fuel correction.

Long term adaptive memory can change the pulse-width by as much as 25%, which means it can correct for all of short term. It is possible to have a problem that would drive long term to 25% and short term to another 25% for a total change of 50% away from base pulse-width calculation.

TYPICAL ADAPTIVE MEMORY FUEL CELLS

	Open Throttle	Open Throttle	Open Throttle	Open Throttle	Open Throttle	Open Throttle	Idle	Decel
Vacuum	20	17	13	9	5	0		
Above 1,984 rpm	1	3	5	7	9	11	13 Drive	15
Below 1,984 rpm	0	2	4	6	8	10	12 Neutral	14
MAP volt =	0	1.4	2.0	2.6	3.3	3.9		

Fuel Correction Diagnostics

There are two fuel correction diagnostic routines:

- Fuel System Rich
- Fuel System Lean

A DTC is set and the MIL is illuminated if the PCM detects either of these conditions. This is determined based on total fuel correction, short term times long term.

PROGRAMMABLE COMMUNICATIONS INTERFACE (PCI) BUS

DESCRIPTION

The Programmable Communication Interface Multiplex system (PCI Bus) consist of a single wire. The Body Control Module (BCM) acts as a splice to connect each module and the Data Link Connector (DLC) together. Each module is wired in parallel to the data bus through its PCI chip set and uses its ground as the bus reference. The wiring is a minimum 20 gage wire.

OPERATION

Various modules exchange information through a communications port called the PCI Bus. The Powertrain Control Module (PCM) transmits the Malfunction Indicator Lamp (Check Engine) On/Off signal and engine RPM on the PCI Bus. The PCM receives the Air Conditioning select input, transaxle gear position inputs over the PCI Bus. The PCM also receives the air conditioning evaporator temperature signal from the PCI Bus.

The following components access or send information on the PCI Bus.

FUEL INJECTION (Continued)

- Instrument Panel
- Body Control Module
- Air Bag System Diagnostic Module
- Full ATC Display Head (if equipped)
- ABS Module
- Transmission Control Module
- Powertrain Control Module
- Travel Module
- SKIM

SYSTEM DIAGNOSIS

OPERATION

The PCM can test many of its own input and output circuits. If the PCM senses a fault in a major system, the PCM stores a Diagnostic Trouble Code (DTC) in memory.

For DTC information see On-Board Diagnostics (Refer to 8 - ELECTRICAL/ELECTRONIC CONTROL MODULES/POWERTRAIN CONTROL MODULE - DESCRIPTION) .

SPECIFICATIONS

TORQUE

DESCRIPTION	N·m	Ft. Lbs.	In. Lbs.
Air Cleaner Lid Screws	3.9		35
Crankshaft Position Sensor Mounting Bolts	8		70
Engine Coolant Temperature Sensor	18	13.2	165
IAC Motor-To-Throttle Body Bolts	4.5		40
MAP Sensor	4.5		40
Oxygen Sensor	28	20	
Powertrain Control Module (PCM) Mounting Screws	4		35
Throttle Body Mounting Bolts	11.75 ±4		105 ±20
Throttle Body Cable Bracket Bolts	11.75 ±4		105 ±20
Throttle Position Sensor Mounting Screws	2		17
Vehicle Speed Sensor Mounting Bolt	2.2		19.4

FUEL INJECTION (Continued)

SPECIAL TOOLS

FUEL

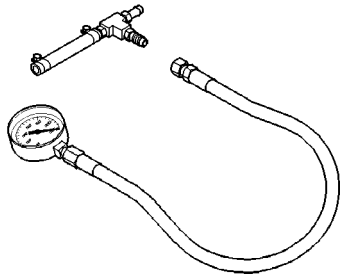

Pressure Gauge Assembly C–4799–B

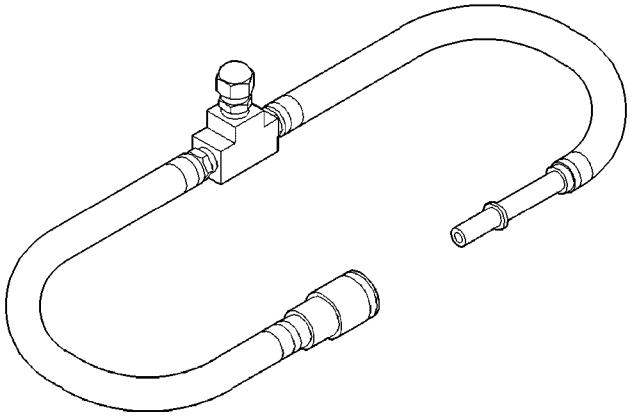

Fuel Pressure Test Adapter 6539

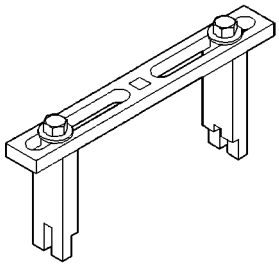

Spanner Wrench 6856

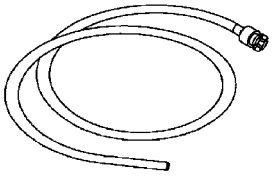

Fuel Line Adapter 1/4

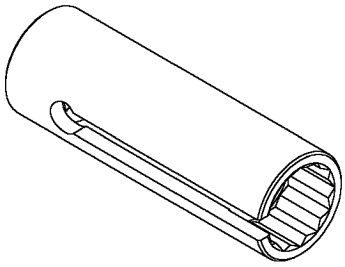

O2S (Oxygen Sensor) Remover/Installer—C-4907

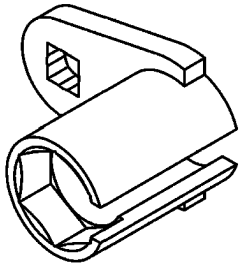

O2S (Oxygen Sensor) Remover/Installer - 8439

ACCELERATOR PEDAL

REMOVAL

(1) Remove the throttle cable from the throttle body cam as described in Throttle Cable of this section.

(2) Reach behind the top of the pedal shaft and push the retainer toward rear of vehicle (Fig. 1) . It may be necessary to squeeze retainer ears together on dash side of pedal shaft.

(3) Lift cable up through slot in top of pedal shaft.

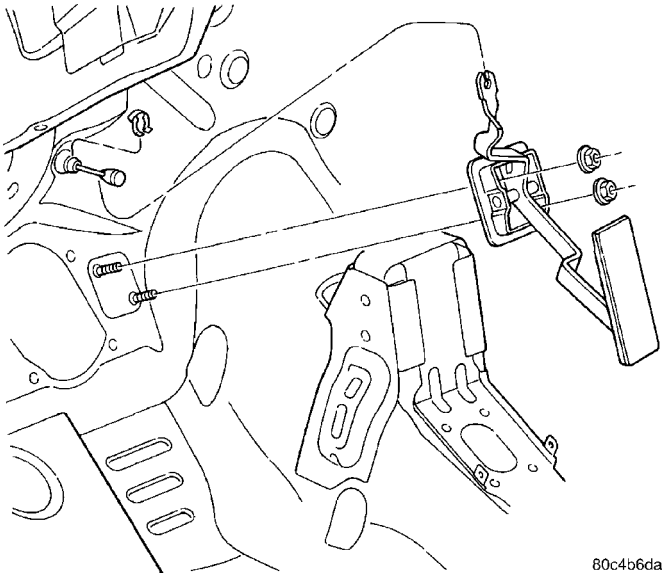

Fig. 1 Accelerator Pedal and Throttle Cable

(4) Remove nuts from accelerator pedal assembly studs. Remove assembly from vehicle.

ACCELERATOR PEDAL (Continued)

INSTALLATION

(1) Position accelerator pedal assembly on dash panel. Install retaining nuts. Tighten retaining nuts to 12 N·m (105 in. lbs.) torque.

(2) Place cable through slot in top of pedal shaft.

(3) While holding pedal lever, Push retainer clip forward in vehicle engaging it into the pedal lever.

(4) Hold the throttle body lever in the wide open position and install the throttle cable.

ACCELERATOR PEDAL POSITION SENSOR - 1.6L

DESCRIPTION

The Accelerator Pedal Position Sensor (APPS) is a variable resistor that provides the PCM with an input signal (voltage) (Fig. 2). The signal represents throttle blade position. As the position of the accelerator pedal changes, the resistance of the APPS changes (Fig. 3).

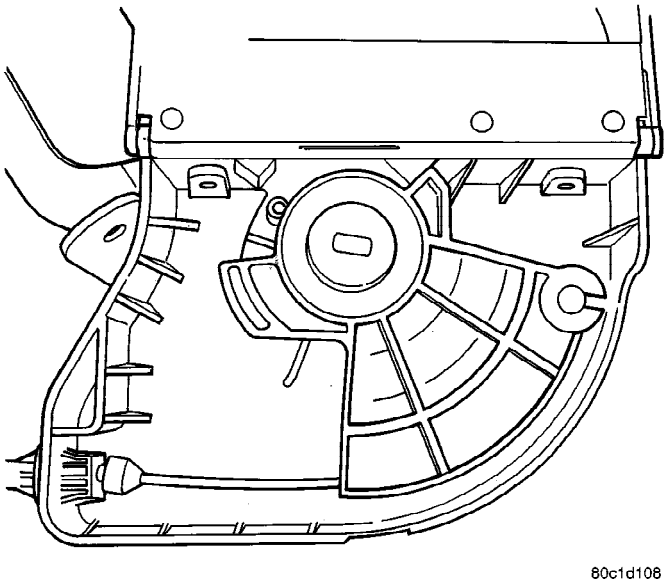

Fig. 3 ASSP MODULE OPEN

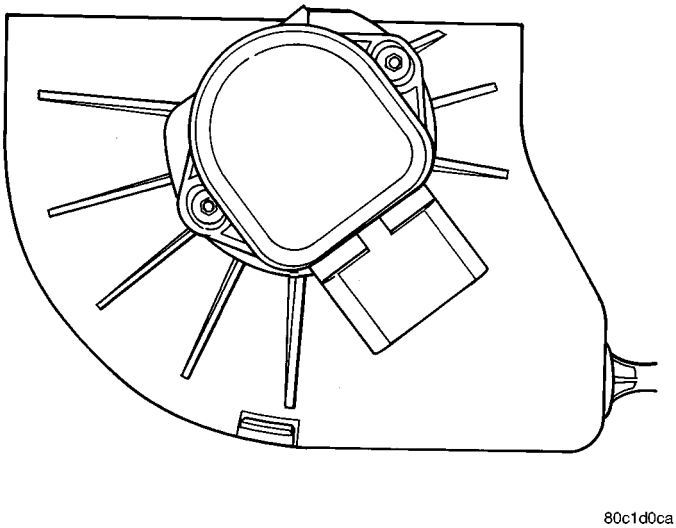

Fig. 2 APPS MODULE

REMOVAL - LHD

(1) Remove the air cleaner cover.

(2) Disconnect the negative battery cable.

(3) Unlock the electrical connector and then disconnect the electrical connector from the module (Fig. 4).

(4) Remove the mounting bolt.

(5) Remove assembly from the mountng bracket.

(6) Open the APPS module cover and disconnect the cable from the cam and module.

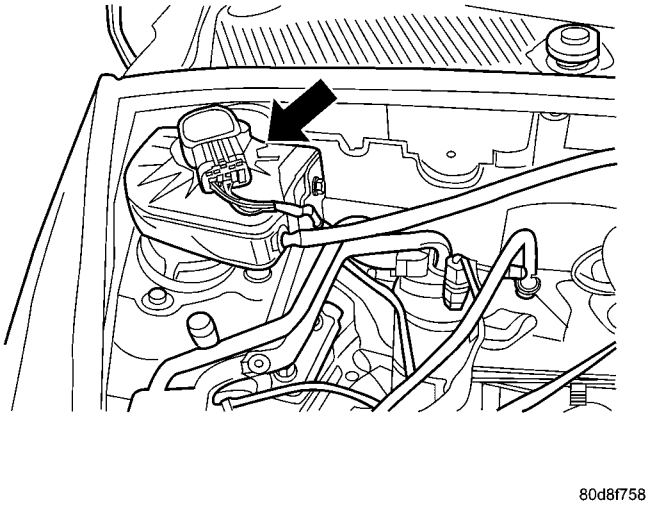

Fig. 4 PEDAL POSITION SENSOR

INSTALLATION - LHD

(1) Open APPS module and connect the cable (Fig. 4).

(2) Install APPS module.

(3) Tighten the mounting bolt.

(4) Connect the negative battery cable.

(5) Install the air cleaner cover.

CRANKSHAFT POSITION SENSOR

DESCRIPTION

The crankshaft position sensor mounts to the engine block behind the generator, just above the oil filter (Fig. 5).

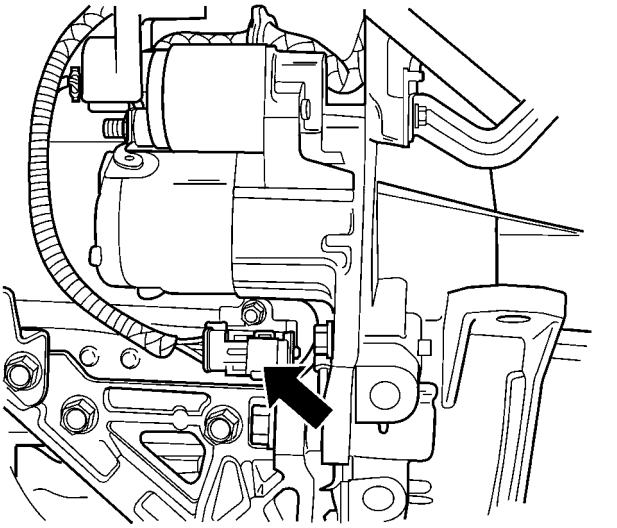

Fig. 5 Crankshaft Position Sensor

The PCM uses the Crankshaft Position sensor to calculate the following:

- Engine RPM
- TDC number 1 and 4
- Ignition coil synchronization
- Injector synchronization
- Camshaft-to-crankshaft misalignment (Timing belt skipped 1 tooth or more diagnostic trouble code).

OPERATION

The PCM sends approximately 5 volts to the Hall-effect sensor. This voltage is required to operate the Hall-effect chip and the electronics inside the sensor. A ground for the sensor is provided through the sensor return circuit. The input to the PCM occurs on a 5 volt output reference circuit that operates as follows: The Hall-effect sensor contains a powerful magnet. As the magnetic field passes over the dense portion of the counterweight, the 5-volt signal is pulled to ground (.3 volts) through a transistor in the sensor. When the magnetic field passes over the notches in the crankshaft counterwieght, the magnetic field turns off the transistor in the sensor, causing the PCM to register the 5-volt signal. The PCM identifies crankshaft position by registering the change from 5 to 0 volts, as signaled from the Crankshaft Position sensor.

The PCM determines what cylinder to fire from the crankshaft position sensor (Fig. 6) input and the camshaft position sensor input. The #8 crankshaft counterweight has a target ring with 32 teeth and notches, including one long referance tooth and notch. From the crankshaft position sensor input the PCM determines engine speed and crankshaft angle (position).

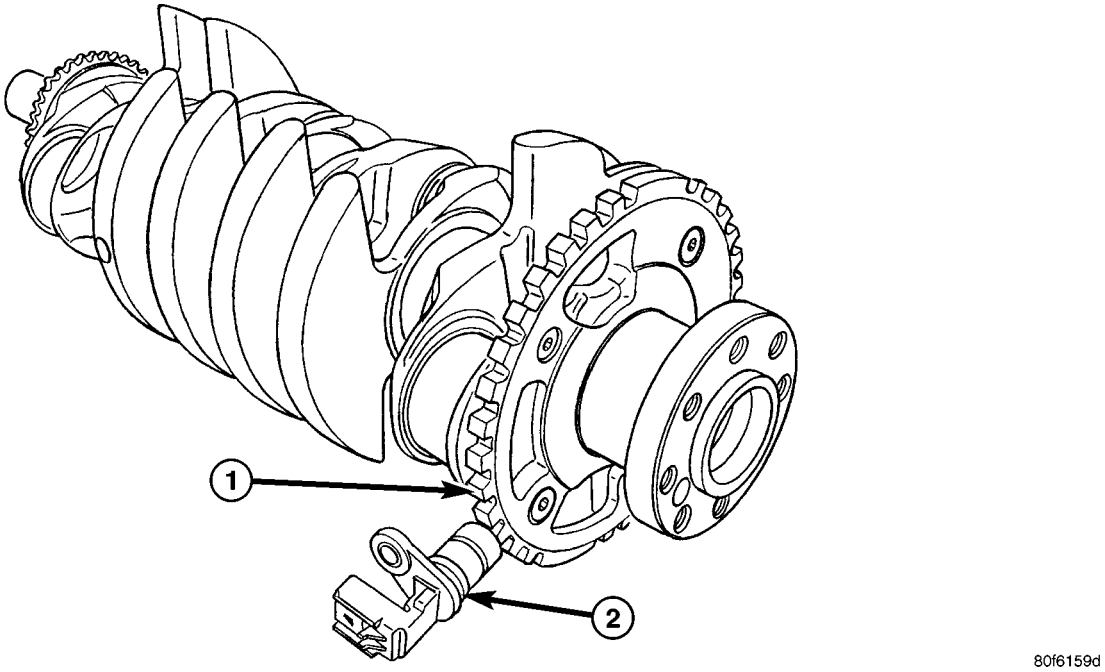

Fig. 6 TIMING REFERENCE NOTCHES (NGC)

1 - Crankshaft
2 - Crankshaft Position Sensor

CRANKSHAFT POSITION SENSOR (Continued)

REMOVAL

REMOVAL - 1.6L

(1) Disconnect the negative battery cable
(2) Raise vehicle and support.
(3) Disconnect the electrical connector (Fig. 7).

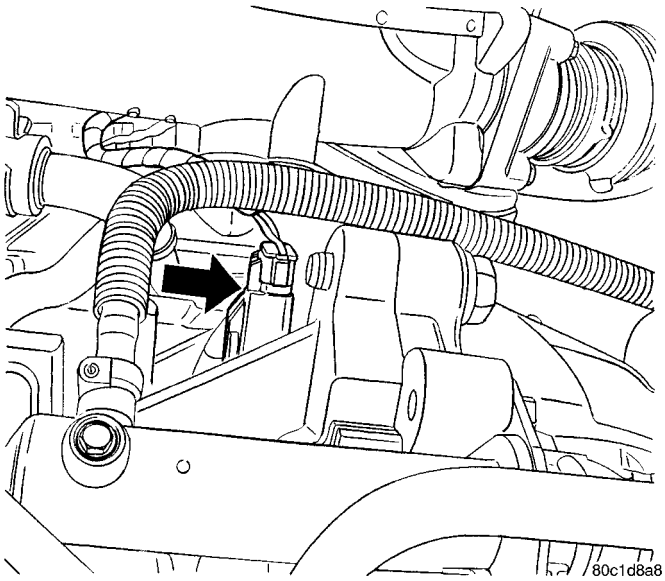

Fig. 7 CRANKSHAFT SENSOR LOCATION

(4) Remove bolt from Crankshaft sensor.
(5) Remove sensor (Fig. 8).

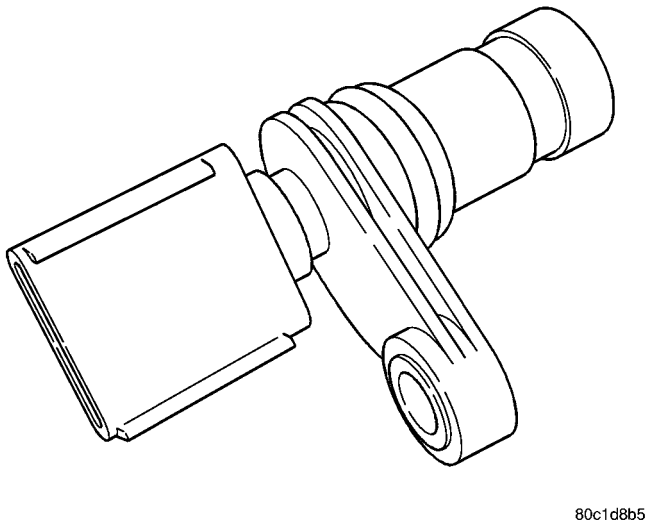

Fig. 8 CRANKSHAFT POSITION SENSOR

REMOVAL - 2.0, 2.4, 2.4L TURBO

The Crankshaft Position Sensor is in the front of the engine block just under the starter motor (Fig. 9).

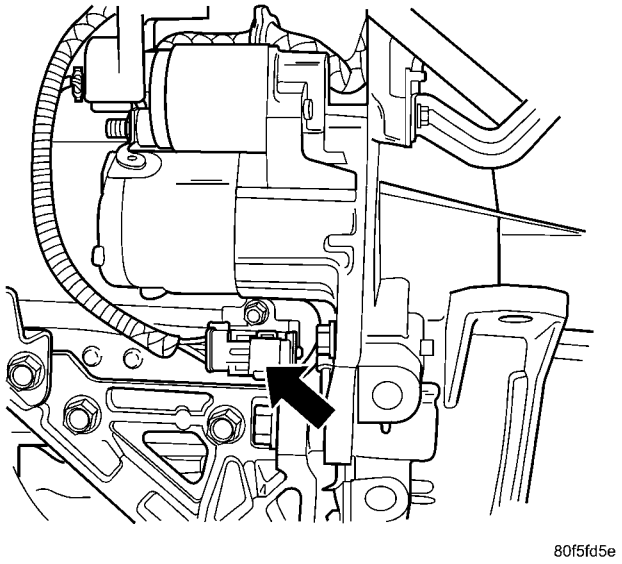

Fig. 9 CRANKSHAFT POSITION SENSOR LOCATION

(1) Disconnect the negative battery cable.
(2) Raise vehicle and support.
(3) Remove the Structural Collar (Fig. 10), refer to the Engine, Structural Collar Removal and Installation section.

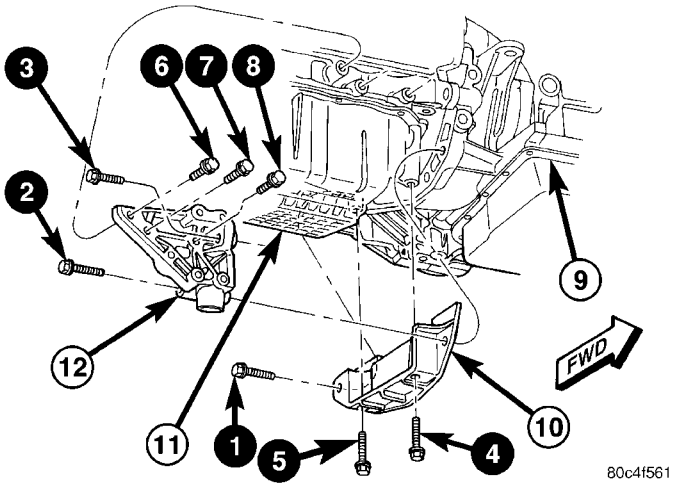

Fig. 10 Structural Collar and Bending Strut— (Automatic Transaxle Equipped)

1–8 – BOLT TIGHTENING SEQUENCE
9 – TRANSAXLE
10 – COLLAR
11 – OIL PAN
12 – STRUT

CRANKSHAFT POSITION SENSOR (Continued)

(4) Unlock and disconnect the electrical connector to the crankshaft position sensor.
(5) Remove the crankshaft position sensor bolt.
(6) Remove the sensor (Fig. 11).

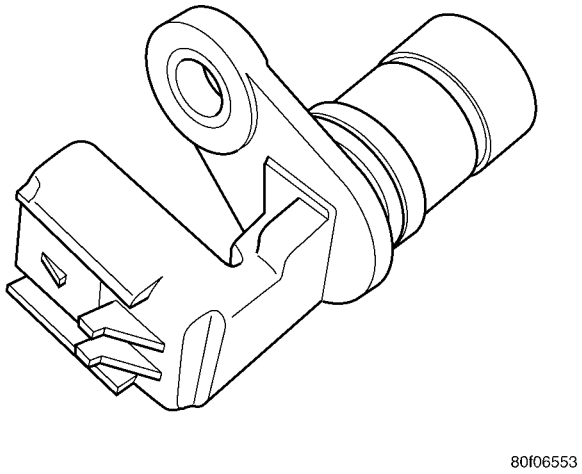

Fig. 11 CRANKSHAFT POSITION SENSOR - 2.4 L TURBO

INSTALLATION

INSTALLATION - 1.6L

(1) Install the Crankshaft sensor (Fig. 7).
(2) Install bolt and tighten to 10 N·m (90 in. lbs.).
(3) Connect the electrical connector (Fig. 8).
(4) Lower vehicle.
(5) Connect the negative battery cable.

INSTALLATION - 2.0, 2.4, 2.4L Turbo

(1) Check o-ring for damage and lubricate the o-ring with engine oil before installing sensor (Fig. 11).
(2) Use a twisting motion when installing the sensor.
(3) Install and tighten the crankshaft position sensor bolt and tighten to 9 N·m (80 ±15 in. lbs.).
(4) Connect and lock the electrical connector to the crankshaft position sensor.
(5) Install the Structural Collar, refer to the Engine, Structural Collar Removal and Installation section (Fig. 10).
(6) Lower vehicle.
(7) Connect the negative battery cable.

FUEL INJECTOR

DESCRIPTION

The injectors are positioned in the intake manifold with the nozzle ends directly above the intake valve port (Fig. 12) .

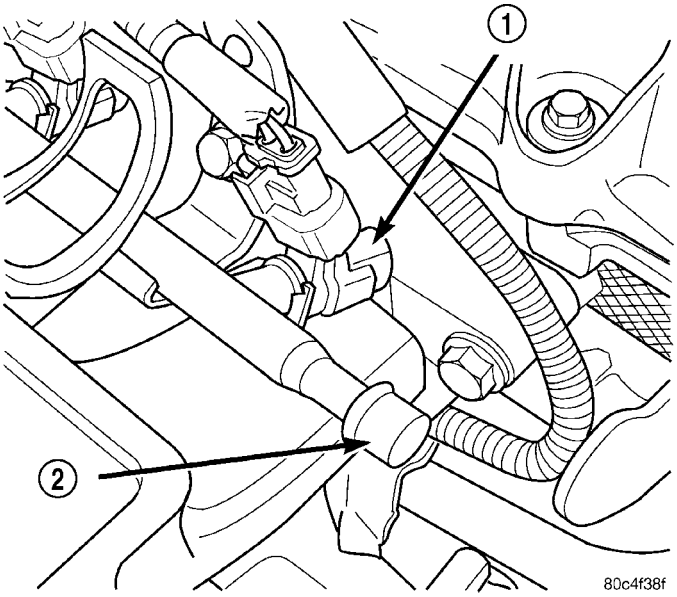

Fig. 12 Fuel Injector Location—Typical

1 - FUEL INJECTOR
2 - FUEL TEST PORT

OPERATION

The fuel injectors are 12 volt electrical solenoids (Fig. 13). The injector contains a pintle that closes off an orifice at the nozzle end. When electric current is supplied to the injector, the armature and needle move a short distance against a spring, allowing fuel to flow out the orifice. Because the fuel is under high pressure, a fine spray is developed in the shape of a hollow cone or two streams. The spraying action atomizes the fuel, adding it to the air entering the combustion chamber. Fuel injectors are not interchangeable between engines.

The PCM provides battery voltage to each injector through the ASD relay. Injector operation is controlled by a ground path provided for each injector by the PCM. Injector on-time (pulse-width) is variable, and is determined by the PCM processing all the data previously discussed to obtain the optimum injector pulse width for each operating condition. The pulse width is controlled by the duration of the ground path provided.

FUEL INJECTOR (Continued)

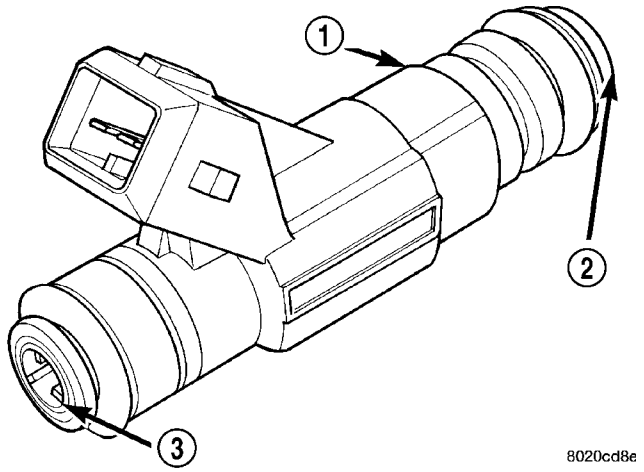

Fig. 13 FUEL INJECTOR - TYPICAL

1 - FUEL INJECTOR
2 - NOZZLE
3 - TOP (FUEL ENTRY)

STANDARD PROCEDURE

REMOVAL - INJECTOR CONNECTOR

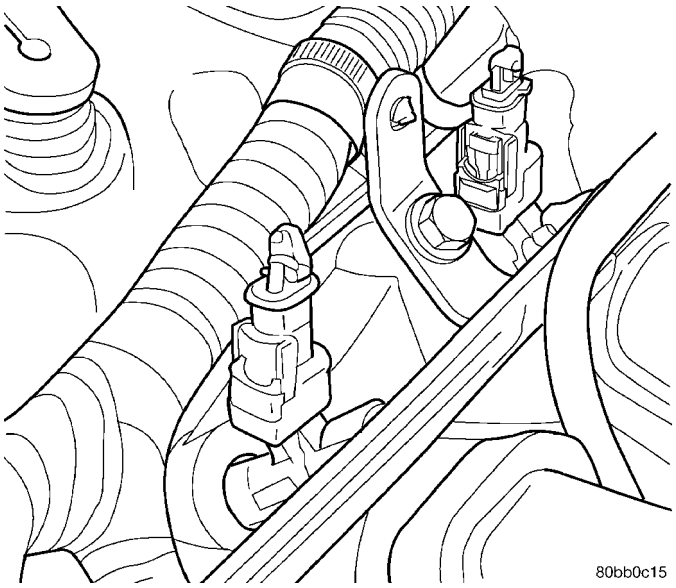

Fig. 14 Fuel Injectors

(1) Disconnect electrical connectors at the fuel injectors (Fig. 14). To remove connector refer to (Fig. 15). Pull the red colored slider away from injector (1). While pulling the slider, depress tab (2) and remove connector (3) from injector. The factory fuel injection wiring harness is numerically tagged (INJ 1, INJ 2, etc.) for injector position identification. If harness is not tagged, make note of wiring location before removal.

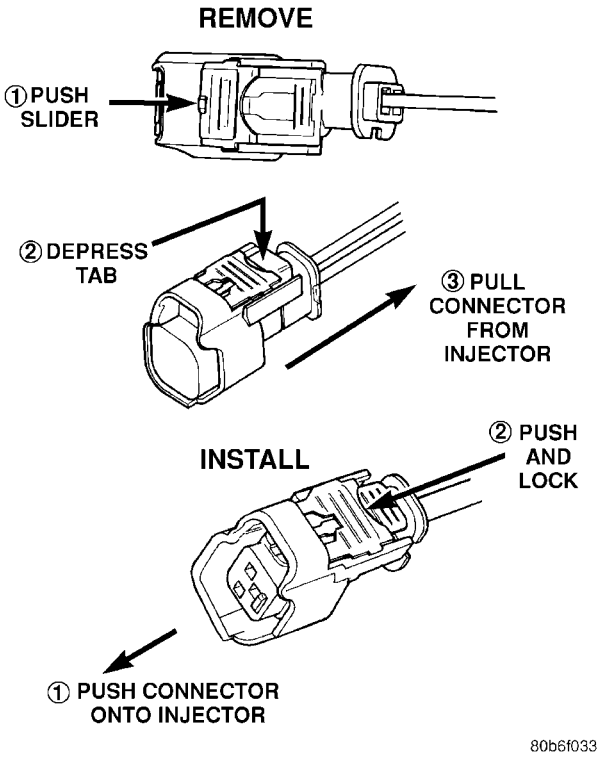

Fig. 15 Remove/Install Injector Connector

REMOVAL

REMOVAL - 2.0, 2.4L

WARNING: RELEASE FUEL SYSTEM PRESSURE BEFORE SERVICING FUEL SYSTEM COMPONENTS. SERVICE VEHICLES IN WELL VENTILATED AREAS AND AVOID IGNITION SOURCES. NEVER SMOKE WHILE SERVICING THE VEHICLE.

(1) Release fuel system pressure. Refer to Fuel System Pressure Release procedure in this section.
(2) Remove the air cleaner lid, disconnect the inlet air temperature sensor and makeup air hose.
(3) Remove the negative battery cable.
(4) Remove the engine cover or throttle control shield if equipped.

WARNING: WRAP SHOP TOWELS AROUND HOSE TO CATCH ANY GASOLINE SPILLAGE.

(5) Disconnect fuel supply tube from rail. Refer to Quick-Connect Fittings in this section.
(6) Remove the Intake Manifold, refer to the Engine section.
(7) Disconnect electrical connectors from fuel injectors.
(8) Remove bolts holding fuel rail (Fig. 16).
(9) Remove the fuel rail and injectors.
(10) Remove injectors from the fuel rail.

FUEL INJECTOR (Continued)

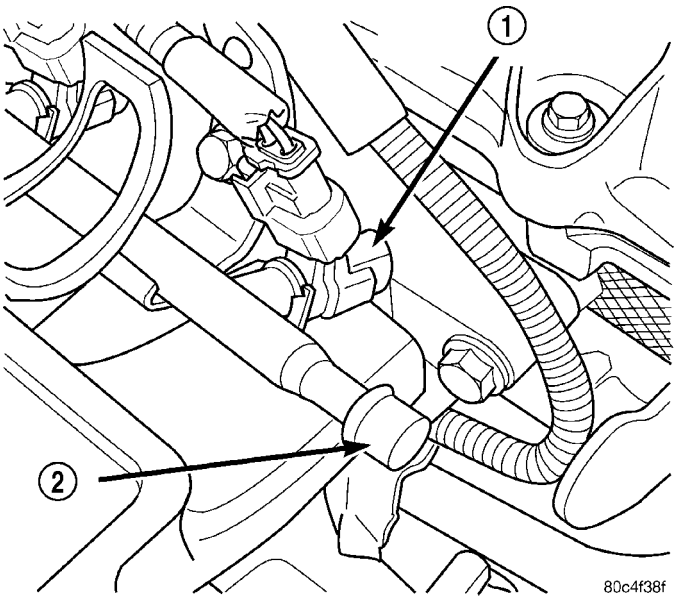

Fig. 16 Fuel Rail

1 - FUEL INJECTOR
2 - FUEL TEST PORT

REMOVAL - 1.6L

(1) Release the fuel pressure, refer to the fuel pressure release procedure.

(2) Remove air cleaner assembly cover.

(3) Disconnect the negative battery cable.

(4) Disconnect the electrical connectors from the fuel injectors (Fig. 17)

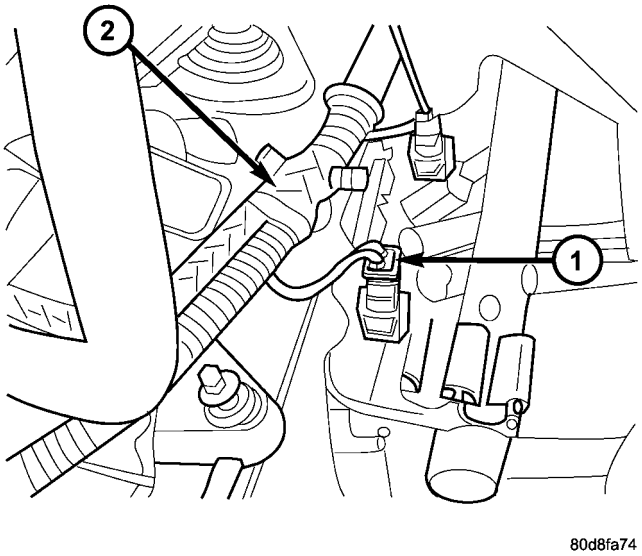

Fig. 17 INJECTOR CONNECTOR AND WIRING HARNESS

1 - FUEL INJECTOR ELECTRICAL CONNECTOR
2 - WIRING HARNESS

(5) Remove the wiring harness from the fuel rail brackets.

(6) Remove the fuel line from the fuel rail (Fig. 18).

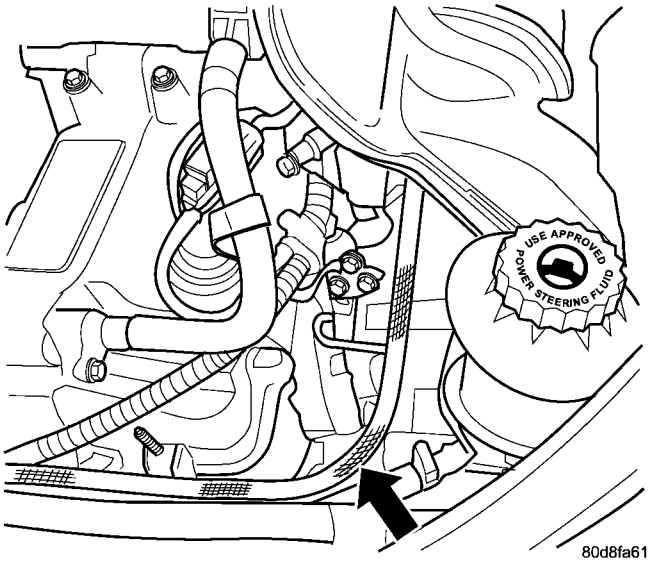

Fig. 18 FUEL LINE

(7) Remove the 2 bolts to the fuel rail at the lower manifold.

(8) Remove the fuel rail (Fig. 19)

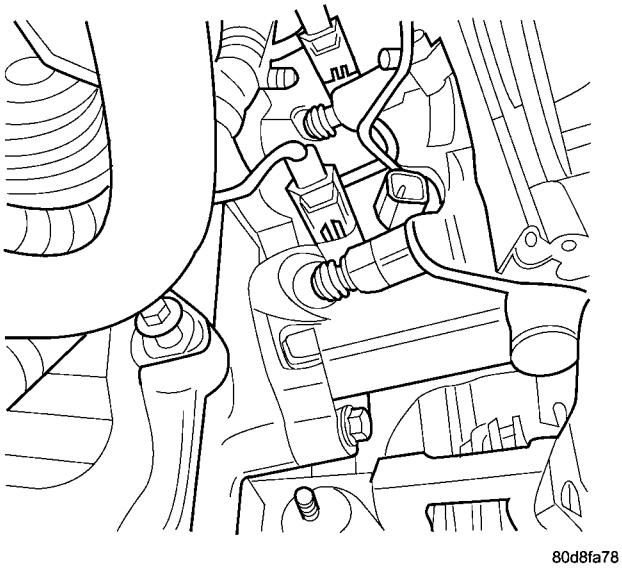

Fig. 19 FUEL RAIL AND FUEL INJECTOR

REMOVAL - 2.4L TURBO

WARNING: RELEASE FUEL SYSTEM PRESSURE BEFORE SERVICING FUEL SYSTEM COMPONENTS. SERVICE VEHICLES IN WELL VENTILATED AREAS AND AVOID IGNITION SOURCES. NEVER SMOKE WHILE SERVICING THE VEHICLE.

(1) Release the fuel system pressure. Refer to Fuel System Pressure Release procedure in this section.

FUEL INJECTOR (Continued)

(2) Disconnect the negative battery cable.

(3) Disconnect the throttle body inlet hose (Fig. 20) and remove from throttle body.

(4) Disconnect the purge hose from the throttle body (Fig. 20).

(5) Unlock and disconnect the electrical connection at the throttle body (Fig. 20).

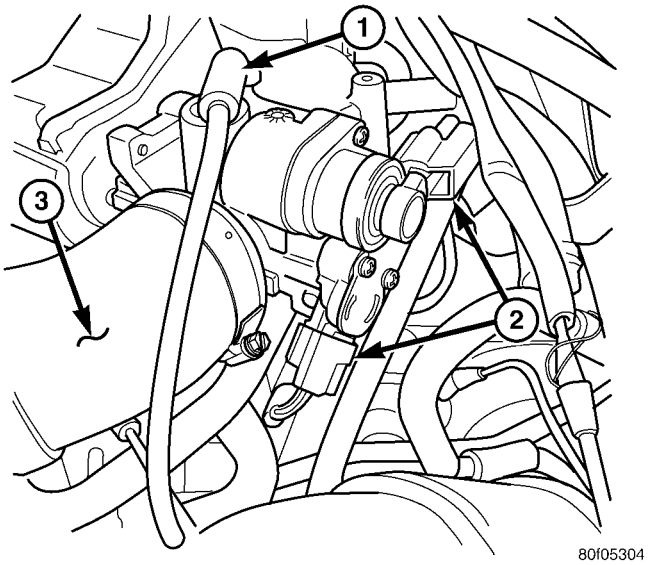

Fig. 20 THROTTLE BODY CONNECTIONS - 2.4L TURBO

1 - Purge Hose
2 - Electrical Connections
3 - Inlet Hose

(6) Remove the throttle control shield (Fig. 21).

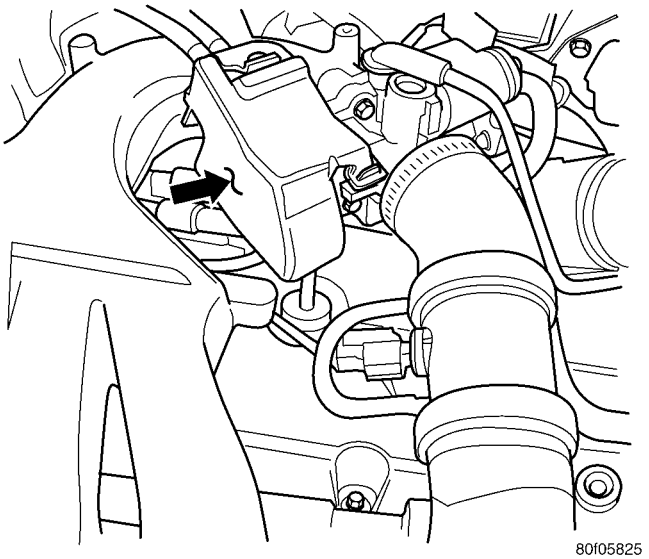

Fig. 21 THROTTLE CONTROL SHIELD - 2.4L TURBO

(7) Remove the throttle and speed control cables from the throttle body.

(8) Remove the cables from the throttle body bracket.

(9) Unlock and disconnect the MAP sensor electrical connector (Fig. 22).

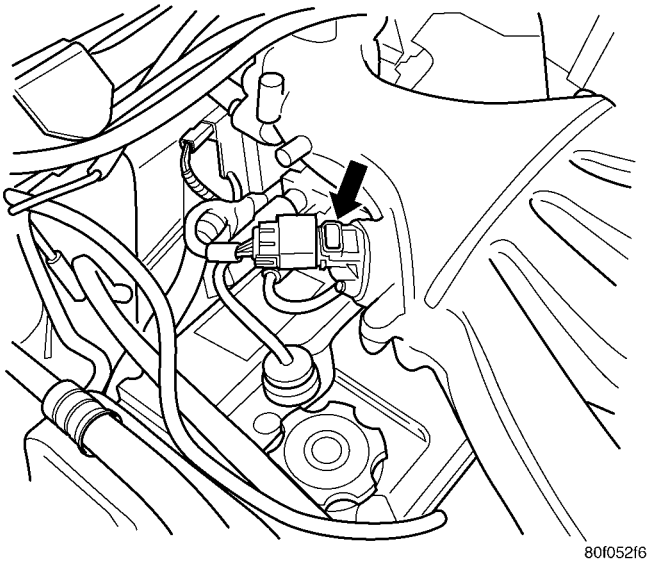

Fig. 22 MAP SENSOR - 2.4L TURBO

(10) Remove the vacuum lines from the rear of the intake manifold (Fig. 23).

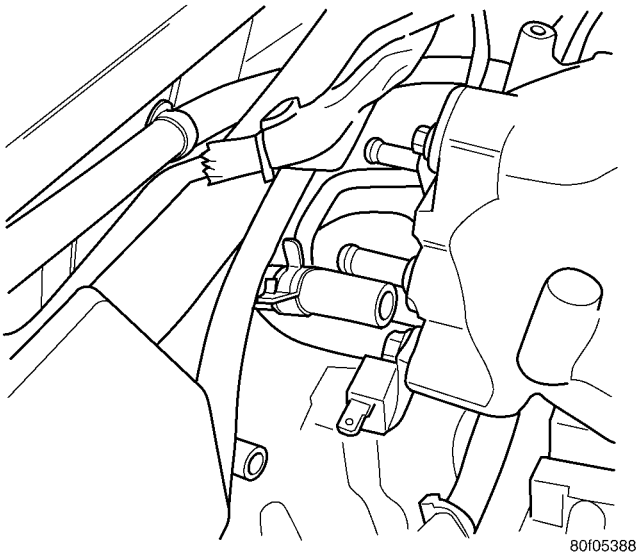

Fig. 23 VACUUM LINES - 2.4L TURBO

FUEL INJECTOR (Continued)

(11) Remove the 5 bolts from the front of the intake manifold.

(12) Remove the 2 bolts from the rear of the intake manifold (Fig. 23).

(13) Remove the intake manifold. Cover the lower intake manifold openings (Fig. 24).

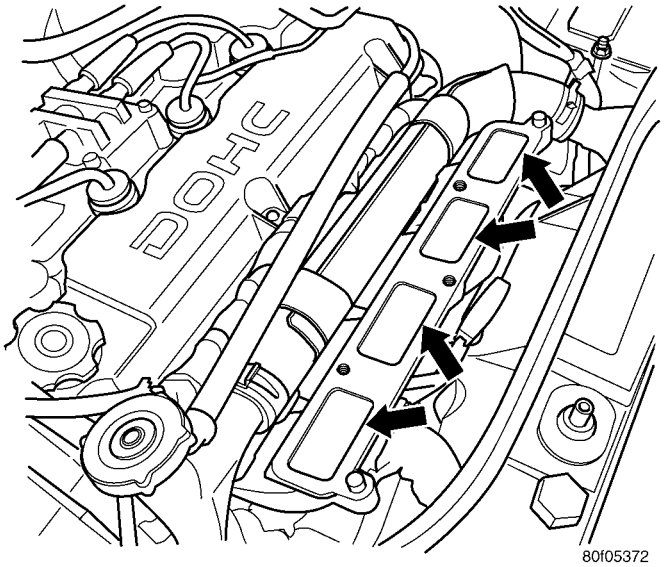

Fig. 24 LOWER INTAKE MANIFOLD - 2.4L TURBO

(14) Drain the Coolant system, refer to the Cooling section for more information.

(15) Move the upper radiator hose clamp (Fig. 25), so that the hose can be rotated up and out of the way.

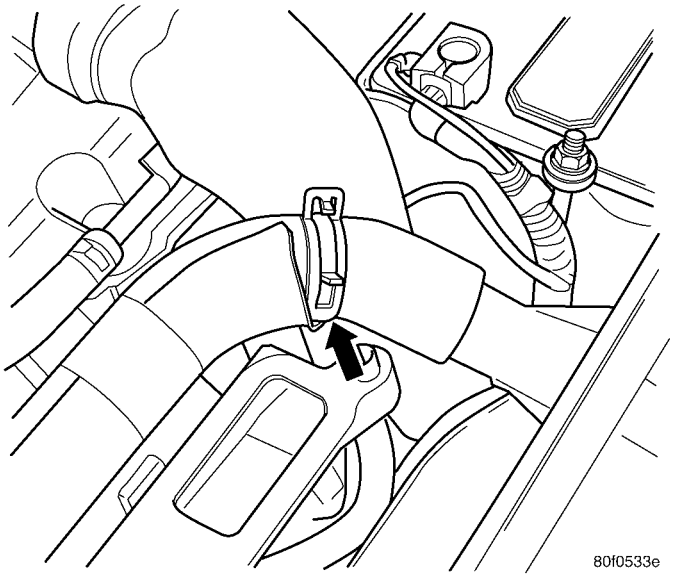

Fig. 25 UPPER RADIATOR HOSE CLAMP - 2.4L TURBO

(16) Remove the 2 small hoses from the thermostat housing (Fig. 26).

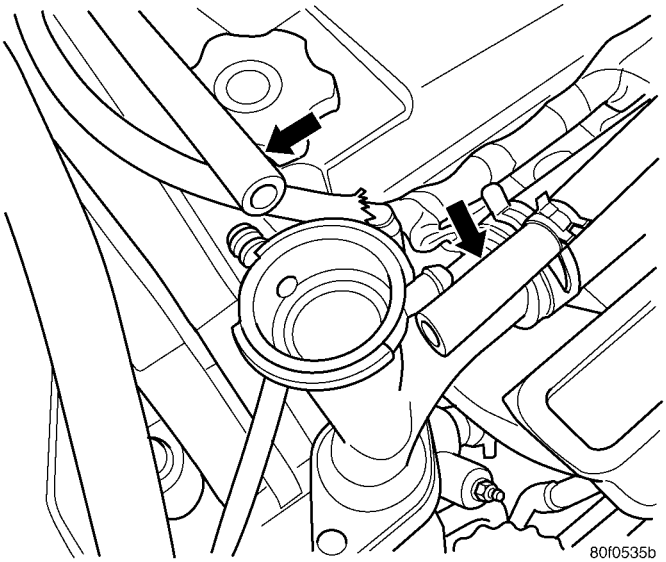

Fig. 26 SMALL HOSES AT HOUSING - 2.4L TURBO

(17) Remove the 2 bolts from the thermostat housing (Fig. 27)and rotate the assembly up and out of the way (Fig. 28).

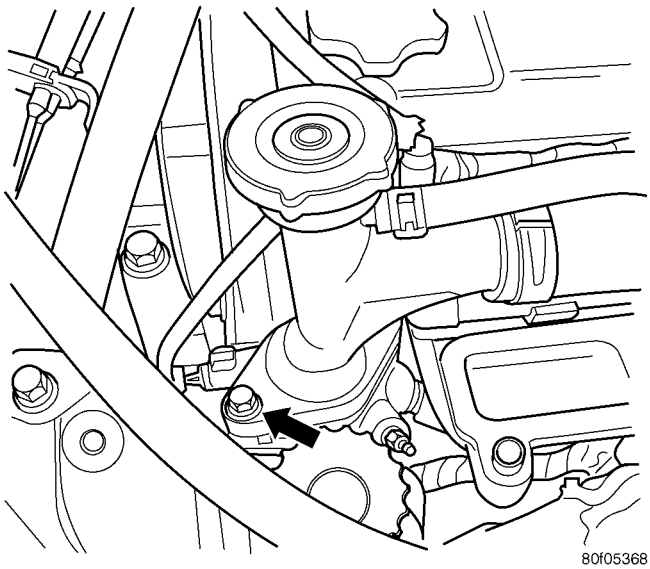

Fig. 27 THERMOSTAT HOUSING - 2.4L TURBO

FUEL INJECTOR (Continued)

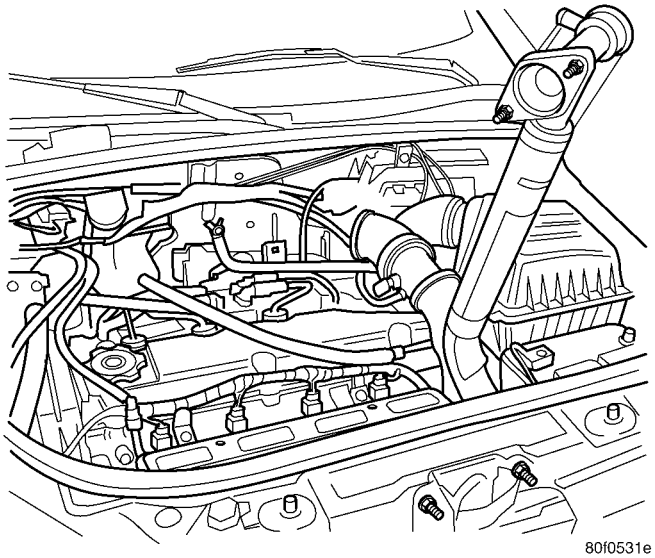

Fig. 28 HOSE AND HOUSING ROTATED - 2.4L TURBO

WARNING: WRAP SHOP TOWELS AROUND HOSE TO CATCH ANY GASOLINE SPILLAGE.

(18) Disconnect the fuel line from the fuel rail (Fig. 29). Refer to the Quick-Connect Fittings in this section.

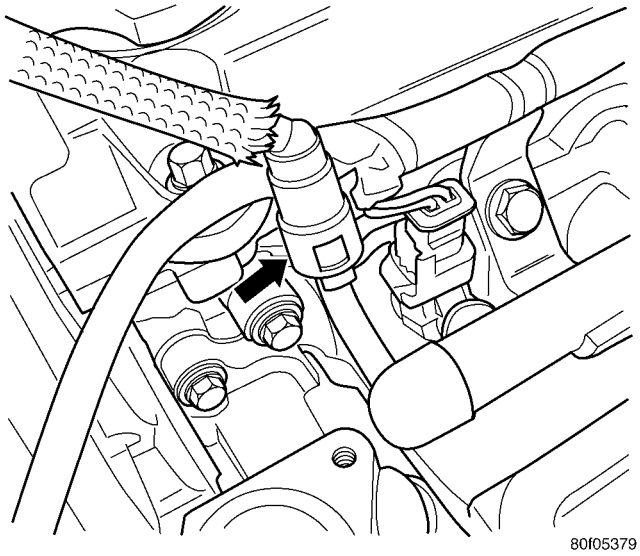

Fig. 29 FUEL LINE CONNECTION - 2.4L TURBO

(19) Unlock and disconnect the electrical connectors from the fuel injectors.

(20) Remove the wiring harness from the fuel rail (Fig. 30).

(21) Remove the 2 bolts from the fuel rail (Fig. 30).

(22) Remove the fuel rail and injectors from the intake manifold (Fig. 31).

(23) Remove the fuel injector from the fuel rail.

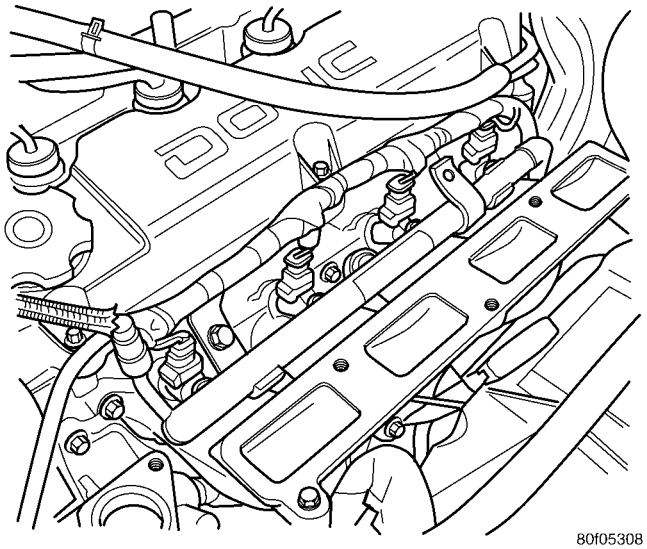

Fig. 30 FUEL RAIL - 2.4L TURBO

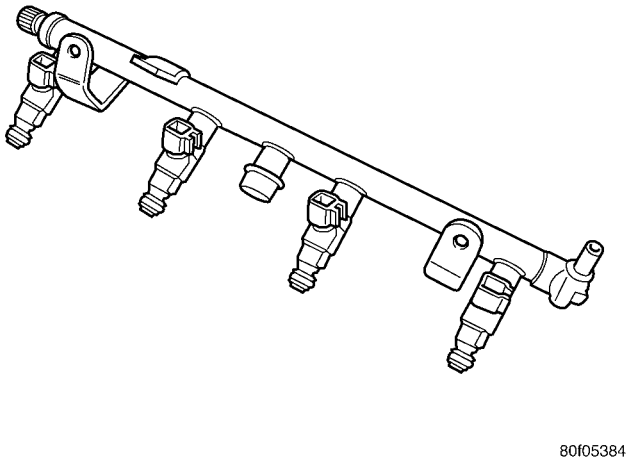

Fig. 31 FUEL RAIL & INJECTORS - 2.4L TURBO

INSTALLATION

INSTALLATION - 2.0, 2.4L

(1) Install the fuel injectors to the fuel rail.

(2) Apply a light coating of clean engine oil to the O-ring on the nozzle end of each injector.

(3) Insert fuel injector nozzles into openings in intake manifold. Seat the injectors in place. Tighten fuel rail bolts to 12 N·m (8 ft. lbs.) (Fig. 16).

(4) Attach electrical connectors to fuel injectors.

(5) Connect fuel supply tube to fuel rail. Refer to Quick Connect Fittings in the Fuel Delivery section

(6) Install Intake Manifold, refer to the Engine section.

FUEL INJECTOR (Continued)

(7) Install the engine cover or throttle control shield if equipped.

(8) Install the negative battery cable.

(9) Install the air cleaner lid, connect the inlet air temperature sensor and makeup air hose. Tighten air inlet tube clamps to 3 N·m ±1 (25 in. lbs. ±5) torque.

INSTALLATION - 1.6L

(1) Apply a light coating of clean engine oil to the upper O-ring.

(2) Install injector in cup on fuel rail.

(3) Install retaining clip.

(4) Apply a light coating of clean engine oil to the O-ring on the nozzle end of each injector.

(5) Insert fuel injector nozzles into openings in lower intake manifold (Fig. 19). Seat the injectors in place. Tighten fuel rail mounting screws to 22.5 N·m ± 3 N·m (200±30 in. lbs.).

(6) Attach electrical connectors to fuel injectors (Fig. 17), refer to the fuel injector connector section for electrical connector installation.

(7) Connect fuel supply tube to fuel rail (Fig. 18). Refer to Quick Connect Fittings in the Fuel Delivery Section of this Group.

(8) Install the wiring harness to the fuel rail brackets.

(9) Connect the negative battery cable.

(10) Use the DRB scan tool ASD Fuel System Test to pressurize the fuel system. Check for leaks.

(11) Install air cleaner assembly cover.

INSTALLATION - 2.4L TURBO

(1) Apply a light coating of clean engine oil to the upper O-ring.

(2) Install injector in cup on fuel rail.

(3) Install retaining clip.

(4) Install the fuel injectors to the fuel rail (Fig. 25).

(5) Apply a light coating of clean engine oil to the O-ring on the nozzle end of each injector.

(6) Insert fuel injector nozzles into openings in intake manifold. Seat the injectors in place.

(7) Install the 2 bolts to the fuel rail (Fig. 24). Tighten fuel rail bolts to 22.5 ±3 N·m (200 ±30 in. lbs.)

(8) Install the wiring harness to the fuel rail (Fig. 24).

(9) Connect and lock the electrical connectors to the fuel injectors.

(10) Connect the fuel line to the fuel rail (Fig. 23). Refer to Quick Connect Fittings in the Fuel Delivery Section of this Group.

(11) Rotate the assembly back into place and install the 2 bolts to the thermostat housing tighten to N·m (in. lbs.).

(12) Move the upper radiator house clamp back into place (Fig. 19).

(13) Install the 2 small hoses to the thermostat housing (Fig. 20).

(14) Fill the Coolant system, refer to the Cooling section for more information.

(15) Install the intake manifold, refer to the Engine section.

(16) Install the 2 bolts to the rear of the intake manifold (Fig. 17) tighten to N·m (in. lbs.).

(17) Install the 5 bolts to the front of the intake manifold and tighten to N·m (in. lbs.).

(18) Install the vacuum lines to the rear of the intake manifold (Fig. 17).

(19) Connect and lock the MAP sensor electrical connector (Fig. 16).

(20) Install the cables to the throttle body bracket.

(21) Install the throttle and speed control cables to the throttle body.

(22) Install the throttle control shield (Fig. 15).

(23) Connect and lock the electrical connections at the throttle body (Fig. 14).

(24) Connect the purge hose to the throttle body (Fig. 14).

(25) Connect the throttle body inlet hose to the throttle body (Fig. 14) and tighten clamps to 3 N·m ±1 (25 in. lbs. ±5) torque.

(26) Connect the negative battery cable.

(27) Use the DRB scan tool ASD Fuel System Test to pressurize the fuel system. Check for leaks.

FUEL PUMP RELAY

DESCRIPTION

The fuel pump relay is located in the PDC. The inside top of the PDC cover has a label showing relay and fuse location.

OPERATION

The fuel pump relay supplies battery voltage to the fuel pump. A buss bar in the Power Distribution Center (PDC) supplies voltage to the solenoid side and contact side of the relay. The fuel pump relay power circuit contains a fuse between the buss bar in the PDC and the relay. The fuse is located in the PDC. Refer to the Wiring Diagrams for circuit information.

The PCM controls the fuel pump relay by switching the ground path for the solenoid side of the relay on and off. The PCM turns the ground path off when the ignition switch is in the Off position. When the ignition switch is in the On position, the PCM energizes the fuel pump. If the crankshaft position sensor does not detect engine rotation, the PCM de-energizes the relay after approximately one second.

IDLE AIR CONTROL MOTOR

DESCRIPTION

The Idle Air Control (IAC) motor is mounted on the throttle body. The PCM operates the idle air control motor (Fig. 32) or (Fig. 33).

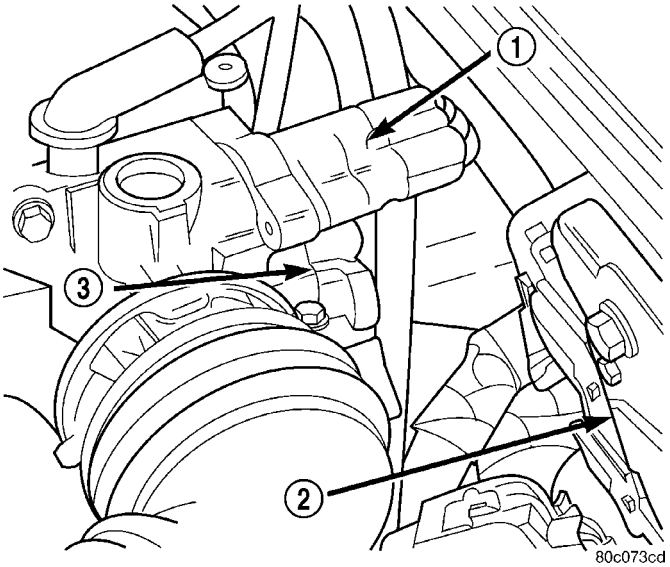

Fig. 32 Idle Air Control Motor—2.4L

1 - IAC
2 - PCM
3 - TPS

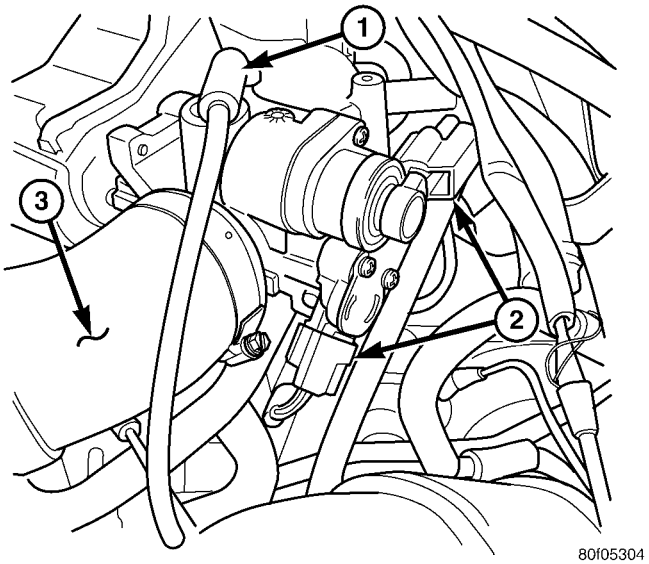

Fig. 33 THROTTLE BODY CONNECTIONS - 2.4L TURBO

1 - Purge Hose
2 - Electrical Connections
3 - Inlet Hose

OPERATION

The PCM adjusts engine idle speed through the idle air control motor to compensate for engine load, coolant temperature or barometric pressure changes.

The throttle body has an air bypass passage that provides air for the engine during closed throttle idle. The idle air control motor pintle protrudes into the air bypass passage and regulates air flow through it.

The PCM adjusts engine idle speed by moving the IAC motor pintle in and out of the bypass passage. The adjustments are based on inputs the PCM receives. The inputs are from the throttle position sensor, crankshaft position sensor, coolant temperature sensor, MAP sensor, vehicle speed sensor and various switch operations (brake, park/neutral, air conditioning).

When engine rpm is above idle speed, the IAC is used for the following functions:

- Off-idle dashpot
- Deceleration air flow control
- A/C compressor load control (also opens the passage slightly before the compressor is engaged so that the engine rpm does not dip down when the compressor engages)

Target Idle

Target idle is determined by the following inputs:

- Gear position
- ECT Sensor
- Battery voltage
- Ambient/Battery Temperature Sensor
- VSS
- TPS
- MAP Sensor

REMOVAL

When servicing throttle body components, always reassemble components with new O-rings and seals where applicable. Never use lubricants on O-rings or seals, damage may result. If assembly of component is difficult, use water to aid assembly. Use care when removing hoses to prevent damage to hose or hose nipple.

(1) Disconnect negative cable from battery.

(2) Remove electrical connector from idle air control motor.

(3) Remove idle air control motor mounting screws.

(4) Remove motor from throttle body. Ensure the O-rings is removed with the motor.

INSTALLATION

When servicing throttle body components, always reassemble components with new O-rings and seals where applicable. Never use lubricants on O-rings or seals, damage may result. If assembly of component is difficult, **a light coat of engine oil may be**

IDLE AIR CONTROL MOTOR (Continued)

applied to the O-RINGS ONLY (Fig. 34) to aid assembly. Use care when removing hoses to prevent damage to hose or hose nipple.

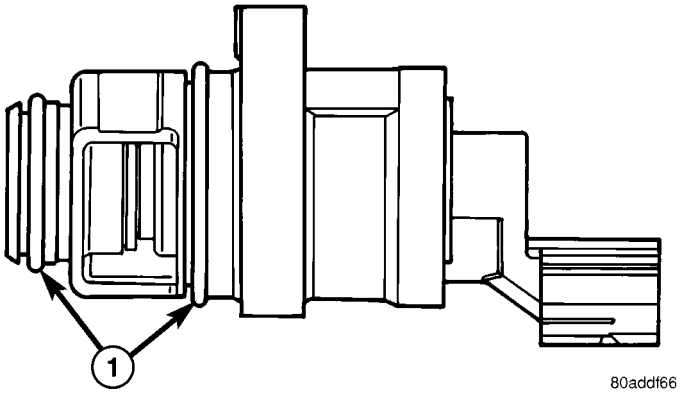

Fig. 34 O-RINGS

1 - O-rings

(1) The new idle air control motor has a new O-ring installed on it. For 2.4L only, if pintle measures more than 1 inch (25 mm) it must be retracted. Use the DRBIII® Idle Air Control Motor Open/Close Test to retract the pintle (battery must be connected.)

(2) Carefully place idle air control motor into throttle body.

(3) Install mounting screw(s). Tighten screws to 2 N·m (17 in. lbs.) torque.

(4) Connect electrical connector to idle air control motor.

(5) Connect negative cable to battery.

INLET AIR TEMPERATURE SENSOR

DESCRIPTION

The IAT Sensor is a Negative Temperature Coefficient (NTC) Sensor that provides information to the PCM regarding the temperature of the air entering the intake manifold (Fig. 35).

OPERATION

Inlet/Intake Air Temperature (NGC)

The Intake Air Temperature (IAT) sensor value is used by the PCM to determine air density.

The PCM uses this information to calculate:

- Injector pulse width
- Adjustment of ignition timing (to prevent spark knock at high intake air temperatures)

Battery Temperature (SBEC Vehicles without Battery Temperature sensor)

The inlet air temperature sensor replaces the intake air temperature sensor and the battery temperature sensor. The PCM uses the information from the inlet air temperature sensor to determine values for the PCM to use as an intake air temperature sensor and a battery temperature sensor.

The battery temperature information along with data from monitored line voltage (B+), is used by the PCM to vary the battery charging rate. System voltage will be higher at colder temperatures and is gradually reduced at warmer temperatures.

The battery temperature information is also used for OBD II diagnostics. Certain faults and OBD II monitors are either enabled or disabled depending upon the battery temperature sensor input (example: disable purge, enable LDP). Most OBD II monitors are disabled below 20°F.

REMOVAL

The sensor is located in the clean air duct.

(1) Unlatch or unbolt the air cleaner lid.

(2) Lift air cleaner lid and reposition.

(3) Disconnect the negative battery cable.

(4) Disconnect electrical connector from the sensor (Fig. 35).

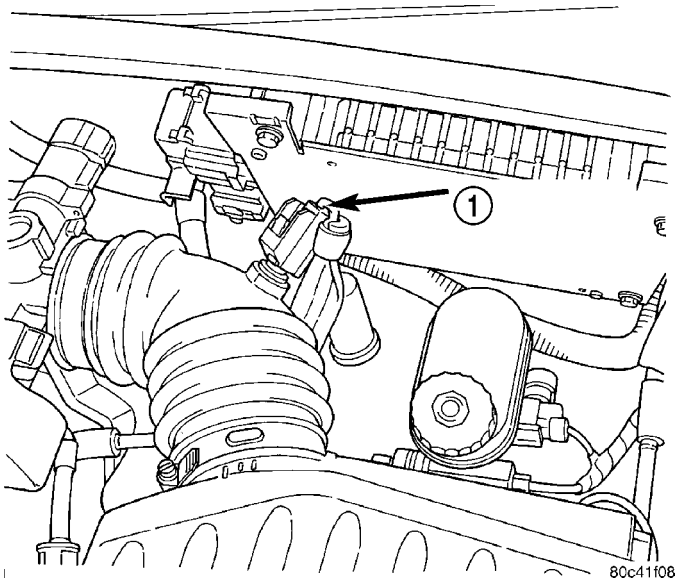

Fig. 35 Inlet Air Temperature Sensor

1 - INLET AIR TEMPERATURE SENSOR

(5) Remove the sensors.

INSTALLATION

The sensors is in the air inlet tube.

(1) Install sensor.

(2) Attach electrical connector to sensor.

(3) Connect the negative battery cable.

(4) Install the air cleaner lid..

MAP SENSOR

DESCRIPTION

The MAP sensor mounts to the intake manifold (Fig. 36) .

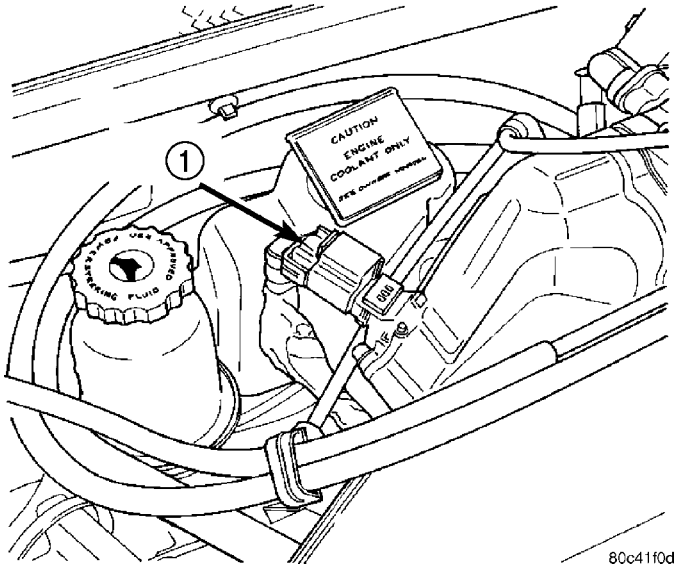

Fig. 36 MAP Sensor

1 - MAP SENSOR

OPERATION

The MAP serves as a PCM input, using a silicon based sensing unit, to provide data on the manifold vacuum that draws the air/fuel mixture into the combustion chamber. The PCM requires this information to determine injector pulse width and spark advance. When MAP equals Barometric pressure, the pulse width will be at maximum.

Also like the cam and crank sensors, a 5 volt reference is supplied from the PCM and returns a voltage signal to the PCM that reflects manifold pressure. The zero pressure reading is 0.5V and full scale is 4.5V. For a pressure swing of 0 — 15 psi the voltage changes 4.0V. The sensor is supplied a regulated 4.8 to 5.1 volts to operate the sensor. Like the cam and crank sensors ground is provided through the sensor return circuit.

The MAP sensor input is the number one contributor to pulse width. The most important function of the MAP sensor is to determine barometric pressure. The PCM needs to know if the vehicle is at sea level or is it in Denver at 5000 feet above sea level, because the air density changes with altitude. It will also help to correct for varying weather conditions. If a hurricane was coming through the pressure would be very, very low or there could be a real fair weather, high pressure area. This is important because as air pressure changes the barometric pressure changes. Barometric pressure and altitude have a direct inverse correlation, as altitude goes up barometric goes down. The first thing that happens as the key is rolled on, before reaching the crank position, the PCM powers up, comes around and looks at the MAP voltage, and based upon the voltage it sees, it knows the current barometric pressure relative to altitude. Once the engine starts, the PCM looks at the voltage again, continuously every 12 milliseconds, and compares the current voltage to what it was at key on. The difference between current and what it was at key on is manifold vacuum.

During key On (engine not running) the sensor reads (updates) barometric pressure. A normal range can be obtained by monitoring known good sensor in you work area.

As the altitude increases the air becomes thinner (less oxygen). If a vehicle is started and driven to a very different altitude than where it was at key On the barometric pressure needs to be updated. Any time the PCM sees Wide Open throttle, based upon TPS angle and RPM it will update barometric pressure in the MAP memory cell. With periodic updates, the PCM can make its calculations more effectively.

The PCM uses the MAP sensor to aid in calculating the following:

- Barometric pressure
- Engine load
- Manifold pressure
- Injector pulse-width
- Spark-advance programs
- Shift-point strategies (F4AC1 transmissions only, via the PCI bus)
- Idle speed
- Decel fuel shutoff

The PCM recognizes a decrease in manifold pressure by monitoring a decrease in voltage from the reading stored in the barometric pressure memory cell. The MAP sensor is a linear sensor; as pressure changes, voltage changes proportionately. The range of voltage output from the sensor is usually between 4.6 volts at sea level to as low as 0.3 volts at 26 in. of Hg. Barometric pressure is the pressure exerted by the atmosphere upon an object. At sea level on a standard day, no storm, barometric pressure is 29.92 in Hg. For every 100 feet of altitude barometric pressure drops .10 in. Hg. If a storm goes through it can either add, high pressure, or decrease, low pressure, from what should be present for that altitude. You should make a habit of knowing what the average pressure and corresponding barometric pressure is for your area.

MAP SENSOR (Continued)

REMOVAL

REMOVAL - 2.0, 2.4, 2.4L TURBO

The MAP sensor attaches to the intake manifold plenum (Fig. 37).

(1) Remove the air cleaner lid and makeup air hose.

(2) Remove the negative battery cable.

(3) Disconnect the electrical connector from the MAP sensor.

(4) Remove sensor mounting screws.

(5) Remove sensor.

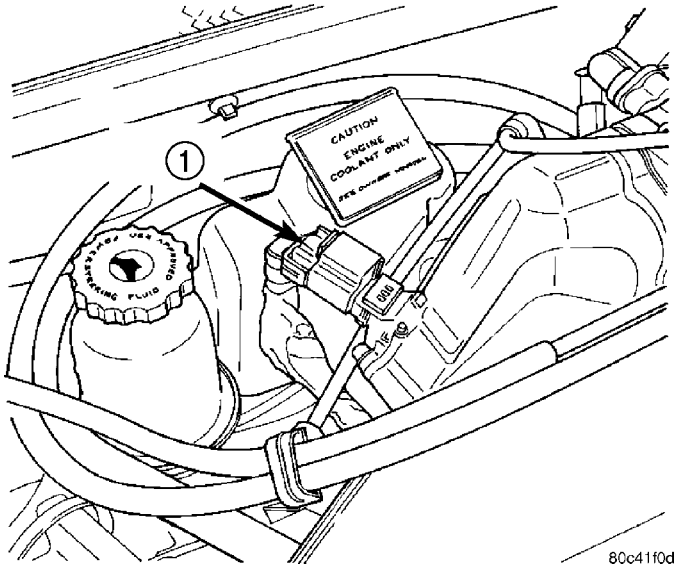

Fig. 37 MAP Sensor

1 - MAP SENSOR

REMOVAL - 1.6L

(1) Remove the air cleaner cover.

(2) Disconnect the negative battery cable.

(3) Disconnect the electrical connector from the MAP sensor (Fig. 38).

(4) Remove the screws from the MAP sensor.

(5) Remove the MAP sensor.

INSTALLATION

INSTALLATION - 2.0, 2.4, 2.4L Turbo

The MAP sensor attaches to the intake manifold plenum (Fig. 37).

(1) Insert sensor into intake manifold while making sure not to damage O-ring seal.

(2) Tighten mounting screws to 2 N·m (20 in. lbs) torque for plastic manifold.

(3) Attach electrical connector to sensor.

(4) Install the negative battery cable.

(5) Install the air cleaner lid and makeup air hose.

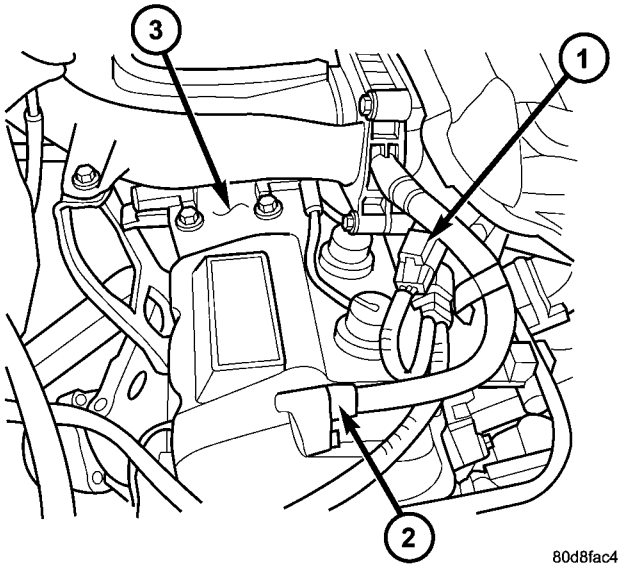

Fig. 38 IGNITION COIL, PCV, MAP SENSOR

1 - MAP Sensor
2 - PCV valve
3 - Ignition Coil

INSTALLATION - 1.6L

(1) Make sure that the manifold is clean.

(2) Install sensor to manifold (Fig. 38).

(3) Tighten screws.

(4) Connect the electrical connetor to the sensor.

(5) Connect the negative battery cable

(6) Install the air cleaner cover.

O2 SENSOR

DESCRIPTION

The upstream oxygen sensor (Fig. 41) threads into the outlet flange of the exhaust manifold (Fig. 39).

The downstream heated oxygen sensor threads into the system depending on emission package (Fig. 40). Federal package the O2s is mounted after the catalytic convertor.

OPERATION

For SBEC vehicles a single sensor ground is used for all 4 O2 sensors (6 Cyl.). A seperate upstream and downstream grounds are used on the NGC vehicles (4 Cyl.).

As vehicles accumulate mileage, the catalytic convertor deteriorates. The deterioration results in a less efficient catalyst. To monitor catalytic convertor deterioration, the fuel injection system uses two heated oxygen sensors. One sensor upstream of the catalytic convertor, one downstream of the convertor. The PCM compares the reading from the sensors to calculate the catalytic convertor oxygen storage capacity and converter efficiency. Also, the PCM uses

O2 SENSOR (Continued)

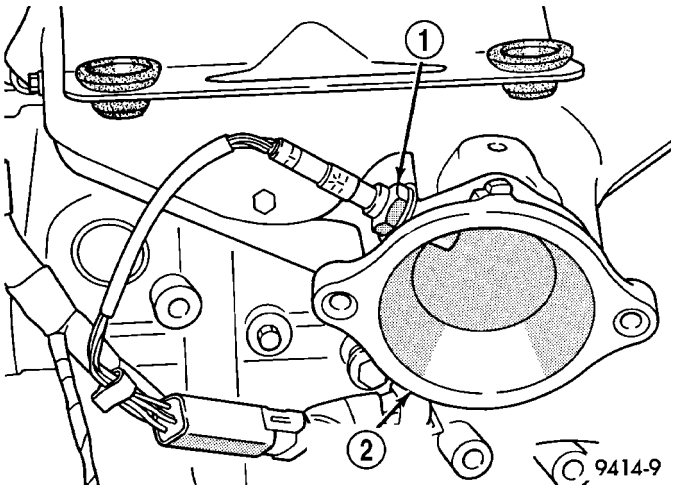

Fig. 39 Upstream Heated Oxygen Sensor 1/1

1 - OXYGEN SENSORS
2 - EXHAUST MANIFOLD

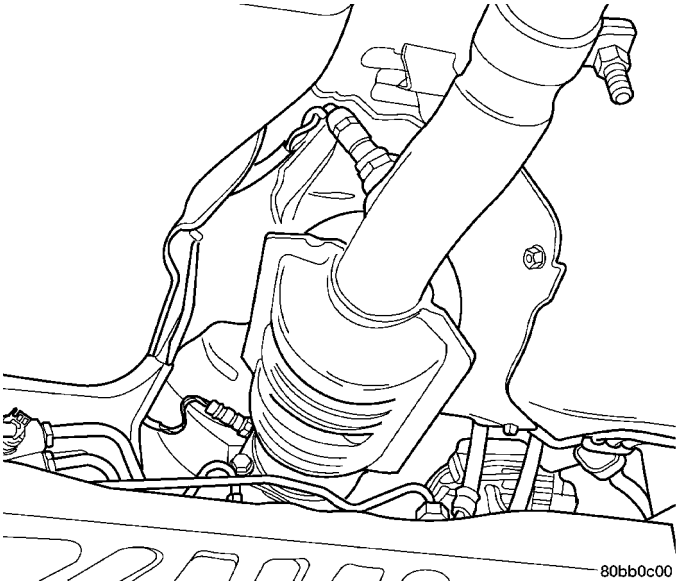

Fig. 40 Downstream Heated Oxygen Sensor 1/2

the upstream heated oxygen sensor input when adjusting injector pulse width.

When the catalytic converter efficiency drops below emission standards, the PCM stores a diagnostic trouble code and illuminates the malfunction indicator lamp (MIL).

The O2 sensors produce voltages from 0 to 1 volt (this voltage is offset by a constant 2.5 volts on NGC vehicles), depending upon the oxygen content of the exhaust gas. When a large amount of oxygen is present (caused by a lean air/fuel mixture, can be caused by misfire and exhaust leaks), the sensors produces a low voltage. When there is a lesser amount of oxygen present (caused by a rich air/fuel mixture, can be caused by internal engine problems) it produces a higher voltage. By monitoring the oxygen content and converting it to electrical voltage, the sensors act as a rich-lean switch.

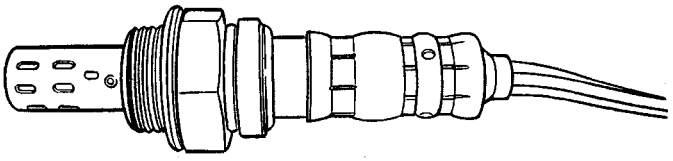

Fig. 41 NGK O2 Sensors

The oxygen sensors are equipped with a heating element that keeps the sensors at proper operating temperature during all operating modes. Maintaining correct sensor temperature at all times allows the system to enter into closed loop operation sooner. Also, it allows the system to remain in closed loop operation during periods of extended idle.

In Closed Loop operation the PCM monitors the O2 sensors input (along with other inputs) and adjusts the injector pulse width accordingly. During Open Loop operation the PCM ignores the O2 sensor input. The PCM adjusts injector pulse width based on pre-programmed (fixed) values and inputs from other sensors.

1.6L Siemens controller and SBEC controller - The Automatic Shutdown (ASD) relay supplies battery voltage to both the upstream and downstream heated oxygen sensors. The oxygen sensors are equipped with a heating element. The heating elements reduce the time required for the sensors to reach operating temperature. The PCM uses pulse width modulation to control the ground side of the heater to regulate the temperature on 4 cyl. upstream O2 heater only.

NGC Controller - Has a common ground for the heater in the O2S. 12 volts is supplied to the heater in the O2S by the NGC controller. Both the upstream and downstream O2 sensors for NGC are pulse width modulation (PWM).

UPSTREAM OXYGEN SENSOR

The input from the upstream heated oxygen sensor tells the PCM the oxygen content of the exhaust gas. Based on this input, the PCM fine tunes the air-fuel ratio by adjusting injector pulse width.

O2 SENSOR (Continued)

The sensor input switches from 0 to 1 volt, depending upon the oxygen content of the exhaust gas in the exhaust manifold (this is offset by 2.5 voltage on NGC vehicles). When a large amount of oxygen is present (caused by a lean air-fuel mixture), the sensor produces voltage as low as 0.1 volt. When there is a lesser amount of oxygen present (rich air-fuel mixture) the sensor produces a voltage as high as 1.0 volt. By monitoring the oxygen content and converting it to electrical voltage, the sensor acts as a rich-lean switch.

The heating element in the sensor provides heat to the sensor ceramic element. Heating the sensor allows the system to enter into closed loop operation sooner. Also, it allows the system to remain in closed loop operation during periods of extended idle.

In Closed Loop, the PCM adjusts injector pulse width based on the upstream heated oxygen sensor input along with other inputs. In Open Loop, the PCM adjusts injector pulse width based on preprogrammed (fixed) values and inputs from other sensors.

DOWNSTREAM OXYGEN SENSOR

The downstream heated oxygen sensor input is used to detect catalytic convertor deterioration. As the convertor deteriorates, the input from the downstream sensor begins to match the upstream sensor input except for a slight time delay. By comparing the downstream heated oxygen sensor input to the input from the upstream sensor, the PCM calculates catalytic convertor efficiency. Also used to establish the upstream O2 goal voltage (switching point).

REMOVAL

REMOVAL - 1/1 UPSTREAM

(1) Remove the air cleaner lid and makeup air hose.

(2) Remove the negative battery cable.

(3) Disconnect electrical connector from sensor.

(4) Remove sensor using an oxygen sensor special tool C-4907 (Fig. 42).

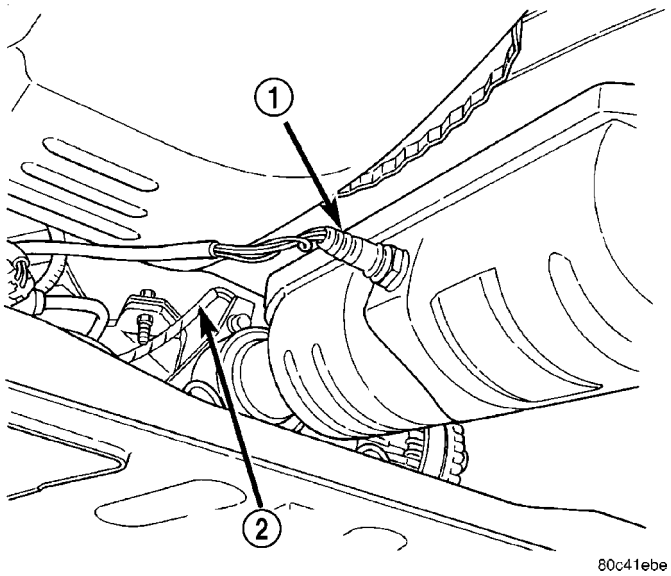

Fig. 42 Oxygen Sensor 1/1 Upstream

1 - DOWN STREAM O2 SENSOR
2 - UP STREAM O2 SENSOR

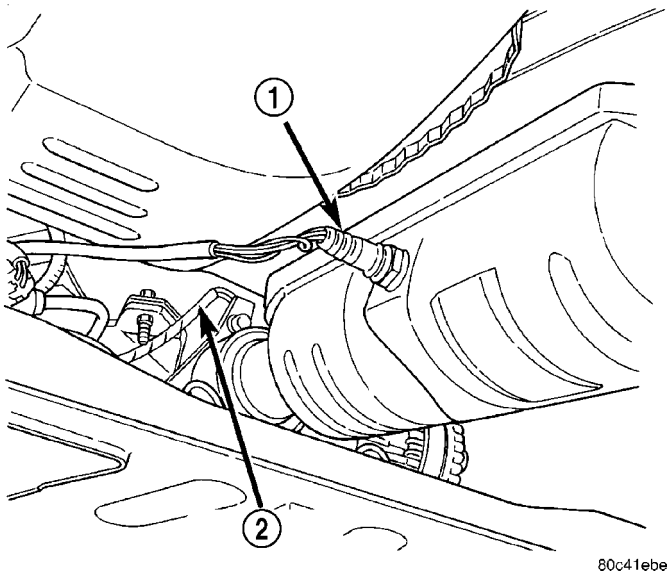

Fig. 43 Oxygen Sensor 1/2 Downstream

1 - DOWN STREAM O2 SENSOR
2 - UP STREAM O2 SENSOR

REMOVAL - 1/2 DOWNSTREAM

The downstream heated oxygen sensor threads into the exhaust pipe behind the catalytic convertor (Fig. 43).

(1) Remove the air cleaner lid and makeup air hose.

(2) Remove the negative battery cable.

(3) Raise vehicle and support.

(4) Disconnect electrical connector from sensor.

(5) Disconnect sensor electrical harness from clips along body.

(6) Remove sensor using an oxygen sensor crow foot wrench such as Snap-On tool YA8875 or equivalent (Fig. 44).

REMOVAL - 2.4L TURBO

(1) Disconnect the negative battery cable.

(2) Unlock and disconnect the electrical connector. It is on the passenger side near the EVAP purge solenoid.

(3) Raise vehicle and support.

O2 SENSOR (Continued)

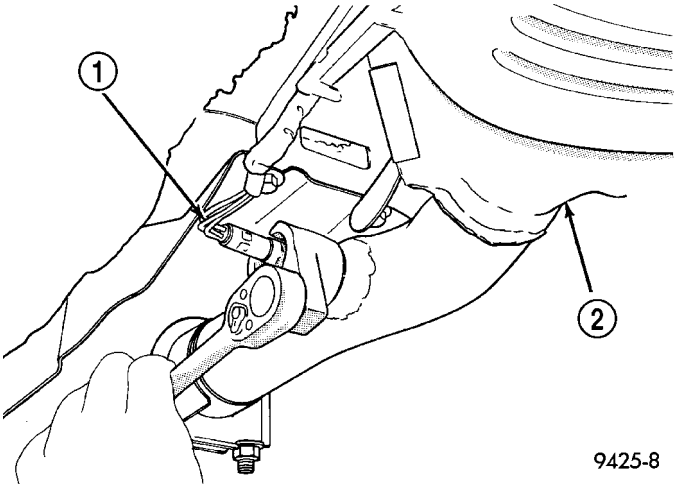

Fig. 44 Oxygen Sensor 1/2 Downstream

1 - DOWNSTREAM HEATED OXYGEN SENSOR
2 - CATALYTIC CONVERTOR

(4) Remove sensor (Fig. 45) using an oxygen sensor crow foot wrench such as Snap-On tool YA8875 or equivalent

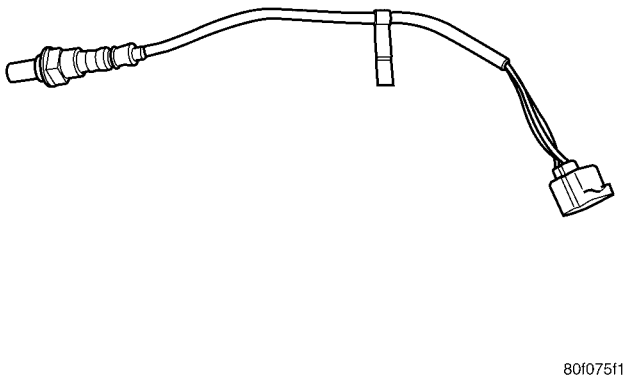

Fig. 45 UPSTREAM O2 SENSOR- 2.4L TURBO

INSTALLATION

INSTALLATION - 1/1 UPSTREAM

(1) After removing the sensor, the exhaust manifold threads must be cleaned with an 18 mm X 1.5 + 6E tap. If reusing the original sensor, coat the sensor threads with an anti-seize compound such as Loctite® 771-64 or equivalent. New sensors have compound on the threads and do not require an additional coating. Tighten the sensor to 28 N·m (20 ft. lbs.) torque.

(2) Connect electrical connector to sensor.

(3) Install the negative battery cable.

(4) Install the air cleaner lid and makeup air hose.

INSTALLATION - 1/2 DOWNSTREAM

The downstream heated oxygen sensor threads into the exhaust pipe behind the catalytic convertor (Fig. 43).

(1) After removing the sensor, the exhaust manifold threads must be cleaned with an 18 mm X 1.5 + 6E tap. If reusing the original sensor, coat the sensor threads with an anti-seize compound such as Loctite® 771-64 or equivalent. New sensors have compound on the threads and do not require an additional coating. Tighten the sensor to 28 N·m (20 ft. lbs.) torque.

(2) Connect sensor electrical harness to clips along body.

(3) Connect electrical connector to sensor.

(4) Lower vehicle.

(5) Install the negative battery cable.

(6) Install the air cleaner lid and makeup air hose.

INSTALLATION - 2.4L TURBO

(1) Install O2 sensor (Fig. 45) using an oxygen sensor crow foot wrench such as Snap-On tool YA8875 or equivalent and tighten to N·m 28 (20 ft. lbs.).

(2) Route O2 sensor wire (Fig. 46) above the heat shield for the generator and away from the exhaust manifold.

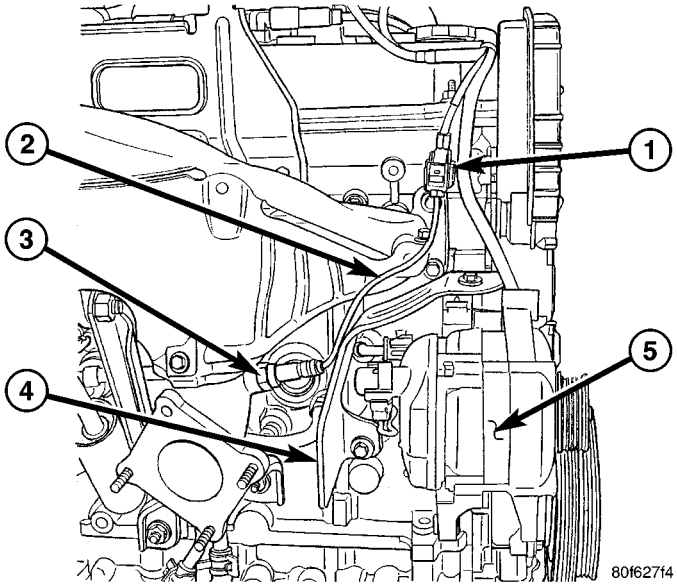

Fig. 46 O2 WIRE ROUTING

1 - O2 Sensor Electrical Connector
2 - Wire routing
3 - O2 Sensor
4 - Heat Shield
5 - Generator

(3) Lower vehicle.

(4) Connect and lock the O2S connector. It is on the passenger side near the EVAP purge solenoid.

(5) Connect the negative battery cable.

THROTTLE BODY

DESCRIPTION

The throttle body mounts to the intake manifold. The throttle position sensor and idle air control motor attach to the throttle body (Fig. 47) .

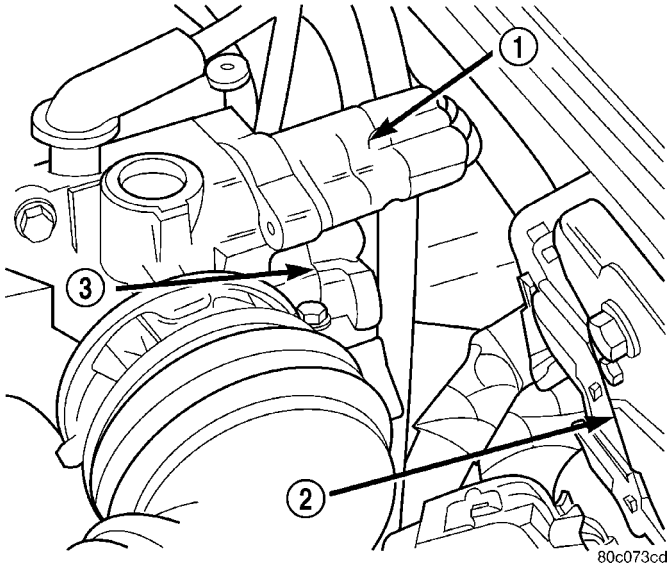

Fig. 47 Throttle Body—2.4L Engines

1 - IAC
2 - PCM
3 - TPS

OPERATION

Filtered air from the air cleaner enters the intake manifold through the throttle body. The throttle body contains an air control passage controlled by an Idle Air Control (IAC) motor. The air control passage is used to supply air for idle conditions. A throttle valve (plate) is used to supply air for above idle conditions.

Certain sensors are attached to the throttle body. The accelerator pedal cable, speed control cable and transmission control cable (when equipped) are connected to the throttle body linkage arm.

A (factory adjusted) set screw is used to mechanically limit the position of the throttle body throttle plate. **Never attempt to adjust the engine idle speed using this screw.** All idle speed functions are controlled by the PCM.

REMOVAL

REMOVAL - 2.0, 2.4L

(1) Remove the air cleaner lid, disconnect the inlet air temperature sensor and makeup air hose.

(2) Remove the negative battery cable.

(3) Remove the engine cover or throttle control shield if equipped.

(4) Remove throttle cable from the throttle body lever (Fig. 48)and (Fig. 49).

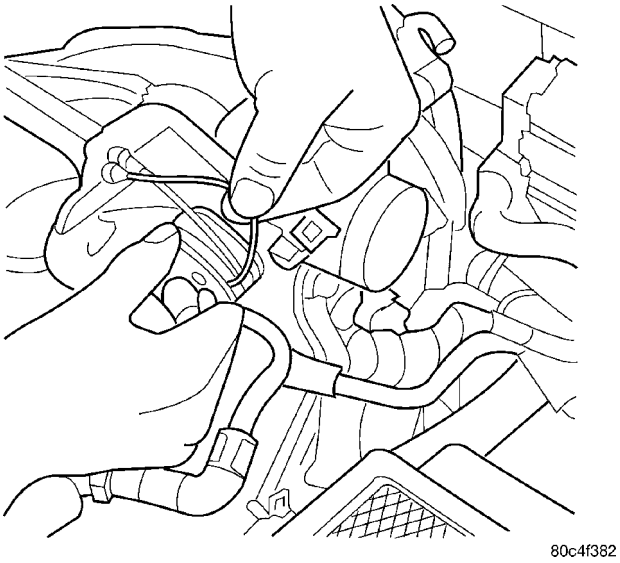

Fig. 48 Throttle Cable Attachment to Throttle Body

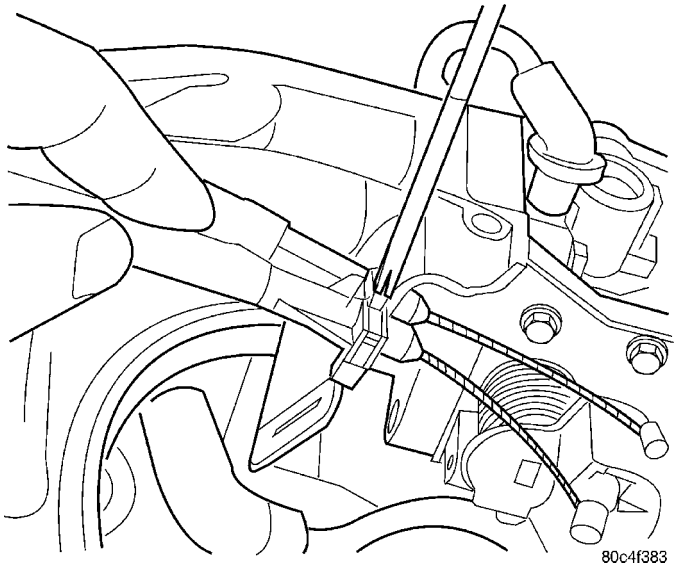

Fig. 49 Disconnecting Throttle Cable

(5) Lift the retaining tabs on the cable and slide cable out of bracket.

(6) If equipped with speed control, remove speed control cable from throttle lever by sliding clasp out hole used for throttle cable.

(7) Remove EVAP purge hose from nipple on throttle body.

(8) Remove the electrical connectors from the throttle position sensor and idle air control motor.

(9) Remove 2 screws holding cable mounting bracket and support bracket.

THROTTLE BODY (Continued)

(10) Remove throttle body mounting bolts (Fig. 50).

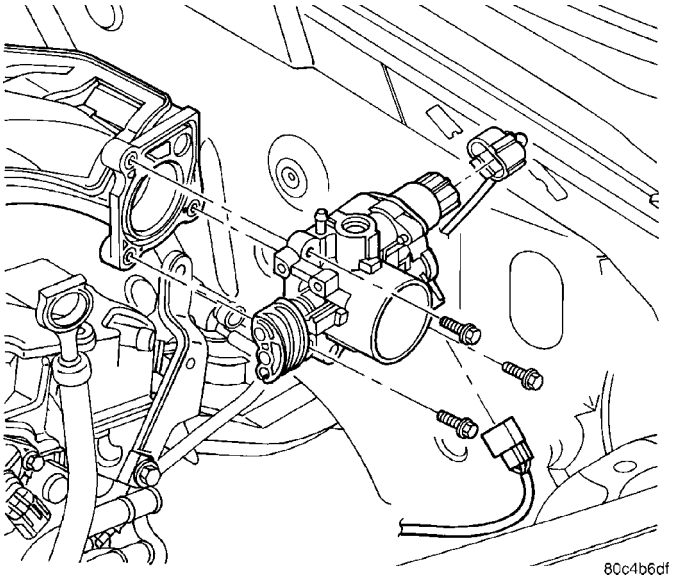

Fig. 50 Throttle Body Bolts

(11) Lift throttle body straight up and to remove the throttle body (Fig. 51).

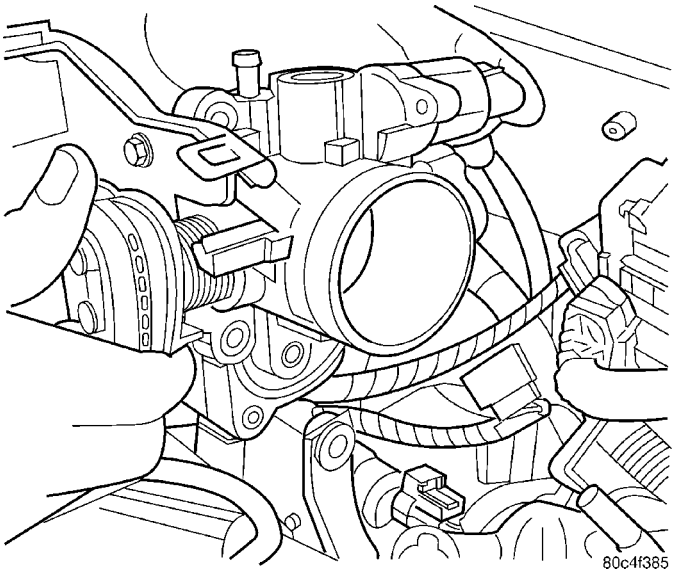

Fig. 51 Throttle Body Removal/Installation

REMOVAL - 1.6L

If any components on the throttle body are bad, the throttle body has to be replaced, except the seal to the intake manifold. There is no serviceable component on the throttle body.

(1) Remove air cleaner cover.
(2) Disconnect the negative battery cable.
(3) Disconnect the electrical connetor (Fig. 52).
(4) Remove the purge hose from throttle body.

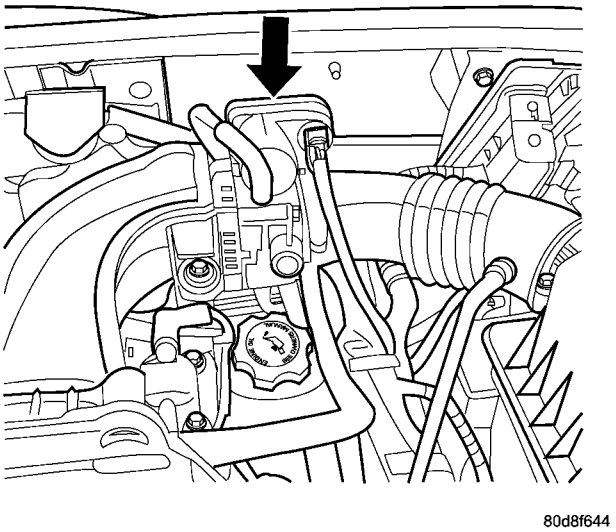

Fig. 52 THROTTLE BODY

(5) Remove the 4 bolts from throttle body (Fig. 53).

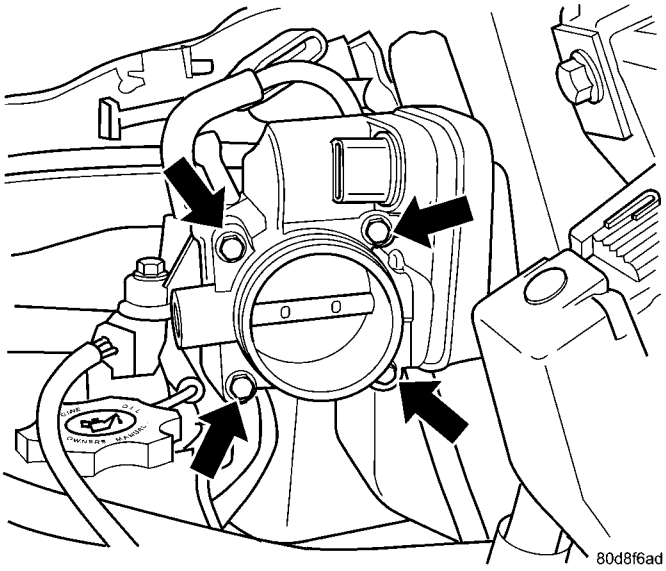

Fig. 53 THROTTLE BODY BOLTS

(6) Remove throttle body.

THROTTLE BODY (Continued)

REMOVAL - 2.4L TURBO

(1) Disconnect the negative battery cable.

(2) Unlock and disconnect the electrical connector for the inlet air temperature sensor.

(3) Unlock and disconnect the electrical connectors from the idle air control motor and throttle position sensor.

(4) Remove the throttle control shield (Fig. 54).

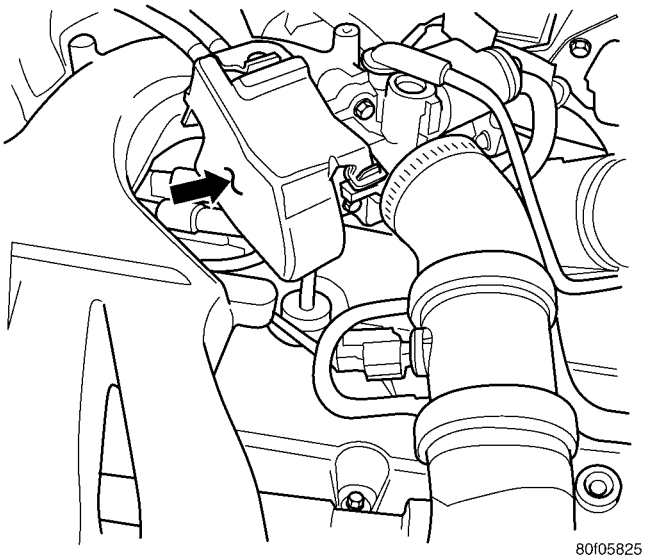

Fig. 54 THROTTLE CONTROL SHIELD - 2.4L TURBO

(5) Remove the throttle cable from the throttle body lever (Fig. 55).

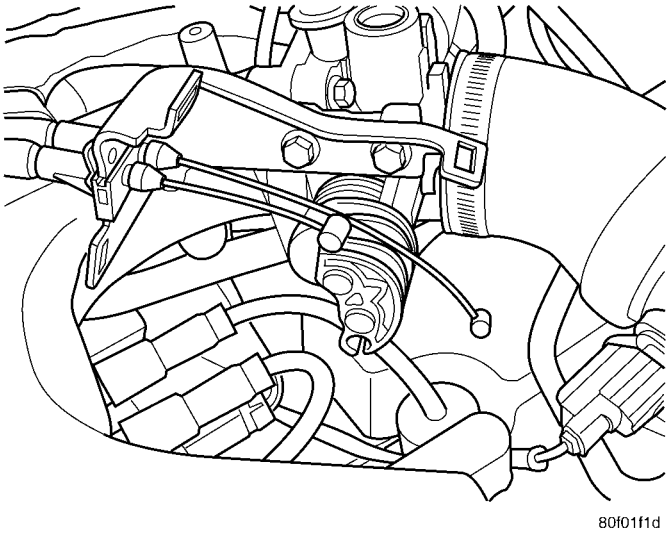

Fig. 55 THROTTLE CABLES

(6) If equipped with speed control, remove speed control cable from the throttle lever by sliding clasp out hole used for throttle cable.

(7) Remove the 2 screws for the throttle cable bracket.

(8) Remove bracket (Fig. 56).

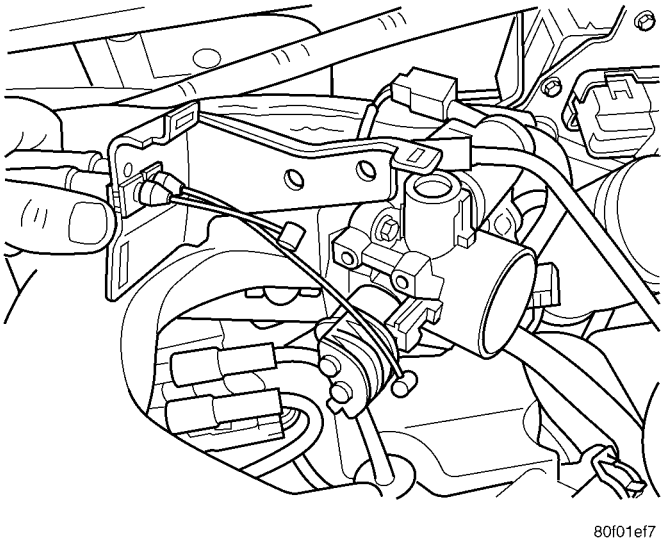

Fig. 56 THROTTLE CABLE BRACKET

(9) Disconnect the throttle body inlet hose and remove from throttle body.

(10) Disconnect the purge hose from the throttle body.

(11) Remove the 3 bolts from the throttle body (Fig. 57).

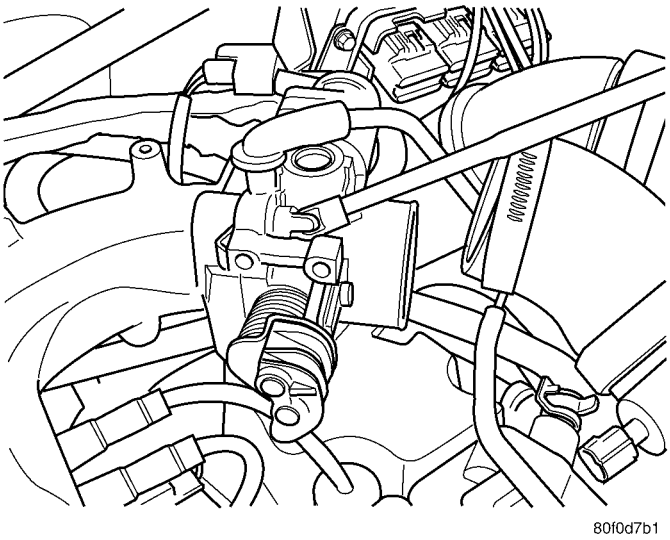

Fig. 57 THROTTLE BODY BOLTS - 2.4L TURBO

THROTTLE BODY (Continued)

(12) Remove the throttle body (Fig. 58).

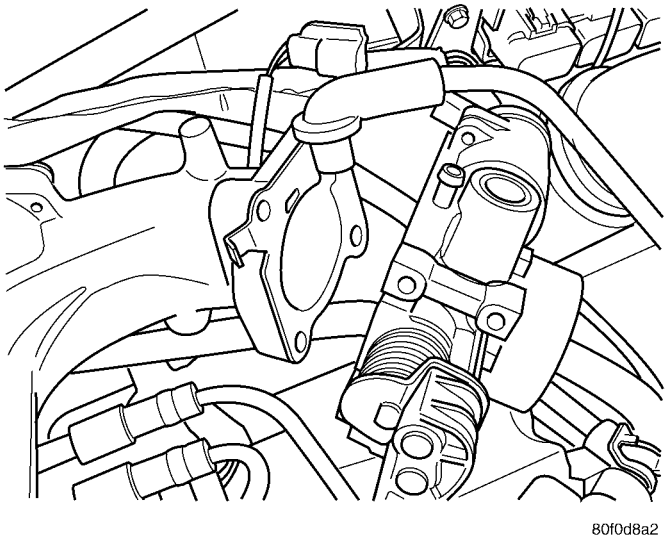

Fig. 58 THROTTLE BODY - 2.4L TURBO

(13) Clean and replace gasket (Fig. 59).

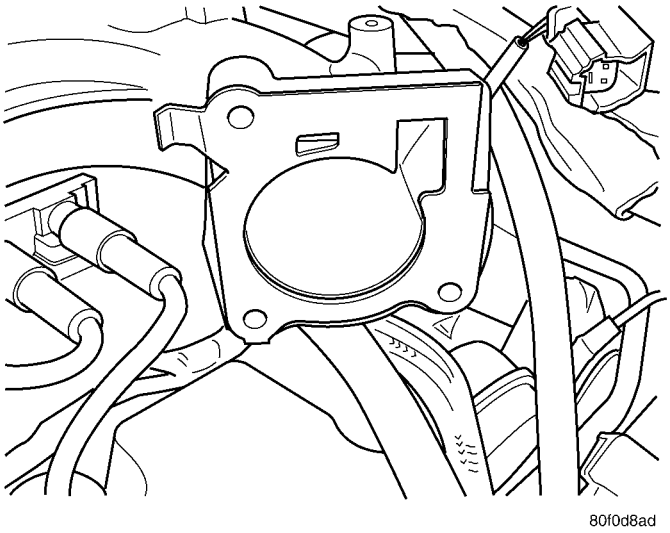

Fig. 59 THROTTLE BODY GASKET- 2.4L TURBO

INSTALLATION

INSTALLATION - 2.0, 2.4L

(1) Attach electrical connectors to idle air control motor and throttle position sensor.

(2) Make sure that the throttle body gasket is in place in the manifold.

(3) Position throttle body on intake and install mounting bolts (Fig. 51). Do Not tighten bolts at this time.

(4) Install throttle cable bracket. Do Not tighten bolts at this time.

(5) Tighten throttle body bolts to 11.75 ±2.25 N·m (105 ±20 in. lbs.) torque.

(6) Tighten throttle cable bracket bolts to 11.75 ±2.25 N·m (105 ±20 in. lbs.) torque.

(7) Install EVAP purge hose to throttle body nipple.

(8) Install cable housing(s) retainer tabs into bracket (Fig. 49).

(9) Install throttle body cables by rotating the throttle lever forward to the wide open position (Fig. 48).

(10) Install throttle control shield.

(11) Install the negative battery cable.

(12) Install the air cleaner lid, connect the inlet air temperature sensor and makeup air hose.

INSTALLATION - 1.6L

NOTE: The electrical connector must be pointed toward the front of vehicle and purge nipple must be in the up position for proper orientation of the throttle body.

(1) Make sure that the mating surfaces for the throttle body and intake manifold are clean.

(2) When installing the throttle body making sure that the gasket is installed in the throttle body (Fig. 60) and (Fig. 61). Align the tabs on the manifold to the pin alignment slots in throttle body, make sure that the purge nipple is pointed up and electrical connector are pointed toward the front of vehicle.

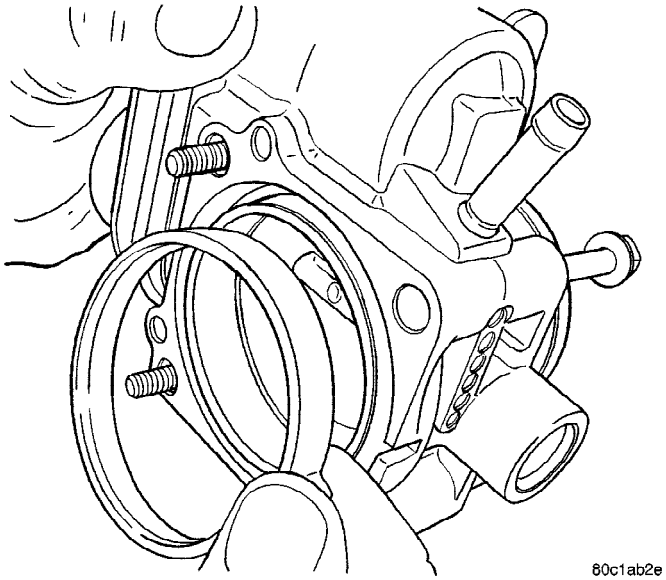

Fig. 60 THROTTLE BODY SEAL

(3) Install throttle, install so that the purge nipple is pointing up. The locating tabs (Fig. 62) on the upper intake will locate the throttle body in the proper orientation.

THROTTLE BODY (Continued)

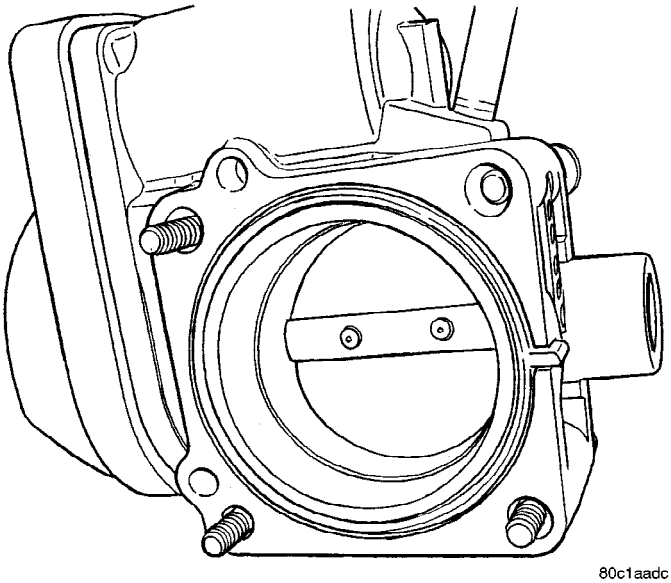

Fig. 61 THROTTLE BODY SEAL INSTALLED

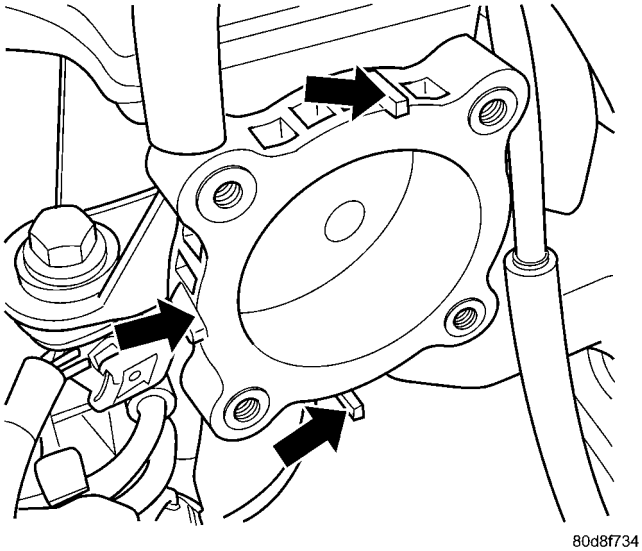

Fig. 62 LOCATING TABS

(4) Install the 4 bolts (Fig. 53) and tighten the bolts in a cross pattern to 11.8 N·m (105 in. lbs.).

(5) Install the purge hose.

(6) Connect the electrical connector (Fig. 52).

(7) Connect the negative battery cable.

(8) Install the air cleaner cover.

INSTALLATION - 2.4L TURBO

(1) Clean and replace gasket (Fig. 59).

(2) Install the throttle body (Fig. 58).

(3) Install the 3 bolts to the throttle body and tighten to N·m 11.8 ±20 (105 in. lbs.) (Fig. 57).

(4) Connect the purge hose to the throttle body.

(5) Connect the throttle body inlet hose to the throttle body and tighten clamp.

(6) Install bracket (Fig. 56).

(7) Install the 2 screws for the throttle cable bracket and tighten to N·m 11.8 ±20 (105 in. lbs.).

(8) If equipped with speed control, install speed control cable to the throttle lever by sliding clasp in the hole used for throttle cable.

(9) Install the throttle cable to the throttle body lever (Fig. 55).

(10) Install the throttle control shield (Fig. 54).

(11) Connect and lock the electrical connectors from the idle air control motor and throttle position sensor.

(12) Connect and lock the electrical connector for the inlet air temperature sensor.

(13) Connect the negative battery cable.

THROTTLE CONTROL CABLE

REMOVAL

(1) Working from the engine compartment, hold the throttle body throttle lever in the wide open position.

(2) Remove the throttle cable from the throttle body cam.

(3) From inside the vehicle, hold up the pedal and remove the cable retainer and throttle cable from the upper end of the pedal shaft.

(4) Remove retainer clip from throttle cable and grommet at dash panel.

(5) From the engine compartment, pull the throttle cable and gromment out of the dash panel.

(6) Remove the throttle cable from throttle bracket by carefully compressing both retaining ears simultaneously then gently pull the throttle cable from throttle bracket or if it is the slide snap design you have to slide the locking tab out of the hole and then slide the cable assembly out of the bracket.

INSTALLATION

(1) From the engine compartment, push the housing end fitting and grommet into the dash panel.Install gromment into the dash panel.

(2) Install the cable housing (throttle body end) into the cable mounting bracket on the engine.

(3) From inside the vehicle, hold up the pedal and install throttle cable and cable retainer in the upper end of the pedal shaft.

(4) At the dash panel, install the cable retainer clip between the end of the throttle cable fitting and grommet

(5) From the engine compartment, rotate the throttle lever wide open and install the throttle cable.

THROTTLE POSITION SENSOR

DESCRIPTION

The throttle position sensor mounts to the side of the throttle body (Fig. 63).

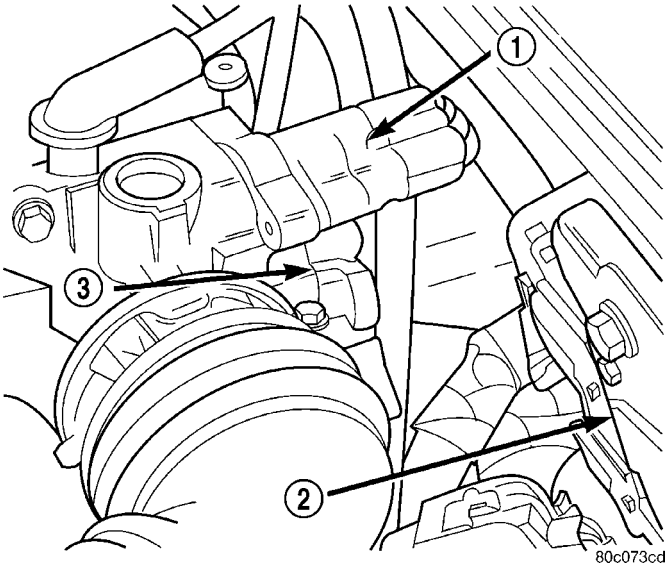

Fig. 63 Throttle Position Sensor—2.4L Engines

1 - IAC
2 - PCM
3 - TPS

OPERATION

The signal represents throttle blade position. As the position of the throttle blade changes, the resistance of the TPS changes.

The PCM supplies approximately 5 volts to the TPS. The TPS output voltage (input signal to the powertrain control module) represents throttle blade position. The TPS output voltage to the PCM varies from approximately 0.6 volt at minimum throttle opening (idle) to a maximum of 4.5 volts at wide open throttle.

Along with inputs from other sensors, the PCM uses the TPS input to determine current engine operating conditions. The PCM also adjusts fuel injector pulse width and ignition timing based on these inputs.

REMOVAL

The throttle position sensor attaches to the side of the throttle body (Fig. 64) and (Fig. 65).

(1) Remove the air cleaner lid and makeup air hose. Loosen the clamp and relocate assembly.

(2) Remove the negative battery cable.

(3) Disconnect electrical connector from the throttle position sensor.

(4) Remove throttle position sensor mounting screws.

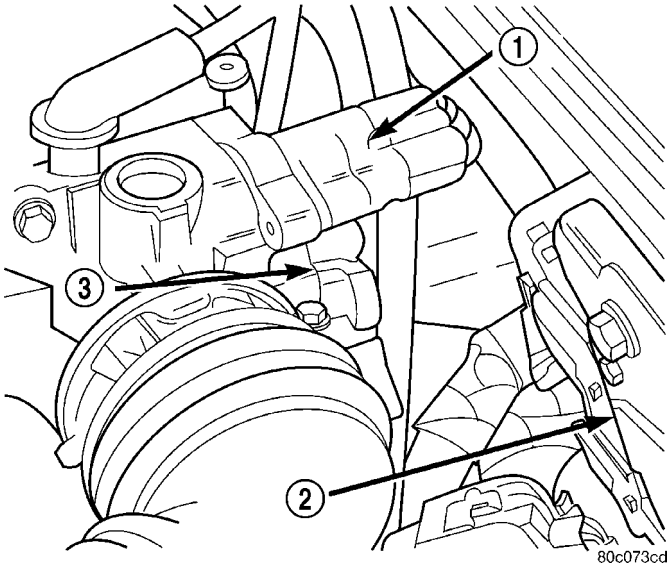

Fig. 64 Throttle Position Sensor and Idle Air Control Motor

1 - IAC
2 - PCM
3 - TPS

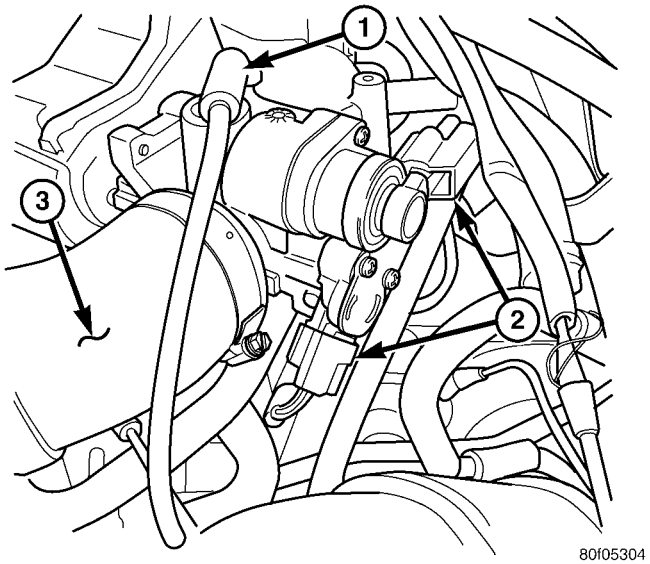

Fig. 65 THROTTLE BODY CONNECTIONS - 2.4L TURBO

1 - Purge Hose
2 - Electrical Connections
3 - Inlet Hose

(5) Remove throttle position sensor.

THROTTLE POSITION SENSOR (Continued)

INSTALLATION

The throttle position sensor attaches to the side of the throttle body (Fig. 64).

(1) The throttle shaft end of the throttle body slides into a socket in the TPS (Fig. 66). The socket has two tabs inside it. The throttle shaft rests against the tabs. When indexed correctly, the TPS can rotate clockwise a few degrees to line up the mounting screw holes with the screw holes in the throttle body. The TPS has slight tension when rotated into position. If it is difficult to rotate the TPS into position, reinstall the sensor with the throttle shaft on the other side of the tabs in the socket of the TPS. Tighten mounting screws to 6.2 N·m (55 in. lbs.) torque.

(2) After installing the TPS, the throttle plate should be closed. If the throttle plate is open, install the sensor on the other side of the tabs in the socket.

(3) Attach electrical connectors to the throttle position sensor.

(4) Install the negative battery cable.

(5) Install the air cleaner lid and makeup air hose and tighten clamp.

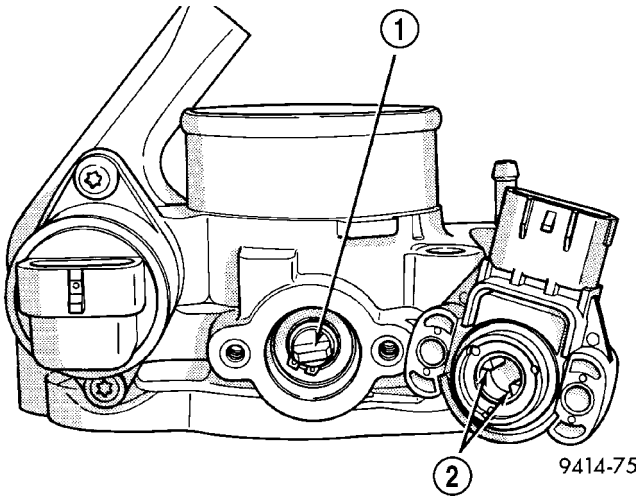

Fig. 66 Throttle Position Sensor

1 - THROTTLE SHAFT
2 - TABS

STEERING

TABLE OF CONTENTS

page

STEERING
DESCRIPTION - POWER STEERING SYSTEM . . 1
OPERATION - POWER STEERING SYSTEM . . . 1
WARNING
WARNINGS AND CAUTIONS 1
DIAGNOSIS AND TESTING
DIAGNOSIS AND TESTING - POWER STEERING FLOW AND PRESSURE TEST 1
DIAGNOSIS AND TESTING - STEERING DIAGNOSIS CHARTS 3
SPECIFICATIONS - POWER STEERING
FASTENER TORQUE 8
SPECIAL TOOLS
POWER STEERING 9
COLUMN 10
GEAR 28
PUMP 37

STEERING

DESCRIPTION - POWER STEERING SYSTEM

This vehicle comes with power steering as standard equipment and it is the only steering system available. The power steering system consists of these major components:

- POWER STEERING PUMP
- POWER STEERING GEAR
- POWER STEERING FLUID RESERVOIR
- POWER STEERING FLUID PRESSURE HOSE
- POWER STEERING FLUID RETURN HOSE
- POWER STEERING FLUID COOLER

For information on the first two components, refer to their respective sections within this service manual group. Information on the remaining components can be found in POWER STEERING PUMP.

OPERATION - POWER STEERING SYSTEM

Turning of the steering wheel is converted into linear (side-to-side) travel through the meshing of the helical pinion teeth with the rack teeth within the steering gear. The lateral travel pushes and pulls the tie rods to change the direction of the vehicle's front wheels.

Power assist steering is provided by a belt driven rotary type pump. It directs fluid through power steering fluid hoses to the power steering gear where it is used to assist the driver's turning effort.

Manual steering control of the vehicle can be maintained if power steering assist is lost. However, under this condition, steering effort is significantly increased.

WARNING

WARNINGS AND CAUTIONS

WARNING: POWER STEERING FLUID, ENGINE PARTS AND EXHAUST SYSTEM MAY BE EXTREMELY HOT IF ENGINE HAS BEEN RUNNING. DO NOT START ENGINE WITH ANY LOOSE OR DISCONNECTED HOSES. DO NOT ALLOW HOSES TO TOUCH HOT EXHAUST MANIFOLD OR CATALYST.

WARNING: FLUID LEVEL SHOULD BE CHECKED WITH THE ENGINE OFF TO PREVENT PERSONAL INJURY FROM MOVING PARTS.

CAUTION: When the system is open, cap all open ends of the hoses, power steering pump fittings or power steering gear ports to prevent entry of foreign material into the components.

DIAGNOSIS AND TESTING

DIAGNOSIS AND TESTING - POWER STEERING FLOW AND PRESSURE TEST

WARNING: TO PREVENT PERSONAL INJURY, SAFETY GOGGLES SHOULD BE WORN AT ALL TIMES WHILE PERFORMING ANY TEST PROCEDURES ON THE POWER STEERING SYSTEM.

STEERING (Continued)

The following procedure is to be used to test the operation of the power steering system on this vehicle. This test will provide the flow rate of the power steering pump along with the maximum relief pressure. This test is to be performed any time a power steering system problem is present to determine if the power steering pump or power steering gear is not functioning properly. The following flow and pressure test is performed using the Power Steering Analyzer Kit, Special Tool 6815 (Fig. 1), hoses, Special Tools 6905 and 6959, and adapters, Special Tool 8185A.

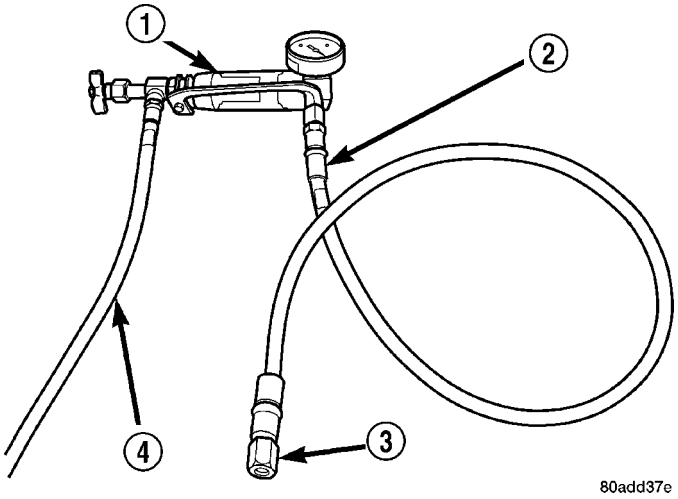

Fig. 1 Power Steering Analyzer With Hoses Installed

1 - SPECIAL TOOL 6815
2 - SPECIAL TOOL 6959
3 - SPECIAL TOOL 8185-2
4 - SPECIAL TOOL 6905 & 6713-1

(1) Assemble hoses on Power Steering Analyzer, Special Tool 6815, as shown (Fig. 1). Install Pressure Hose, Special Tool 6905 (in 6893 kit), in the inlet fitting on Power Steering Analyzer flow meter. Install Pressure Hose, Special Tool 6713 (in 6815 kit) on 6905. Install Pressure Hose, Special Tool 6959, in the outlet fitting on Power Steering Analyzer flow meter.

(2) Install Adapter Fitting, Special Tool 8185-1A, on the end of Pressure Hose, Special Tool 6713. Install Adapter Fitting, Special Tool 8185-2, on Pressure Hose, Special Tool 6959.

(3) Raise the vehicle. (Refer to LUBRICATION & MAINTENANCE/HOISTING - STANDARD PROCEDURE)

(4) Unscrew the tube nut and disconnect the power steering fluid pressure hose from the power steering gear (Fig. 2).

(5) Connect the vehicle's power steering pressure hose to Adapter Fitting, Special Tool 8185-2, connected to the analyzer (Fig. 3). Tighten the tube nut to a torque of 47 N·m (35 ft. lbs.). Route the hoses away from the exhaust system as well as possible.

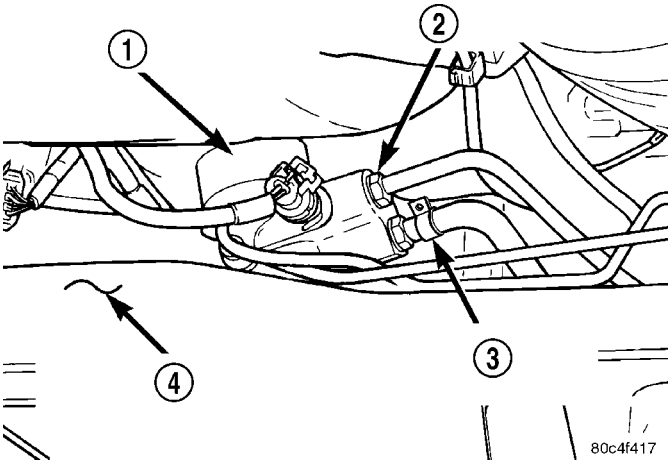

Fig. 2 Hose At Gear

1 - POWER STEERING GEAR
2 - PRESSURE HOSE TUBE NUT
3 - RETURN HOSE CLAMP
4 - REAR OF FRONT SUSPENSION CROSSMEMBER

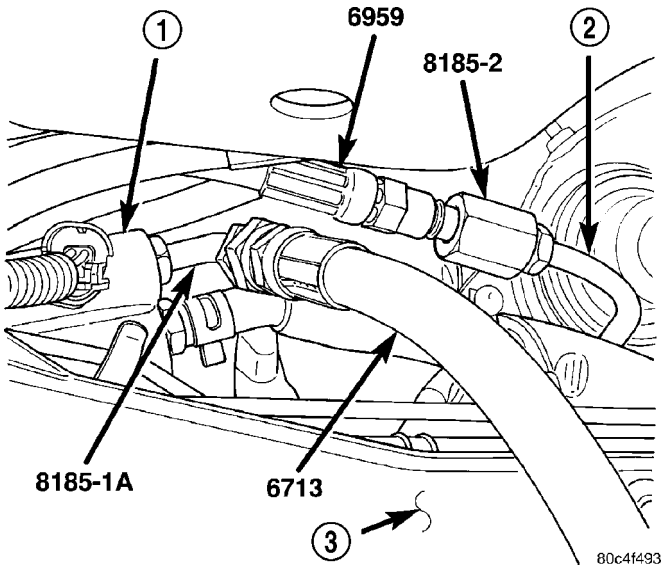

Fig. 3 Analyzer Connected To Vehicle

1 - POWER STEERING GEAR
2 - PRESSURE HOSE
3 - REAR OF FRONT SUSPENSION CROSSMEMBER

(6) Connect Adapter Fitting, Special Tool 8185-1A, which is connected to the analyzer outlet hose (valve end), to the power steering gear port (Fig. 3). Tighten the tube nut to a torque of 47 N·m (35 ft. lbs.).

(7) Being careful not to kink or pinch the analyzer hoses, lower the vehicle to the ground.

TEST PROCEDURE

(1) Completely open the valve on the Power Steering Analyzer flow meter.

(2) Start the engine and let idle long enough to circulate power steering fluid through the analyzer and

STEERING (Continued)

hoses, until the air is out of the fluid. Shut the off engine.

(3) Check the power steering fluid level and add fluid as necessary. Start the engine again and let idle.

(4) The analyzer gauge should read below 862 kPa (125 psi). If above, inspect the hoses for restrictions and repair as necessary. The initial pressure should be in the range of 345-552 kPa (50-80 psi). The flow meter should read between 1.5 and 1.7 GPM.

CAUTION: The following test procedure step involves testing maximum pump pressure output and flow control valve operation. Do not leave valve closed for more than five seconds as the pump could be damaged.

NOTE: Power steering pump maximum relief pressure is 9308 to 9998 kPa (1350 to 1450 psi.).

(5) Close the flow meter valve fully three times and record highest pressure indicated each time. **All three readings must be above specifications and within 345 kPa (50 psi) of each other.**

- If the power steering pump pressure's are above specifications, but not within 345 kPa (50 psi) of each other, replace the power steering pump.
- If the pressure's are within 345 kPa (50 psi) of each other, but below specifications, replace the power steering pump.

If the power steering pump requires replacement, refer to the section Power Steering Pump within this group for the removal and installation procedure.

CAUTION: During the next step, do not force the pump to operate against the stops for more than 5 seconds at a time as pump damage may result.

(6) Completely open the valve on the Power Steering Analyzer flow meter. Turn the steering wheel to the extreme left until the stop in the steering gear is met, then turn the steering wheel to the right until the right stop is met. Record the highest indicated pressure at each position. Compare the recorded readings to the specifications. If the highest output pressure reading against one stop is not within 345 kPa (50 psi) of the highest reading at the other stop, the steering gear is leaking internally and must be replaced.

If the power steering gear requires replacement, (Refer to 19 - STEERING/GEAR - REMOVAL).

DIAGNOSIS AND TESTING - STEERING DIAGNOSIS CHARTS

NOTE: There are three diagnosis charts following that cover the topics Power Steering Noise, Steering Wheel Feel, and Power Steering Fluid.

POWER STEERING NOISE

CONDITION	POSSIBLE CAUSES	CORRECTION
OBJECTIONABLE HISS OR WHISTLE*	1. Damaged or mispositioned steering column shaft/coupling dash panel seal.	1. Reposition or replace steering column shaft/coupling dash panel seal.
	2. Noisy valve in power steering gear.	2. Replace power steering gear.
RATTLE OR CLUNK	1. Power steering gear loose on front suspension crossmember.	1. Inspect power steering gear mounting bolts. Replace as necessary. Tighten to the specified torque.
	2. Front suspension crossmember mounting fasteners loose at frame.	2. Tighten the front suspension crossmember mounting fasteners to the specified torque.
	3. Loose tie rod (outer or inner).	3. Check tie rod pivot points for wear. Replace worn/loose parts as required.
	4. Loose lower control arm mounting bolts at front suspension crossmember.	4. Tighten control arm mounting bolts to the specified torques.
	5. Loose strut assembly mounting fasteners at strut tower.	5. Tighten strut assembly fasteners to the specified torques.

STEERING (Continued)

CONDITION	POSSIBLE CAUSES	CORRECTION
	6. Power steering fluid pressure hose touching the body of the vehicle.	6. Adjust hose to proper position by loosening, repositioning, and tightening fitting to specified torque. Do not bend tubing.
	7. Internal power steering gear noise.	7. Replace power steering gear.
	8. Damaged front suspension crossmember.	8. Replace front suspension crossmember.
CHIRP OR SQUEAL (POWER STEERING PUMP)	1. Loose power steering pump drive belt.	1. Check and replace automatic belt tensioner as necessary. Replace belt if worn or glazed.
WHINE OR GROWL (POWER STEERING PUMP) **	1. Low fluid level.	1. Fill power steering fluid reservoir to proper level and check for leaks.
	2. Power steering hose touching vehicle body or frame.	2. Adjust hose to proper position by loosening, repositioning, and tightening fitting to specified torque. Do not bend tubing. Replace hose if damaged.
	3. Extreme wear of power steering pump internal components.	3. Replace power steering pump and flush system as necessary.
SUCKING AIR SOUND	1. Loose clamp on power steering fluid return hose.	1. Tighten or replace hose clamp.
	2. Missing O-Ring on power steering hose connection.	2. Inspect connection and replace O-Ring as required.
	3. Low power steering fluid level.	3. Fill power steering fluid reservoir to proper level and check for leaks.
	4. Air leak between power steering fluid reservoir and power steering pump.	4. Replace power steering pump (with reservoir).
SQUEAK OR RUBBING SOUND	1. Steering column shroud rubbing.	1. Realign shrouds as necessary.
	2. Steering column shaft rubbing.	2. Move or realign item rubbing shaft.
	3. Steering column shaft dry-rubbing seal at dash panel.	3. Lubricate contact surface.
	4. Steering gear internally noisy.	4. Replace steering gear.
SCRUBBING OR KNOCKING NOISE.	1. Incorrect tire or wheel size.	1. Replace incorrect size tire or wheel with size used as original equipment.
	2. Interference between steering gear and other vehicle components.	2. Check for bent or misaligned components and correct as necessary.
	3. Steering gear internal stops worn excessively.	3. Replace steering gear.

STEERING (Continued)

NOTE: * There is some noise in all power steering systems. One of the most common is a hissing sound evident when turning the steering wheel when at a standstill or when parking and the steering wheel is at the end of its travel. Hiss is a very high frequency noise similar to that experienced while slowly closing a water tap. The noise is present in every valve and results when high velocity fluid passes valve orifice edges. There is no relationship between this noise and the performance of the steering system.

NOTE: ** Power steering pump growl results from the development of high pressure fluid flow. Normally this noise level should not be high enough to be objectionable.

STEERING WHEEL FEEL

CONDITION	POSSIBLE CAUSES	CORRECTION
STEERING WHEEL/ COLUMN CLICKING, CLUNKING OR RATTLING.	1. Steering column preload is not set properly.	1. Loosen steering column coupling pinch bolt to reset steering column preload. Replace pinch bolt and torque to specifications.
	2. Loose steering coupling pinch bolt.	2. Replace pinch bolt and torque to specifications.
	3. Steering column bearings.	3. Replace steering column.
STEERING WHEEL HAS FORE AND AFT LOOSENESS.	1. Steering wheel retaining screw not properly tightened and torqued.	1. Tighten the steering wheel retaining nut to its specified torque.
	2. Steering column preload is not set properly.	2. Loosen steering column coupling pinch bolt to reset steering column preload. Replace pinch bolt and torque to specifications.
	3. Steering column lower bearing spring retainer slipped on steering column shaft.	3. Replace steering column.
STEERING WHEEL OR DASH VIBRATES DURING LOW SPEED OR STANDSTILL STEERING MANEUVERS.	1. Air in the fluid of the power steering system.	1. Bleed air from system following the power steering pump initial operation service procedure.*
	2. Tires not properly inflated.	2. Inflate tires to the specified pressure.
	3. Excessive engine vibration.	3. Ensure that the engine is running properly.
	4. Engine torque struts out of alignment.	4. Align engine torque struts.
	5. Loose tie rod end jam nut.	5. Tighten the inner to outer tie rod jam nut to the specified torque.
	6. Overcharged air conditioning system.	6. Check air conditioning pump head pressure and correct as necessary.
STEERING CATCHES, STICKS IN CERTAIN POSITIONS OR IS DIFFICULT TO TURN.	1. Low power steering fluid level.	1. Fill power steering fluid reservoir to specified level and check for leaks.
	2. Tires not inflated to specified pressure.	2. Inflate tires to the specified pressure.

STEERING (Continued)

CONDITION	POSSIBLE CAUSES	CORRECTION
	3. Lack of lubrication in front suspension control arm ball joints.	3. Lubricate ball joints if ball joints are not a lubricated for life type ball joint. If ball joint is a lubricated for life ball joint, replace ball joint or control arm.
	4. Lack of lubrication in steering gear outer tie rod ends.	4. Lubricate tie rod ends if they are not a lubricated for life type. If tie rod end is a lubricated for life type, replace tie rod end.
	5. Loose power steering pump drive belt.	5. Check and replace automatic belt tensioner as necessary. If drive belt is worn or glazed, replace belt.
	6. Faulty power steering pump flow control (Follow Power Steering System Flow and Pressure Test procedure).	6. Replace power steering pump.
	7. Excessive friction in steering column or intermediate shaft.	7. Isolate and correct condition.
	8. Binding upper strut bearing.	8. Disassemble strut assembly. Correct binding condition in strut bearing or replace bearing.
	9. Excessive friction in power steering gear.	9. Replace power steering gear.
STIFF, HARD TO TURN, SURGE, MOMENTARY INCREASE IN EFFORT WHEN TURNING.	1. Tires not properly inflated.	1. Inflate tires to specified pressure.
	2. Low power steering fluid level.	2. Add power steering fluid as required to power steering fluid reservoir to obtain proper level. Check for leaks.
	3. Loose power steering pump drive belt.	3. Check and replace automatic belt tensioner as necessary. If drive belt is worn or glazed, replace belt.
	4. Lack of lubrication in control arm ball joints.	4. Lubricate ball joints if ball joints are not a lubricated for life type ball joint. If ball joint is a lubricated for life ball joint, replace ball joint or control arm.
	5. Low power steering pump pressure (Follow Power Steering System Flow and Pressure Test procedure).	5. Replace the power steering pump as necessary.
	6. High internal leak in power steering gear (Follow Power Steering System Flow and Pressure Test procedure).	6. Replace power steering gear.
STEERING WHEEL DOES NOT RETURN TO CENTER POSITION.	1. Tires not inflated properly.	1. Inflate tires to specified pressure.
	2. Improper front wheel alignment.	2. Check and adjust wheel alignment as necessary.

STEERING (Continued)

CONDITION	POSSIBLE CAUSES	CORRECTION
	3. Lack of lubrication in front suspension control arm ball joints.	3. Lubricate ball joints if ball joints are not a lubricated for life type of ball joint. If ball joint is a lubricated for life ball joint, replace ball joint or control arm.
	4. Steering column coupling joints misaligned.	4. Realign steering column coupling joints.
	5. Steering wheel rubbing.**	5. Adjust steering column shrouds to eliminate rubbing condition.
	6. Damaged, mis-positioned or un-lubricated steering column coupler to dash seal.**	6. Replace, reposition, or lubricate dash seal.
	7. Binding upper strut bearing.	7. Disassemble strut assembly. Correct binding condition in strut bearing or replace bearing.
	8. Tight shaft bearing in steering column.	8. Replace the steering column.
	9. Excessive friction in steering column coupling.	9. Replace steering column coupling.
	10. Excessive friction in power steering gear.	10. Replace power steering gear.
EXCESSIVE STEERING WHEEL KICKBACK OR TOO MUCH STEERING WHEEL FREE PLAY.	1. Air in the fluid of the power steering system.	1. Bleed air from system following the the power steering pump initial operation service procedure.*
	2. Power steering gear loose on front suspension crossmember.	2. Inspect power steering gear mounting bolts. Replace as necessary. Tighten to the specified torque.
	3. Steering column coupling worn, broken or loose.	3. Replace steering column coupling.
	4. Free play in steering column.	4. Check all components of the steering system and repair or replace as required.
	5. Worn control arm ball joints.	5. Replace ball joint or control arm as required.
	6. Loose steering knuckle to ball joint stud pinch bolt.	6. Inspect pinch bolts, replace as necessary, and tighten to specified torque.
	7. Front wheel bearings loose or worn.	7. Replace wheel bearing or knuckle as necessary.
	8. Loose outer tie rod ends.	8. Replace outer tie rod ends that have excessive free play.
	9. Loose inner tie rod ends.	9. Replace power steering gear.
	10 Defective steering gear rotary valve.	10. Replace power steering gear.

NOTE: * Steering shudder can be expected in new vehicles and vehicles with recent steering system repairs. Shudder should dissipate after the vehicle has been driven several weeks.

STEERING (Continued)

NOTE: ** To evaluate this condition, it may be necessary to disconnect the coupling at the base of the steering column. Turn the steering wheel and feel or listen for internal rubbing in steering column. To avoid damaging the column clockspring, note the following. Before disconnecting coupling, place tires in the straight-ahead position and center steering wheel. Once disconnected, DO NOT rotate steering wheel more than one revolution in either direction and place steering wheel in original location before reconnecting coupling. If this position is lost, the steering column clockspring must be re-centered following the procedure found within the procedure for steering column installation in the steering column section.

POWER STEERING FLUID

CONDITION	POSSIBLE CAUSES	CORRECTION
LOW FLUID LEVEL WITH VISIBLE LEAK.	1. Loose power steering hose fittings.	1. Tighten the fitting to its specified torque.
	2. Damaged or missing fitting seal, gasket, or O-ring.	2. Replace as necessary.
	3. Power steering pump or power steering gear leaking.	3. Repair or replace the leaking component as required.
AERATED FLUID.*	1. Low fluid level.**	1. Fill power steering fluid reservoir to proper level.
	2. Air leak between power steering fluid reservoir and pump.	2. Inspect for proper sealing. Replace the power steering pump (with reservoir).
	3. Cracked power steering pump housing.	3. Replace the power steering pump.
RESERVOIR FLUID OVERFLOW AND FLUID IS MILKY IN COLOR	1. Water contamination.	1. Drain the power steering fluid from the system. Flush the system with fresh clean power steering fluid, drain, then refill to the proper level.

NOTE: * Aerated fluid will appear with bubbles or foam, somewhat like champagne, when viewed through the reservoir fill opening.

NOTE: ** Extremely cold temperatures may cause power steering fluid aeration, if the power steering fluid is low.

SPECIFICATIONS - POWER STEERING FASTENER TORQUE

DESCRIPTION	N·m	Ft. Lbs.	In. Lbs.
Cooler Mounting Screws	10	—	90
Gear Mounting Bolts	61	45	—
Hose Tube Nut At Gear	47	35	—
Hose Tube Nut At Pump (2.4L Eng.)	68	50	—
Pump Pressure Fitting	88	65	—
Pump Mounting Bolts	28	21	250
Pump Rear Bracket-To-Engine Bolts	54	40	—
Reservoir Bracket Mounting Bolts	10	—	90
Pressure Hose Routing Clamp Bolt-Engine front	61	45	—
Pressure Hose Routing Clamp Bolt-Structural Collar	61	45	—
Pressure Switch	8	—	70
Suspension Crossmember Mounting Bolts-Through Lower Control Arm	250	185	—
Suspension Crossmember Mounting Bolts-All Others	153	113	—
Tie Rod Steering Arm Nut	55	40	—
Tie Rod Jam Nut	75	55	—

STEERING (Continued)

SPECIAL TOOLS

POWER STEERING

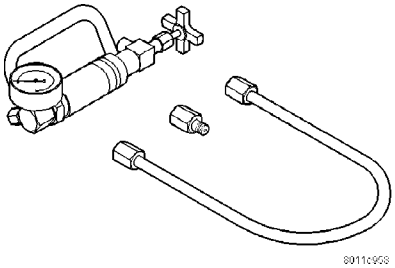

Power Steering Analyzer 6815

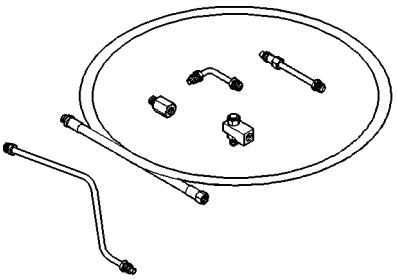

Adapters, Power Steering Analyzer 6893

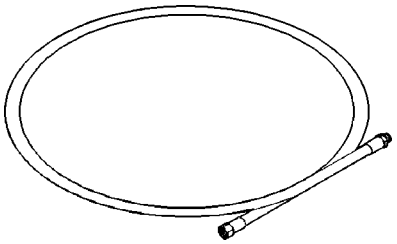

Hose, Power Steering Analyzer 6959

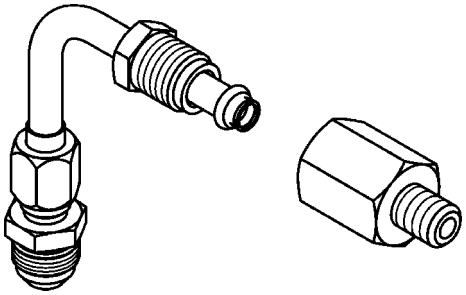

Adapters, Power Steering Analyzer 8185A

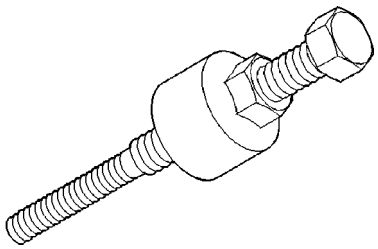

Installer C-4063B

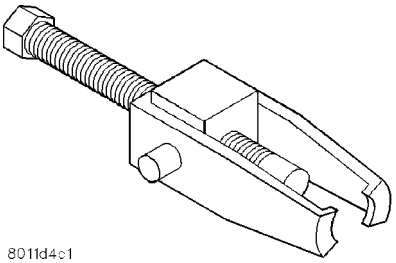

Puller C-4333

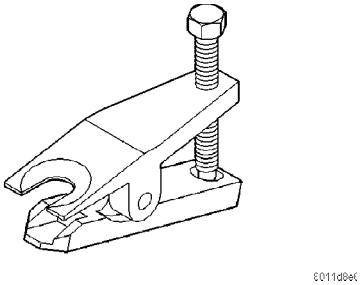

Remover MB991113

COLUMN

TABLE OF CONTENTS

	page
COLUMN	
DESCRIPTION	10
OPERATION	10
WARNING	
WARNINGS AND CAUTIONS	11
DIAGNOSIS AND TESTING - STEERING COLUMN	11
REMOVAL	
REMOVAL	11
REMOVAL - RHD	16
INSTALLATION	
INSTALLATION	16
INSTALLATION - RHD	18
SPECIFICATIONS - STEERING COLUMN FASTENER TORQUE	18
IGNITION SWITCH	
REMOVAL	18
INSTALLATION	19
KEY/LOCK CYLINDER	
REMOVAL	20
INSTALLATION	20
SHROUD - UPPER/LOWER	
REMOVAL	21
INSTALLATION	21
STEERING COUPLING - LOWER	
DESCRIPTION	21
OPERATION	21
DIAGNOSIS AND TESTING - STEERING COLUMN LOWER COUPLING	22
REMOVAL	22
INSTALLATION	25
STEERING WHEEL	
REMOVAL	26
INSTALLATION	26

COLUMN

DESCRIPTION

This vehicle is equipped with a tilt type steering column. The steering column is designed to be serviced only as complete assembly if an internal component is found to be defective (Fig. 1) . The shaft, bearings and upper coupling are all serviced with the column.

The replaceable components on the steering column assembly are:

- The key cylinder
- The ignition switch
- The multi-function switch
- The clockspring
- The trim shrouds
- The steering wheel
- The driver airbag module

These components can be serviced without removal of the steering column from the vehicle. Refer to the appropriate section for servicing these components separately.

OPERATION

Turning of the steering wheel is transferred through the steering column, upper and lower couplings to the power steering gear. The gear then moves the steering knuckles, steering the vehicle.

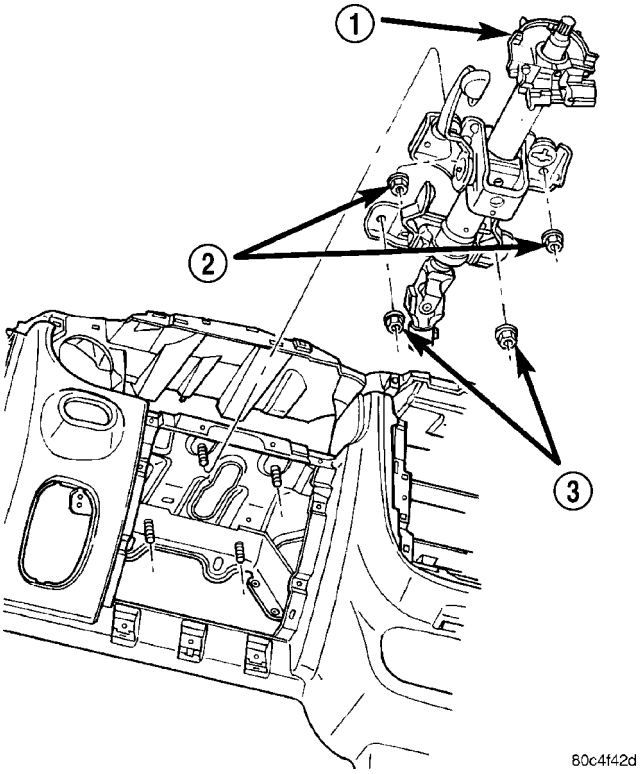

Fig. 1 Steering Column

1 - STEERING COLUMN
2 - UPPER MOUNTING NUTS
3 - LOWER MOUNTING NUTS

COLUMN (Continued)

The steering column used on vehicle's equipped with a manual transaxle has an anti-theft provision. With the key/lock cylinder turned to the LOCK position, and the key removed, the steering shaft (and steering wheel) cannot be turned more than 180 degrees before locking. **Vehicles equipped with an automatic transaxle do not have this feature.**

WARNING

WARNINGS AND CAUTIONS

WARNING: SAFETY GOGGLES SHOULD BE WORN AT ALL TIMES WHEN WORKING ON STEERING COLUMNS.

WARNING: BEFORE BEGINNING ANY SERVICE PROCEDURES THAT INVOLVES REMOVING THE AIR BAG. REMOVE AND ISOLATE THE NEGATIVE (-) BATTERY CABLE (GROUND) FROM THE VEHICLE BATTERY. THIS IS THE ONLY SURE WAY TO DISABLE THE AIR BAG SYSTEM. FAILURE TO DO THIS COULD RESULT IN ACCIDENTAL AIR BAG DEPLOYMENT AND POSSIBLE PERSONAL INJURY.

WARNING: THE AIR BAG SYSTEM IS A SENSITIVE, COMPLEX ELECTRO-MECHANICAL UNIT. BEFORE ATTEMPTING TO DIAGNOSE, REMOVE OR INSTALL THE AIR BAG SYSTEM COMPONENTS YOU MUST FIRST DISCONNECT AND ISOLATE THE BATTERY NEGATIVE (GROUND) CABLE. FAILURE TO DO SO COULD RESULT IN ACCIDENTAL DEPLOYMENT OF THE AIR BAG AND POSSIBLE PERSONAL INJURY. THE FASTENERS, SCREWS, AND BOLTS, ORIGINALLY USED FOR THE AIR BAG COMPONENTS, HAVE SPECIAL COATINGS AND ARE SPECIFICALLY DESIGNED FOR THE AIR BAG SYSTEM. THEY MUST NEVER BE REPLACED WITH ANY SUBSTITUTES. ANYTIME A NEW FASTENER IS NEEDED, REPLACE WITH THE CORRECT FASTENERS PROVIDED IN THE SERVICE PACKAGE OR FASTENERS LISTED IN THE PARTS BOOKS. BEFORE SERVICING A STEERING COLUMN EQUIPPED WITH AN AIR BAG, (Refer to 8 - ELECTRICAL/RESTRAINTS - WARNING).

WARNING: WHEN HANDLING AN UNDEPLOYED AIR BAG MODULE DURING SERVICING OF THE STEERING COLUMN, THE FOLLOWING PRECAUTIONS SHOULD BE OBSERVED:

- **AT NO TIME SHOULD ANY SOURCE OF ELECTRICITY BE PERMITTED NEAR THE INFLATOR ON THE BACK OF THE AIR BAG MODULE.**
- **WHEN CARRYING A LIVE MODULE, THE TRIM COVER SHOULD BE POINTED AWAY FROM THE BODY TO MINIMIZE INJURY IF THE MODULE SHOULD ACCIDENTLY DEPLOY.**
- **IF THE AIR BAG MODULE IS PLACED ON A BENCH OR OTHER SURFACE, THE PLASTIC COVER SHOULD BE FACE-UP TO MINIMIZE MOVEMENT, IN CASE OF ACCIDENTAL DEPLOYMENT.**

CAUTION: Disconnect negative (ground) cable from the battery before servicing any column component.

CAUTION: Do not attempt to remove the pivot pins to disassemble the tilting mechanism. Damage will occur.

DIAGNOSIS AND TESTING - STEERING COLUMN

For diagnosis of conditions relating to the steering column, (Refer to 19 - STEERING - DIAGNOSIS AND TESTING).

REMOVAL

REMOVAL

NOTE: Before proceeding, (Refer to 19 - STEERING/COLUMN - WARNING).

WARNING: WHEN AN UNDEPLOYED AIRBAG MODULE IS TO BE REMOVED FROM THE STEERING WHEEL, FIRST DISCONNECT THE BATTERY GROUND CABLE AND ISOLATE IT. ALLOW THE SYSTEM CAPACITOR TO DISCHARGE FOR A MINIMUM OF TWO MINUTES, THEN BEGIN THE AIRBAG REMOVAL.

COLUMN (Continued)

(1) Disconnect the negative (-) cable from the battery and isolate the cable.

(2) Before beginning removal of the steering column, be sure the front wheels of vehicle are in the STRAIGHT-AHEAD position.

(3) Remove the ignition key from the ignition key cylinder.

(4) Remove the silencer pad below the knee blocker panel below the steering column.

(5) Fold down and remove the knee blocker.

(6) Remove the two screws attaching the lower shroud to the steering column and upper shroud (Fig. 2). After removing the screws, unclip the shrouds from each other by applying hand pressure along the seams where the shrouds connect on the sides, then remove the lower shroud from the upper shroud and column. Remove the upper shroud from the steering column.

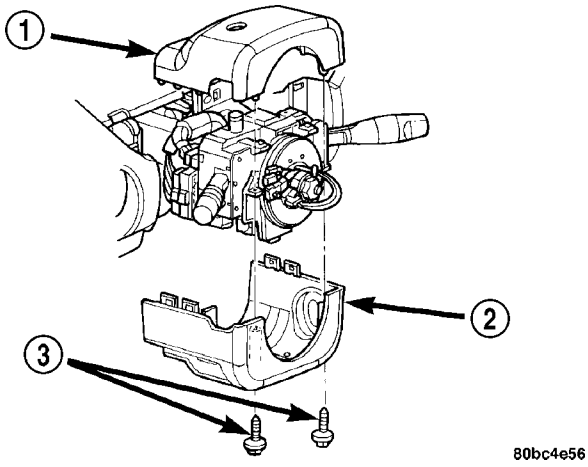

Fig. 2 Steering Column Shrouds

1 - UPPER SHROUD
2 - LOWER SHROUD
3 - MOUNTING SCREWS

(7) Use the following to properly remove the air bag module from the column:

(a) Using a pair of 90° internal snap ring pliers or equivalent, pry open the retaining clip (Fig. 3) at the top rear of the steering wheel to release the top retaining pin (Fig. 4). Pull or press rearward on the airbag module while doing this. The pin will disengage.

(b) Using a pair of 90° internal snap ring pliers or equivalent, pry open the retaining clip (Fig. 5) at the bottom rear of the steering wheel and at he same time gently pry the pin away from the retaining clip using a pocket screwdriver or equivalent, so it can slide through the middle of the clip. Use the screwdriver to push the pin through the clip.

(c) Pull the module outward enough to expose the wire harness connections. Disconnect the two harness connectors on the module (squib and horn feed) (Fig. 6).

(d) Remove the airbag module from the vehicle.

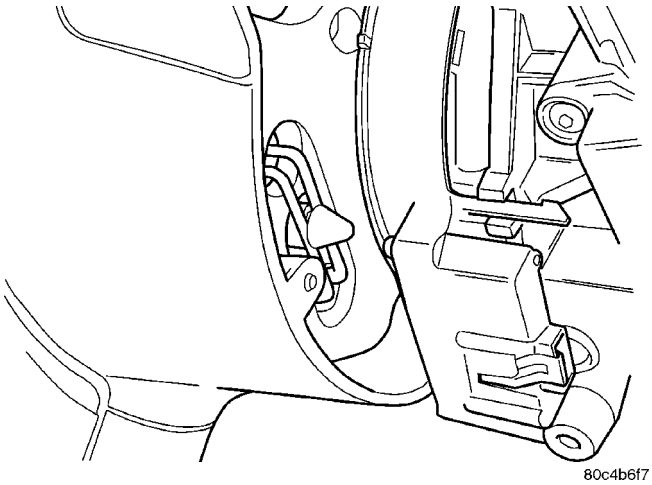

Fig. 3 Driver Airbag Pin Retaining Clip

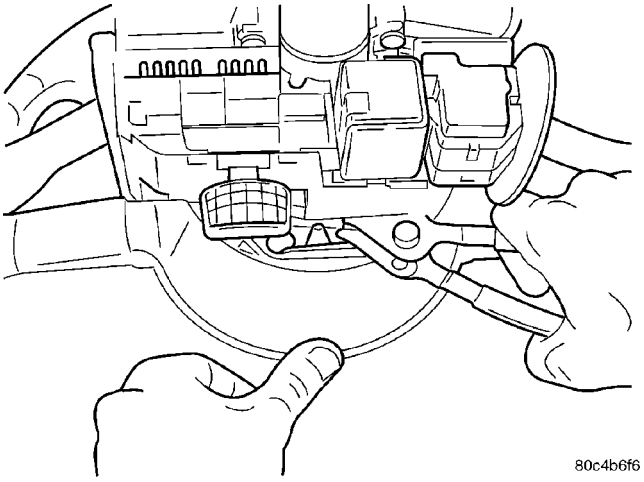

Fig. 4 Upper Driver Airbag Pin Retaining Clip Removal/Installation

COLUMN (Continued)

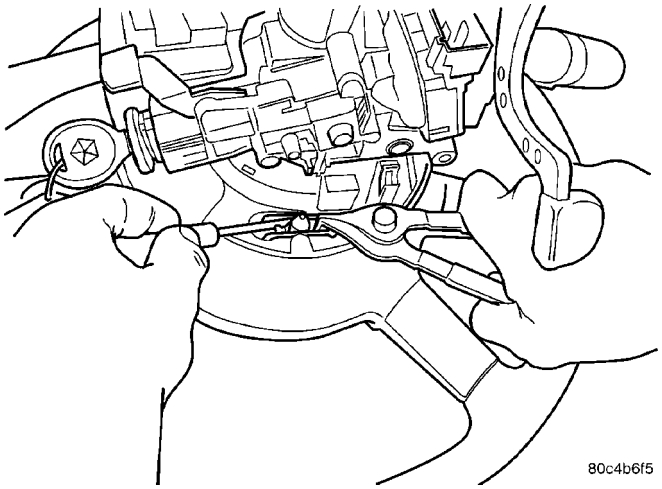

Fig. 5 Lower Driver Airbag Pin Retaining Clip Removal/Installation

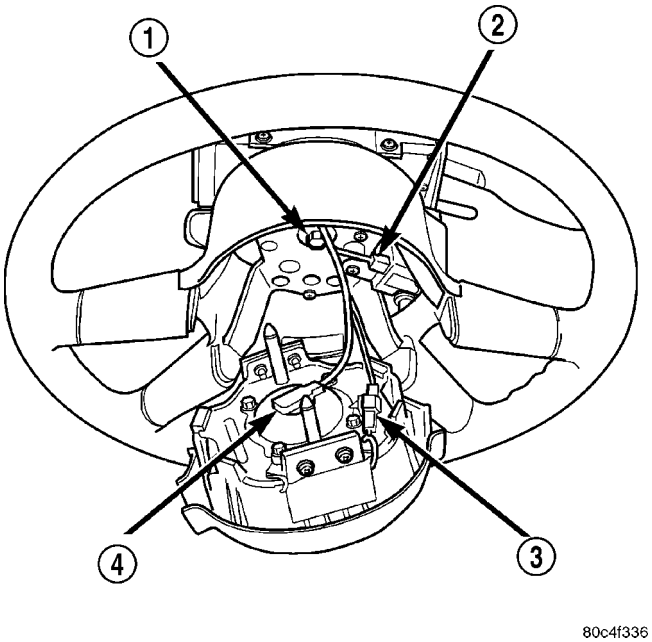

Fig. 6 Electrical Connectors

1 - STEERING WHEEL RETAINING BOLT
2 - SPEED CONTROL SWITCH CONNECTOR
3 - HORN SWITCH CONNECTOR
4 - AIRBAG CONNECTOR

(8) Disconnect the speed control switch wiring harness connector (Fig. 6).

(9) Holding the steering wheel firmly in place, remove the steering wheel retaining bolt from the steering column shaft in the center of the steering wheel (Fig. 6).

CAUTION: When installing a wheel puller on the steering wheel, be sure the puller bolts are fully seated in the threaded holes on the steering wheel. If the bolts are not fully seated in the threaded holes, the threads may be stripped out of the steering wheel when attempting to remove the steering wheel. Take care not to over-thread the puller bolts such that they contact the clockspring possibly damaging it.
Also, threading the retaining bolt back in the end of the shaft until approximately 13 mm (0.5 in.) of thread is showing between the wheel and the head of the bolt allows a safe reaction surface for the puller to work against.

(10) Thread the wheel retaining bolt back into the end of the shaft until approximately 13 mm (0.5 in.) of thread is showing between the wheel and the head of the bolt.

(11) Install a steering wheel puller on the steering wheel.

CAUTION: Do not bump or hammer on steering wheel or steering column shaft when removing steering wheel from steering column.

(12) Holding the steering wheel firmly in the STRAIGHT-AHEAD position, remove steering wheel from the steering column shaft using the puller. Remove the wheel retaining bolt and the steering wheel.

(13) At the base of the column, remove the steering column coupling retainer pin, back off the pinch bolt nut, and remove the steering column coupling pinch bolt (Fig. 7) (the pinch bolt nut is caged to the coupling and is not removable). Separate the upper and lower steering column couplings.

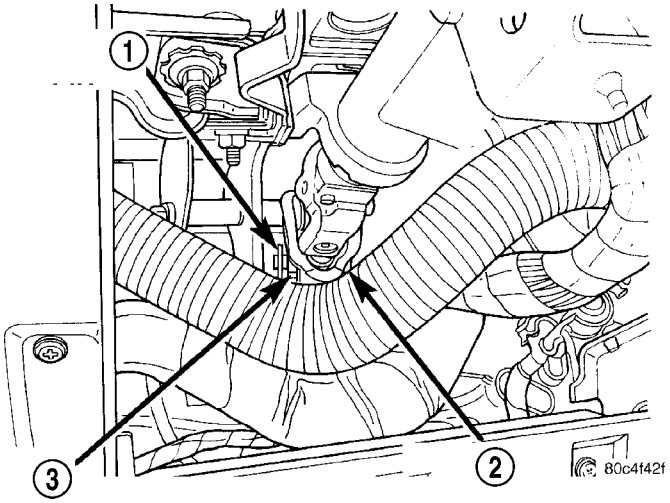

Fig. 7 Coupling Connection

1 - RETAINING PIN
2 - PINCH BOLT
3 - NUT

COLUMN (Continued)

(14) If the vehicle is equipped with a automatic transaxle, disconnect the automatic transaxle ignition interlock cable from the steering column. Depress the tab on top of the cable connector and remove the cable from the back side of the steering column ignition cylinder housing (Fig. 8).

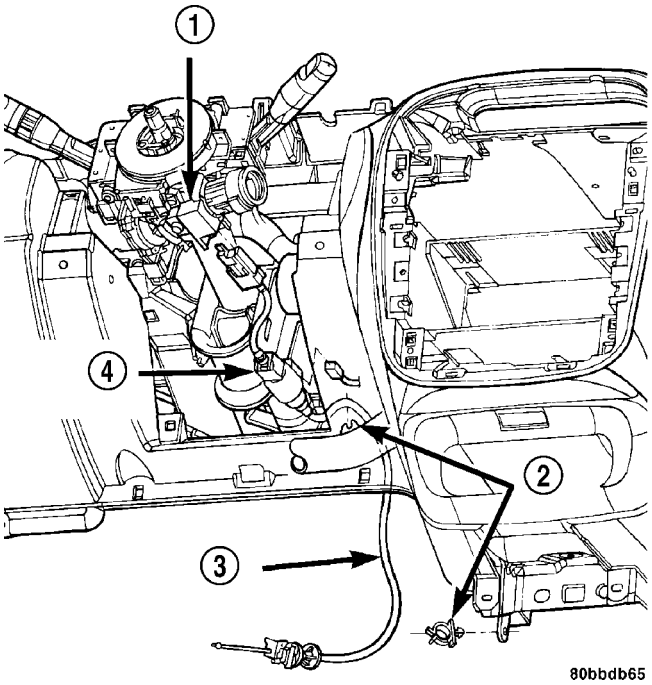

Fig. 8 Interlock Cable

1 - IGNITION SWITCH
2 - CLIP
3 - INTERLOCK CABLE
4 - BTSI SOLENOID

NOTE: If the same steering column is to be reinstalled, clamp the tilt lever to lock the column in place so that it can be easily reinstalled in the same orientation.

(15) Remove the two lower mounting nuts attaching the steering column to the instrument panel (Fig. 9).

(16) Remove the two upper mounting nuts attaching the steering column to the instrument panel (Fig. 9).

(17) Lower the steering column away from the instrument panel.

(18) Disconnect the wiring harness electrical connector from the clockspring (Fig. 10).

(19) Disconnect the wiring harness electrical connectors from the multi-function switch, windshield wiper switch, and ignition switch (Fig. 11).

(20) If the vehicle is equipped with a Sentry Key Immobilizer Module (SKIM), disconnect its electrical connector (Fig. 12).

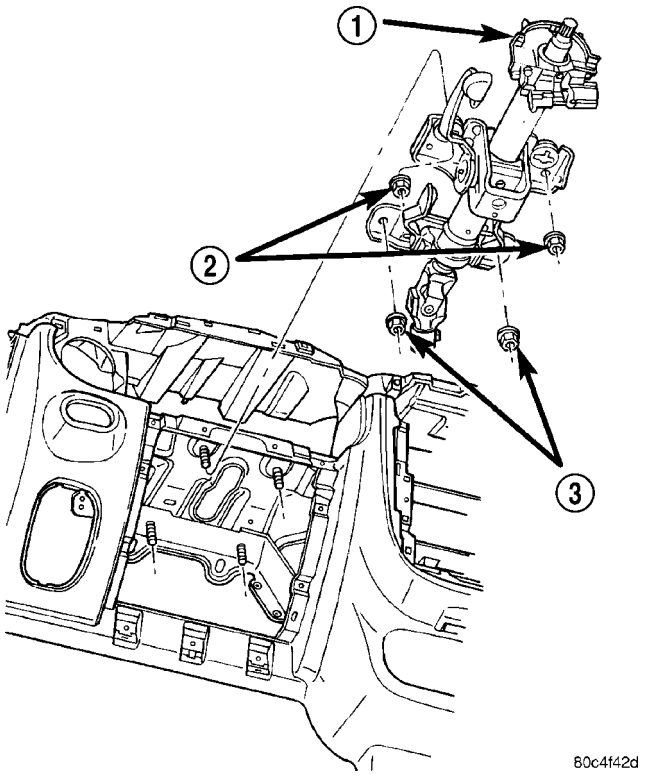

Fig. 9 Steering Column Mounting Nuts

1 - STEERING COLUMN
2 - UPPER MOUNTING NUTS
3 - LOWER MOUNTING NUTS

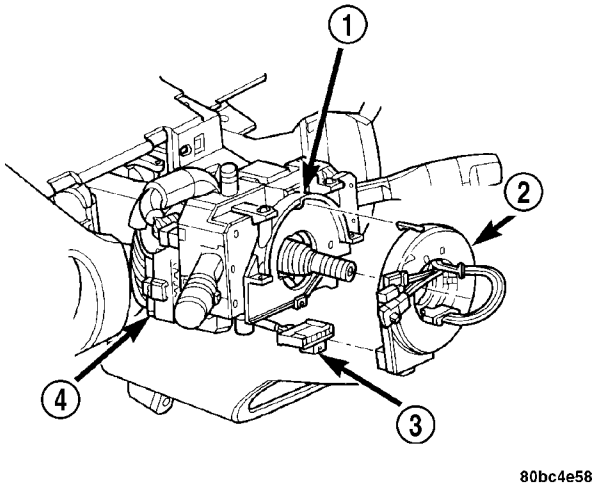

Fig. 10 Clockspring Electrical Connector

1 - STEERING COLUMN
2 - CLOCK SPRING
3 - CLOCK SPRING ELECTRICAL CONNECTOR
4 - IGNITION SWITCH ELECTRICAL CONNECTOR

COLUMN (Continued)

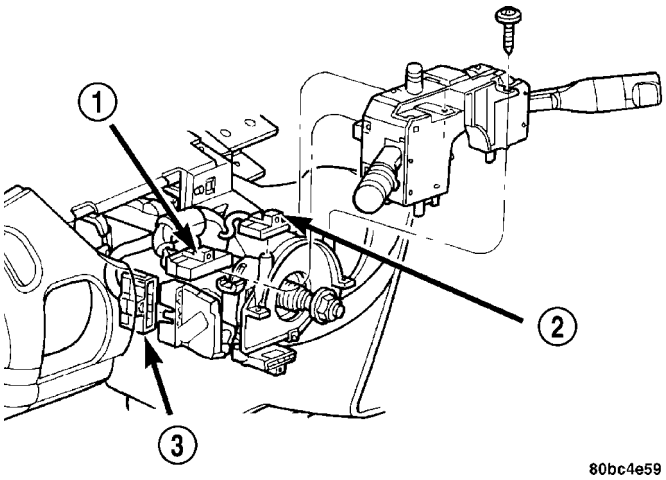

Fig. 11 Electrical Connectors

1 - MULTI-FUNCTION SWITCH ELECTRICAL CONNECTOR
2 - WINDSHIELD WIPER SWITCH ELECTRICAL CONNECTOR
3 - IGNITION SWITCH ELECTRICAL CONNECTOR

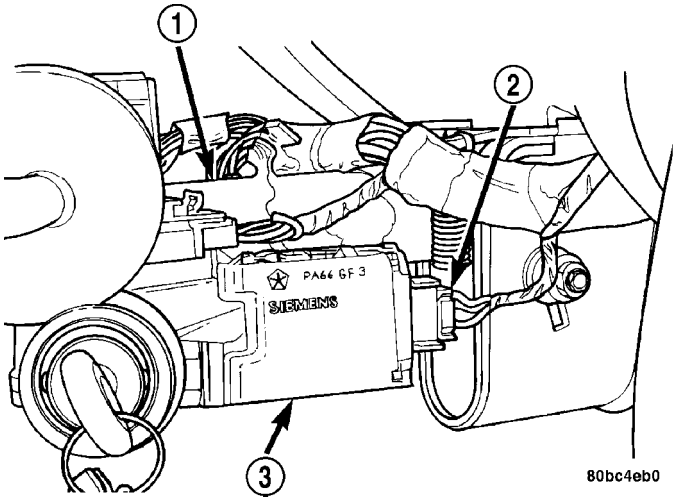

Fig. 12 SKIM Electrical Connector

1 - STEERING COLUMN
2 - SKIM ELECTRICAL CONNECTOR
3 - SKIM

(21) Remove the steering column from the vehicle.

(22) If the steering column is being replaced, perform the following:

(a) Remove the ignition key cylinder from the steering column. To do this, insert the key and turn the ignition key cylinder to the ON position. Next, depress the retaining tab and remove the Ignition key cylinder by pulling the key and cylinder straight out of the column together (Fig. 13).

(b) Disengage the latch hooks on the back of the clockspring by lifting the clockspring slightly to clear the column housing with the top latch hook. Next, lower the clockspring slightly to do the same for the lower latch hook (Fig. 14). Remove the clockspring from the column.

(c) Remove the two screws securing the multi-function/windshield wiper switch to the steering column (Fig. 15). Pull the switch straight away from the column to remove it.

(d) If the column is equipped with a SKIM, remove the module from the column by removing the two mounting screws and sliding the SKIM off the non-halo trim ring (Fig. 16).

(e) Remove the non-halo trim ring from the column by unclipping it from the ignition cylinder housing (Fig. 16).

(f) If necessary, remove the ignition switch from the steering column by first removing the mounting screw (Fig. 17). Once the screw is removed, pull the switch straight out away from the column ignition cylinder housing.

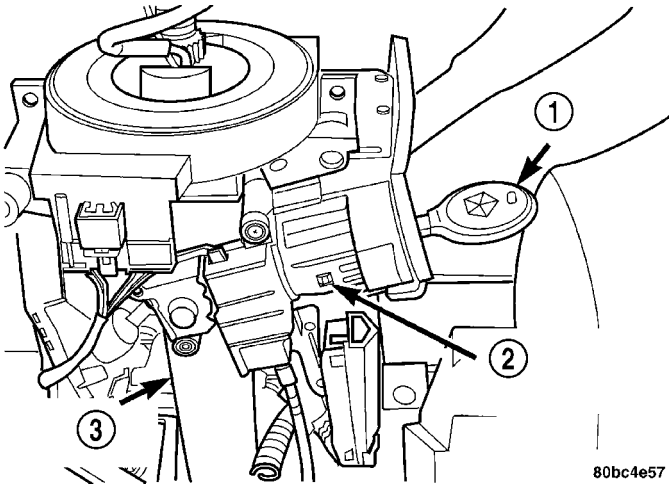

Fig. 13 Ignition Key Cylinder Retaining Tab

1 - IGNITION KEY
2 - RETAINING TAB
3 - STEERING COLUMN

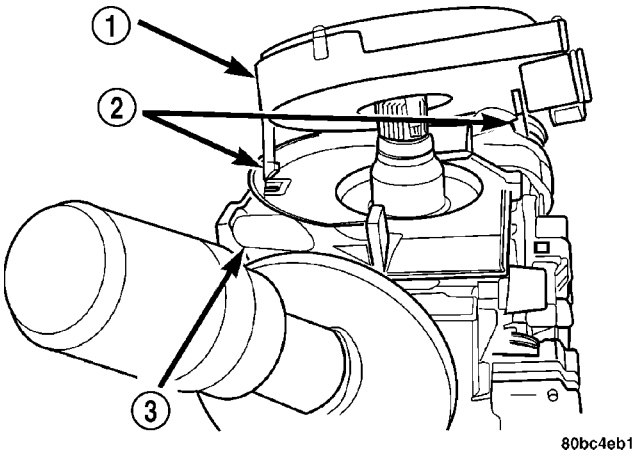

Fig. 14 Clockspring Latch Hooks

1 - CLOCK SPRING
2 - LATCH HOOKS
3 - STEERING COLUMN

COLUMN (Continued)

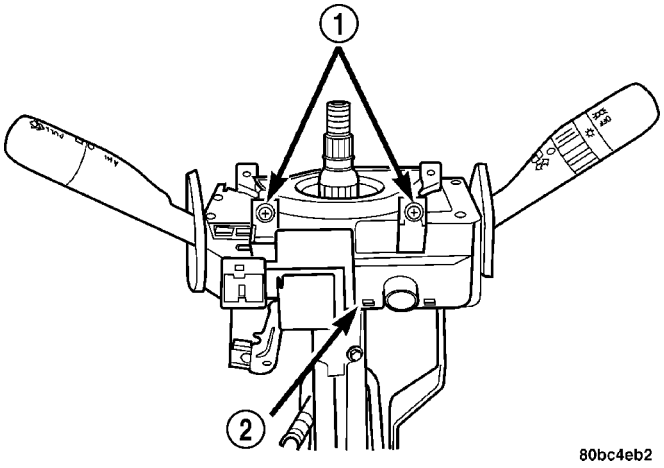

Fig. 15 Multi-function/Wiper Switch Mounting

1 - MOUNTING SCREWS
2 - MULTI-FUNCTION/WINDSHIELD WIPER SWITCH ASSEMBLY

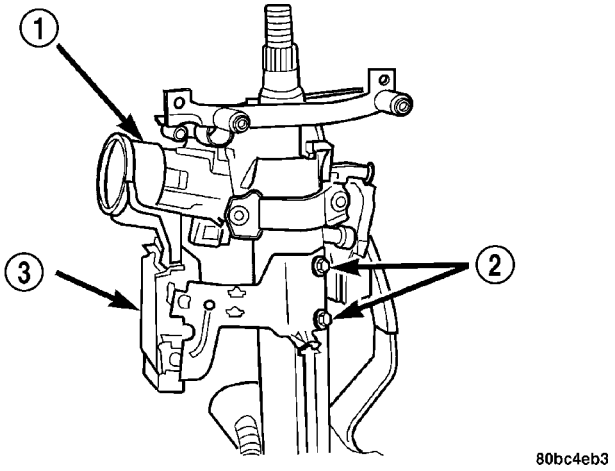

Fig. 16 SKIM Mounting

1 - HALO TRIM RING
2 - MOUNTING SCREWS
3 - SKIM

REMOVAL - RHD

Right-Hand-Drive steering column is typical of Left-Hand-Drive. (Refer to 19 - STEERING/COLUMN - REMOVAL - LHD)

INSTALLATION

INSTALLATION

(1) If the steering column is being replaced, perform the following on the column before installing it on the vehicle:

(a) Ensure the ignition switch is positioned in the ON position if the ignition switch needs to be installed.

(b) If necessary, Install the ignition switch on the steering column by pushing the tapered end onto the shaft and steering column ignition cylinder housing. Install the screw securing the switch to the column (Fig. 17).

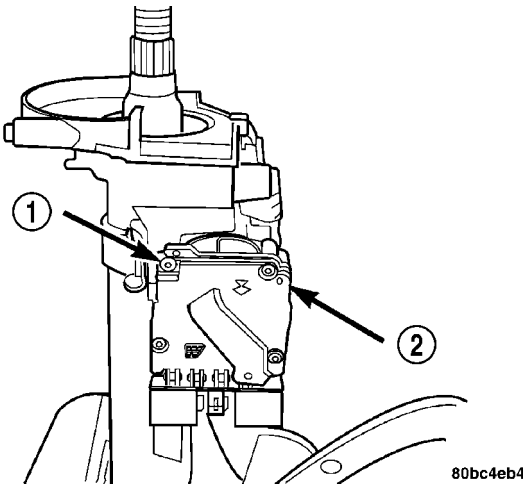

Fig. 17 Ignition Switch Mounting

1 - MOUNTING SCREW
2 - IGNITION SWITCH

(c) Install the non-halo trim ring on the column until its tabs snap into place on the ignition cylinder housing (Fig. 16).

(d) If the column is equipped with a Sentry Key Immobilizer Module (SKIM), install the module on the column by sliding the module onto the non halo trim ring and installing the two mounting screws (Fig. 16). Tighten the mounting screws to a torque of 3 N·m (25 in. lbs.).

(e) Position the multi-function/windshield wiper switch in onto the top of the column and install the two screws securing the switch in place (Fig. 15).

(f) Place the clockspring onto the end of the column engaging the clockspring latch hooks into the column (Fig. 14).

(g) Install the ignition key cylinder in the steering column. To do this, first position the key cylinder in the ON position (with the key in it) so the retaining tab can be depressed. Push key cylinder into the column ignition cylinder housing until the retaining tab locks into place (Fig. 13).

NOTE: When installing a tilt column, do not release the tilt lever from the locked position until after the column is installed on the instrument panel.

(2) Install the steering column into steering column access opening in the lower instrument panel.

(3) Align the slots in the mounting brackets on the steering column with the studs in the instrument panel (Fig. 9) Loosely attach the column to the instrument panel lower mounting studs using the two lower mounting nuts.

COLUMN (Continued)

(4) If the vehicle is equipped with a SKIM, Connect its wiring harness electrical connector (Fig. 12).

(5) Connect the wiring harness electrical connectors to the multi-function switch, windshield wiper switch, and ignition switch (Fig. 11).

(6) Connect the wiring harness electrical connector to the clockspring (Fig. 10).

(7) Lift the column into mounting position on the instrument panel and install the two upper mounting nuts (Fig. 9). Tighten all four (upper and lower) mounting nuts to a torque of 17 N·m (150 in. lbs.).

(8) If the vehicle is equipped with an automatic transaxle, connect the automatic transaxle ignition interlock cable to the steering column by pushing the end of the cable into the back side of the ignition cylinder housing until it snaps into place (Fig. 8).

(9) If not already positioned, position the steering column shaft in the correct position for mounting to the lower coupling. To do this, turn the steering wheel end of the shaft until the missing spline area on that end of the shaft faces straight up.

(10) Verify the front wheels of vehicle are in the STRAIGHT-AHEAD position.

NOTE: Do not tighten the coupling pinch bolt anytime the vehicle is not at curb riding height. It may cause unwanted conditions within the steering column if the vehicle is suspended in any manner when the pinch bolt is tightened.

(11) Reconnect the steering column lower coupling to the steering column upper coupling (Fig. 7). Install the coupling pinch bolt an tighten the pinch bolt nut to a torque of 28 N·m (250 in. lbs.). Install the pinch bolt retainer pin.

(12) Install the knee blocker.

(13) Install the silencer pad below the knee blocker panel.

CAUTION: If there is any question as to whether the clockspring is in the centered position of travel, the clockspring needs to be recentered before installing the steering wheel. If the clockspring is not centered, it may be overextended, causing the clockspring to become inoperative.

(14) If necessary, recenter the clockspring. To center the clockspring, use the following procedure:

- Using your fingers, rotate the clockspring rotor in the CLOCKWISE DIRECTION to the end of travel. Do not apply excessive torque.
- From the end of travel, rotate the rotor two full turns and an additional one half turn in the COUNTERCLOCKWISE DIRECTION. (The wires should end up toward the top of the clockspring).

(15) Ensure the three foam rubber driver airbag retaining clip pads are still in place on the rear of the steering wheel (Fig. 18). Replace any missing pads.

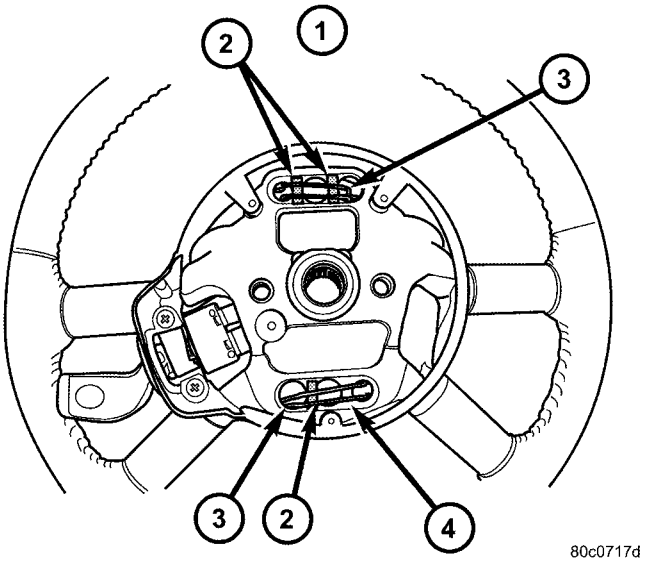

Fig. 18 Foam Rubber Pad Locations

1 - TOP REAR OF STEERING WHEEL
2 - FOAM RUBBER PADS
3 - DRIVER AIRBAG RETAINING CLIP
4 - HORN GROUND AREA- NO PAD HERE

CAUTION: Do not install the steering wheel onto the shaft of the steering column by driving it onto the shaft.

(16) Feed the clockspring wiring leads through the hole in the steering wheel. Align the steering wheel's wide mounting spline with the steering column shaft missing spline area and push the wheel onto the shaft. Make sure the clockspring lines up with the back of the wheel and does not bind.

(17) Install the steering wheel retaining bolt and tighten it until the steering wheel is fully installed on shaft. Tighten the steering wheel retaining bolt to a torque of 54 N·m (40 ft. lbs.).

(18) Connect the wiring harness connector to the speed control switch (Fig. 6).

(19) Connect the squib wire to the driver airbag module (Fig. 6). Make airbag connection by pressing straight in on the connector. The connector should be fully seated. Feel for positive snap to assure positive connection.

(20) Connect the horn switch electrical connector.

(21) Rotate the steering wheel 90 degrees in either direction.

COLUMN (Continued)

(22) Place driver airbag into position and firmly snap both pins into place. **Listen for the audible click at each pin. Visually check that both pins are properly seated between the legs of the clips.**

(23) Install the upper and lower steering column shrouds onto the steering column (Fig. 2). Snap the two shrouds together, then install and tighten the two screws securing the shrouds to the column.

NOTE: When reconnecting the battery on a vehicle that has had the driver airbag removed, the following procedure should be used.

(24) Reconnect the ground cable to the negative post of the battery in the following manor:

(a) Connect a scan tool (DRBIII®) to the data link diagnostic connector located below the steering column.

(b) Turn the ignition key to the ON position. Exit the vehicle with the scan tool leaving the scan tool harness plugged in.

(c) Ensuring that there are no occupants in the vehicle, connect the ground (-) cable to the negative post of the battery.

(d) Using the scan tool, read and record any fault codes. Refer to the Appropriate Diagnostic Information if any faults are found.

(e) Erase any stored faults if there are no active fault codes. If a problem exists, the fault code will not erase.

(f) Reach around behind the steering wheel (just in front of the instrument cluster) and turn the ignition key to OFF, then back ON while observing the instrument cluster airbag indicator lamp. It should go on for six to eight seconds, then go out. This will indicate that the airbag system is functioning normally. If airbag indicator lamp fails to light, blinks on and off, or goes on and stays on, there is an airbag system malfunction. Refer to the Appropriate Diagnostic Information to diagnose a system malfunction.

(25) Turn the key to OFF and remove the scan tool from the vehicle.

(26) Test the operation of the horn, wipers and any other functions that are steering column operated. If applicable, reset the radio and the clock.

(27) If the steering column is a tilt column, verify the tilt mechanism operates properly.

(28) Road test the vehicle to ensure proper operation of the steering system and the speed control system.

INSTALLATION - RHD

Right-Hand-Drive steering column is typical of Left-Hand-Drive. (Refer to 19 - STEERING/COLUMN - INSTALLATION - LHD)

SPECIFICATIONS - STEERING COLUMN FASTENER TORQUE

DESCRIPTION	N·m	Ft. Lbs.	In. Lbs.
Coupling Pinch Bolt	28	21	250
SKIM Mounting Screws	3	—	25
Speed Control Switch Screw	2	—	20
Steering Column Mounting Nuts	17	—	150
Steering Wheel Retaining Bolt	54	40	—

IGNITION SWITCH

REMOVAL

The ignition switch attaches to the lock cylinder housing on the end opposite the lock cylinder (Fig. 19) . For ignition switch terminal and circuit identification, refer to the Wiring Diagrams sections.

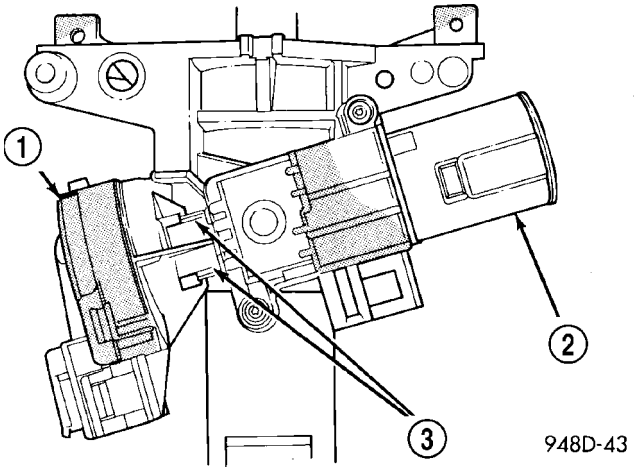

Fig. 19 Ignition Switch—Viewed From Below Column

1 - IGNITION SWITCH
2 - LOCK CYLINDER HOUSING
3 - RETAINING TABS

IGNITION SWITCH (Continued)

(1) Remove the air cleaner lid, disconnect the inlet air temperature sensor and makeup air hose.

(2) Disconnect negative cable from battery.

(3) Place key cylinder in RUN position. Through the hole in the lower shroud, depress lock cylinder retaining tab and remove key cylinder (Fig. 20) .

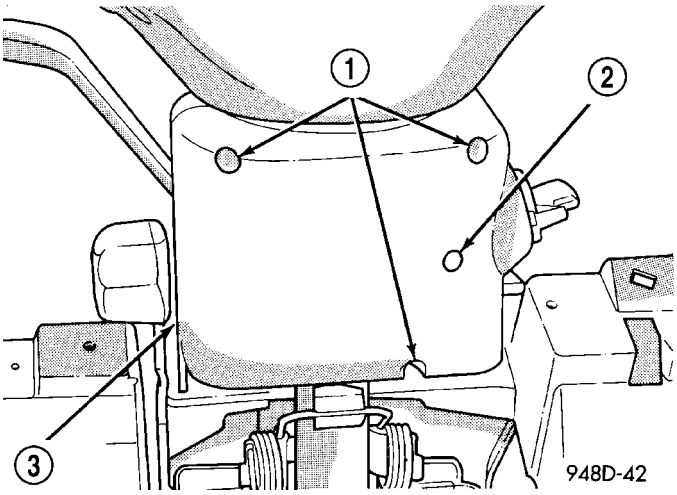

Fig. 20 Steering Column Shrouds

1 - SCREW ACCESS HOLE
2 - TAB ACCESS HOLE
3 - LOWER SHROUD

(4) Remove upper and lower shrouds from steering column.

(5) Disconnect electrical connectors from ignition switch (Fig. 21) .

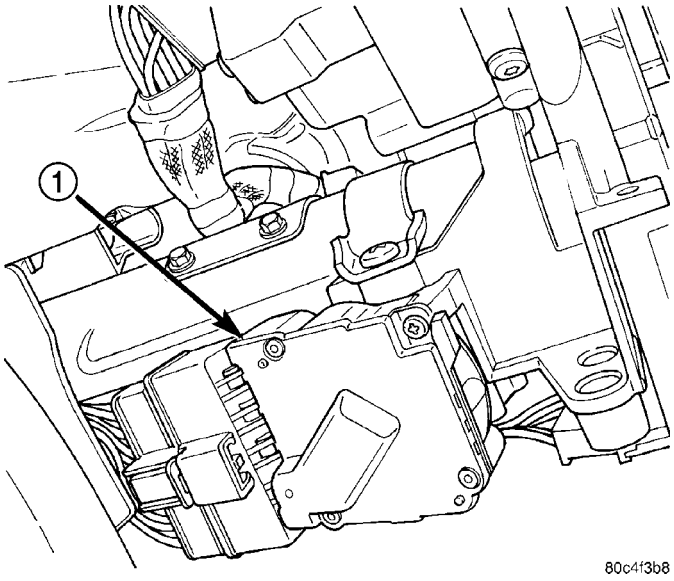

Fig. 21 Ignition Switch

1 - IGNITION SWITCH

(6) Remove the 2 screws on the top of the multi-function switch and relocate (Fig. 22) .

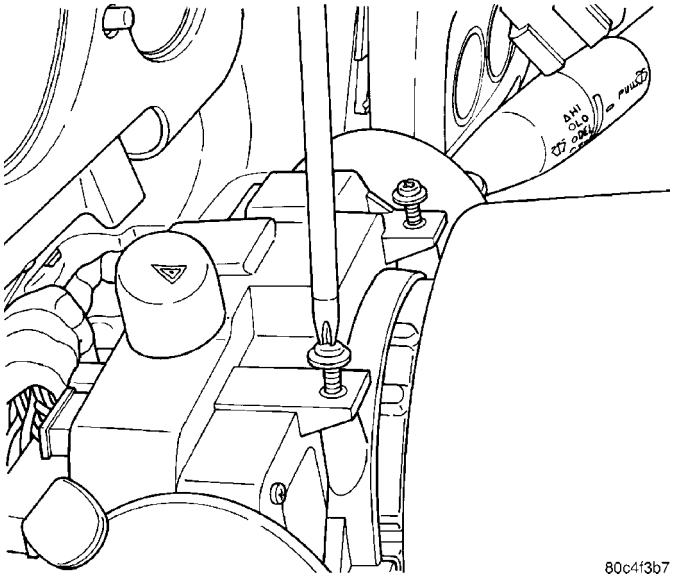

Fig. 22 Multi-Function Switch

(7) Remove ignition switch mounting screw (Fig. 23) with a #10 Torx® bit.

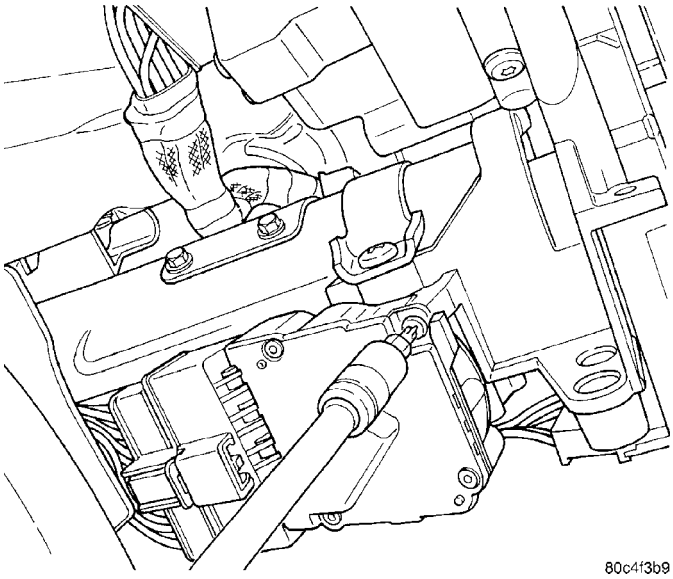

Fig. 23 Ignition Switch Mounting Screw

(8) Pull ignition switch from steering column (Fig. 24) .

INSTALLATION

(1) Ensure the ignition switch is in the RUN position and the actuator shaft in the lock housing is in the RUN position.

IGNITION SWITCH (Continued)

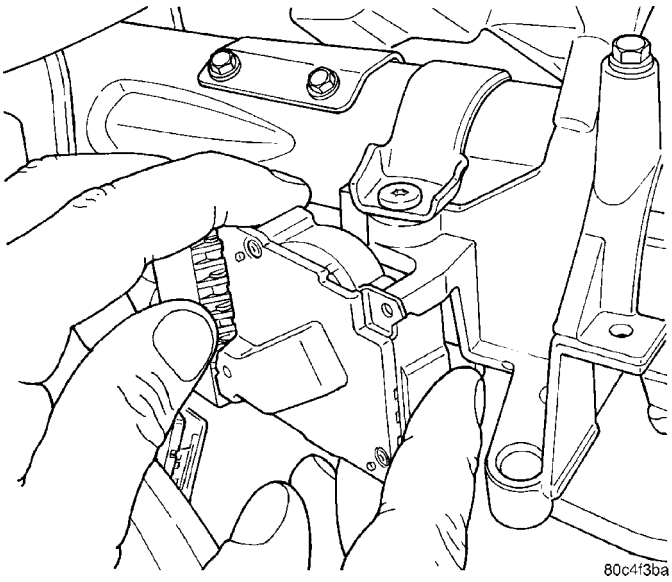

Fig. 24 Removing Ignition Switch

(2) Carefully install the ignition switch. The switch will snap over the retaining tabs (Fig. 25). Install mounting screw (Fig. 23).

(3) Install electrical connectors to ignition switch.

(4) Install the multi-function switch and tighten the 2 screws (Fig. 22).

(5) Install upper and lower shrouds.

(6) Install key cylinder (cylinder retaining tab will depress only in the RUN position).

(7) Connect negative cable to battery.

(8) Install the air cleaner lid, connect the inlet air temperature sensor and makeup air hose.

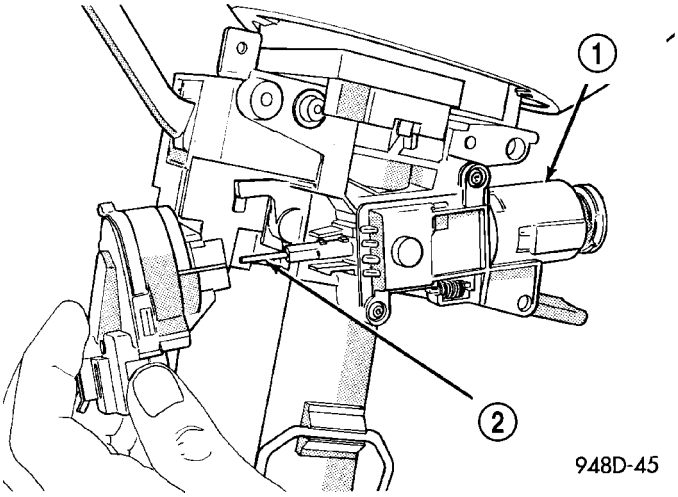

Fig. 25 Ignition Switch Installation

1 - LOCK CYLINDER HOUSING
2 - SHAFT

(9) Check for proper operation of ignition switch and key-in warning switch.

KEY/LOCK CYLINDER

REMOVAL

The lock cylinder is inserted in the end of the housing opposite the ignition switch. The ignition key rotates the cylinder to 5 different detentes (Fig. 26) :

- Accessory
- Off (lock)
- Unlock
- On/Run
- Start

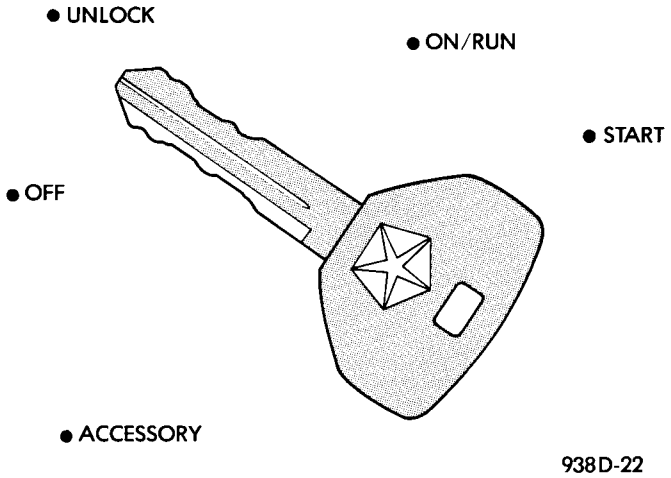

Fig. 26 Ignition Lock Cylinder Detentes

(1) Disconnect negative cable from battery.

(2) Place key cylinder in RUN position. Through the hole in the lower shroud, depress lock cylinder retaining tab and remove key cylinder.

INSTALLATION

(1) Install key in lock cylinder. Turn key to RUN position (retaining tab on lock cylinder can be depressed).

(2) The shaft at the end of the lock cylinder aligns with the socket in the end of the housing. To align the socket with the lock cylinder, ensure the socket is in the Run position (Fig. 27).

(3) Align the lock cylinder with the grooves in the housing. Slide the lock cylinder into the housing until the tab sticks through the opening in the housing.

(4) Turn the key to the Off position. Remove the key.

(5) Connect negative cable to battery.

KEY/LOCK CYLINDER (Continued)

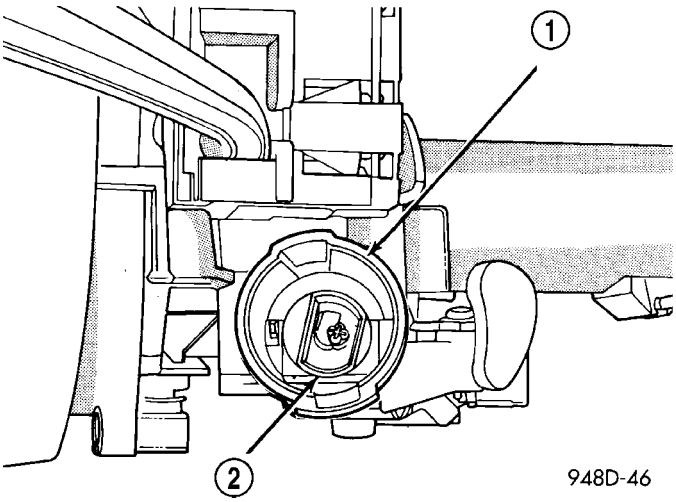

Fig. 27 Socket in Lock Cylinder Housing

1 - LOCK CYLINDER HOUSING
2 - SOCKET

SHROUD - UPPER/LOWER

REMOVAL

(1) Fold down and remove the knee blocker panel below steering column.

(2) Remove two column shroud retaining screws.

(3) Separate upper and lower steering column shrouds (Fig. 28) and remove from vehicle.

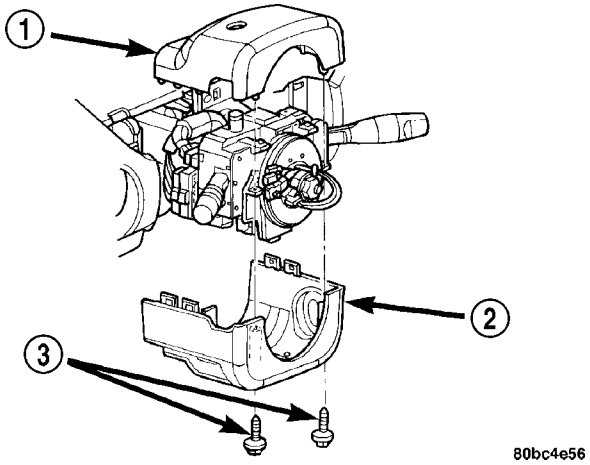

Fig. 28 Steering Column Shrouds

1 - UPPER SHROUD
2 - LOWER SHROUD
3 - MOUNTING SCREWS

INSTALLATION

(1) Connect the upper and lower steering column shrouds (Fig. 28).

NOTE: Ensure that the locking tabs on the inboard and outboard sides of the shrouds are secure.

(2) Install the two column shroud retaining screws. Torque steering column shroud retaining screws to 2 N·m (18 in. lbs.).

(3) Install the knee blocker panel below the steering column.

STEERING COUPLING - LOWER

DESCRIPTION

The steering column lower coupling incorporates an dual-stage intermediate shaft with a universal joint at its base. The lower coupling is located between the steering column's upper coupling and the input shaft of the steering gear (Fig. 29). A collar is also placed near the center of shaft.

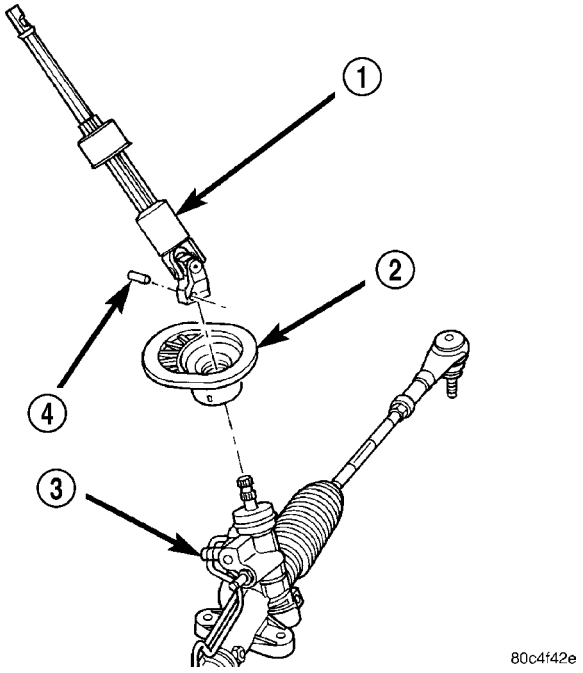

Fig. 29 Steering Column Lower Coupling (Typical)

1 - LOWER COUPLING
2 - SEAL
3 - STEERING GEAR
4 - ROLL PIN

OPERATION

The steering column lower coupling connects the steering column shaft to the steering gear input shaft. Working with a universal joint located on the end of the steering column shaft, the steering column lower coupling allows for the misalignment of the steering column with the steering gear.

STEERING COUPLING - LOWER (Continued)

There is a dual-stage collapsible sliding joint located in the center of the lower coupling intermediate shaft (Fig. 30). It allows the shaft to collapse (shorten) anytime there is rearward movement of the steering gear, such as when the vehicle is involved in a front end collision involving the steering gear. It takes approximately 400 lbs. of force to slide the joint.

The collar mounted near the center of the shaft is there to provide a clean surface for the dash seal to ride upon, sealing the gap between the shaft and the dash panel.

DIAGNOSIS AND TESTING - STEERING COLUMN LOWER COUPLING

The steering column lower coupling and its flexible joint must be inspected whenever any of the following conditions exist:

- After the vehicle has been involved in a collision which deploys the airbag, regardless of the extent of damage to the vehicle.
- After the vehicle has been involved in an undercarriage impact which results in any type of damage or bending of front suspension components or the frame of the vehicle.
- Under any conditions which result in the steering gear, steering column or steering column shaft receiving a force great enough to move the steering column or shaft forward or rearward in the vehicle.

Inspect the lower coupling shaft and its flexible joint for any of the following conditions:

- seized or binding bearings
- loose bearing stakes
- bearings not fully seated
- shaft bent
- shaft too short (see measurement procedure below)

Upon inspection, if any of the above conditions exist, replacement of the entire steering column lower coupling is necessary.

The shaft area of the lower coupling is a dual-stage type (Fig. 30). It has a Stage 1 and a Stage 2. Upon impact, Stage 1 slides into Stage 2. Measure the length of Stage 1 from Point A to Point B (Fig. 30). If the distance between Point A and Point B (length of Stage 1) is under 1.5 inches (38 mm), replace the coupling.

REMOVAL

NOTE: Before proceeding, (Refer to 19 - STEERING - WARNING)(Refer to 19 - STEERING/COLUMN - WARNING).

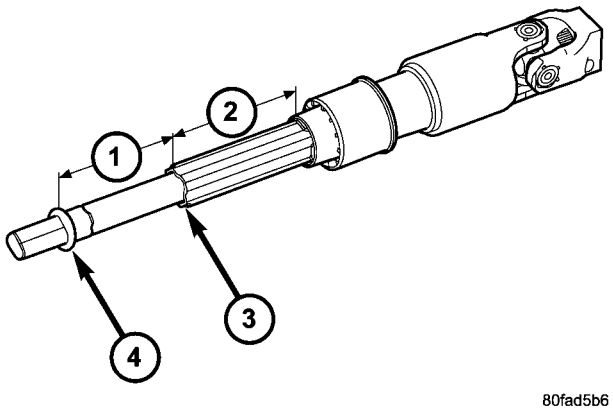

Fig. 30 Dual-Stage Shaft Coupling

1 - STAGE 1
2 - STAGE 2
3 - POINT ″B″
4 - POINT ″A″

(1) Place the steering wheel in the STRAIGHT-AHEAD position. Using a steering wheel holder, lock the steering wheel in place to keep it from rotating (Fig. 31). This keeps the clockspring in the proper orientation.

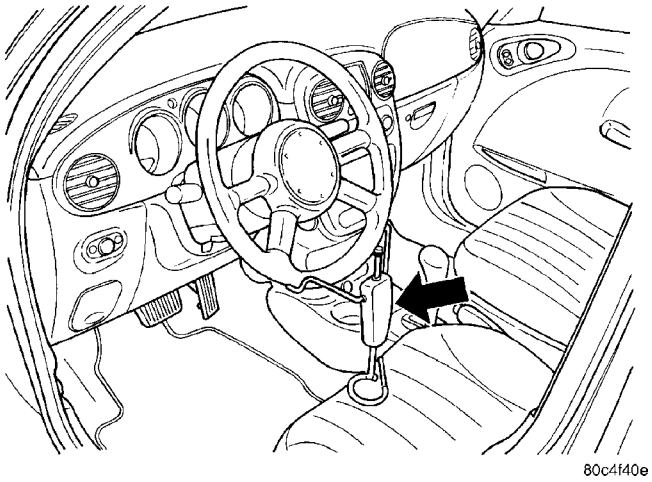

Fig. 31 Steering Wheel Holder

(2) Remove the silencer pad below the knee blocker panel below the steering column.

(3) Fold down and remove the knee blocker.

(4) Remove the steering column coupling retainer pin, back off the pinch bolt nut, and remove the steering column coupling pinch bolt (Fig. 32) (the pinch bolt nut is caged to the coupling and is not removable). Separate the upper and lower steering column couplings.

(5) Raise the vehicle. (Refer to LUBRICATION & MAINTENANCE/HOISTING - STANDARD PROCEDURE)

STEERING COUPLING - LOWER (Continued)

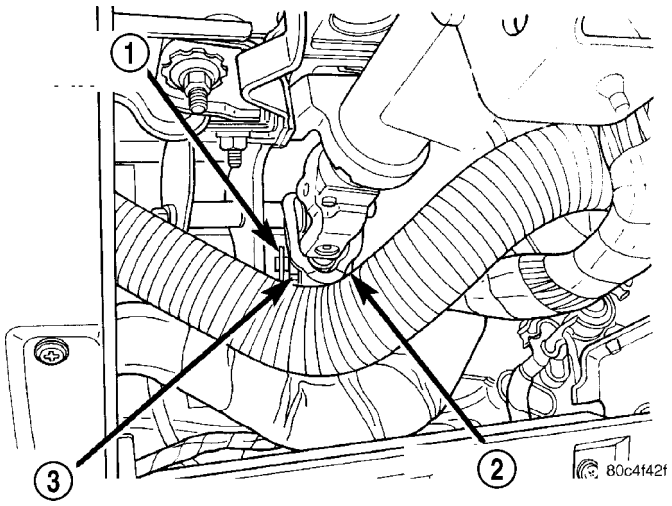

Fig. 32 Steering Column Coupling

1 - RETAINING PIN
2 - PINCH BOLT
3 - NUT

(6) Release the locking tab on the wiring harness connector for the power steering fluid pressure switch, then remove the wiring harness connector from the power steering fluid pressure switch (Fig. 33).

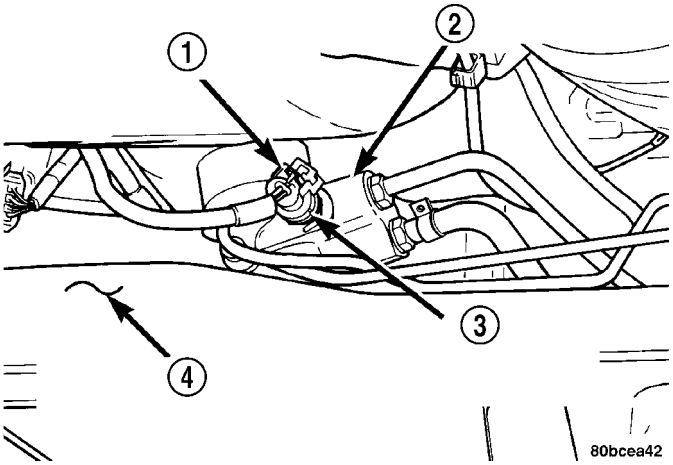

Fig. 33 Power Steering Fluid Pressure Switch

1 - WIRING HARNESS CONNECTOR
2 - POWER STEERING GEAR
3 - POWER STEERING FLUID PRESSURE SWITCH
4 - REAR OF FRONT SUSPENSION CROSSMEMBER

(7) Remove the right front tire and wheel assembly.

(8) Remove the pencil strut from the right front corner of the crossmember and body of the vehicle. (Fig. 34). Remove the washer behind the strut from the torque strut bolt.

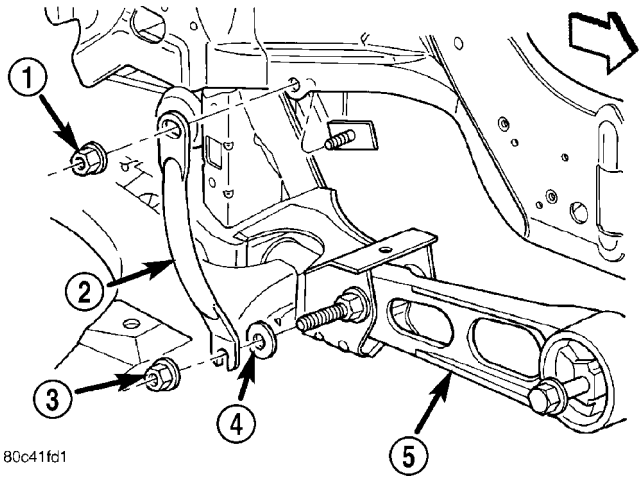

Fig. 34 Strut Mounting

1 - NUT
2 - PENCIL STRUT
3 - NUT
4 - FLAT WASHER
5 - LOWER TORQUE STRUT

(9) Remove the screws fastening the front fascia to the reinforcement as necessary in order to access the drive-belt splash shield forward fastener screw (Fig. 35).

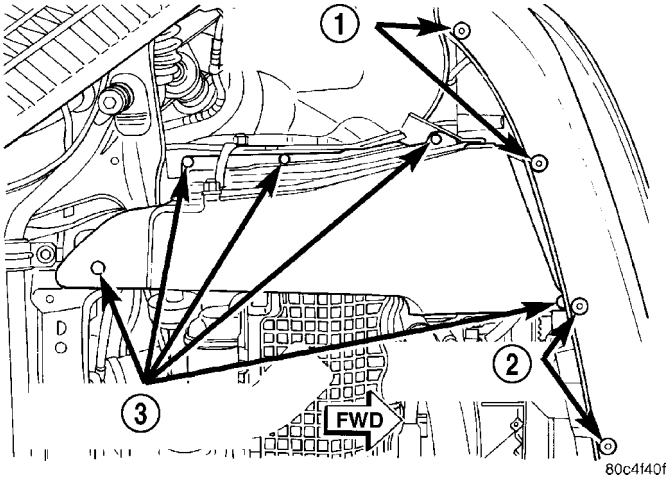

Fig. 35 Fascia And Splash Shield Fasteners

1 - FASCIA FASTENERS
2 - FASCIA FASTENERS
3 - SPLASH SHIELD FASTENERS

(10) Remove the drive-belt splash shield fasteners (Fig. 35). Remove the shield.

(11) Remove the bolt mounting the engine torque strut to the right forward corner of the front suspension crossmember (Fig. 34).

STEERING COUPLING - LOWER (Continued)

NOTE: Before removing the front suspension crossmember from the vehicle, the location of the crossmember must be scribed on the body of the vehicle (Fig. 9). Do this so the crossmember can be relocated, upon reinstallation, against the body of vehicle in the same location as before removal. If the front suspension crossmember is not reinstalled in exactly the same location as before removal, the preset front wheel alignment settings (caster and camber) will be lost.

(12) Using an awl, scribe a line marking the location of where the front suspension crossmember is mounted against the body of the vehicle (Fig. 36).

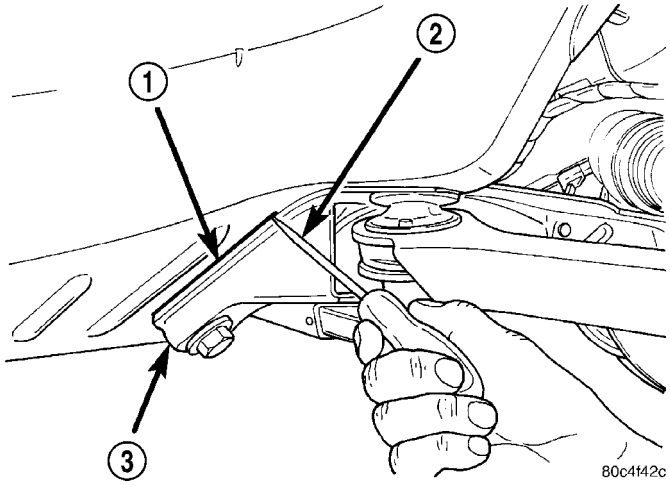

Fig. 36 Marking Crossmember Location

1 - SCRIBED LINE
2 - AWL
3 - CROSSMEMBER

(13) Position a transmission jack under the center of the front suspension crossmember and raise it to support the bottom of the crossmember.

(14) Loosen all six bolts attaching the front suspension crossmember to the frame rails of vehicle. Do not completely remove the two mounting bolts going through the lower control arm rear isolator bushings. They are designed to disengage from the body threads yet stay within the lower control arm rear isolator bushing. Back the two bolts out just enough to disengage the threaded tapping plates in the body of the vehicle. Completely remove the other four bolts.

CAUTION: Lower the steering gear slowly, paying special attention to the power steering fluid hoses. Do not strain or overextend the hoses because damage to the hoses or connecting hardware may occur.

(15) Lower the front suspension crossmember using the transmission jack just enough to allow access to the steering column lower coupling (Fig. 37). When lowering front suspension crossmember, do not let crossmember hang from lower control arms. The weight should be supported by the transmission jack.

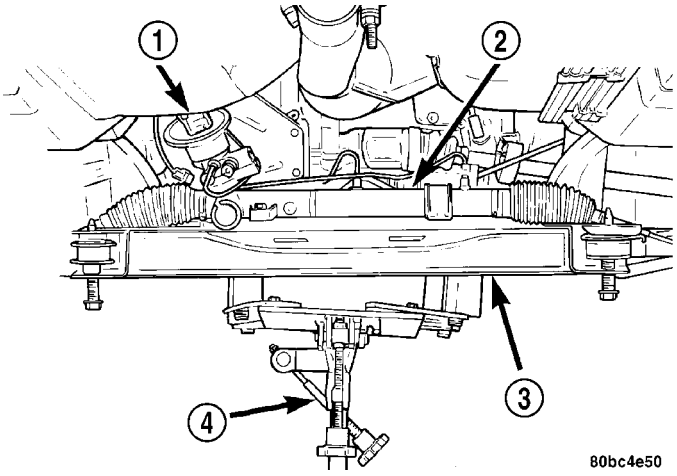

Fig. 37 Crossmember Lowered

1 - STEERING COLUMN LOWER COUPLING
2 - POWER STEERING GEAR
3 - FRONT SUSPENSION CROSSMEMBER
4 - TRANSMISSION JACK

(16) Remove the roll pin securing the steering column lower coupling to the power steering gear pinion shaft using a roll pin punch (Fig. 38). Push the steering column lower coupling up and off of the power steering gear pinion shaft.

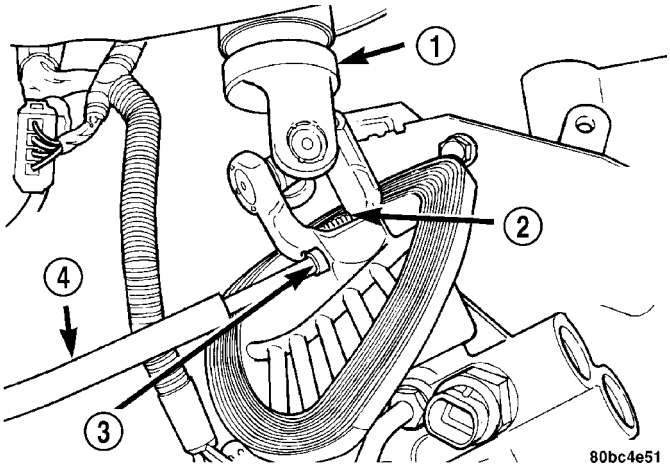

Fig. 38 Coupling Roll Pin

1 - STEERING COLUMN LOWER COUPLING
2 - POWER STEERING GEAR PINION SHAFT
3 - ROLL PIN
4 - ROLL PIN PUNCH

(17) Remove the coupling from the vehicle.

STEERING COUPLING - LOWER (Continued)

INSTALLATION

(1) Push the column end of the steering column lower coupling partway up through the hole in the dash panel, then match the flat on the on the inside of the lower coupling to the flat on the power steering gear pinion shaft and slide the coupling onto the shaft.

(2) Align the roll pin hole in the coupling to the notch in the gear pinion shaft and instal the roll pin through the coupling until it is centered (Fig. 38).

(3) Center the power steering gear rack in its travel.

(4) Using the transmission jack, raise the front suspension crossmember and power steering gear until the crossmember contacts its mounting spot against the body and frame rails of the vehicle. As the crossmember is raised, carefully guide the steering column lower coupling up through its hole in the dash panel.

(5) Start the two crossmember mounting bolts through the lower control arm rear isolator bushings into the tapping plates mounted in the body. Next, install the two front and the two rear mounting bolts attaching front suspension crossmember to frame rails of vehicle. Lightly tighten all six mounting bolts to approximately 2 N·m (20 in. lbs.) to hold the front suspension crossmember in position at this time.

NOTE: When installing the front suspension crossmember back in the vehicle, it is very important that the crossmember be attached to the body in exactly the same spot as when it was removed. Otherwise, the vehicle's wheel alignment settings (caster and camber) will be lost.

(6) Using a soft face hammer, tap the front suspension crossmember back-and-forth or side-to-side until it is aligned with the previously scribed positioning marks on the body of the vehicle (Fig. 36). Once the front suspension crossmember is correctly positioned, tighten the two crossmember mounting bolts through the lower control arm rear isolator bushings to a torque of 250 N·m (185 ft. lbs.), then tighten the four remaining crossmember mounting bolts to a torque of 153 N·m (113 ft. lbs.).

(7) Fasten the engine torque strut to the right forward corner of the front suspension crossmember using its mounting bolt (Fig. 34). Follow the procedure described in the ENGINE section to properly align and tighten the torque strut and it's mounting bolts.

(8) Install the washer on the end of the stud extending from the torque strut bolt (Fig. 34).

(9) Install the pencil strut to the right front corner of the crossmember and body of the vehicle (Fig. 34). Tighten the pencil strut nuts to a torque of 58 N·m (43 ft. lbs.).

(10) Install the drive-belt splash shield and fasteners (Fig. 35).

(11) Install the screws fastening the front fascia to the reinforcement (Fig. 35).

(12) Install the right front tire and wheel assembly. Tighten the mounting nuts to a torque of 135 N·m (100 ft. lbs.).

(13) Reconnect the wiring harness connector from the power steering fluid pressure switch (Fig. 33). Be sure the locking tab on the wiring harness connector is securely latched.

(14) Lower the vehicle.

(15) Install the dash-to-lower coupling seal in place over the lower coupling's plastic collar.

NOTE: Verify that grease is present on the lip of the dash-to-coupling seal where it contacts the coupling's plastic collar.

(16) Inside the passenger compartment, reconnect the steering column lower coupling to the steering column upper coupling (Fig. 32). Install the coupling pinch bolt and tighten the pinch bolt nut to a torque of 28 N·m (250 in. lbs.). Install the pinch bolt retainer pin.

(17) Remove the steering wheel holder.

(18) While looking under the instrument panel at the lower coupling, rotate the steering wheel back-and-forth to verify that the lower coupling does not squeak against the dash-to-coupling seal.

(19) Install the knee blocker.

(20) Install the silencer pad below the knee blocker panel below the steering column.

STEERING WHEEL

REMOVAL

WARNING:

• DO NOT PLACE A NON-DEPLOYED AIRBAG FACE DOWN ON A HARD SURFACE, THE AIRBAG WILL PROPEL INTO THE AIR IF ACCIDENTALLY DEPLOYED, AND COULD RESULT IN SERIOUS OR FATAL INJURY.

• DISCONNECT AND ISOLATE THE BATTERY NEGATIVE (GROUND) CABLE BEFORE BEGINNING STEERING WHEEL REMOVAL OR INSTALLATION. THIS WILL DISABLE THE FRONT AIRBAG SYSTEM. FAILURE TO DISCONNECT THE BATTERY COULD RESULT IN ACCIDENTAL FRONT AIRBAG MODULE DEPLOYMENT AND POSSIBLE PERSONAL INJURY.

• ALLOW THE FRONT AIRBAG SYSTEM CAPACITOR TO DISCHARGE FOR TWO MINUTES BEFORE REMOVING THE STEERING WHEEL OR ANY FRONT AIRBAG SYSTEM COMPONENT.

(1) Adjust the steering wheel so that the tires are in the STRAIGHT-AHEAD position.

(2) Open hood.

(3) Disconnect and isolate the battery negative cable.

(4) Remove the driver airbag. (Refer to 8 - ELECTRICAL/RESTRAINTS/DRIVER AIRBAG - REMOVAL)

(5) While holding the steering wheel firmly in place, remove the retaining bolt securing the steering wheel to the steering column shaft (Fig. 39).

CAUTION: When installing a wheel puller on the steering wheel, be sure the puller bolts are fully seated in the threaded holes on the steering wheel. If the bolts are not fully seated in the threaded holes, the threads may be stripped out of the steering wheel when attempting to remove the steering wheel. Take care not to over-thread the puller bolts such that they contact the clockspring possibly damaging it.
Also, threading the retaining bolt back in the end of the shaft until approximately 13 mm (0.5 in.) of thread is showing between the wheel and the head of the bolt allows a safe reaction surface for the puller to work against.

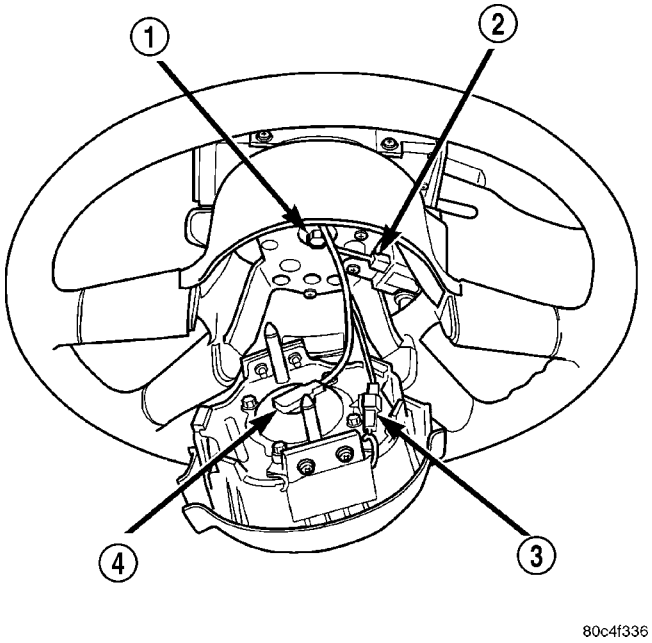

Fig. 39 Steering Wheel Retaining Bolt

1 - STEERING WHEEL RETAINING BOLT
2 - SPEED CONTROL SWITCH CONNECTOR
3 - HORN SWITCH CONNECTOR
4 - AIRBAG CONNECTOR

(6) Thread the wheel retaining bolt back into the end of the shaft until approximately 13 mm (0.5 in.) of thread is showing between the wheel and the head of the bolt.

(7) Install a steering wheel puller on the steering wheel.

CAUTION: Do not bump or hammer on steering wheel or steering column shaft when removing steering wheel from steering column.

(8) While holding the steering wheel firmly in the STRAIGHT-AHEAD position, remove steering wheel from the steering column shaft using the puller.

(9) Remove the wheel retaining bolt and the steering wheel. Take care to feed the wires gently through the holes in the steering wheel.

INSTALLATION

(1) Confirm that:

(a) The front wheels are in the STRAIGHT-AHEAD position.

(b) The turn signal stalk is in the neutral position.

STEERING WHEEL (Continued)

(2) Ensure the three foam rubber driver airbag retaining clip pads are still in place on the rear of the steering wheel (Fig. 40). Replace any missing pads.

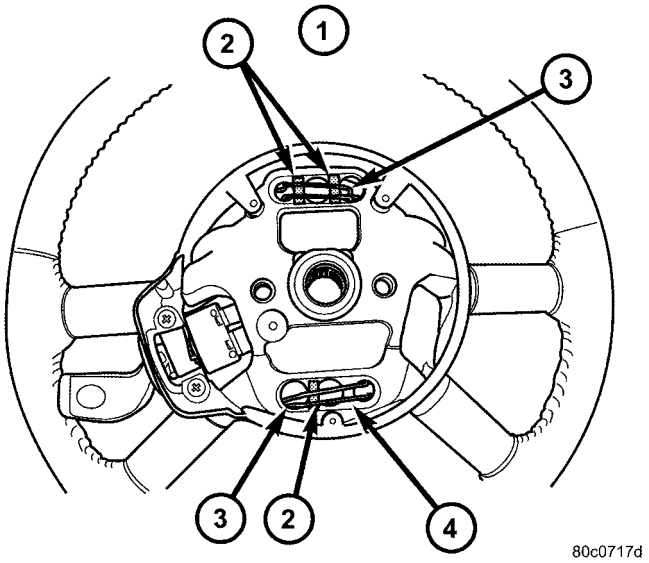

Fig. 40 Foam Rubber Pad Locations

1 - TOP REAR OF STEERING WHEEL
2 - FOAM RUBBER PADS
3 - DRIVER AIRBAG RETAINING CLIP
4 - HORN GROUND AREA- NO PAD HERE

CAUTION: Do not install the steering wheel onto the shaft of the steering column by driving it onto the shaft.

(3) Feed the clockspring wiring leads through the hole in the steering wheel. Align the steering wheel's wide mounting spline with the steering column shaft missing spline area and push the wheel onto the shaft. Make sure the clockspring lines up with the back of the wheel and does not bind.

(4) Install the steering wheel retaining bolt and tighten it until the steering wheel is fully installed on shaft. Tighten the steering wheel retaining bolt to 54 N·m (40 ft. lbs.) torque.

(5) Install the driver airbag. (Refer to 8 - ELECTRICAL/RESTRAINTS/DRIVER AIRBAG - INSTALLATION)

WARNING: DO NOT CONNECT BATTERY NEGATIVE CABLE YET. REFER FIRST TO AIRBAG SYSTEM TEST. (Refer to 8 - ELECTRICAL/RESTRAINTS - DIAGNOSIS AND TESTING)

(6) Reconnect battery using Airbag System Test procedure in Restraints. (Refer to 8 - ELECTRICAL/RESTRAINTS - DIAGNOSIS AND TESTING)

(7) Close hood.

(8) Verify vehicle and system operation.

GEAR

TABLE OF CONTENTS

	page
GEAR	
DESCRIPTION	28
OPERATION	28
REMOVAL	
REMOVAL	29
REMOVAL - RHD	32
INSTALLATION	
INSTALLATION	32
INSTALLATION - RHD	34
POWER STEERING PRESSURE SWITCH	
DESCRIPTION	34
OPERATION	34
REMOVAL	34
INSTALLATION	35
TIE ROD - OUTER	
REMOVAL	35
INSTALLATION	36

GEAR

DESCRIPTION

The power steering gear is the rack-and-pinion type. It is mounted on the front suspension crossmember (Fig. 1). The outer ends of the outer tie rods attach to the steering knuckles.

NOTE: The power steering gear should not be serviced or adjusted. If a malfunction or oil leak occurs with the steering gear, the complete steering gear needs to be replaced.

OPERATION

Turning of the steering wheel is converted into linear (side-to-side) travel through the meshing of the helical pinion teeth with the rack teeth in the steering gear. This travel pushes and pulls the tie rods to change the direction of the vehicle's front wheels.

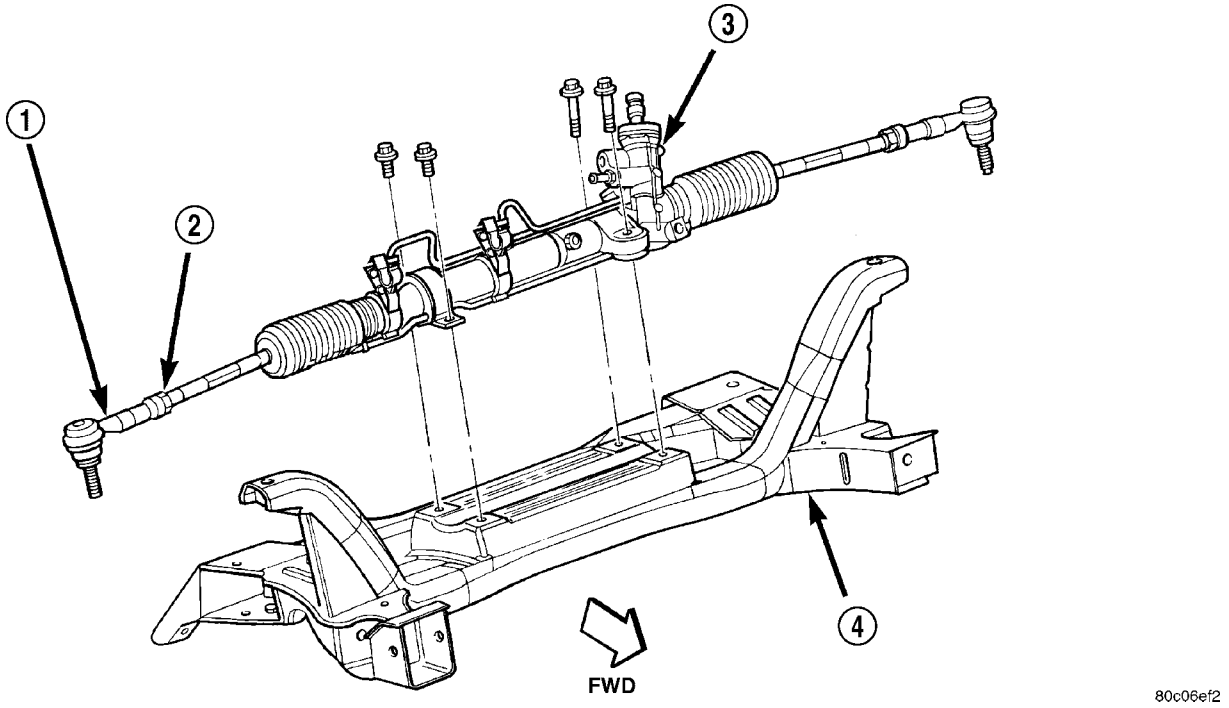

Fig. 1 Power Steering Gear - LHD Shown

1 - OUTER TIE ROD
2 - JAM NUT
3 - STEERING GEAR
4 - FRONT SUSPENSION CROSSMEMBER

GEAR (Continued)

Power assist steering provided by the power steering pump is controlled by an open-center, rotary type control valve which directs fluid from the pump to either side of the integral rack piston upon demand.

Road feel is controlled by the diameter of a torsion bar which initially steers the vehicle. As required steering effort increases, as in a turn, the torsion bar twists, causing relative rotary motion between the rotary valve body and the valve spool. This movement directs oil behind the integral rack piston which, in turn, builds up hydraulic pressure and assists in the turning effort.

Manual steering control of the vehicle can be maintained if power steering assist is lost. However, under this condition, steering effort is significantly increased.

REMOVAL

REMOVAL

NOTE: Before proceeding, (Refer to 19 - STEERING - WARNING).

(1) Place the steering wheel in the STRAIGHT-AHEAD position. Using a steering wheel holder, lock the steering wheel in place to keep it from rotating (Fig. 2). This keeps the clockspring in the proper orientation.

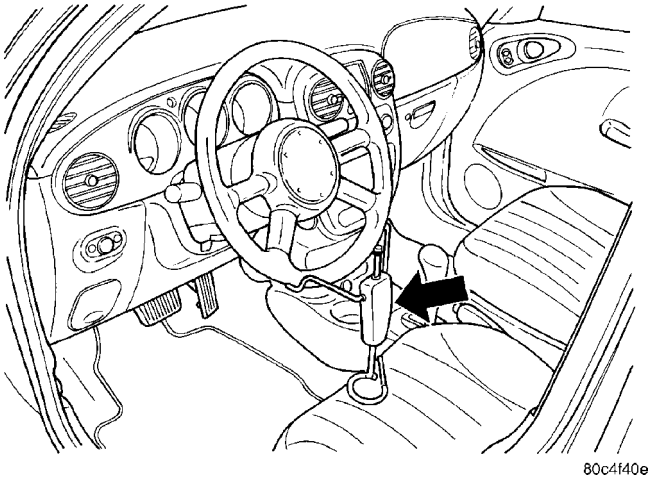

Fig. 2 Steering Wheel Holder

(2) Remove the silencer pad below the knee blocker panel below the steering column.

(3) Fold down and remove the knee blocker.

(4) Remove the steering column coupling retainer pin, back off the pinch bolt nut, and remove the steering column coupling pinch bolt (Fig. 3) (the pinch bolt nut is caged to the coupling and is not removable). Separate the upper and lower steering column couplings.

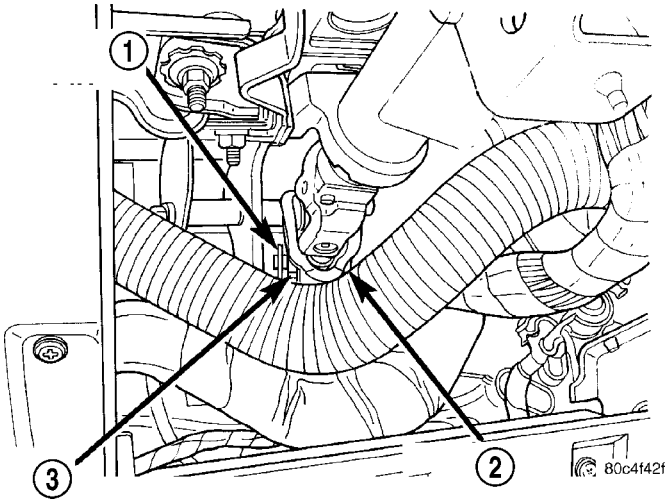

Fig. 3 Steering Column Couplings

1 - RETAINING PIN
2 - PINCH BOLT
3 - NUT

(5) Raise the vehicle. (Refer to LUBRICATION & MAINTENANCE/HOISTING - STANDARD PROCEDURE)

(6) Remove both front tire and wheel assemblies from the vehicle.

(7) Remove nuts attaching both outer tie rods to the steering knuckles (Fig. 4). Remove each nut by holding the tie rod stud stationary while loosening and removing the nut with a crowfoot wrench (or open-end wrench).

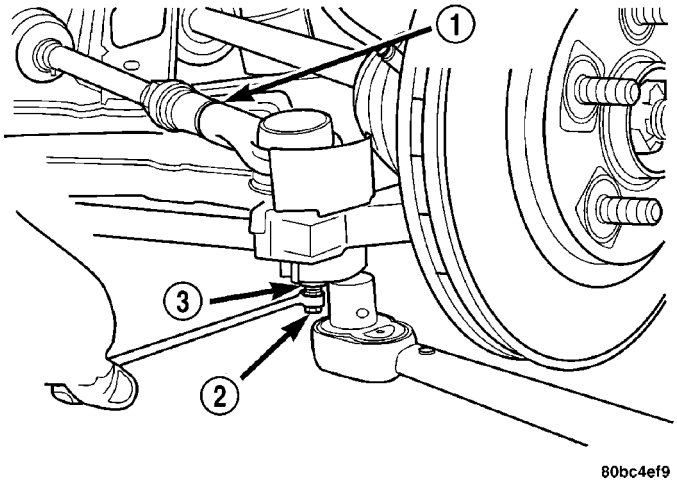

Fig. 4 Tools On Outer Tie Rod Nut

1 - OUTER TIE ROD
2 - STUD
3 - NUT

GEAR (Continued)

(8) Remove the outer tie rods from the steering knuckles using Remover, Special Tool MB991113 (Fig. 5).

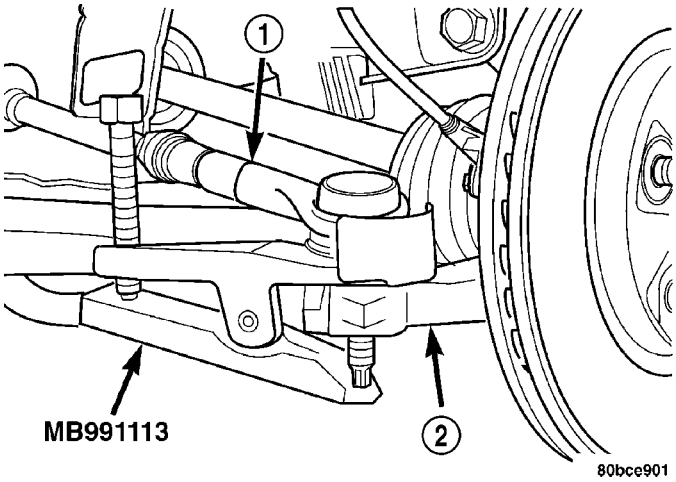

Fig. 5 Tie Rod Removal From Knuckle

1 - OUTER TIE ROD
2 - STEERING KNUCKLE

(9) Remove the tie rod heat shields.

(10) On vehicles equipped with a power steering fluid pressure switch, release the locking tab on the wiring harness connector for the power steering fluid pressure switch, then remove the wiring harness connector from the power steering fluid pressure switch (Fig. 6).

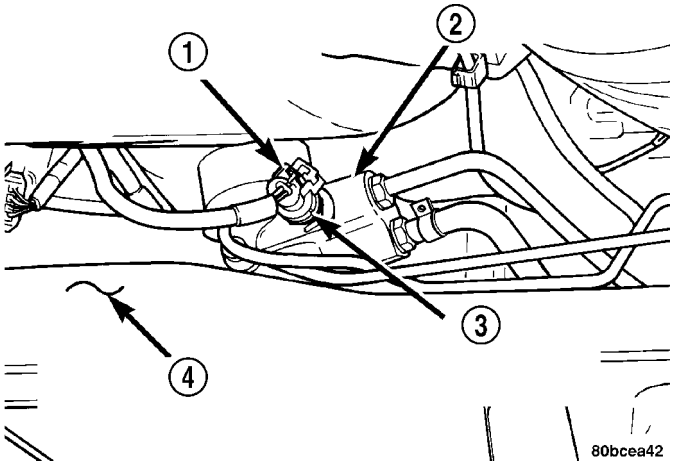

Fig. 6 Power Steering Fluid Pressure Switch

1 - WIRING HARNESS CONNECTOR
2 - POWER STEERING GEAR
3 - POWER STEERING FLUID PRESSURE SWITCH
4 - REAR OF FRONT SUSPENSION CROSSMEMBER

(11) Back out the tube nut securing the power steering fluid pressure hose to the gear (Fig. 7) (Fig. 8).

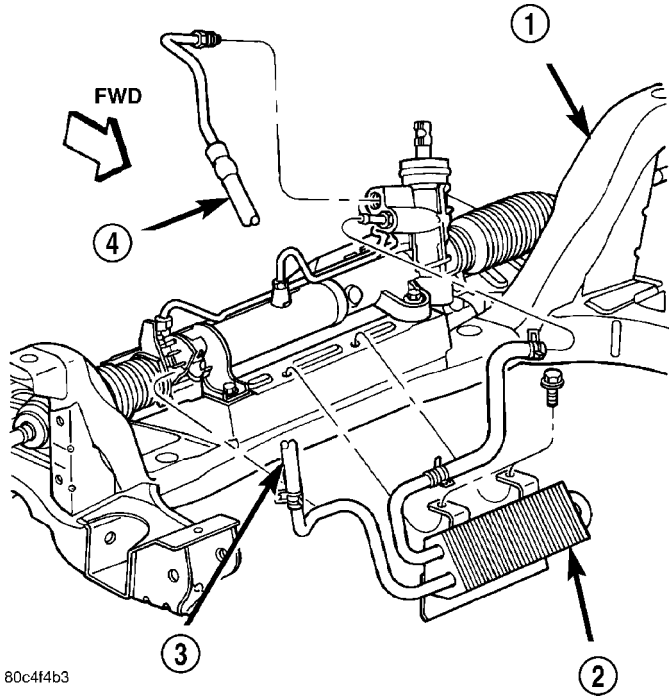

Fig. 7 Cooler And Fluid Hose Mounting

1 - CROSSMEMBER
2 - COOLER
3 - RETURN HOSE
4 - PRESSURE HOSE

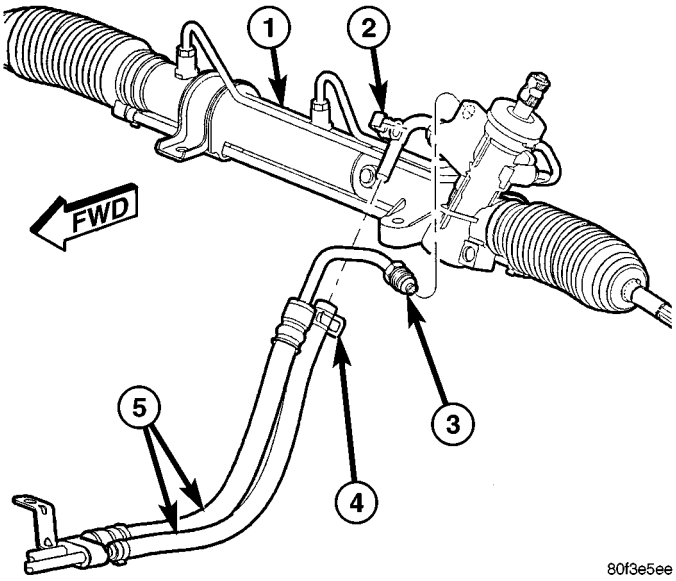

Fig. 8 Hoses At Power Steering Gear - 2.4L Turbo

1 - POWER STEERING GEAR
2 - ROUTING CLIP
3 - PRESSURE HOSE TUBE NUT
4 - RETURN HOSE CLAMP
5 - PRESSURE/RETURN HOSE ASSEMBLY

GEAR (Continued)

(12) Disconnect the cooler or return hose at the power steering gear outlet port fitting (Fig. 7) (Fig. 8).

(13) On vehicles equipped with crossmember mounted power steering fluid coolers:

(a) Remove the cooler tube from the right routing clip.

(b) Remove the two screws securing the cooler to the front suspension crossmember (Fig. 7). Allow the cooler to hang out of the way.

(14) Remove the pencil strut from the right front corner of the crossmember and body of the vehicle. (Fig. 9). Remove the washer behind the strut from the torque strut bolt.

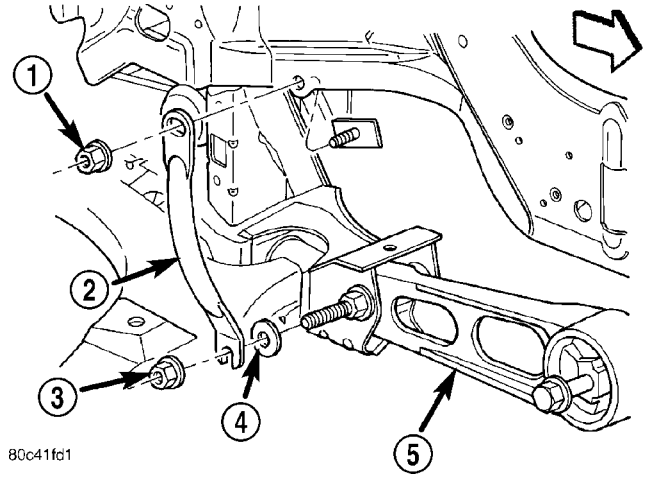

Fig. 9 Strut Mounting

1 - NUT
2 - PENCIL STRUT
3 - NUT
4 - FLAT WASHER
5 - LOWER TORQUE STRUT

(15) Remove the screws fastening the front fascia to the reinforcement as necessary in order to access the drive-belt splash shield forward fastener screw (Fig. 10).

(16) Remove the drive-belt splash shield fasteners (Fig. 10). Remove the shield.

(17) Remove the bolt mounting the engine torque strut to the right forward corner of the front suspension crossmember (Fig. 9).

NOTE: Before removing the front suspension crossmember from the vehicle, the location of the crossmember must be scribed on the body of the vehicle (Fig. 9). Do this so the crossmember can be relocated, upon reinstallation, against the body of vehicle in the same location as before removal. If the front suspension crossmember is not reinstalled in exactly the same location as before removal, the preset front wheel alignment settings (caster and camber) will be lost.

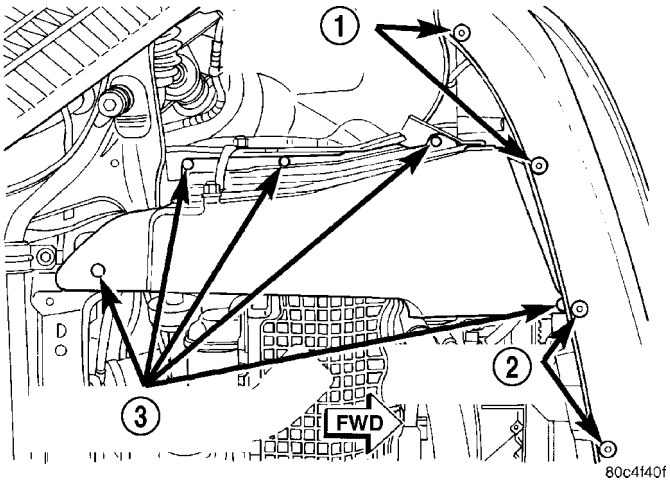

Fig. 10 Fascia And Splash Shield Fasteners

1 - FASCIA FASTENERS
2 - FASCIA FASTENERS
3 - SPLASH SHIELD FASTENERS

(18) Using an awl, scribe a line marking the location of where the front suspension crossmember is mounted against the body of the vehicle (Fig. 11).

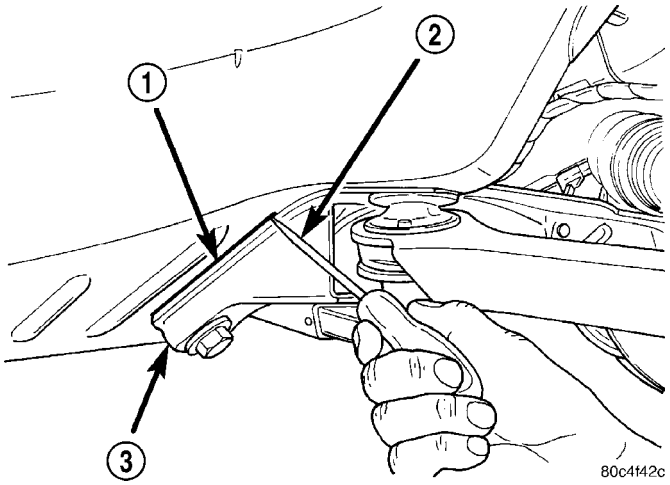

Fig. 11 Marking Crossmember Location

1 - SCRIBED LINE
2 - AWL
3 - CROSSMEMBER

(19) Position a transmission jack under the center of the front suspension crossmember and raise it to support the bottom of the crossmember.

(20) Loosen all six bolts attaching the front suspension crossmember to the frame rails of vehicle. Do not completely remove the two mounting bolts going through the lower control arm rear isolator bushings. They are designed to disengage from the body threads yet stay within the lower control arm rear isolator bushing. Back the two bolts out just enough to disengage the threaded tapping plates in the body of the vehicle. Completely remove the other four bolts.

GEAR (Continued)

(21) Lower the front suspension crossmember using the transmission jack enough to allow the power steering gear to be removed from the rear of the crossmember (Fig. 12). When lowering front suspension crossmember, do not let crossmember hang from lower control arms. The weight should be supported by the transmission jack.

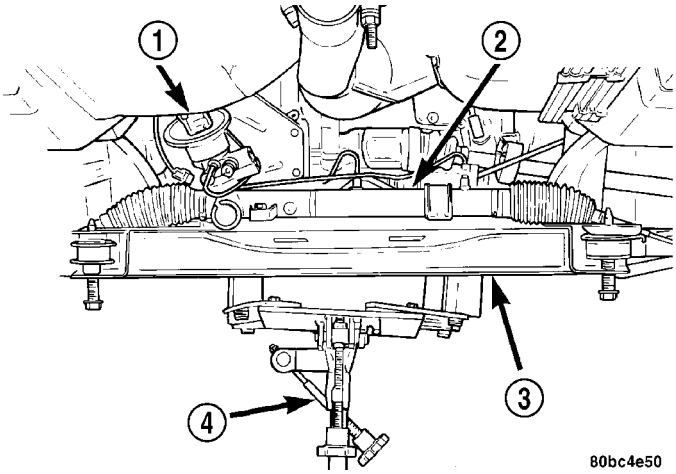

Fig. 12 Crossmember Lowered

1 - STEERING COLUMN LOWER COUPLING
2 - POWER STEERING GEAR
3 - FRONT SUSPENSION CROSSMEMBER
4 - TRANSMISSION JACK

(22) Remove the roll pin securing the steering column lower coupling to the power steering gear pinion shaft using a roll pin punch (Fig. 13). Push the steering column lower coupling up and off of the power steering gear pinion shaft.

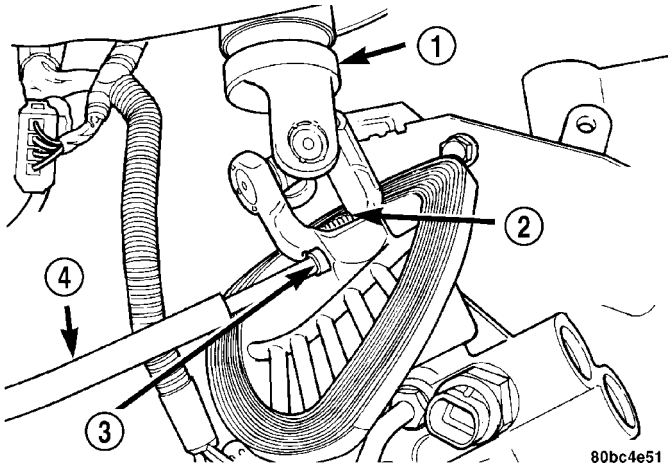

Fig. 13 Coupling Roll Pin

1 - STEERING COLUMN LOWER COUPLING
2 - POWER STEERING GEAR PINION SHAFT
3 - ROLL PIN
4 - ROLL PIN PUNCH

(23) Release the pinion shaft dash cover seal from the tabs cast into the power steering gear housing and remove the seal from the power steering gear (Fig. 14).

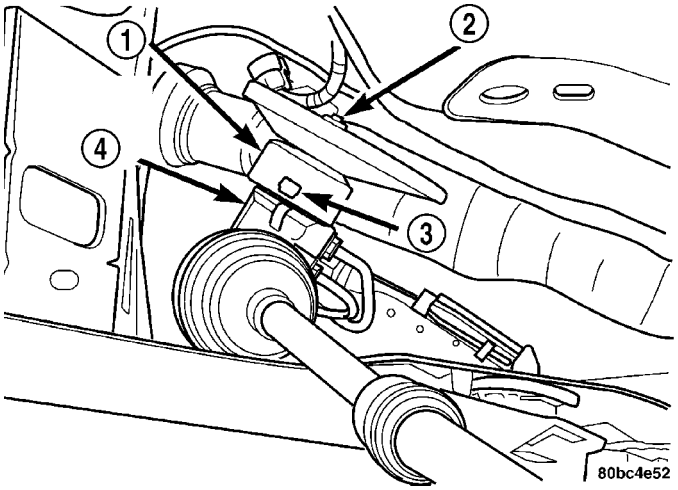

Fig. 14 Pinion Shaft Dash Cover Seal

1 - SEAL
2 - PINION SHAFT
3 - TAB
4 - POWER STEERING GEAR

(24) Loosen and remove the four bolts attaching the power steering gear to the front suspension crossmember (Fig. 1). Remove the power steering gear from the front suspension crossmember.

REMOVAL - RHD

Right-Hand-Drive power steering gear is typical of Left-Hand-Drive. (Refer to 19 - STEERING/GEAR - REMOVAL - LHD)

INSTALLATION

INSTALLATION

(1) Install the steering gear on the front suspension crossmember (Fig. 1). Install the four power steering gear mounting bolts. Tighten the mounting bolts to a torque of 61 N·m (45 ft. lbs.).

(2) Install the pinion shaft dash cover seal over the power steering pinion shaft and onto the power steering gear housing. Align the holes on each side of the seal with the tabs cast into the power steering gear housing (Fig. 14).

(3) With the steering column lower coupling pushed partway up through its hole in the dash panel, match the flat on the inside of the steering column lower coupling to the flat on the power steering gear pinion shaft and slide the coupling onto the top of the pinion shaft. Align the roll pin hole in the coupling with the groove in the pinion shaft and

GEAR (Continued)

install the roll pin through the coupling until it is centered (Fig. 13).

(4) Center the power steering gear rack in its travel.

(5) Using the transmission jack, raise the front suspension crossmember and power steering gear until the crossmember contacts its mounting spot against the body and frame rails of the vehicle. As the crossmember is raised, carefully guide the steering column lower coupling up through its hole in the dash panel.

(6) Start the two crossmember mounting bolts through the lower control arm rear isolator bushings into the tapping plates mounted in the body. Next, install the two front and the two rear mounting bolts attaching front suspension crossmember to frame rails of vehicle. Lightly tighten all six mounting bolts to approximately 2 N·m (20 in. lbs.) to hold the front suspension crossmember in position at this time.

NOTE: When reinstalling the front suspension crossmember back in the vehicle, it is very important that the crossmember be attached to the body in exactly the same spot as when it was removed. Otherwise, the vehicle's wheel alignment settings (caster and camber) will be lost.

(7) Using a soft face hammer, tap the front suspension crossmember back-and-forth or side-to-side until it is aligned with the previously scribed positioning marks on the body of the vehicle (Fig. 11). Once the front suspension crossmember is correctly positioned, tighten the two crossmember mounting bolts through the lower control arm rear isolator bushings to a torque of 250 N·m (185 ft. lbs.), then tighten the four remaining crossmember mounting bolts to a torque of 153 N·m (113 ft. lbs.).

(8) Fasten the engine torque strut to the right forward corner of the front suspension crossmember using its mounting bolt (Fig. 9). Follow the procedure described in the ENGINE section to properly align and tighten the torque strut and it's mounting bolts. (Refer to 9 - ENGINE/ENGINE MOUNTING/ TORQUE STRUT - ADJUSTMENTS)

(9) Install the washer on the end of the stud extending from the torque strut bolt (Fig. 9).

(10) Install the pencil strut to the right front corner of the crossmember and body of the vehicle (Fig. 9). Tighten the pencil strut nuts to a torque of 58 N·m (43 ft. lbs.).

(11) Install the drive-belt splash shield and fasteners (Fig. 10).

(12) Install the screws fastening the front fascia to the reinforcement (Fig. 10).

(13) Using a lint free towel, wipe clean the open power steering hose ends and the power steering gear ports. Replace the pressure hose used O-ring with new. Lubricate the O-ring with power steering fluid.

(14) On vehicles equipped with crossmember mounted power steering fluid coolers:

(a) Place the cooler in mounting position and snap the cooler tube going to the gear into the right routing clip on the front of the gear. Close the routing clip.

(b) Install the two screws securing the cooler to the front suspension crossmember (Fig. 7). Tighten the screws to a torque of 10 N·m (90 in. lbs.).

(15) Slide the cooler or return hose onto the steel gear outlet port fitting (Fig. 7) (Fig. 8). Secure the clamp on the hose past the bead on the steel fitting.

CAUTION: On vehicles equipped with crossmember mounted power steering fluid coolers, forward of the steering gear, the power steering fluid pressure hose routes between the front suspension crossmember and the driveshaft. When tightening the pressure hose tube nut to the steering gear, the pressure hose must be positioned (clocked) such that its final routing (after tightened to 47 N·m (35 ft. lbs.)) offers 4–10 mm clearance to the front suspension crossmember (measured at the pressure hose steel-to-rubber coupling).

(16) Attach the power steering fluid pressure hose to its port on the power steering gear (Fig. 7) (Fig. 8).

(17) On turbocharged engined vehicles, install routing clip up from gear outlet tube onto fluid pressure hose tube (Fig. 8).

(18) While making sure the pressure hose is not in contact with any vehicle components (see preceding caution), tighten the pressure hose tube nut at the gear to 47 N·m (35 ft. lbs.) torque.

(19) On vehicles equipped with a power steering fluid pressure switch, reconnect the wiring harness connector at the power steering fluid pressure switch (Fig. 6). Be sure the locking tab on the wiring harness connector is securely latched.

(20) Perform the following to each outer tie rod:

(a) Place the tie rod heat shield on the knuckle's steering arm, aligning the hole in the shield with the hole in the knuckle and the tangs on the outside of the shield with the outside configuration of the steering arm. The shield should now be facing outboard, away from the power steering gear and tie rod (Fig. 4).

(b) Attach the outer tie rod end to its steering knuckle.

(c) Start the attaching nut onto the stud of the outer tie rod.

(d) While holding the stud of the tie rod stationary with a wrench, tighten the attaching nut (Fig. 4).

GEAR (Continued)

(e) Using a crowfoot wrench attached to a torque wrench, tighten the attaching nut to 55 N·m (40 ft. lbs.).

(21) Install the tire and wheel assemblies back on vehicle. Tighten the wheel mounting nuts to 135 N·m (100 ft. lbs.) torque.

(22) Lower the vehicle to ground level.

(23) Install the dash-to-lower coupling seal in place over the lower coupling's plastic collar.

NOTE: Verify that grease is present on the lip of the dash-to-coupling seal where it contacts the coupling's plastic collar.

(24) Inside the passenger compartment, reconnect the steering column lower coupling to the steering column upper coupling (Fig. 3). Install the coupling pinch bolt and tighten the pinch bolt nut to a torque of 28 N·m (250 in. lbs.). Install the pinch bolt retainer pin.

(25) Remove the steering wheel holder.

(26) While looking under the instrument panel at the lower coupling, rotate the steering wheel back-and-forth to verify that the lower coupling does not squeak against the dash-to-coupling seal.

(27) Install the knee blocker.

(28) Install the silencer pad below the knee blocker panel below the steering column.

(29) Perform the POWER STEERING PUMP INITIAL OPERATION service procedure to properly fill and bleed the power steering system. (Refer to 19 - STEERING/PUMP - STANDARD PROCEDURE)

(30) Check for fluid leaks.

(31) Adjust the front toe setting on the vehicle. (Refer to 2 - SUSPENSION/WHEEL ALIGNMENT - STANDARD PROCEDURE)

INSTALLATION - RHD

Right-Hand-Drive power steering gear is typical of Left-Hand-Drive. (Refer to 19 - STEERING/GEAR - INSTALLATION - LHD)

POWER STEERING PRESSURE SWITCH

DESCRIPTION

A power steering pressure switch is used on some versions of this vehicle to improve the vehicle's idle quality. The pressure switch improves vehicle idle quality by causing a readjustment of the engine idle speed as necessary when increased fluid pressure is sensed in the power steering system.

The pressure switch functions by signaling the powertrain control module that an increase in pressure of the power steering system is putting additional load on the engine. This type of condition exists when the front tires of the vehicle are turned while the vehicle is stationary and the engine is at idle speed. When the powertrain control module receives the signal from the power steering pressure switch, it directs the engine to increase its idle speed. This increase in engine idle speed compensates for the additional load, thus maintaining the required engine idle speed and idle quality.

The power steering pressure switch is mounted directly to the power steering gear (Fig. 15).

OPERATION

The switch provides an input to the PCM during periods of high pump load and low engine RPM; such as during parking maneuvers.

When power steering pump pressure exceeds 2758 kPa (400 psi), the switch is open. The PCM increases idle air flow through the IAC motor to prevent engine stalling. The PCM sends 12 volts through a resister to the sensor circuit to ground. When pump pressure is low, the switch is closed.

REMOVAL

NOTE: Before proceeding, (Refer to 19 - STEERING - WARNING).

(1) Disconnect negative battery cable from the negative post of the battery. Be sure cable is isolated from negative post on battery.

(2) Raise the vehicle. (Refer to LUBRICATION & MAINTENANCE/HOISTING - STANDARD PROCEDURE).

(3) Locate the power steering fluid pressure switch on the back side of the power steering gear (Fig. 15).

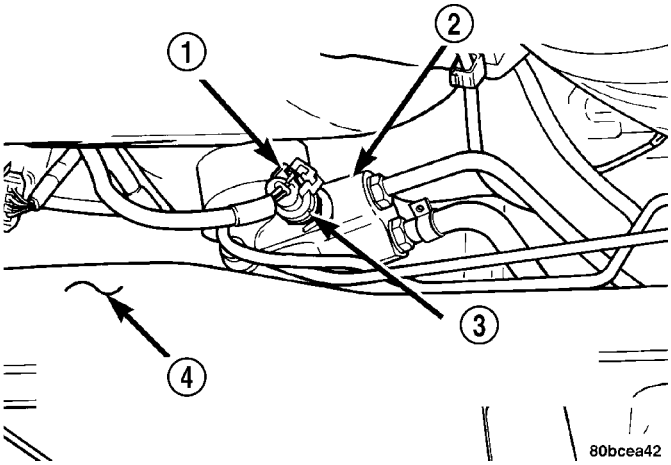

Fig. 15 Switch Location

1 - WIRING HARNESS CONNECTOR
2 - POWER STEERING GEAR
3 - POWER STEERING FLUID PRESSURE SWITCH
4 - REAR OF FRONT SUSPENSION CROSSMEMBER

POWER STEERING PRESSURE SWITCH (Continued)

(4) Remove the vehicle wiring harness connector from the power steering fluid pressure switch.

NOTE: When removing and installing the power steering pressure switch, use a 7/8 inch deep well socket. The deep well socket will prevent damage to the plastic electrical connector area of the power steering fluid pressure switch.

(5) Unscrew and remove the power steering fluid pressure switch from the power steering gear.

INSTALLATION

(1) By hand, screw the power steering pressure switch into the power steering gear until it is fully seated (Fig. 15). Tighten the power steering pressure switch to a maximum torque of 8 N·m (70 in. lbs.). Over-torquing will result in stripping the threads out of the power steering pressure switch port in the steering gear.

(2) Install the vehicle wiring harness connector. Be sure the latch on the wiring harness connector is fully engaged with the locking tab on the power steering pressure switch.

(3) Lower the vehicle.

(4) Fill the power steering fluid reservoir to the correct fluid level. (Refer to 19 - STEERING/PUMP/FLUID - STANDARD PROCEDURE)

(5) Connect the negative cable to the negative post of the battery.

(6) Start the engine and turn the steering wheel several times stop-to-stop to bleed any air from the fluid in the power steering system. Stop the engine, check the fluid level, and inspect the system for leaks.

TIE ROD - OUTER

REMOVAL

(1) Raise the vehicle. (Refer to LUBRICATION & MAINTENANCE/HOISTING - STANDARD PROCEDURE)

(2) Remove the tire and wheel assembly from the vehicle. (Refer to 22 - TIRES/WHEELS - REMOVAL)

(3) Loosen tie rod jam nut (Fig. 16). Thread the jam nut far enough up the inner tie rod to pull the collar away from the outer tie rod end. Pull the collar off the end of the outer tie rod.

(4) Remove the nut attaching the outer tie rod end to steering knuckle (Fig. 17). Remove the nut by holding the tie rod stud stationary while loosening and removing the nut with a wrench.

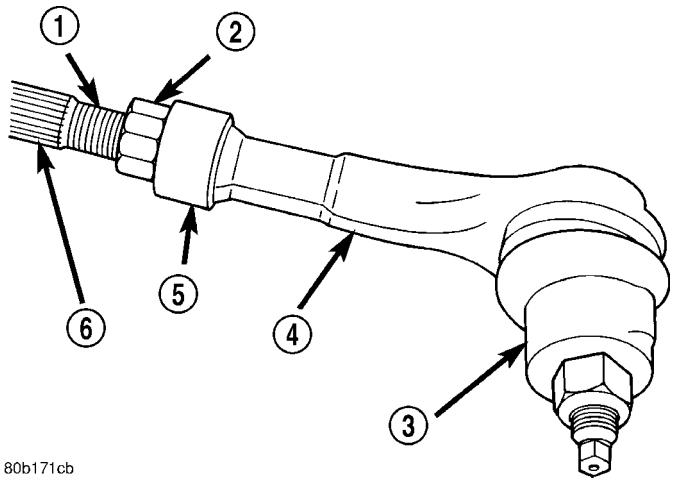

Fig. 16 Outer Tie Rod

1 - INNER TIE ROD
2 - OUTER TIE ROD JAM NUT
3 - STEERING KNUCKLE
4 - OUTER TIE ROD END
5 - COLLAR
6 - INNER TIE ROD SERRATION

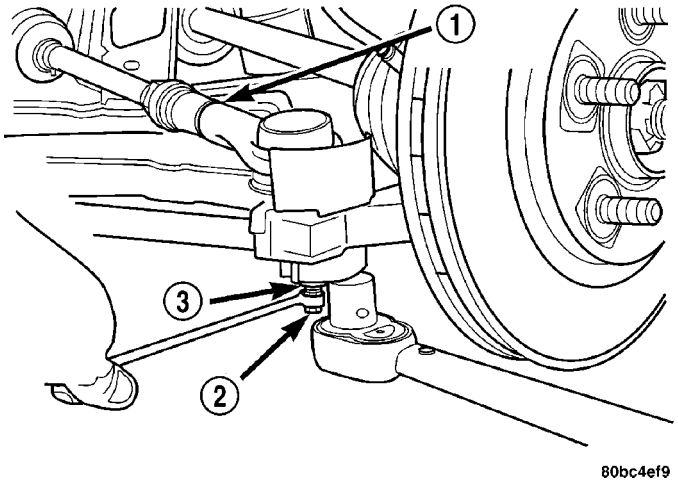

Fig. 17 Tools On Outer Tie Rod Nut

1 - OUTER TIE ROD
2 - STUD
3 - NUT

(5) Remove the outer tie rod from the steering knuckle using Remover, Special Tool MB991113 (Fig. 18).

(6) Remove the tie rod heat shield.

(7) Remove the outer tie rod from the inner tie rod by unthreading it.

TIE ROD - OUTER (Continued)

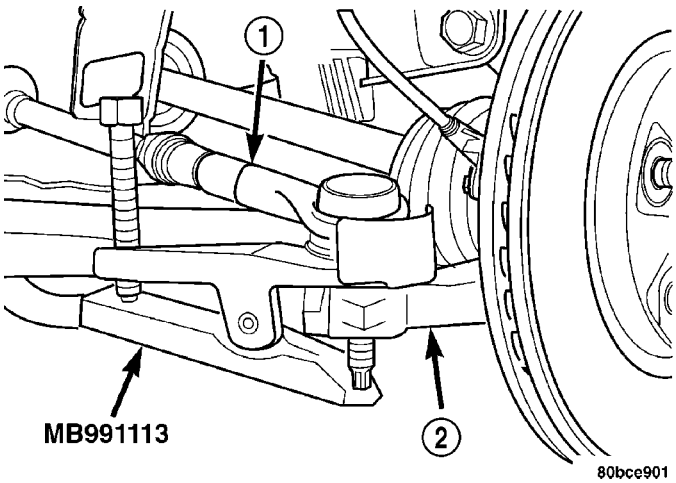

Fig. 18 Tie Rod Removal From Knuckle

1 - OUTER TIE ROD
2 - STEERING KNUCKLE

INSTALLATION

(1) Install the jam nut on the inner tie rod threads if it is not already installed (Fig. 16).

NOTE: Be sure the collar is installed on the inner tie rod with the flat end of the collar against jam nut and the open end of the collar facing the outer tie rod end.

(2) Install the collar on the inner tie rod (Fig. 16).

(3) Thread the outer tie rod onto the inner tie rod.

(4) Position the collar around the end of the outer tie rod (Fig. 16).

(5) Thread the jam nut down the inner tie rod far enough to hold the collar in place on the outer tie rod. Do not tighten the jam nut.

(6) Place the tie rod heat shield on the knuckle's steering arm, aligning the hole in the shield with the hole in the knuckle and the tangs on the outside of the shield with the outside configuration of the steering arm. The shield should now be facing outboard, away from the power steering gear and tie rod (Fig. 17).

(7) Attach the outer tie rod end to the steering knuckle.

(8) Start the attaching nut onto the stud of the outer tie rod.

(9) While holding the stud of the tie rod stationary with a wrench, tighten the attaching nut (Fig. 17).

(10) Using a crowfoot wrench attached to a torque wrench, tighten the attaching nut to 75 N·m (55 ft. lbs.).

(11) Install the tire and wheel assembly(Refer to 22 - TIRES/WHEELS - INSTALLATION). Tighten wheel nut to a torque of 135 N·m (100 ft. lbs.).

(12) Lower the vehicle.

(13) Adjust the front toe setting on the vehicle. (Refer to 2 - SUSPENSION/WHEEL ALIGNMENT - STANDARD PROCEDURE).

PUMP

TABLE OF CONTENTS

page

PUMP
DESCRIPTION
DESCRIPTION - 1.6L ENGINE 37
DESCRIPTION - 2.0L/2.4L/2.4L TURBO ENGINE 38
DESCRIPTION - 2.2L DIESEL 38
STANDARD PROCEDURE - POWER STEERING PUMP INITIAL OPERATION 38
REMOVAL
REMOVAL - 1.6L ENGINE 39
REMOVAL - 2.0L/2.4L ENGINE 39
REMOVAL - 2.4L TURBO 42
REMOVAL - 2.2L DIESEL 44
DISASSEMBLY 44
ASSEMBLY 44
INSTALLATION
INSTALLATION - 1.6L ENGINE 45
INSTALLATION - 2.0L/2.4L ENGINE 45
INSTALLATION - 2.4L TURBO 45
INSTALLATION - 2.2L DIESEL 46
FLUID
STANDARD PROCEDURE - POWER STEERING FLUID LEVEL CHECKING 46
FLUID COOLER
DESCRIPTION 47
REMOVAL - NON-TURBO ENGINES 47
INSTALLATION - NON-TURBO ENGINES 47
HOSE - POWER STEERING PRESSURE
REMOVAL
REMOVAL - 2.0L ENGINE 48
REMOVAL - 2.4L ENGINE 49
REMOVAL - 2.2L DIESEL 50
INSTALLATION
INSTALLATION - 2.0L ENGINE 51
INSTALLATION - 2.4L ENGINE 52
INSTALLATION - 2.2L DIESEL 53
HOSE - POWER STEERING PRESSURE/ RETURN
REMOVAL - 2.4L TURBO 53
INSTALLATION - 2.4L TURBO 56
HOSE - POWER STEERING RETURN
REMOVAL
REMOVAL - 2.0L/2.4L ENGINE 57
REMOVAL - 2.4L TURBO 58
REMOVAL - 2.2L DIESEL 58
INSTALLATION
INSTALLATION - 2.0L/2.4L ENGINE 58
INSTALLATION - 2.4L TURBO 59
INSTALLATION - 2.2L DIESEL 59
HOSE - POWER STEERING SUPPLY
REMOVAL
REMOVAL - 2.0L/2.4L ENGINE 59
REMOVAL - 2.2L DIESEL 60
INSTALLATION
INSTALLATION - 2.0L/2.4L ENGINE 61
INSTALLATION - 2.2L DIESEL 61
PULLEY
REMOVAL - 2.2L DIESEL 62
INSTALLATION - 2.2L DIESEL 62
RESERVOIR
DESCRIPTION 62
REMOVAL
REMOVAL - 1.6L ENGINE 62
REMOVAL - 2.0L/2.4L ENGINE 63
REMOVAL - 2.2L DIESEL 63
INSTALLATION
INSTALLATION - 1.6L ENGINE 64
INSTALLATION - 2.0L/2.4L ENGINE 64
INSTALLATION - 2.2L DIESEL 65

PUMP

DESCRIPTION

DESCRIPTION - 1.6L ENGINE

Hydraulic pressure for operation of the power steering gear is provided by a constant flow rate and displacement vane-type power steering pump. The pump is located on the front corner of the engine. It is attached to the engine water (coolant) pump to form an assembly (Fig. 1).

The power steering pump is belt driven. Its pulley driven shaft traverses the length of the pump, exiting the rear, driving the engine water pump that is attached to the rear of the pump.

Both pumps can be serviced separately. The entire power steering pump/water pump assembly must be removed as an assembly, then disassembled to service either pump. No repair procedures are to be done on the internal components of the power steering pump itself. The pulley may be serviced separately.

PUMP (Continued)

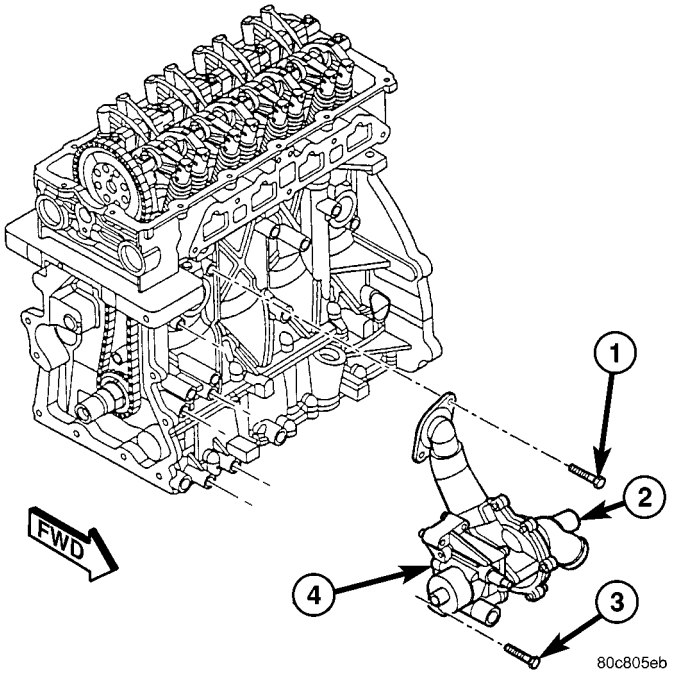

Fig. 1 Power Steering Pump/Water Pump Assembly - 1.6L Engine

1 - OUTLET HOSE CONNECTOR FITTING BOLT (2)
2 - WATER PUMP
3 - POWER STEERING PUMP MOUNTING BOLT (4)
4 - POWER STEERING PUMP

DESCRIPTION - 2.0L/2.4L/2.4L TURBO ENGINE

The hydraulic pressure for operation of the power steering gear is provided by a belt-driven power steering pump (Fig. 2) (Fig. 3). The power steering pump is a constant flow rate and displacement vane-type pump.

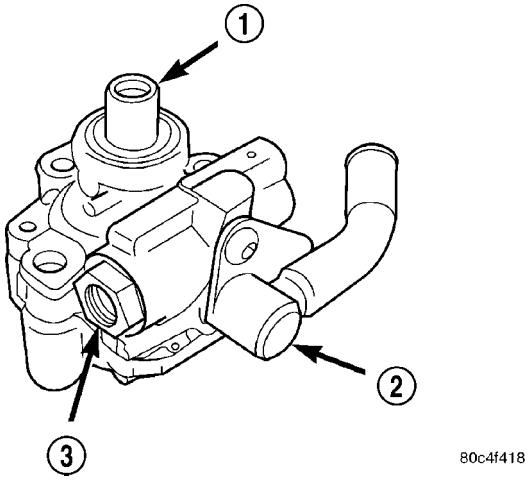

Fig. 2 Power Steering Pump - 2.4L Engine

1 - SHAFT
2 - SUPPLY FITTING
3 - PRESSURE FITTING

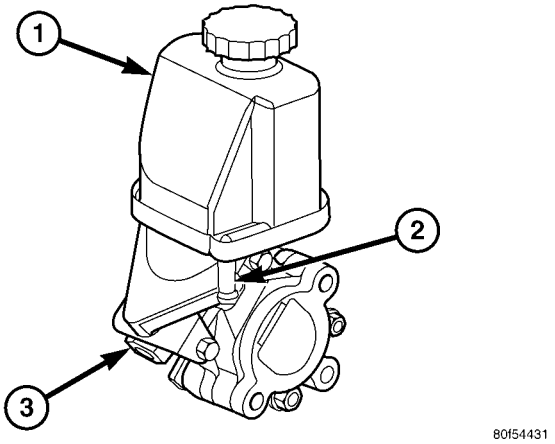

Fig. 3 Power Steering Pump - 2.4L Turbo

1 - RESERVOIR
2 - RETURN FITTING
3 - PRESSURE FITTING

The power steering pump for non-turbocharged engines consists of the power steering pump and the power steering pump pulley. The power steering fluid reservoir is remotely located on this vehicle.

The power steering pump for turbocharged engines consists of the power steering pump, the reservoir mounted to the top, and the power steering pump pulley.

No repair procedures are to be done on the internal components of the power steering pump. On turbocharged engine applications, the reservoir is serviced with the pump.

DESCRIPTION - 2.2L DIESEL

Hydraulic pressure for operation of the power steering gear is provided by a constant flow rate and displacement vane-type power steering pump. The pump is located on the front corner of the engine. It is attached to the engine water (coolant) pump to form an assembly.

The power steering pump is belt driven. Its pulley driven shaft traverses the length of the pump, exiting the rear, driving the engine water pump that is attached to the rear of the pump.

The power steering pump and water pump are serviced as one assembly. The pulley may be serviced separately.

STANDARD PROCEDURE - POWER STEERING PUMP INITIAL OPERATION

WARNING: THE FLUID LEVEL SHOULD BE CHECKED AND ADJUSTED WITH THE ENGINE OFF TO PREVENT INJURY FROM MOVING ENGINE COMPONENTS.

PUMP (Continued)

CAUTION: Use only Mopar® ATF+4 Automatic Transmission Fluid (MS-9602) in the power steering system. Do not overfill.

(1) Fill the power steering fluid reservoir to the proper level, then let the fluid settle for at least two minutes. (Refer to 19 - STEERING/PUMP/FLUID - STANDARD PROCEDURE - POWER STEERING FLUID LEVEL CHECKING)

(2) Start the engine and let run for a few seconds, then turn the engine off.

(3) Add fluid if necessary. Repeat the above procedure until the fluid level remains constant after running the engine.

(4) Raise the front wheels off the ground.

(5) Start the engine. Slowly turn the steering wheel right and left, lightly contacting the wheel stops.

(6) Add power steering fluid if necessary.

(7) Lower the vehicle and turn the steering wheel slowly from lock to lock.

(8) Stop the engine. Check the fluid level and refill as required.

(9) If the fluid is extremely foamy, allow the vehicle to stand a few minutes and repeat the above procedure.

REMOVAL

REMOVAL - 1.6L ENGINE

The power steering pump is attached to the water pump as an assembly on the engine. To remove the power steering pump, (Refer to 7 - COOLING/ENGINE/WATER PUMP - REMOVAL).

REMOVAL - 2.0L/2.4L ENGINE

NOTE: Before proceeding, (Refer to 19 - STEERING - WARNING).

(1) Siphon as much fluid as possible from the power steering fluid reservoir.

(2) Raise the vehicle. (Refer to LUBRICATION & MAINTENANCE/HOISTING - STANDARD PROCEDURE)

(3) Remove the right front tire and wheel assembly.

(4) Remove the screws fastening the front fascia to the reinforcement as necessary in order to access the drive-belt splash shield forward fastener screw (Fig. 4).

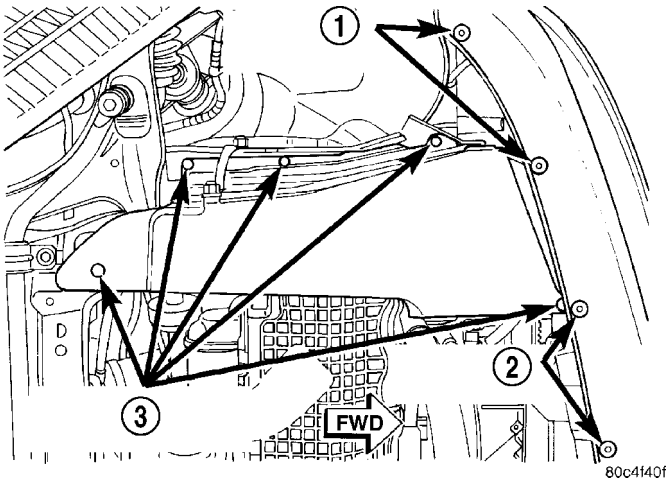

Fig. 4 Fascia And Splash Shield Fasteners

1 - FASCIA FASTENERS
2 - FASCIA FASTENERS
3 - SPLASH SHIELD FASTENERS

(5) Remove the drive-belt splash shield fasteners (Fig. 4). Remove the shield.

(6) Remove the accessory drive-belt from the A/C compressor and power steering pump. Refer to the Cooling section for the procedure.

(7) Remove the electrical connectors from the A/C compressor (Fig. 5).

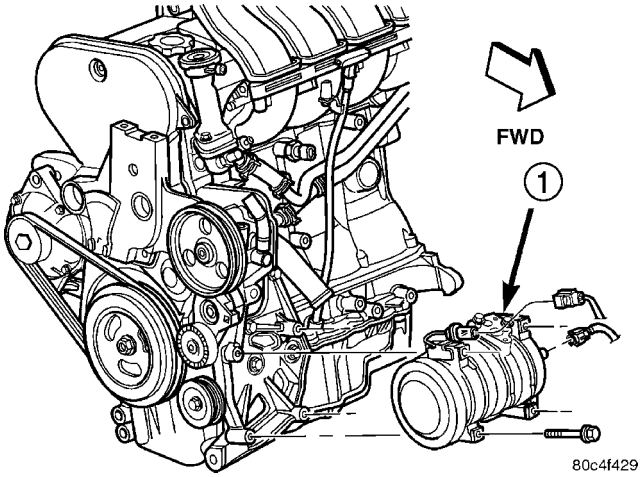

Fig. 5 A/C Compressor Mounting

1 - COMPRESSOR

(8) Remove the four bolts fastening the A/C compressor to the engine (Fig. 5), then move the compressor toward the center of the vehicle, allowing the compressor to settle in place.

PUMP (Continued)

(9) Remove the pressure hose from the pump in the following fashion (Fig. 6) (Fig. 7):

(a) Place a crowfoot wrench on a long extension onto the pressure hose tube nut at the pump.

(b) Place a shop towel between the crowfoot and the pump pulley to avoid slipping and possibly damaging the pulley.

(c) Unthread the tube nut from the pump.

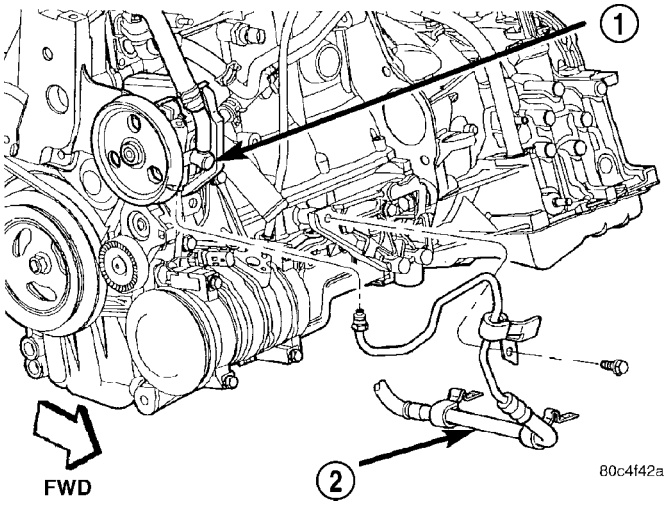

Fig. 6 Pressure Hose Connection To Pump

1 - PUMP
2 - PRESSURE HOSE

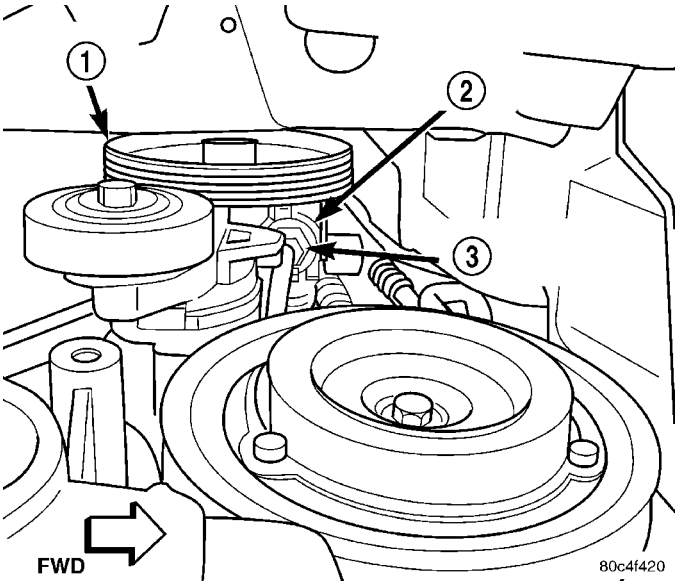

Fig. 7 Pressure Hose Tube Nut

1 - PUMP PULLEY
2 - POWER STEERING PUMP
3 - PRESSURE HOSE TUBE NUT

(10) Lower the vehicle.

(11) Remove the grille from the front of the vehicle (Fig. 8).

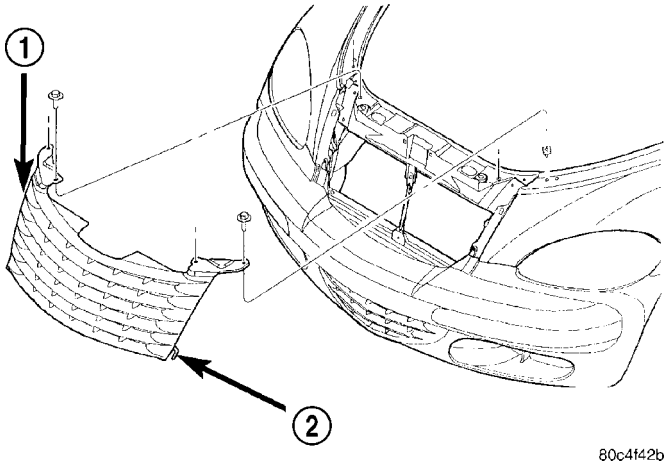

Fig. 8 Grille Attachment

1 - GRILLE
2 - RETAINER

(12) Remove the hood-opening weather-strip from across the radiator closure panel.

(13) Remove the ambient temperature sensor from the radiator closure panel (Fig. 9).

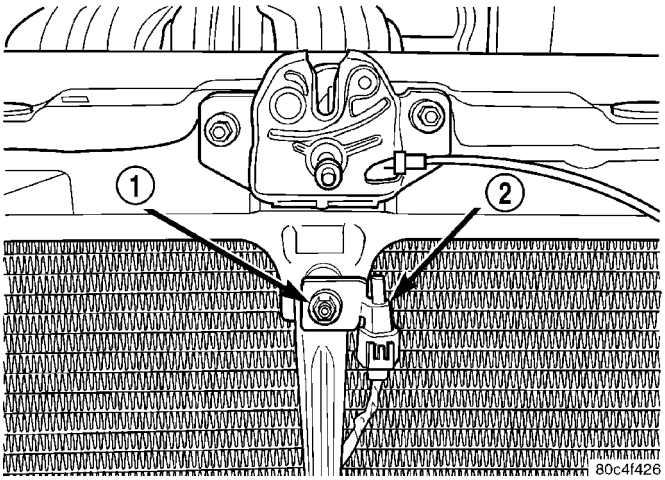

Fig. 9 Ambient Temperature Sensor

1 - FASTENER
2 - SENSOR

(14) Remove the fasteners securing the upper radiator closure panel in place (Fig. 10), then remove the panel.

(15) Lift the cooling module out of its lower mounts and carefully move it toward the left side of the vehicle. It will move only a limited amount with the hoses still connected. Do not force it.

NOTE: For additional room, the right side bolts securing the lower radiator closure panel in front of the cooling module can be removed.

PUMP (Continued)

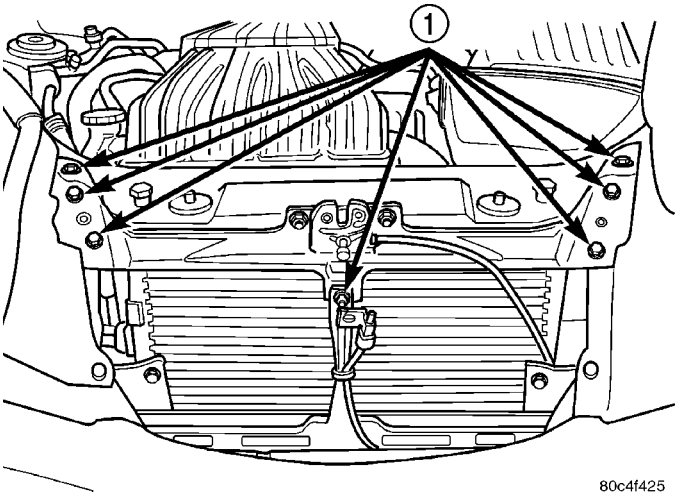

Fig. 10 Radiator Closure Panel

1 - FASTENERS

(16) Using a bungee cord, tie the cooling module forward as shown (Fig. 11). Be sure to attach the cord in a location that will not damage the vehicle. Do not overtighten the bungee cord. It just needs to hold the module forward.

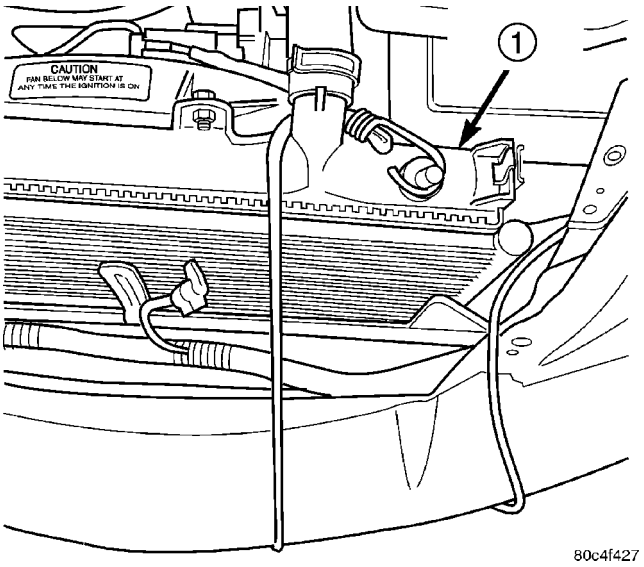

Fig. 11 Cooling Module Tied Forward

1 - COOLING MODULE

(17) Remove the clamp securing the supply hose to the power steering pump supply fitting (Fig. 12), then remove the hose from the supply fitting.

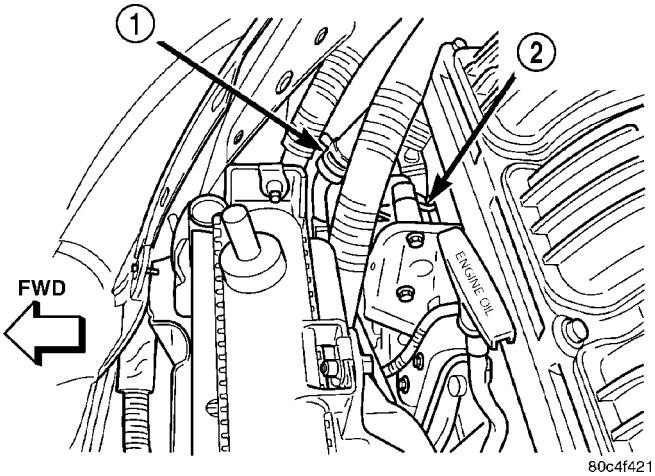

Fig. 12 Supply Hose At Pump

1 - SUPPLY HOSE CLAMP
2 - POWER STEERING PUMP

(18) Remove the three bolts securing the pump in place (Fig. 13).

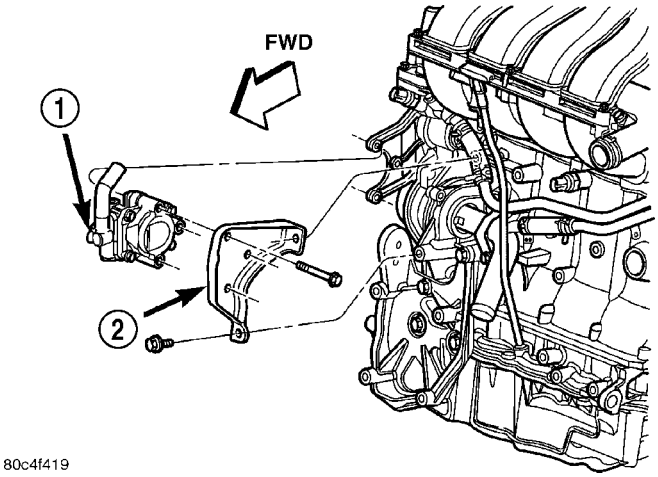

Fig. 13 Mounting Bolts

1 - POWER STEERING PUMP
2 - SUPPORT

(19) Remove the 2 bolts securing the stamped steel support bracket to the engine block (Fig. 13). Remove the bracket.

(20) Ease the cooling module forward, don't force it, and remove the power steering pump and pulley where shown (Fig. 14).

PUMP (Continued)

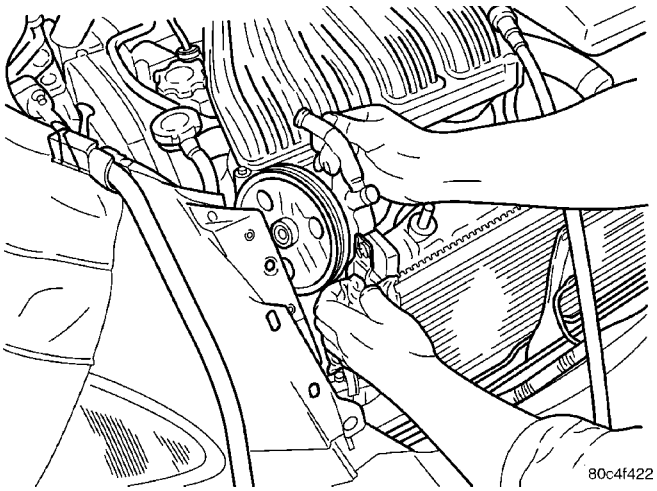

Fig. 14 Power Steering Pump Removal

REMOVAL - 2.4L TURBO

NOTE: Before proceeding, (Refer to 19 - STEERING - WARNING).

(1) Siphon as much fluid as possible from power steering fluid reservoir.

(2) Raise vehicle. (Refer to LUBRICATION & MAINTENANCE/HOISTING - STANDARD PROCEDURE)

(3) Drain engine coolant (Refer to 7 - COOLING/ ENGINE - STANDARD PROCEDURE - DRAIN COOLING SYSTEM).

(4) Remove right front tire and wheel assembly.

(5) Disconnect radiator fan wiring connector (Fig. 15).

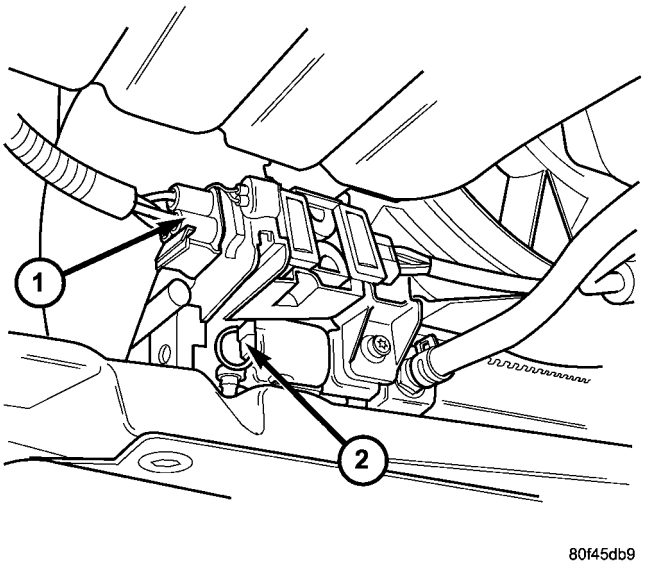

Fig. 15 Radiator Fan Connector - 2.4L Turbo

1 - RADIATOR FAN CONNECTOR
2 - RADIATOR DRAINCOCK

(6) Remove two lower fan mounting screws (Fig. 16).

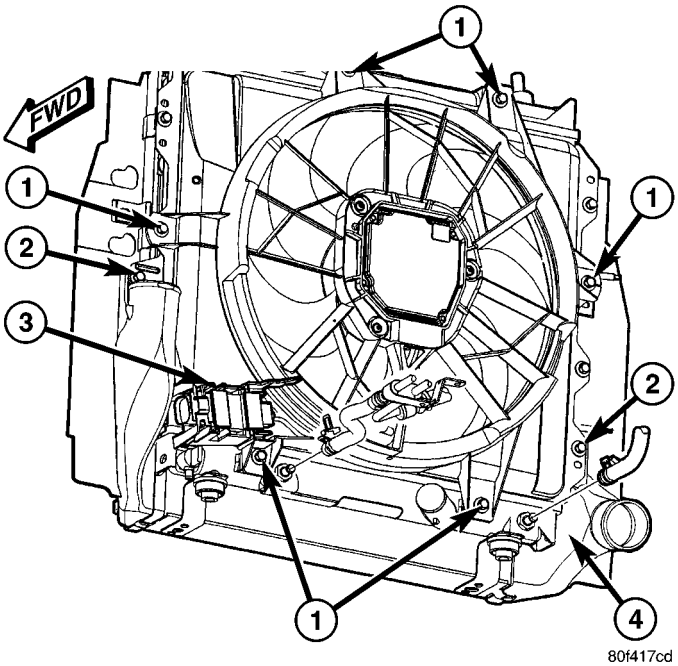

Fig. 16 Fan Mounting To Cooling Module - 2.4L Turbo

1 - RADIATOR FAN FASTENERS
2 - CHARGE AIR COOLER FASTENERS
3 - RADIATOR FAN CONNECTOR
4 - CHARGE AIR COOLER

(7) Remove accessory drive belt splash shield.

(8) Remove accessory drive belt. (Refer to 7 - COOLING/ACCESSORY DRIVE/DRIVE BELT - REMOVAL)

(9) Lower vehicle.

(10) Remove grille from front of vehicle (Fig. 8).

(11) Remove hood-opening weather-strip from across radiator closure panel.

(12) Remove ambient temperature sensors from radiator closure panel (Fig. 17).

(13) Remove fasteners securing upper radiator closure panel in place (Fig. 10), then remove the panel and lay it out of way.

(14) Remove 2 screws fastening upper radiator hose inlet neck to radiator, then separate inlet neck from radiator (Fig. 18).

(15) Lift cooling module out of its lower mounts and carefully tip top toward front of vehicle. DO NOT FORCE IT.

(16) Remove remaining four screws fastening radiator fan to cooling module (Fig. 16). Remove fan.

(17) Remove clamp securing fluid return hose to pump reservoir (Fig. 19), then remove hose from reservoir fitting. Cap off hose end and reservoir fitting.

PUMP (Continued)

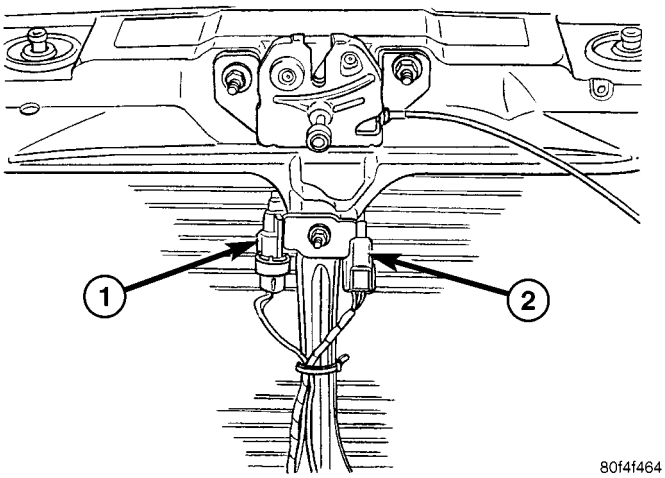

Fig. 17 Temperature Sensor Mounting

1 - AMBIENT TEMP SENSOR
2 - AMBIENT TEMP SENSOR

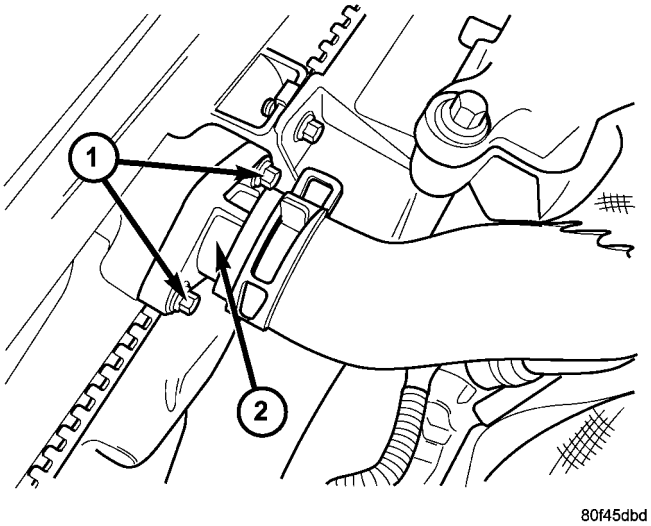

Fig. 18 Radiator Inlet Neck - 2.4L Turbo

1 - FASTENERS
2 - RADIATOR INLET NECK

(18) Back out tube nut securing fluid pressure hose to power steering pump and remove hose from pump (Fig. 19). Cap off hose end and pump pressure port.

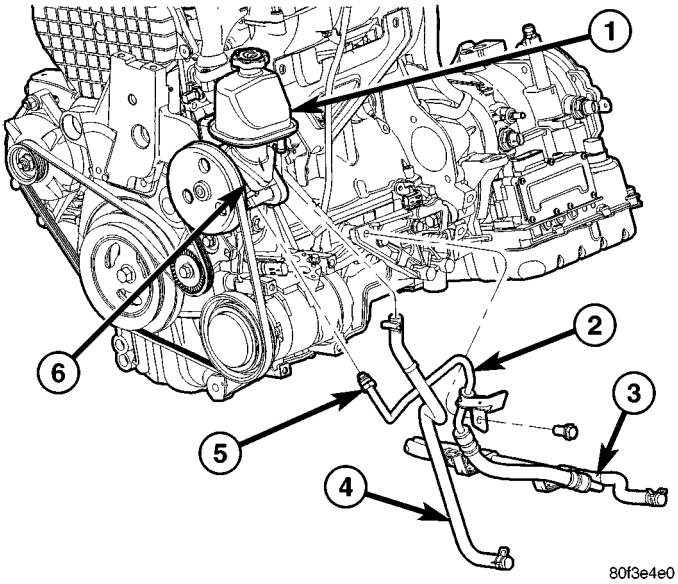

Fig. 19 Hoses At Pump And Engine - 2.4L Turbo

1 - RESERVOIR (MOUNTED TO PUMP)
2 - PRESSURE HOSE (SERVICED WITH RETURN HOSE)
3 - RETURN HOSE (SERVICED WITH PRESSURE HOSE)
4 - RETURN HOSE (COOLING MODULE TO RESERVOIR)
5 - TUBE NUT
6 - POWER STEERING PUMP

(19) Remove three mounting bolts securing power steering pump in place (Fig. 20).

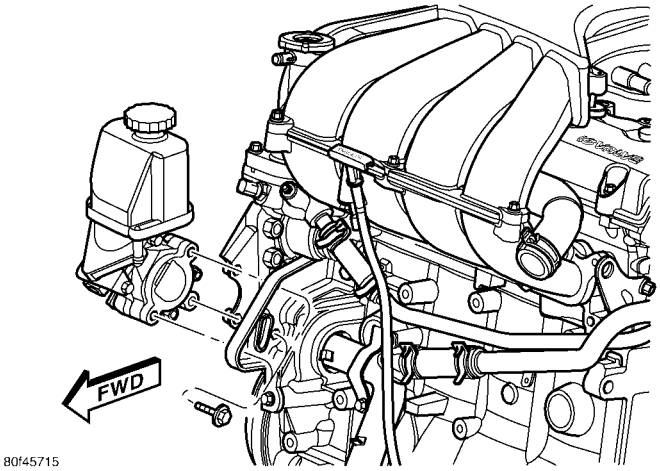

Fig. 20 Pump Mounting - 2.4L Turbo

PUMP (Continued)

(20) Remove 2 bolts securing stamped steel support bracket to engine block (Fig. 21). Remove bracket.

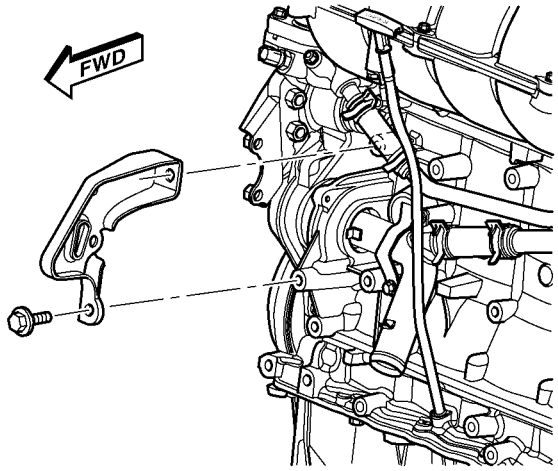

Fig. 21 Bracket Mounting To Engine - 2.4L Turbo

(21) Remove power steering pump with pulley and reservoir attached.

REMOVAL - 2.2L DIESEL

The power steering pump is attached to the water pump as an assembly on the engine. To remove the power steering pump, (Refer to 7 - COOLING/ENGINE/WATER PUMP - REMOVAL).

DISASSEMBLY

NOTE: The only serviceable part of the power steering pump is the pulley. The following procedure is for the removal and installation of the pulley from the pump.

NOTE: The power steering pump must be removed from the vehicle for power steering pump pulley service. (Refer to 19 - STEERING/PUMP - REMOVAL)

CAUTION: Use care when removing and installing the power steering pump pulley. It is made of plastic composite, except for the center shank. Use the special tools in the shank area only as described in the following procedure.

CAUTION: Do not hammer on the power steering pump pulley or shaft to remove the power steering pump pulley. This will damage the pulley and the power steering pump.

(1) Install Puller, Special Tool C-4333, or an equivalent, on the steering pump pulley as shown (Fig. 22). Tighten the puller screw drive and remove the pulley from the power steering pump shaft.

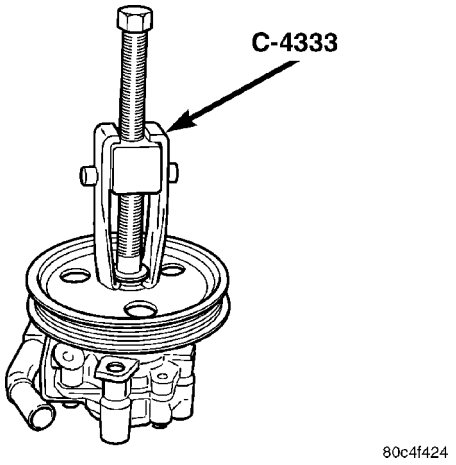

Fig. 22 Pulley Removal

(2) Remove the puller from the pulley.

ASSEMBLY

CAUTION: Use care when removing and installing the power steering pump pulley. It is made of plastic composite, except for the center shank. Use the special tools in the shank area only as described in the following procedure.

NOTE: Replace the power steering pump pulley if it is cracked or loose.

(1) Place the power steering pump pulley squarely on end of the power steering pump shaft. Mount Installer, Special Tool C-4063, or an equivalent, in the internal threads of the power steering pump shaft and against power steering pump pulley (Fig. 23).

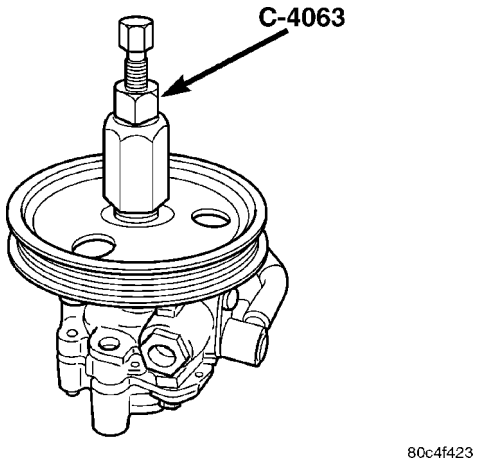

Fig. 23 Pulley Installation

PUMP (Continued)

(2) Ensuring that the installer and the pulley remain aligned with the pump shaft, turn the installer outer nut and force the pulley onto the power steering pump shaft until it is flush with the end of the pump shaft. Once the pulley is flush with the end of the shaft, the installer outer nut will no longer be able to turn.

(3) Remove the installer from the power steering pump.

(4) Install the power steering pump back on the engine. (Refer to 19 - STEERING/PUMP - INSTALLATION)

INSTALLATION

INSTALLATION - 1.6L ENGINE

The power steering pump is attached to the water pump as an assembly on the engine. To install the power steering pump, (Refer to 7 - COOLING/ENGINE/WATER PUMP - INSTALLATION).

INSTALLATION - 2.0L/2.4L ENGINE

(1) Using a lint free towel, wipe clean the open power steering pressure hose end and the power steering pump port. Replace any used O-rings with new. Lubricate the O-ring with clean power steering fluid.

(2) Ease the cooling module forward, don't force it, and install the power steering pump and pulley into its mounting area in the same fashion it was removed (Fig. 14).

(3) Place the pump in mounting position with the stamped steel support bracket behind it (Fig. 13). Install the three bolts through the bracket and pump, into the threaded engine cover. Do not tighten the bolts at this time.

(4) Install the two bolts fastening the bracket to the engine block (Fig. 13). Tighten the two bolts to a torque of 54 N·m (40 ft. lbs.).

(5) Tighten the three pump mounting bolts previously installed to a torque of 28 N·m (250 in. lbs.).

(6) Push the fluid supply hose onto the pump supply fitting. Expand the hose clamp and slide it over the hose and pump supply fitting (Fig. 12). Secure the clamp once it is past the bead formed into the fluid reservoir fitting.

CAUTION: Make sure the supply hose is routed above the engine timing chain cover. The power steering fluid supply hose must remain clear of any unfriendly surface that can cause possible damage to it.

(7) Raise the vehicle.

(8) Thread the fluid pressure hose tube nut into the pump (Fig. 6) (Fig. 7).

(9) Using a crowfoot wrench on a long extension with a torque wrench, tighten the pressure hose tube nut at the power steering pump to a torque of 68 N·m (50 ft. lbs.).

(10) Install the four bolts fastening the A/C compressor to the engine (Fig. 5). Tighten the mounting bolts to a torque of 28 N·m (250 in. lbs.).

(11) Install the A/C compressor electrical connectors (Fig. 5).

(12) Install the A/C drive belt. Refer to the Cooling section for the procedure.

(13) Install the drive-belt splash shield and fasteners (Fig. 4).

(14) Install the screws fastening the front fascia to the reinforcement (Fig. 4).

(15) Install the right front tire and wheel assembly. Install and tighten the wheel mounting nuts to a torque of 135 N·m (100 ft. lbs.).

(16) Lower the vehicle.

(17) Remove the bungee cord and move the cooling module back into is lower mounts.

(18) If previously removed, install the right side bolts securing the lower radiator closure panel in front of the cooling module.

(19) Install the radiator closure panel and fasten it in place (Fig. 10).

(20) Install the ambient temperature sensor on the radiator closure panel (Fig. 9).

(21) Install the hood-opening weather-strip across the radiator closure panel.

(22) Install the grille on the front of the vehicle (Fig. 8).

(23) Perform the POWER STEERING PUMP INITIAL OPERATION service procedure to properly fill and bleed the power steering system. (Refer to 19 - STEERING/PUMP - STANDARD PROCEDURE)

(24) Check for leaks.

INSTALLATION - 2.4L TURBO

(1) Using a lint free towel, wipe clean open power steering pressure hose end and power steering pump pressure port. Replace any used O-rings with new. Lubricate O-ring with clean power steering fluid.

(2) Install power steering pump with pulley and reservoir into its mounting area in same fashion it was removed.

(3) Place pump in mounting position with stamped steel support bracket behind it. Install three pump mounting bolts through bracket and pump, into threaded engine cover (Fig. 20). DO NOT TIGHTEN BOLTS AT THIS TIME.

(4) Install two bolts fastening support bracket to engine block (Fig. 21). Tighten two bolts to 54 N·m (40 ft. lbs.) torque.

(5) Tighten three pump mounting bolts previously installed (Fig. 20) to 28 N·m (250 in. lbs.) torque.

PUMP (Continued)

(6) Thread pressure hose tube nut into pump pressure fitting (Fig. 19). Tighten tube nut to 32 N·m (24 ft. lbs.) torque.

(7) Install fluid return hose onto power steering fluid reservoir return fitting (Fig. 19). Expand hose clamp and slide it over hose and pump return fitting. Secure clamp once it is past bead formed into fluid reservoir fitting.

(8) Position radiator fan and install two upper and two side mounting screws (Fig. 16). Tighten screws to 6 N·m (55 in. lbs.) torque.

(9) Position cooling module back into its lower mounts.

(10) Clean and inspect or replace upper radiator hose inlet neck O-ring, then install inlet neck to radiator (Fig. 18). Install 2 mounting screws.

(11) Install radiator closure panel and fasten it in place (Fig. 10).

(12) Install ambient temperature sensors on radiator closure panel (Fig. 17).

(13) Install hood-opening weather-strip across radiator closure panel.

(14) Install grille on front of vehicle (Fig. 8).

(15) Raise vehicle.

(16) Install accessory drive belt. (Refer to 7 - COOLING/ACCESSORY DRIVE/DRIVE BELTS - INSTALLATION)

(17) Install accessory drive belt splash shield.

(18) Install two remaining lower fan mounting screws (Fig. 16). Tighten screws to 6 N·m (55 in. lbs.) torque.

(19) Connect radiator fan wiring connector (Fig. 15).

(20) Install right front tire and wheel assembly. Install and tighten wheel mounting nuts to 135 N·m (100 ft. lbs.) torque.

(21) Lower vehicle.

(22) Fill cooling system (Refer to 7 - COOLING - STANDARD PROCEDURE - FILLING COOLING SYSTEM).

(23) Perform POWER STEERING PUMP INITIAL OPERATION procedure to properly fill and bleed power steering system. (Refer to 19 - STEERING/ PUMP - STANDARD PROCEDURE)

(24) Check for leaks.

INSTALLATION - 2.2L DIESEL

The power steering pump is attached to the water pump as an assembly on the engine. To install the power steering pump, (Refer to 7 - COOLING/ENGINE/WATER PUMP - INSTALLATION).

FLUID

STANDARD PROCEDURE - POWER STEERING FLUID LEVEL CHECKING

WARNING: FLUID LEVEL SHOULD BE CHECKED WITH THE ENGINE OFF TO PREVENT PERSONAL INJURY FROM MOVING PARTS.

CAUTION: Use only Mopar® ATF+4 Automatic Transmission Fluid (MS-9602) in the power steering system. Do not overfill.

1.6L GAS/2.2L DIESEL ENGINE

The power steering fluid level can be viewed through the side of the power steering fluid reservoir. Compare the fluid level to the markings on the side of the reservoir. When the fluid is at normal ambient temperature, approximately 21°C to 27°C (70°F to 80°F), the fluid level should read between the MAX. COLD and MIN. COLD markings. When the fluid is hot, fluid level is allowed to read up to the highest end of the MAX. HOT range.

2.0L/2.4L ENGINE

The power steering fluid level can be viewed on the dipstick attached to the filler cap. There are two ranges listed on the dipstick, COLD and HOT. Before opening power steering system, wipe the reservoir filler cap free of dirt and debris. Remove the cap and check the fluid level on the dipstick. When the fluid is at normal ambient temperature, approximately 21°C to 27°C (70°F to 80°F), the fluid level should read between the minimum and maximum area of the COLD range. When the fluid is hot, fluid level is allowed to read up to the highest end of the HOT range.

2.4L TURBO ENGINE

The power steering fluid level can be viewed on the dipstick attached to the filler cap. Before opening power steering system, wipe the reservoir filler cap free of dirt and debris. Remove the cap and check the fluid level on the dipstick. When the fluid is at normal ambient temperature, approximately 21°C to 27°C (70°F to 80°F), the fluid level should read between the FULL and ADD markings.

FLUID COOLER

DESCRIPTION

All models of this vehicle are equipped with a cooler for the power steering system fluid. Vehicles not equipped with a turbocharged engine use a power steering fluid cooler that is located at the front of the front suspension crossmember (Fig. 24) (Fig. 25). It is mounted to the crossmember top surface using 2 fasteners. Vehicles equipped with a turbocharged engine use a cooler that is integrated into the radiator.

The cooler is placed in series with the power steering fluid return hose, between the steering gear fluid outlet port and the fluid return hose leading to the power steering fluid reservoir.

REMOVAL - NON-TURBO ENGINES

NOTE: Before proceeding, (Refer to 19 - STEERING - WARNING).

(1) Siphon as much fluid as possible from the power steering fluid reservoir.

(2) Raise the vehicle. (Refer to LUBRICATION & MAINTENANCE/HOISTING - STANDARD PROCEDURE).

(3) Remove the hose clamp attaching the power steering fluid return hose to the power steering fluid cooler. Remove the return hose from the cooler.

(4) Remove the hose clamp attaching the power steering cooler fluid hose to the steel fitting in the power steering gear outlet port (Fig. 24) (Fig. 25).

(5) Remove the two screws securing the cooler to the front suspension crossmember (Fig. 24) (Fig. 25).

(6) On LHD vehicles, open the tube routing clamp on the right front of the power steering gear housing and remove the cooler tube from it.

(7) Remove the cooler from the vehicle.

INSTALLATION - NON-TURBO ENGINES

(1) Slide a hose clamp onto the end of the power steering cooler inlet hose (gear end) far enough to clear the steel fitting on the power steering gear once the hose is installed.

(2) On LHD vehicles, align the cooler outlet tube with the open tube routing clamp on the right front of the power steering gear housing (Fig. 24), and snap it into place. Close the clamp.

(3) Slide the hose (with cooler attached) onto the steering gear outlet fitting (Fig. 24) (Fig. 25).

(4) Install the hose clamp on the power steering cooler fluid hose past the bead formed into the steel fitting and secure in place.

(5) Install the two screws attaching the cooler to the front suspension crossmember (Fig. 24) (Fig. 25).

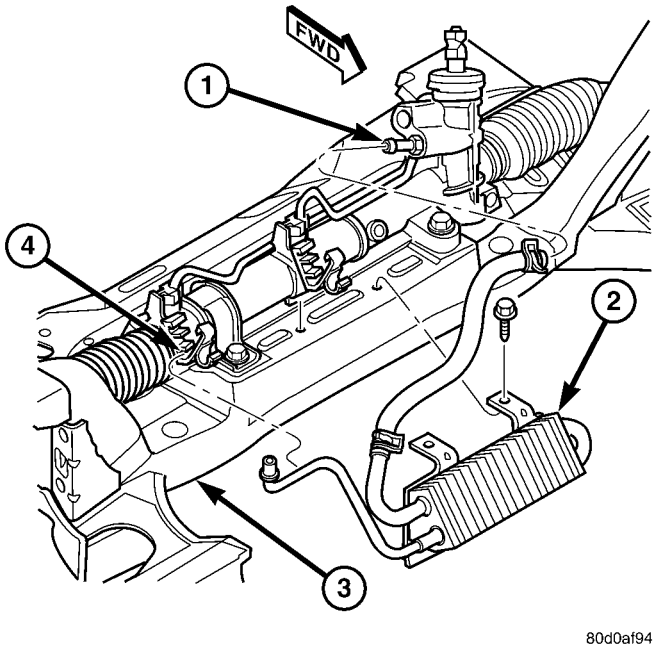

Fig. 24 Power Steering Cooler - LHD

1 - STEERING GEAR OUTLET FITTING
2 - POWER STEERING COOLER
3 - FRONT SUSPENSION CROSSMEMBER
4 - TUBE CLAMP

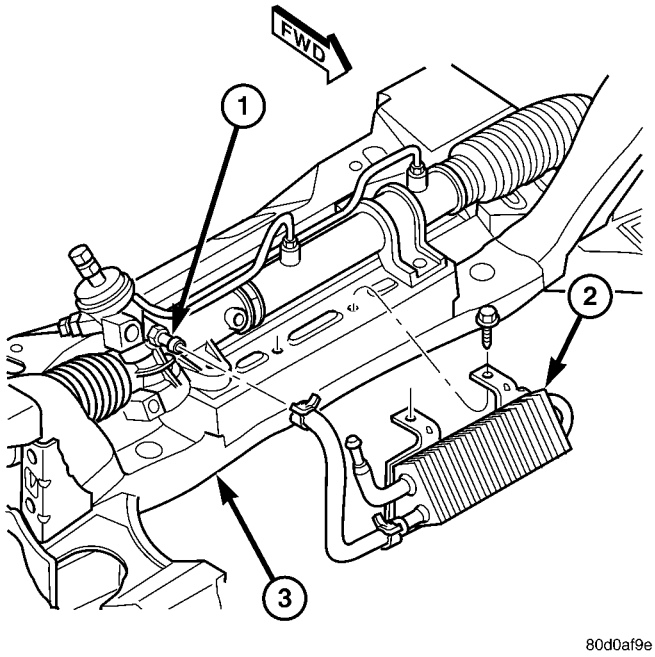

Fig. 25 Power Steering Cooler - RHD

1 - STEERING GEAR OUTLET FITTING
2 - POWER STEERING COOLER
3 - FRONT SUSPENSION CROSSMEMBER

Tighten the cooler attaching screws to a torque of 10 N·m (90 in. lbs.).

FLUID COOLER (Continued)

(6) Install the power steering fluid return hose on the power steering fluid cooler outlet tube. Install the hose clamp on the power steering return hose securing it to the power steering cooler. Be sure the hose clamp is installed on the return hose past the bead on the end of the cooler tube.

(7) Lower the vehicle.

(8) Perform the POWER STEERING PUMP INITIAL OPERATION procedure. (Refer to 19 - STEERING/PUMP - STANDARD PROCEDURE)

(9) Check for leaks.

HOSE - POWER STEERING PRESSURE

REMOVAL

REMOVAL - 2.0L ENGINE

NOTE: Before proceeding, (Refer to 19 - STEERING - WARNING).

(1) Siphon as much fluid as possible from the power steering fluid reservoir.

(2) Raise the vehicle. (Refer to LUBRICATION & MAINTENANCE/HOISTING - STANDARD PROCEDURE)

(3) Back out the tube nut securing the power steering fluid pressure hose to the gear (Fig. 28) (Fig. 26).

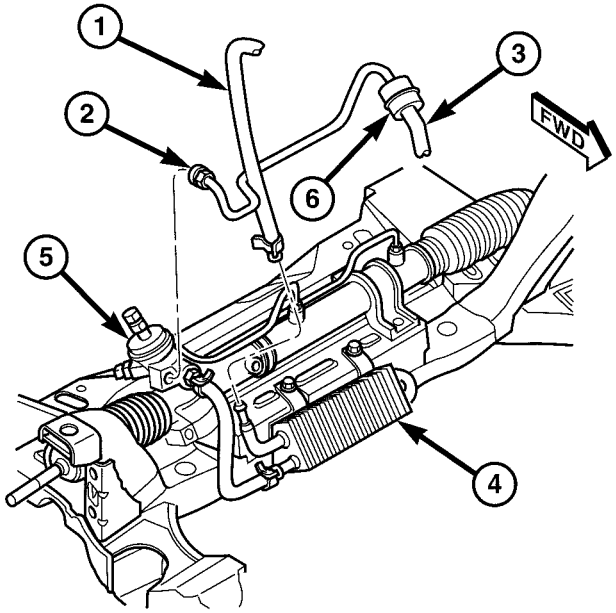

80d07508

Fig. 26 HOSES AT RHD GEAR AND COOLER

1 - RETURN HOSE
2 - TUBE NUT
3 - PRESSURE HOSE
4 - FLUID COOLER
5 - POWER STEERING GEAR
6 - FOAM SLEEVE

(4) Pull the hose tube out of the gear and drain the fluid from the hose.

(5) Remove the structural collar between the engine and transaxle (Fig. 27).

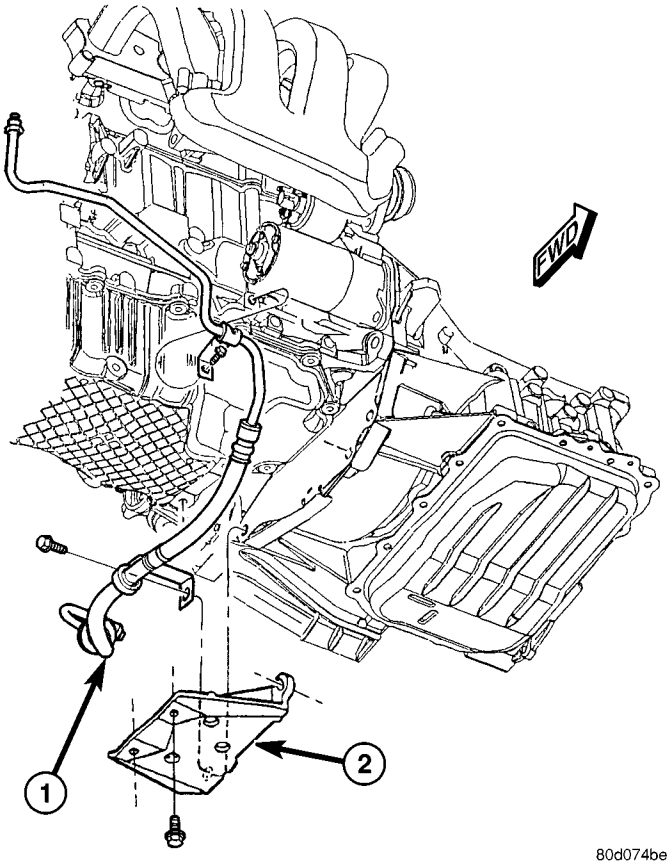

80d074be

Fig. 27 PRESSURE HOSE ROUTING - 2.0L ENGINE

1 - PRESSURE HOSE
2 - STRUCTURAL COLLAR

(6) Remove the bolt securing the pressure hose bracket to the engine block (Fig. 27).

(7) Remove the right front tire and wheel assembly.

(8) Remove the screws fastening the front fascia to the reinforcement as necessary in order to access the drive-belt splash shield forward fastener screw (Fig. 31).

(9) Remove the drive-belt splash shield fasteners (Fig. 31). Remove the shield.

(10) Remove the accessory drive-belt from the A/C compressor. (Refer to 7 - COOLING/ACCESSORY DRIVE/DRIVE BELTS - REMOVAL)

(11) Remove the electrical connectors from the A/C compressor (Fig. 32).

(12) Remove the four bolts fastening the A/C compressor to the engine (Fig. 32), then move the compressor toward the center of the vehicle, allowing the compressor to settle in place.

(13) Remove the pressure hose from the pump in the following fashion:

HOSE - POWER STEERING PRESSURE (Continued)

(a) Place a crowfoot wrench on a long extension onto the pressure hose tube nut at the pump (Fig. 33).

(b) Place a shop towel between the crowfoot and the pump pulley to avoid slipping and possibly damaging the pulley.

(c) Unthread the tube nut from the pump.

(14) Remove the power steering pressure hose from the vehicle.

REMOVAL - 2.4L ENGINE

NOTE: Before proceeding, (Refer to 19 - STEERING - WARNING).

(1) Siphon as much fluid as possible from the power steering fluid reservoir.

(2) Raise the vehicle. (Refer to LUBRICATION & MAINTENANCE/HOISTING - STANDARD PROCEDURE)

(3) Back out the tube nut securing the power steering fluid pressure hose to the gear (Fig. 28) (Fig. 26).

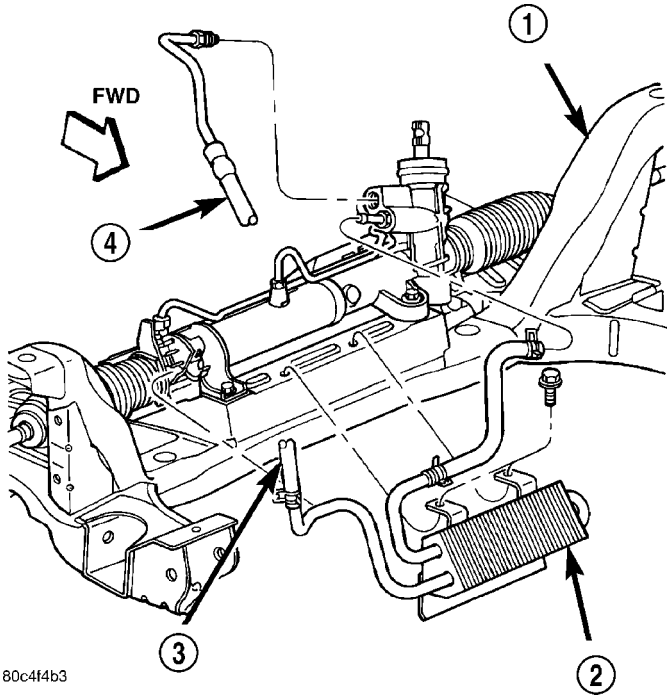

Fig. 28 Hoses At LHD Gear And Cooler

1 - CROSSMEMBER
2 - COOLER
3 - RETURN HOSE
4 - PRESSURE HOSE

(4) Pull the hose tube out of the gear and drain the fluid from the hose.

(5) Remove the bolts securing the pressure hose routing clamps to the engine's structural collar (Fig. 29).

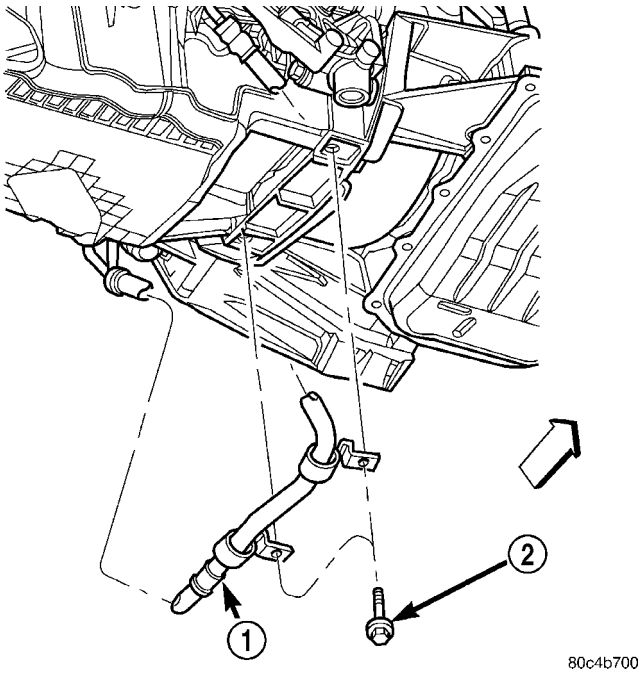

Fig. 29 Routing Clamp Bolts

1 - POWER STEERING HOSE
2 - BOLT

(6) Remove the bolt securing the pressure hose routing clamp to the front of the engine (Fig. 30).

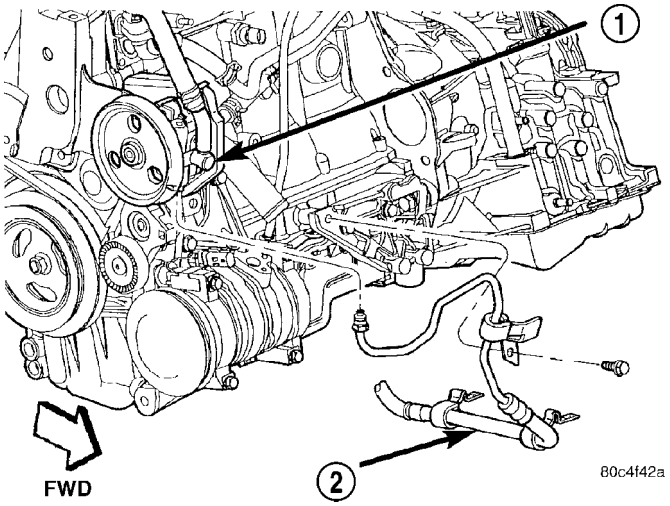

Fig. 30 Hose Connection To Pump And Engine

1 - PUMP
2 - PRESSURE HOSE

(7) Remove the right front tire and wheel assembly.

HOSE - POWER STEERING PRESSURE (Continued)

(8) Remove the screws fastening the front fascia to the reinforcement as necessary in order to access the drive-belt splash shield forward fastener screw (Fig. 31).

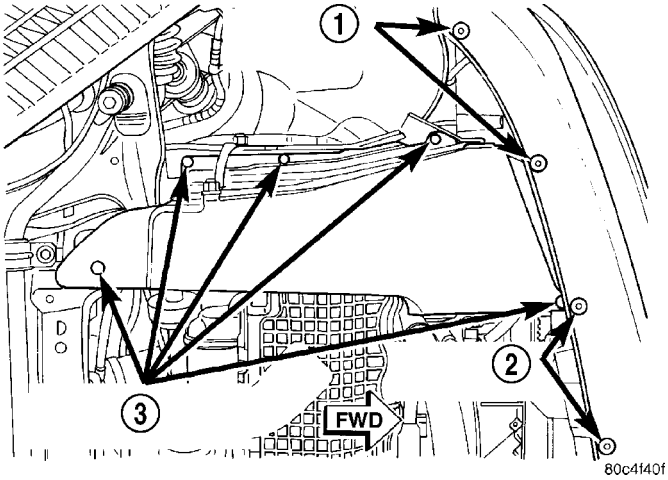

Fig. 31 Fascia And Splash Shield Fasteners

1 - FASCIA FASTENERS
2 - FASCIA FASTENERS
3 - SPLASH SHIELD FASTENERS

(9) Remove the drive-belt splash shield fasteners (Fig. 31). Remove the shield.

(10) Remove the accessory drive-belt from the A/C compressor. (Refer to 7 - COOLING/ACCESSORY DRIVE/DRIVE BELTS - REMOVAL)

(11) Remove the electrical connectors from the A/C compressor (Fig. 32).

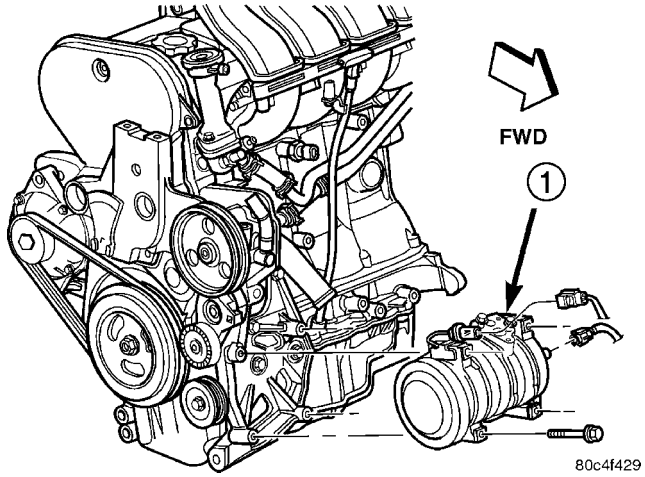

Fig. 32 A/C Compressor Mounting

1 - COMPRESSOR

(12) Remove the four bolts fastening the A/C compressor to the engine (Fig. 32), then move the compressor toward the center of the vehicle, allowing the compressor to settle in place.

(13) Remove the pressure hose from the pump in the following fashion (Fig. 30) (Fig. 33):

(a) Place a crowfoot wrench on a long extension onto the pressure hose tube nut at the pump.

(b) Place a shop towel between the crowfoot and the pump pulley to avoid slipping and possibly damaging the pulley.

(c) Unthread the tube nut from the pump.

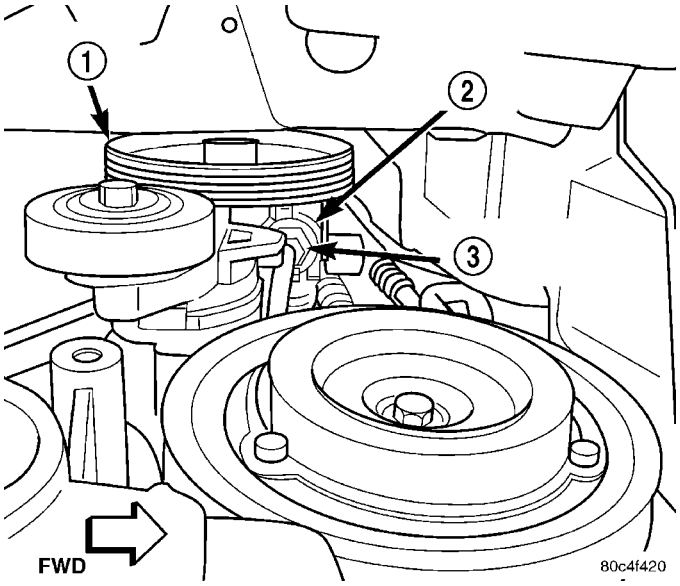

Fig. 33 Hose Fitting At Pump (View From Below)

1 - PUMP PULLEY
2 - POWER STEERING PUMP
3 - PRESSURE HOSE TUBE NUT

(14) Remove the power steering pressure hose from the vehicle.

REMOVAL - 2.2L DIESEL

NOTE: Before proceeding, (Refer to 19 - STEERING - WARNING).

(1) Siphon as much fluid as possible from power steering fluid reservoir.

(2) Raise vehicle. (Refer to LUBRICATION & MAINTENANCE/HOISTING - STANDARD PROCEDURE)

(3) Remove lower engine compartment silencer assembly and accessory drive belt splash shield (Fig. 34).

(4) Back out tube nut securing power steering fluid pressure hose to power steering gear (Fig. 35).

(5) Pull pressure hose tube out of gear port and drain fluid from hose.

(6) Remove bolts securing pressure hose routing clamps to engine oil pan (Fig. 36).

(7) Remove accessory drive belt (Refer to 7 - COOLING/ACCESSORY DRIVE/DRIVE BELT - REMOVAL).

(8) Remove 3 bolts securing pulley to power steering pump (Fig. 37). Remove pulley.

HOSE - POWER STEERING PRESSURE (Continued)

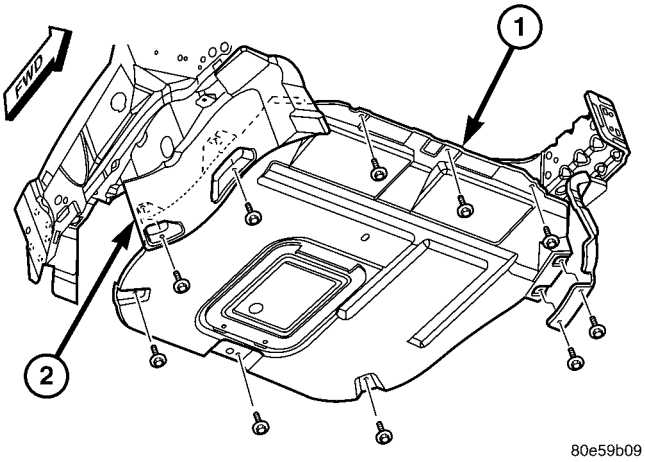

Fig. 34 Engine Compartment Lower Silencer

1 - ENGINE COMPARTMENT SILENCER
2 - ACCESSORY DRIVE BELT SPLASH SHIELD

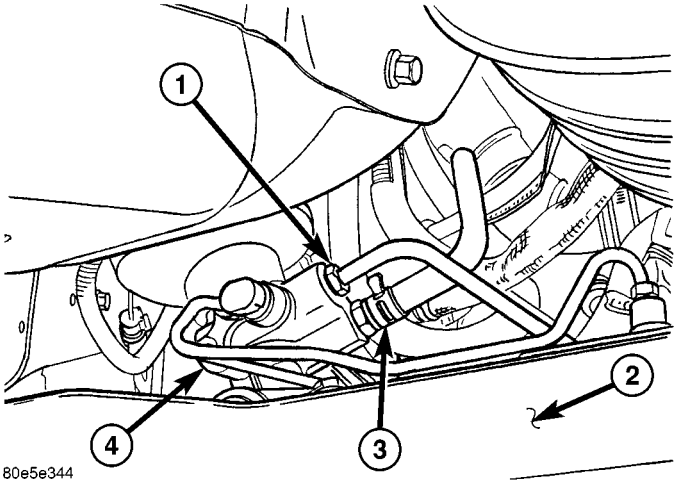

Fig. 35 Hose Connections At LHD Steering Gear (RHD Typical)

1 - PRESSURE HOSE TUBE NUT
2 - REAR OF FRONT SUSPENSION CROSSMEMBER
3 - RETURN HOSE CLAMP
4 - POWER STEERING GEAR - LHD SHOWN

(9) Back out tube nut securing power steering fluid pressure hose to power steering pump and remove hose from pump (Fig. 37).

(10) Remove power steering pressure hose from vehicle.

INSTALLATION

INSTALLATION - 2.0L ENGINE

CAUTION: Power steering fluid hoses must remain away from the exhaust system, driveshafts, vehicle components and any unfriendly surface that can possibly damage the hoses.

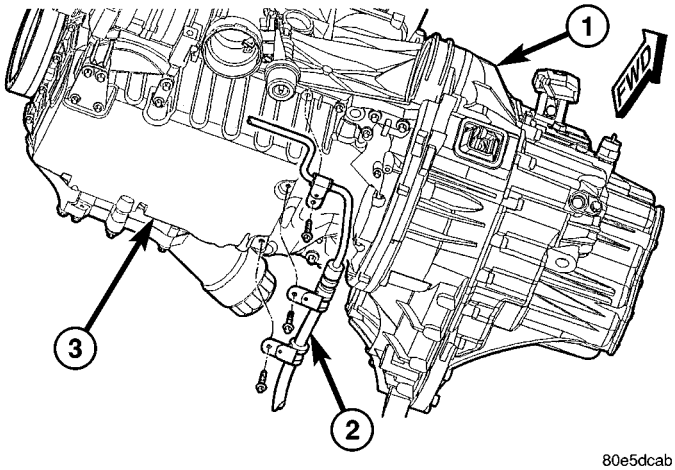

Fig. 36 Pressure Hose Attachment To Oil Pan

1 - TRANSAXLE
2 - PRESSURE HOSE
3 - ENGINE OIL PAN

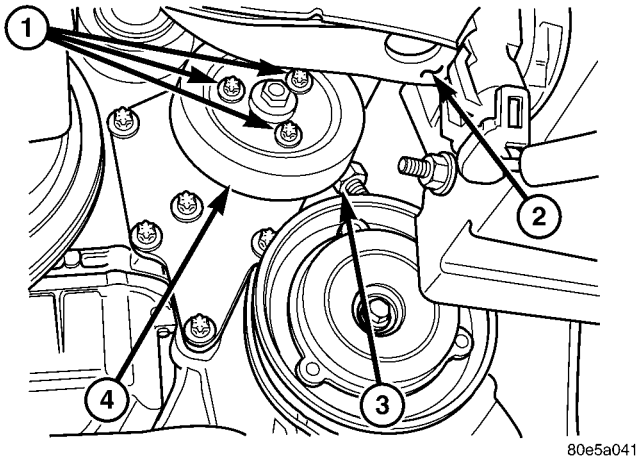

Fig. 37 Pump Pulley Mounting

1 - PULLEY MOUNTING BOLTS
2 - RIGHT FRAME RAIL
3 - PRESSURE HOSE FITTING
4 - PULLEY

(1) Using a lint free towel, wipe clean the open power steering hose end and the power steering pump port. Replace any used O-rings with new. Lubricate the O-ring with power steering fluid.

(2) Install the power steering pressure hose into the engine compartment from the bottom. Guide the pump end of the hose up past the left side of the A/C compressor and into the pump pressure fitting.

(3) Start the mounting bolt through the routing bracket, loosely attaching the pressure hose to the engine block (Fig. 27).

(4) Thread the hose tube nut into the pump (Fig. 33).

HOSE - POWER STEERING PRESSURE (Continued)

(5) Using a crowfoot wrench on a long extension with a torque wrench, tighten the pressure hose tube nut at the power steering pump to a torque of 68 N·m (50 ft. lbs.).

(6) Install the four bolts fastening the A/C compressor to the engine (Fig. 32). Tighten the mounting bolts to a torque of 28 N·m (250 in. lbs.).

(7) Install the A/C compressor electrical connectors (Fig. 32).

(8) Install the A/C drive belt. (Refer to 7 - COOLING/ACCESSORY DRIVE/DRIVE BELTS - INSTALLATION)

(9) Install the drive-belt splash shield and fasteners (Fig. 31).

(10) Install the screws fastening the front fascia to the reinforcement (Fig. 31).

(11) Install the right front tire and wheel assembly. Install and tighten the wheel mounting nuts to a torque of 135 N·m (100 ft. lbs.).

(12) Tighten the mounting bolt securing the pressure hose and routing bracket to the engine block (Fig. 27) to a torque of 61 N·m (45 ft. lbs.).

(13) Route the hose below the oil pan near the transaxle and install the structural collar along with the hose routing bracket (Fig. 27) using the following sequence:

NOTE: Use care not to pinch pressure hose between collar and engine.

(a) Install and tighten the collar-to-oil pan bolts to 3 N·m (30 in. lbs.) torque.

(b) Install and tighten the collar-to-transaxle bolts to 108 N·m (80 ft. lbs.) torque.

(c) Repeat tightening of collar-to-oil pan bolts to a final torque of 54 N·m (40 ft. lbs.).

(14) Using a lint free towel, wipe clean the open power steering hose end and the power steering gear port. Replace any used O-rings with new. Lubricate the O-ring with power steering fluid.

CAUTION: Forward of the steering gear, the power steering fluid pressure hose routes between the front suspension crossmember and the driveshaft. When tightening the pressure hose tube nut to the steering gear, the pressure hose must be positioned (clocked) such that its final routing (after tightened to 47 N·m (35 ft. lbs.)) offers 4–10 mm clearance to the front suspension crossmember (measured at the pressure hose steel-to-rubber coupling).

(15) Attach the power steering fluid pressure hose to its port on the power steering gear (Fig. 28) (Fig. 26). While making sure the hose is not in contact with any vehicle components (see preceding caution), tighten the pressure hose tube nut at the gear to a torque of 47 N·m (35 ft. lbs.).

(16) Lower the vehicle.

(17) Perform the POWER STEERING PUMP INITIAL OPERATION procedure. (Refer to 19 - STEERING/PUMP - STANDARD PROCEDURE)

(18) Check for leaks at all hose connections.

INSTALLATION - 2.4L ENGINE

CAUTION: Power steering fluid hoses must remain away from the exhaust system, driveshafts, vehicle components and any unfriendly surface that can possibly damage the hoses.

(1) Using a lint free towel, wipe clean the open power steering hose end and the power steering pump port. Replace any used O-rings with new. Lubricate the O-ring with power steering fluid.

(2) Install the power steering pressure hose into the engine compartment from the bottom. Guide the pump end of the hose up past the left side of the A/C compressor and into the pump pressure fitting (Fig. 30).

(3) Start the mounting bolt through the routing bracket, loosely attaching the pressure hose to the front of the engine (Fig. 30).

(4) Thread the hose tube nut into the pump (Fig. 33).

(5) Using a crowfoot wrench on a long extension with a torque wrench, tighten the pressure hose tube nut at the power steering pump to a torque of 68 N·m (50 ft. lbs.).

(6) Install the four bolts fastening the A/C compressor to the engine (Fig. 32). Tighten the mounting bolts to a torque of 28 N·m (250 in. lbs.).

(7) Install the A/C compressor electrical connectors (Fig. 32).

(8) Install the A/C drive belt. (Refer to 7 - COOLING/ACCESSORY DRIVE/DRIVE BELTS - INSTALLATION)

(9) Install the drive-belt splash shield and fasteners (Fig. 31).

(10) Install the screws fastening the front fascia to the reinforcement (Fig. 31).

(11) Install the right front tire and wheel assembly. Install and tighten the wheel mounting nuts to a torque of 135 N·m (100 ft. lbs.).

(12) Tighten the mounting bolt securing the pressure hose and routing bracket to the front of the engine to a torque of 61 N·m (45 ft. lbs.).

(13) Attach the pressure hose and routing brackets to the structural collar (Fig. 29). Tighten the mounting bolts to a torque of 61 N·m (45 ft. lbs.).

(14) Using a lint free towel, wipe clean the open power steering hose end and the power steering gear

HOSE - POWER STEERING PRESSURE (Continued)

port. Replace any used O-rings with new. Lubricate the O-ring with power steering fluid.

CAUTION: Forward of the steering gear, the power steering fluid pressure hose routes between the front suspension crossmember and the driveshaft. When tightening the pressure hose tube nut to the steering gear, the pressure hose must be positioned (clocked) such that its final routing (after tightened to 47 N·m (35 ft. lbs.)) offers 4–10 mm clearance to the front suspension crossmember (measured at the pressure hose steel-to-rubber coupling).

(15) Attach the power steering fluid pressure hose to its port on the power steering gear (Fig. 28) (Fig. 26). While making sure the hose is not in contact with any vehicle components (see preceding caution), tighten the pressure hose tube nut at the gear to a torque of 47 N·m (35 ft. lbs.).

(16) Lower the vehicle.

(17) Perform the POWER STEERING PUMP INITIAL OPERATION procedure. (Refer to 19 - STEERING/PUMP - STANDARD PROCEDURE)

(18) Check for leaks at all hose connections.

INSTALLATION - 2.2L DIESEL

CAUTION: Power steering fluid hoses must remain away from the exhaust system, driveshafts, vehicle components and any unfriendly surface that can possibly damage hoses.

(1) Using a lint free towel, wipe clean open power steering hose end and power steering pump port. Replace any used O-rings with new. Lubricate O-ring with power steering fluid.

(2) Install power steering pressure hose into engine compartment from the bottom. Guide pump end of hose up past A/C compressor and into pump pressure fitting.

(3) Thread hose tube nut into pump pressure fitting, but do not fully tighten at this time.

(4) Install three bolts securing pressure hose routing clamps to engine oil pan (Fig. 36). Tighten three mounting bolts to a torque of 8 N·m (70 in. lbs.).

(5) Tighten pressure hose tube nut at power steering pump to a torque of 32 N·m (23 ft. lbs.).

(6) Install pump drive pulley (Fig. 37). Tighten three mounting bolts to a torque of 28 N·m (21 ft. lbs.).

(7) Install accessory drive belt. (Refer to 7 - COOLING/ACCESSORY DRIVE/DRIVE BELT - INSTALLATION)

(8) Using a lint free towel, wipe clean open power steering hose end and power steering gear port. Replace any used O-rings with new. Lubricate O-ring with power steering fluid.

(9) Attach power steering fluid pressure hose to pressure port on power steering gear (Fig. 35). While making sure hose is not in contact with any vehicle components, tighten pressure hose tube nut at steering gear to a torque of 32 N·m (23 ft. lbs.).

(10) Install lower engine compartment silencer assembly and drive belt splash shield (Fig. 34).

(11) Lower vehicle.

(12) Perform POWER STEERING PUMP INITIAL OPERATION procedure. (Refer to 19 - STEERING/PUMP - STANDARD PROCEDURE)

(13) Check for leaks at all hose connections.

HOSE - POWER STEERING PRESSURE/RETURN

REMOVAL - 2.4L TURBO

NOTE: Before proceeding, (Refer to 19 - STEERING - WARNING).

(1) Siphon as much fluid as possible from power steering fluid reservoir.

(2) Raise vehicle. (Refer to LUBRICATION & MAINTENANCE/HOISTING - STANDARD PROCEDURE)

(3) Drain engine coolant (Refer to 7 - COOLING/ENGINE - STANDARD PROCEDURE - DRAIN COOLING SYSTEM).

(4) Disconnect radiator fan wiring connector (Fig. 38).

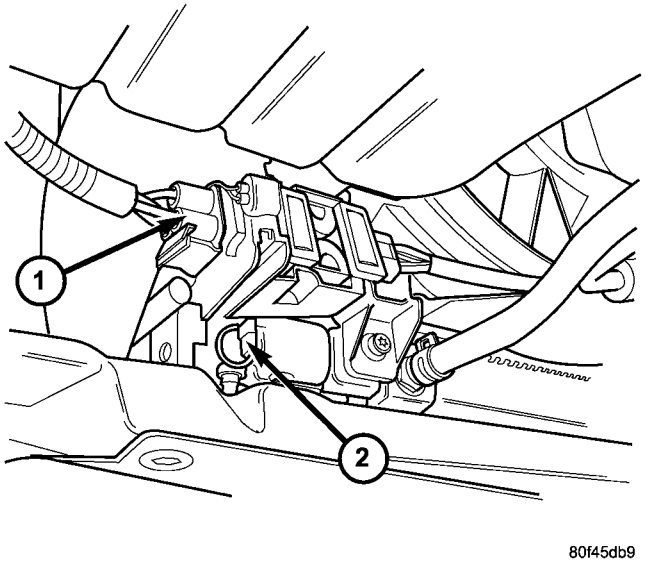

Fig. 38 Radiator Fan Connector - 2.4L Turbo

1 - RADIATOR FAN CONNECTOR
2 - RADIATOR DRAINCOCK

HOSE - POWER STEERING PRESSURE/RETURN (Continued)

(5) Remove two lower fan mounting screws (Fig. 39).

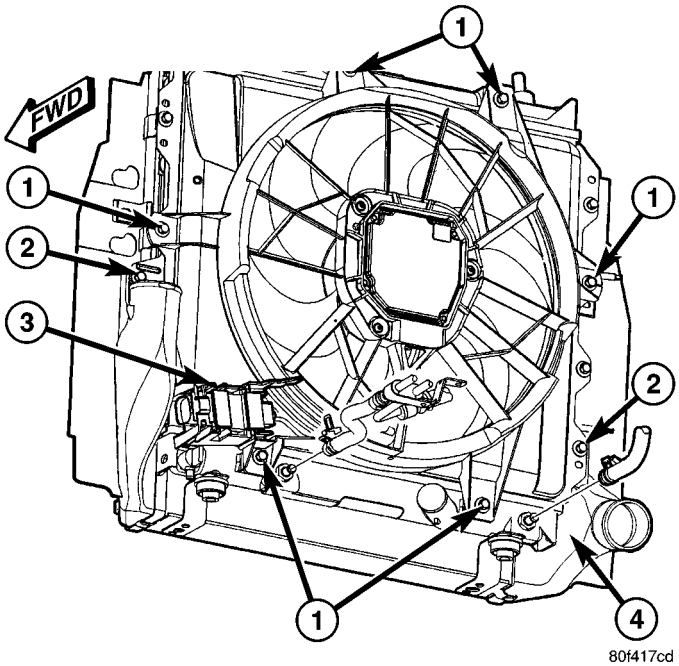

Fig. 39 Fan Mounting To Cooling Module - 2.4L Turbo

1 - RADIATOR FAN FASTENERS
2 - CHARGE AIR COOLER FASTENERS
3 - RADIATOR FAN CONNECTOR
4 - CHARGE AIR COOLER

(6) Lower vehicle.

(7) Remove grille from front of vehicle (Fig. 40).

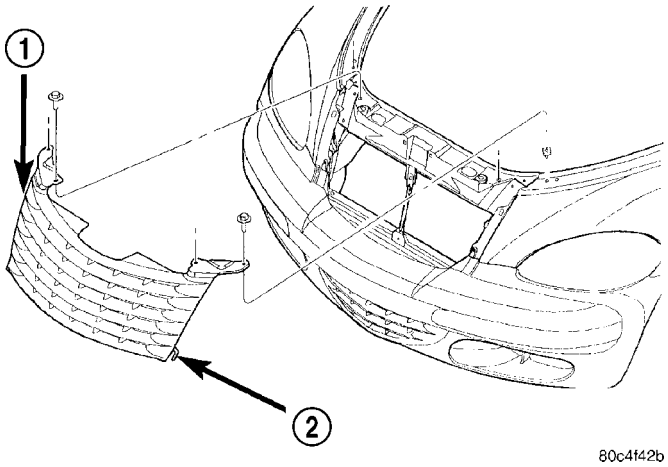

Fig. 40 Grille Attachment

1 - GRILLE
2 - RETAINER

(8) Remove hood-opening weather-strip from across radiator closure panel.

(9) Remove ambient temperature sensors from radiator closure panel (Fig. 41).

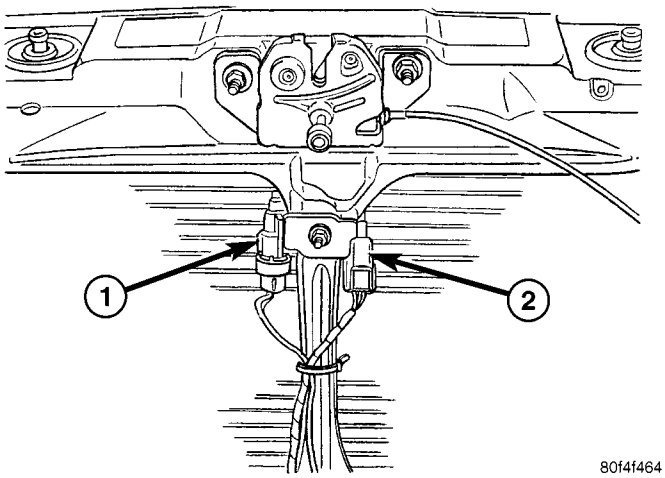

Fig. 41 Temperature Sensor Mounting

1 - AMBIENT TEMP SENSOR
2 - AMBIENT TEMP SENSOR

(10) Remove fasteners securing upper radiator closure panel in place (Fig. 42), then remove the panel and lay it out of way.

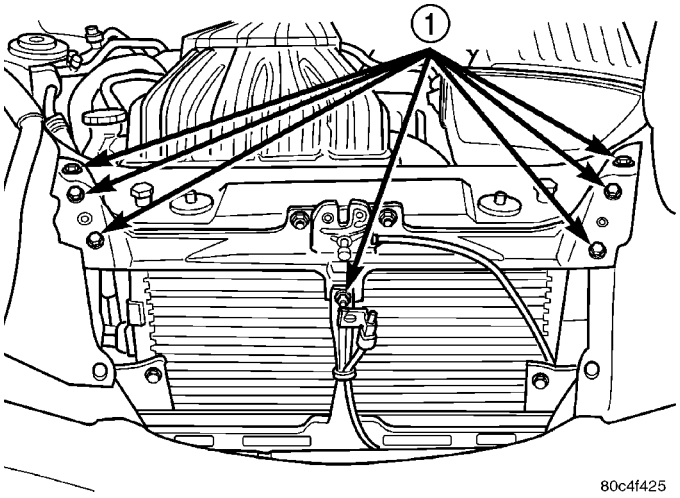

Fig. 42 Radiator Closure Panel

1 - FASTENERS

(11) Remove 2 screws fastening upper radiator hose inlet neck to radiator, then separate inlet neck from radiator (Fig. 43).

(12) Lift cooling module out of its lower mounts and carefully tip top toward front of vehicle. DO NOT FORCE IT.

(13) Remove remaining four screws fastening radiator fan to cooling module (Fig. 39). Remove fan.

(14) Remove clamp securing fluid return hose to pump reservoir (Fig. 44), then remove hose from reservoir fitting. Cap off hose end and reservoir fitting.

(15) Remove bolt securing fluid pressure hose routing clamp to engine (Fig. 44).

HOSE - POWER STEERING PRESSURE/RETURN (Continued)

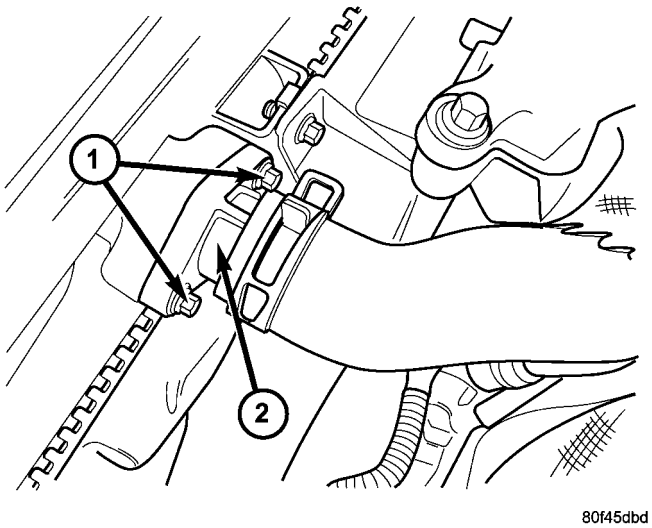

Fig. 43 Radiator Inlet Neck - 2.4L Turbo

1 - FASTENERS
2 - RADIATOR INLET NECK

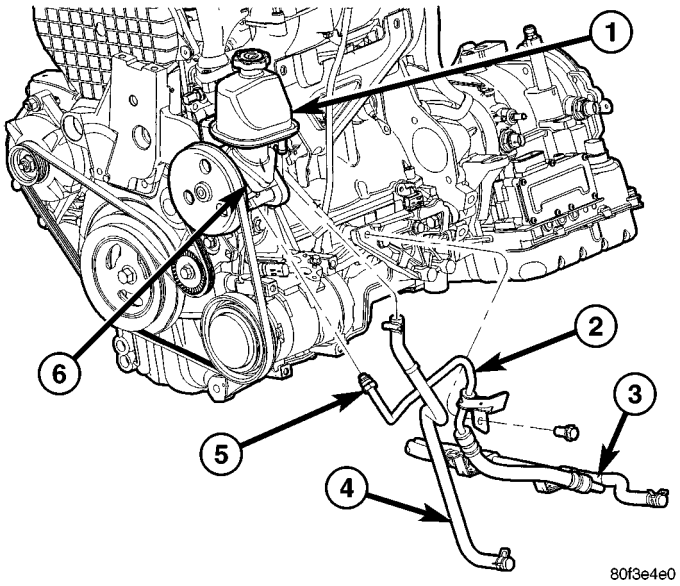

Fig. 44 Hoses At Pump And Engine - 2.4L Turbo

1 - RESERVOIR (MOUNTED TO PUMP)
2 - PRESSURE HOSE (SERVICED WITH RETURN HOSE)
3 - RETURN HOSE (SERVICED WITH PRESSURE HOSE)
4 - RETURN HOSE (COOLING MODULE TO RESERVOIR)
5 - TUBE NUT
6 - POWER STEERING PUMP

(16) Back out tube nut securing fluid pressure hose to power steering pump and remove hose from pump (Fig. 44). Cap off hose end and pump pressure port.

(17) Raise vehicle.

(18) Remove routing clip from fluid pressure hose tube near power steering gear (Fig. 45).

(19) Back out tube nut securing fluid pressure hose to power steering gear (Fig. 45).

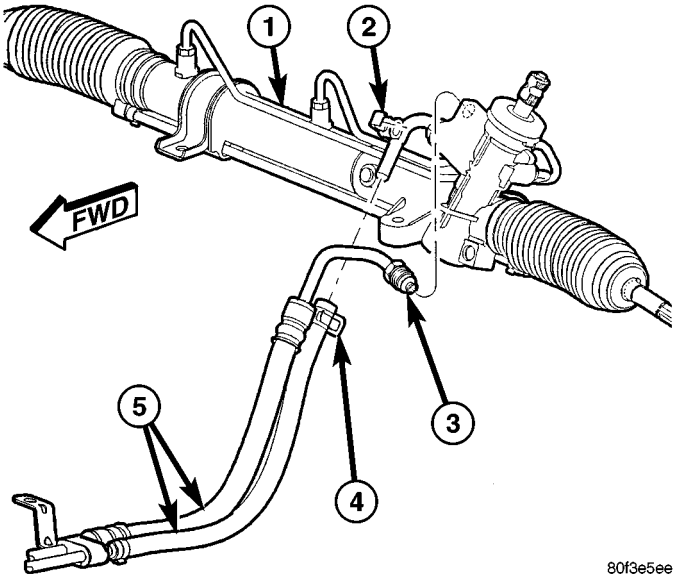

Fig. 45 Hoses At Power Steering Gear - 2.4L Turbo

1 - POWER STEERING GEAR
2 - ROUTING CLIP
3 - PRESSURE HOSE TUBE NUT
4 - RETURN HOSE CLAMP
5 - PRESSURE/RETURN HOSE ASSEMBLY

(20) Remove hose clamp securing return hose to tube in power steering gear outlet port (Fig. 45). Slide hose off end of tube.

(21) Remove hose clamp securing return hose (from steering gear) to fitting on internal cooler located within radiator portion of cooling module (Fig. 46). Slide hose off fitting.

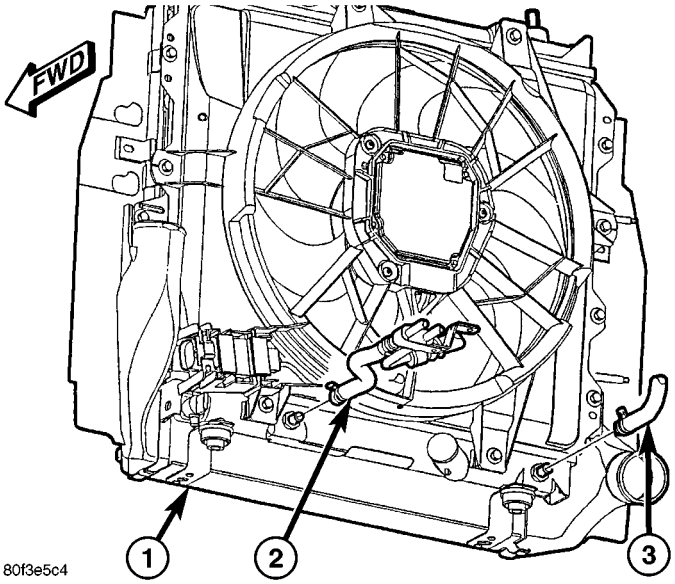

Fig. 46 Hoses At Cooling Module

1 - COOLING MODULE
2 - RETURN HOSE FROM STEERING GEAR
3 - RETURN HOSE TO RESERVOIR

HOSE - POWER STEERING PRESSURE/RETURN (Continued)

(22) Remove nuts securing charge air cooler hose to bolts in engine's structural collar (Fig. 47).

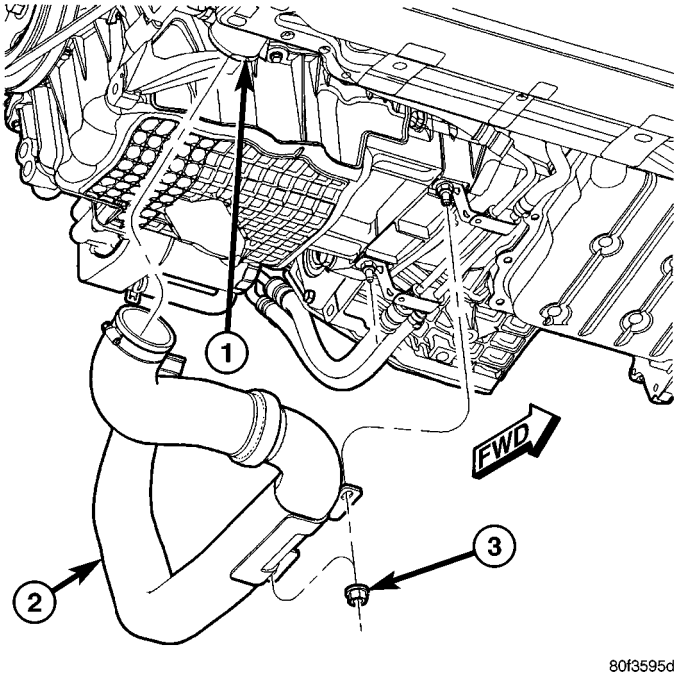

Fig. 47 Charge Air Cooler Hoses

1 - CHARGE AIR COOLER
2 - HOSE - TURBOCHARGER TO CHARGE AIR COOLER
3 - NUT

(23) Remove bolts securing pressure/return hose routing clamps to engine's structural collar (Fig. 48).

(24) Remove pressure/return hose assembly from vehicle.

INSTALLATION - 2.4L TURBO

(1) Using a lint free towel, wipe clean open power steering hose ends and power steering pump and gear ports. Replace any used O-rings with new. Lubricate O-rings with power steering fluid.

(2) Install power steering pressure/return hose assembly into engine compartment from below.

(3) Attach pressure/return hose routing clamps to engine's structural collar (Fig. 48). Tighten mounting bolts to 61 N·m (45 ft. lbs.) torque.

(4) Attach charge air cooler hose to bolts in engine's structural collar (Fig. 47). Tighten nuts to 31 N·m (23 ft. lbs.) torque.

(5) Position hose clamp onto end of return hose (from steering gear) far enough to clear fitting on internal cooler located within radiator portion of cooling module.

(6) Slide return hose onto internal cooler fitting (Fig. 46). Install hose clamp on hose past bead formed into end of fitting and secure in place.

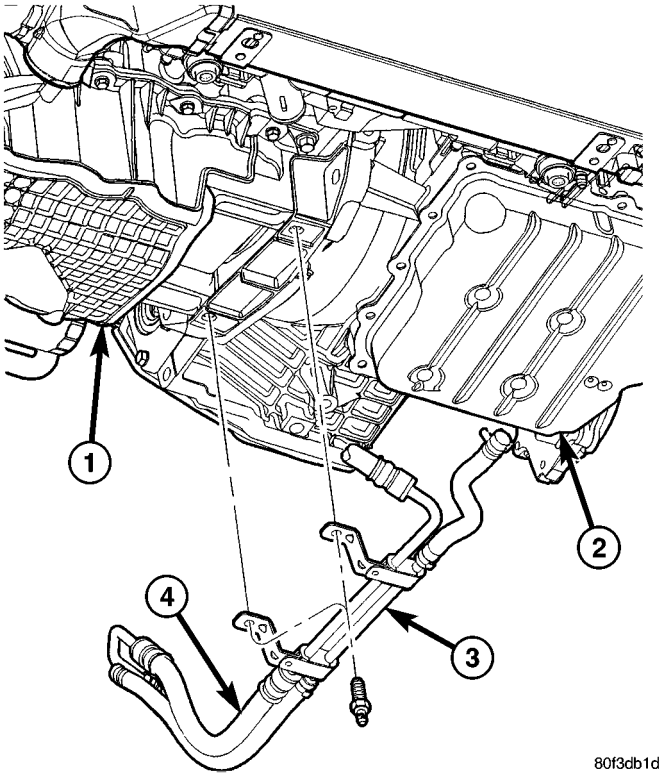

Fig. 48 Routing Clamp Bolts At Structural Collar

1 - ENGINE
2 - TRANSAXLE
3 - RETURN HOSE (SERVICED WITH PRESSURE HOSE)
4 - PRESSURE HOSE (SERVICED WITH RETURN HOSE)

(7) Position hose clamp onto end of return hose (at steering gear) far enough to clear tube in steering gear outlet port once installed.

(8) Slide return hose onto tube extending from power steering gear outlet port (Fig. 45). Install hose clamp on hose past bead formed into end of tube and secure in place.

(9) Thread fluid pressure hose into inlet port on power steering gear (Fig. 45). DO NOT TIGHTEN AT THIS TIME.

(10) Install routing clip up from gear outlet tube onto fluid pressure hose tube (Fig. 45).

(11) While making sure fluid pressure hose stays in routing clip, parallel with return hose, tighten pressure hose tube nut at gear to 47 N·m (35 ft. lbs.) torque.

(12) lower vehicle

(13) Thread fluid pressure hose into power steering pump pressure port (Fig. 44). DO NOT TIGHTEN AT THIS TIME.

(14) Install mounting bolt through routing bracket, attaching pressure hose to front of engine (Fig. 44). Tighten mounting bolt to 61 N·m (45 ft. lbs.) torque.

(15) Tighten pressure hose tube nut at pump to 68 N·m (50 ft. lbs.) torque.

HOSE - POWER STEERING PRESSURE/RETURN (Continued)

(16) Position radiator fan and install two upper and two side mounting screws (Fig. 39). Tighten screws to 6 N·m (55 in. lbs.) torque.

(17) Position cooling module back into its lower mounts.

(18) Clean and inspect or replace upper radiator hose inlet neck O-ring, then install inlet neck to radiator (Fig. 43). Install 2 mounting screws.

(19) Install radiator closure panel and fasten it in place (Fig. 42).

(20) Install ambient temperature sensors on radiator closure panel (Fig. 41).

(21) Install hood-opening weather-strip across radiator closure panel.

(22) Install grille on front of vehicle (Fig. 40).

(23) Raise vehicle.

(24) Install two remaining lower fan mounting screws (Fig. 39). Tighten screws to 6 N·m (55 in. lbs.) torque.

(25) Connect radiator fan wiring connector (Fig. 38).

(26) Fill cooling system (Refer to 7 - COOLING - STANDARD PROCEDURE - FILLING COOLING SYSTEM).

(27) Perform POWER STEERING PUMP INITIAL OPERATION procedure to properly fill and bleed power steering system. (Refer to 19 - STEERING/ PUMP - STANDARD PROCEDURE)

(28) Check for leaks.

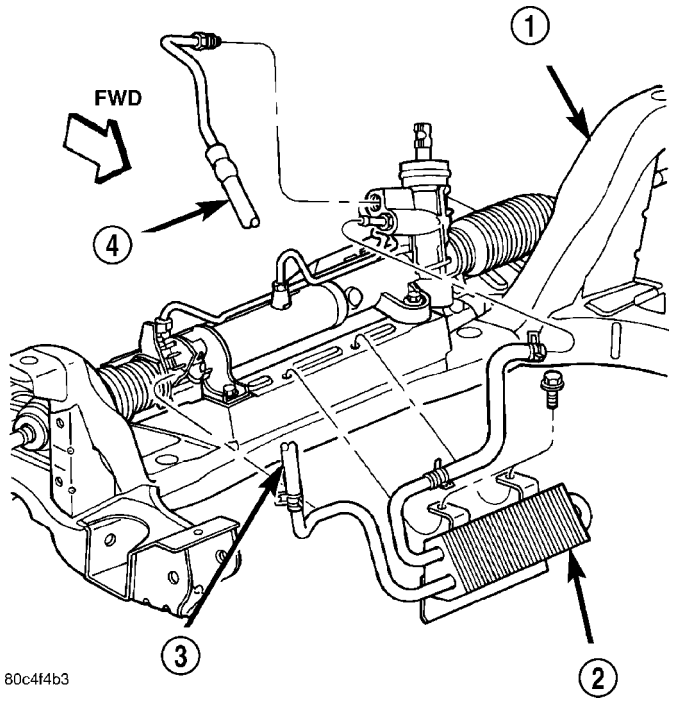

Fig. 49 Return Hose At LHD Cooler

1 - CROSSMEMBER
2 - COOLER
3 - RETURN HOSE
4 - PRESSURE HOSE

HOSE - POWER STEERING RETURN

REMOVAL

REMOVAL - 2.0L/2.4L ENGINE

NOTE: Before proceeding, (Refer to 19 - STEERING - WARNING).

(1) Siphon as much fluid as possible from the power steering fluid reservoir.

(2) Raise the vehicle. (Refer to LUBRICATION & MAINTENANCE/HOISTING - STANDARD PROCEDURE)

(3) Remove the hose clamp securing the return hose to the power steering fluid cooler (Fig. 49) (Fig. 26). Slide the hose off the end of the cooler tube.

(4) Lower the vehicle.

(5) Remove the hose clamp securing the return hose to the power steering fluid reservoir (Fig. 50). Slide the hose off the end of the reservoir fitting and remove from vehicle.

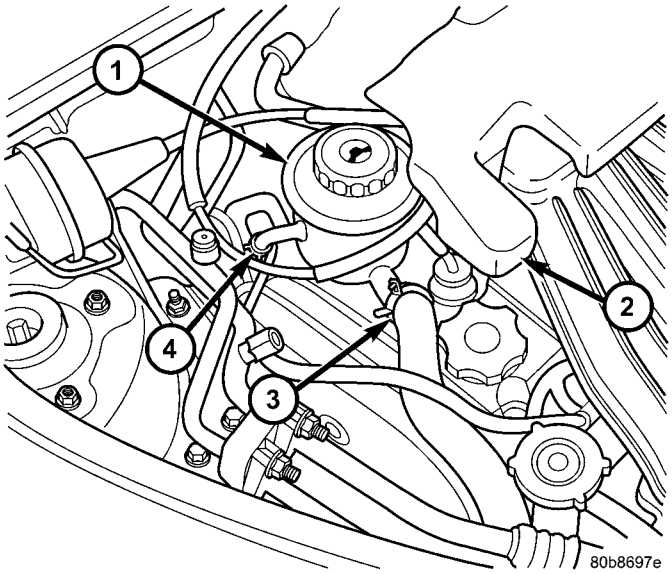

Fig. 50 Hose Connection At Reservoir

1 - POWER STEERING FLUID RESERVOIR
2 - ENGINE COVER
3 - SUPPLY HOSE
4 - RETURN HOSE

HOSE - POWER STEERING RETURN (Continued)

REMOVAL - 2.4L TURBO

NOTE: Before proceeding, (Refer to 19 - STEERING - WARNING).

(1) Siphon as much fluid as possible from power steering fluid reservoir.
(2) Raise vehicle. (Refer to LUBRICATION & MAINTENANCE/HOISTING - STANDARD PROCEDURE)
(3) Remove hose clamp securing return hose (to reservoir) to fitting on internal cooler located within radiator portion of cooling module (Fig. 46). Slide hose off fitting and allow fluid to drain.
(4) Lower vehicle.
(5) Remove grille from front of vehicle (Fig. 40).
(6) Remove hood-opening weather-strip from across radiator closure panel.
(7) Remove ambient temperature sensors from radiator closure panel (Fig. 41).
(8) Remove fasteners securing upper radiator closure panel in place (Fig. 42), then remove the panel and lay it out of way.
(9) Remove clamp securing fluid return hose to pump reservoir (Fig. 44).
(10) Slide fluid return hose off end of reservoir fitting and remove from vehicle.

REMOVAL - 2.2L DIESEL

NOTE: Before proceeding, (Refer to 19 - STEERING - WARNING).

(1) Siphon as much fluid as possible from power steering fluid reservoir.
(2) Raise vehicle. (Refer to LUBRICATION & MAINTENANCE/HOISTING - STANDARD PROCEDURE)
(3) Remove clamp securing return hose to steering gear fitting and remove hose (Fig. 35). Drain fluid from hose.
(4) Lower vehicle.
(5) Remove engine air cleaner. (Refer to 9 - ENGINE/AIR INTAKE SYSTEM/AIR CLEANER HOUSING - REMOVAL)
(6) Remove return hose from routing clip (Fig. 51).
(7) Remove clamp securing return hose to fluid reservoir fitting (Fig. 51) and remove hose.

INSTALLATION

INSTALLATION - 2.0L/2.4L ENGINE

(1) Slide a hose clamp onto the power steering fluid reservoir end of the hose far enough to clear the molded fitting on the reservoir once the hose is installed.

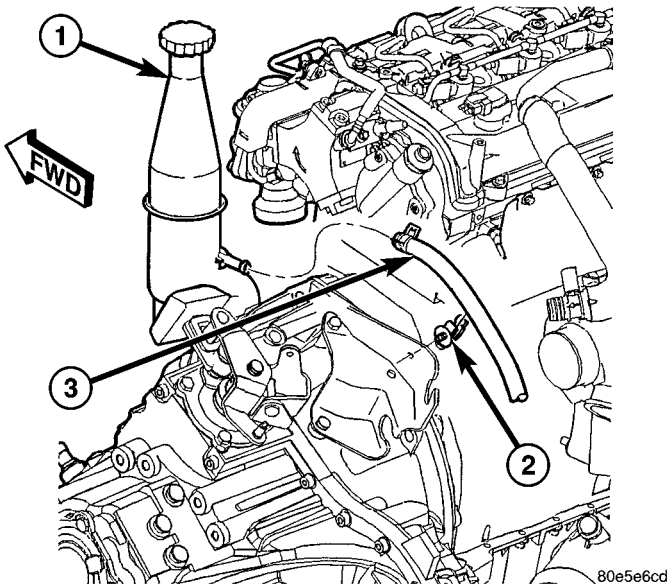

Fig. 51 Return Hose Mounting

1 - FLUID RESERVOIR
2 - ROUTING CLIP
3 - RETURN HOSE

(2) Install the power steering return hose into the engine compartment from the top. First, place the reservoir end of the hose onto the molded fitting on the power steering fluid reservoir, then route the rest of the hose down the rear of the engine (Fig. 50).
(3) Expand the hose clamp and slide it onto the fluid reservoir fitting. Secure the clamp once it is past the bead formed into the fluid reservoir fitting.
(4) Raise the vehicle.

CAUTION: The power steering fluid hoses must remain away from the exhaust system, vehicle components, and unfriendly surfaces that can cause possible damage to the power steering hoses.

(5) Using a lint free towel, wipe clean the open power steering hose end and the power steering fluid cooler tube.
(6) Install a hose clamp onto the end of the hose far enough to clear the fitting on the steering gear or cooler once the hose is installed.
(7) Slide the hose onto the end of the cooler tube (Fig. 49) (Fig. 26). Install the hose clamp past the bead formed into the end of the cooler tube and secure in place.
(8) Lower the vehicle.
(9) Perform the POWER STEERING PUMP INITIAL OPERATION procedure. (Refer to 19 - STEERING/PUMP - STANDARD PROCEDURE)
(10) Check for leaks at all hose connections.

HOSE - POWER STEERING RETURN (Continued)

INSTALLATION - 2.4L TURBO

(1) Slide hose clamp onto power steering fluid reservoir end of return hose far enough to clear molded fitting on reservoir once hose is installed.

(2) Install power steering return hose into engine compartment from top. Place reservoir end of hose onto molded fitting on fluid reservoir (Fig. 44).

(3) Expand hose clamp and slide it onto fluid reservoir fitting. Secure clamp once it is past bead formed into fluid reservoir fitting.

(4) Install radiator closure panel and fasten it in place (Fig. 42).

(5) Install ambient temperature sensors on radiator closure panel (Fig. 41).

(6) Install hood-opening weather-strip across radiator closure panel.

(7) Install grille on front of vehicle (Fig. 40).

(8) Raise vehicle.

(9) Position hose clamp onto end of return hose (to reservoir) far enough to clear fitting on internal cooler located within radiator portion of cooling module.

(10) Slide return hose onto internal cooler fitting (Fig. 46). Install hose clamp on hose past bead formed into end of fitting and secure in place.

(11) Lower vehicle.

(12) Perform POWER STEERING PUMP INITIAL OPERATION procedure. (Refer to 19 - STEERING/ PUMP - STANDARD PROCEDURE)

(13) Check for leaks.

INSTALLATION - 2.2L DIESEL

(1) Slide hose clamp onto power steering fluid reservoir end of return hose far enough to clear molded fitting on reservoir once hose is installed.

(2) Install return hose into engine compartment from top. First, place reservoir end of hose onto molded fitting on reservoir, then route remainder of hose down rear of transaxle (Fig. 51).

(3) Expand hose clamp and slide it onto fluid reservoir fitting. Secure clamp once it is past bead formed into fluid reservoir fitting.

(4) Install return hose into routing clip (Fig. 51).

(5) Raise vehicle.

CAUTION: Power steering fluid hoses must remain away from exhaust system, vehicle components, and unfriendly surfaces that can cause possible damage to power steering hoses.

(6) Using lint free towel, wipe clean open power steering hose end and power steering gear hose fitting.

(7) Install hose clamp onto the end of the hose far enough to clear fitting on the steering gear once hose is installed.

(8) Slide hose onto end of the steering gear hose fitting (Fig. 35). Install hose clamp past bead formed into end of hose fitting and secure in place.

(9) Lower vehicle.

(10) Install engine air cleaner. (Refer to 9 - ENGINE/AIR INTAKE SYSTEM/AIR CLEANER HOUSING - INSTALLATION)

(11) Perform POWER STEERING PUMP INITIAL OPERATION procedure. (Refer to 19 - STEERING/ PUMP - STANDARD PROCEDURE)

(12) Check for leaks at all hose connections.

HOSE - POWER STEERING SUPPLY

REMOVAL

REMOVAL - 2.0L/2.4L ENGINE

NOTE: Before proceeding, (Refer to 19 - STEERING - WARNING).

(1) Siphon as much fluid as possible from the power steering fluid reservoir.

(2) Remove the grille from the front of the vehicle (Fig. 52).

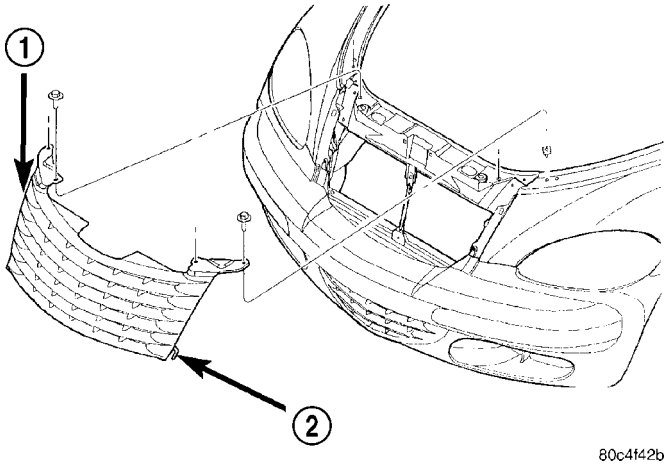

Fig. 52 Grille Attachment

1 - GRILLE
2 - RETAINER

(3) Remove the hood-opening weather-strip from across the radiator closure panel.

HOSE - POWER STEERING SUPPLY (Continued)

(4) Remove the ambient temperature sensor from the radiator closure panel (Fig. 53).

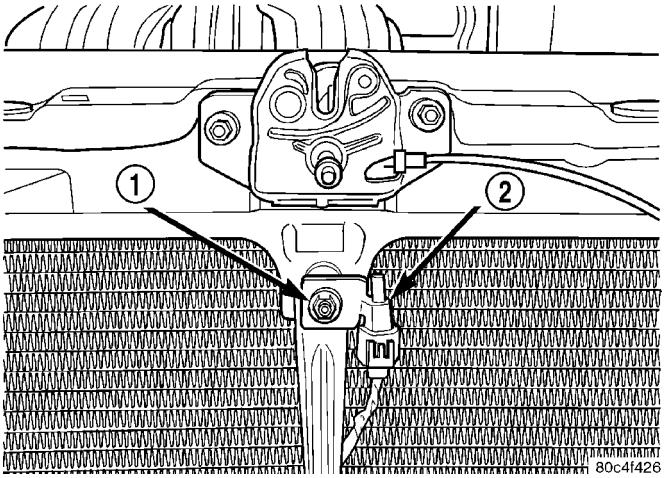

Fig. 53 Ambient Temperature Sensor

1 - FASTENER
2 - SENSOR

(5) Remove the fasteners securing the radiator closure panel in place (Fig. 54), then remove the panel.

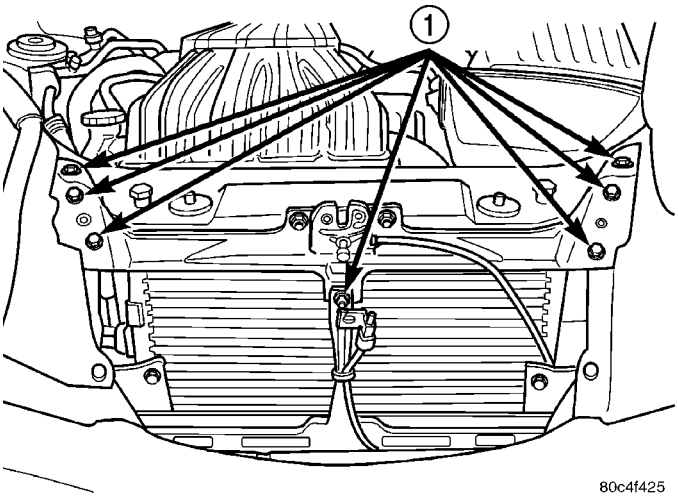

Fig. 54 Radiator Closure Panel

1 - FASTENERS

(6) Remove the clamp securing the supply hose to the power steering pump supply fitting (Fig. 55), then remove the hose from the supply fitting.

(7) Remove the hose clamp securing the supply hose to the power steering fluid reservoir (Fig. 56). Slide the hose off the end of the reservoir fitting and remove from vehicle.

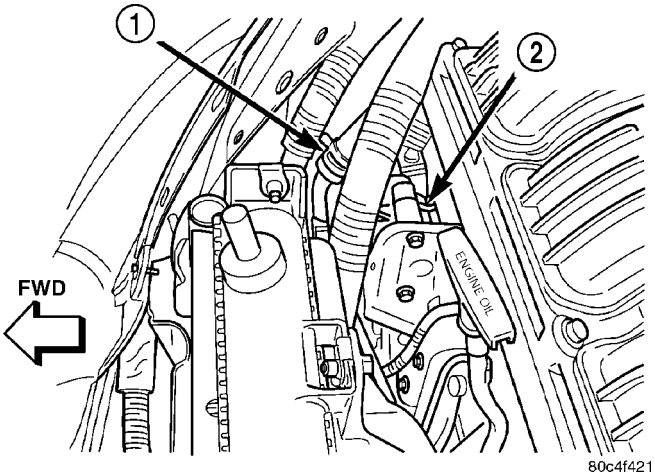

Fig. 55 Supply Hose At Pump

1 - SUPPLY HOSE CLAMP
2 - POWER STEERING PUMP

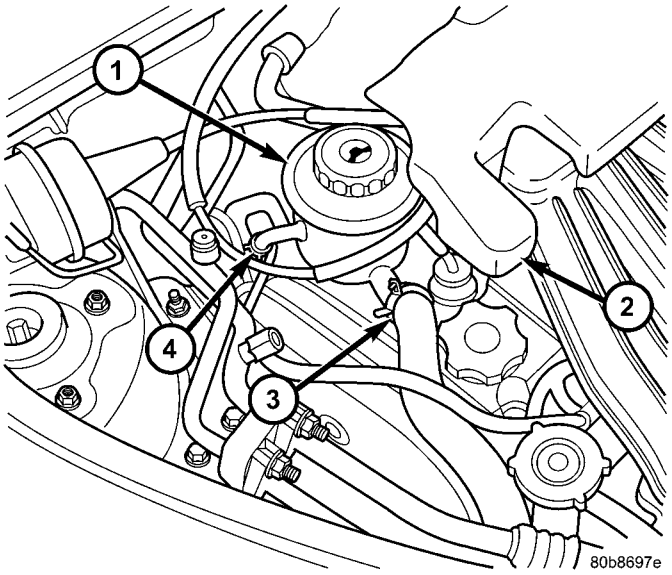

Fig. 56 Hose Connection At Reservoir

1 - POWER STEERING FLUID RESERVOIR
2 - ENGINE COVER
3 - SUPPLY HOSE
4 - RETURN HOSE

REMOVAL - 2.2L DIESEL

NOTE: Before proceeding, (Refer to 19 - STEERING - WARNING).

(1) Disconnect battery negative (-) terminal.

(2) Remove engine top appearance cover (Fig. 57).

(3) Siphon as much fluid as possible from power steering fluid reservoir.

(4) Remove radiator fan. (Refer to 7 - COOLING/ENGINE/RADIATOR FAN - REMOVAL)

HOSE - POWER STEERING SUPPLY (Continued)

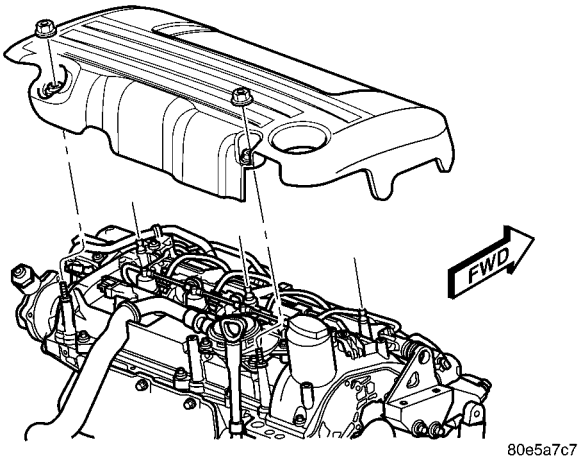

Fig. 57 Engine Top Cover Mounting

(5) Remove clamp securing supply hose to power steering pump supply fitting (Fig. 58), then remove hose from fitting.

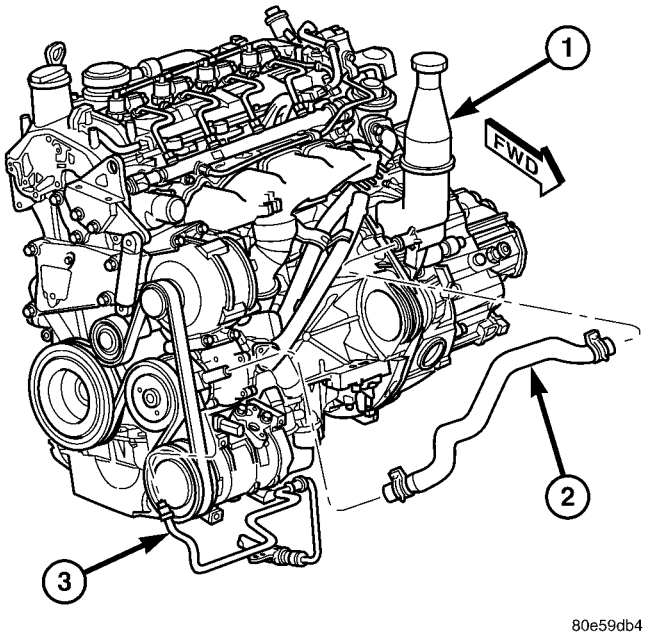

Fig. 58 Hoses At Pump And Reservoir

1 - FLUID RESERVOIR
2 - SUPPLY HOSE
3 - PRESSURE HOSE

(6) Remove hose clamp securing supply hose to power steering fluid reservoir (Fig. 58). Slide the hose off the end of the reservoir fitting and remove from vehicle.

INSTALLATION

INSTALLATION - 2.0L/2.4L ENGINE

(1) Slide hose clamps onto both ends of the power steering fluid supply hose far enough to clear the fittings on the reservoir and pump once the hose is installed.

(2) Install the power steering supply hose into the engine compartment. First, route the pump end of the hose down to the pump supply fitting, then place the reservoir end of the hose onto the fitting of the power steering fluid reservoir (Fig. 56).

(3) Expand the hose clamp at the fluid reservoir and slide it over the hose and fitting. Secure the clamp once it is past the bead formed into the fluid reservoir fitting.

(4) Expand the remaining hose clamp and slide it over the hose and pump supply fitting (Fig. 55). Secure the clamp once it is past the bead formed into the fluid supply fitting.

CAUTION: Make sure the hose routing is above the engine timing chain cover. The power steering fluid supply hose must remain clear of any unfriendly surface that can cause possible damage to it.

(5) Install the radiator closure panel and fasten it in place (Fig. 54).

(6) Install the ambient temperature sensor on the radiator closure panel (Fig. 53).

(7) Install the hood-opening weather-strip across the radiator closure panel.

(8) Install the grille on the front of the vehicle (Fig. 52).

(9) Perform the POWER STEERING PUMP INITIAL OPERATION procedure. (Refer to 19 - STEERING/PUMP - STANDARD PROCEDURE)

(10) Check for leaks at all hose connections.

INSTALLATION - 2.2L DIESEL

(1) Slide hose clamps onto both ends of power steering fluid supply hose far enough to clear fittings on reservoir and pump once hose is installed.

(2) Install power steering supply hose into engine compartment. First, route pump end of hose down to pump onto supply fitting, then place reservoir end of hose onto fitting of power steering fluid reservoir (Fig. 58).

(3) Expand hose clamp at fluid reservoir end and slide it over hose and fitting. Secure clamp once it is past bead formed into fluid reservoir fitting.

(4) Expand remaining hose clamp and slide it over hose and pump supply fitting (Fig. 58). Secure clamp once it is past bead formed into fluid supply fitting.

(5) Install radiator fan. (Refer to 7 - COOLING/ENGINE/RADIATOR FAN - INSTALLATION)

HOSE - POWER STEERING SUPPLY (Continued)

(6) Install engine top appearance cover (Fig. 57).

(7) Perform POWER STEERING PUMP INITIAL OPERATION procedure. (Refer to 19 - STEERING/ PUMP - STANDARD PROCEDURE)

(8) Check for leaks at all hose connections.

PULLEY

REMOVAL - 2.2L DIESEL

NOTE: Before proceeding, (Refer to 19 - STEERING - WARNING).

(1) Raise vehicle. (Refer to LUBRICATION & MAINTENANCE/HOISTING - STANDARD PROCEDURE)

(2) Remove lower engine compartment silencer assembly and accessory drive belt splash shield (Fig. 59).

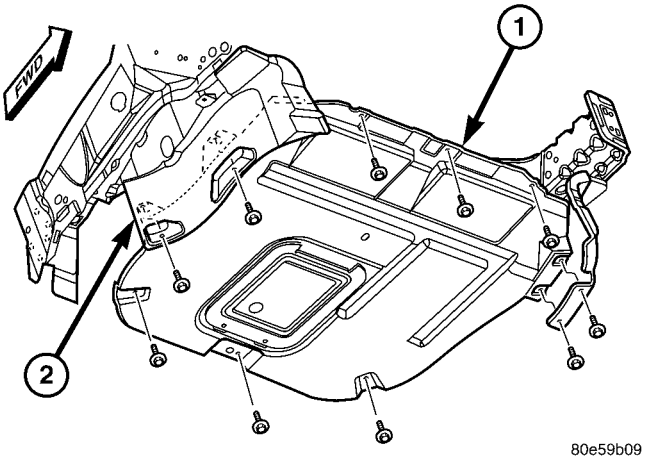

Fig. 59 Engine Compartment Lower Silencer

1 - ENGINE COMPARTMENT SILENCER
2 - ACCESSORY DRIVE BELT SPLASH SHIELD

(3) Remove accessory drive belt (Refer to 7 - COOLING/ACCESSORY DRIVE/DRIVE BELT - REMOVAL).

(4) Remove 3 bolts securing pulley to power steering pump (Fig. 60). Remove pulley.

INSTALLATION - 2.2L DIESEL

(1) Install pump drive pulley (Fig. 60). Tighten three mounting bolts to a torque of 28 N·m (21 ft. lbs.).

(2) Install accessory drive belt. (Refer to 7 - COOLING/ACCESSORY DRIVE/DRIVE BELT - INSTALLATION)

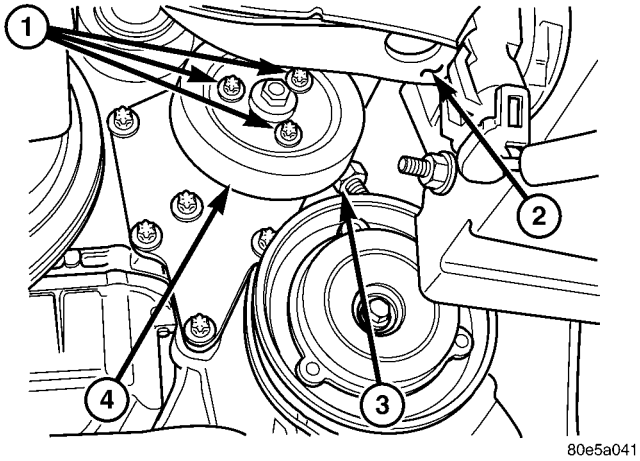

Fig. 60 Pump Pulley Mounting

1 - PULLEY MOUNTING BOLTS
2 - RIGHT FRAME RAIL
3 - PRESSURE HOSE FITTING
4 - PULLEY

(3) Install lower engine compartment silencer assembly and drive belt splash shield (Fig. 59).

(4) Lower vehicle.

RESERVOIR

DESCRIPTION

The power steering reservoir used on 1.6L engines is mounted above the generator (Fig. 61). The power steering fluid reservoir for 2.0L and 2.4L non-turbo engines is mounted above the engine head cover and is attached to the backside of the engine (Fig. 62). The 2.2L Diesel uses a power steering reservoir that is mounted above the transaxle bell housing (Fig. 64).

The 2.4L turbo engine uses a power steering reservoir that is attached to the power steering pump. The reservoir is serviced with the pump.

REMOVAL

REMOVAL - 1.6L ENGINE

(1) Remove the filler cap from remote power steering fluid reservoir.

(2) Siphon as much fluid as possible from the fluid reservoir.

(3) Remove the clamp attaching the return hose to the power steering fluid reservoir. Disconnect hose from reservoir (Fig. 61).

RESERVOIR (Continued)

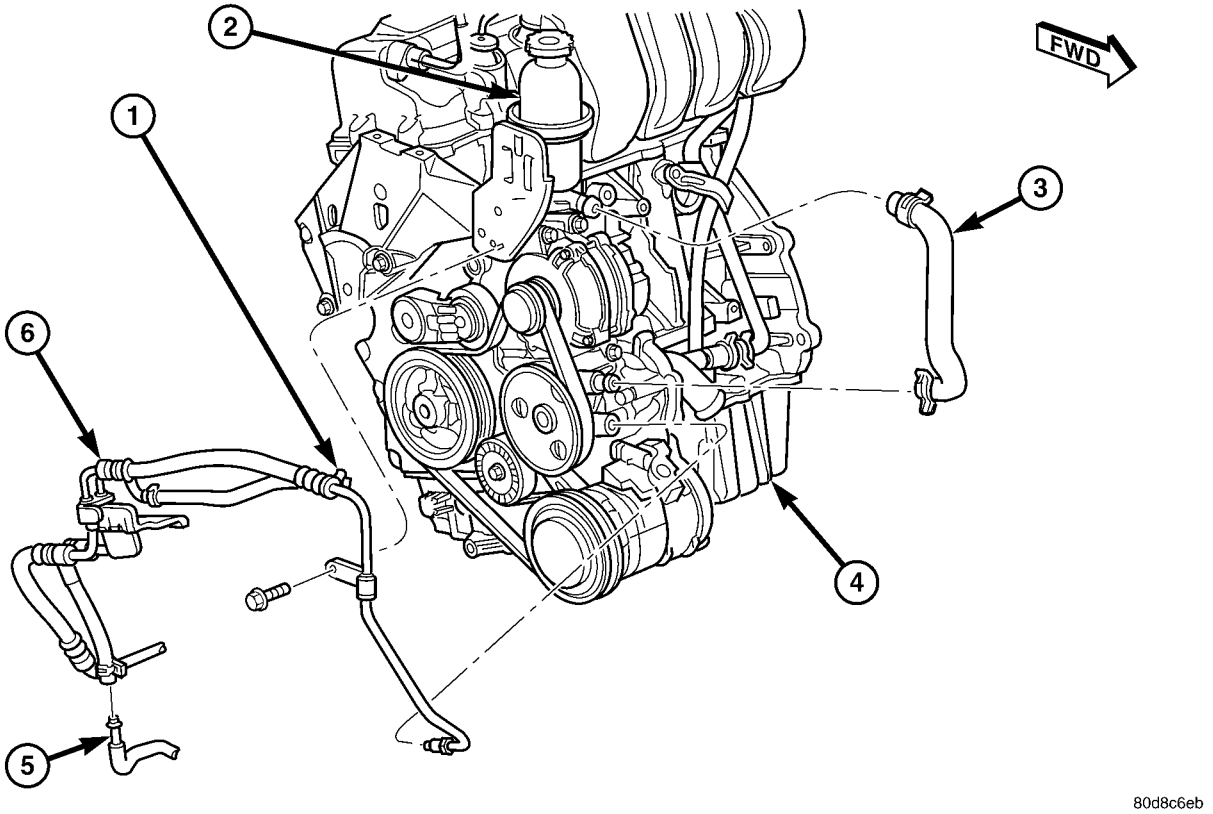

Fig. 61 Hoses, Reservoir And Pump - 1.6L Engine

1 - RETURN HOSE
2 - FLUID RESERVOIR
3 - SUPPLY HOSE
4 - 1.6L ENGINE
5 - COOLER OUTLET TUBE
6 - PRESSURE HOSE

(4) Remove the clamp attaching the supply hose to the power steering fluid reservoir. Disconnect hose from reservoir (Fig. 61).

(5) Press the tang on the reservoir mounting bracket retaining the reservoir to the bracket, then pull upward on reservoir and remove it from the bracket.

REMOVAL - 2.0L/2.4L ENGINE

NOTE: Before proceeding, (Refer to 19 - STEERING - WARNING).

(1) Remove the filler cap from remote power steering fluid reservoir (Fig. 62).

(2) Siphon as much fluid as possible from the fluid reservoir.

(3) Remove the plastic engine cover.

(4) Remove the clamp attaching the supply hose to the power steering fluid reservoir (Fig. 62). Remove the hose from the reservoir.

(5) Remove the clamp attaching the return hose to the power steering fluid reservoir (Fig. 62). Remove the hose from the reservoir.

(6) Remove the 2 bolts fastening the reservoir to the rear of the engine (Fig. 63)

REMOVAL - 2.2L DIESEL

NOTE: Before proceeding, (Refer to 19 - STEERING - WARNING).

(1) Remove engine top appearance cover (Fig. 57).

(2) Remove engine air cleaner. (Refer to 9 - ENGINE/AIR INTAKE SYSTEM/AIR CLEANER HOUSING - REMOVAL)

(3) Siphon as much fluid as possible from power steering fluid reservoir.

(4) Remove hose clamp securing return hose to fluid reservoir fitting (Fig. 51). Slide hose off end of reservoir fitting.

(5) Remove hose clamp securing supply hose to fluid reservoir fitting (Fig. 58). Slide hose off end of reservoir fitting.

RESERVOIR (Continued)

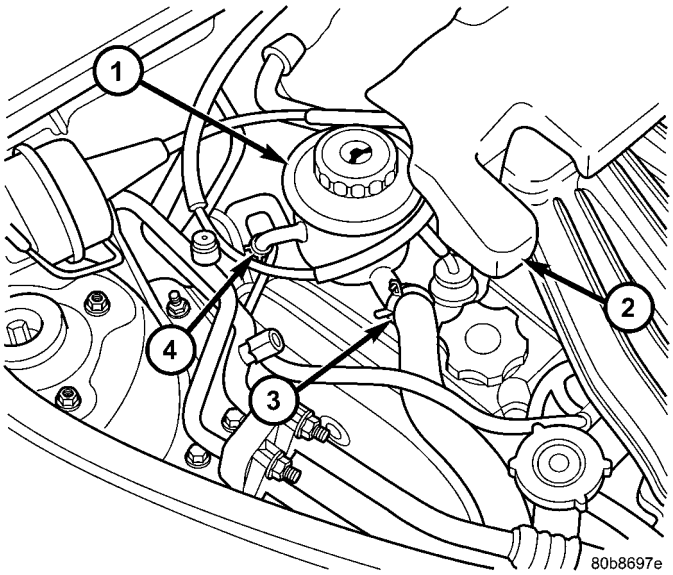

Fig. 62 Hose Connection At Reservoir

1 - POWER STEERING FLUID RESERVOIR
2 - ENGINE COVER
3 - SUPPLY HOSE
4 - RETURN HOSE

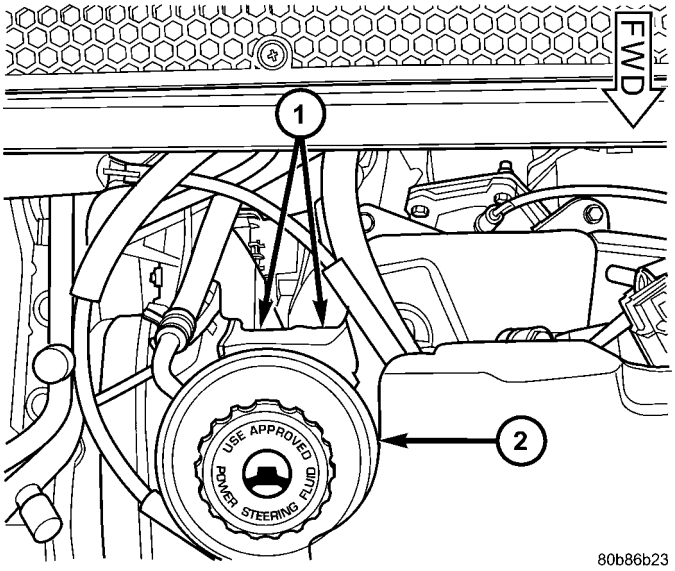

Fig. 63 Power Streering Fluid Reservoir Mounting

1 - MOUNTING BOLTS
2 - POWER STEERING FLUID RESERVOIR

(6) Remove mounting bolts used to secure reservoir in place (Fig. 64). Remove reservoir.

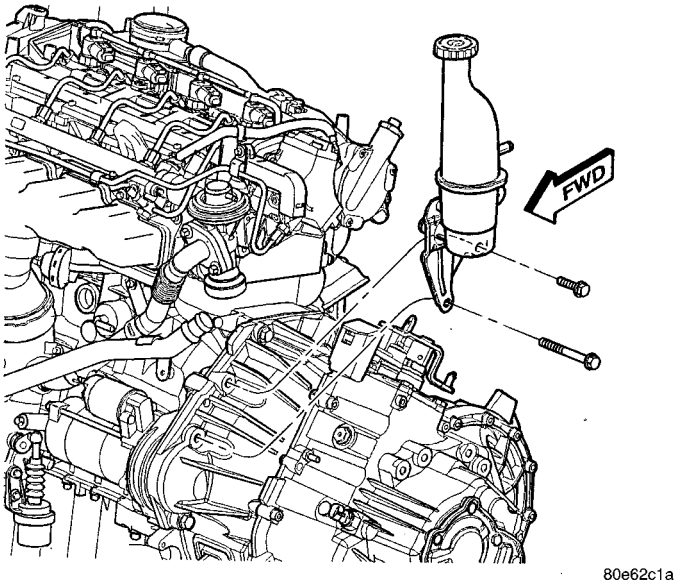

Fig. 64 Power Steering Fluid Reservoir Mounting

INSTALLATION

INSTALLATION - 1.6L ENGINE

(1) Align the guide on the rear of the reservoir with the mounting bracket and push reservoir downward until reservoir clicks into place in the bracket.

(2) Install the supply hose onto the bottom of the reservoir (Fig. 61). Slide the hose clamp into position on the fluid reservoir and attach it. **Be sure hose clamp in installed past bead on fluid reservoir fitting.**

(3) Install the return hose onto the reservoir (Fig. 61). Slide the hose clamp into position on the fluid reservoir and attach it. **Be sure hose clamp in installed past bead on fluid reservoir fitting.**

(4) Fill the fluid reservoir to the proper level. (Refer to 19 - STEERING/PUMP/FLUID - STANDARD PROCEDURE - POWER STEERING FLUID LEVEL CHECKING)

(5) Start the engine and let run for a few seconds, then turn the engine off.

(6) Add fluid as necessary.

(7) Install the filler cap.

INSTALLATION - 2.0L/2.4L ENGINE

(1) Install the power steering fluid reservoir bracket to the engine with mounting bolts (Fig. 63). Tighten bolts to 10 N·m (90 in.lb.).

RESERVOIR (Continued)

NOTE: Make sure the throttle cable is routed in front of the reservoir just below the upper lip.

(2) Install the fluid supply hose onto the power steering fluid reservoir fitting (Fig. 62).

(3) Slide the hose clamp on the fluid supply hose up into position on the fluid reservoir and install it. Be sure hose clamp in installed past bead on fluid reservoir fitting.

CAUTION: Make sure the supply hose is routed above the engine timing chain cover but below engine wiring harness. The power steering fluid supply hose must remain clear of any unfriendly surface that can cause possible damage to it.

(4) Install the fluid return hose onto the power steering fluid reservoir fitting (Fig. 62).

(5) Slide the hose clamp on the fluid supply hose up into position on the fluid reservoir and install it. Be sure hose clamp in installed past bead on fluid reservoir fitting.

(6) Install plastic engine cover.

(7) Fill the fluid reservoir to the proper level. (Refer to 19 - STEERING/PUMP/FLUID - STANDARD PROCEDURE - POWER STEERING FLUID LEVEL CHECKING)

(8) Start the engine and let run for a few seconds, then turn the engine off.

(9) Add fluid if necessary.

(10) Install the filler cap.

INSTALLATION - 2.2L DIESEL

(1) Attach reservoir to vehicle using 2 mounting bolts (Fig. 64). Tighten mounting bolts to a torque of 54 N·m (40 ft. lbs.).

(2) Slide supply hose onto reservoir fitting (Fig. 58). Expand hose clamp and slide it over hose on reservoir fitting. Secure clamp once it is past bead formed into fluid reservoir fitting.

(3) Slide return hose onto reservoir fitting (Fig. 51). Expand hose clamp and slide it over hose on reservoir fitting. Secure clamp once it is past bead formed into fluid reservoir fitting.

(4) Install engine air cleaner. (Refer to 9 - ENGINE/AIR INTAKE SYSTEM/AIR CLEANER HOUSING - INSTALLATION)

(5) Install engine top appearance cover (Fig. 57).

(6) Fill fluid reservoir to proper level. (Refer to 19 - STEERING/PUMP/FLUID - STANDARD PROCEDURE - POWER STEERING FLUID LEVEL CHECKING)

(7) Start engine and let run for a few seconds, then turn engine off.

(8) Add fluid if necessary.

(9) Install reservoir filler cap.

TRANSAXLE

TABLE OF CONTENTS

	page
G288 MANUAL TRANSAXLE	1
T350 MANUAL TRANSAXLE	94
41TE AUTOMATIC TRANSAXLE	150

G288 MANUAL TRANSAXLE

TABLE OF CONTENTS

	page
G288 MANUAL TRANSAXLE	
DESCRIPTION	2
OPERATION	5
REMOVAL	
REMOVAL—2.2L TURBO DIESEL	13
REMOVAL—2.4L TURBO	17
DISASSEMBLY	22
ASSEMBLY	27
INSTALLATION	
INSTALLATION—2.2L TURBO DIESEL	34
INSTALLATION—2.4L TURBO	38
SPECIFICATIONS	43
SPECIAL TOOLS	44
AXLE SEAL	
REMOVAL	48
INSTALLATION	48
BACKUP LAMP SWITCH	
REMOVAL	48
INSTALLATION	49
CLUTCH BELLHOUSING	
DISASSEMBLY	49
ASSEMBLY	51
DETENT PLUG	
DESCRIPTION	53
REMOVAL	55
INSTALLATION	55
DIFFERENTIAL	
DESCRIPTION	56
OPERATION	56
REMOVAL	56
DISASSEMBLY	56
ASSEMBLY	57
INSTALLATION	57
FLUID	
STANDARD PROCEDURE	
STANDARD PROCEDURE - FLUID LEVEL CHECKING	58
STANDARD PROCEDURE - FLUID DRAIN AND FILL	58
GEAR SHIFT BOOT	
REMOVAL	59
INSTALLATION	59
GEAR SHIFT CABLE	
REMOVAL	59
INSTALLATION	63
ADJUSTMENTS	
ADJUSTMENT - GEARSHIFT CROSSOVER CABLE	66
GEAR SHIFT KNOB	
REMOVAL	66
INSTALLATION	66
GEAR SHIFT MECHANISM	
REMOVAL	67
INSTALLATION	68
INPUT SHAFT	
DESCRIPTION	69
DISASSEMBLY	70
ASSEMBLY	72
OUTPUT SHAFT	
DESCRIPTION	77
DISASSEMBLY	78
ASSEMBLY	80
REVERSE SHAFT	
DESCRIPTION	85
DISASSEMBLY	86
ASSEMBLY	87
SYNCHRONIZER	
DESCRIPTION	90
REMOVAL	91
DISASSEMBLY	91
INSPECTION	91
ASSEMBLY	91
INSTALLATION	91
TRANSAXLE HOUSING	
DISASSEMBLY	92
ASSEMBLY	93

G288 MANUAL TRANSAXLE

DESCRIPTION

The Getrag 288 5-speed transaxle (Fig. 2) is a constant-mesh transaxle that is synchronized in all gear ranges.

The transaxle consists of four major sub-assemblies: the input shaft, output shaft, reverse shaft, and integral differential assembly. The transaxle is of a split-case design, utilizing a transaxle housing and clutch housing to contain as well as support the geartrain via a combination of roller and needle bearings.

The transaxle shift system consists of a mechanical shift mechanism, shift rails and forks, and gear shift cables. The unique design of this shift system provides a higher mechanical advantage, resulting in less friction and lower shift cable loads for smoother, more positive operation. The shift pattern is shown in (Fig. 1).

The Getrag 288 transaxle is available with the 2.2L Turbo Diesel and 2.4L Turbo Engine options. Its gear ratios are as follows:

GEAR	RATIO	
	2.2L DIESEL	2.4L TURBO
1st	4.25 : 1	3.92 : 1
2nd	2.35 : 1	2.21 : 1
3rd	1.46 : 1	1.46 : 1
4th	1.03 : 1	1.11 : 1
5th (Overdrive)	0.79 : 1	0.88 : 1
Reverse	3.81 : 1	3.62 : 1
Final Drive Ratio (FDR)	3.29 : 1	3.29 : 1

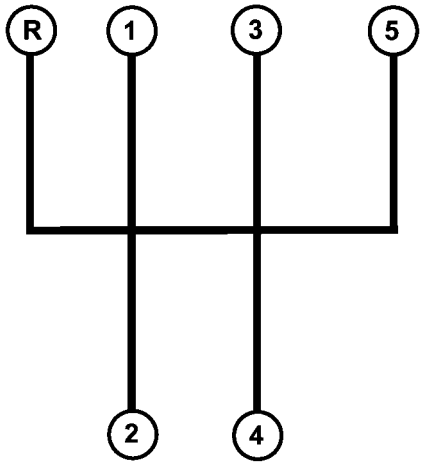

80eac37b

Fig. 1 Getrag 288 Gear Shift Pattern

G288 MANUAL TRANSAXLE (Continued)

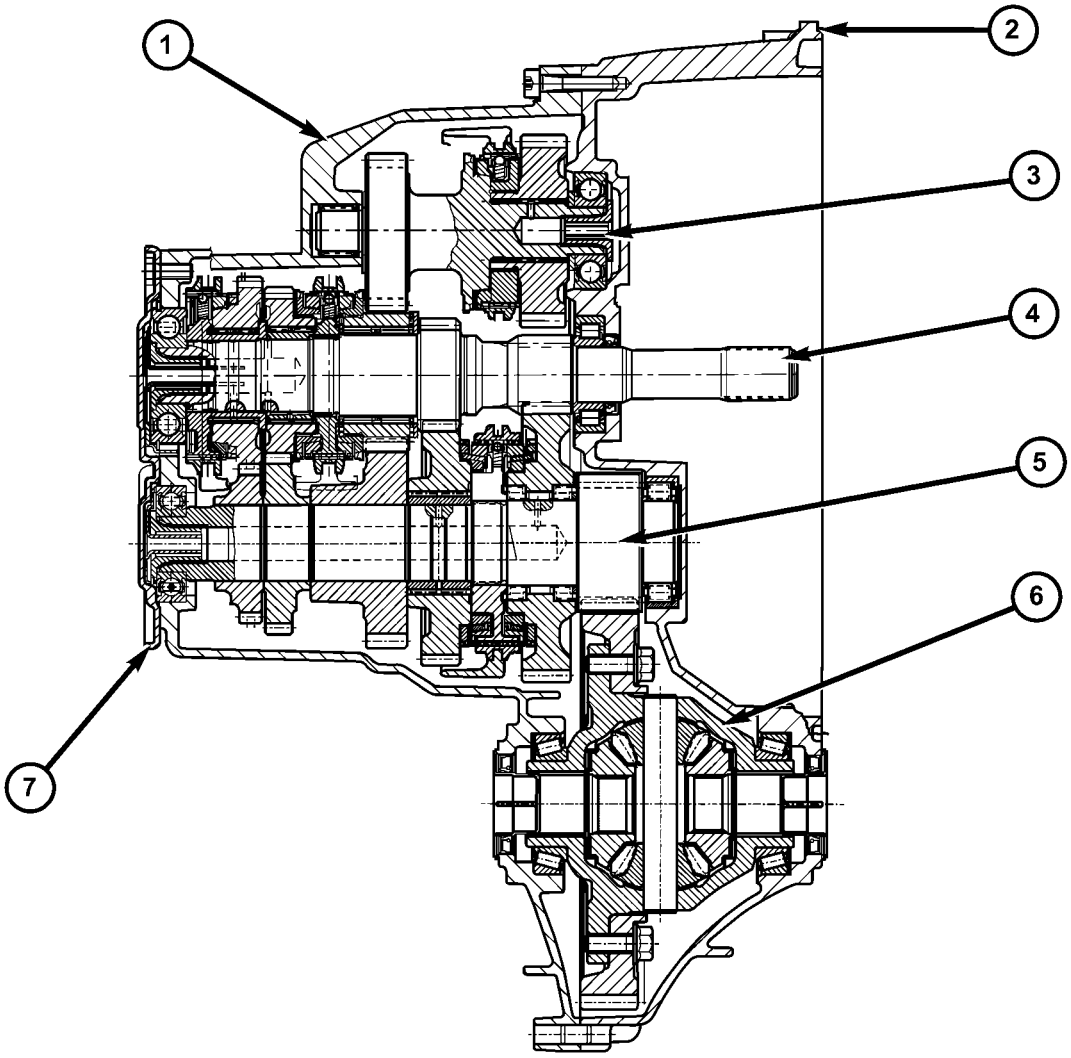

80e4a8f1

Fig. 2 Getrag 288 5-Speed Manual Transaxle

1 - TRANSAXLE HOUSING
2 - CLUTCH HOUSING
3 - REVERSE SHAFT
4 - INPUT SHAFT
5 - OUTPUT SHAFT
6 - DIFFERENTIAL ASSEMBLY
7 - END COVER

G288 MANUAL TRANSAXLE (Continued)

TRANSAXLE IDENTIFICATION

The transaxle identification label is found on clutch housing, near the differential cavity (Fig. 3). The label consists of the transaxle part number, as well a 12-digit engine identifier/build date code (Fig. 4). Digits 1-3 are the identifier (TCG = 2.2L Turbo Diesel — TBU = 2.4L Turbo). Digits 4-6 represent the day of year built. The 7th digit represents the calendar year of build, and the remaining 5 digits are the build sequence number. For example, a transaxle with the identifier “TCG114100003” is considered to be the 3rd transaxle built on the 114th day of the year 2001, and goes behind the 2.2L Turbo Diesel.

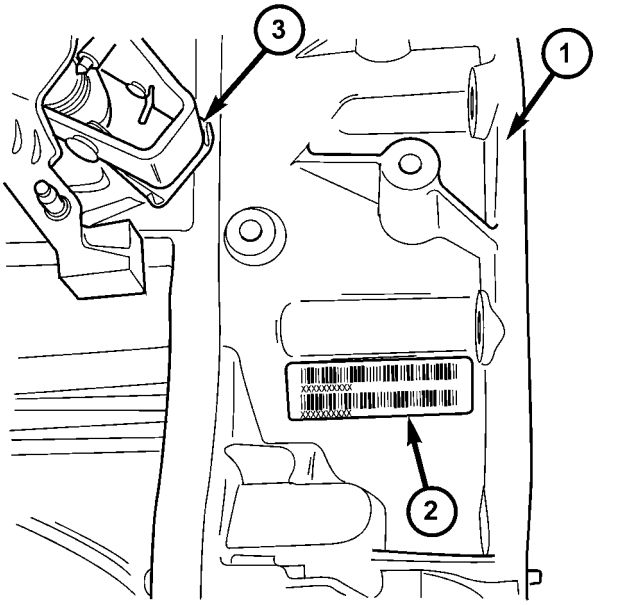

Fig. 3 Identification Label Location

1 - CLUTCH BELLHOUSING
2 - IDENTIFICATION LABEL
3 - SHIFT SHAFT ASSY.

Fig. 4 Identification Label Breakdown

1 - IDENTIFIER AND BUILD DATE CODE
2 - PART NUMBER

G288 MANUAL TRANSAXLE (Continued)

OPERATION

NEUTRAL

Engine power is transmitted to the input shaft via the clutch assembly and the input shaft turns. Since no synchronizers are engaged on either the input or output shafts, power is not transmitted to the output shaft and the differential does not turn (Fig. 5).

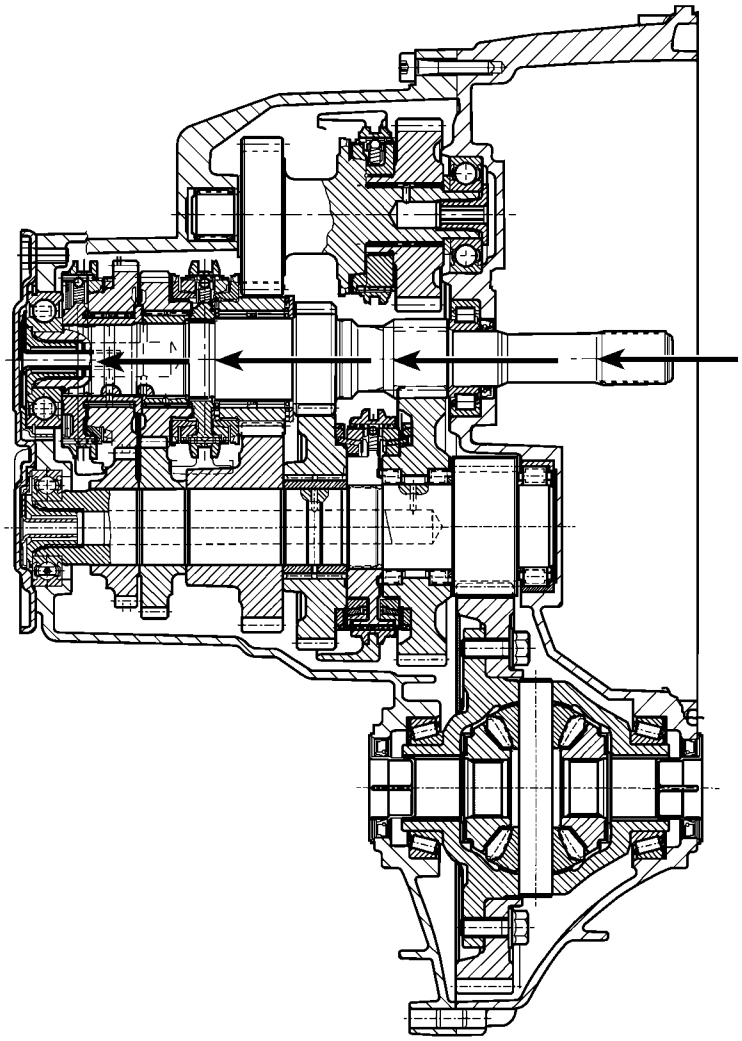

80e4caef

Fig. 5 Neutral Gear

G288 MANUAL TRANSAXLE (Continued)

FIRST GEAR

Engine power is transmitted to the input shaft via the clutch assembly and the input shaft turns. The input shaft first gear is integral to the input shaft, and is in constant mesh with the output shaft first speed gear. Because of this constant mesh, the output shaft first speed gear freewheels until first gear is selected. As the gearshift lever is moved into the first gear position, the 1-2 fork moves the 1-2 synchronizer sleeve towards the output shaft first gear. The synchronizer sleeve engages the first gear clutch teeth, fixing the gear to the output shaft, and allowing power to transmit through the output shaft to the differential (Fig. 6).

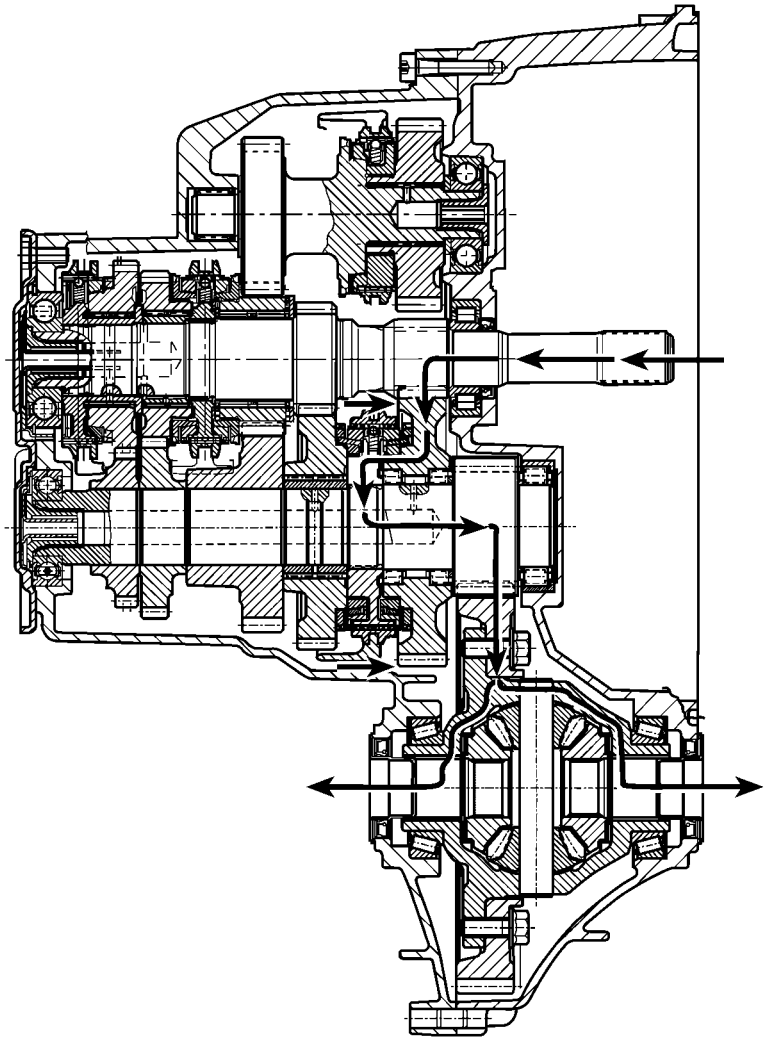

80e4caf8

Fig. 6 First Gear Powerflow

G288 MANUAL TRANSAXLE (Continued)

SECOND GEAR

Engine power is transmitted to the input shaft via the clutch assembly and the input shaft turns. The input shaft second gear is integral to the input shaft, and is in constant mesh with the output shaft second speed gear. Because of this constant mesh, the output shaft second speed gear freewheels until second gear is selected. As the gearshift lever is moved to the second gear position, the 1-2 fork moves the 1-2 synchronizer sleeve towards second gear on the output shaft. The synchronizer sleeve engages the second gear clutch teeth, fixing the gear to the output shaft, and allowing power to transmit through the output shaft to the differential (Fig. 7).

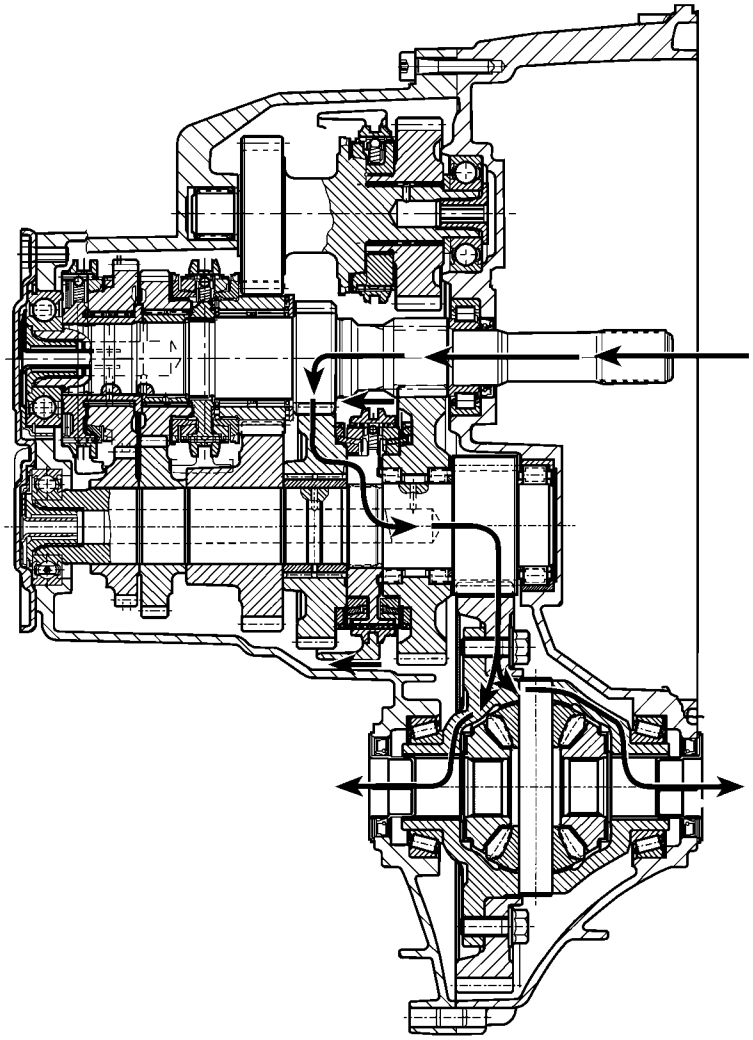

80e4cb0d

Fig. 7 Second Gear Powerflow

G288 MANUAL TRANSAXLE (Continued)

THIRD GEAR

Engine power is transmitted to the input shaft via the clutch assembly and the input shaft turns. The input shaft third speed gear is in constant mesh with the output shaft third gear, which is fixed to the output shaft. Because of this constant mesh, the input shaft third speed gear freewheels until third gear is selected. As the gearshift lever is moved to the third gear position, the 3-4 fork moves the 3-4 synchronizer sleeve towards third gear on the input shaft. The synchronizer sleeve engages the third gear clutch teeth, fixing the gear to the input shaft, and allowing power to transmit through the output shaft to the differential (Fig. 8).

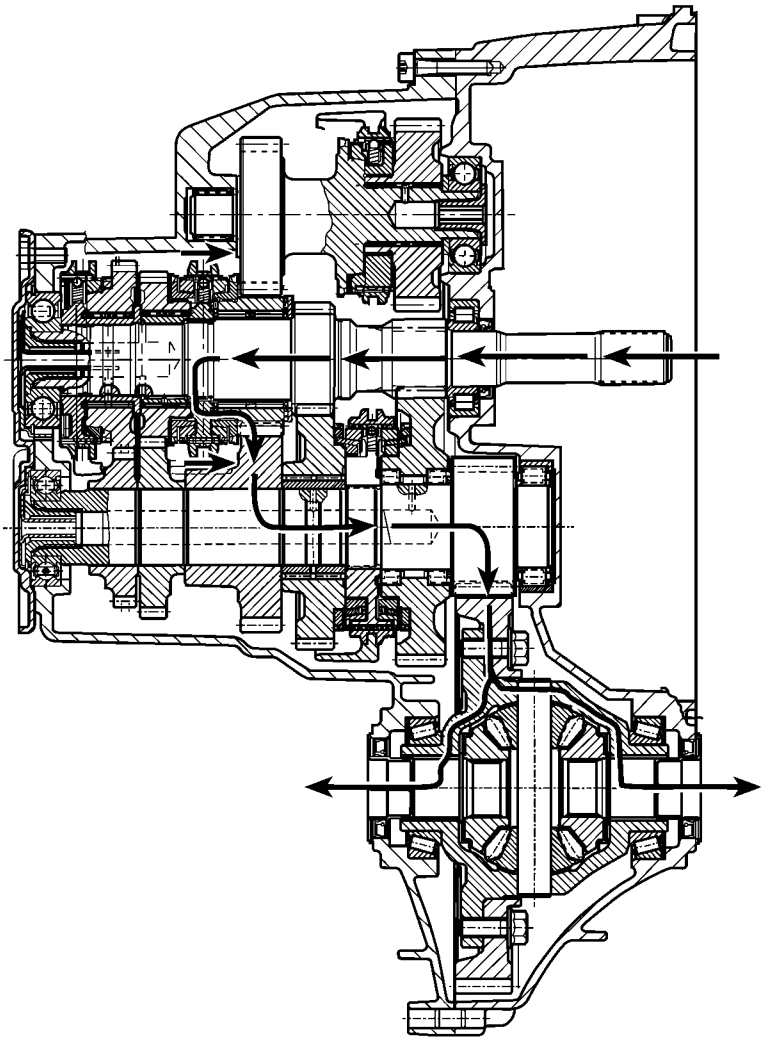

80e4cb29

Fig. 8 Third Gear Powerflow

G288 MANUAL TRANSAXLE (Continued)

FOURTH GEAR

Engine power is transmitted to the input shaft via the clutch assembly and the input shaft turns. The input shaft fourth speed gear is in constant mesh with the output shaft fourth gear, which is fixed to the output shaft. Because of this constant mesh, the input shaft fourth speed gear freewheels until fourth gear is selected. As the gearshift lever is moved to the fourth gear position, the 3-4 fork moves the 3-4 synchronizer sleeve towards fourth gear on the input shaft. The synchronizer sleeve engages the fourth gear clutch teeth, fixing the gear to the input shaft, and allowing power to transmit through the output shaft to the differential (Fig. 9).

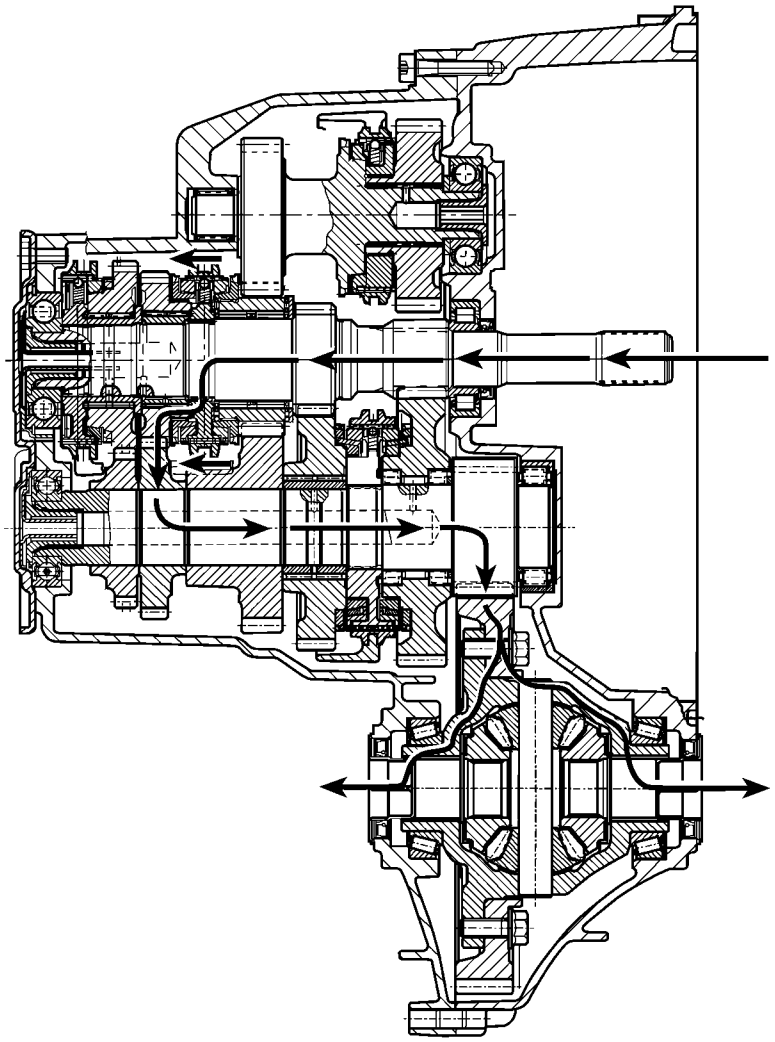

80e4cb5d

Fig. 9 Fourth Gear Powerflow

G288 MANUAL TRANSAXLE (Continued)

FIFTH GEAR

Engine power is transmitted to the input shaft via the clutch assembly and the input shaft turns. The input shaft fifth speed gear is in constant mesh with the output shaft fifth gear, which is fixed to the output shaft. Because of this constant mesh, the input shaft fifth speed gear freewheels until fifth gear is selected. As the gearshift lever is moved to the fifth gear position, the fifth gear fork moves the fifth gear synchronizer sleeve towards the input shaft fifth speed gear. The synchronizer sleeve engages the fifth gear clutch teeth, fixing the gear to the input shaft, and allowing power to transmit through the output shaft to the differential (Fig. 10).

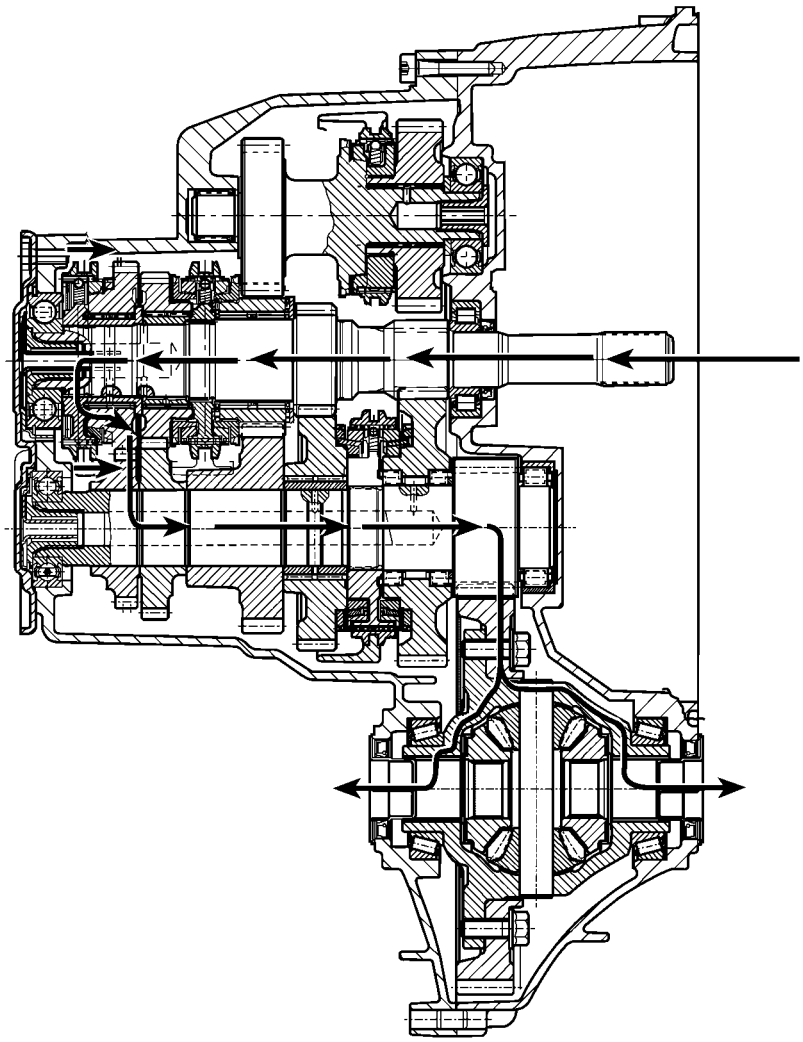

80e4cb75

Fig. 10 Fifth Gear (Overdrive) Powerflow

G288 MANUAL TRANSAXLE (Continued)

REVERSE GEAR

Engine power is transmitted to the input shaft via the clutch assembly and the input shaft turns. The input shaft fixed first gear is in constant mesh with the output shaft loose first gear, which is in constant mesh with the reverse shaft loose gear/synchro hub assembly. As reverse gear is selected, the reverse fork moves the reverse synchronizer towards the reverse shaft fixed gear. The synchronizer sleeve engages the reverse gear clutch teeth, locking the shaft into one rotating assembly. The reverse shaft fixed gear is in constant mesh with the input shaft third gear. The input shaft third gear, which is in constant mesh with the output shaft third gear, acts as an idler, which reverses output shaft direction, changing the output direction of the transaxle (Fig. 11) .

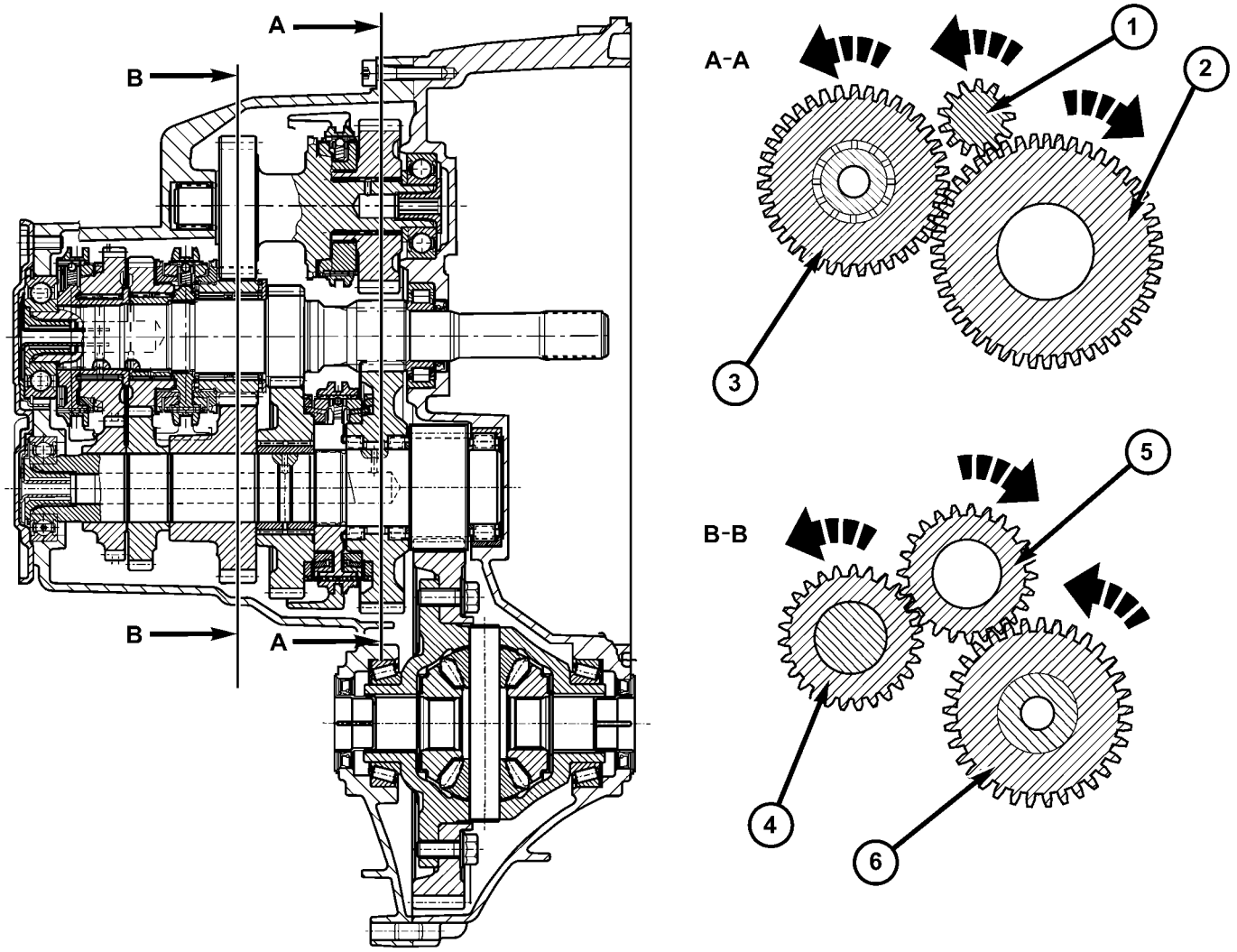

Fig. 11 Reverse Gear Powerflow

1 - INPUT SHAFT FIRST GEAR
2 - OUTPUT SHAFT FIRST GEAR
3 - REVERSE SHAFT GEAR/HUB ASSY
4 - REVERSE SHAFT FIXED GEAR
5 - INPUT SHAFT THIRD GEAR
6 - OUTPUT SHAFT THIRD GEAR

G288 MANUAL TRANSAXLE (Continued)

SHIFT SYSTEM

The 288 shift system is detailed in (Fig. 12). This system is of a conventional design, utilizing a centrally-located shift shaft assembly, which interfaces with shift rod/fork assemblies. The fork/rod assemblies operate synchronizer sleeves, selecting the desired gear position.

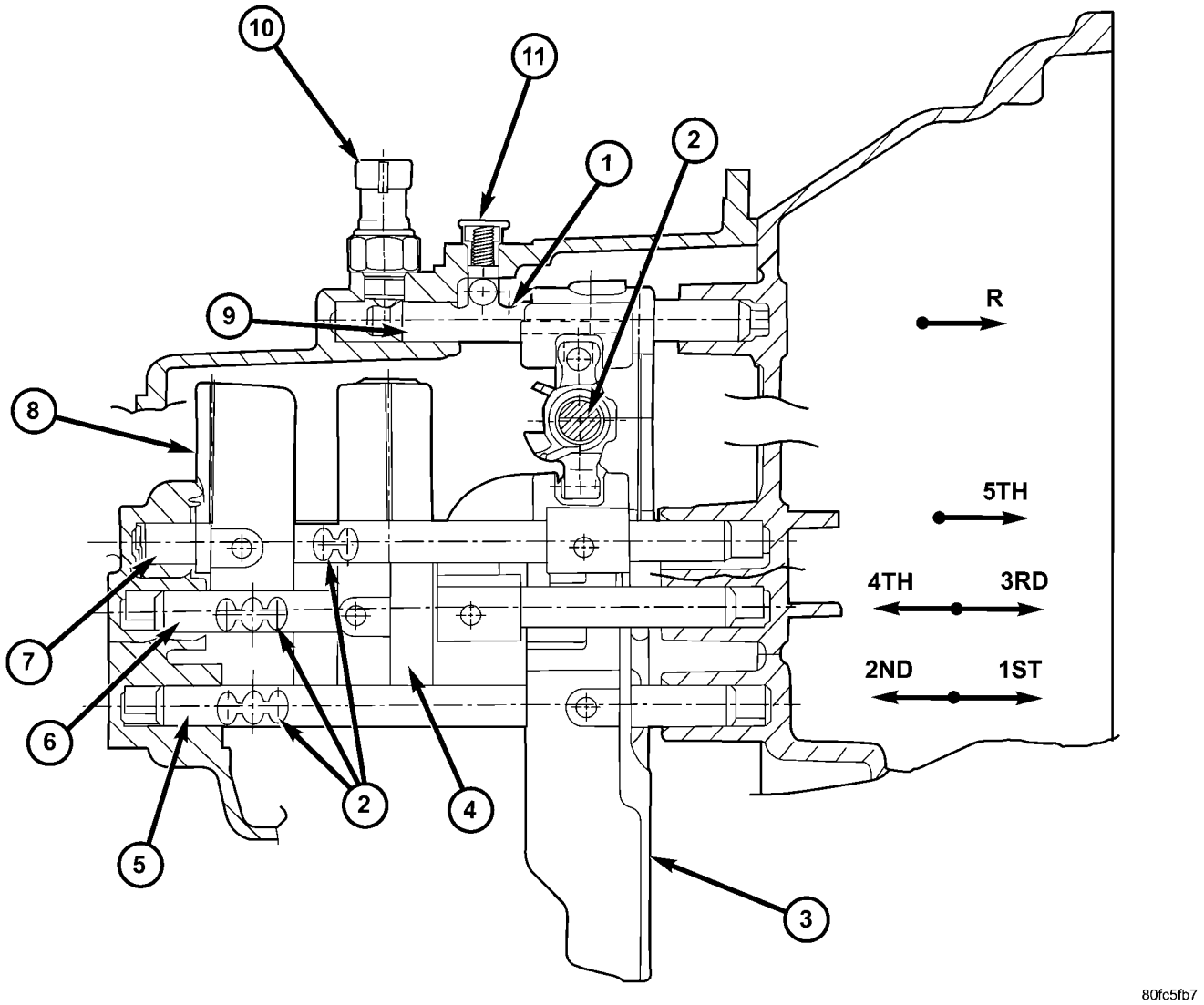

Fig. 12 G288 Transaxle Shift System

1 - RECESS
2 - SHIFT MECHANISM
3 - 1/2 FORK
4 - 3/4 FORK
5 - 1/2 SHIFT ROD
6 - 3/4 SHIFT ROD
7 - 5TH SHIFT ROD
8 - 5TH GEAR FORK
9 - REVERSE SHIFT ROD
10 - BACK-UP LAMP SWITCH
11 - DETENT PLUG

G288 MANUAL TRANSAXLE (Continued)

REMOVAL

REMOVAL—2.2L TURBO DIESEL

(1) Disconnect battery negative cable.
(2) Remove air cleaner assembly (Fig. 13).

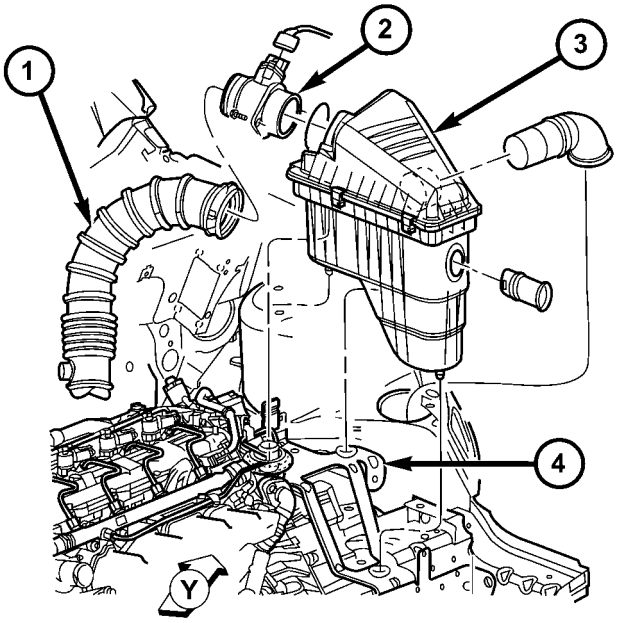

Fig. 13 Air Cleaner Assembly

1 - DUCT
2 - MASS AIR FLOW SENSOR
3 - AIR CLEANER ASSEMBLY
4 - BRACKET

(3) Remove Power Distribution Center (PDC) from bracket. Remove Air Cleaner/PDC mounting bracket (Fig. 14).

(4) Disconnect gearshift cables from shift mechanism and bracket (Fig. 15). Position cables out of way.

(5) Remove gearshift cable bracket (Fig. 15).

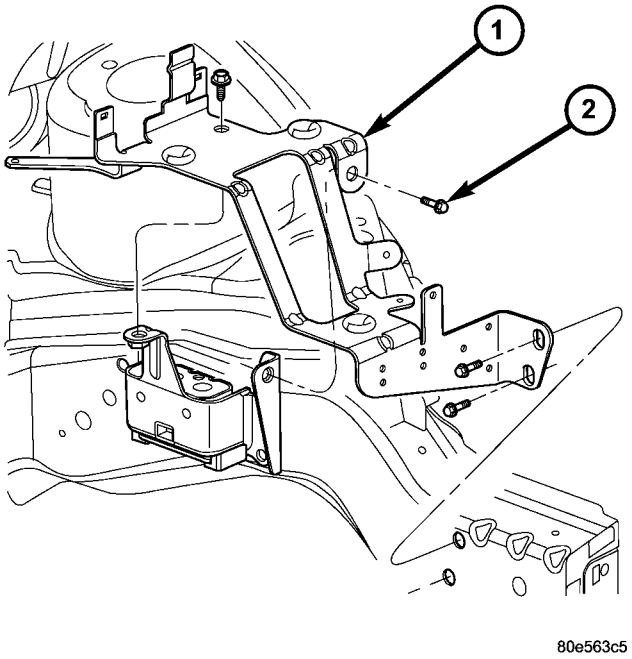

Fig. 14 Air Cleaner/PDC Bracket

1 - BRACKET
2 - BOLT (4)

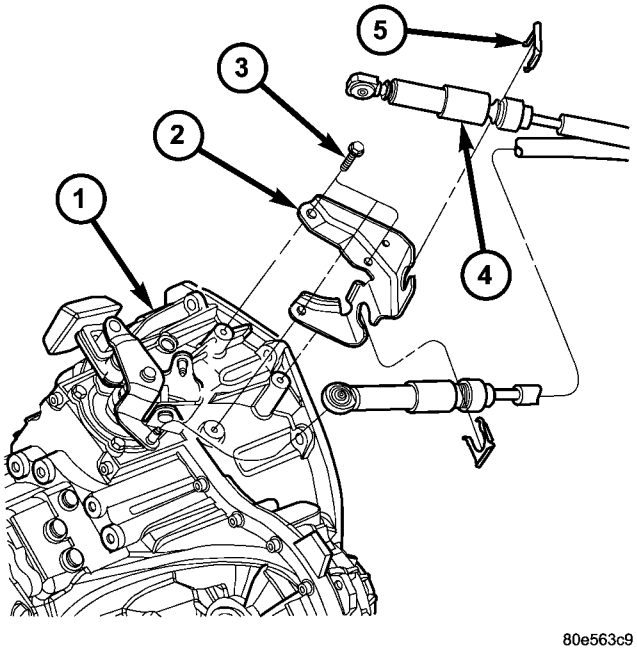

Fig. 15 Gear Shift Cables and Bracket at Transaxle

1 - TRANSAXLE
2 - GEAR SHIFT CABLE BRACKET
3 - BOLT (3)
4 - CABLE ASSEMBLY
5 - RETAINER (2)

G288 MANUAL TRANSAXLE (Continued)

(6) Remove power steering reservoir mounting bolts (Fig. 16).

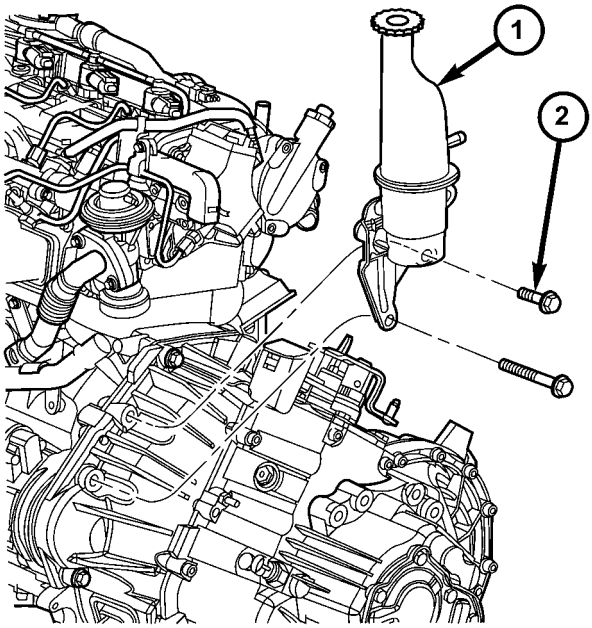

Fig. 16 Power Steering Reservoir

1 - RESERVOIR
2 - BOLT

(7) Disconnect back-up lamp switch connector (Fig. 17).

(8) Disconnect vehicle speed sensor connector (Fig. 17).

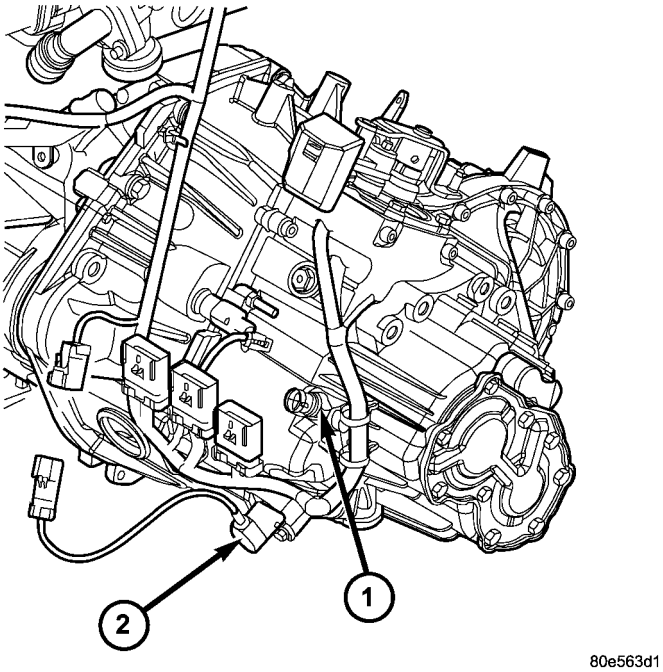

Fig. 17 VSS and Back-Up Lamp Switches

1 - BACK-UP LAMP SWITCH
2 - VEHICLE SPEED SENSOR (VSS)

(9) Disconnect clutch master cylinder hydraulic tube from clutch slave cylinder using Tool 6638A (Fig. 18) (Fig. 19).

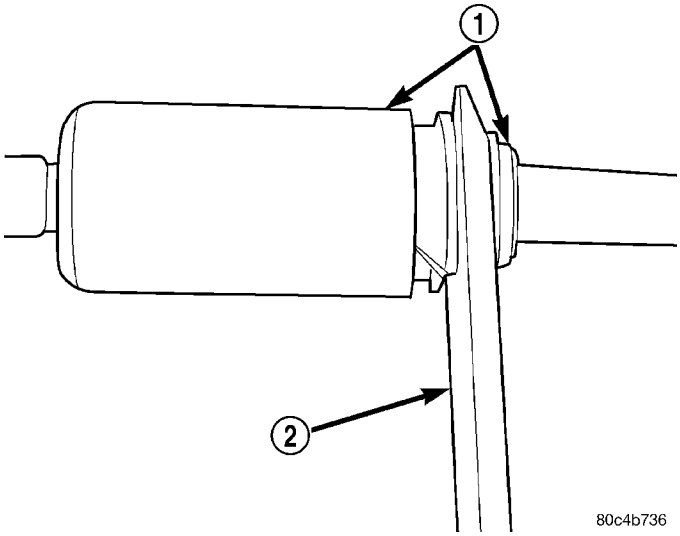

Fig. 18 Disconnect Clutch Hydraulic Quick Connect using Tool 6638A

1 - QUICK CONNECT FITTING
2 - TOOL 6638A

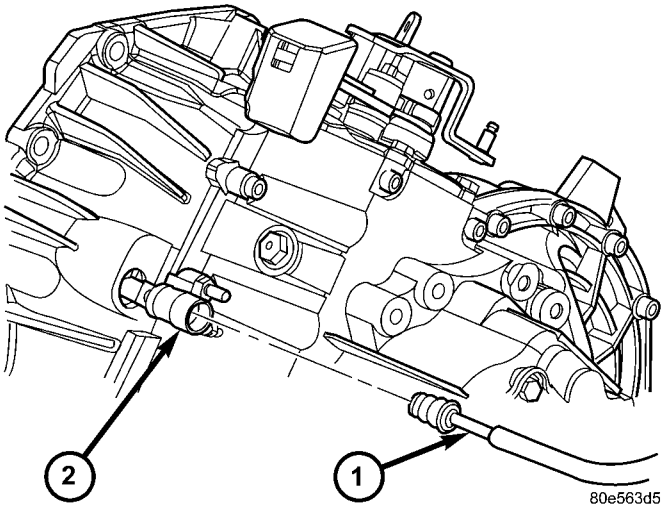

Fig. 19 Clutch Slave Cylinder Hydraulic Connection

1 - MASTER CYLINDER TUBE
2 - SLAVE CYLINDER

G288 MANUAL TRANSAXLE (Continued)

(10) Remove transaxle upper bellhousing-to-block bolts.

(11) Raise vehicle on hoist.

(12) Remove transaxle drain plug and drain into suitable container (Fig. 20).

(13) Remove halfshafts (Fig. 21).

(14) Remove three (3) intermediate shaft bearing-to-retainer bolts. Remove intermediate shaft/bearing assembly (Fig. 21).

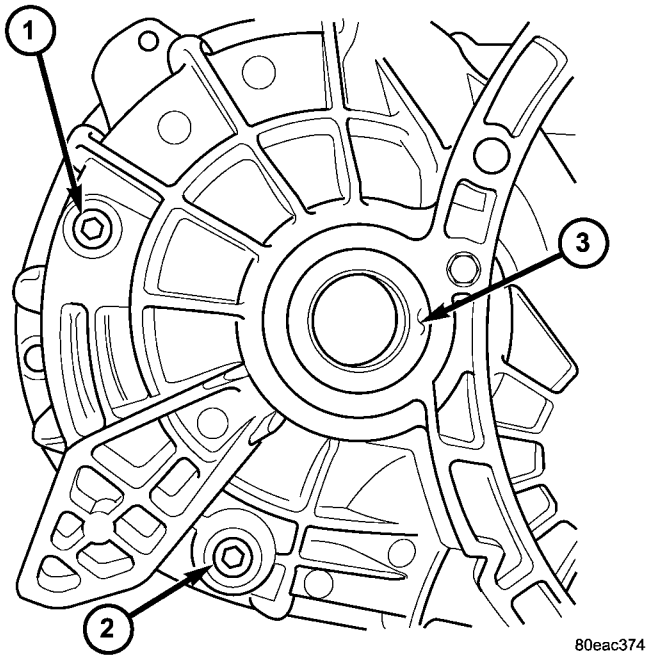

Fig. 20 Transaxle Fluid Drain and Fill Plugs

1 - FILL PLUG
2 - DRAIN PLUG
3 - RIGHT AXLE SEAL

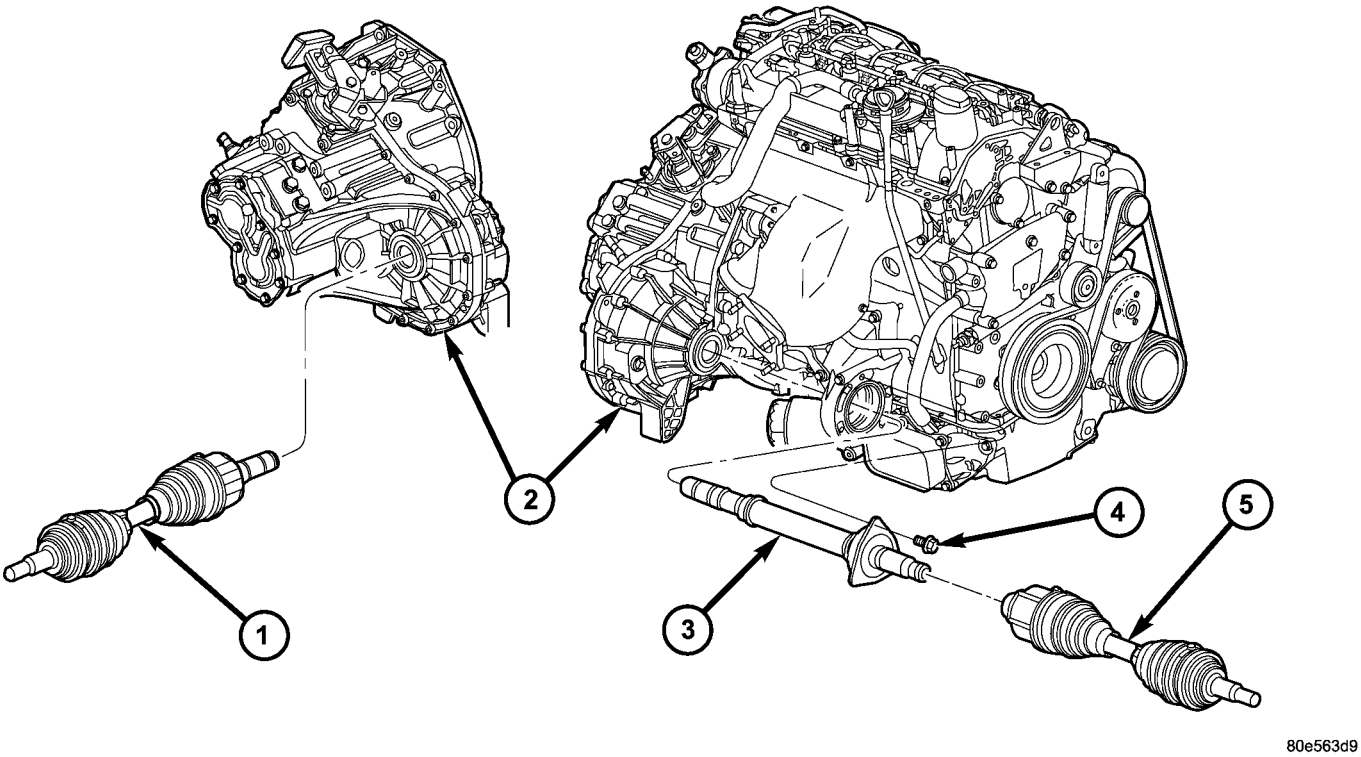

Fig. 21 Halfshaft and Intermediate Shaft

1 - HALFSHAFT (LH)
2 - TRANSAXLE
3 - INTERMEDIATE SHAFT
4 - BOLT (3)
5 - HALFSHAFT (RH)

G288 MANUAL TRANSAXLE (Continued)

(15) Remove two (2) intercooler connector pipe-to-engine oil pan bolts (Fig. 22) and position aside to access and remove oil pan-to-bellhousing bolt.

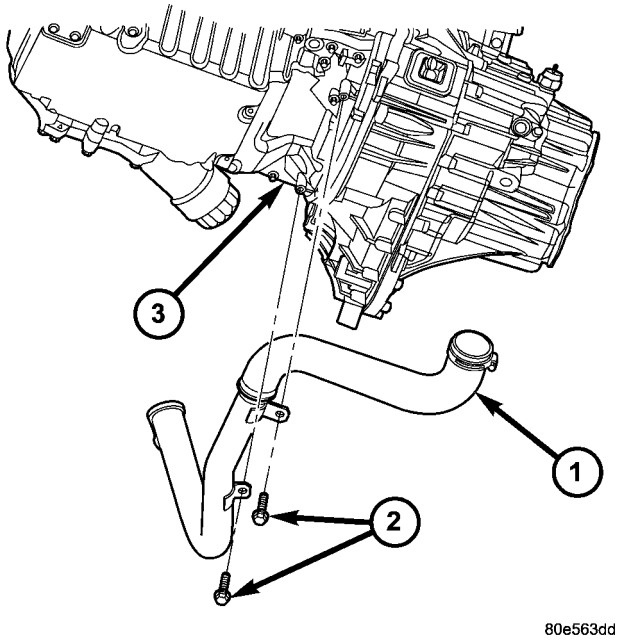

Fig. 22 Intercooler Inlet Hose Fasteners

1 - INTERCOOLER INLET HOSE
2 - SCREW (2)
3 - STRUCTURAL COLLAR

(16) Position screw jack and wood block to engine oil pan.

(17) Obtain access to engine compartment. Remove two (2) transaxle upper mount-to-bracket bolts (Fig. 23).

(18) Lower engine/transaxle assembly on screw jack.

(19) Remove transaxle upper mount bracket (Fig. 24).

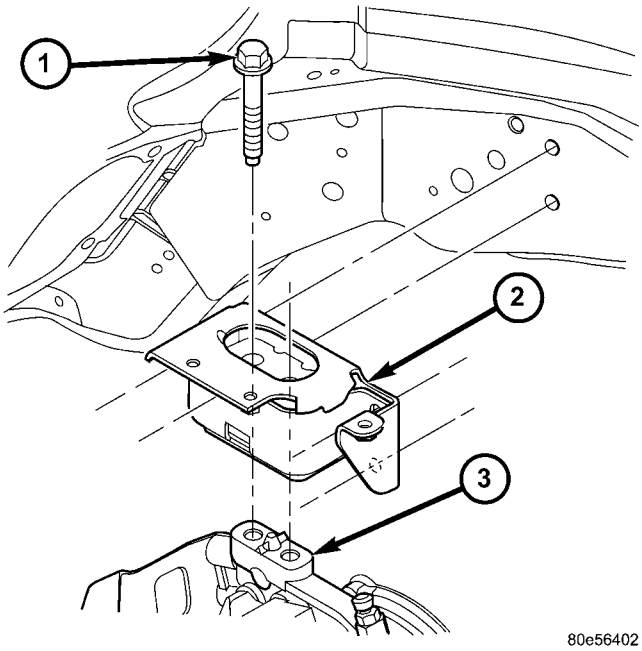

Fig. 23 Upper Mount-to-Bracket

1 - BOLT (2)
2 - MOUNT
3 - BRACKET

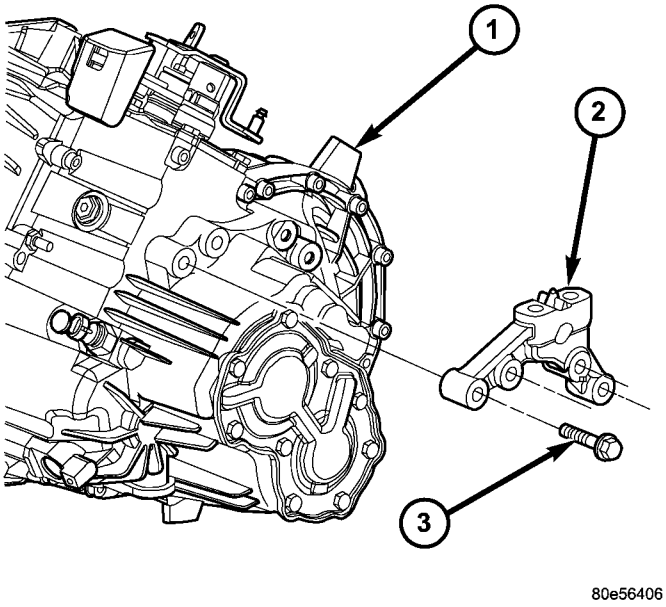

Fig. 24 Transaxle Upper Mount Bracket

1 - TRANSAXLE
2 - BRACKET
3 - BOLT

G288 MANUAL TRANSAXLE (Continued)

(20) Position transmission jack to transaxle. Secure transaxle to jack.

(21) Remove starter lower bolt with ground cable (Fig. 25).

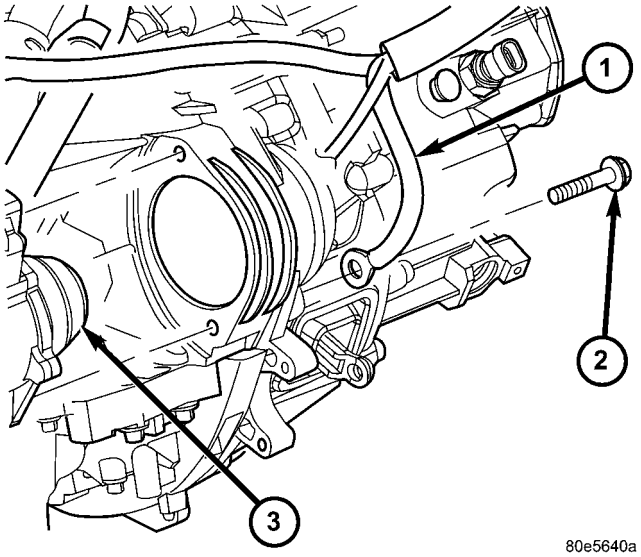

Fig. 25 Starter Bolt and Ground Cable

1 - GROUND CABLE
2 - BOLT
3 - STARTER MOTOR

(22) Remove remaining bellhousing-to-block bolts.

(23) Lower transaxle assembly from engine/vehicle.

REMOVAL—2.4L TURBO

(1) Disconnect battery negative cable.

(2) Remove air cleaner assembly (Fig. 26).

(3) Remove Power Distribution Center (PDC) from bracket. Remove Air Cleaner/PDC mounting bracket (Fig. 27).

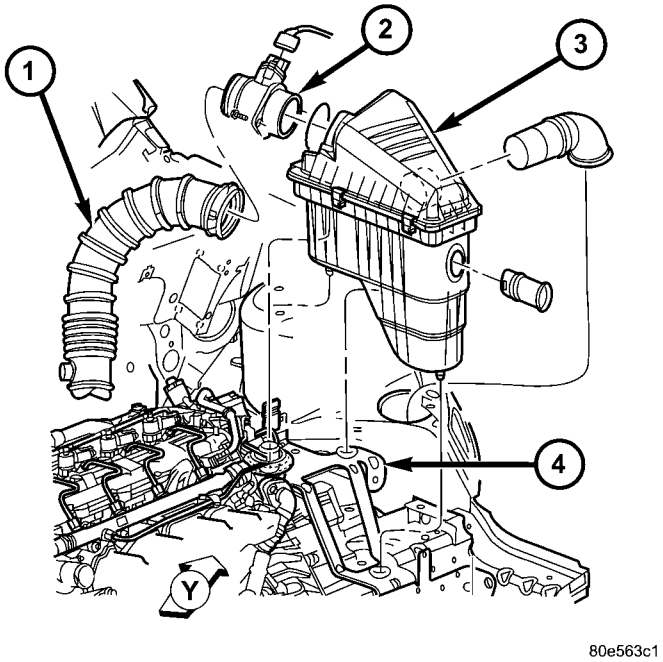

Fig. 26 Air Cleaner Assembly—Typical

1 - DUCT
2 - MASS AIR FLOW SENSOR
3 - AIR CLEANER ASSEMBLY
4 - BRACKET

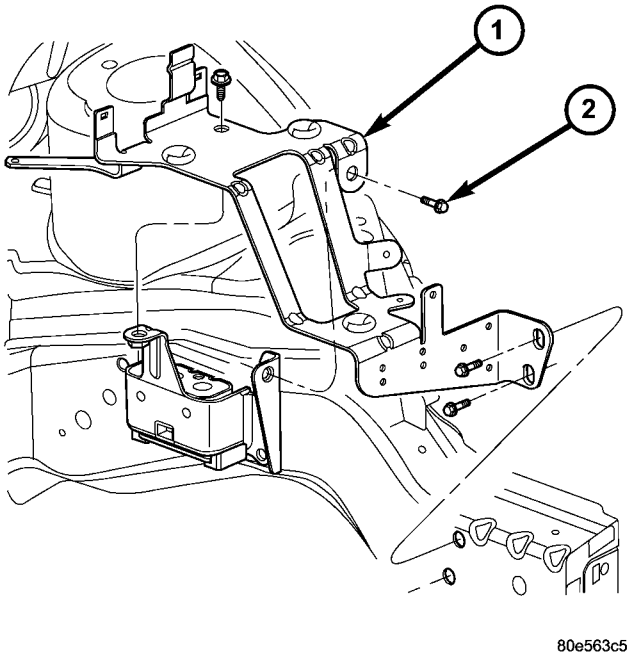

Fig. 27 Air Cleaner/PDC Bracket

1 - BRACKET
2 - BOLT (4)

G288 MANUAL TRANSAXLE (Continued)

(4) Disconnect gearshift cables from shift mechanism and bracket (Fig. 28). Position cables out of way.

(5) Remove gearshift cable bracket (Fig. 28).

(6) Disconnect back-up lamp switch connector (Fig. 29).

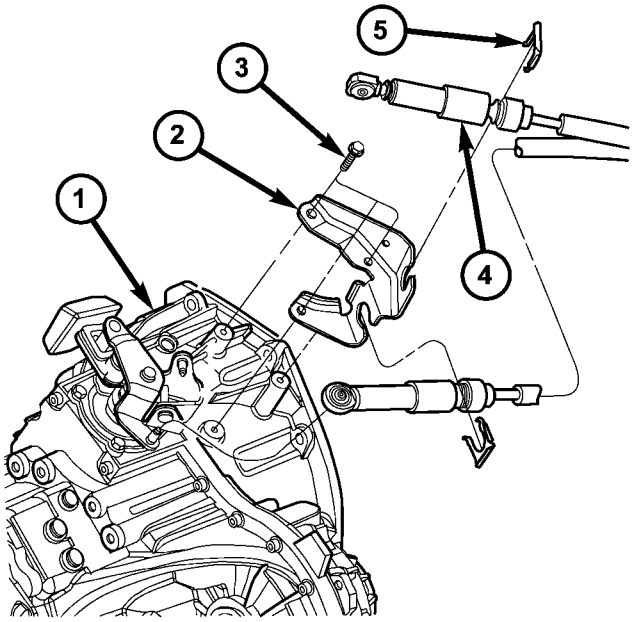

Fig. 28 Gear Shift Cables and Bracket at Transaxle

1 - TRANSAXLE
2 - GEAR SHIFT CABLE BRACKET
3 - BOLT (3)
4 - CABLE ASSEMBLY
5 - RETAINER (2)

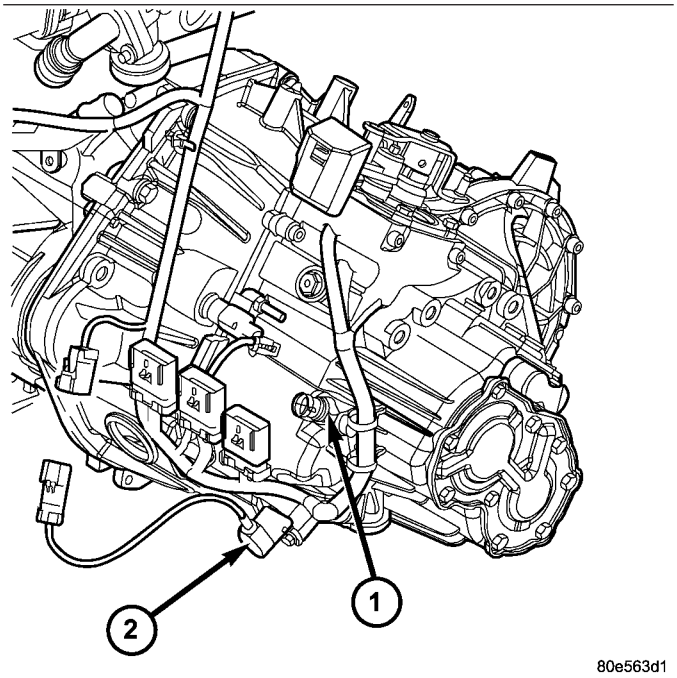

Fig. 29 VSS and Back-Up Lamp Switches

1 - BACK-UP LAMP SWITCH
2 - VEHICLE SPEED SENSOR (VSS)

(7) Disconnect vehicle speed sensor connector (Fig. 29).

(8) Disconnect clutch master cylinder hydraulic tube from clutch slave cylinder using Tool 6638A (Fig. 30) (Fig. 31).

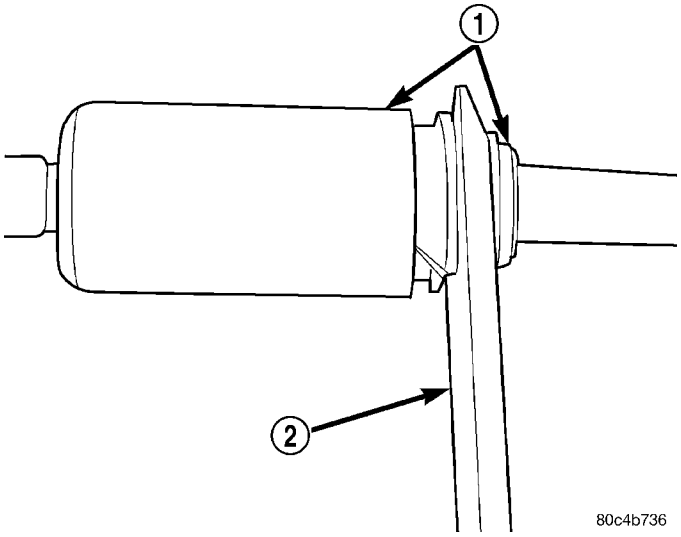

Fig. 30 Disconnect Clutch Hydraulic Quick Connect using Tool 6638A

1 - QUICK CONNECT FITTING
2 - TOOL 6638A

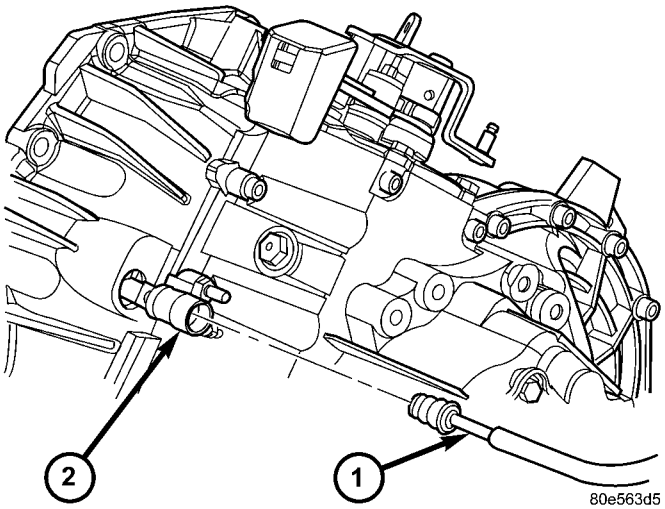

Fig. 31 Clutch Slave Cylinder Hydraulic Connection

1 - MASTER CYLINDER TUBE
2 - SLAVE CYLINDER

G288 MANUAL TRANSAXLE (Continued)

(9) Remove transaxle upper bellhousing-to-block bolts.

(10) Raise vehicle on hoist.

(11) Remove transaxle drain plug and drain into suitable container (Fig. 32).

(12) Remove halfshafts (Fig. 33).

(13) Remove three (3) intermediate shaft bearing-to-retainer bolts. Remove intermediate shaft/bearing assembly (Fig. 33).

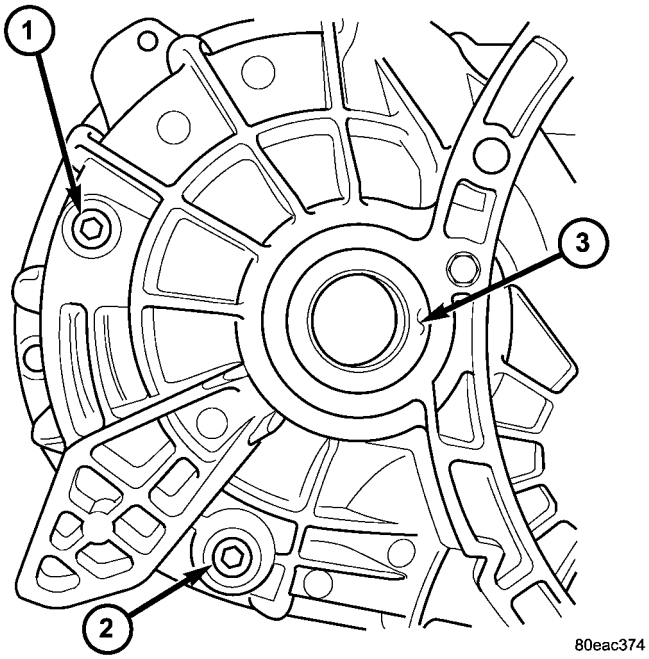

Fig. 32 Transaxle Fluid Drain and Fill Plugs

1 - FILL PLUG
2 - DRAIN PLUG
3 - RIGHT AXLE SEAL

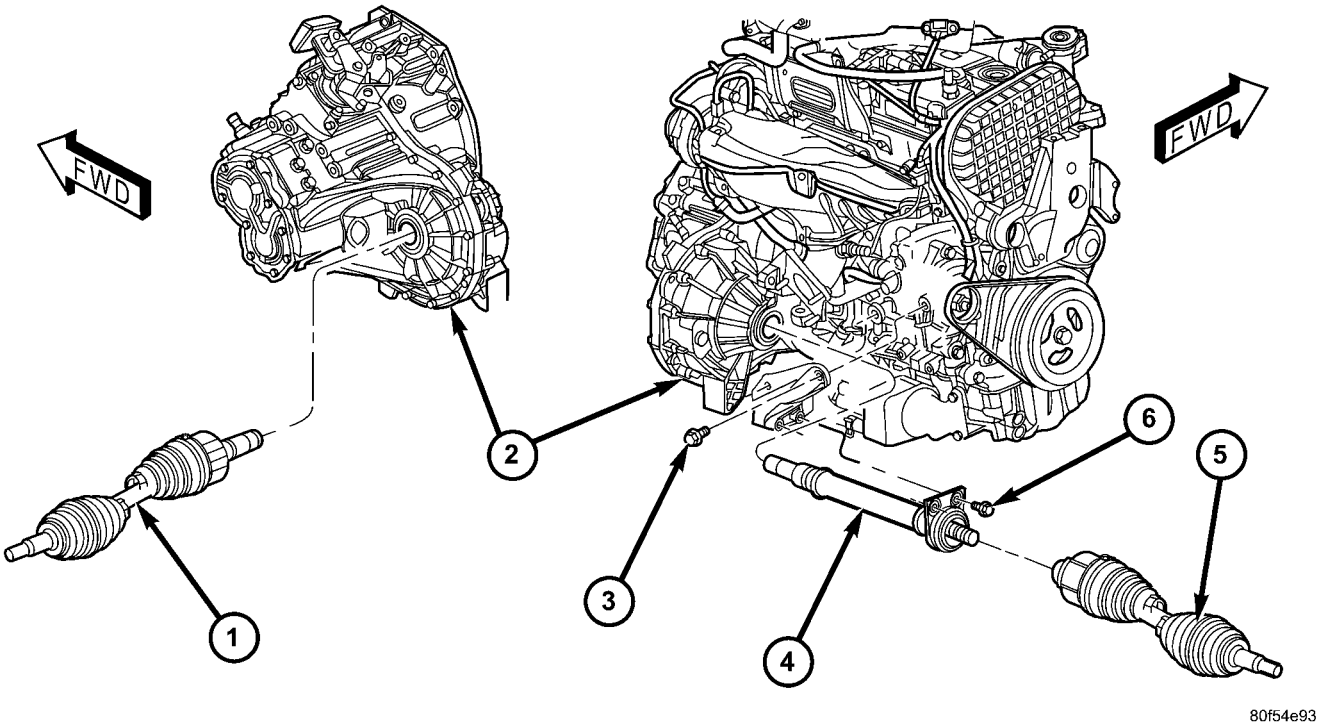

Fig. 33 Halfshaft and Intermediate Shaft

1 - HALFSHAFT (LH)
2 - TRANSAXLE
3 - BOLT
4 - INTERMEDIATE SHAFT
5 - HALFSHAFT (RH)
6 - BOLT (2)

G288 MANUAL TRANSAXLE (Continued)

(14) Remove two (2) intercooler connector pipe-to-engine oil pan bolts (Fig. 34) and position aside to access and remove oil pan-to-bellhousing bolt.

(15) Position screw jack and wood block to engine oil pan.

(16) Obtain access to engine compartment. Remove two (2) transaxle upper mount-to-bracket bolts (Fig. 35).

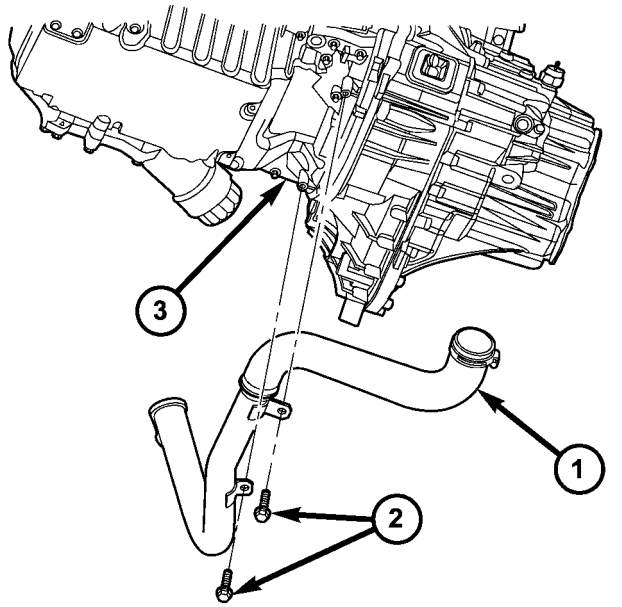

Fig. 34 Intercooler Inlet Hose Fasteners

1 - INTERCOOLER INLET HOSE
2 - SCREW (2)
3 - STRUCTURAL COLLAR

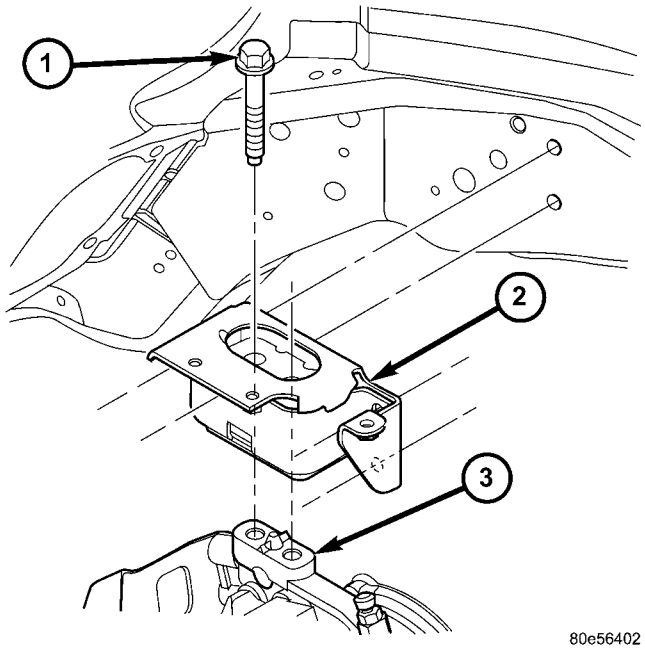

Fig. 35 Upper Mount-to-Bracket

1 - BOLT (2)
2 - MOUNT
3 - BRACKET

(17) Lower engine/transaxle assembly on screw jack.

(18) Remove transaxle upper mount bracket (Fig. 36).

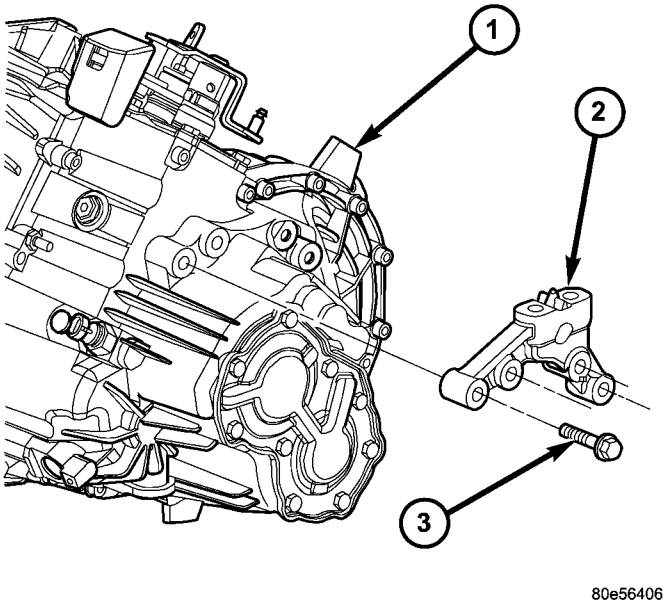

Fig. 36 Transaxle Upper Mount Bracket

1 - TRANSAXLE
2 - BRACKET
3 - BOLT

(19) Position transmission jack to transaxle. Secure transaxle to jack.

(20) Remove starter lower bolt with ground cable (Fig. 37).

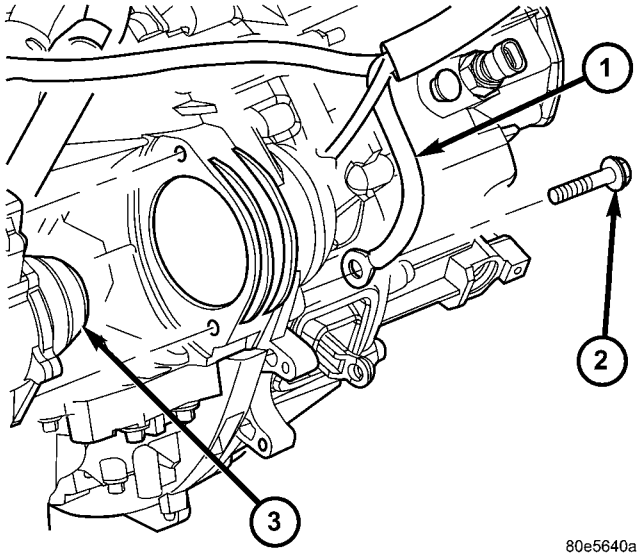

Fig. 37 Starter Bolt and Ground Cable

1 - GROUND CABLE
2 - BOLT
3 - STARTER MOTOR

G288 MANUAL TRANSAXLE (Continued)

(21) Remove four (4) modular clutch-to-drive plate bolts (Fig. 38). While removing bolts, one tight-tolerance (slotted) drive plate hole will be encountered. When this bolt is removed, mark driveplate and modular clutch assembly at this location, and be sure to align marks upon reassembly.

(22) Remove remaining bellhousing-to-block bolts (Fig. 39).

(23) Lower transaxle assembly from engine/vehicle.

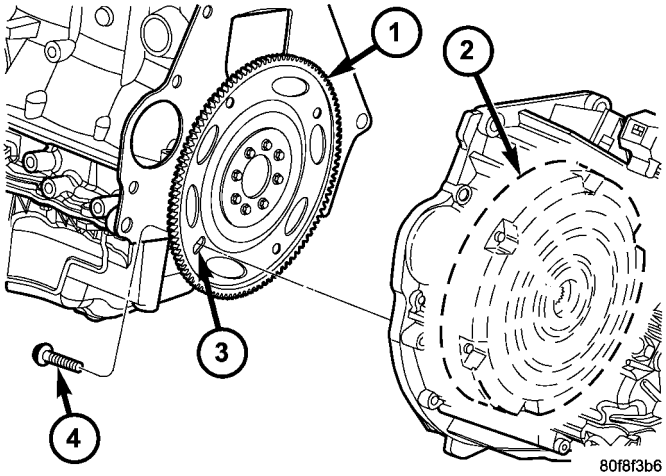

Fig. 38 Modular Clutch-to-Driveplate Bolts

1 - DRIVEPLATE
2 - MODULAR CLUTCH ASSEMBLY
3 - TIGHT TOLERANCE HOLE
4 - BOLT (4)

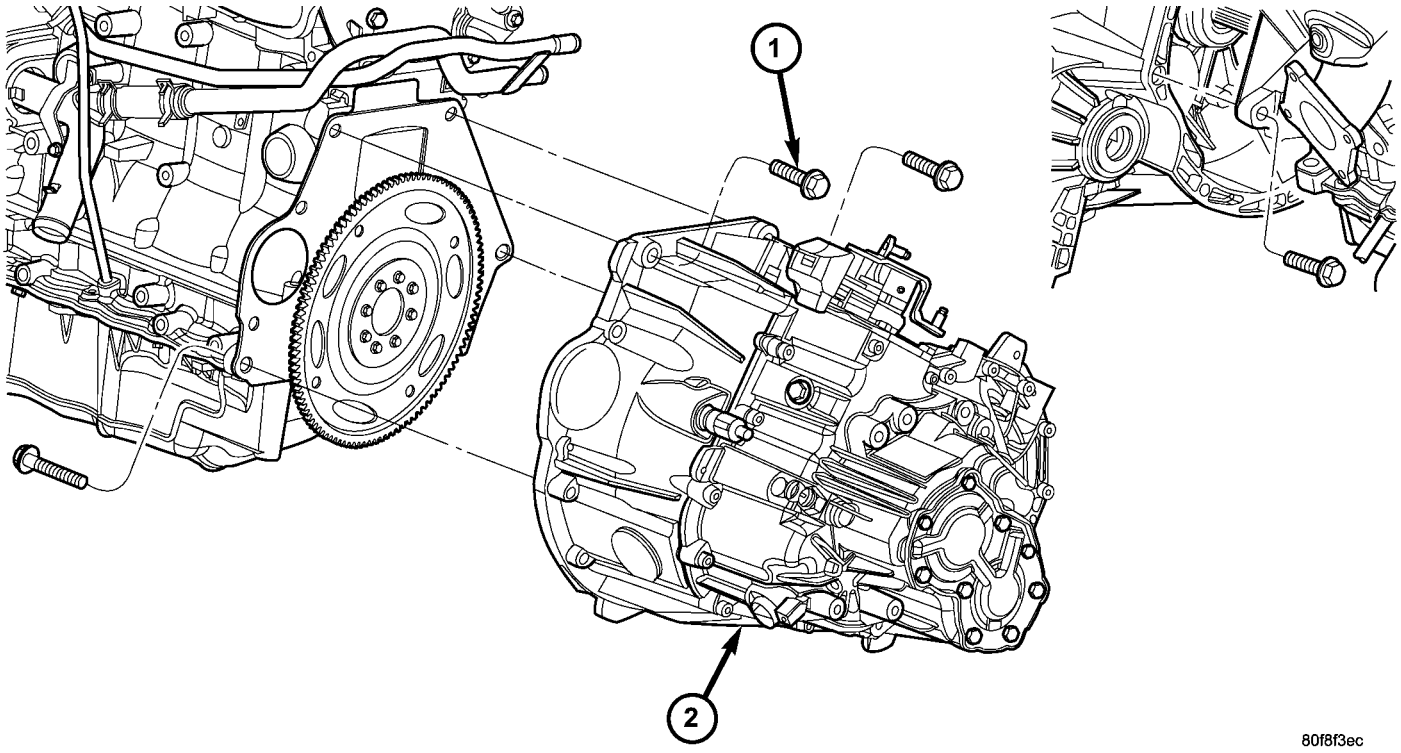

Fig. 39 Transaxle Removal/Installation

1 - BOLT (4)
2 - G288 TRANSAXLE

G288 MANUAL TRANSAXLE (Continued)

DISASSEMBLY

(1) Using Tools C-3752 and 8870, remove four (4) shift rod detent plugs (Fig. 40).

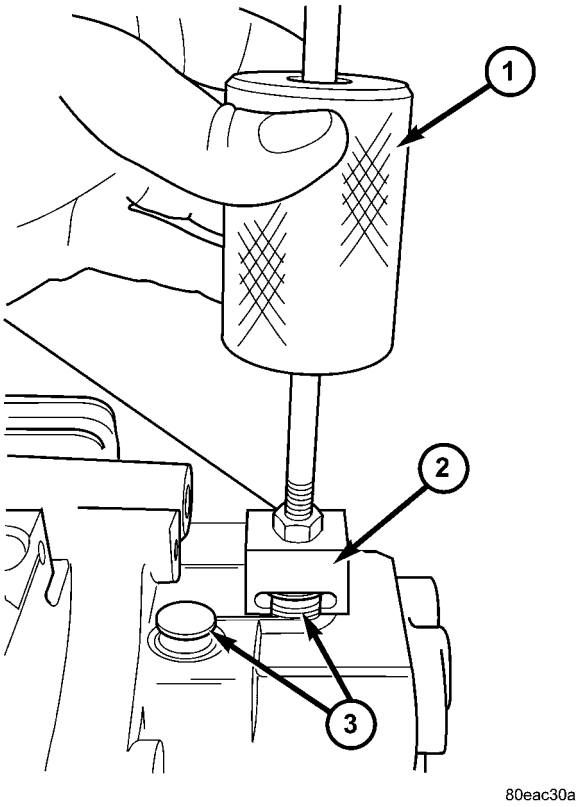

Fig. 40 Detent Plug Removal

1 - TOOL C-3752
2 - TOOL 8870
3 - DETENT PLUG

(2) Remove clutch slave cylinder (Fig. 41).

(3) Remove reverse gear lock-out plug, spring, and pin (Fig. 42). Use magnet to remove pin from transaxle.

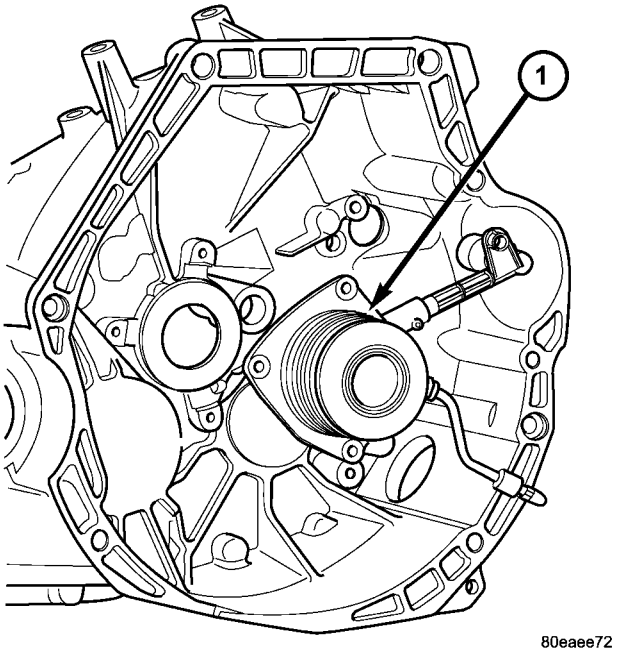

Fig. 41 CSC Removal/Installation

1 - CONCENTRIC SLAVE CYLINDER (CSC)

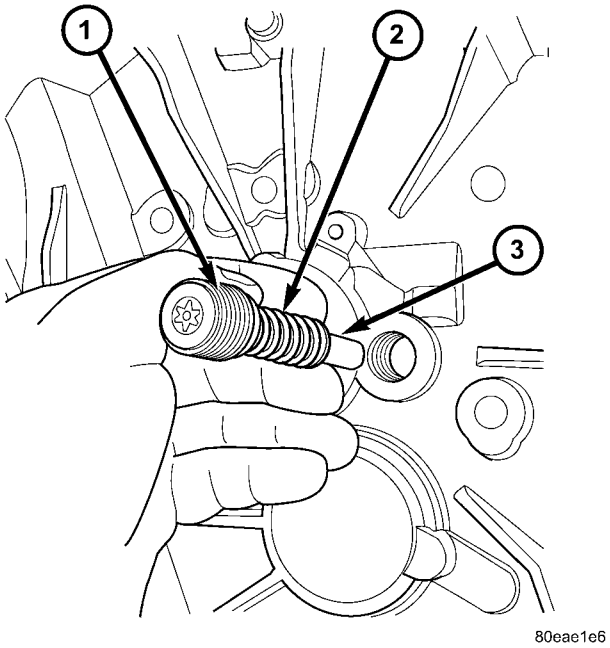

Fig. 42 Crossover Detent Components

1 - PLUG
2 - SPRING
3 - PIN

G288 MANUAL TRANSAXLE (Continued)

(4) Remove shift shaft detent assembly (Fig. 43).

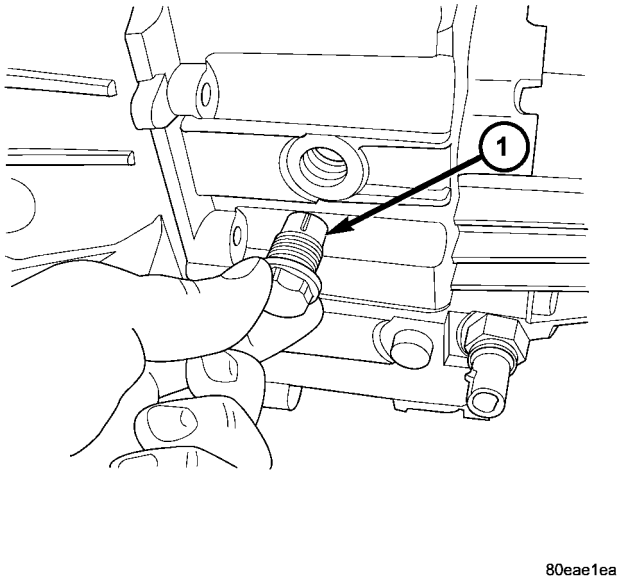

Fig. 43 Shift Shaft Detent Assembly

1 - DETENT ASSEMBLY

(5) Remove backup lamp switch (Fig. 44).

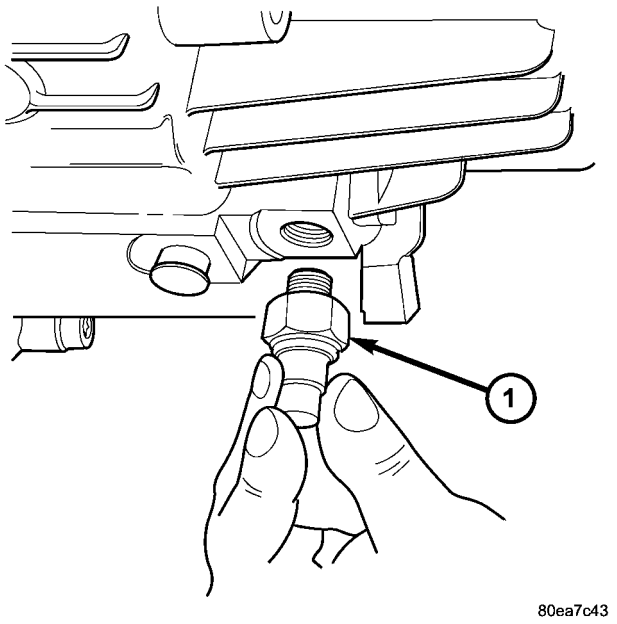

Fig. 44 Backup Lamp Switch

1 - BACKUP LAMP SWITCH

(6) Verify that transaxle is in neutral. Remove shift shaft assembly-to-case bolts (Fig. 45).

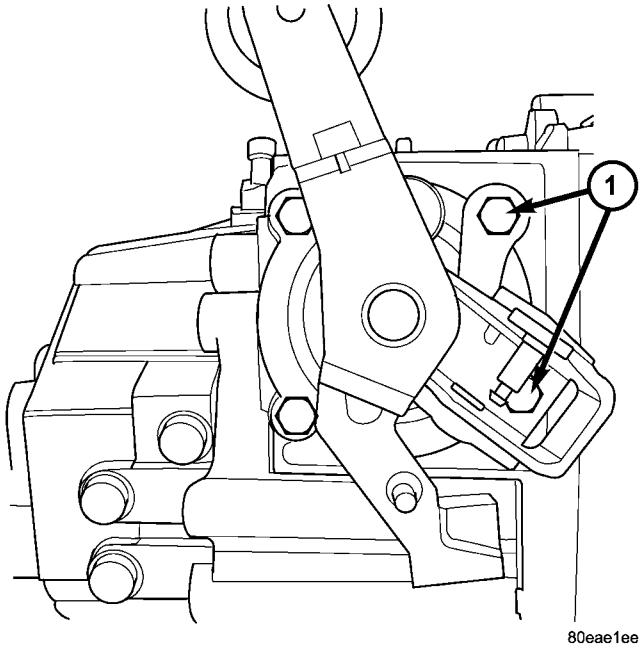

Fig. 45 Shift Shaft-to-Case Bolts

1 - BOLT (4)

(7) Remove shift shaft assembly by gently prying between mechanism and case using a suitable screwdriver.

(8) Remove end cover-to-case bolts (Fig. 46).

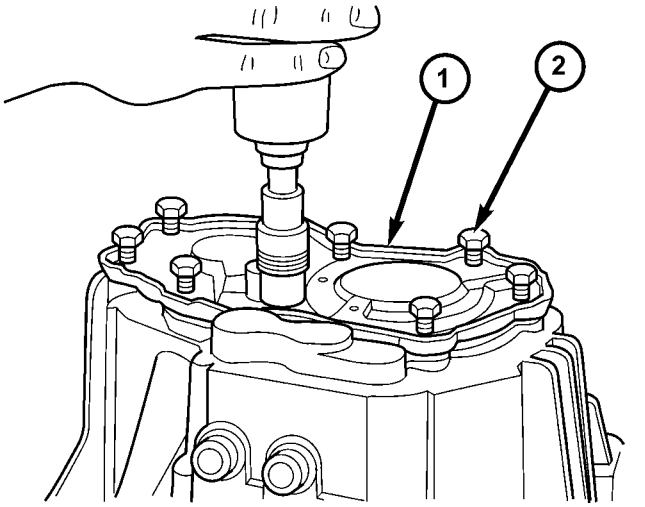

Fig. 46 End Cover-to-Case Bolts

1 - END COVER
2 - BOLT (9)

G288 MANUAL TRANSAXLE (Continued)

(9) Using a soft tipped hammer, break end cover-to-case seal and remove end cover (Fig. 47).

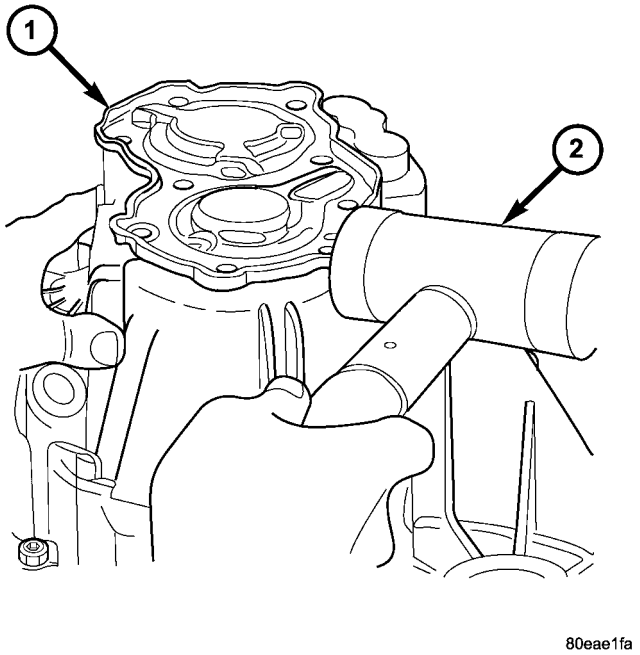

Fig. 47 End Cover Removal

1 - END COVER
2 - SOFT-TIPPED HAMMER

(10) Remove and inspect plastic oil diverters (Fig. 48) (Fig. 49). **Replace if damaged or cracked in any manner.**

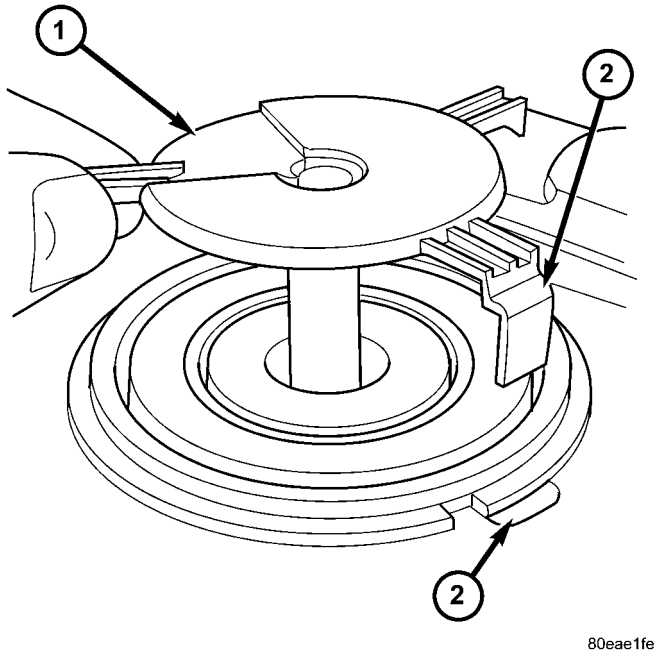

Fig. 48 Input Shaft Oil Diverter

1 - DIVERTER
2 - LOCATING PROVISIONS

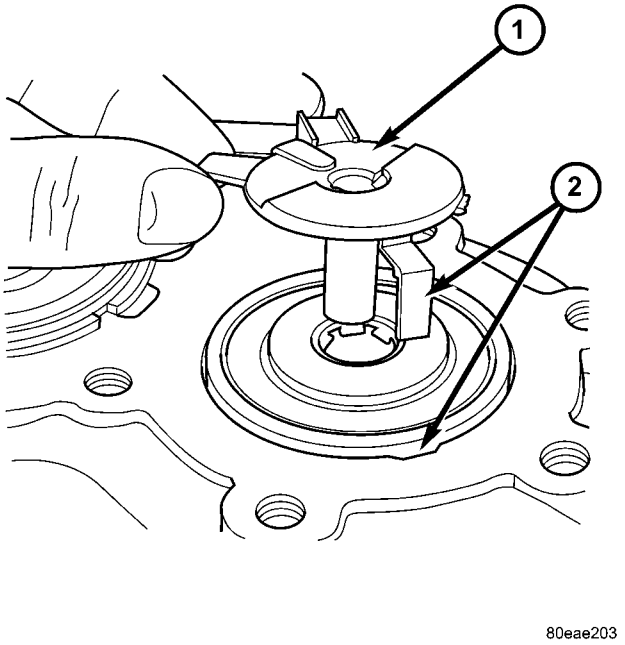

Fig. 49 Output Shaft Oil Diverter

1 - DIVERTER
2 - LOCATOR PROVISIONS

(11) Using suitable screwdriver, place transaxle into fifth AND reverse gears as shown in (Fig. 50) (Fig. 51). This locks up geartrain and facilitates removal of bearing retaining screws.

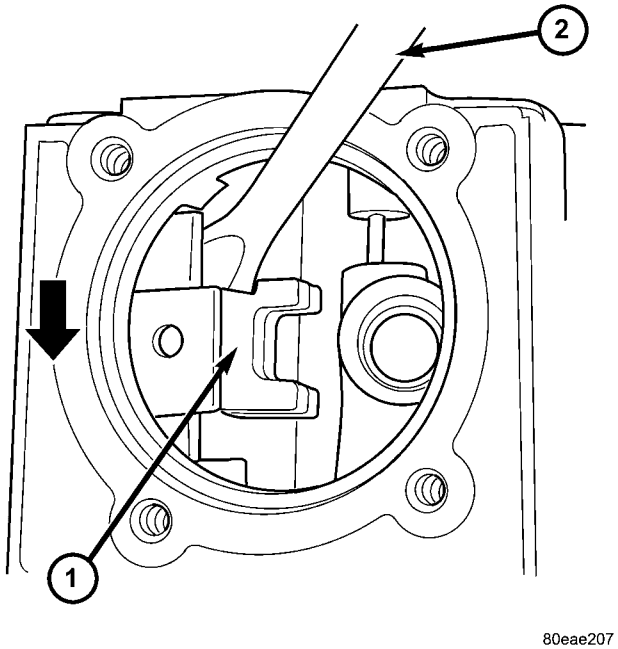

Fig. 50 Engage Fifth Gear

1 - FIFTH GEAR FORK
2 - SCREWDRIVER

G288 MANUAL TRANSAXLE (Continued)

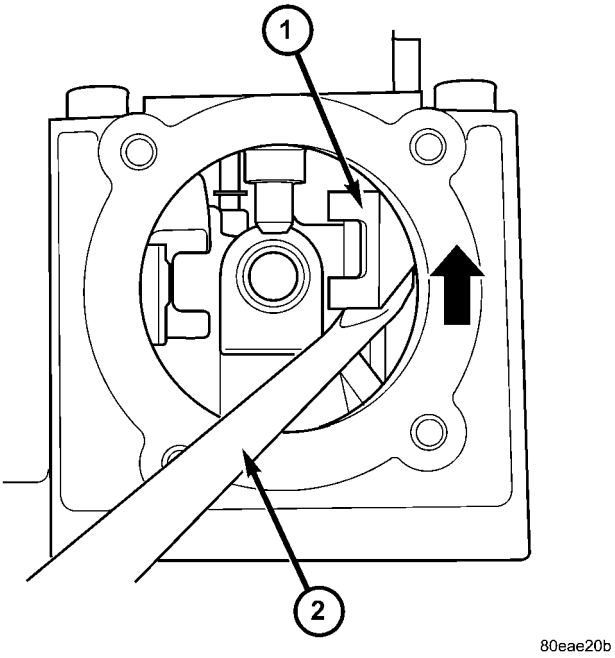

Fig. 51 Engage Reverse Gear

1 - REVERSE GEAR FORK
2 - SCREWDRIVER

(12) Remove input and output shaft bearing retainer screws (Fig. 52).

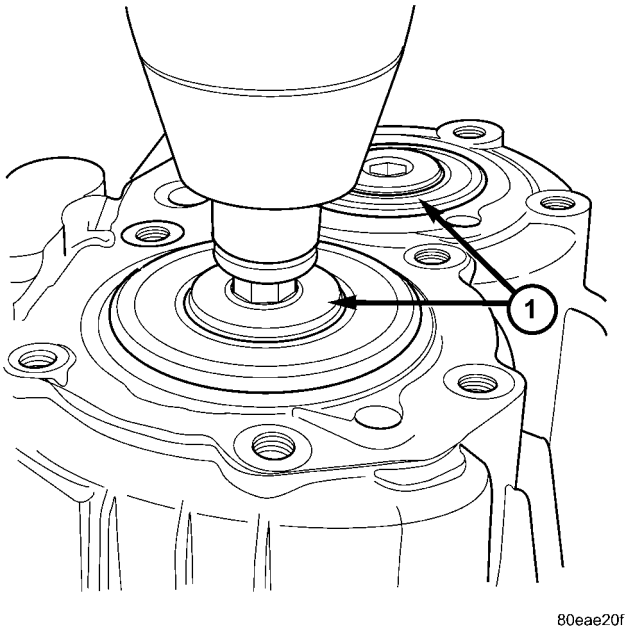

Fig. 52 Bearing Retaining Screws

1 - RETAINING SCREWS (2)

(13) Remove twenty (20) geartrain housing-to-clutch bellhousing bolts (Fig. 53) (Fig. 54).

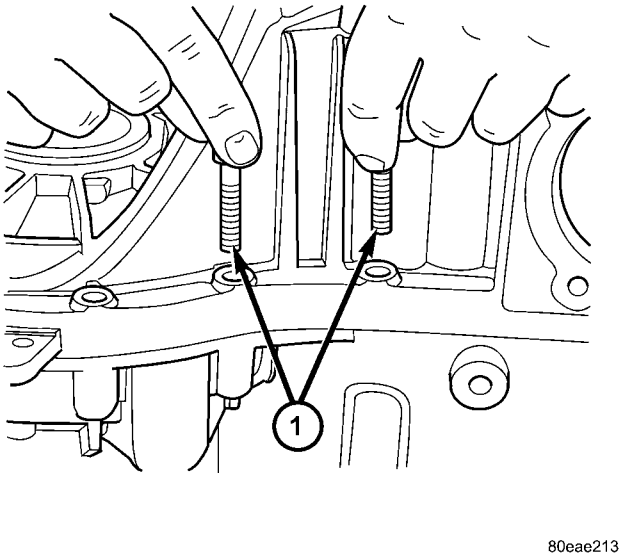

Fig. 53 Geartrain Housing-to-Clutch Bellhousing Bolts (Short)

1 - BOLTS (18-SHORT)

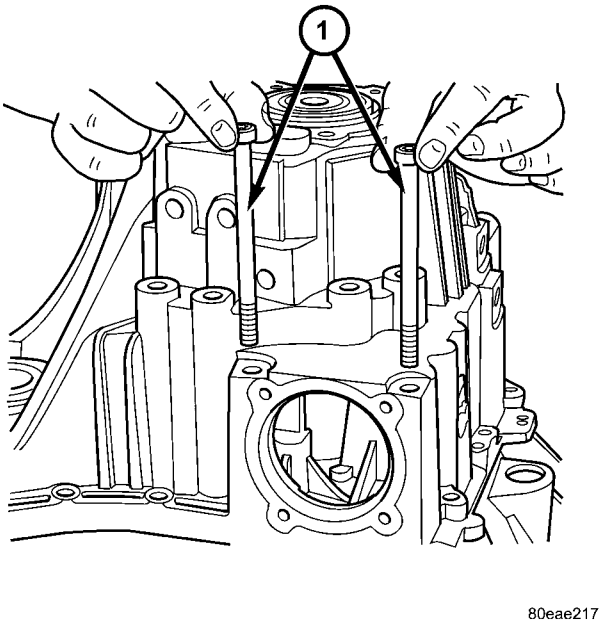

Fig. 54 Geartrain Housing-to-Clutch Bellhousing Bolts (Long)

1 - BOLTS (2-LONG)

G288 MANUAL TRANSAXLE (Continued)

(14) Using a soft tipped hammer, tap clutch bellhousing to break loose and remove from geartrain housing. Reverse shaft and fork/rail assembly will remain with the clutch bellhousing.

(15) Using a suitable prybar(s), separate reverse shaft assembly from clutch bellhousing.

(16) Remove differential assembly from transaxle housing.

(17) Place Tool 8869-2 into input and output shafts at rear of case. Set transaxle and tool on press bed as shown in (Fig. 55).

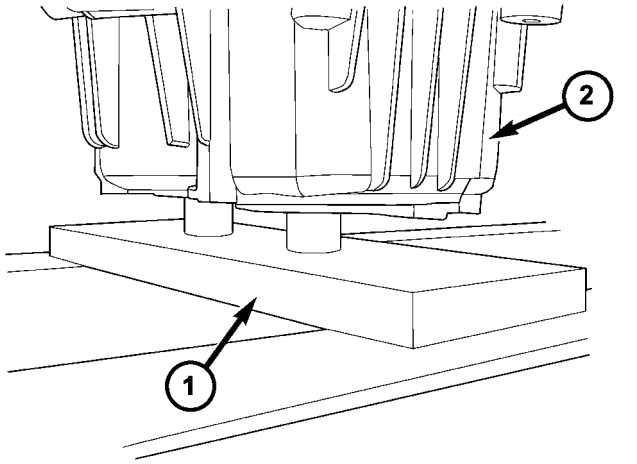

80eae21b

Fig. 55 Geartrain Housing on 8869-2

1 - TOOL 8869-2
2 - GEARTRAIN HOUSING

(18) Set Tool 8869-1 across case flange as shown in (Fig. 56). Press Tool 8869-1 to remove input shaft, output shaft, and fork/rail assemblies from case.

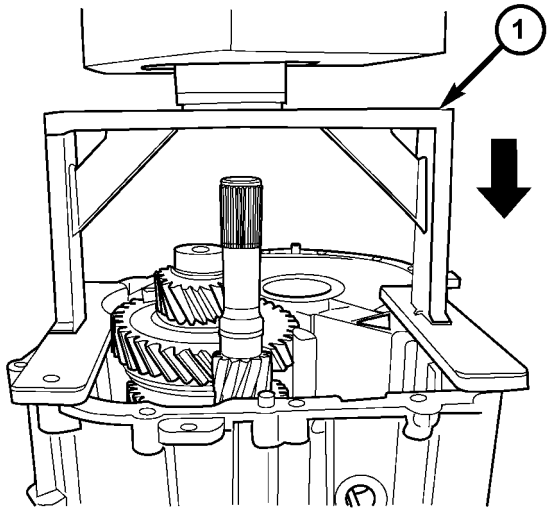

80eae220

Fig. 56 Geartrain Removal from Housing

1- TOOL 8869-1

(19) Remove input and output shaft oil troughs (Fig. 57) (Fig. 58).

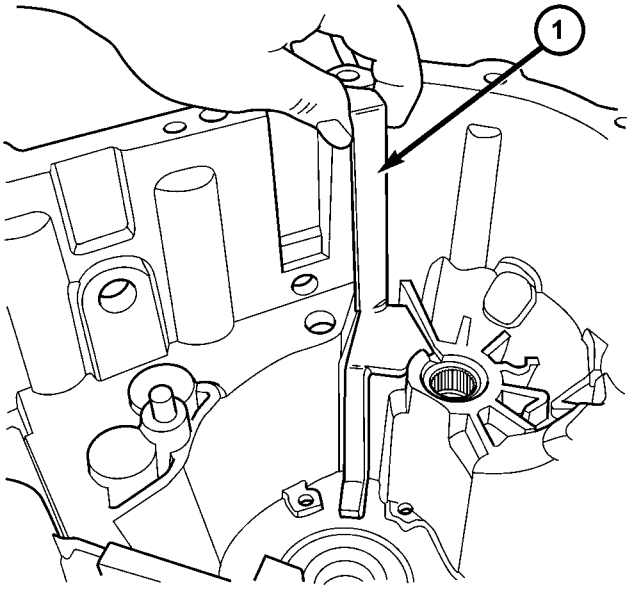

80eae224

Fig. 57 Input Shaft Oil Trough

1 - OIL TROUGH

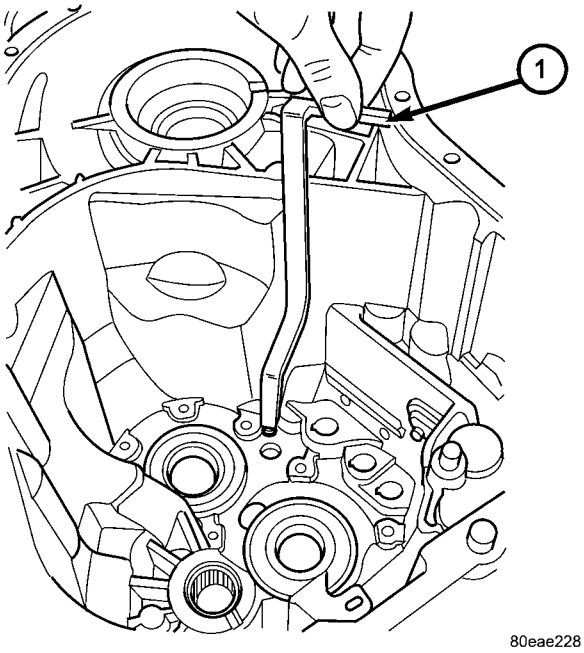

80eae228

Fig. 58 Output Shaft Oil Trough

1 - OIL TROUGH

G288 MANUAL TRANSAXLE (Continued)

ASSEMBLY

(1) Install input and output shaft oil troughs to transaxle housing as shown in (Fig. 57) (Fig. 58).

(2) Install output shaft roller bearing to clutch bellhousing (Fig. 59).

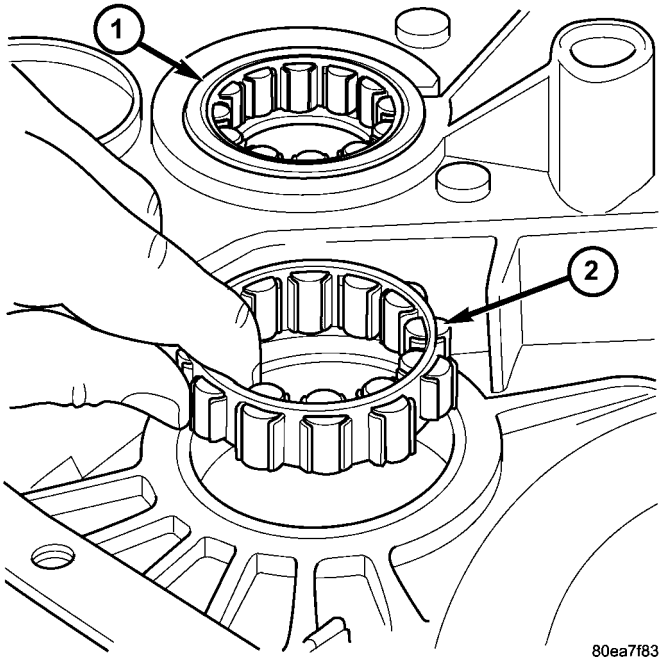

Fig. 59 Output Shaft Bearing Installation

1 - INPUT SHAFT BEARING
2 - OUTPUT SHAFT BEARING

(3) Install differential assembly (Fig. 60).

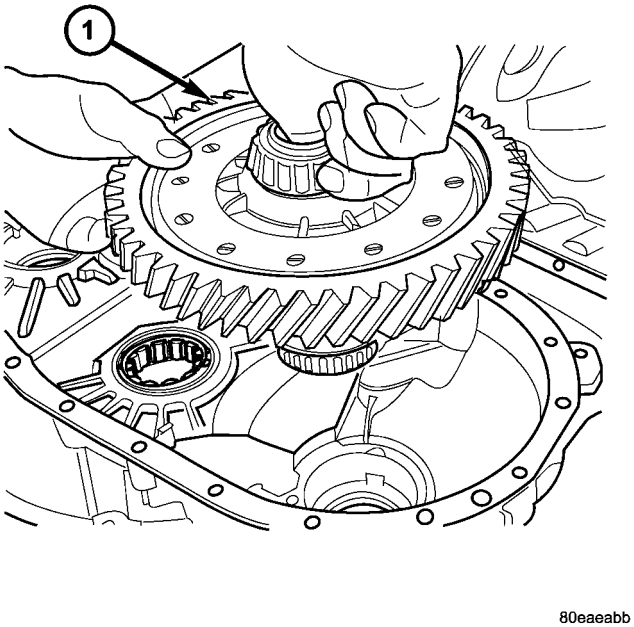

Fig. 60 Differential Assembly

1 - DIFFERENTIAL ASSEMBLY

(4) Using heat gun, heat reverse shaft bearing boss in transaxle case to expand for reverse shaft/ bearing installation (Fig. 61).

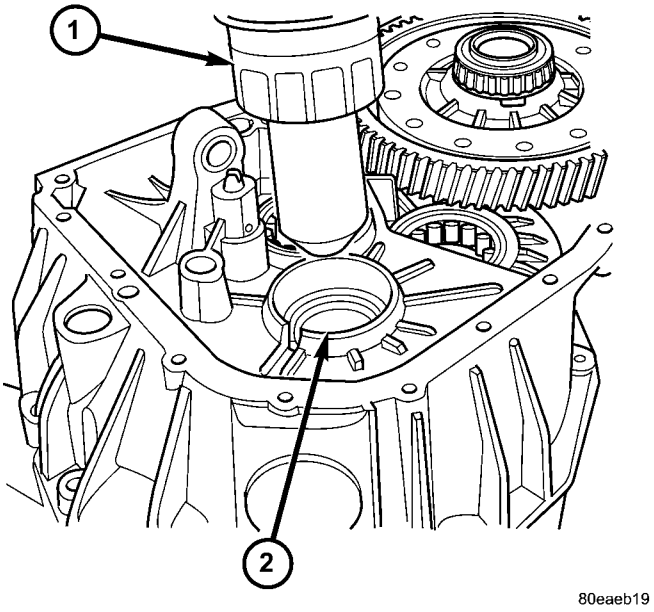

Fig. 61 Heating Reverse Shaft Bearing Bore

1 - HEAT GUN
2 - BEARING BORE

(5) Install reverse shaft and fork/rod as shown in (Fig. 62).

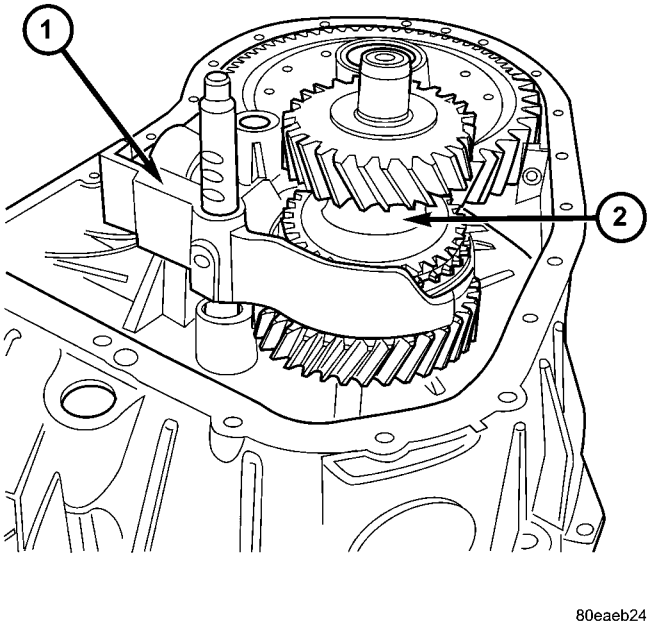

Fig. 62 Reverse Shaft and Fork Assembly

1 - FORK/ROD ASSY.
2 - REVERSE SHAFT ASSY.

G288 MANUAL TRANSAXLE (Continued)

(6) Install geartrain (with forks/rods) into case (Fig. 63). Verify proper installation of input and output shaft assemblies, as well as proper orientation of shift rod/fork assemblies (Fig. 64).

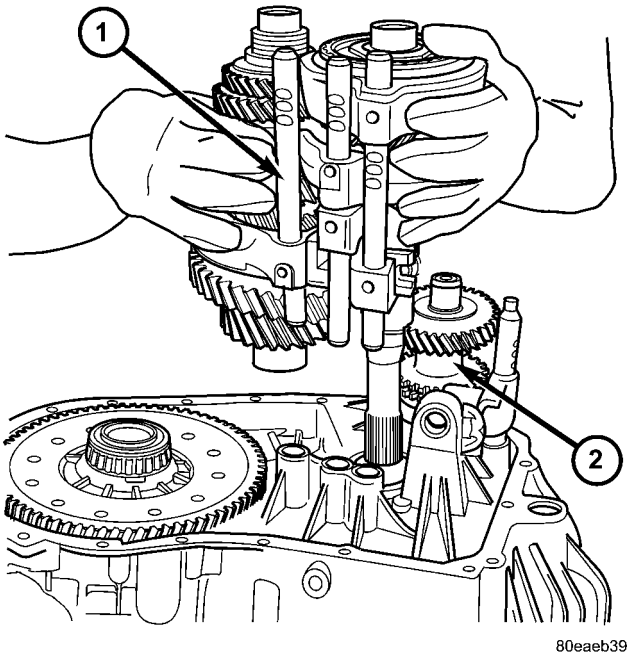

Fig. 63 Install Geartrain to Clutch Bellhousing

1 - GEARTRAIN
2 - REVERSE SHAFT ASSY.

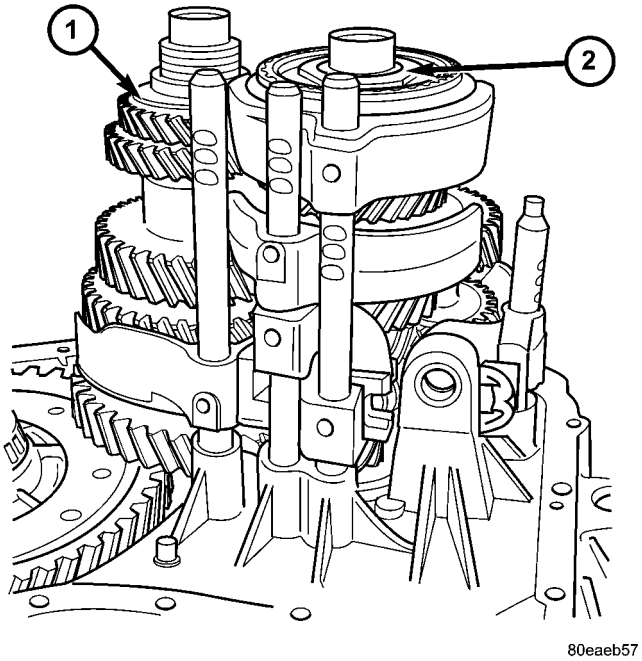

Fig. 64 Properly Installed Geartrain

1 - INTERMEDIATE SHAFT
2 - INPUT SHAFT

(7) Install chip collector magnet to case and retain with grease.

(8) Apply a bead of Mopar® Gasket Maker or Omnifit FD-40 to clutch bellhousing flange. Install geartrain housing and install transaxle housing-to-clutch bellhousing bolts by hand (Fig. 65) (Fig. 66) (Fig. 67).

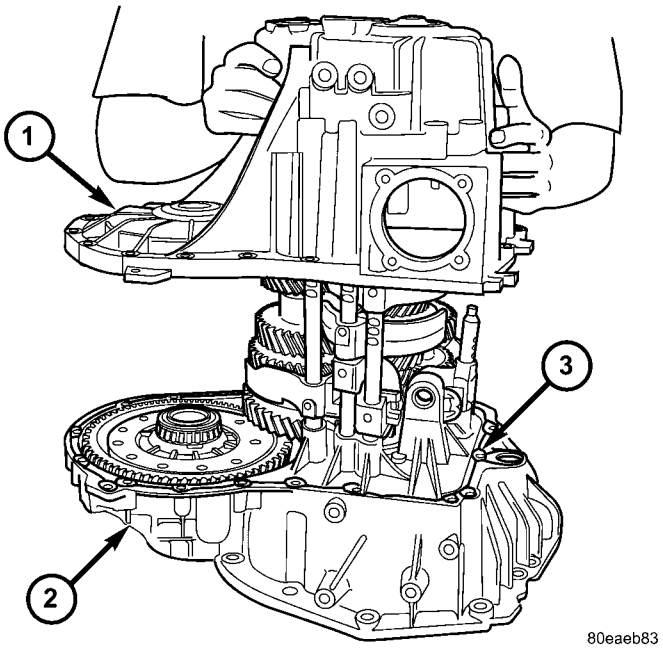

Fig. 65 Install Geartrain Housing

1 - TRANSAXLE HOUSING
2 - CLUTCH BELLHOUSING
3 - SEALER BEAD

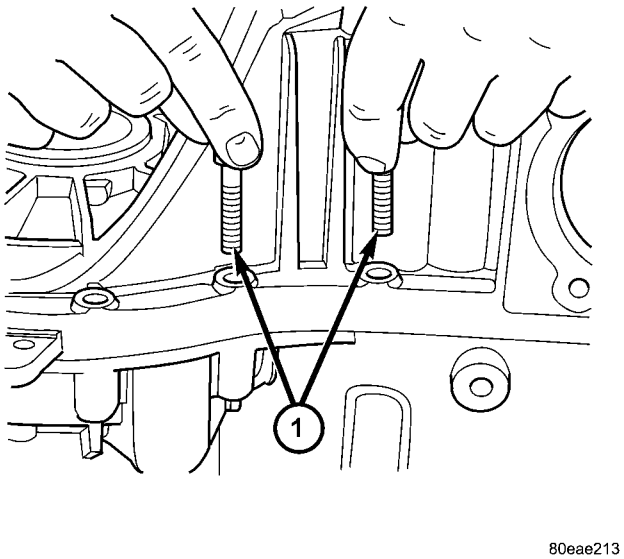

Fig. 66 Geartrain Housing-to-Clutch Bellhousing Bolts (Short)

1 - BOLTS (18-SHORT)

G288 MANUAL TRANSAXLE (Continued)

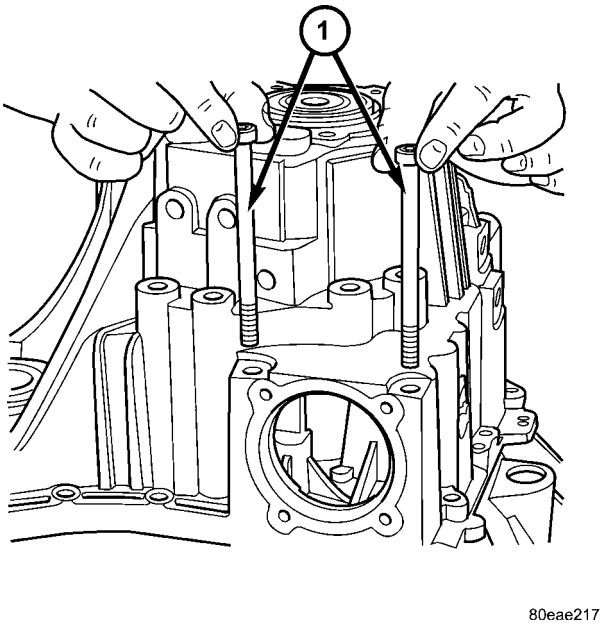

Fig. 67 Geartrain Housing-to-Clutch Bellhousing Bolts (Long)

1 - BOLTS (2-LONG)

(9) Torque twenty (18 short, 2 long) geartrain housing-to-clutch bellhousing bolts to 28 N·m (21 ft. lbs.) torque (Fig. 68).

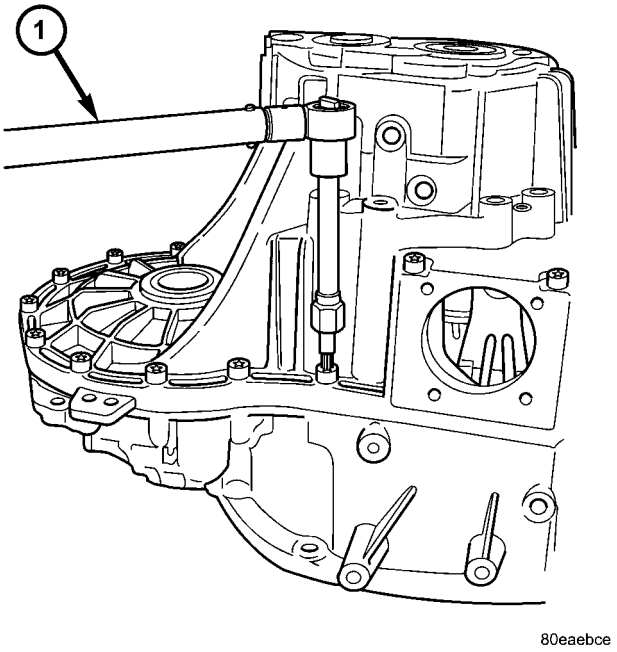

Fig. 68 Torquing Transaxle Housing to Clutch Bellhousing Bolts

1 - TORQUE WRENCH

(10) Using an arbor press and Tools C-4171 and 8871, install input and output shaft roller bearings as shown in (Fig. 69) (Fig. 70).

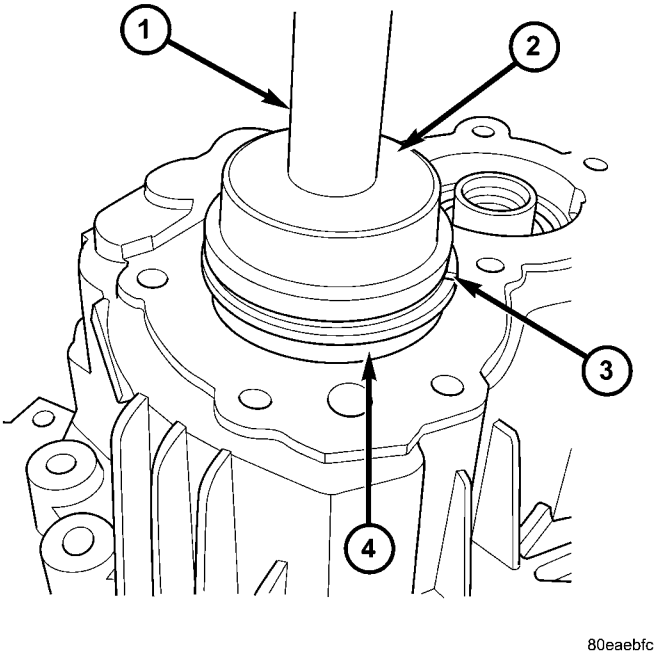

Fig. 69 Install Input Shaft Roller Bearing

1 - TOOL C-4171
2 - TOOL 8871
3 - SNAP RING
4 - BEARING

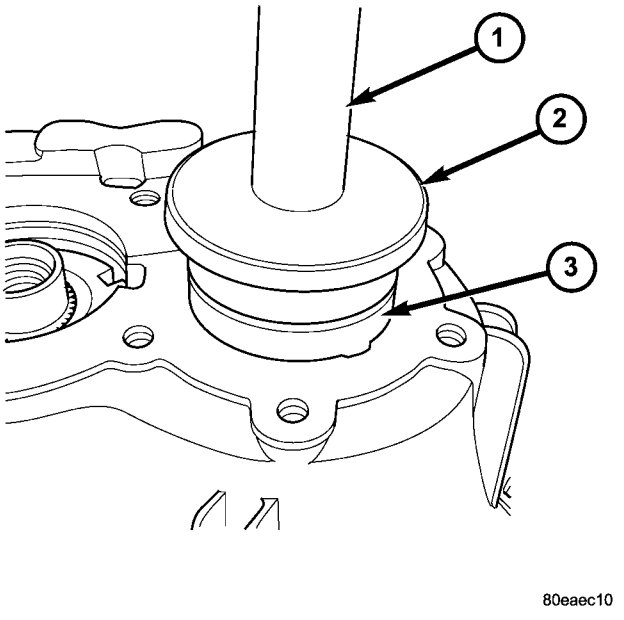

Fig. 70 Install Output Shaft Bearing

1 - TOOL C-4171
2 - TOOL 8871
3 - BEARING

G288 MANUAL TRANSAXLE (Continued)

(11) Engage fifth and reverse gears as shown in (Fig. 71) (Fig. 72).

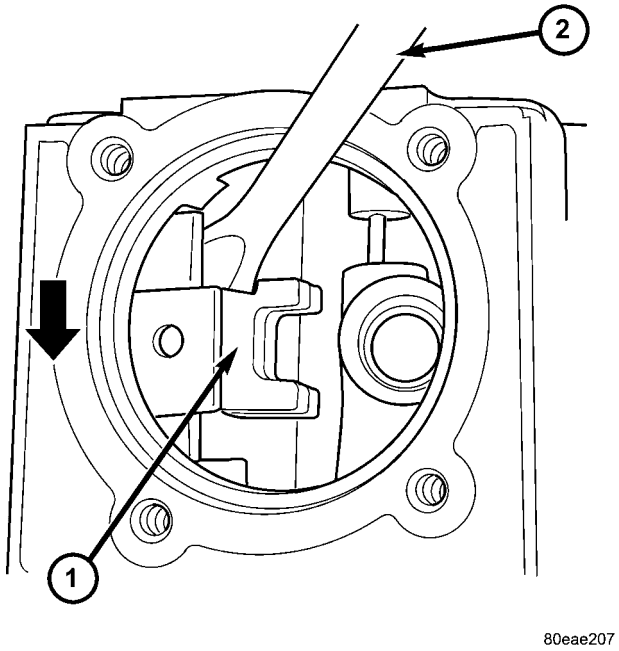

Fig. 71 Engage Fifth Gear

1 - FIFTH GEAR FORK
2 - SCREWDRIVER

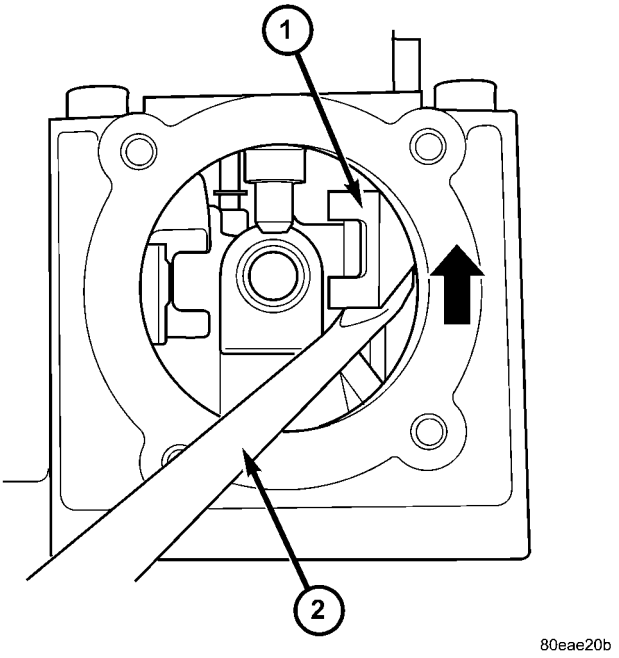

Fig. 72 Engage Reverse Gear

1 - REVERSE GEAR FORK
2 - SCREWDRIVER

(12) Install **new** bearing retainer screws and torque to 90-100 N·m (66-74 ft. lbs.) (Fig. 73).

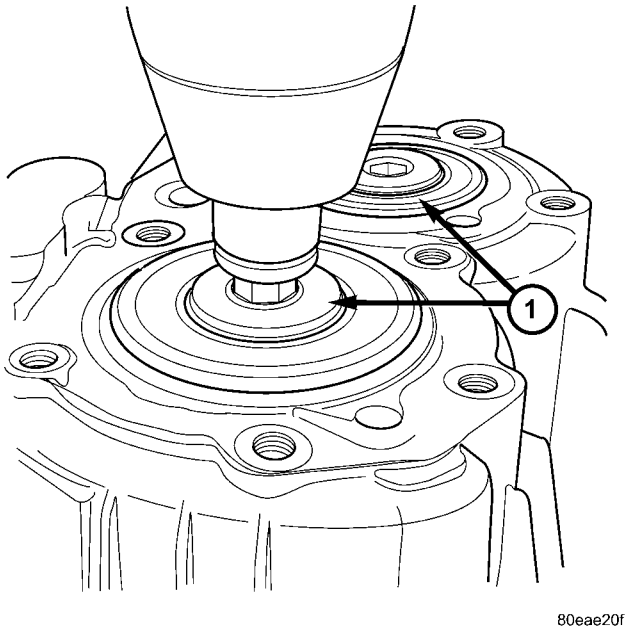

Fig. 73 Bearing Retaining Screws

1 - RETAINING SCREWS (2)

(13) Install input and output shaft oil diverters as shown in (Fig. 74) (Fig. 75).

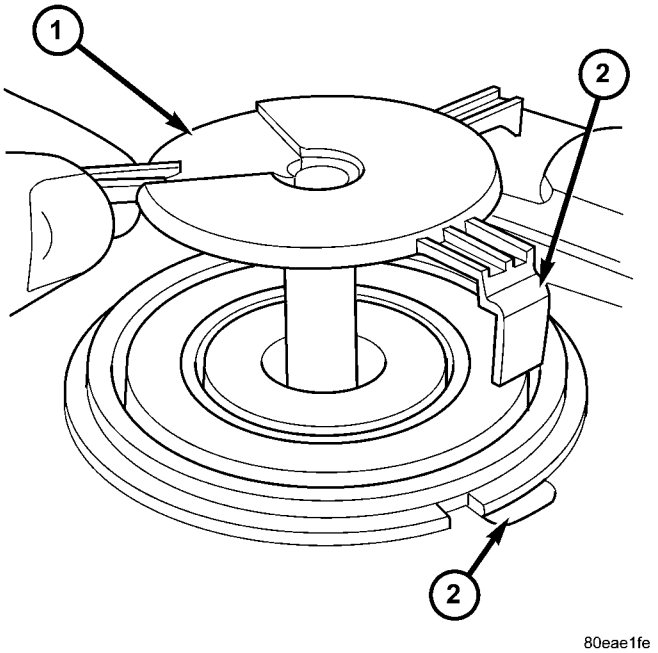

Fig. 74 Input Shaft Oil Diverter

1 - DIVERTER
2 - LOCATING PROVISIONS

G288 MANUAL TRANSAXLE (Continued)

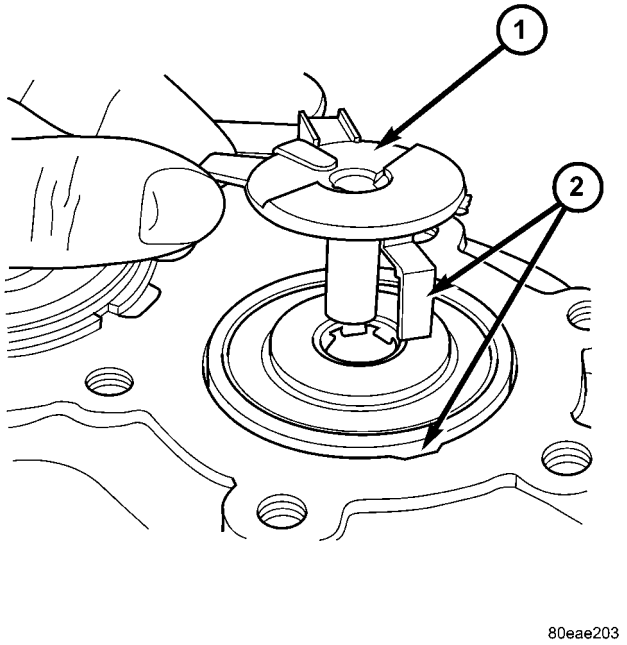

Fig. 75 Output Shaft Oil Diverter

1 - DIVERTER
2 - LOCATOR PROVISIONS

(14) Install a bead of Mopar® Gear Sealant RTV to geartrain housing as shown in (Fig. 76).

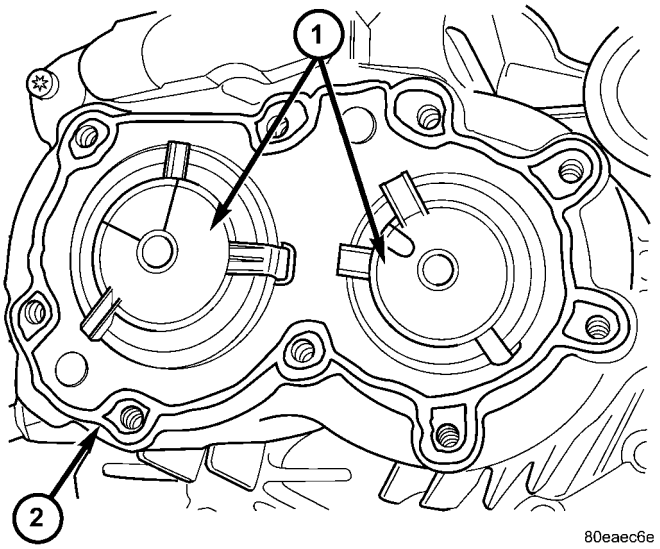

Fig. 76 Proper Sealer Application

1 - OIL DIVERTERS
2 - SEALER BEAD

(15) Install a bead of Mopar® Gear Sealant RTV to end cover as shown in (Fig. 77).

(16) Immediately install end cover to geartrain housing. Install and torque nine (9) bolts to 20-25 N·m (15-18 ft. lbs.) (Fig. 78).

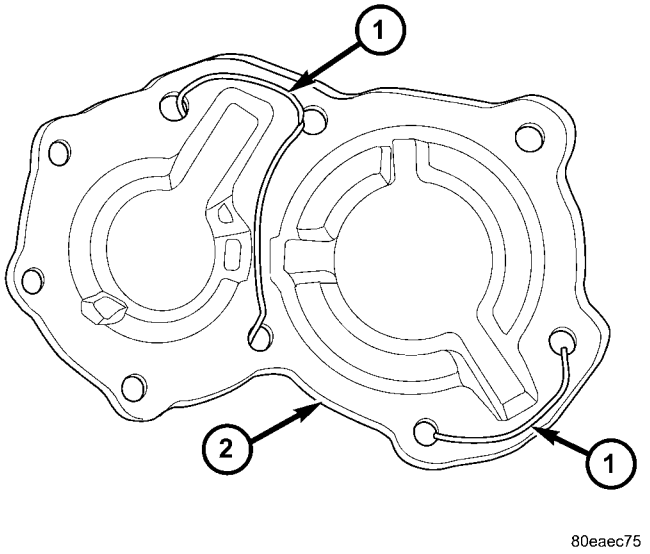

Fig. 77 Apply Sealer to Cover

1 - SEALER BEAD
2 - END COVER

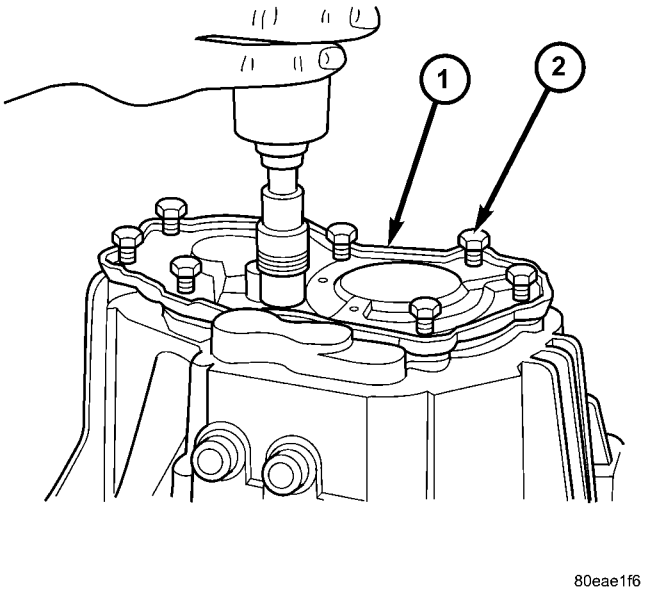

Fig. 78 End Cover-to-Case Bolts

1 - END COVER
2 - BOLT (9)

G288 MANUAL TRANSAXLE (Continued)

(17) Install bead of Mopar® Gasket Maker or Omnifit FD-1664 to shift shaft assy mounting pad as shown in (Fig. 79).

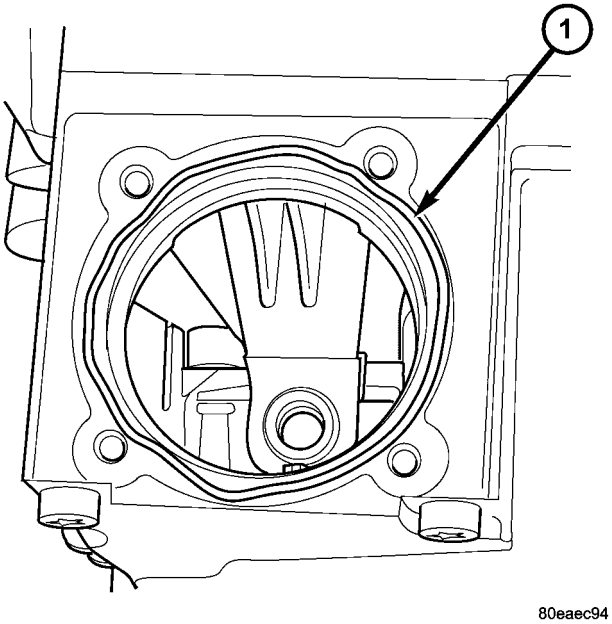

Fig. 79 Apply Sealer to Shift Shaft Mounting Location

1 - SEALER BEAD

NOTE: When installing shift shaft assembly, do not handle assembly by counterweight.

(18) Install shift shaft assembly. Use caution when installing. It is necessary to guide slot in shaft assembly over locating pin which is pressed into case.

(19) Install crossover lever assembly and four (4) bolts (Fig. 80). Torque shift shaft-to-geartrain housing bolts to 20-25 N·m (15-18 ft. lbs.).

(20) Install shift shaft crossover detent pin, spring, and plug. Torque plug to 20 N·m (15 ft. lbs.) (Fig. 81).

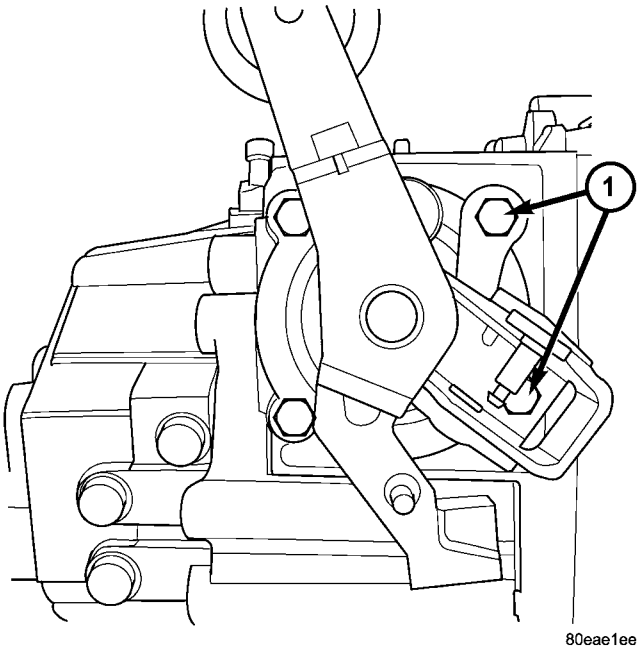

Fig. 80 Shift Shaft-to-Case Bolts

1 - BOLT (4)

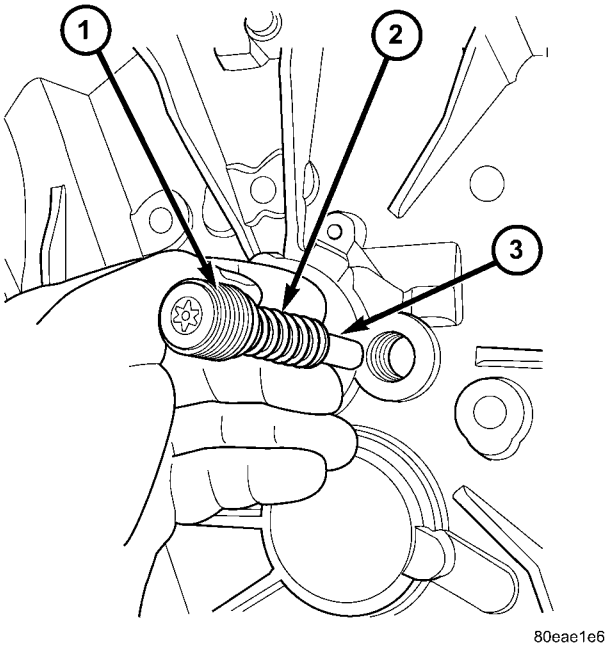

Fig. 81 Shift Shaft Crossover Detent Components

1 - PLUG
2 - SPRING
3 - PIN

G288 MANUAL TRANSAXLE (Continued)

(21) Install shift shaft selector detent assembly with Mopar® Lock 'n Seal™ (Fig. 82). Torque detent assembly 20-25 N·m (15-18 ft. lbs.).

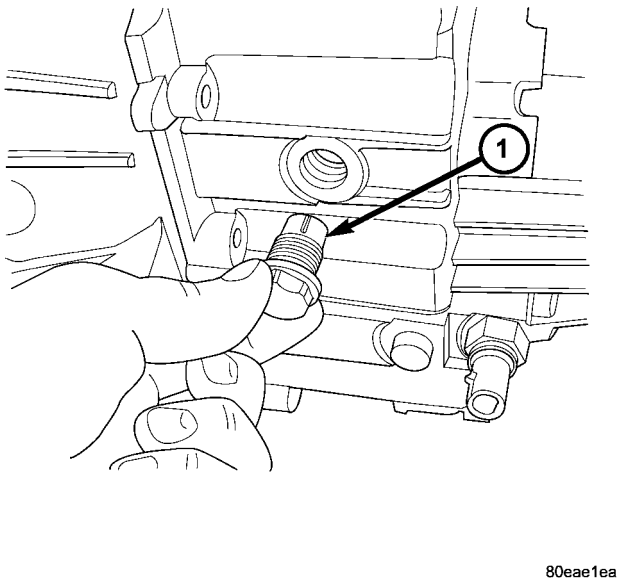

Fig. 82 Shift Shaft Detent Assembly

1 - DETENT ASSEMBLY

(22) Install back-up lamp switch (Fig. 83). Torque switch to 24 N·m (18 ft. lbs.).

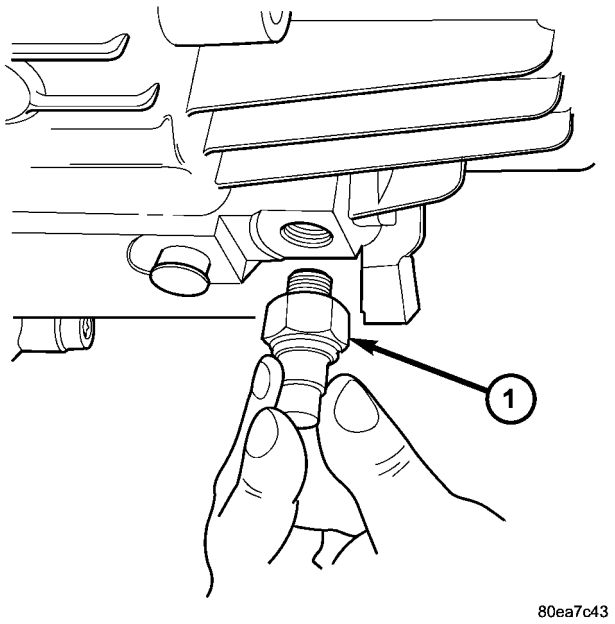

Fig. 83 Backup Lamp Switch

1 - BACKUP LAMP SWITCH

(23) Install four (4) shift rod detent plugs. **Install new plugs as necessary.** Tap into place using a soft-tipped hammer (Fig. 84).

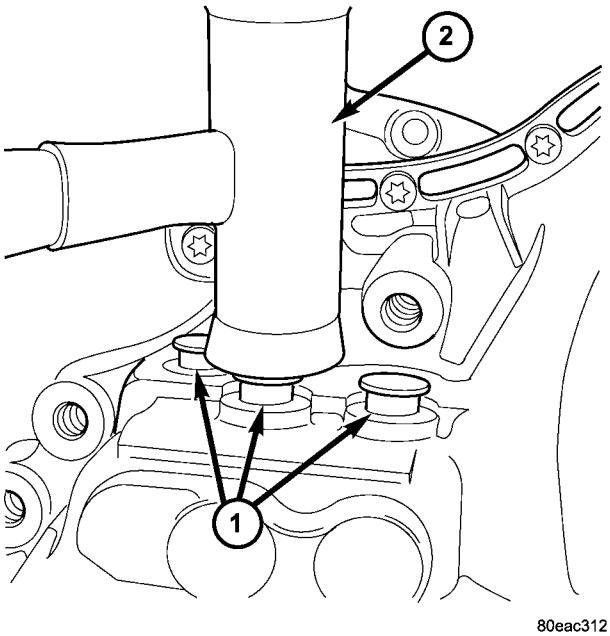

Fig. 84 Seat with Soft-Tipped Hammer

1 - DETENT PLUG
2 - SOFT-TIPPED HAMMER

(24) Install input shaft seal using Tool 8864 (Fig. 85).

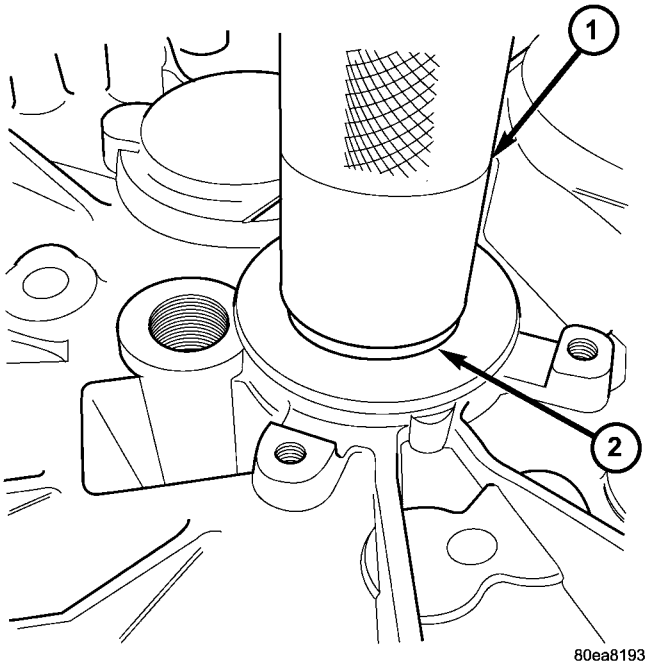

Fig. 85 Input Shaft Seal Installation

1 - TOOL 8864
2 - SEAL, INPUT SHAFT

G288 MANUAL TRANSAXLE (Continued)

(25) Install output (axle) shaft seals (Fig. 86) using Tool 9064 and Driver Handle C-4171.

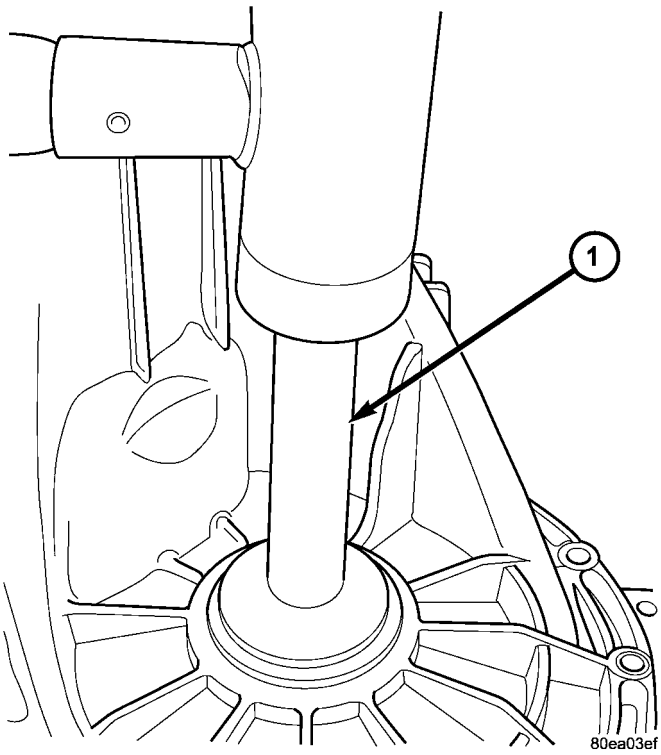

Fig. 86 Axle Seal Installation

1 - TOOL 8916

(26) Install concentric slave cylinder (Fig. 87). Torque bolts in three passes to specified torque. (Refer to 21 - TRANSMISSION/TRANSAXLE/MANUAL - SPECIFICATIONS)

INSTALLATION

INSTALLATION—2.2L TURBO DIESEL

(1) Install transaxle to transmission jack and secure. Raise transaxle into position and install to engine.

(2) Install accessible bellhousing-to-block bolts.

(3) Install transaxle upper mount bracket (Fig. 88).

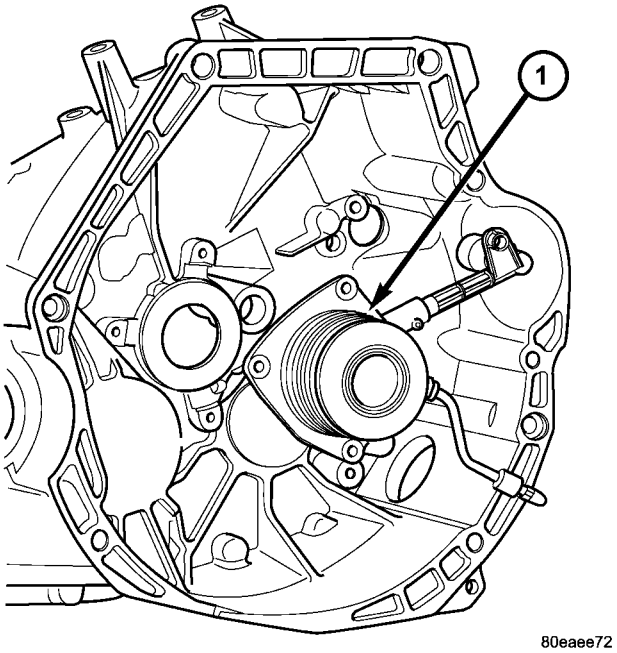

Fig. 87 CSC Removal/Installation

1 - CONCENTRIC SLAVE CYLINDER (CSC)

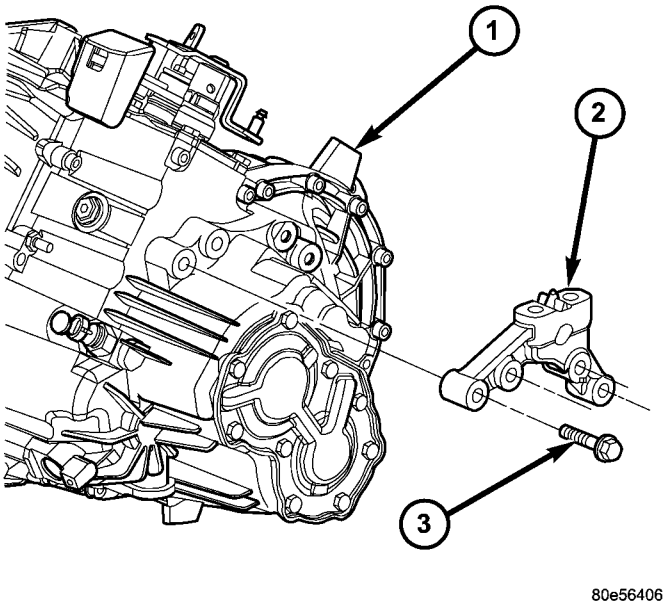

Fig. 88 Transaxle Upper Mount Bracket

1 - TRANSAXLE
2 - BRACKET
3 - BOLT

G288 MANUAL TRANSAXLE (Continued)

(4) Raise transaxle with jack until mount bracket pilots into upper mount. Access engine compartment. Install and torque upper mount-to-transaxle bracket bolts (Fig. 89).

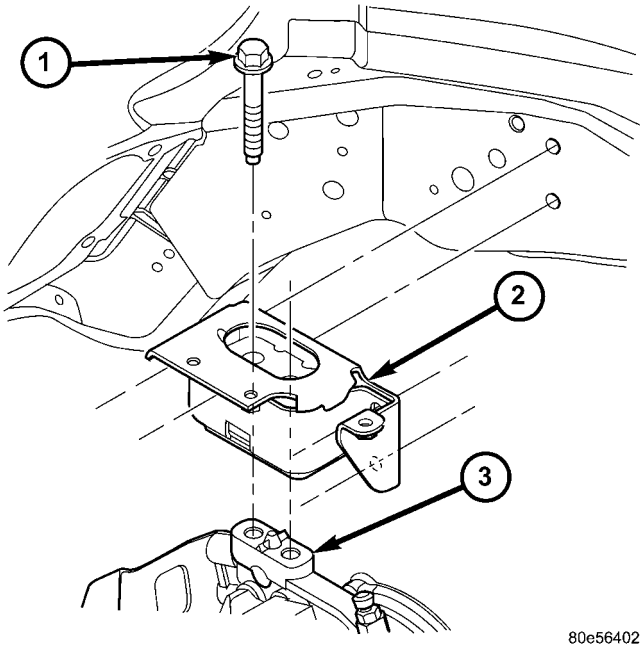

Fig. 89 Upper Mount-to-Bracket

1 - BOLT (2)
2 - MOUNT
3 - BRACKET

(5) Remove transmission jack.

(6) Install starter motor into position. Install ground cable and lower starter mounting bolt (Fig. 90).

(7) Install lower bellhousing bolt.

(8) Install two (2) intercooler connector pipe-to-engine oil pan bolts (Fig. 91).

(9) Remove transaxle fill plug and add suitable amount of ATF+4 (Automatic Transmission Fluid—Type 9602). Torque fill plug to 39-47 N·m (29-35 ft. lbs.). (Refer to 21 - TRANSMISSION/TRANSAXLE/MANUAL/FLUID - STANDARD PROCEDURE)

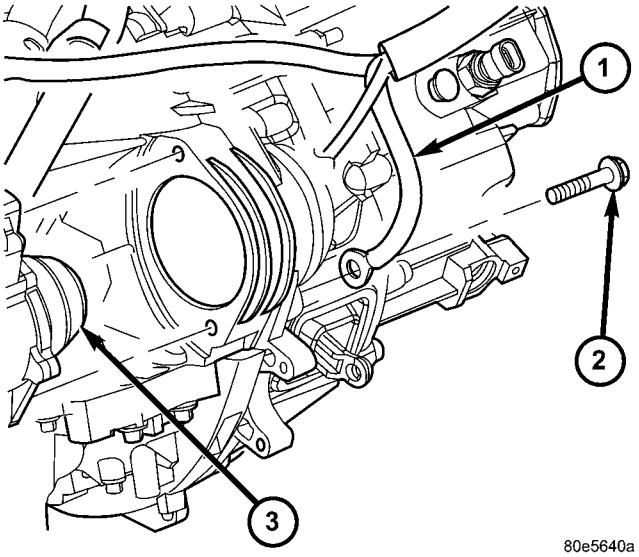

Fig. 90 Starter Bolt and Ground Cable

1 - GROUND CABLE
2 - BOLT
3 - STARTER MOTOR

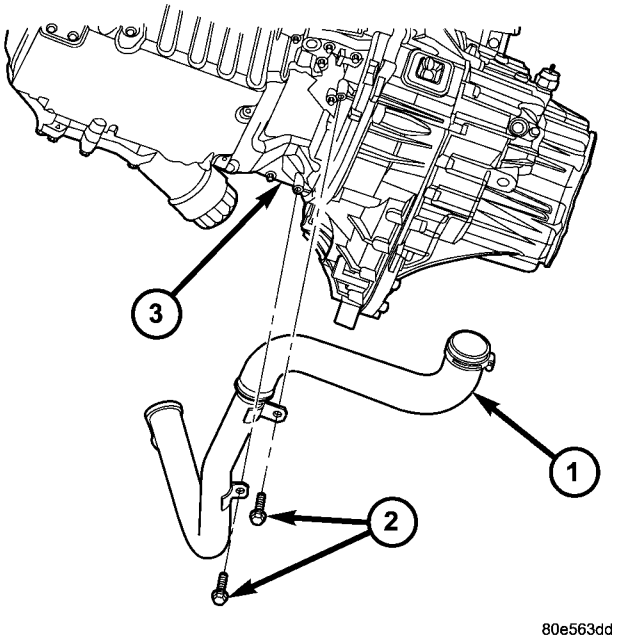

Fig. 91 Intercooler Inlet Hose Fasteners

1 - INTERCOOLER INLET HOSE
2 - SCREW (2)
3 - STRUCTURAL COLLAR

G288 MANUAL TRANSAXLE (Continued)

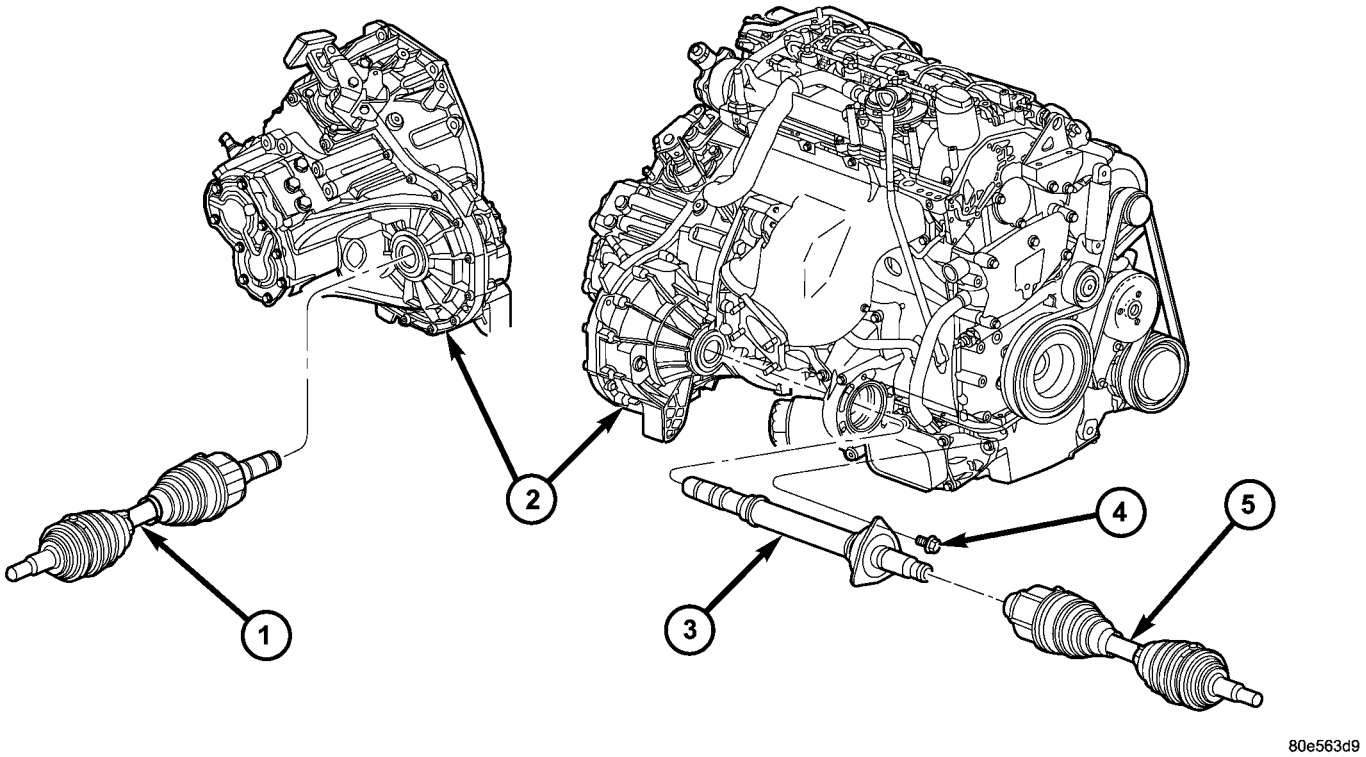

Fig. 92 Halfshaft and Intermediate Shaft

1 - HALFSHAFT (LH)
2 - TRANSAXLE
3 - INTERMEDIATE SHAFT
4 - BOLT (3)
5 - HALFSHAFT (RH)

(10) Install intermediate shaft/bearing assembly into position. Install and torque bearing-to-retainer bolts (Fig. 92).

(11) Install halfshafts.

(12) Lower vehicle.

(13) Connect clutch hydraulic plumbing to slave cylinder quick-connect (Fig. 93). An audible “click” should be heard. Verify connection by pulling outward.

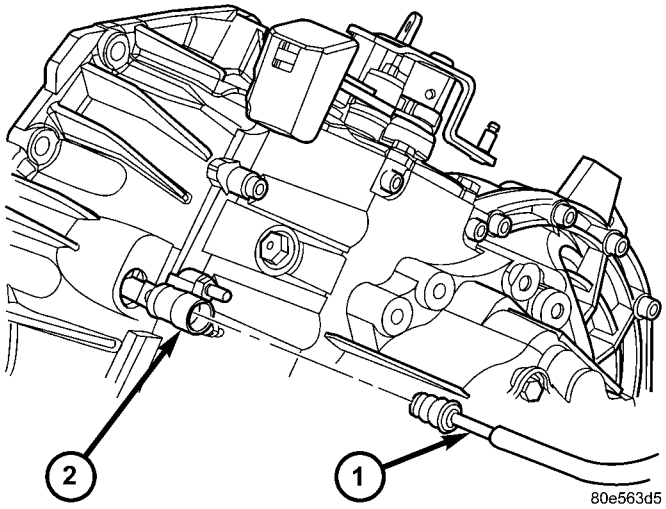

Fig. 93 Clutch Slave Cylinder Hydraulic Connection

1 - MASTER CYLINDER TUBE
2 - SLAVE CYLINDER

G288 MANUAL TRANSAXLE (Continued)

(14) Connect vehicle speed sensor connector (Fig. 94).

(15) Connect back-up lamp switch connector (Fig. 94).

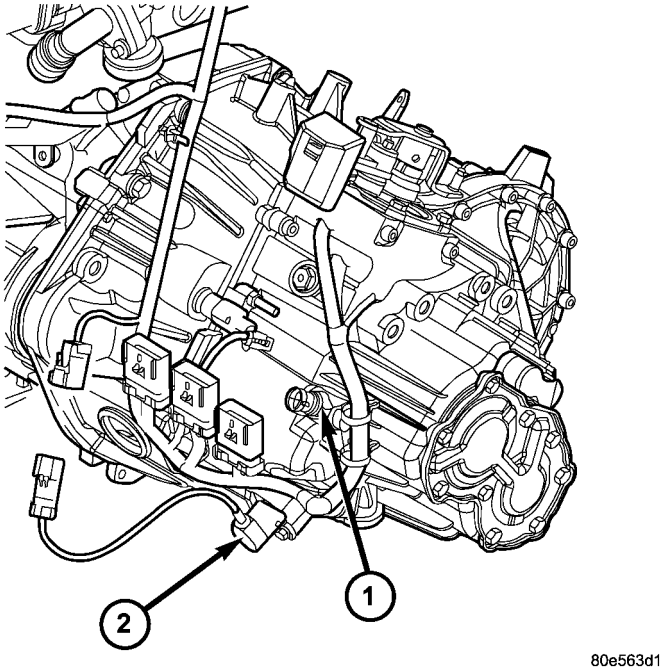

Fig. 94 VSS and Back-Up Lamp Switches

1 - BACK-UP LAMP SWITCH
2 - VEHICLE SPEED SENSOR (VSS)

(16) Install power steering reservoir into position and torque bolts (Fig. 95).

(17) Install gearshift cable bracket and torque bolts (Fig. 96).

(18) Install gearshift crossover and selector cables to transaxle shift mechanism. Secure to cable bracket with NEW retainer clips (Fig. 96).

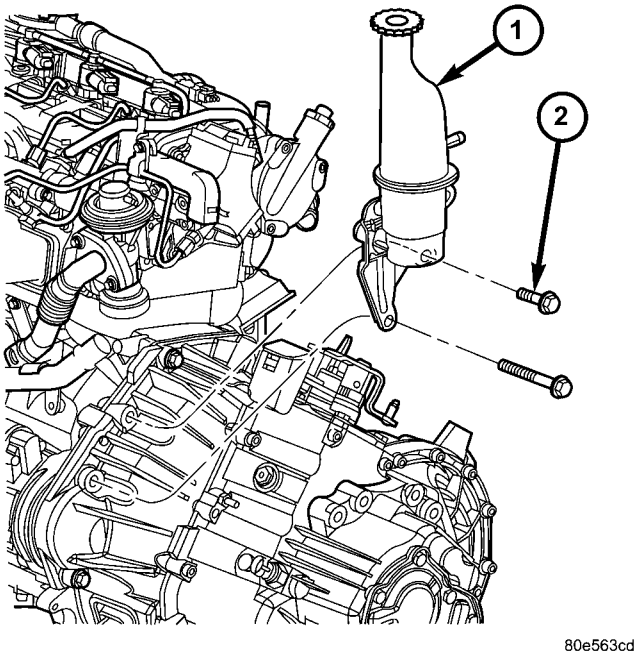

Fig. 95 Power Steering Reservoir

1 - RESERVOIR
2 - BOLT

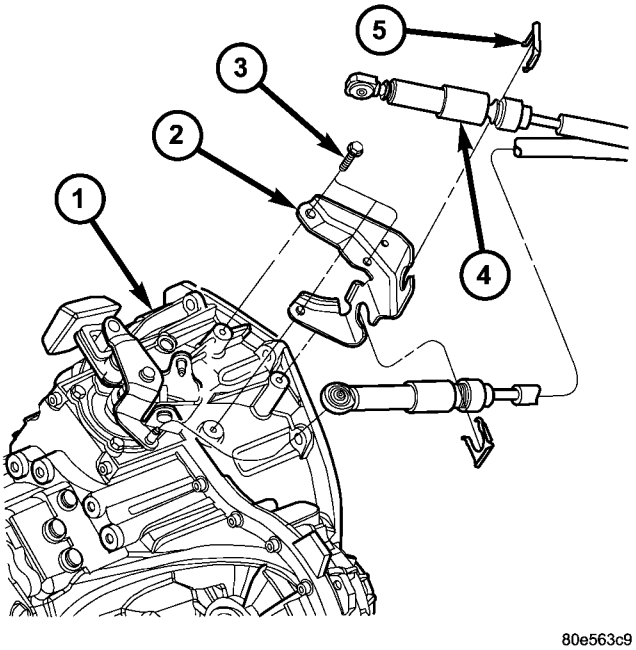

Fig. 96 Gear Shift Cables and Bracket at Transaxle

1 - TRANSAXLE
2 - GEAR SHIFT CABLE BRACKET
3 - BOLT (3)
4 - CABLE ASSEMBLY
5 - RETAINER (2)

G288 MANUAL TRANSAXLE (Continued)

(19) Install PDC/air cleaner assembly bracket (Fig. 97).

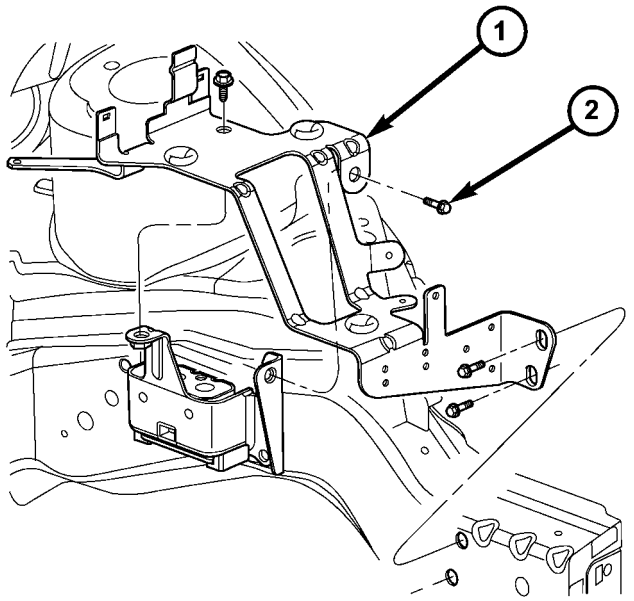

Fig. 97 Air Cleaner/PDC Bracket

1 - BRACKET
2 - BOLT (4)

(20) Install PDC into position.
(21) Install air cleaner assembly (Fig. 98).
(22) Connect battery negative cable.

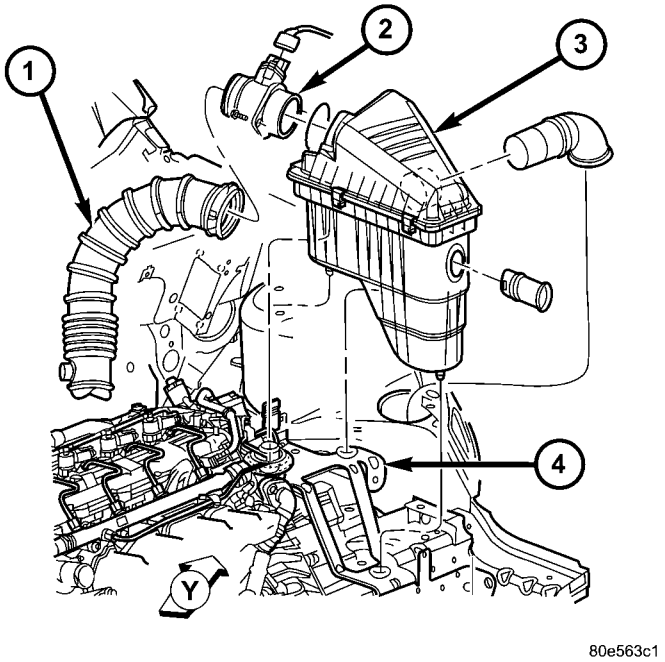

Fig. 98 Air Cleaner Assembly

1 - DUCT
2 - MASS AIR FLOW SENSOR
3 - AIR CLEANER ASSEMBLY
4 - BRACKET

INSTALLATION—2.4L TURBO

(1) Install transaxle to transmission jack and secure. Raise transaxle into position and install to engine.

(2) Install accessible bellhousing-to-block bolts and torque to 108 N·m (80 ft. lbs.) torque (Fig. 99).

(3) Install four (4) modular clutch-to-driveplate bolts. Align drive plate and modular clutch alignment marks placed upon disassembly. Start with tight-tolerance (slotted) hole (Fig. 100), install and torque bolts to 88 N·m (65 ft. lbs.) torque.

(4) Install transaxle upper mount bracket (Fig. 101).

G288 MANUAL TRANSAXLE (Continued)

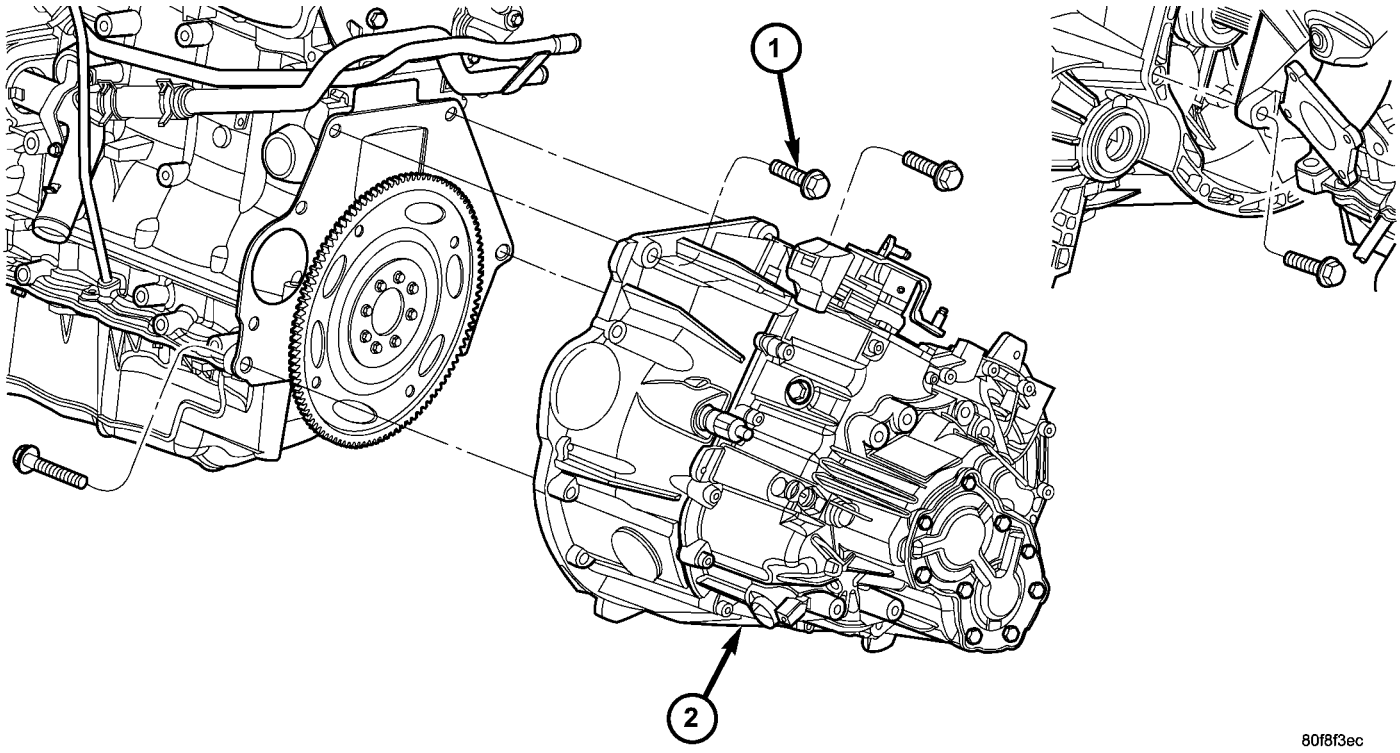

Fig. 99 Transaxle Removal/Installation

1 - BOLT (4)
2 - G288 TRANSAXLE

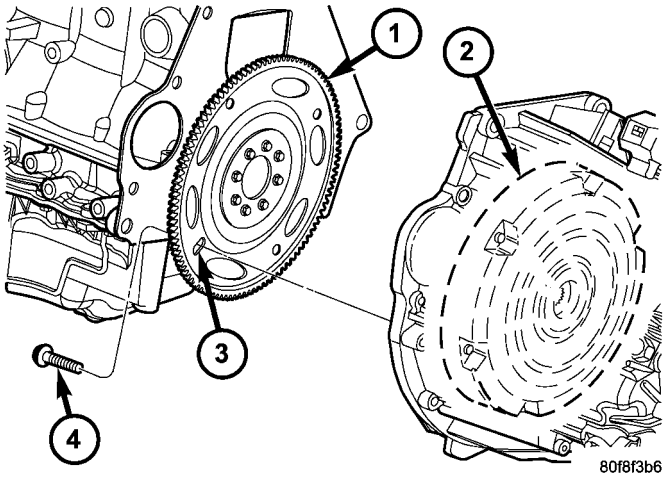

Fig. 100 Modular Clutch-to-Driveplate Bolts

1 - DRIVEPLATE
2 - MODULAR CLUTCH ASSEMBLY
3 - TIGHT TOLERANCE HOLE
4 - BOLT (4)

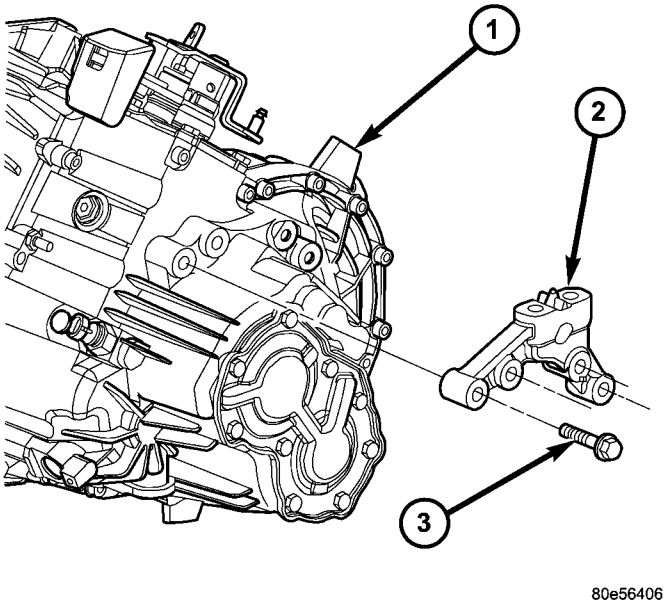

Fig. 101 Transaxle Upper Mount Bracket

1 - TRANSAXLE
2 - BRACKET
3 - BOLT

G288 MANUAL TRANSAXLE (Continued)

(5) Raise transaxle with jack until mount bracket pilots into upper mount. Access engine compartment. Install and torque upper mount-to-transaxle bracket bolts (Fig. 102).

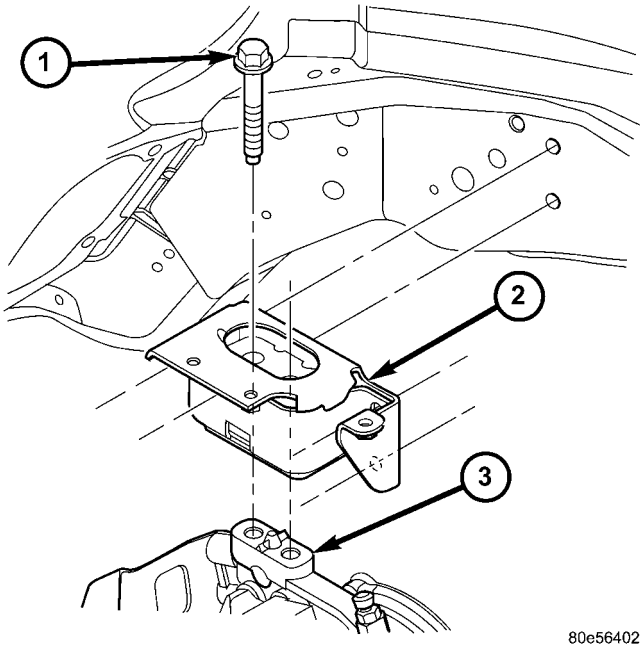

Fig. 102 Upper Mount-to-Bracket

1 - BOLT (2)
2 - MOUNT
3 - BRACKET

(6) Remove transmission jack.

(7) Install starter motor into position. Install ground cable and lower starter mounting bolt (Fig. 103).

(8) Install lower bellhousing bolt.

(9) Install two (2) intercooler connector pipe-to-engine oil pan bolts (Fig. 104).

(10) Remove transaxle fill plug and add suitable amount of ATF+4 (Automatic Transmission Fluid—Type 9602). Torque fill plug to 39-47 N·m (29-35 ft. lbs.). (Refer to 21 - TRANSMISSION/TRANSAXLE/MANUAL/FLUID - STANDARD PROCEDURE)

(11) Install intermediate shaft/bearing assembly into position. Install and torque bearing-to-retainer bolts (Fig. 105).

(12) Install halfshafts (Refer to 3 - DIFFERENTIAL & DRIVELINE/HALF SHAFT - INSTALLATION).

(13) Lower vehicle.

(14) Connect clutch hydraulic plumbing to slave cylinder quick-connect (Fig. 106). An audible “click” should be heard. Verify connection by pulling outward.

(15) Connect vehicle speed sensor connector (Fig. 107).

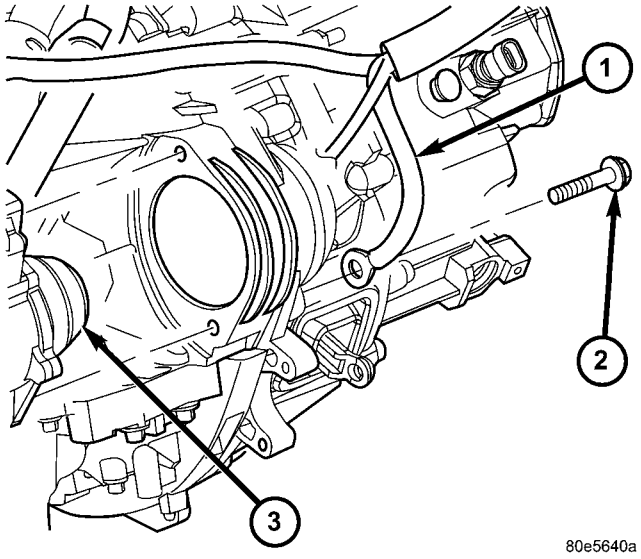

Fig. 103 Starter Bolt and Ground Cable

1 - GROUND CABLE
2 - BOLT
3 - STARTER MOTOR

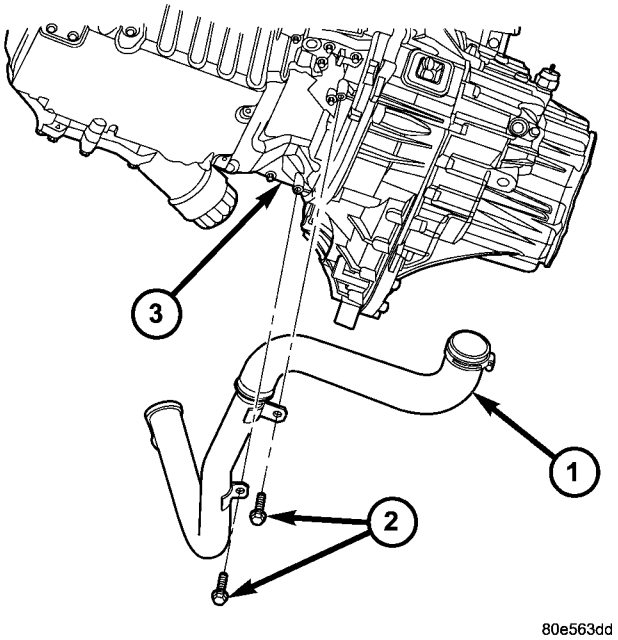

Fig. 104 Intercooler Inlet Hose Fasteners

1 - INTERCOOLER INLET HOSE
2 - SCREW (2)
3 - STRUCTURAL COLLAR

(16) Connect back-up lamp switch connector (Fig. 107).

G288 MANUAL TRANSAXLE (Continued)

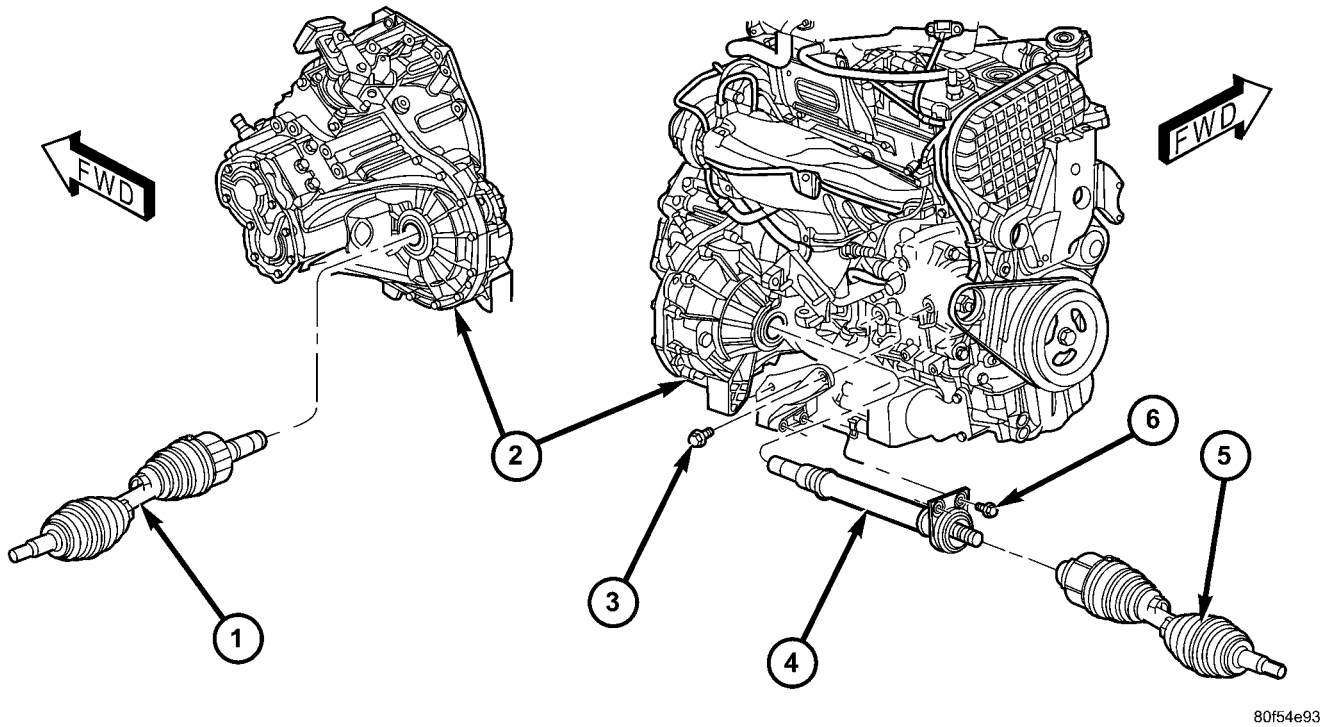

Fig. 105 Halfshaft and Intermediate Shaft

1 - HALFSHAFT (LH)
2 - TRANSAXLE
3 - BOLT
4 - INTERMEDIATE SHAFT
5 - HALFSHAFT (RH)
6 - BOLT (2)

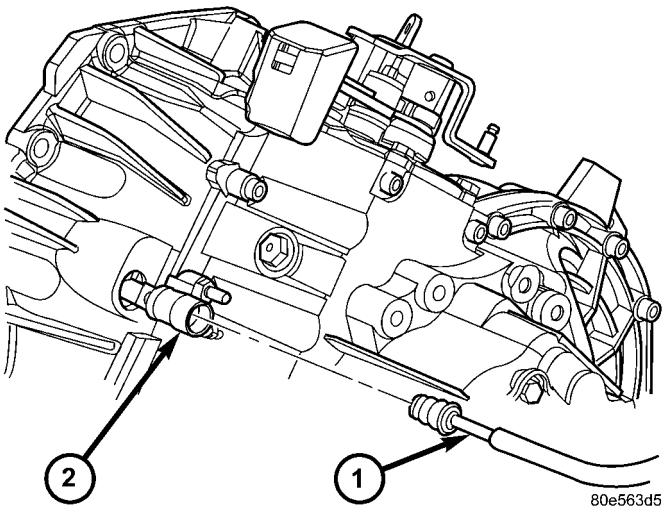

Fig. 106 Clutch Slave Cylinder Hydraulic Connection

1 - MASTER CYLINDER TUBE
2 - SLAVE CYLINDER

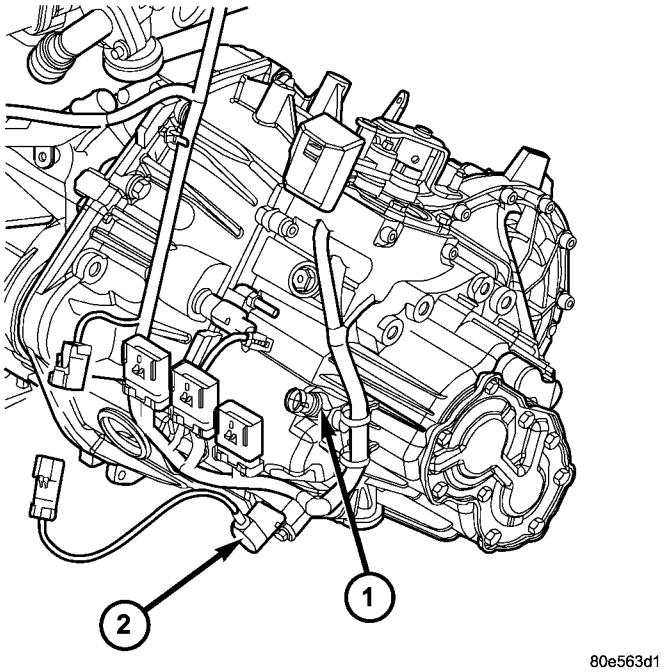

Fig. 107 VSS and Back-Up Lamp Switches

1 - BACK-UP LAMP SWITCH
2 - VEHICLE SPEED SENSOR (VSS)

G288 MANUAL TRANSAXLE (Continued)

(17) Install gearshift cable bracket and torque bolts (Fig. 108).

(18) Install gearshift crossover and selector cables to transaxle shift mechanism. Secure to cable bracket with NEW retainer clips (Fig. 108).

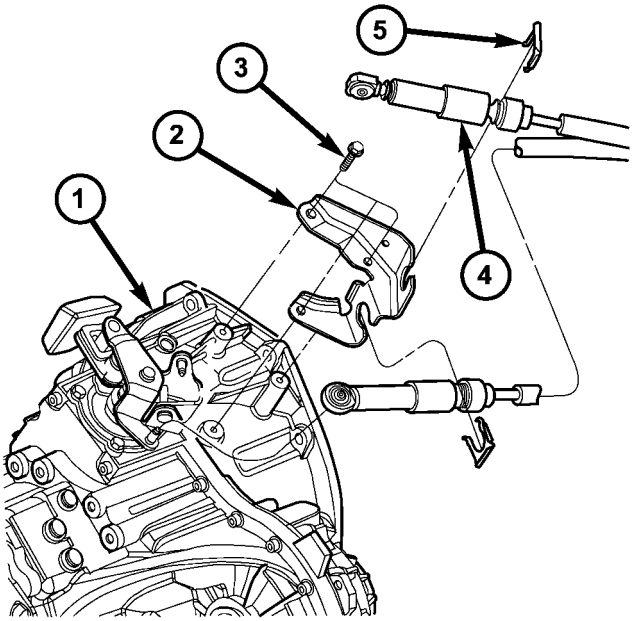

Fig. 108 Gear Shift Cables and Bracket at Transaxle

1 - TRANSAXLE
2 - GEAR SHIFT CABLE BRACKET
3 - BOLT (3)
4 - CABLE ASSEMBLY
5 - RETAINER (2)

(19) Install PDC/air cleaner assembly bracket (Fig. 109).

(20) Install PDC into position.

(21) Install air cleaner assembly (Fig. 110).

(22) Connect battery negative cable.

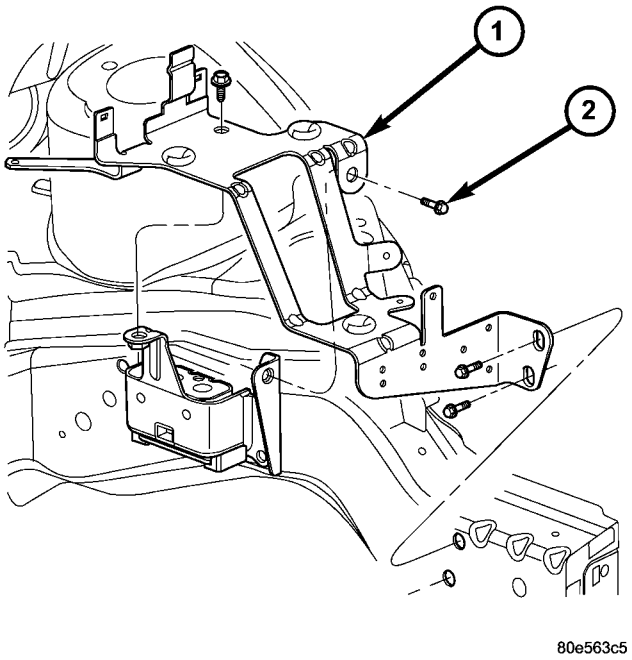

Fig. 109 Air Cleaner/PDC Bracket

1 - BRACKET
2 - BOLT (4)

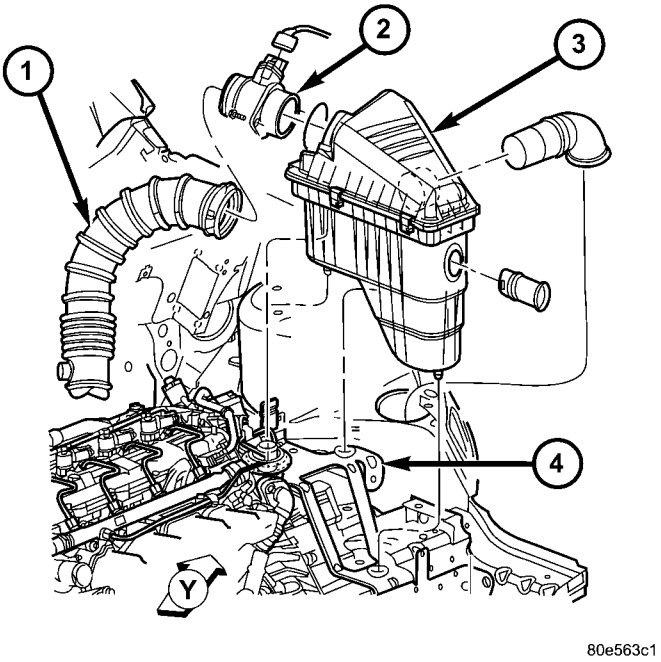

Fig. 110 Air Cleaner Assembly

1 - DUCT
2 - MASS AIR FLOW SENSOR
3 - AIR CLEANER ASSEMBLY
4 - BRACKET

G288 MANUAL TRANSAXLE (Continued)

SPECIFICATIONS

GENERAL SPECIFICATIONS

DESCRIPTION	SPECIFICATION
Transaxle Type	Constant-mesh, fully synchronized five speed with integral differential
Lubrication Method	Splash oil collected in oil troughs and distributed to mainshafts via gravity
Fluid Type	ATF+4 (Automatic Transmission Fluid)
Fluid Capacity	**2.2L Turbo Diesel:** 2.0L (2.1 qts.)
	2.4L Turbo: 1.8L (1.9 qts.)

GEAR RATIOS

GEAR	RATIO	
	2.2L TURBO DIESEL	2.4L TURBO
1ST	4.25	3.92
2ND	2.35	2.21
3RD	1.46	1.46
4TH	1.03	1.11
5TH	0.79	0.88
REVERSE	3.81	3.62
Final Drive Ratio (FDR)	3.29	3.29

INPUT SHAFT

BLOCKER RING WEAR GAP	
3RD GEAR	0.74-1.64 mm (0.029-0.065 in.)
4TH GEAR	0.81-1.59 mm (0.032-0.063 in.)
5TH GEAR	0.79-1.62 mm (0.031-0.064 in.)

OUTPUT SHAFT

BLOCKER RING WEAR GAP	
1ST GEAR	0.86-2.19 mm (0.034-0.086 in)
2ND GEAR	0.82-2.19 mm (0.032-0.086 in.)

REVERSE SHAFT

BLOCKER RING WEAR GAP	
REVERSE GEAR	0.97-1.70 mm (0.038-0.067 in.)

G288 MANUAL TRANSAXLE (Continued)

TORQUE SPECIFICATIONS

DESCRIPTION	N·m	Ft. Lbs.	In. Lbs.
Bolt (4), Concentric Slave Cylinder (CSC)-to-Bellhousing Halve	Step 1 - 2 N·m	—	Step 1 - 18 In. Lbs.
	Step 2 - 5 N·m	—	Step 2 - 44 In. Lbs.
	Step 3 - 8.4 N·m	—	Step 3 - 74 In. Lbs.
Bolt (9), End Cover-to-Case	23	17	—
Bolt (12), Differential Ring Gear-to-Carrier	85	63	—
Bolt (4), Shift Mechanism-to-Case	20-25	15-18	177-221
Bolt (18), Transaxle Case Halve-to-Bellhousing Halve	28	21	—
Detent Assembly, Shift Shaft	20-25	15-18	177-221
Plug, Shift Shaft Crossover Detent	20-25	15-18	177-221
Plug, Transaxle Drain/Fill	39-47	29-35	345-416
Switch, Back-up Lamp	24	18	212

SPECIAL TOOLS

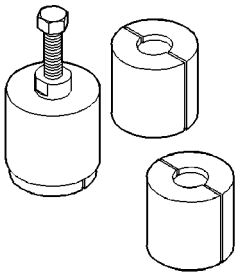

Puller Set, 5048

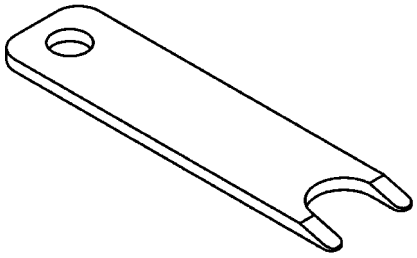

Disconnect Tool, 6638A

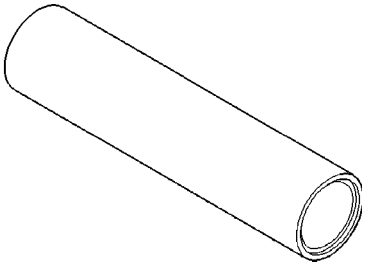

Installer, 6448

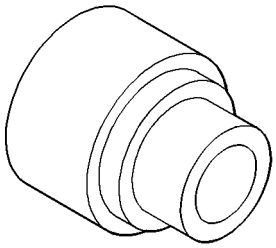

Remover, 6954

G288 MANUAL TRANSAXLE (Continued)

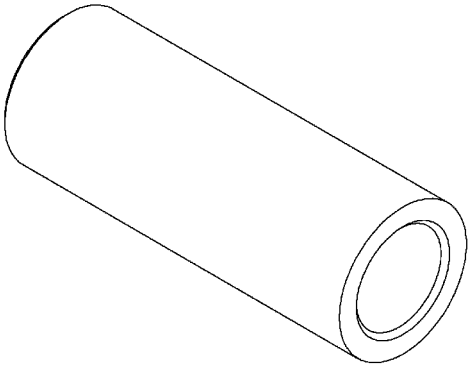

Installer, 8864

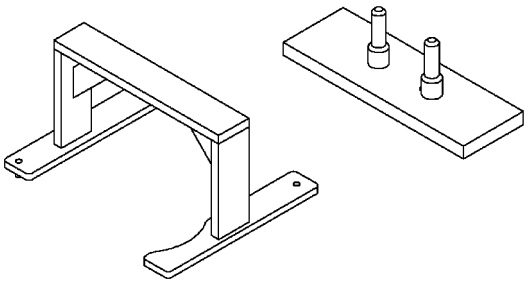

Fixture, 8869

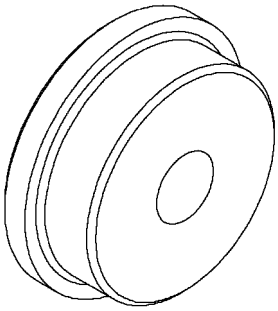

Installer, 8866

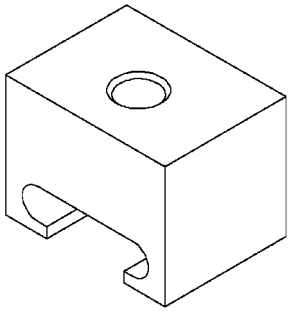

Remover, 8870

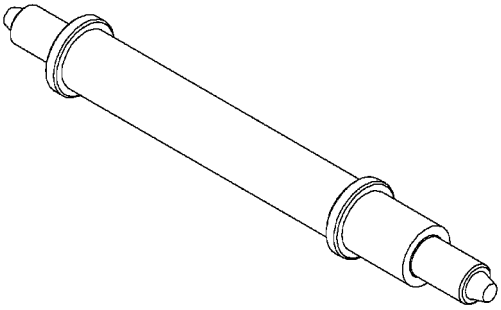

Remover/Installer, 8868

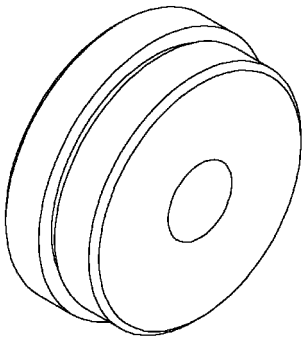

Installer, 8871

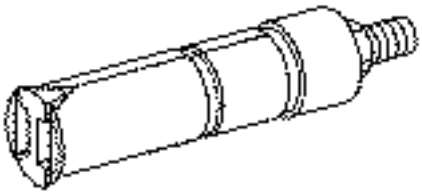

Remover, 8911

G288 MANUAL TRANSAXLE (Continued)

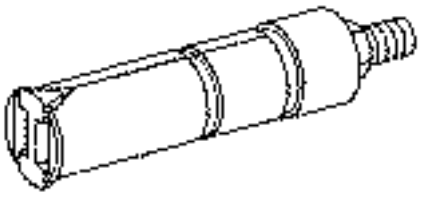

Remover, 8912

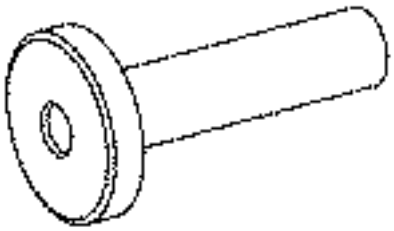

Support Base, 8917

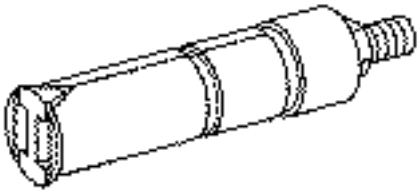

Remover, 8913

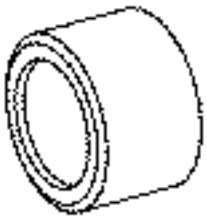

Protect Sleeve, 8918

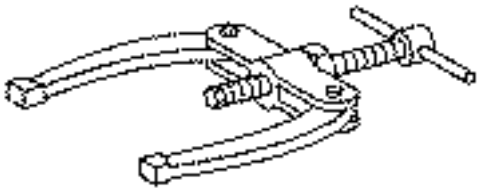

Brace Tool, 8915

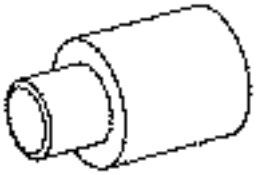

Protect Button, 8919

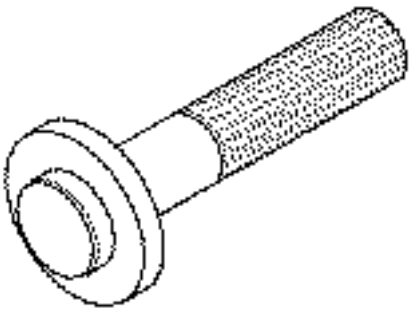

Installer, 8916

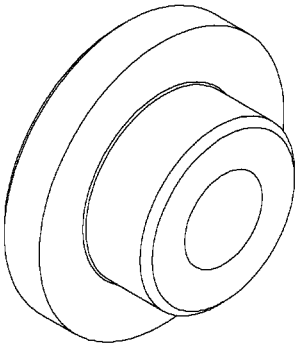

Installer, 8921

G288 MANUAL TRANSAXLE (Continued)

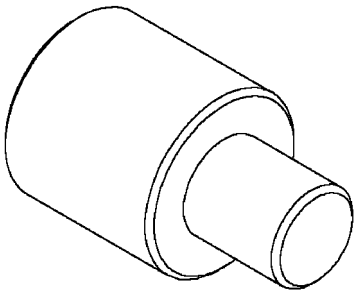

Protector, 8923

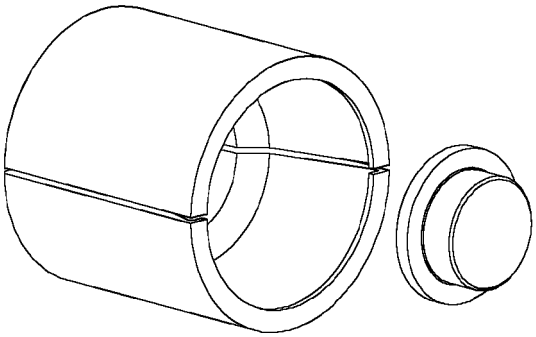

Remover, 8926

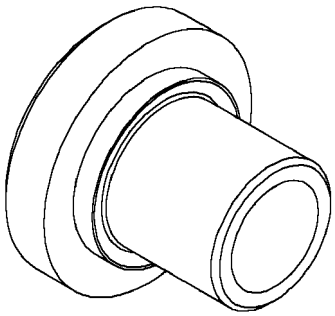

Installer, 8924

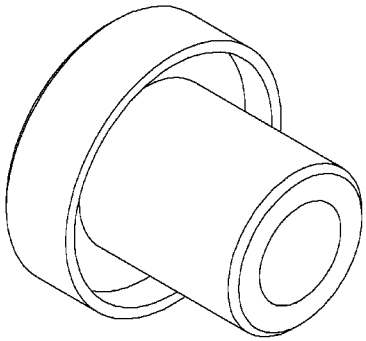

Installer, 8953

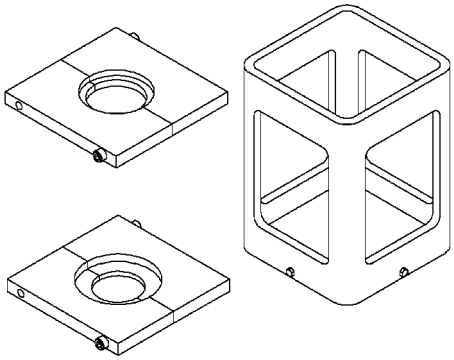

Fixture, 8925

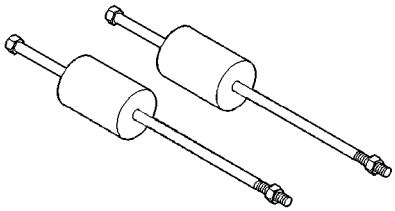

Puller/Slide Hammer, C-3752

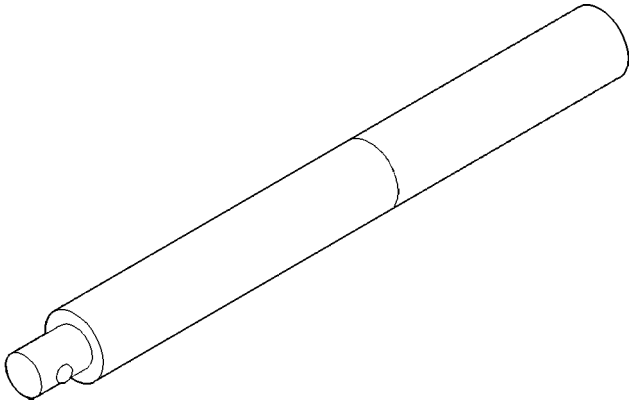

Universal Handle, C-4171

AXLE SEAL

REMOVAL

(1) Raise vehicle on hoist.

(2) Remove halfshaft(s) and intermediate shaft assembly if necessary. (Refer to 3 - DIFFERENTIAL & DRIVELINE/HALF SHAFT - REMOVAL)

(3) Using suitable screwdriver, remove axle seal from transaxle case (Fig. 111). Use care not to damage seal bore.

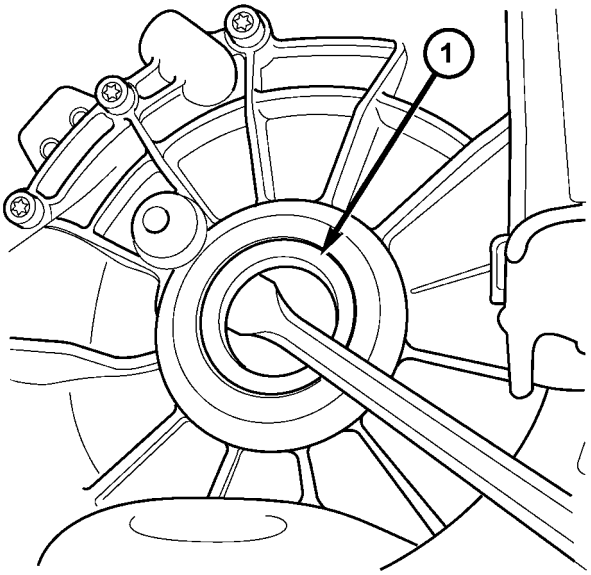

Fig. 111 Axle Seal Removal

1 - AXLE SEAL

INSTALLATION

(1) Using Tool 8916, install new axle seal (Fig. 112). Drive seal until flush with case.

(2) Install halfshaft(s) and intermediate shaft assembly (if removed). (Refer to 3 - DIFFERENTIAL & DRIVELINE/HALF SHAFT - INSTALLATION)

(3) Check transaxle fluid level. (Refer to 21 - TRANSMISSION/TRANSAXLE/MANUAL/FLUID - STANDARD PROCEDURE)

(4) Lower vehicle.

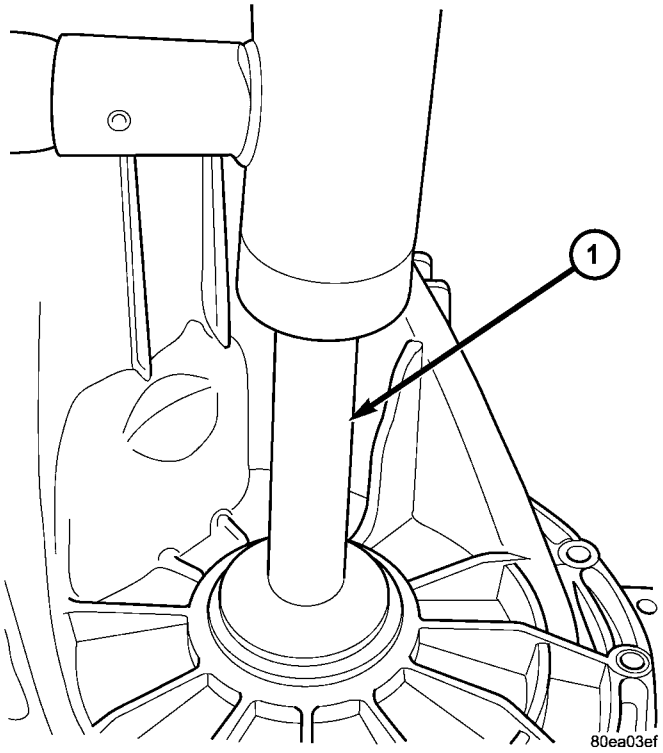

Fig. 112 Axle Seal Installation

1 - TOOL 8916

BACKUP LAMP SWITCH

REMOVAL

(1) Disconnect battery negative cable.

(2) Raise vehicle on hoist.

(3) **Diesel Models:** Remove engine compartment lower silencer (Fig. 113).

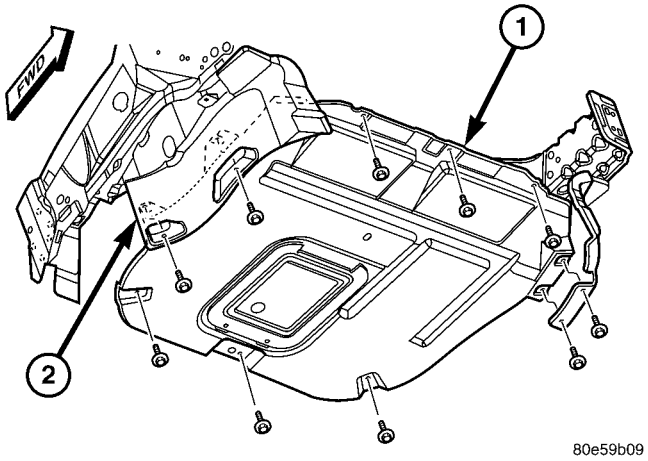

Fig. 113 Engine Compartment Lower Silencer

1 - ENGINE COMPARTMENT SILENCER
2 - ACCESSORY DRIVE BELT SPLASH SHIELD

BACKUP LAMP SWITCH (Continued)

(4) Disconnect backup lamp switch connector.
(5) Remove backup lamp switch (Fig. 114).

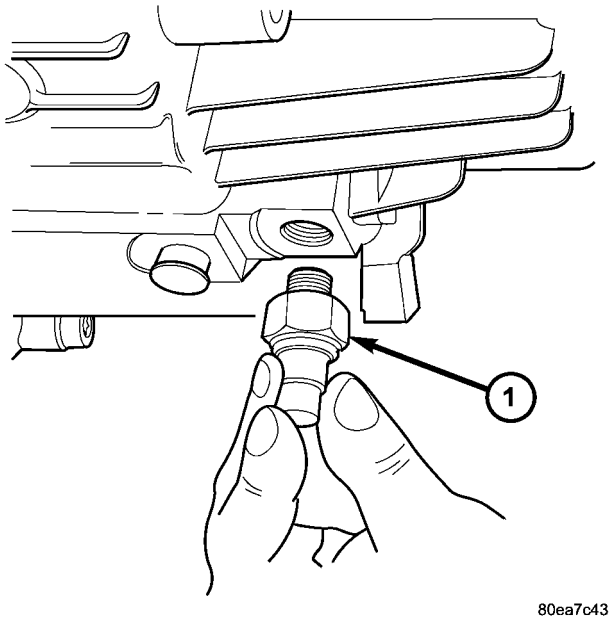

Fig. 114 Backup Lamp Switch

1 - BACKUP LAMP SWITCH

INSTALLATION

(1) Install backup lamp switch and torque to 24 N·m (18 ft. lbs.) (Fig. 114).
(2) Connect backup lamp switch connector.
(3) **Diesel Models:** Install engine compartment lower silencer (Fig. 113).
(4) Lower vehicle.
(5) Connect battery negative cable.

CLUTCH BELLHOUSING

DISASSEMBLY

(1) Using suitable punch/drift, remove input shaft seal (Fig. 115) and discard.
(2) Remove output shaft roller bearing (Fig. 116).
(3) Using Tool 8868, drive out shift shaft needle bearing (Fig. 117) and discard.

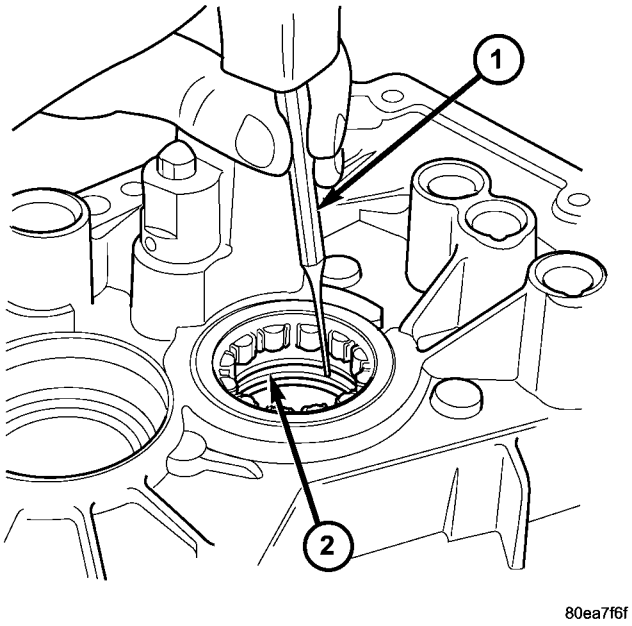

Fig. 115 Input Shaft Seal Removal

1 - DRIFT
2 - SEAL

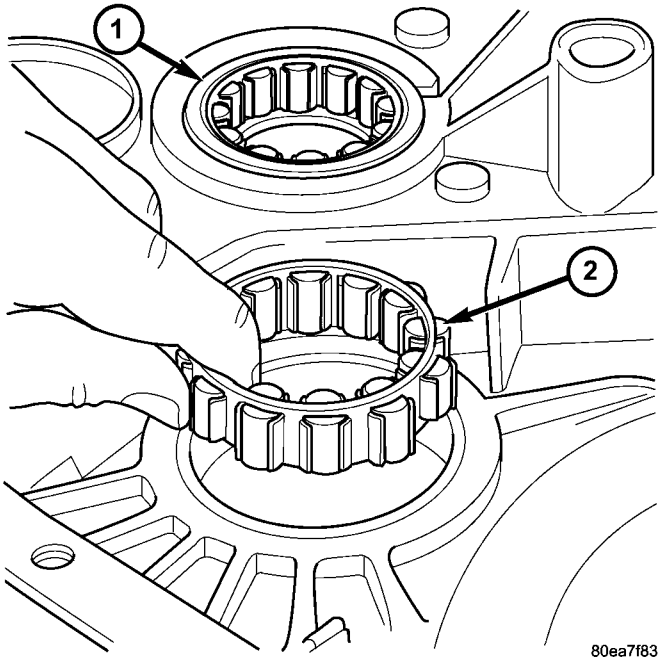

Fig. 116 Output Shaft Bearing Removal

1 - INPUT SHAFT BEARING
2 - OUTPUT SHAFT BEARING

CLUTCH BELLHOUSING (Continued)

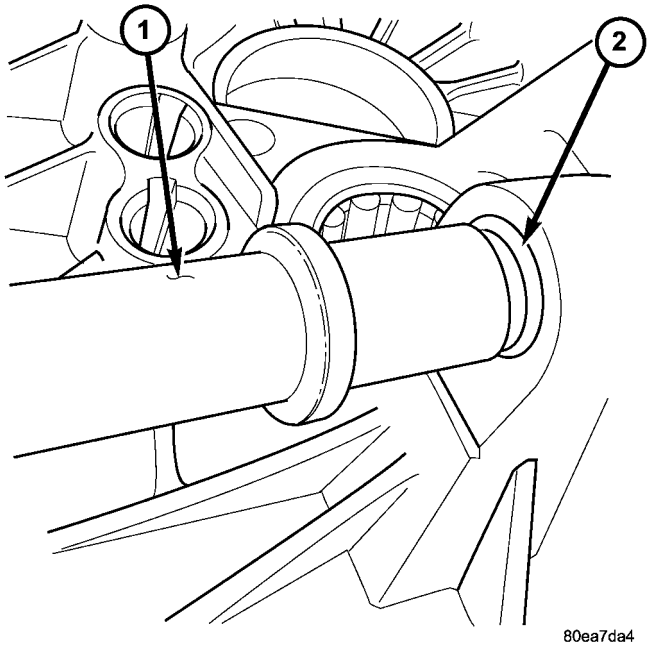

Fig. 117 Shift Shaft Ball Bearing Removal

1 - TOOL 8868
2 - SHIFT SHAFT BALL BEARING

(4) Using Tools 8915 and 8913, remove differential bearing cup from clutch bellhousing (Fig. 118).

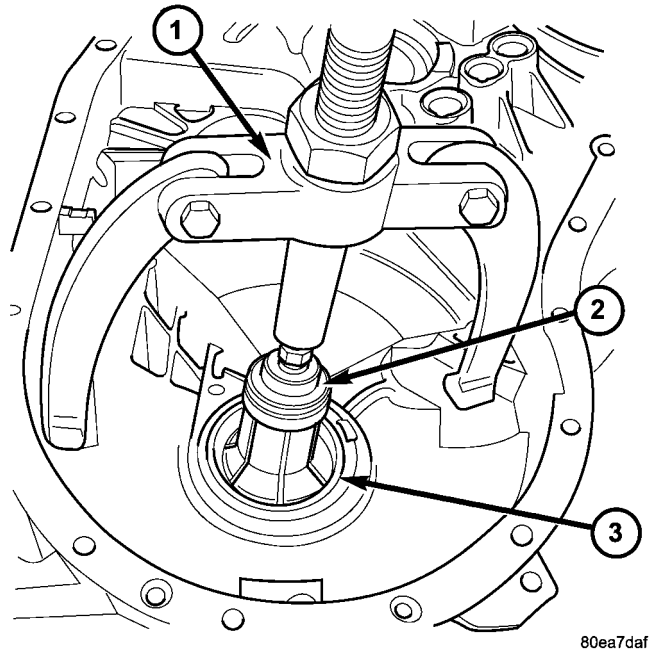

Fig. 118 Differential Bearing Cup Removal

1 - TOOL 8915
2 - TOOL 8913
3 - DIFFERENTIAL BEARING CUP

(5) Using Tools 8915 and 8912, remove input shaft roller bearing from clutch bellhousing (Fig. 119).

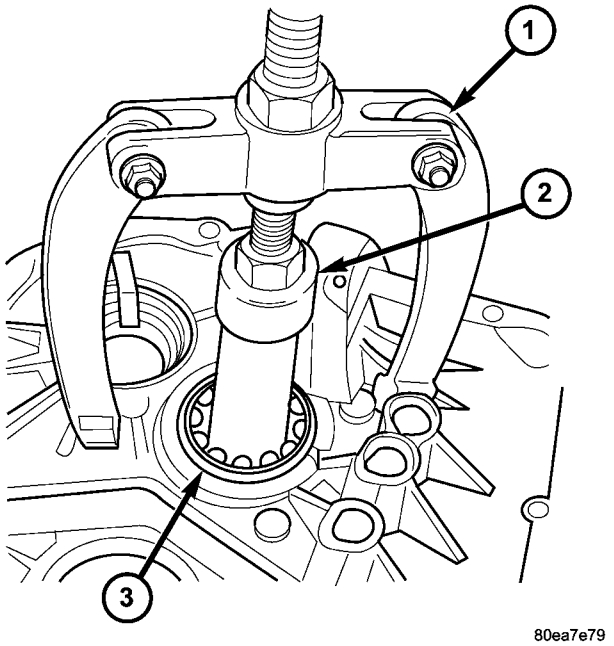

Fig. 119 Input Shaft Bearing Removal

1 - TOOL 8915
2 - TOOL 8912
3 - INPUT SHAFT BEARING

(6) Using Tools 8915 and 8913, remove output shaft bearing race from clutch bellhousing (Fig. 120).

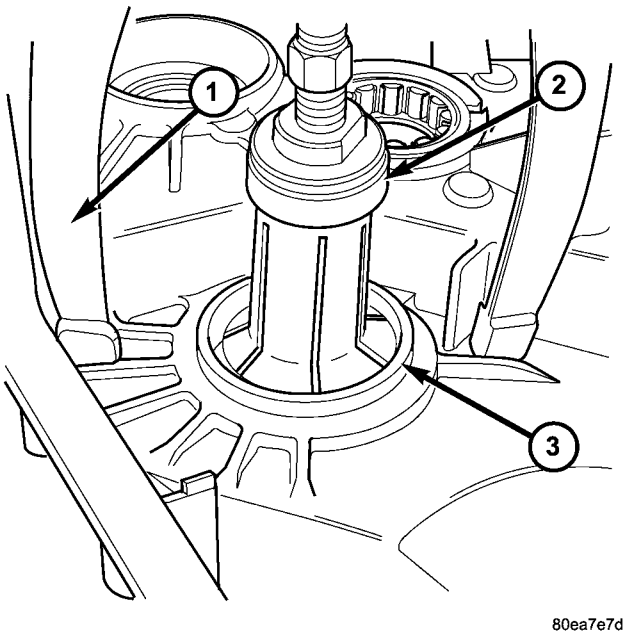

Fig. 120 Output Shaft Bearing Race Removal

1 - TOOL 8915
2 - TOOL 8913
3 - OUTPUT SHAFT BEARING RACE

CLUTCH BELLHOUSING (Continued)

ASSEMBLY

(1) Install differential bearing select shim into clutch bellhousing pocket (Fig. 121).

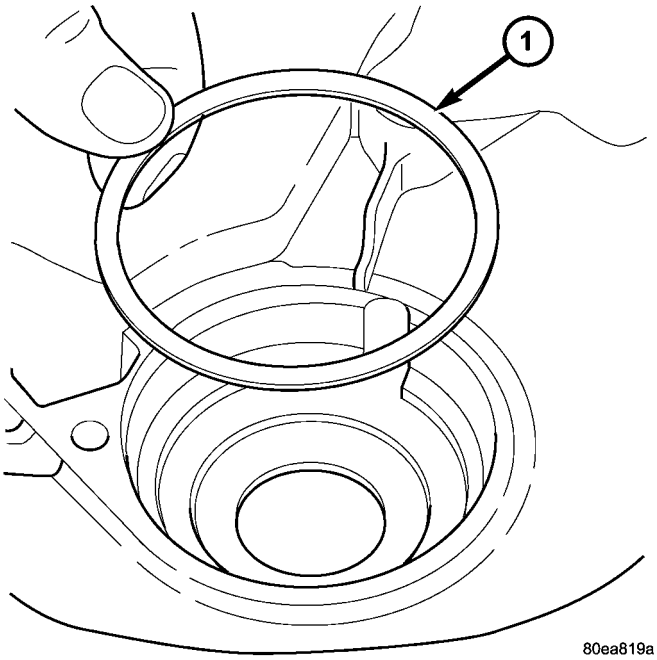

Fig. 121 Differential Bearing Shim

1 - SHIM (SELECT)

(2) Using Tool 8866 and Driver Handle C-4171, install differential bearing cup into clutch bellhousing until cup bottoms into bore (Fig. 122).

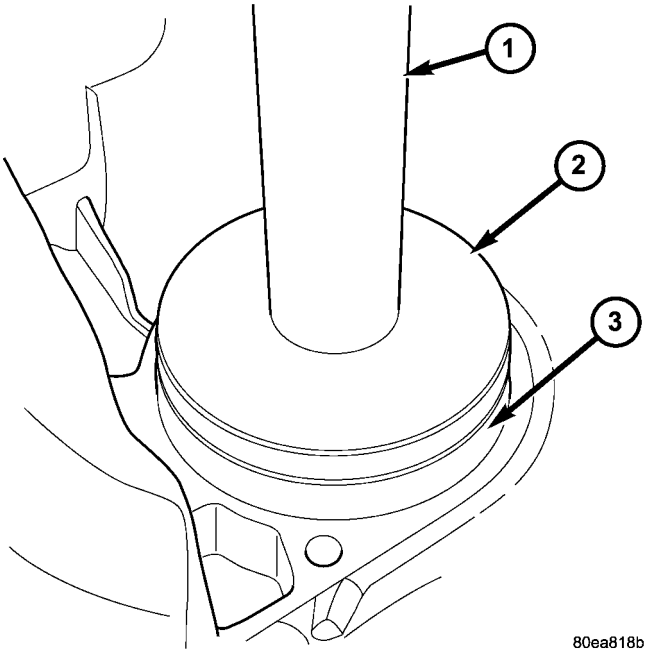

Fig. 122 Differential Bearing Cup Installation

1 - TOOL C-4171
2 - TOOL 8866
3 - BEARING CUP

(3) Position input shaft bearing to bore with letters outward (Fig. 123).

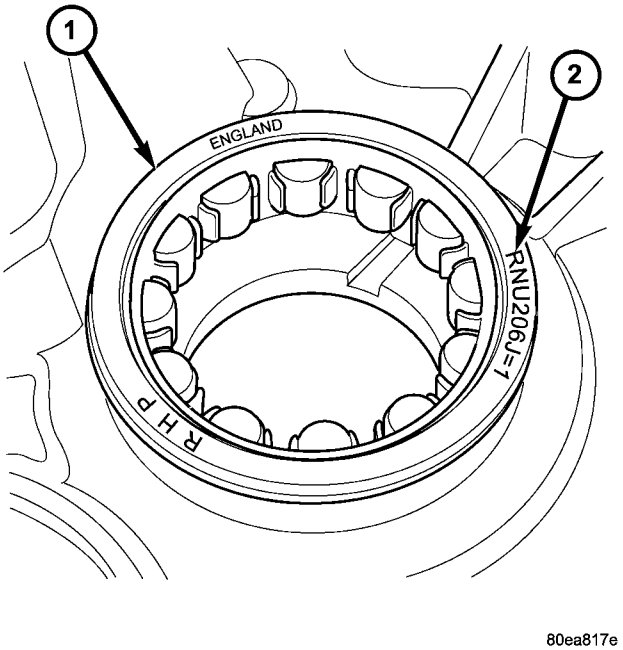

Fig. 123 Input Shaft Bearing Orientation

1 - INPUT SHAFT BEARING
2 - LETTERS UP (OUTWARD)

(4) Using Tool 8921 and Driver Handle C-4171, install input shaft roller bearing until it bottoms in bore (Fig. 124).

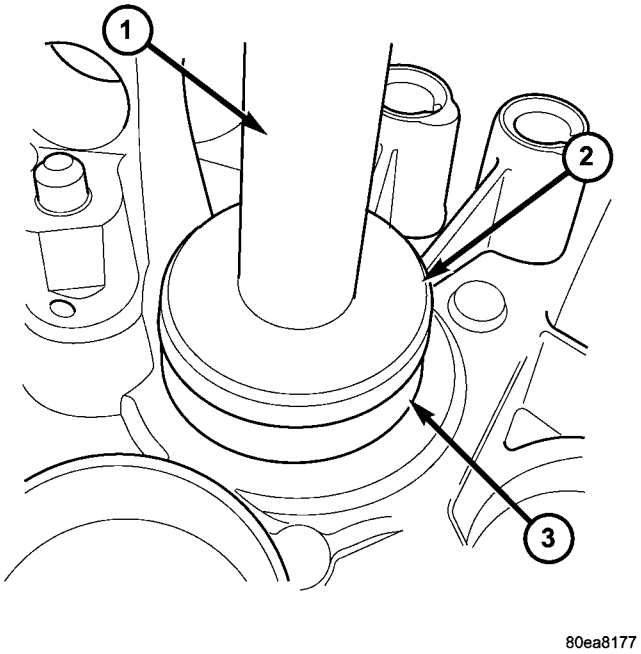

Fig. 124 Input Shaft Bearing Installation

1 - TOOL C-4171
2 - TOOL 8921
3 - INPUT SHAFT ROLLER BEARING

CLUTCH BELLHOUSING (Continued)

(5) Install output shaft bearing race to bore. Orient smaller inside diameter downward (toward case) (Fig. 125).

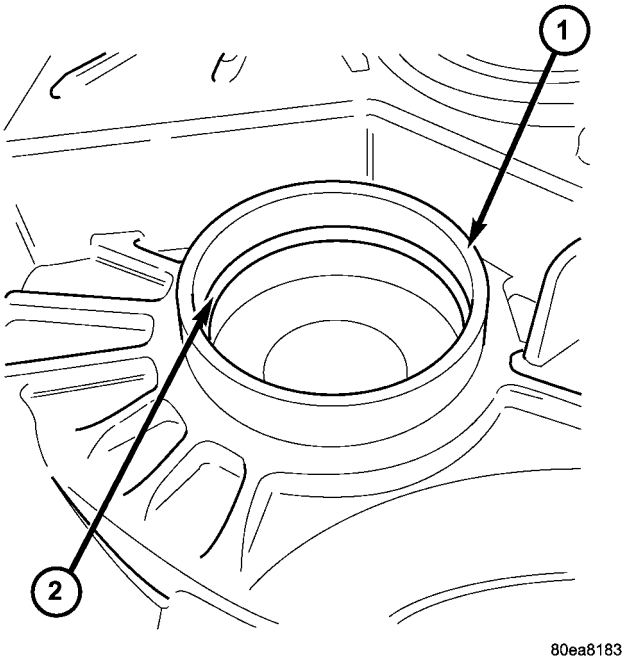

Fig. 125 Output Shaft Bearing Race Orientation

1 - OUTPUT SHAFT BEARING RACE
2 - SMALL DIAMETER DOWN (INWARD)

(6) Using Tool 8871 and Driver Handle C-4171, install output shaft bearing race until it bottoms in bore (Fig. 126).

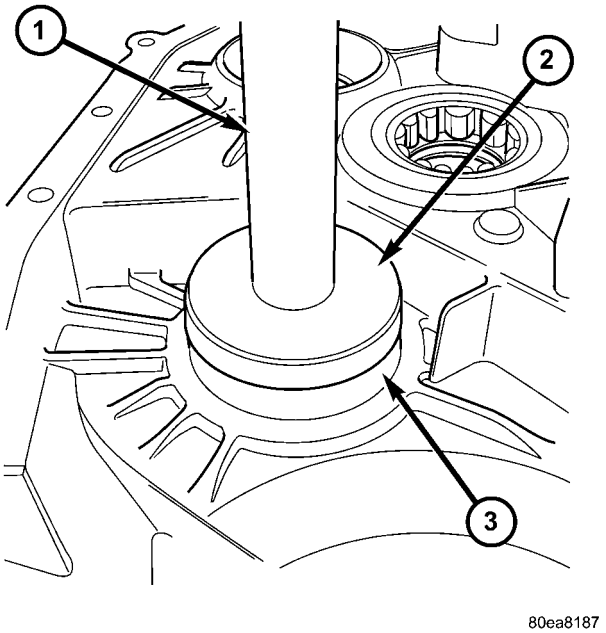

Fig. 126 Output Shaft Bearing Installation

1 - TOOL C-4171
2 - TOOL 8871
3 - OUTPUT SHAFT BEARING RACE

(7) Using appropriate end of Tool 8868, install shift shaft ball bearing until tool bottoms on case (Fig. 127).

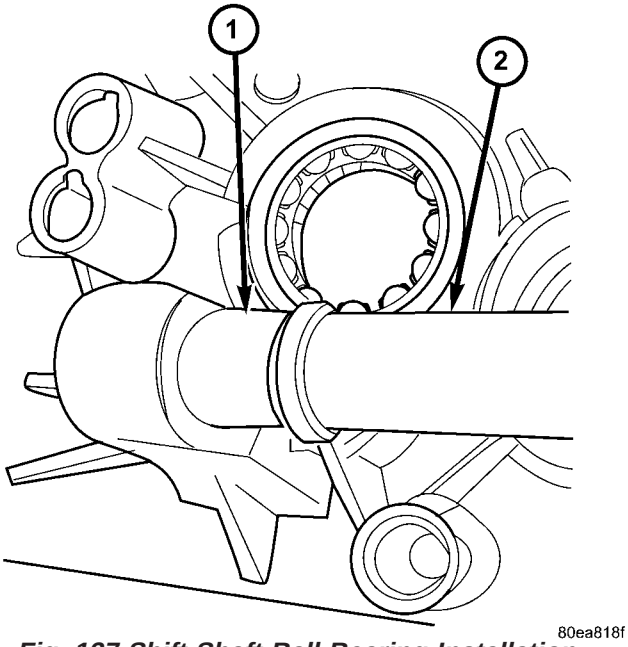

Fig. 127 Shift Shaft Ball Bearing Installation

1 - BALL BEARING
2 - TOOL 8868

(8) Using Tool 8864, install input shaft oil seal until tool bottoms on case (Fig. 128).

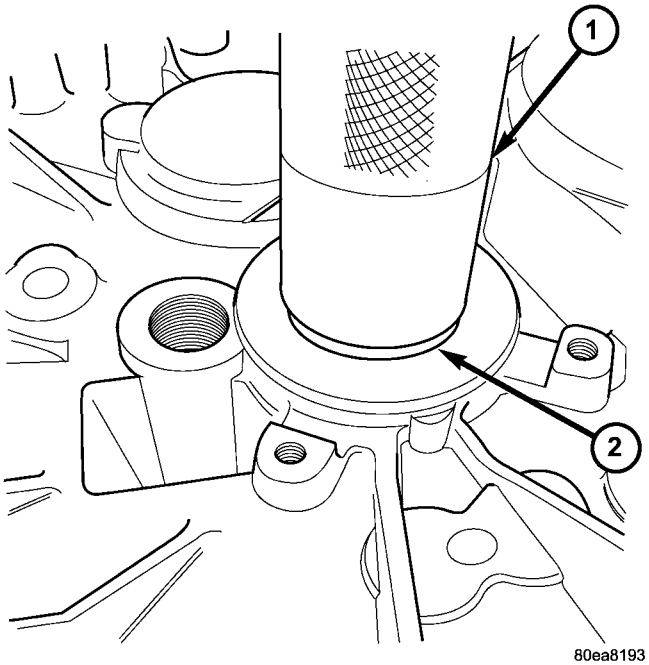

Fig. 128 Input Shaft Seal Installation

1 - TOOL 8864
2 - SEAL, INPUT SHAFT

DETENT PLUG

DESCRIPTION

The 288 Transaxle utilizes four (4) shift rod detent plugs (Fig. 129) (Fig. 130). The detent plug is a spring-loaded ball assembly that engages shift rod recesses, providing a positive shift feel while maintaining gear position.

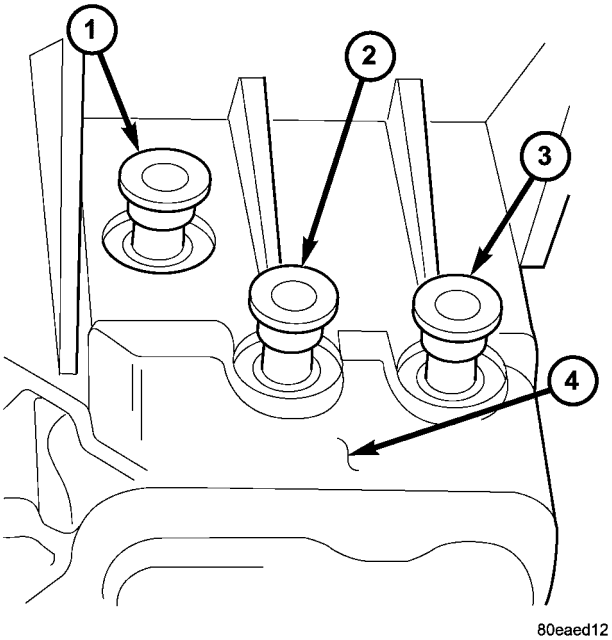

Fig. 129 Detent Plug Identification

1 - FIFTH GEAR DETENT
2 - 3/4 DETENT
3 - 1/2 DETENT
4 - TRANSAXLE HOUSING

DETENT PLUG (Continued)

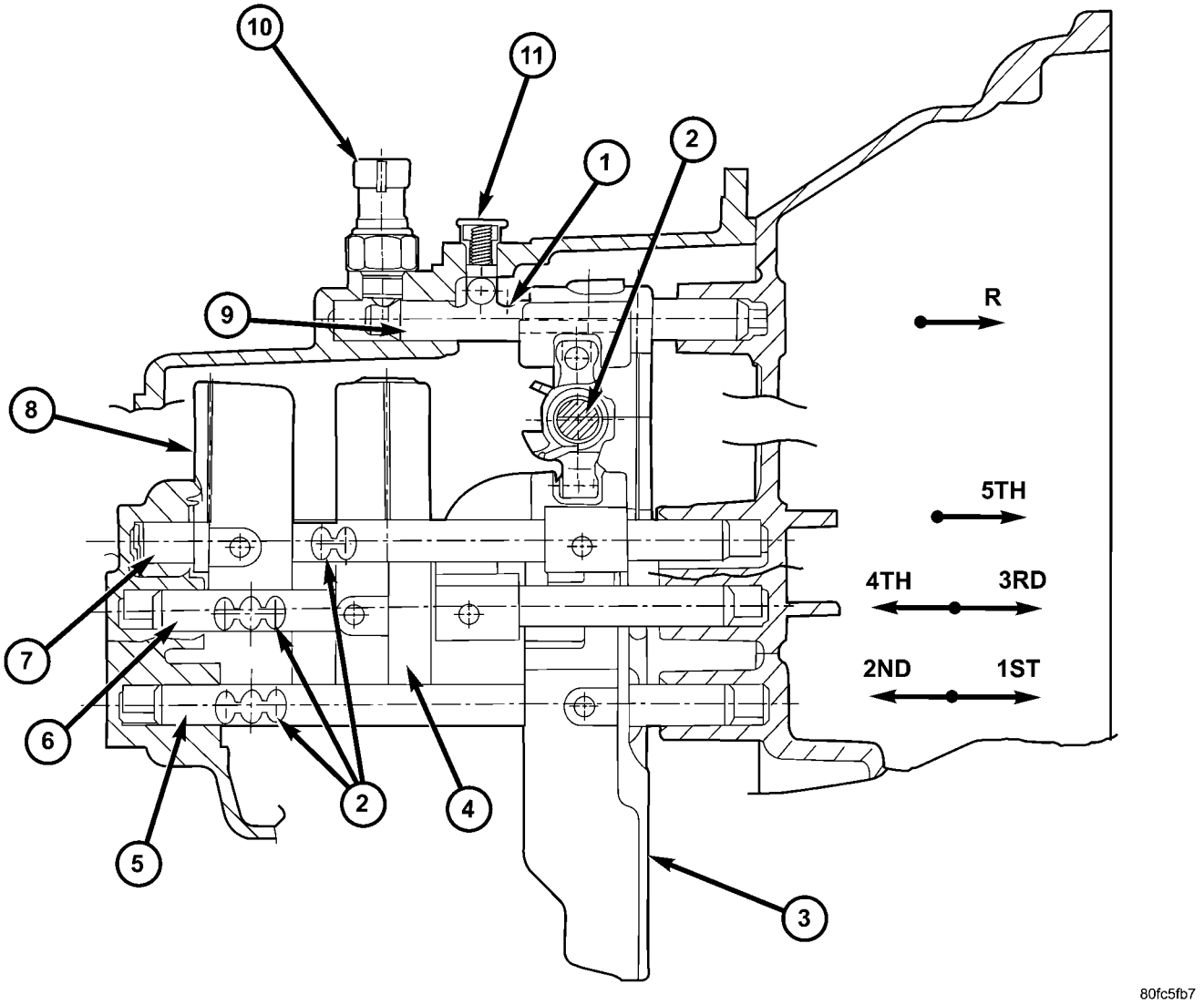

Fig. 130 G288 Transaxle Shift System

1 - RECESS
2 - SHIFT MECHANISM
3 - 1/2 FORK
4 - 3/4 FORK
5 - 1/2 SHIFT ROD
6 - 3/4 SHIFT ROD
7 - 5TH SHIFT ROD
8 - 5TH GEAR FORK
9 - REVERSE SHIFT ROD
10 - BACK-UP LAMP SWITCH
11 - DETENT PLUG

DETENT PLUG (Continued)

REMOVAL

(1) Remove transaxle assembly. (Refer to 21 - TRANSMISSION/TRANSAXLE/MANUAL - REMOVAL)

(2) Using Tool 8870 attached to Tool C-3752, remove detent plug(s) from transaxle case (Fig. 131).

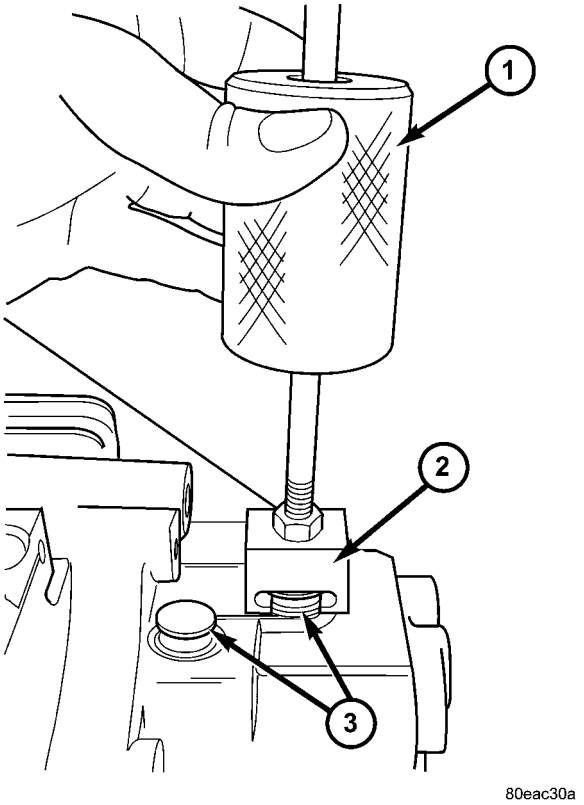

Fig. 131 Detent Plug Removal

1 - TOOL C-3752
2 - TOOL 8870
3 - DETENT PLUG

INSTALLATION

NOTE: Inspect detent plug for signs of wear or damage. If necessary, replace detent plugs with new upon installation.

(1) Install detent plug into case (Fig. 132).

(2) Using soft-tipped hammer, drive detent plug into case until it bottoms (Fig. 133)

(3) Install transaxle assembly. (Refer to 21 - TRANSMISSION/TRANSAXLE/MANUAL - INSTALLATION)

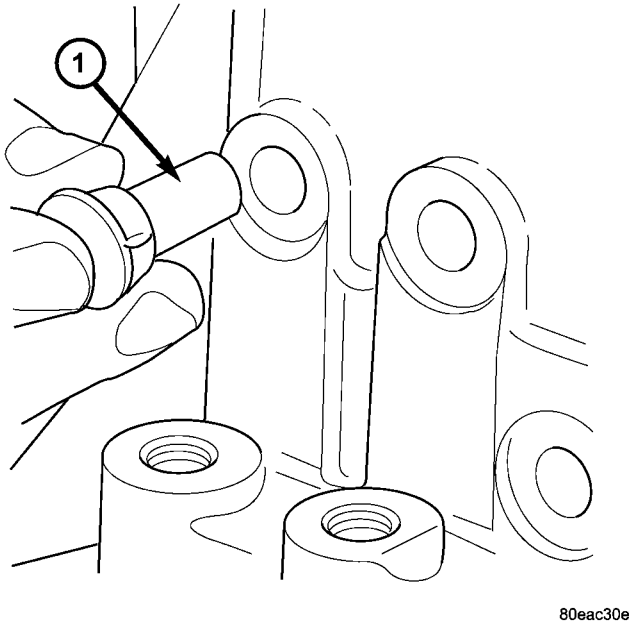

Fig. 132 Detent Plug Installation

1 - DETENT PLUG

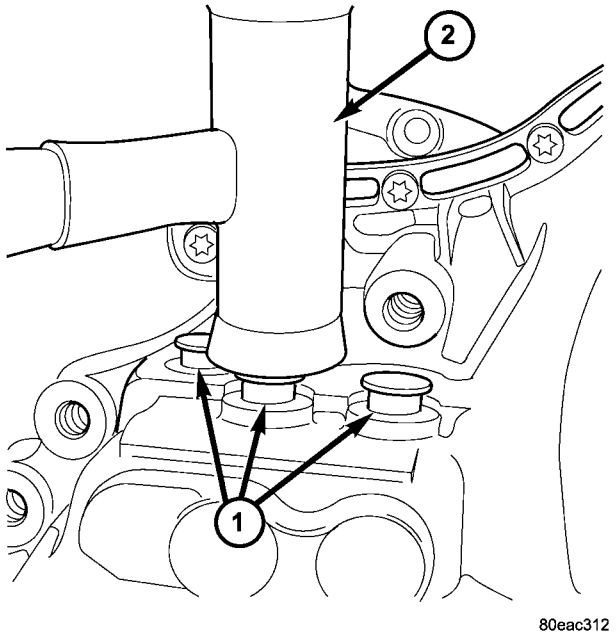

Fig. 133 Seat with Soft-Tipped Hammer

1 - DETENT PLUG
2 - SOFT-TIPPED HAMMER

DIFFERENTIAL

DESCRIPTION

The 288 differential (Fig. 134) is a conventional open design, and is integral to the transaxle. It consists of a single-piece case, which houses pinion and side gears. A floating pinion shaft is retained by the differential ring gear. The differential case is supported in the transaxle by tapered roller bearings.

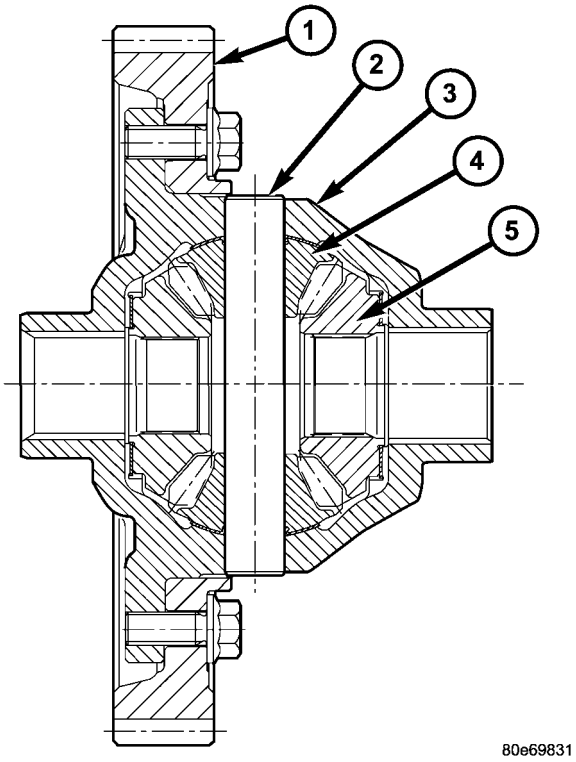

Fig. 134 Differential Assembly

1 - RING GEAR
2 - PINION SHAFT
3 - DIFFERENTIAL CASE
4 - PINION GEAR
5 - SIDE GEAR

OPERATION

The differential assembly (Fig. 134) is driven by the intermediate shaft via the ring gear. The ring gear drives the differential case, and the case drives the halfshafts through the differential gears. The differential pinion and side gears are supported in the case by pinion shafts and thrust washers. Differential pinion and side gears make it possible for front wheels to rotate at different speeds while cornering.

REMOVAL

(1) The transaxle must be removed to gain access to and service the differential assembly. (Refer to 21 - TRANSMISSION/TRANSAXLE/MANUAL - REMOVAL)

(2) Disassemble transaxle and remove differential. (Refer to 21 - TRANSMISSION/TRANSAXLE/MANUAL - DISASSEMBLY)

DISASSEMBLY

(1) Remove differential side bearings. Set up Tool 5048, with Collets 8926 as shown in (Fig. 135).

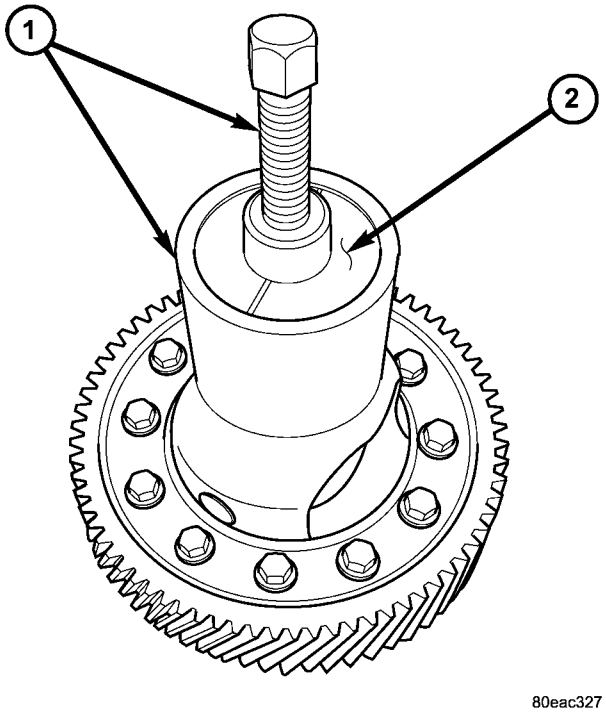

Fig. 135 Bearing Removal Set-up

1 - TOOL 5048
2 - COLLETS 8926

DIFFERENTIAL (Continued)

(2) Using suitable socket and wrench, remove differential side bearing(s) (Fig. 136).

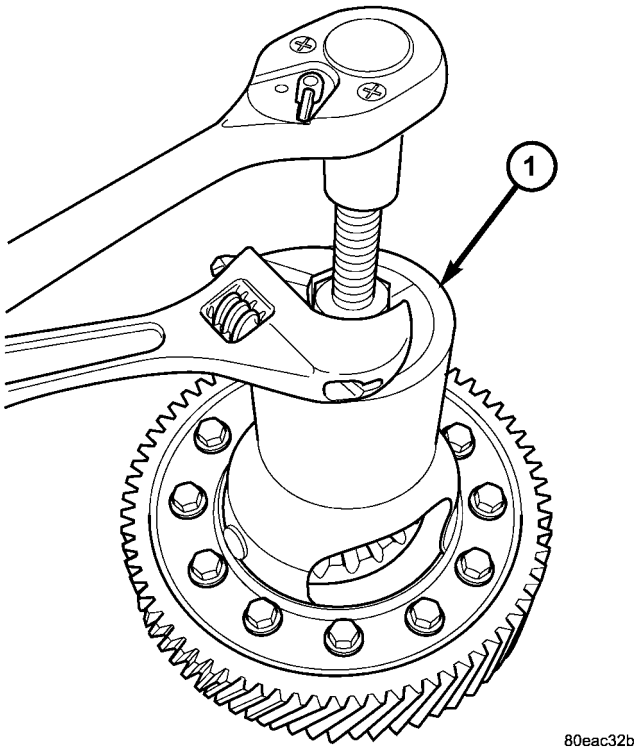

Fig. 136 Removing Differential Side Bearings

1 - TOOL 5048

(3) Remove twelve (12) differential ring gear-to-case bolts (Fig. 137). Remove differential ring gear from case.

(4) Remove pinion shaft, and remove all pinion gears, side gears, and thrust washers (Fig. 137).

ASSEMBLY

(1) Install differential pinion and side gears with washers to case (Fig. 137). Install pinion shaft. Pinion shaft is retained by ring gear.

(2) Install differential ring gear (Fig. 137). Install and torque twelve (12) ring gear-to-case bolts to 85 N·m (63 ft. lbs.).

(3) Install differential to arbor press bed.

(4) Press on differential side bearing(s) using Tool 8953 mounted onto Tool C-4171. Press until bearing bottoms on case (Fig. 138).

INSTALLATION

(1) Differential installation is part of the transaxle assembly process. Be sure to use the same differential shim that was removed upon disassembly. (Refer to 21 - TRANSMISSION/TRANSAXLE/MANUAL - ASSEMBLY)

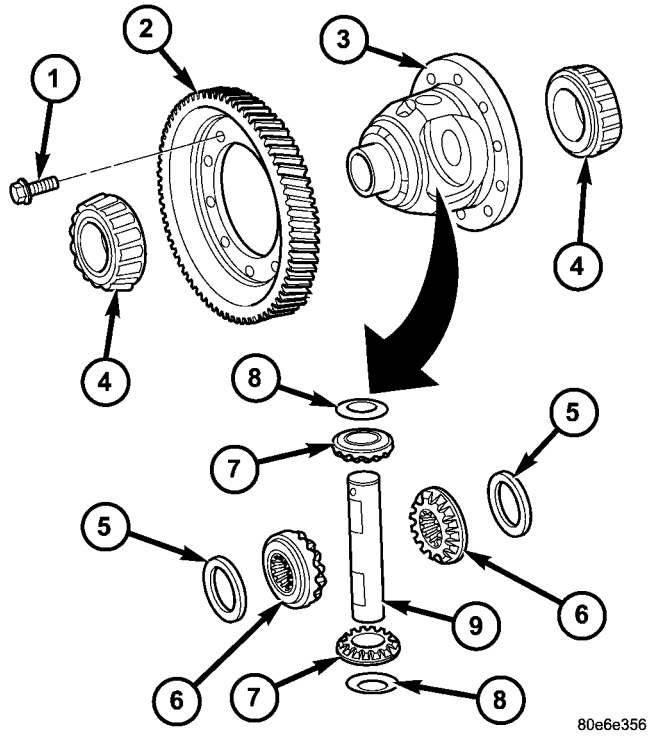

Fig. 137 Differential Components

1 - BOLT (12)
2 - RING GEAR
3 - CASE
4 - BEARING (2)
5 - WASHER (2)
6 - SIDE GEAR (2)
7 - PINION GEAR (2)
8 - WASHER (2)
9 - PINION SHAFT

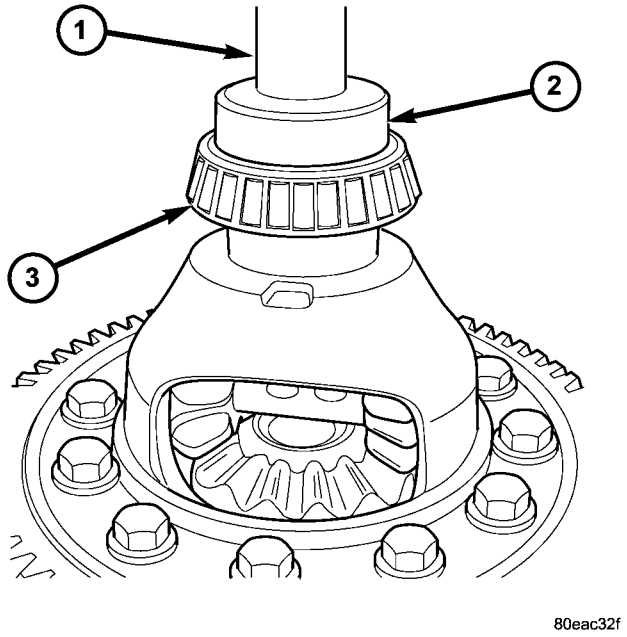

Fig. 138 Installing Differential Side Bearings

1 - TOOL C-4171
2 - TOOL 8953
3 - SIDE BEARING (2)

FLUID

STANDARD PROCEDURE

STANDARD PROCEDURE - FLUID LEVEL CHECKING

NOTE: The fluid required for this transaxle is Mopar® ATF+4 (Automatic Transmission Fluid). Use of improper or substitute fluids can cause shift problems and/or transaxle failure.

(1) Raise vehicle on hoist.

(2) **Diesel Models:** Remove engine compartment lower silencer (Fig. 140).

(3) Remove transaxle fill plug (Fig. 139). Inspect fluid level. Fluid should be within 4.7 mm (0.188 in.) from bottom of filler hole.

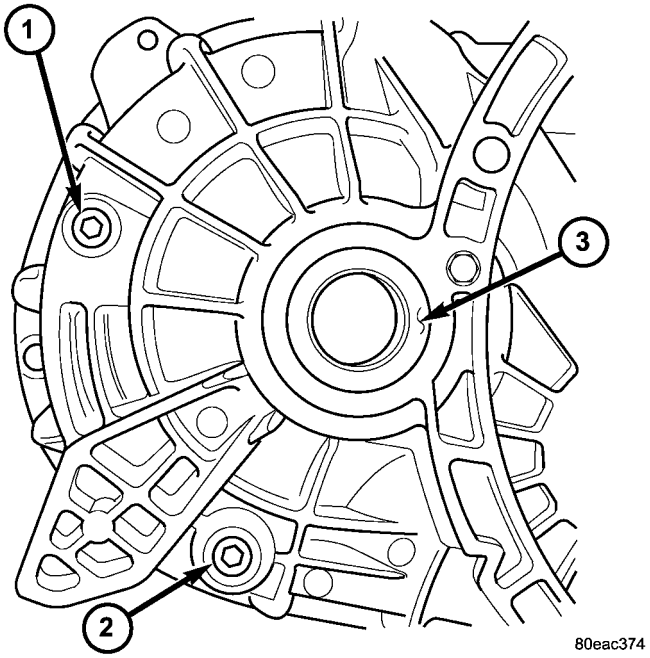

Fig. 139 Transaxle Fluid Drain and Fill Plugs

1 - FILL PLUG
2 - DRAIN PLUG
3 - RIGHT AXLE SEAL

(4) If required, fill transaxle with suitable amount of ATF+4 (Automatic Transaxle Fluid).

(5) Install fill plug and torque to 39-47 N·m (29-35 ft. lbs.) (Fig. 139).

(6) **Diesel Models:** Install engine compartment lower silencer (Fig. 140).

(7) Lower vehicle.

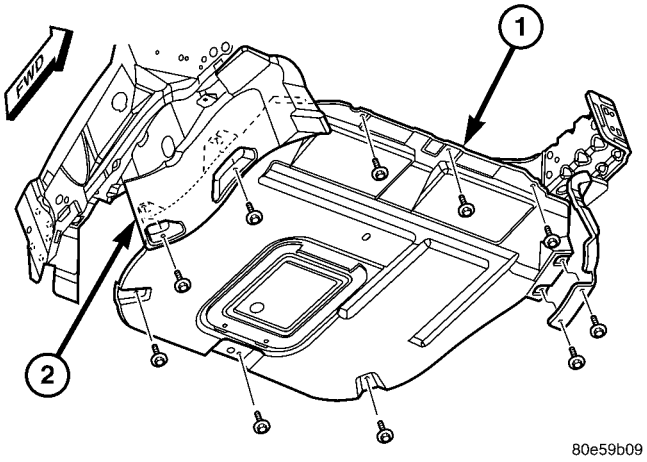

Fig. 140 Engine Compartment Lower Silencer

1 - ENGINE COMPARTMENT SILENCER
2 - ACCESSORY DRIVE BELT SPLASH SHIELD

STANDARD PROCEDURE - FLUID DRAIN AND FILL

NOTE: The fluid required for this transaxle is Mopar® ATF+4 (Automatic Transmission Fluid). Use of improper or substitute fluids can cause shift problems and/or transaxle failure.

(1) Raise vehicle on hoist.

(2) **Diesel Models:** Remove engine compartment lower silencer (Fig. 140).

(3) Obtain suitable fluid collection container and place under transaxle.

(4) Remove transaxle drain plug (Fig. 139). Allow fluid to drain into container until empty.

(5) Install drain plug and torque to 39-47 N·m (29-35 ft. lbs.).

(6) Remove transaxle fill plug (Fig. 139).

(7) **2.2L Turbo Diesel Models:** Add 2.0 L (2.1 qts.) of ATF+4 (Automatic Transaxle Fluid). **2.4L Turbo Models:** Add 1.8 L (1.9 qts.) of ATF+4 (Automatic Transaxle Fluid).

(8) Install fill plug and torque to 39-47 N·m (29-35 ft. lbs.) (Fig. 139).

(9) **Diesel Models:** Install engine compartment lower silencer (Fig. 140).

(10) Lower vehicle.

GEAR SHIFT BOOT

REMOVAL

(1) Pull up on gearshift knob with moderate force to remove from gearshift mechanism (Fig. 141) .

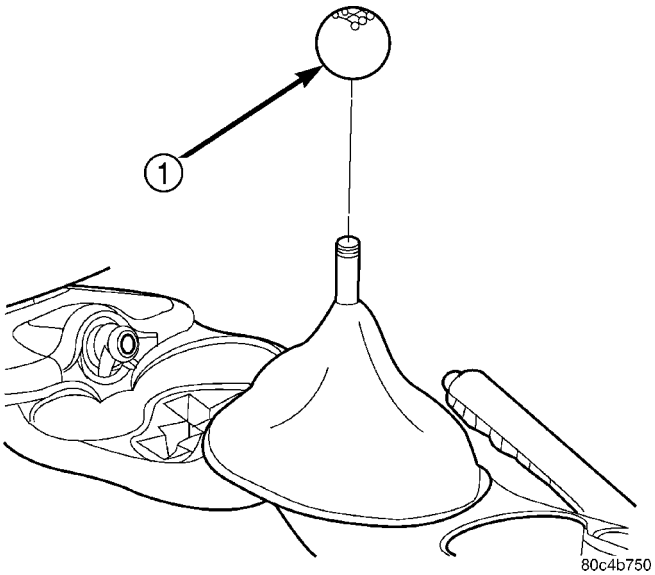

Fig. 141 Gearshift Knob Removal/Installation

1 - GEARSHIFT KNOB

(2) Remove shifter boot/bezel assembly from console by lifting up at mounting ring area (Fig. 142) .

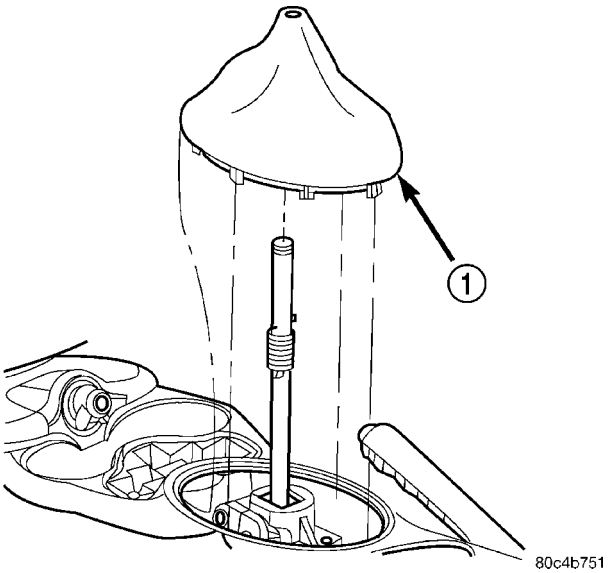

Fig. 142 Gearshift Boot Removal/Installation

1 - GEARSHIFT BOOT

INSTALLATION

(1) Position gearshift boot (Fig. 142) over the gearshift mechanism and engage tab on mount ring at front to opening in console. Apply hand pressure to engage bosses on mount ring of boot to console opening slots.

(2) Position gearshift knob hole over the gearshift mechanism (Fig. 141) and align the shift pattern.

(3) Strike knob with rubber mallet to engage knob to mechanism.

(4) Verify that shift pattern is aligned properly.

GEAR SHIFT CABLE

REMOVAL

NOTE: The crossover and selector cables are manufactured as a cable “assembly” and cannot be serviced individually.

(1) Pull up on gearshift knob with moderate force to remove from gearshift mechanism (Fig. 143).

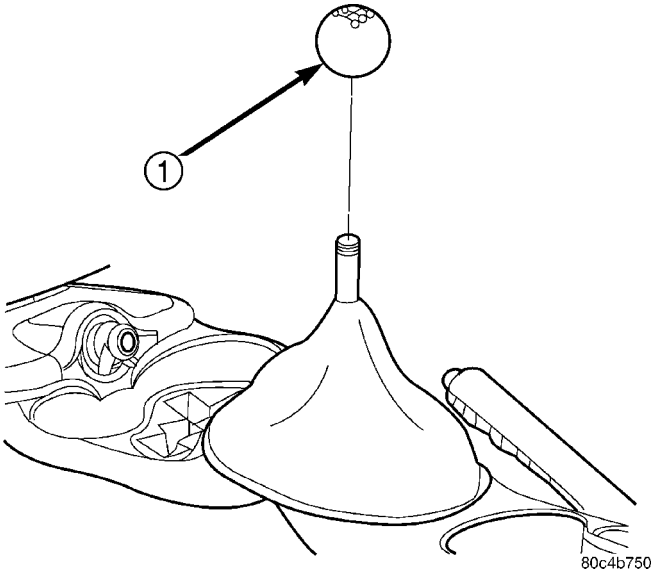

Fig. 143 Gearshift Knob Removal/Installation

1 - GEARSHIFT KNOB

GEAR SHIFT CABLE (Continued)

(2) Remove shifter boot/bezel assembly from console by lifting up at mounting ring area (Fig. 144).

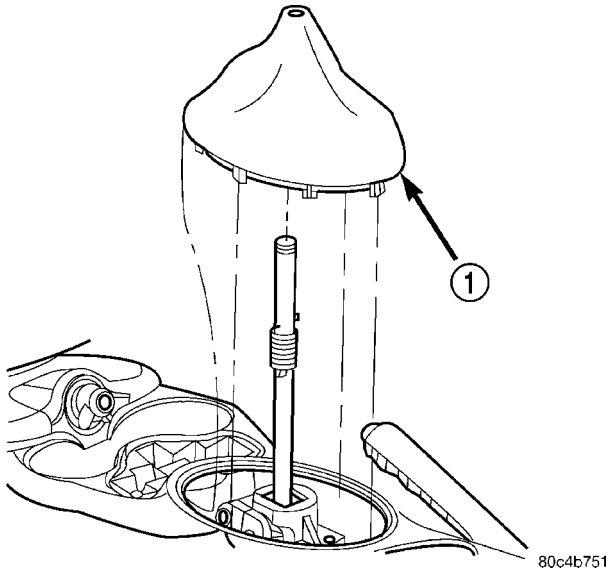

Fig. 144 Gearshift Boot

1 - GEARSHIFT BOOT

(3) Remove the center console assembly as shown in (Fig. 145).

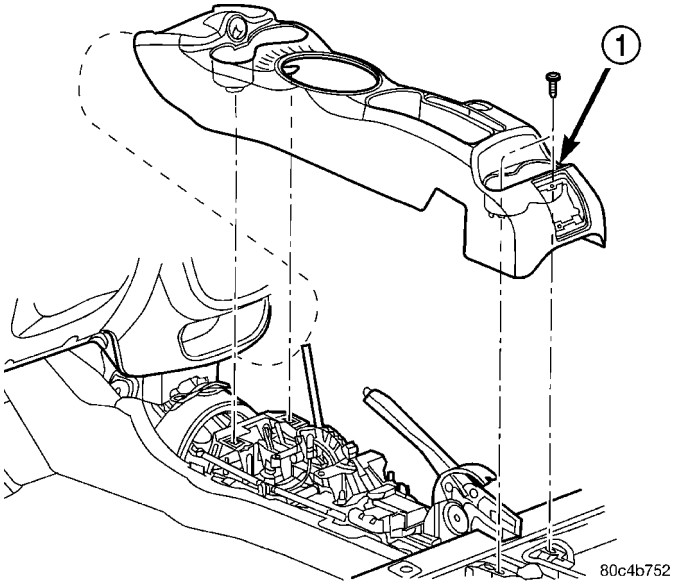

Fig. 145 Center Console Removal/Installation—Typical

1 - CENTER CONSOLE

(4) Remove crossover cable retaining clip and disconnect from shift lever (Fig. 146).

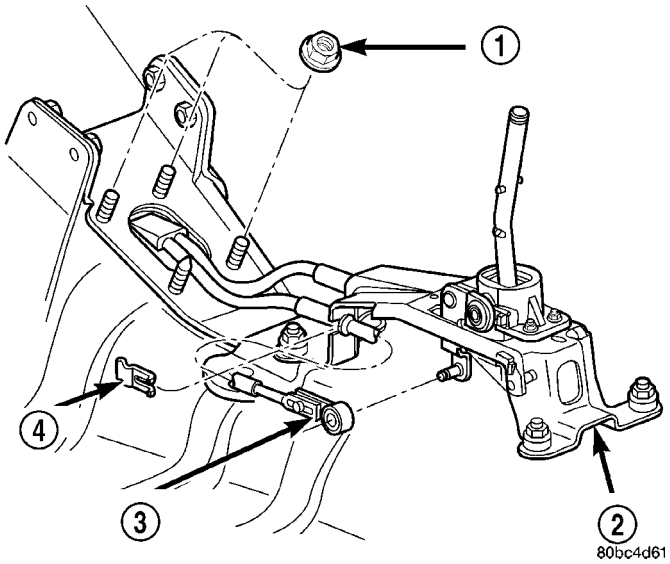

Fig. 146 Crossover Cable at Shifter Assembly

1 - GROMMET PLATE NUT
2 - SHIFTER
3 - CROSSOVER CABLE
4 - CLIP

(5) Remove selector cable retaining clip and disconnect from shift lever (Fig. 147).

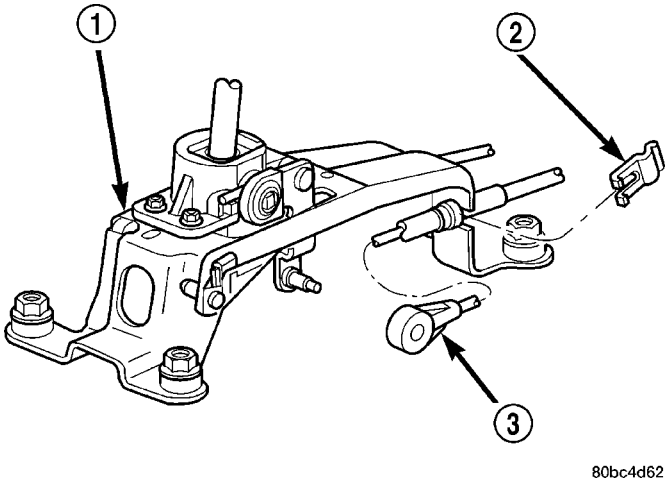

Fig. 147 Selector Cable at Shifter Assembly

1 - SHIFTER
2 - CLIP
3 - SELECTOR CABLE

GEAR SHIFT CABLE (Continued)

(6) Remove three grommet plate-to-floor pan attaching nuts (Fig. 146).

(7) Remove air cleaner assy (Fig. 148).

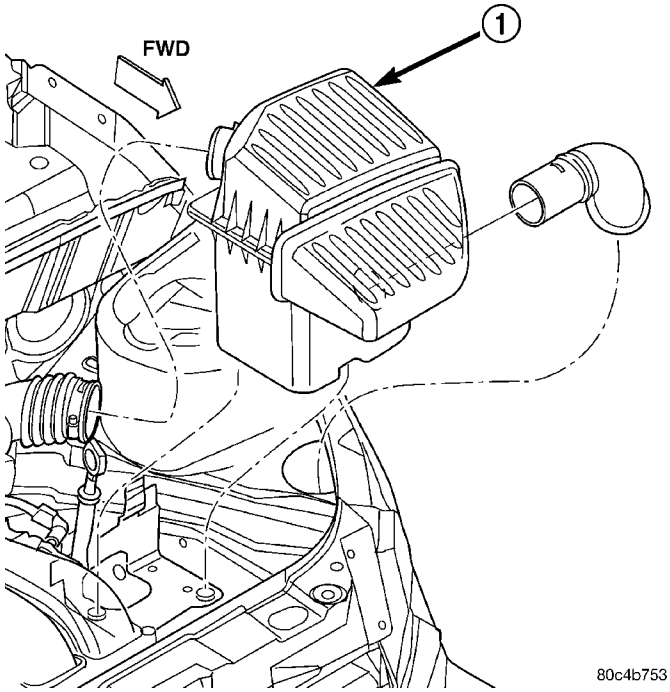

Fig. 148 Air Cleaner Assembly Removal/Installation

1 - AIR CLEANER ASSEMBLY

(8) Disconnect battery cables.

(9) Remove battery hold-down clamp and battery (Fig. 149).

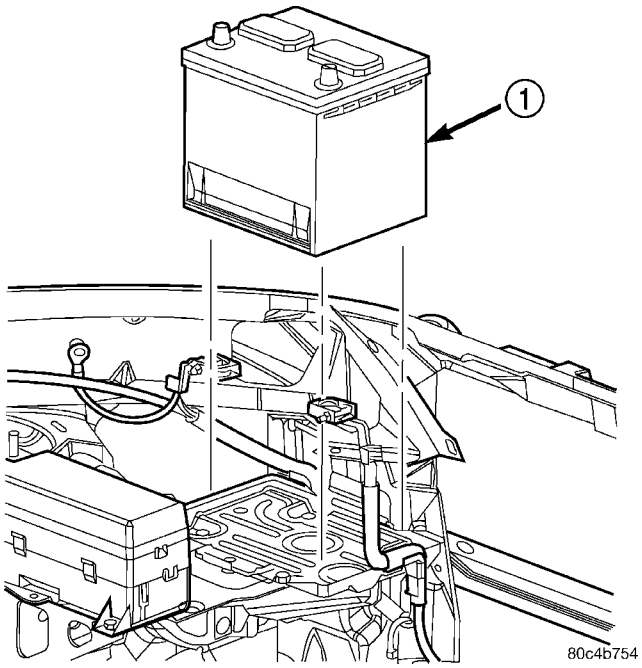

Fig. 149 Battery Removal/Installation

1 - BATTERY

(10) Remove battery tray (Fig. 150).

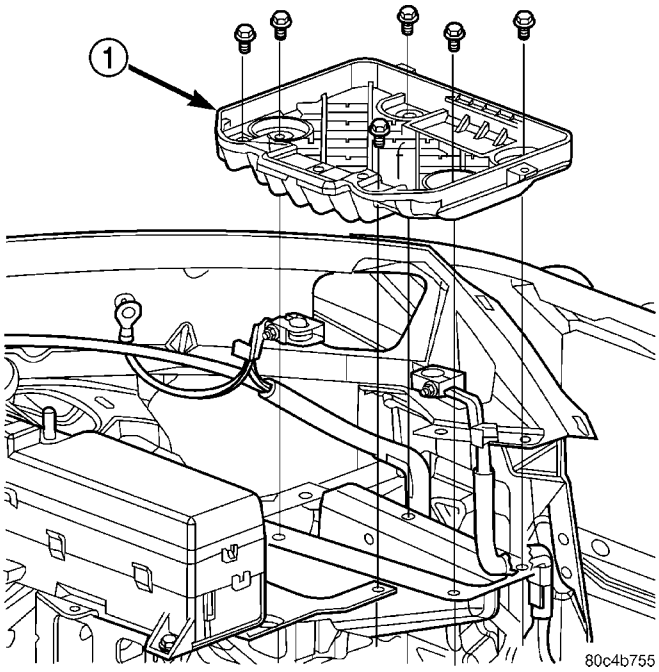

Fig. 150 Battery Tray Removal/Installation

1 - BATTERY TRAY

GEAR SHIFT CABLE (Continued)

(11) Disconnect cables from the shift levers at the transaxle (Fig. 151).

CAUTION: Pry up with equal force on both sides of shifter cable isolator bushings to avoid damaging cable isolator bushings.

(12) Remove cable retaining clips and remove cables from bracket (Fig. 151).

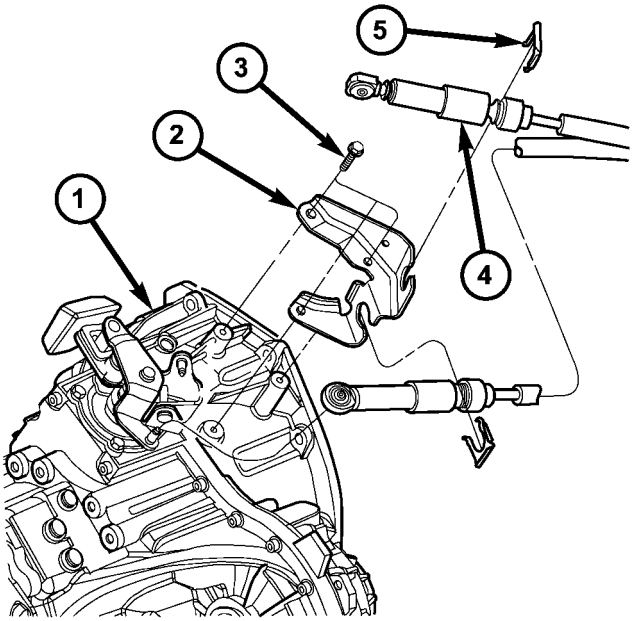

Fig. 151 Gear Shift Cables and Bracket at Transaxle

1 - TRANSAXLE
2 - GEAR SHIFT CABLE BRACKET
3 - BOLT (3)
4 - CABLE ASSEMBLY
5 - RETAINER (2)

(13) Raise vehicle on hoist.

(14) Remove converter heat shield (Fig. 152).

(15) Remove remaining grommet plate-to-floor pan screw (Fig. 153).

(16) Remove cable assembly from vehicle.

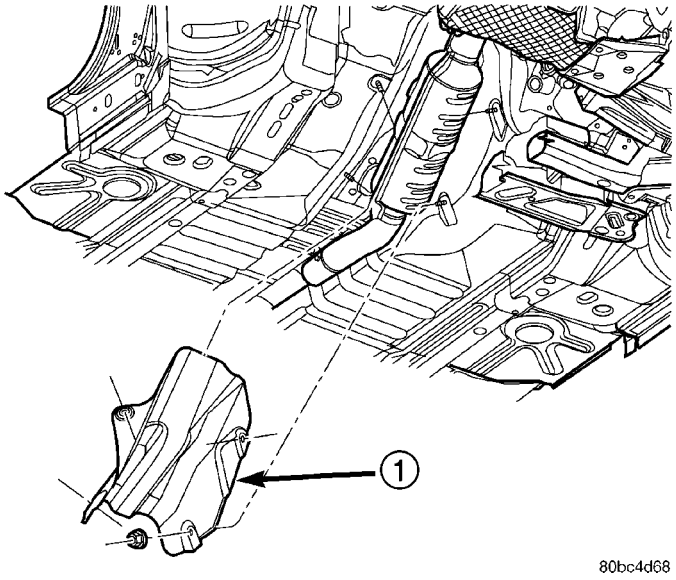

Fig. 152 Converter Heat Shield Removal/Installation

1 - CONVERTER HEAT SHIELD

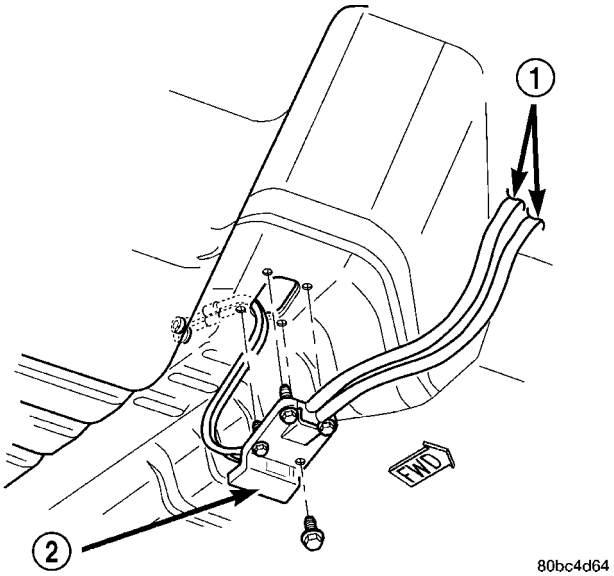

Fig. 153 Shift Cable Assembly at Floor Pan

1 - CABLE ASSEMBLY
2 - GROMMET PLATE

GEAR SHIFT CABLE (Continued)

INSTALLATION

CAUTION: Gearshift cable bushings must not be lubricated or the bushings will swell and split.

(1) Raise vehicle on hoist.

(2) Install cable assembly through floor pan opening and secure to floor pan with grommet plate and one screw (Fig. 154). Make sure the three grommet plate studs protrude through cable assembly and floor pan and tighten screw to 7 N·m (60 in. lbs.).

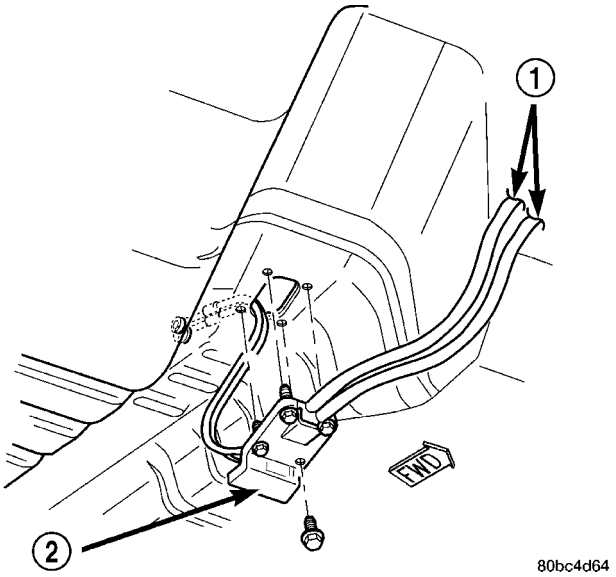

Fig. 154 Shift Cable Assembly at Floor Pan

1 - CABLE ASSEMBLY
2 - GROMMET PLATE

(3) Route transaxle end of cable assembly into engine compartment and over transaxle assembly.

(4) Install converter heat shield (Fig. 155).

(5) Lower vehicle.

(6) Install gearshift cables to mounting bracket and fasten with NEW clips (Fig. 156). Make sure clips are installed flush to bracket.

(7) Connect gearshift selector and crossover cable to shift levers at transaxle (Fig. 156).

(8) Install and tighten the three grommet plate-to-floor pan nuts to 6 N·m (50 in. lbs.) torque.

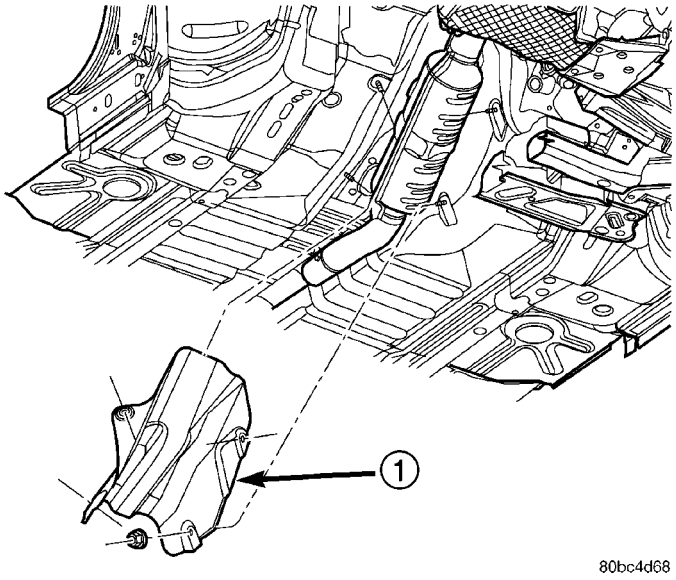

Fig. 155 Converter Heat Shield Removal/Installation

1 - CONVERTER HEAT SHIELD

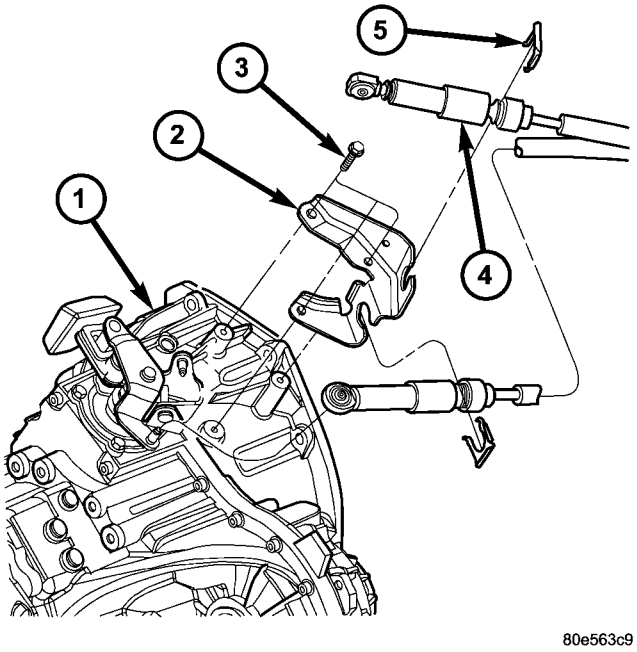

Fig. 156 Gear Shift Cables and Bracket at Transaxle

1 - TRANSAXLE
2 - GEAR SHIFT CABLE BRACKET
3 - BOLT (3)
4 - CABLE ASSEMBLY
5 - RETAINER (2)

GEAR SHIFT CABLE (Continued)

(9) Install selector cable to shifter lever and secure cable to shifter bracket. Install clip (Fig. 157).

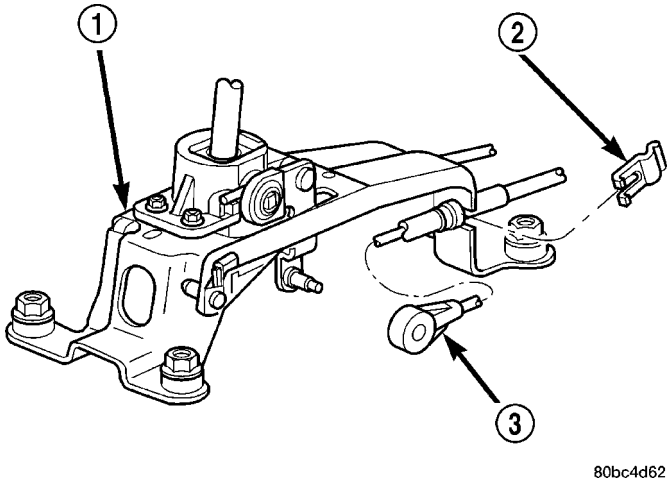

Fig. 157 Selector Cable at Shifter Assembly

1 - SHIFTER
2 - CLIP
3 - SELECTOR CABLE

(10) Install crossover cable to shifter lever and secure cable to shifter bracket. Install clip (Fig. 158).

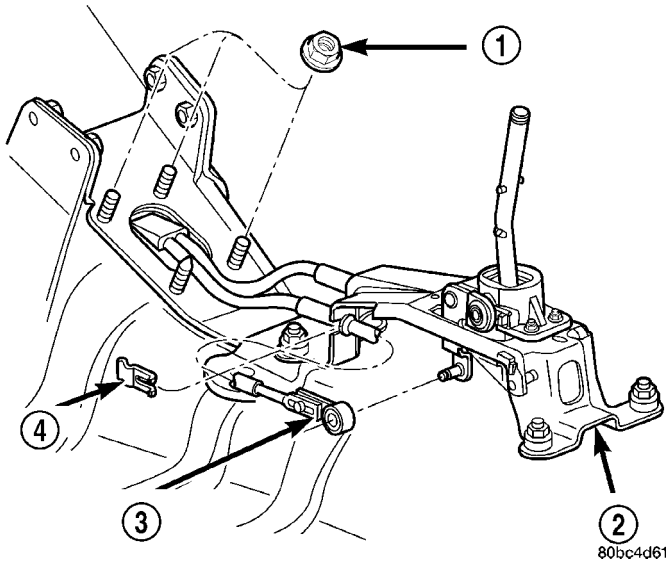

Fig. 158 Crossover Cable at Shifter Assembly

1 - GROMMET PLATE NUT
2 - SHIFTER
3 - CROSSOVER CABLE
4 - CLIP

NOTE: Only the crossover cable is adjustable. The selector cable does not have any adjustment capabilities.

(11) **Adjust crossover cable as follows:**

(a) Loosen adjusting screw on crossover cable at shifter (Fig. 159).

(b) The gearshift mechanism and transaxle crossover lever are spring-loaded and self-centering. Alignment pins used in the past are not required anymore. Allow gearshift mechanism and transaxle crossover lever to relax in their neutral positions. To ensure the gearshift lever is in the proper position, place the shifter in 3rd or 4th gear if necessary. Torque adjustment screw to 8 N·m (70 in. lbs.). Care must be taken to avoid moving the shift mechanism off-center during screw tightening.

(c) Perform functional check by shifting transaxle into all gears.

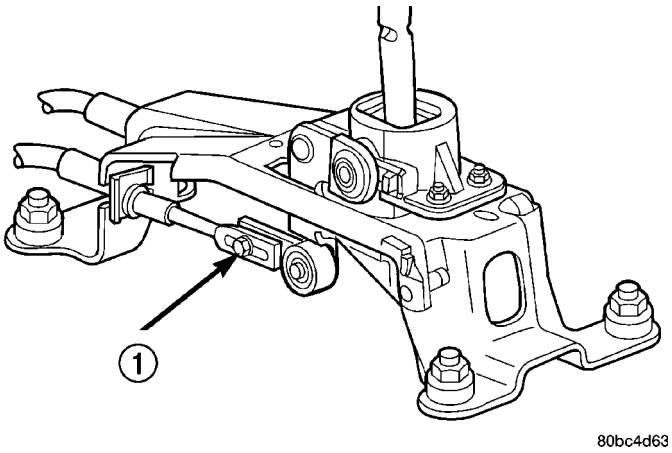

Fig. 159 Crossover Cable Adjustment Screw

1 - CROSSOVER ADJUSTMENT SCREW

(12) Install center console assembly (Fig. 160). Verify that boot is not pinched at console opening before tightening.

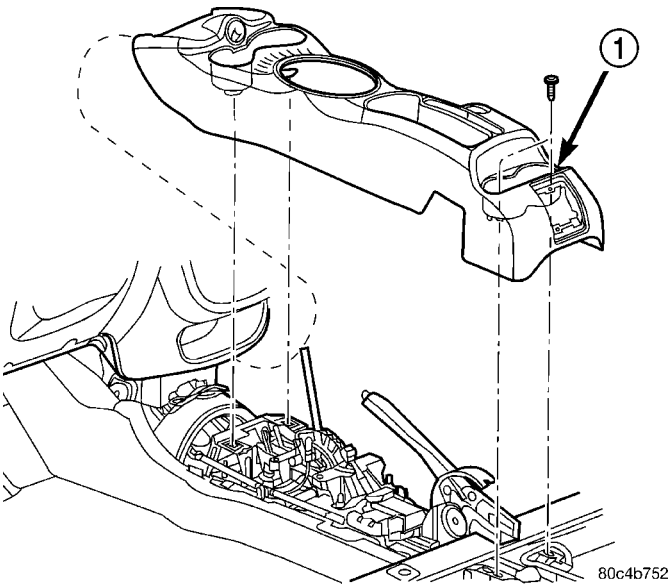

Fig. 160 Center Console Removal/Installation - Typical

1 - CENTER CONSOLE

GEAR SHIFT CABLE (Continued)

(13) Position gearshift boot (Fig. 161) over the gearshift mechanism and engage tab on mount ring at front to opening in console. Apply hand pressure to engage bosses on mount ring of boot to console opening slots.

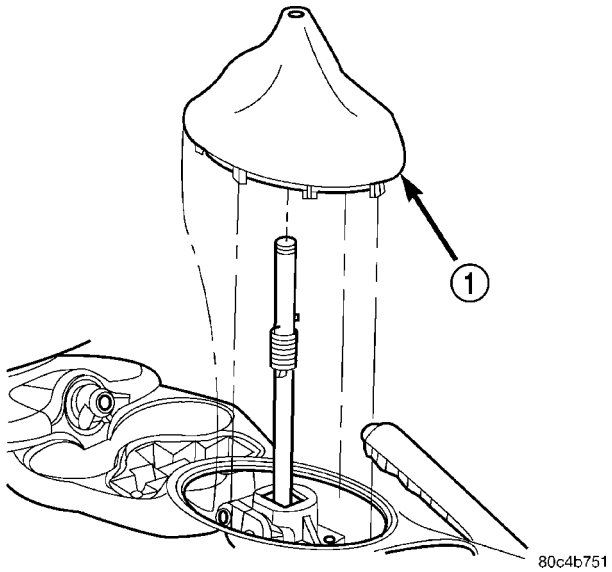

Fig. 161 Gearshift Boot

1 - GEARSHIFT BOOT

(14) Position gearshift knob hole over the gearshift mechanism (Fig. 162) and align the shift pattern.

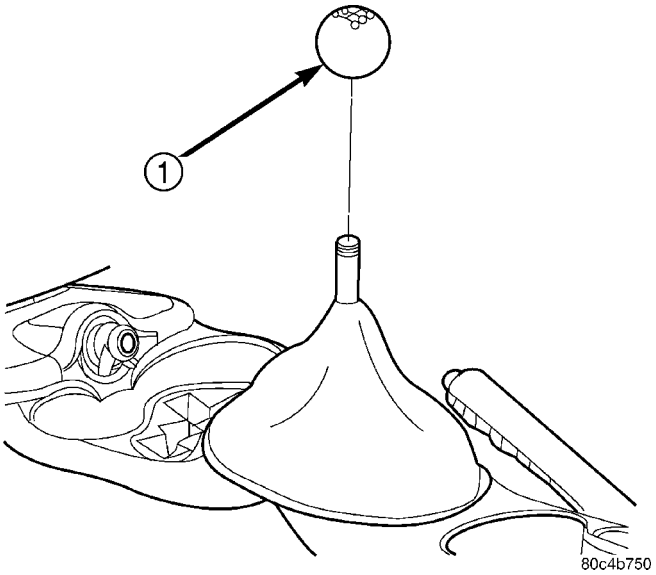

Fig. 162 Gearshift Knob Removal/Installation

1 - GEARSHIFT KNOB

(15) Strike knob with rubber mallet to engage knob to mechanism.

(16) Verify that shift pattern is aligned properly.

(17) Install battery tray (Fig. 163).

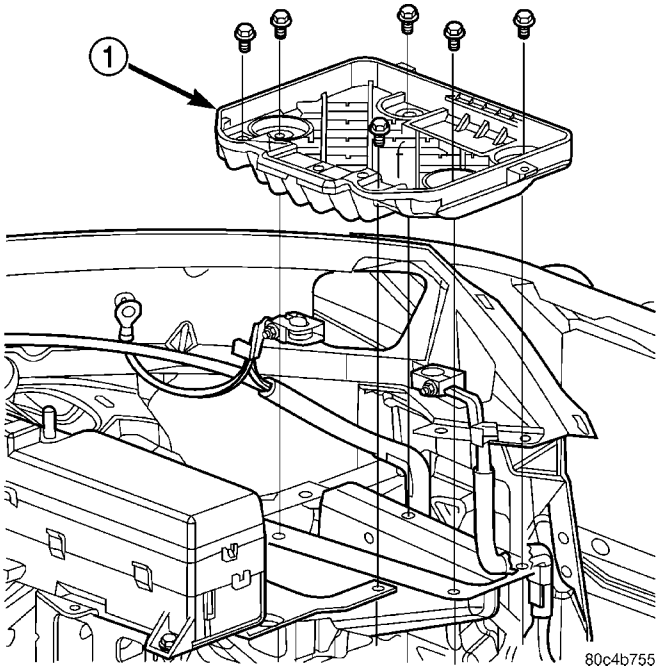

Fig. 163 Battery Tray Removal/Installation

1 - BATTERY TRAY

(18) Install battery and hold-down clamp (Fig. 164).

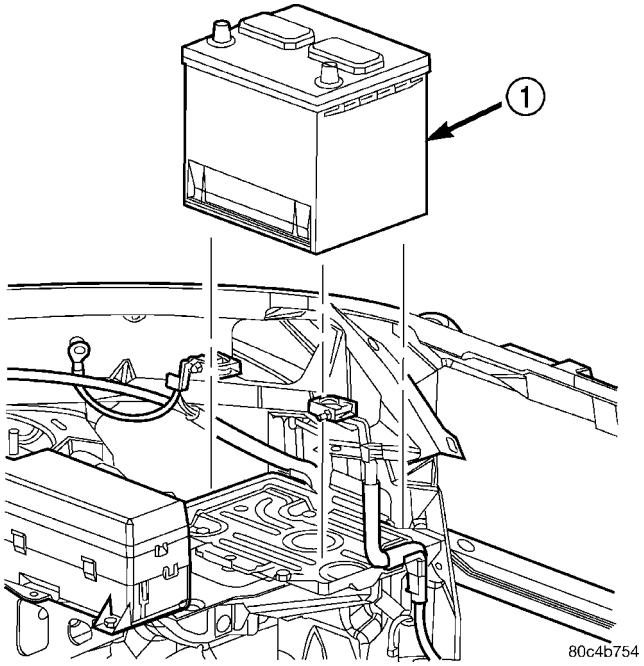

Fig. 164 Battery Removal/Installation

1 - BATTERY

GEAR SHIFT CABLE (Continued)

(19) Install the air cleaner assembly (Fig. 165).

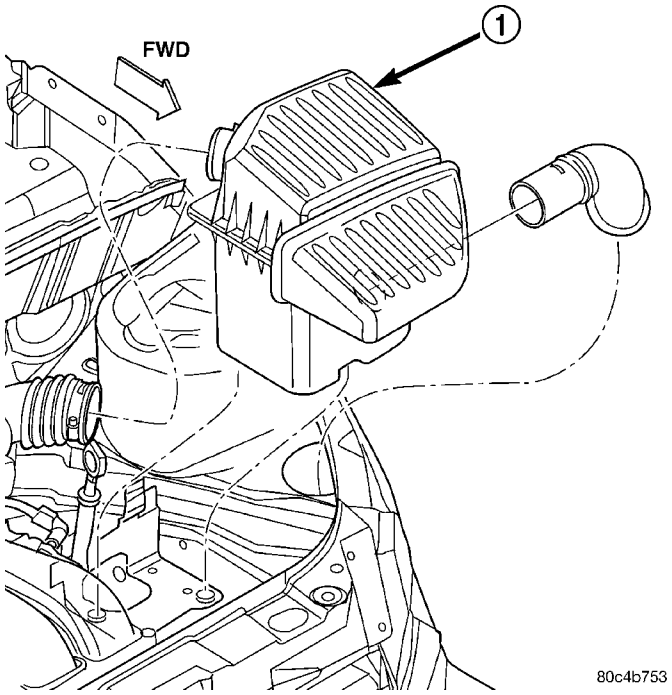

Fig. 165 Air Cleaner Assembly Removal/Installation

1 - AIR CLEANER ASSEMBLY

(20) Connect battery cables.

ADJUSTMENTS

ADJUSTMENT - GEARSHIFT CROSSOVER CABLE

(1) Remove center console from vehicle. (Refer to 23 - BODY/INTERIOR/CENTER CONSOLE - REMOVAL)

(2) Loosen adjusting screw on crossover cable at shifter (Fig. 166).

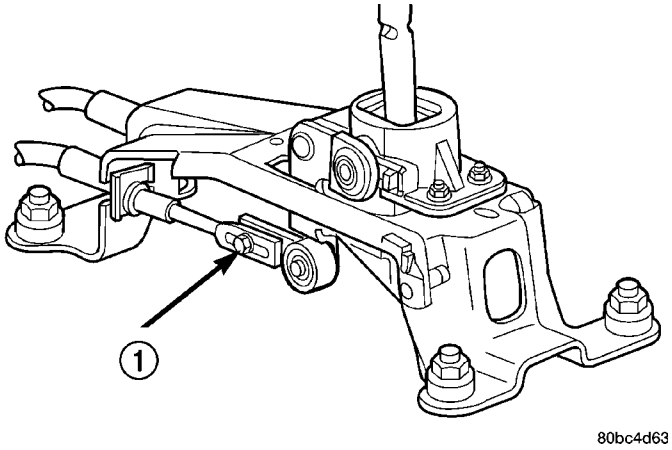

Fig. 166 Loosen Crossover Cable Adjustment Screw

1 - CROSSOVER ADJUSTMENT SCREW

(3) The gearshift mechanism and transaxle crossover lever are spring-loaded and self-centering. Alignment pins used in the past are not required anymore. Allow gearshift mechanism and transaxle crossover lever to relax in their neutral positions. To ensure the gearshift lever is in the proper position, place the shifter in 3rd or 4th gear if necessary. Torque adjustment screw to 8 N·m (70 in. lbs.). Care must be taken to avoid moving the shift mechanism off-center during screw tightening.

(4) Reinstall center console. Reinstall boot and knob. (Refer to 23 - BODY/INTERIOR/CENTER CONSOLE - INSTALLATION)

GEAR SHIFT KNOB

REMOVAL

(1) Pull up on gearshift knob with moderate force to remove from gearshift mechanism (Fig. 167) .

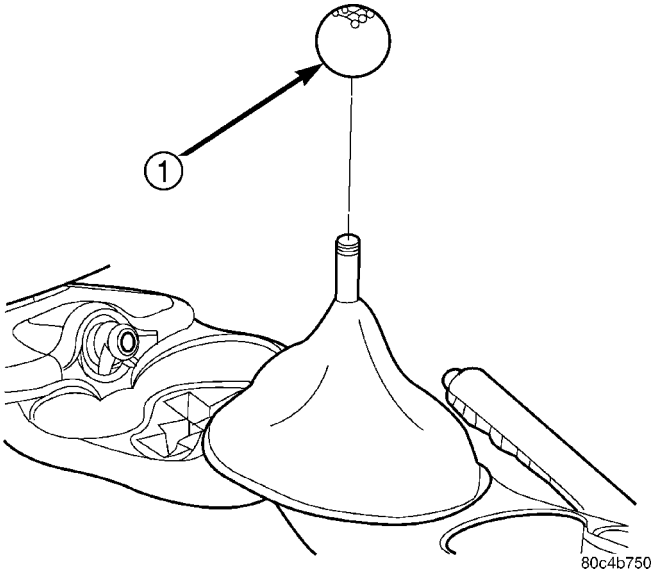

Fig. 167 Gearshift Knob Removal/Installation

1 - GEARSHIFT KNOB

INSTALLATION

(1) Position knob hole over the gearshift mechanism and align the shift pattern.

(2) Strike knob with rubber mallet to engage knob to mechanism.

(3) Verify that shift pattern is aligned properly.

GEAR SHIFT MECHANISM

REMOVAL

(1) Pull up on gearshift knob with moderate force to remove from gearshift mechanism (Fig. 168).

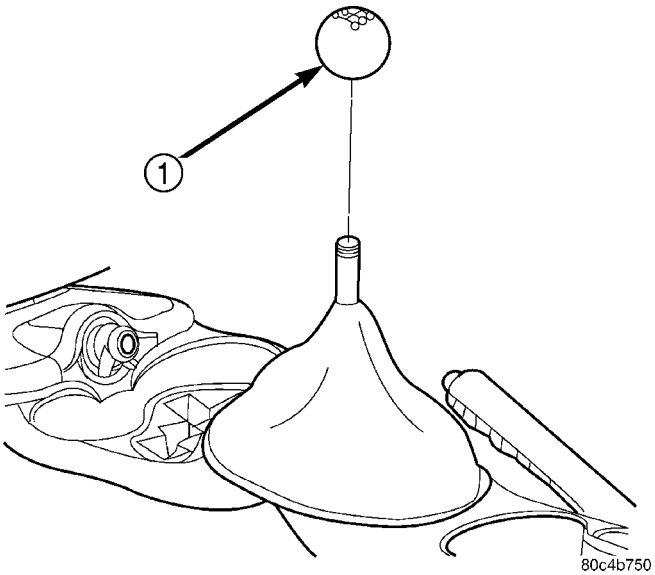

Fig. 168 Gearshift Knob Removal/Installation

1 - GEARSHIFT KNOB

(2) Remove shifter boot/bezel assembly from console by lifting up at mounting ring area (Fig. 169).

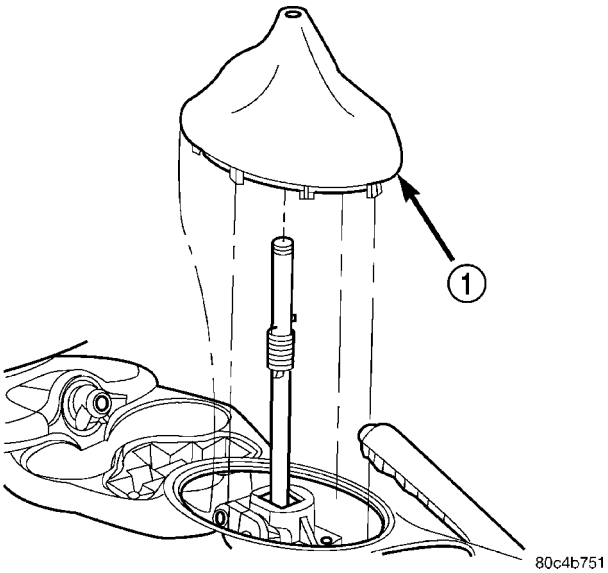

Fig. 169 Gearshift Boot Removal/Installation

1 - GEARSHIFT BOOT

(3) Remove the center console assembly as shown in (Fig. 170). Remove rear power window switch (if equipped) and disconnect harness from console.

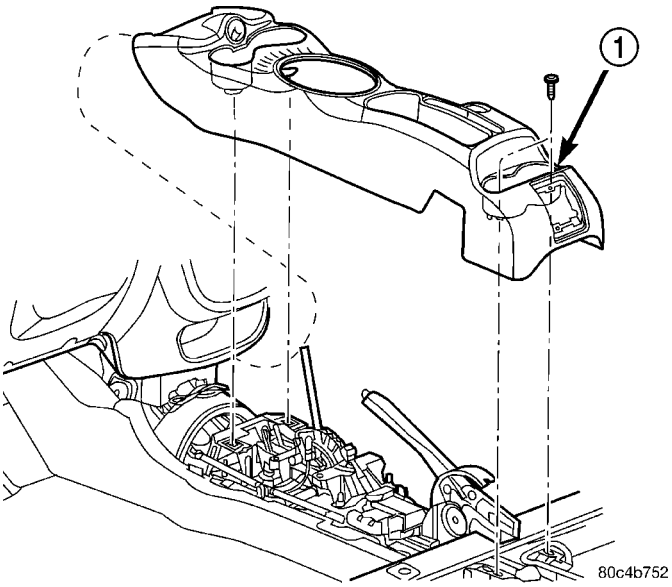

Fig. 170 Center Console Removal/Installation— Typical

1 - CENTER CONSOLE

(4) Remove crossover cable retaining clip and disconnect from shift lever (Fig. 171).

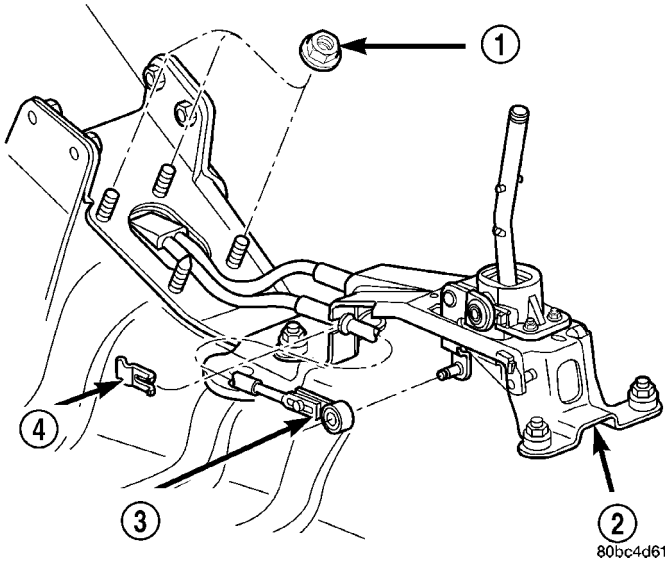

Fig. 171 Crossover Cable at Shifter Assembly

1 - GROMMET PLATE NUT
2 - SHIFTER
3 - CROSSOVER CABLE
4 - CLIP

GEAR SHIFT MECHANISM (Continued)

(5) Remove selector cable retaining clip and disconnect from shift lever (Fig. 172).

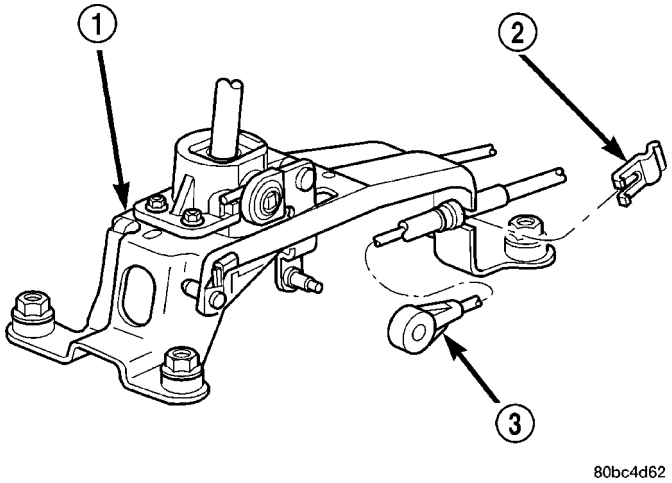

Fig. 172 Selector Cable at Shifter Assembly

1 - SHIFTER
2 - CLIP
3 - SELECTOR CABLE

(6) Remove four shifter assy.-to-floor pan nuts and remove shifter from vehicle (Fig. 173).

INSTALLATION

(1) Install shifter assy. to floor pan (Fig. 173). Install and tighten four nuts to 12 N·m (105 in. lbs.) torque.

(2) Install selector cable to shifter lever and secure cable to shifter bracket. Install clip (Fig. 172).

(3) Install crossover cable to shifter lever and secure cable to shifter bracket. Install clip (Fig. 171).

NOTE: Only the crossover cable is adjustable. The selector cable does not have any adjustment capabilities.

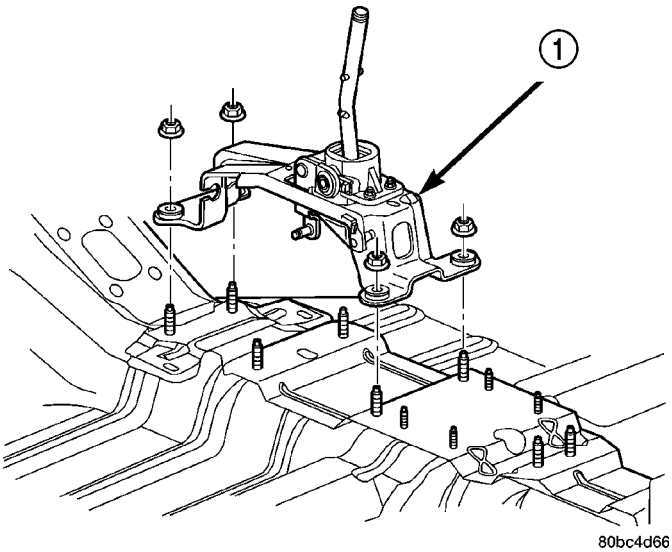

Fig. 173 Shifter Assy. Removal/Installation

1 - SHIFTER ASSEMBLY

(4) Adjust crossover cable. (Refer to 21 - TRANSMISSION/TRANSAXLE/MANUAL/GEAR SHIFT CABLE - ADJUSTMENTS)

(5) Install center console assembly (Fig. 170). Install rear power window switch (if equipped) and fasten harness to console.

(6) Position gearshift boot (Fig. 169) over the gearshift mechanism and engage tab on mount ring at front to opening in console. Apply hand pressure to engage bosses on mount ring of boot to console opening slots.

(7) Position gearshift knob hole over the gearshift mechanism (Fig. 168) and align the shift pattern.

(8) Strike knob with rubber mallet to engage knob to mechanism.

(9) Verify that shift pattern is aligned properly.

INPUT SHAFT

DESCRIPTION

The input shaft assembly (Fig. 174) is part of the transaxle geartrain, is driven by the clutch assembly, and meshes with the intermediate shaft assembly. The input shaft consists of the following major components:

- Input mainshaft
- Third Speed Gear
- Fourth Speed Gear
- Fifth Speed Gear
- 1st Gear (Fixed)
- 2nd Gear (Fixed)
- 3/4 Synchronizer
- 5th Gear Synchronizer

The input shaft assembly is supported by a caged roller bearing at the front of the transaxle, and a sealed roller bearing at the rear of the transaxle.

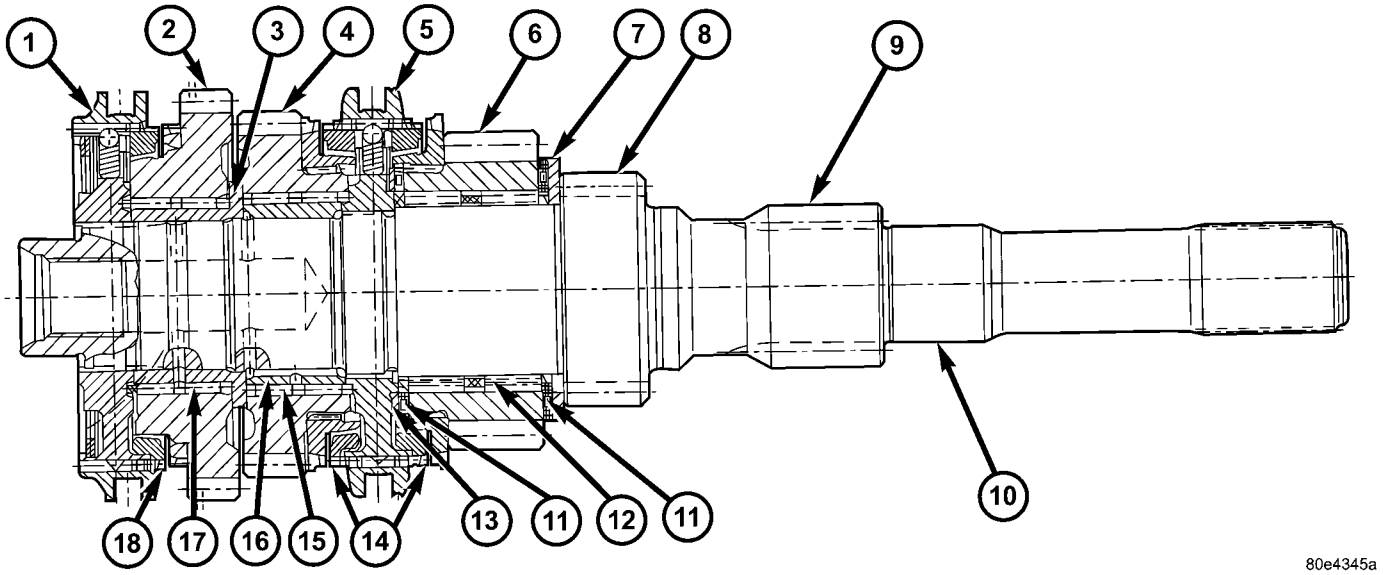

Fig. 174 Input Shaft Cross Section

1 - 5TH SYNCRHONIZER
2 - 5TH SPEED GEAR
3 - 5TH GEAR BUSHING
4 - 4TH SPEED GEAR
5 - 3/4 SYNCHRONIZER
6 - 3RD SPEED GEAR
7 - THRUST PLATE
8 - 2ND GEAR (FIXED)
9 - 1ST GEAR (FIXED)
10 - INPUT SHAFT
11 - THRUST WASHER
12 - 3RD GEAR BEARING
13 - THRUST WASHER
14 - BLOCKER RING
15 - 4TH GEAR BEARING
16 - BUSHING
17 - BEARING
18 - BLOCKER RING

INPUT SHAFT (Continued)

DISASSEMBLY

(1) Remove 5th gear and synchronizer from input shaft using Tool 8919 and bearing splitter (Fig. 175).

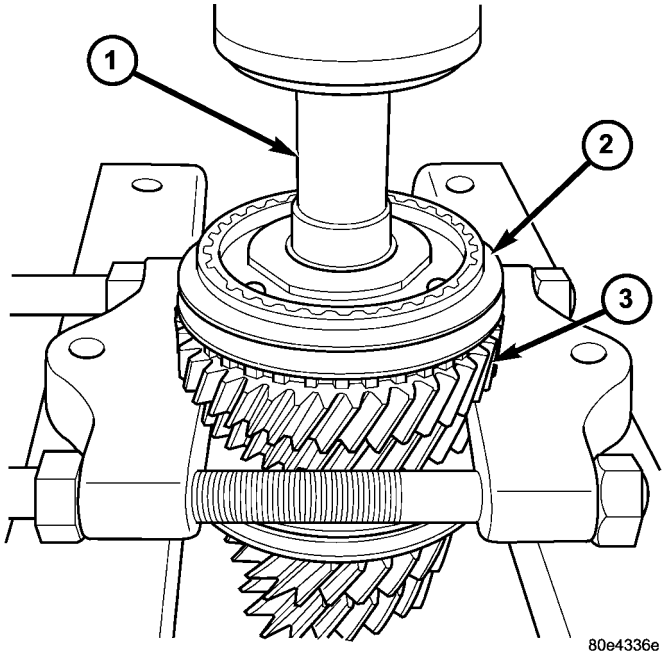

Fig. 175 5th Gear and Synchronizer Removal

1 - TOOL 8919
2 - 5TH GEAR SYNCHRONIZER
3 - 5TH GEAR

(2) Remove 5th gear needle bearing (Fig. 176) (Fig. 181).

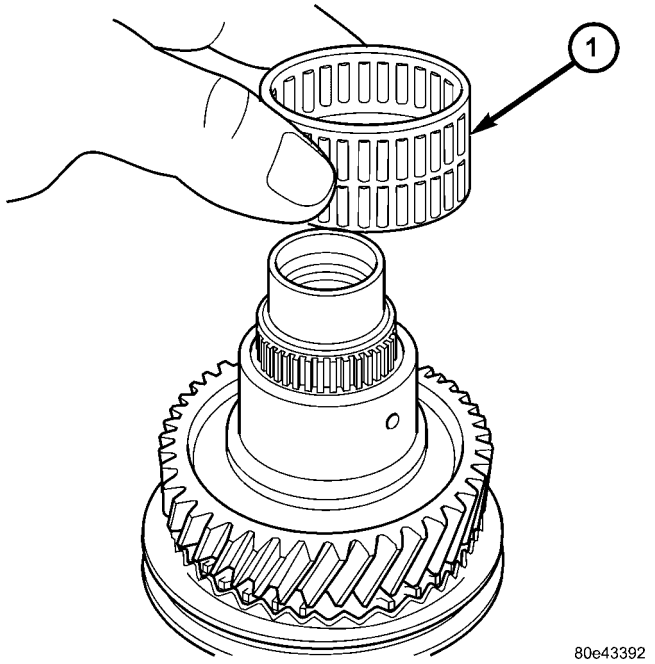

Fig. 176 5th Gear Needle Bearing Removal

1 - NEEDLE BEARING

(3) Remove 3rd & 4th gears, synchronizer, and 5th gear bearing bushing using Tool 8919 and bearing splitter (Fig. 177).

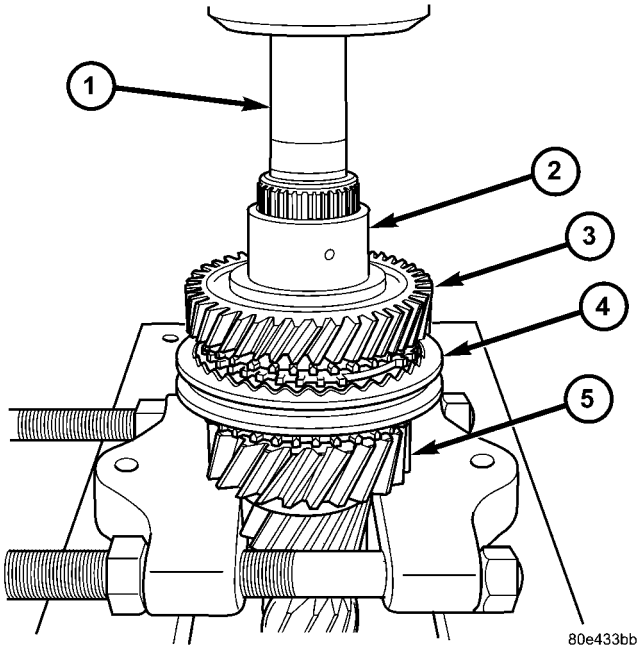

Fig. 177 Bushing, 3rd/4th Gear and Synchronizer Removal

1 - TOOL 8919
2 - 5TH GEAR BUSHING
3 - 4TH GEAR
4 - 3/4 SYNCHRONIZER
5 - 3RD GEAR

(4) Remove both 3rd gear needle bearings and thrust washer (Fig. 178) (Fig. 179).

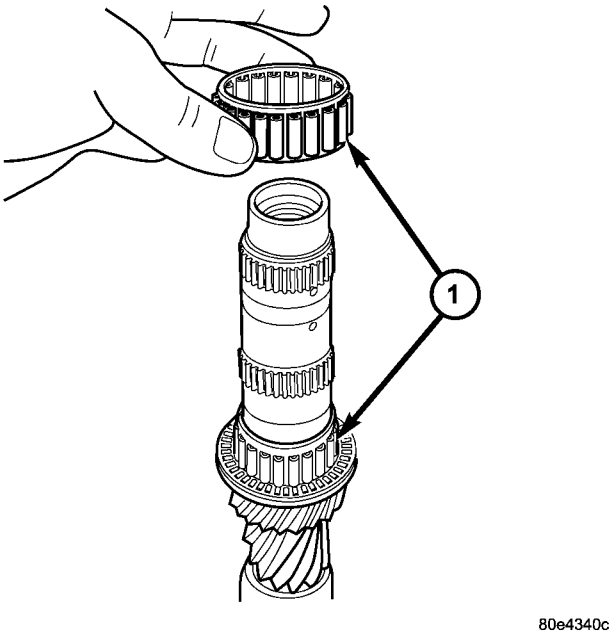

Fig. 178 3rd Gear Needle Bearing Removal

1 - NEEDLE BEARINGS

INPUT SHAFT (Continued)

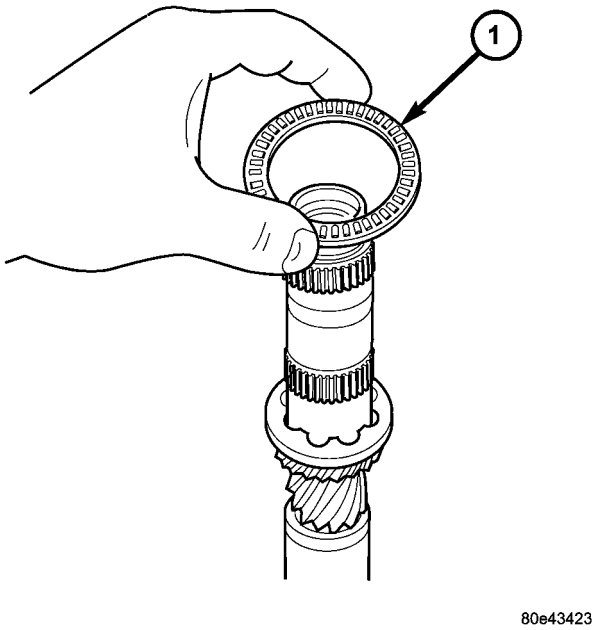

Fig. 179 3rd Gear Thrust Washer Removal

1 - THRUST WASHER

(5) If necessary, remove 3rd gear thrust plate (Fig. 180).

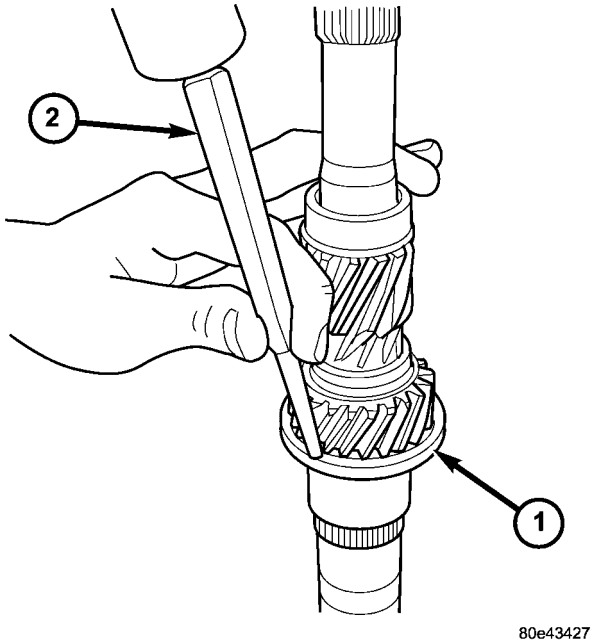

Fig. 180 Thrust Plate Removal

1 - THRUST PLATE
2 - PUNCH/DRIFT

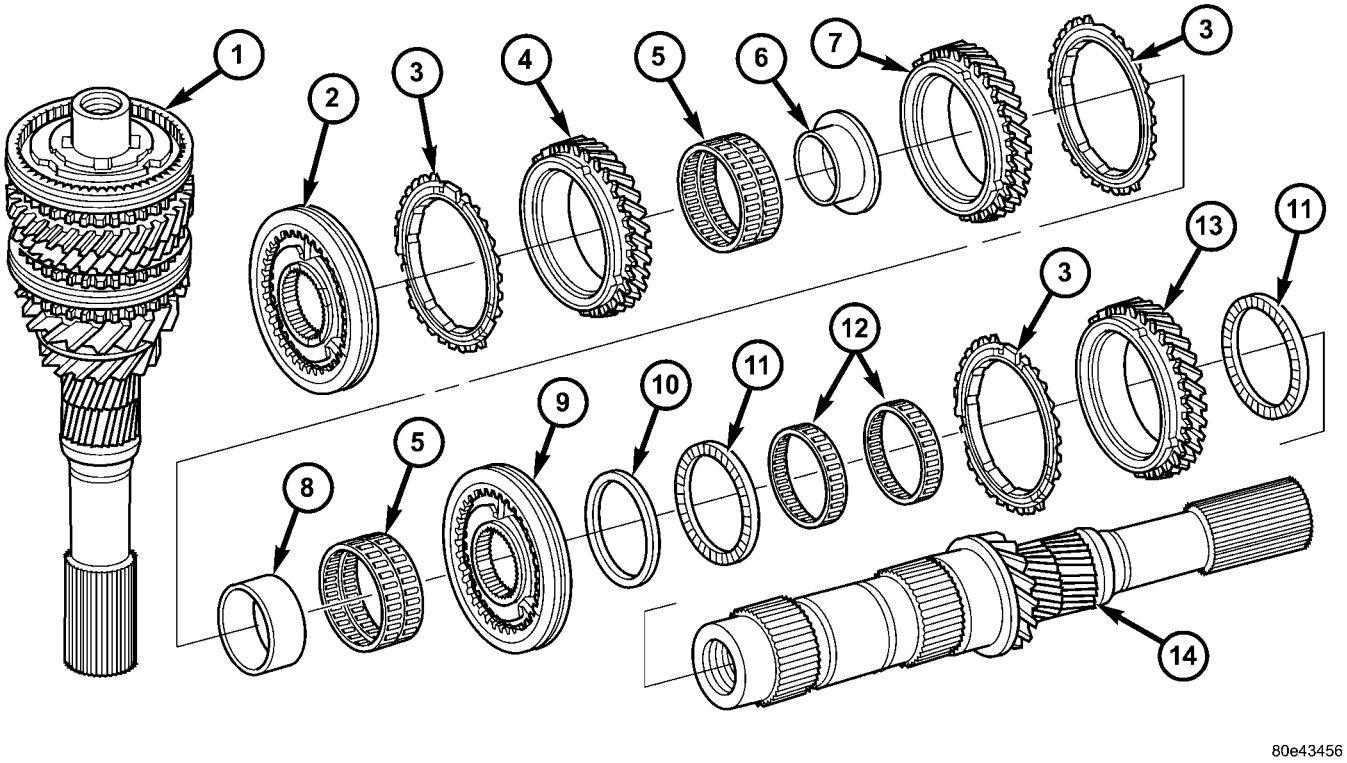

Fig. 181 Input Shaft Disassembly/Assembly

1 - INPUT SHAFT ASSEMBLY
2 - SYNCRHONIZER (5TH GEAR)
3 - BLOCKER RING
4 - 5TH GEAR
5 - NEEDLE BEARING
6 - BUSHING
7 - 4TH GEAR
8 - BUSHING
9 - SYNCHRONIZER (4TH GEAR)
10 - THRUST WASHER
11 - THRUST BEARING
12 - NEEDLE BEARING
13 - 3RD GEAR
14 - INPUT SHAFT

INPUT SHAFT (Continued)

ASSEMBLY

(1) Install 3rd gear thrust washer (Fig. 183) (Fig. 182).

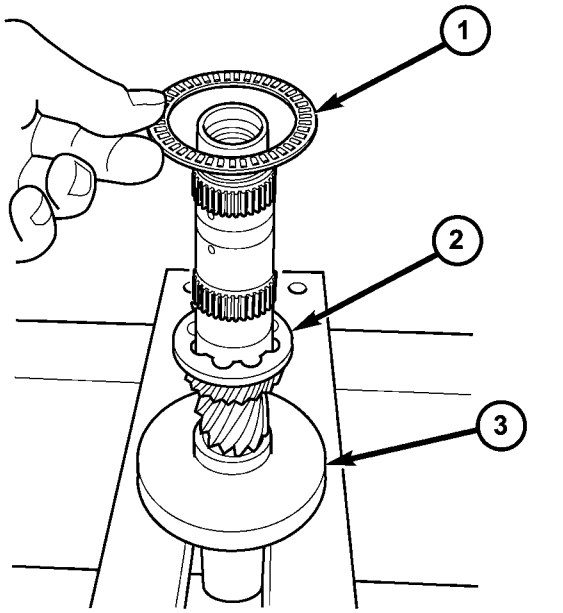

Fig. 183 3rd Gear Thrust Bearing Installation

1 - THRUST BEARING
2 - THRUST PLATE
3 - TOOL 8917

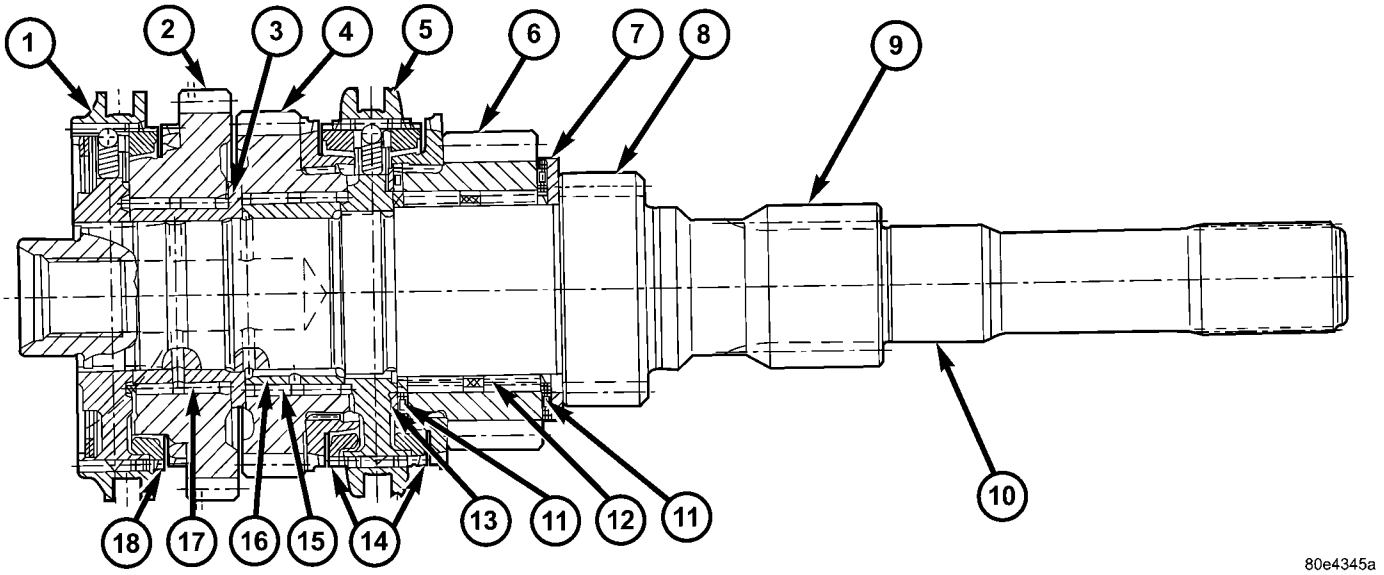

Fig. 182 Input Shaft Cross Section

1 - 5TH SYNCRHONIZER
2 - 5TH SPEED GEAR
3 - 5TH GEAR BUSHING
4 - 4TH SPEED GEAR
5 - 3/4 SYNCHRONIZER
6 - 3RD SPEED GEAR
7 - THRUST PLATE
8 - 2ND GEAR (FIXED)
9 - 1ST GEAR (FIXED)
10 - INPUT SHAFT
11 - THRUST WASHER
12 - 3RD GEAR BEARING
13 - THRUST WASHER
14 - BLOCKER RING
15 - 4TH GEAR BEARING
16 - BUSHING
17 - BEARING
18 - BLOCKER RING

INPUT SHAFT (Continued)

(2) Install 3rd Gear needle bearings (Fig. 184).

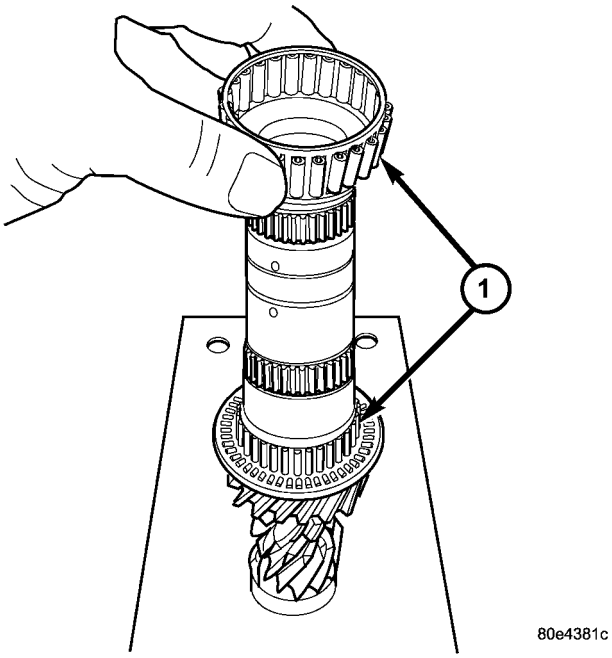

Fig. 184 3rd Gear Needle Bearing Installation

1 - NEEDLE BEARINGS (2)

(3) Install 3rd gear (Fig. 185).

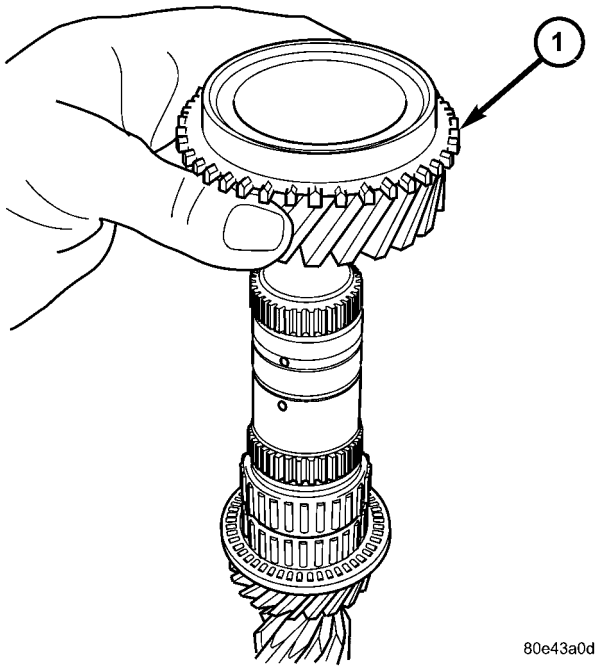

Fig. 185 3rd Gear Installation

1 - 3RD GEAR

(4) Install 3rd gear blocker ring (Fig. 186).

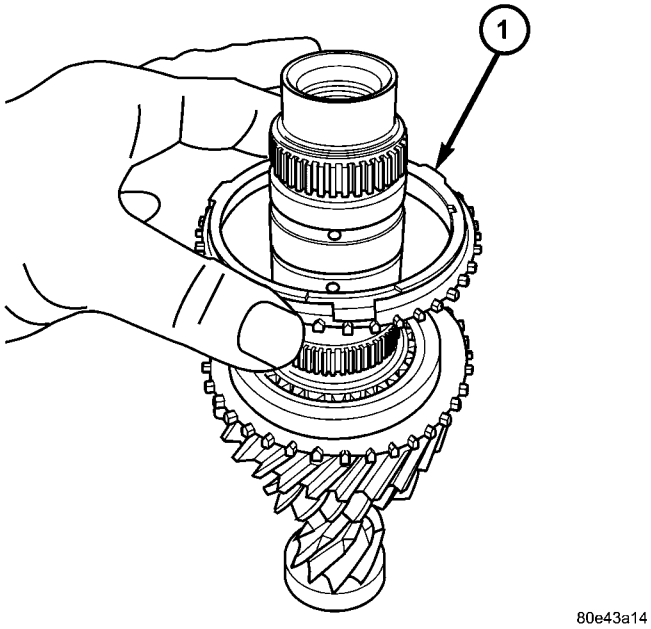

Fig. 186 3rd Gear Blocker Ring Installation

1 - BLOCKER RING

(5) Install 3rd gear thrust bearing (Fig. 187).

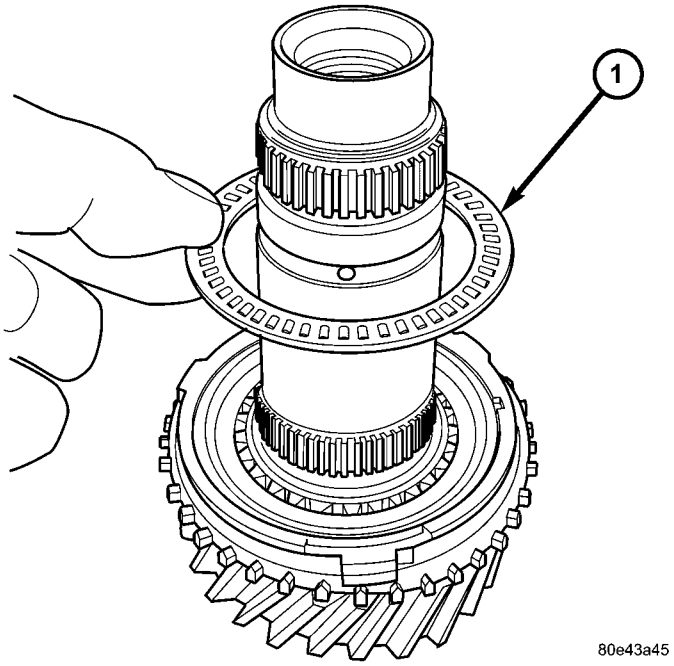

Fig. 187 3rd Gear Thrust Bearing Installation

1 - THRUST BEARING

INPUT SHAFT (Continued)

(6) Install 3rd gear thrust washer.

(7) Install 3rd/4th gear synchronizer to shaft. **Before pressing synchronizer onto shaft, lift upward on 3rd gear and blocker ring to engage the guides of the blocker ring to the recesses of the synchronizer body (Fig. 188).** Press synchronizer into place using Tool 6448A.

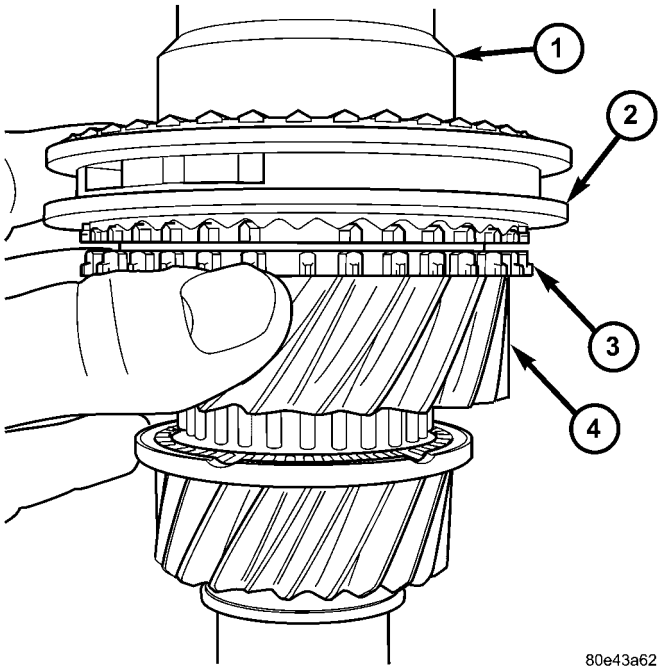

Fig. 188 3/4 Synchro Installation

1 - TOOL 6448A
2 - 3/4 SYNCHRONIZER
3 - BLOCKER RING
4 - 3RD GEAR

(8) Install 4th gear blocker ring (Fig. 189), engaging guides in ring to recesses in synchronizer body.

(9) Install and press 4th gear needle bearing bushing using Tool 8922 (Fig. 190) (Fig. 191).

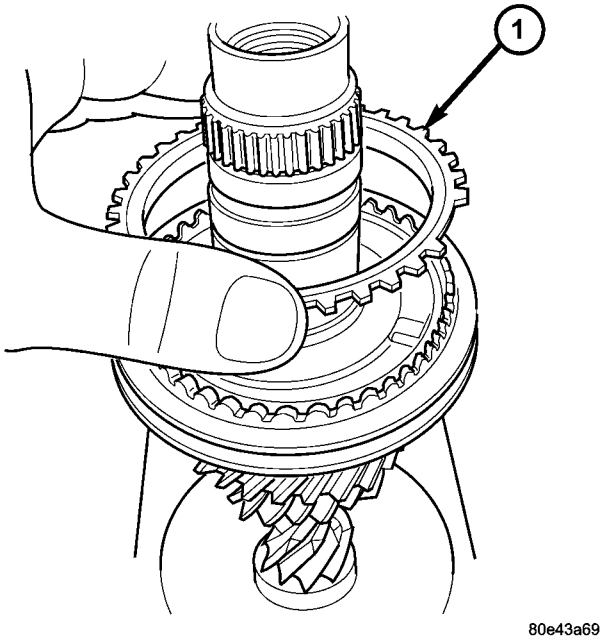

Fig. 189 4th Gear Blocker Ring Installation

1 - BLOCKER RING

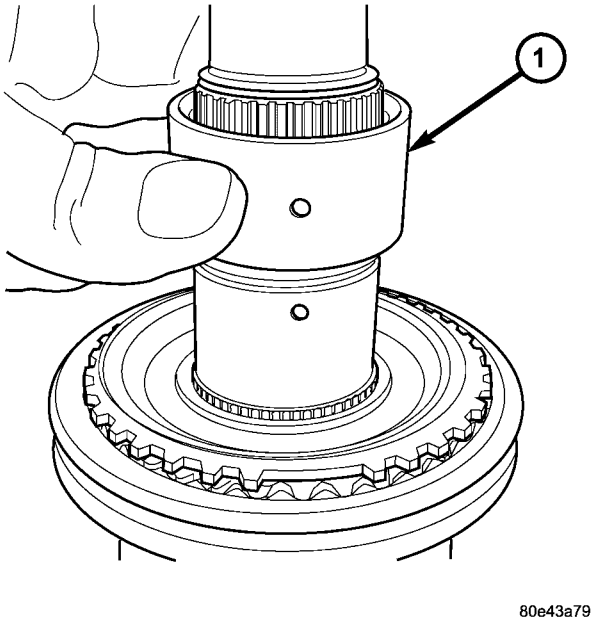

Fig. 190 Install 4th Gear Bushing

1 - BUSHING

INPUT SHAFT (Continued)

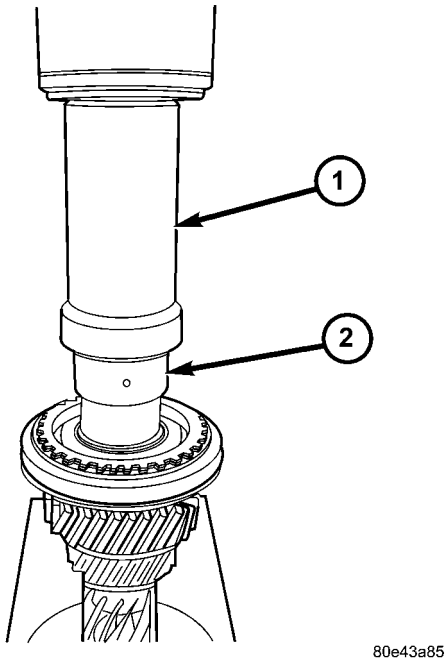

Fig. 191 4th Gear Bushing Installation

1 - TOOL 6448A
2 - BUSHING

(10) Install 4th gear needle bearing (Fig. 192).

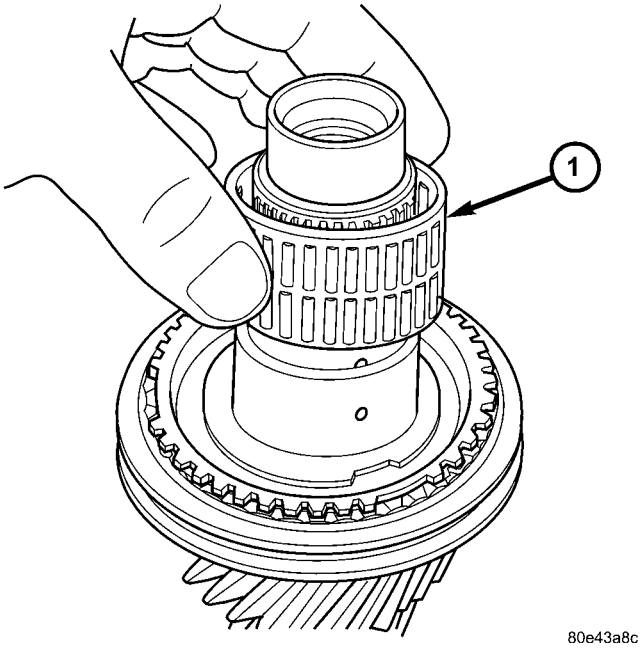

Fig. 192 Install 4th Gear Needle Bearing

1 - NEEDLE BEARING

(11) Install 4th gear (Fig. 193).

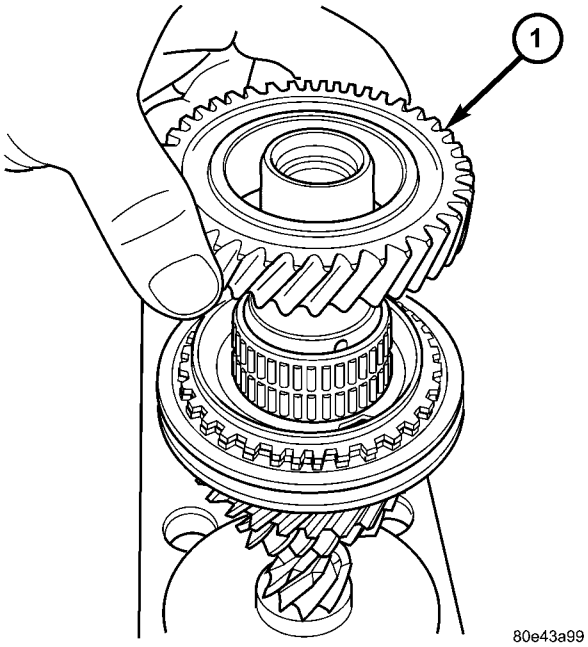

Fig. 193 Install 4th Gear

1 - 4TH GEAR

(12) Install 5th gear bushing (Fig. 194).

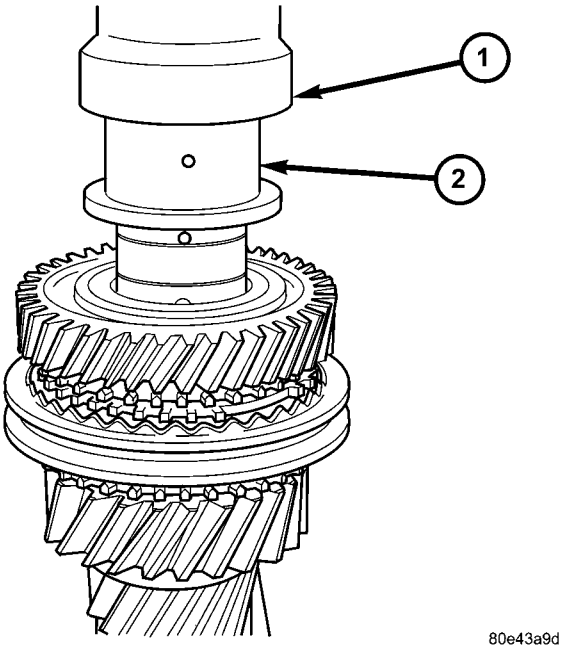

Fig. 194 Install 5th Gear Bushing

1 - TOOL 6448A
2 - BUSHING

INPUT SHAFT (Continued)

(13) Install 5th gear needle bearing (Fig. 195).

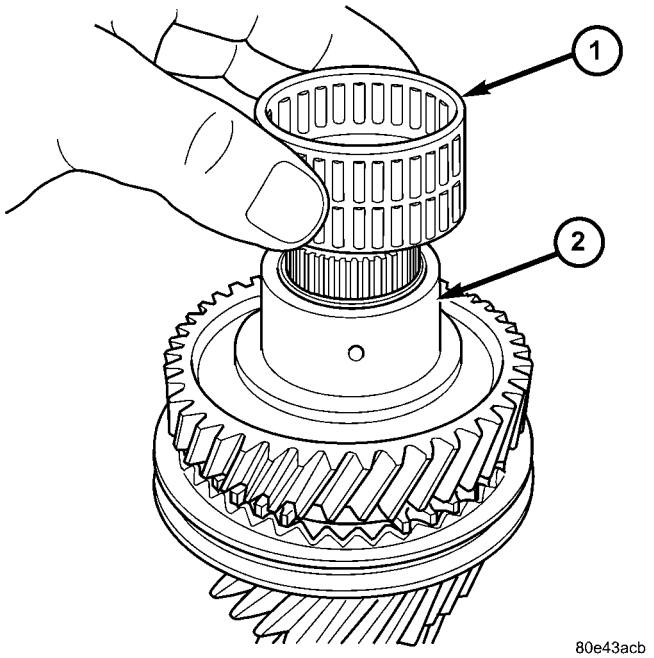

Fig. 195 Install 5th Gear Needle Bearing

1 - NEEDLE BEARING
2 - BUSHING

(14) Install 5th gear (Fig. 196).

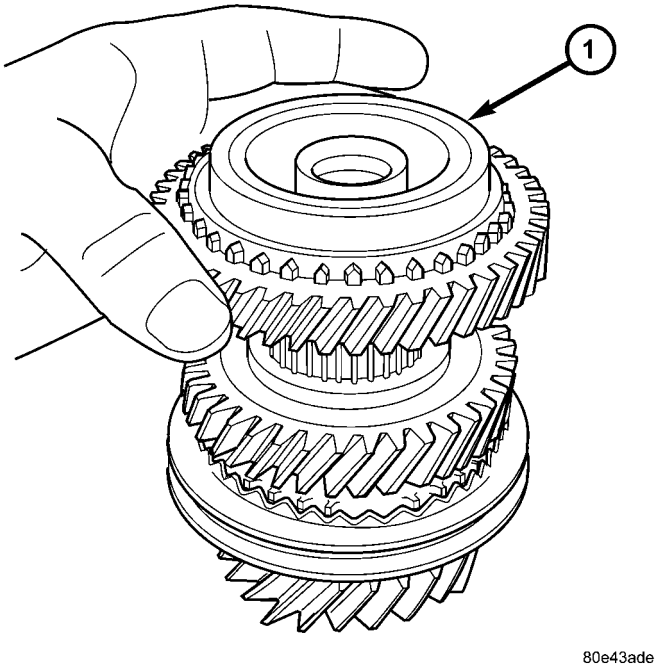

Fig. 196 Install 5th Gear

1 - 5TH GEAR

(15) Install 5th gear blocker ring (Fig. 197).

(16) Install 5th gear synchronizer to shaft (Fig. 198). Position Tool 8922 over synchronizer and begin

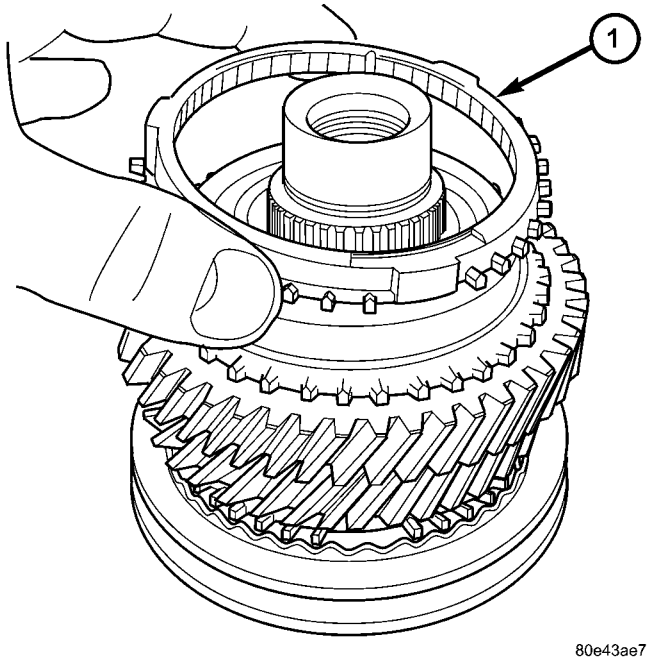

Fig. 197 Install 5th Gear Blocker Ring

1 - BLOCKER RING

press operation. **While pressing synchronizer onto shaft, lift upward on 5th gear and blocker ring to engage the guides of the blocker ring to the recesses of the synchronizer body (Fig. 199).**

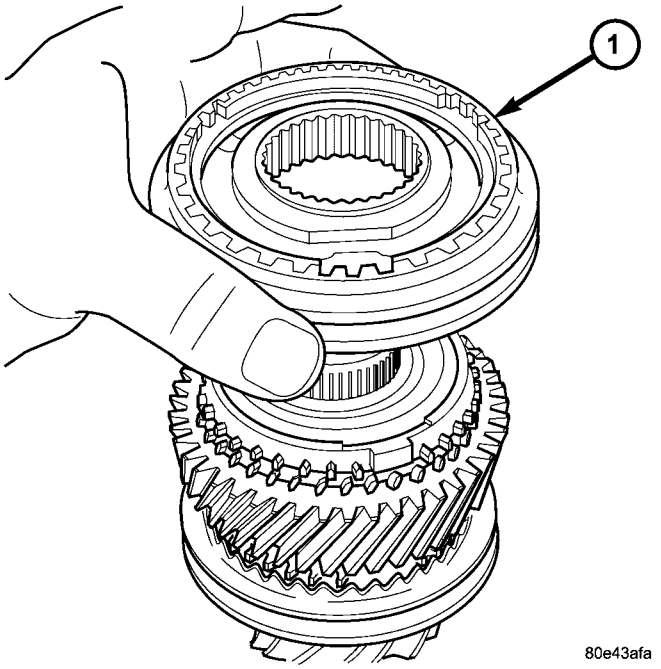

Fig. 198 Install 5th Gear Synchronizer

1 - 5TH GEAR SYNCHRONIZER

INPUT SHAFT (Continued)

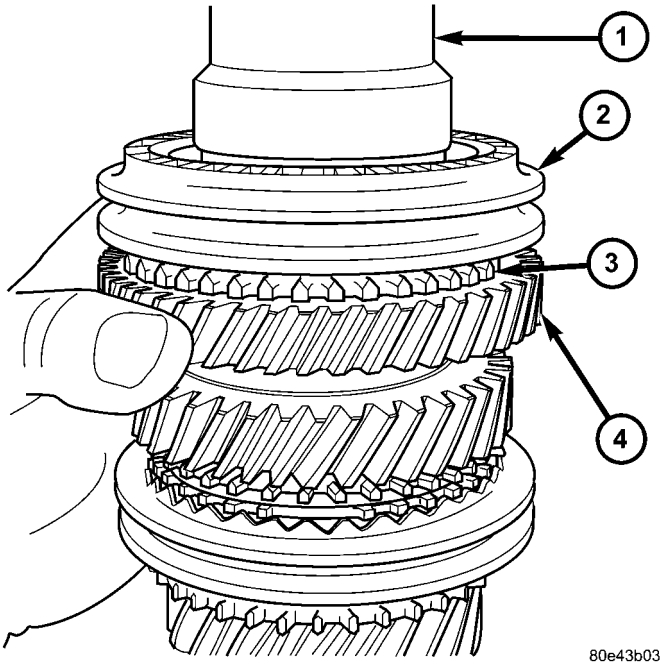

Fig. 199 5th Gear Synchronizer Installation

1 - TOOL 6448A
2 - 5TH GEAR SYNCHRONIZER
3 - BLOCKER RING
4 - 5TH GEAR

OUTPUT SHAFT

DESCRIPTION

The output shaft assembly (Fig. 200) is part of the transaxle geartrain, meshes with and is driven by the input shaft, drives the differential via an integrated pinion gear, and consists of the following components:

- Output Mainshaft
- 1st Speed Gear
- 2nd Speed Gear
- 3rd Gear (Fixed)
- 4th Gear (Fixed)
- 5th Gear (Fixed)
- 1/2 Synchronizer

The output shaft is supported by a caged cylindrical roller bearing at the front of the transaxle, and a sealed ball bearing at the rear of the transaxle.

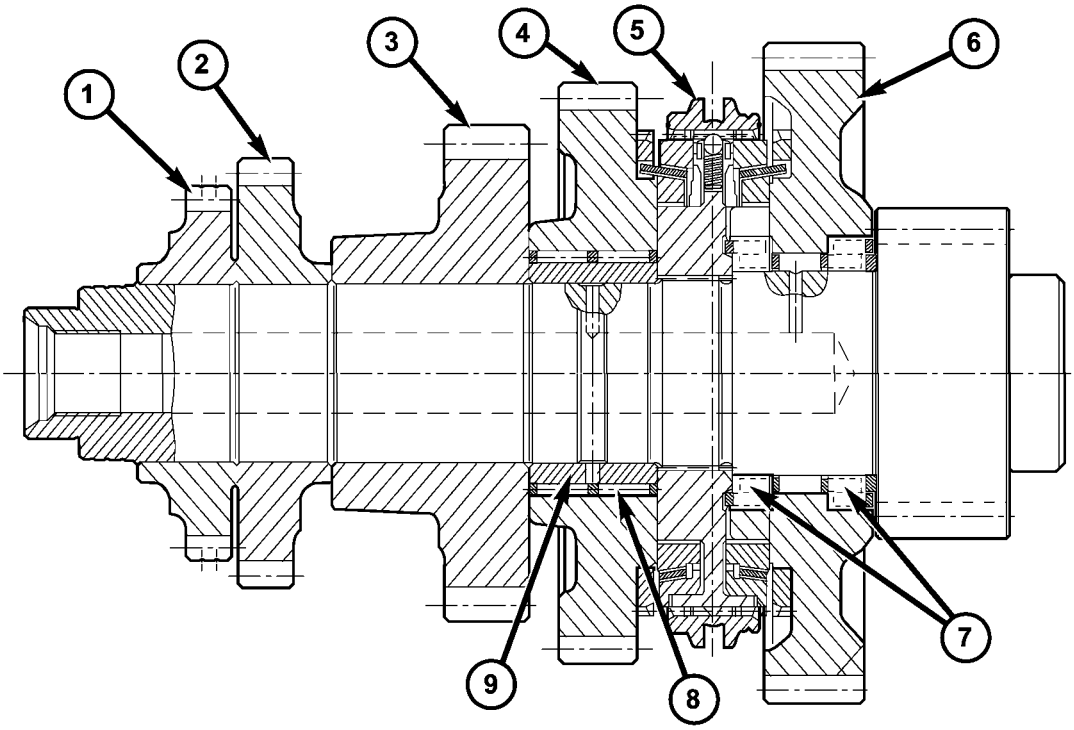

Fig. 200 Output Shaft Section View

1 - FIFTH GEAR
2 - FOURTH GEAR
3 - THIRD GEAR
4 - SECOND GEAR
5 - 1/2 SYNCHRONIZER
6 - FIRST GEAR
7 - ROLLER BEARING (2)
8 - NEEDLE BEARING
9 - BUSHING

OUTPUT SHAFT (Continued)

DISASSEMBLY

(1) Install output shaft to fixture 8925-3. Use split plate 8925-2 on diesel models, and 8925-4 on turbo models as shown in (Fig. 201).

(2) Remove 4th and 5th gears simultaneously. Install protective sleeve 8918 to output shaft and press 4th and 5th gears off of shaft (Fig. 201).

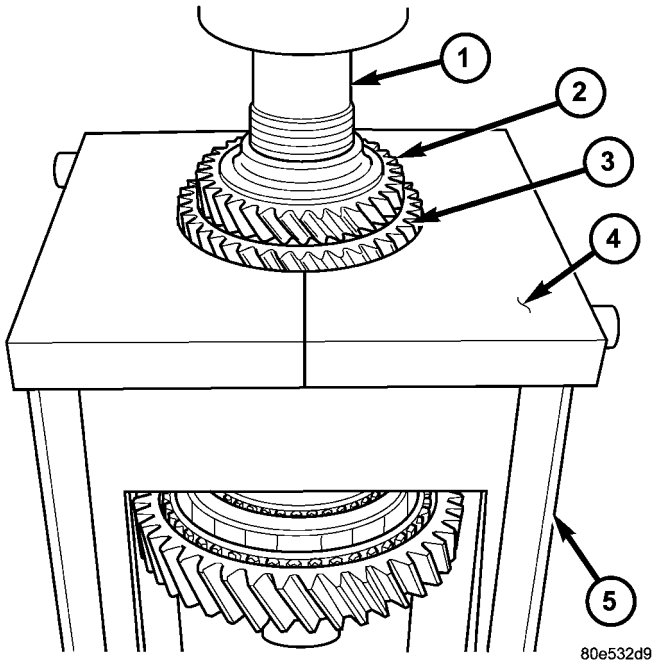

Fig. 201 4th/5th Gear Removal

1 - TOOL 8918
2 - 5TH GEAR
3 - 4TH GEAR
4 - PLATE 8925-2 / 8925-4
5 - FIXTURE 8925-3

(3) Install output shaft to fixture 8925-3 using split plate 8925-1 as shown in (Fig. 202).

(4) Remove 3rd gear. Install protective sleeve 8918 to output shaft and press 3rd gear off of shaft (Fig. 202).

(5) Remove second gear from output shaft.

(6) Remove second gear needle bearing.

(7) Install output shaft to fixture 8925-3 using split plate 8925-2 (inverted) (Fig. 203).

(8) Install protective sleeve 8918 to output shaft and simultaneously press off 2nd gear bushing, 1-2 synchronizer, and 1st gear (Fig. 203).

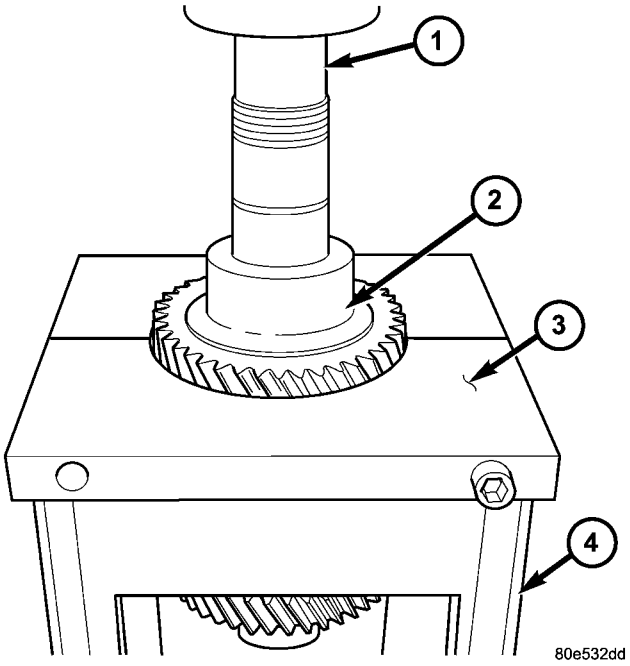

Fig. 202 3rd Gear Removal

1 - TOOL 8918
2 - 3RD GEAR
3 - SPLIT PLATE 8925-1
4 - FIXTURE 8925-3

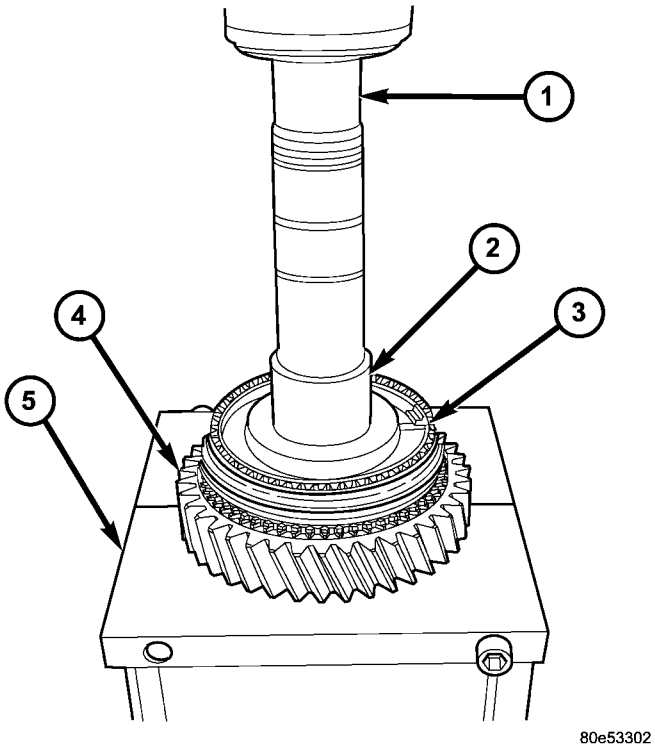

Fig. 203 1st Gear, Synchro, and Bushing Removal

1 - TOOL 8918
2 - BUSHING
3 - 1-2 SYNCHRONIZER
4 - 1ST GEAR
5 - SPLIT PLATE 8925-2 (INVERTED)

OUTPUT SHAFT (Continued)

(9) Remove 1st gear needle bearings (2) from shaft. Inspect thrust washer (fixed to shaft) (Fig. 204).

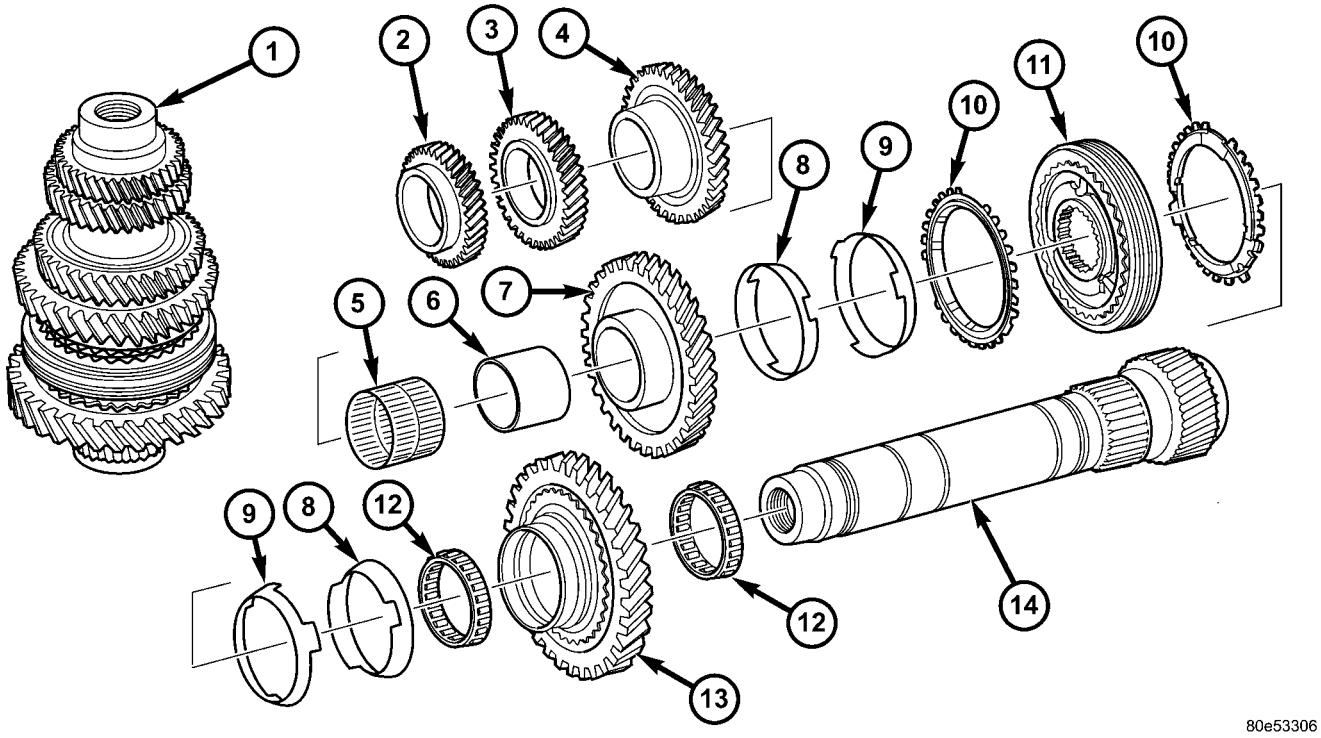

Fig. 204 Output Shaft Assembly

1 - OUTPUT SHAFT ASSEMBLY
2 - 5TH GEAR
3 - 4TH GEAR
4 - 3RD GEAR
5 - 2ND GEAR NEEDLE BEARING
6 - BUSHING
7 - 2ND GEAR
8 - FRICTION RING
9 - CONE
10 - BLOCKER RING
11 - 1-2 SYNCHRONIZER
12 - 1ST GEAR NEEDLE BEARING (2)
13 - 1ST GEAR
14 - OUTPUT SHAFT

OUTPUT SHAFT (Continued)

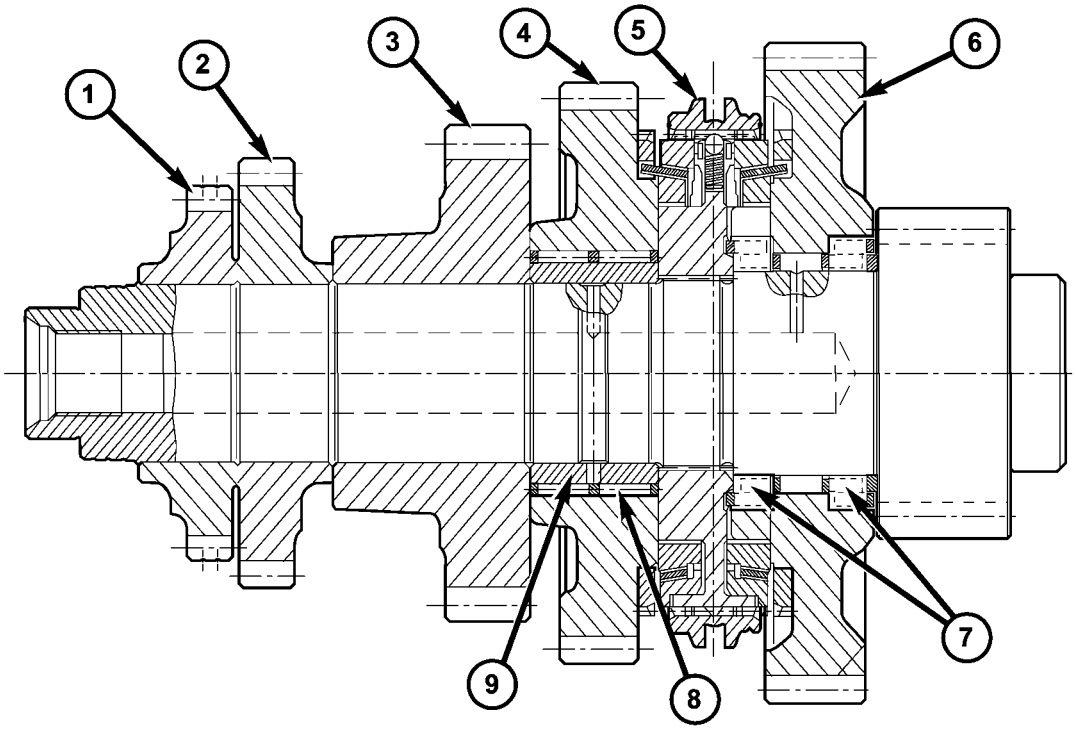

80e5330a

Fig. 205 Output Shaft Section View

1 - FIFTH GEAR
2 - FOURTH GEAR
3 - THIRD GEAR
4 - SECOND GEAR
5 - 1/2 SYNCHRONIZER
6 - FIRST GEAR
7 - ROLLER BEARING (2)
8 - NEEDLE BEARING
9 - BUSHING

ASSEMBLY

(1) Install first gear roller bearing to shaft with smaller diameter cage ring facing outward (Fig. 206) (Fig. 205).

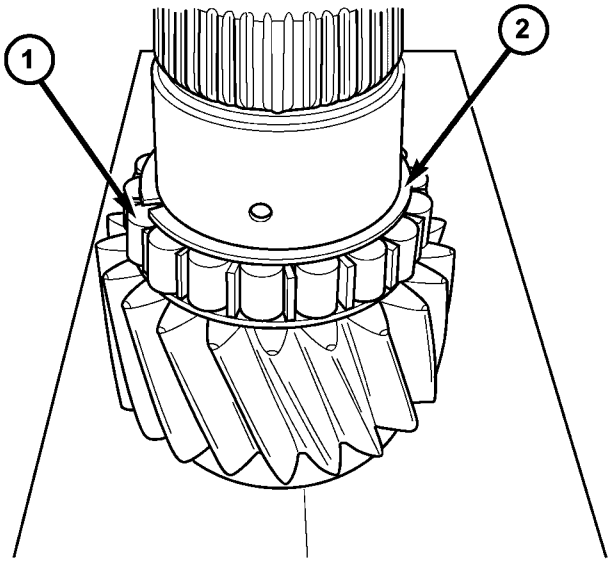

80e96a81

Fig. 206 First Gear Roller Bearing

1 - ROLLER BEARING
2 - SMALLER RING UP

OUTPUT SHAFT (Continued)

(2) Install first gear (Fig. 207).

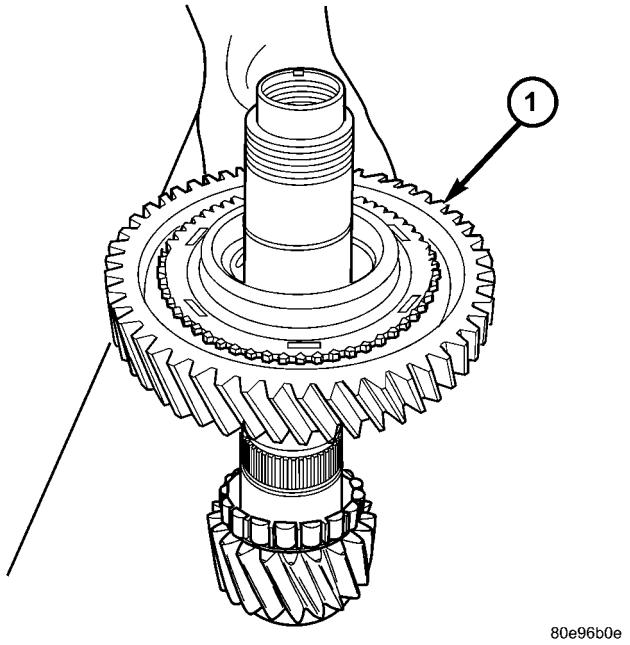

Fig. 207 First Gear

1 - FIRST GEAR

(3) Install other first gear roller bearing with larger diameter cage ring facing outward (Fig. 208).

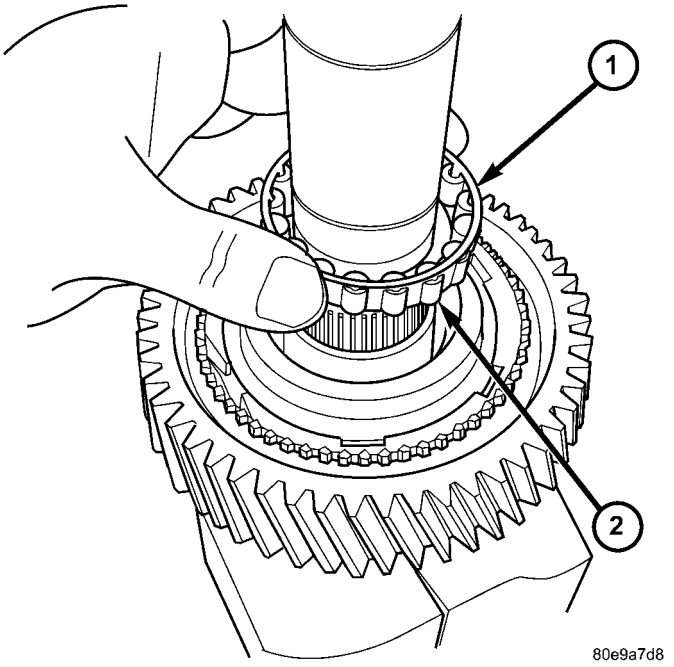

Fig. 208 First Gear Roller Bearing

1 - LARGER RING UP
2 - ROLLER BEARING

(4) Install first gear friction cone (Fig. 209).

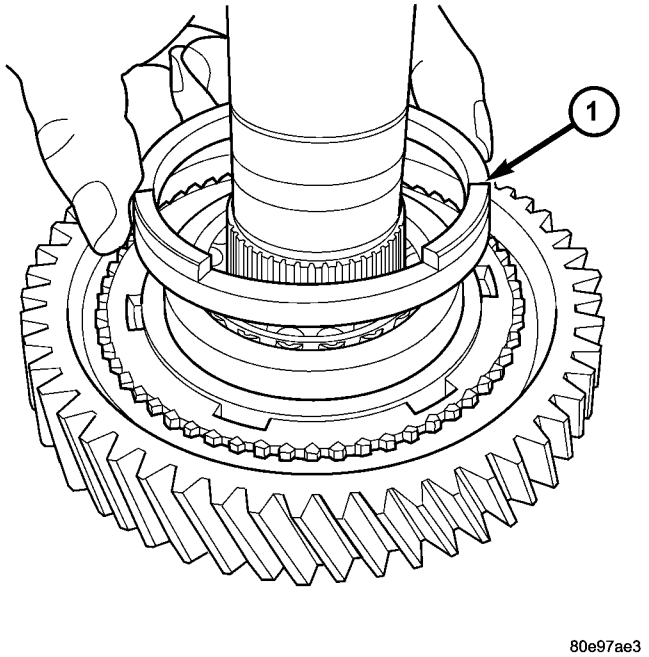

Fig. 209 First Gear Friction Cone

1 - FRICTION CONE

(5) Install first gear friction ring (Fig. 210). Align teeth of friction ring with notches in gear.

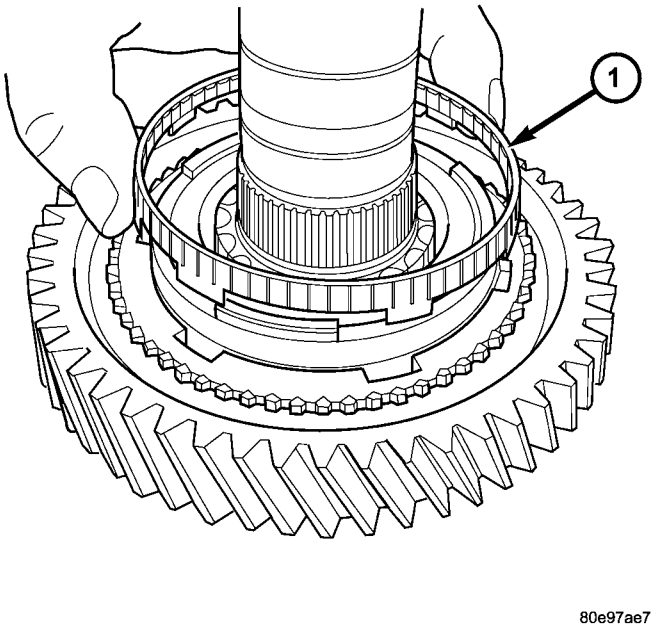

Fig. 210 First Gear Friction Ring

1 - FRICTION RING

OUTPUT SHAFT (Continued)

(6) Install first gear blocker ring (Fig. 211).

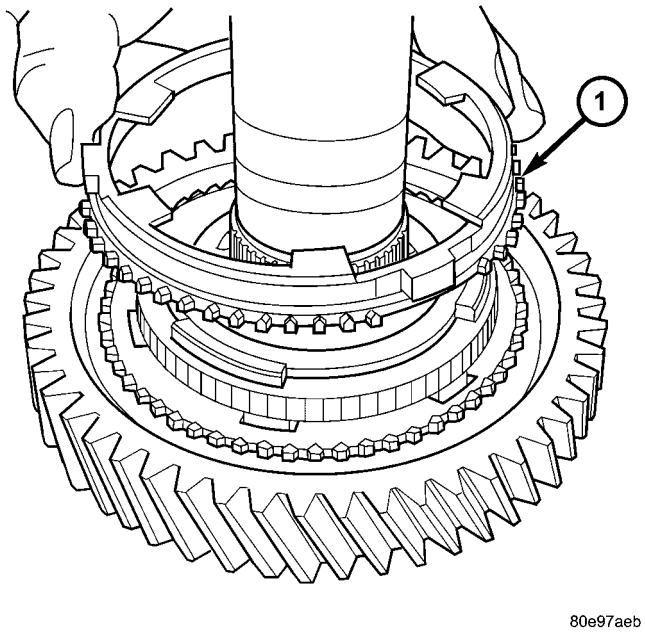

Fig. 211 First Gear Blocker Ring

1 - BLOCKER RING

(7) Install 1/2 synchronizer hub with Tool 6448A (Fig. 212). Line up blocker ring with hub as shown in (Fig. 213).

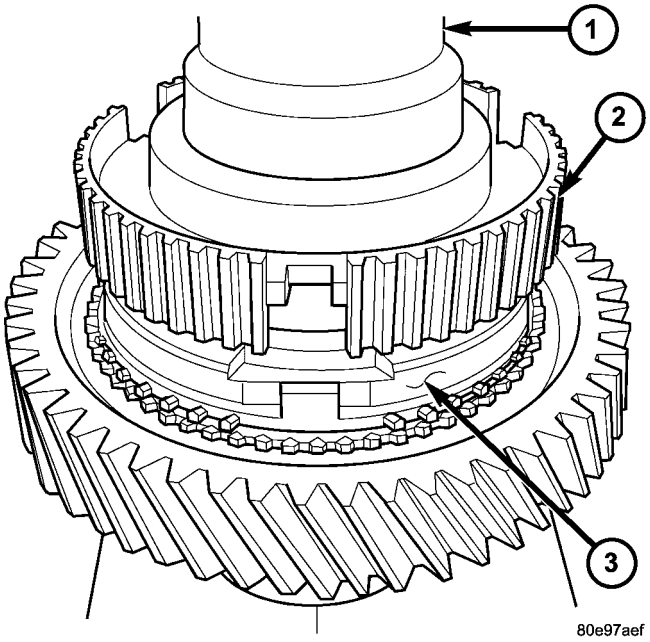

Fig. 212 Install First Gear Synchronizer Hub

1 - TOOL 6448A
2 - SYNCHRONIZER HUB
3 - BLOCKER RING

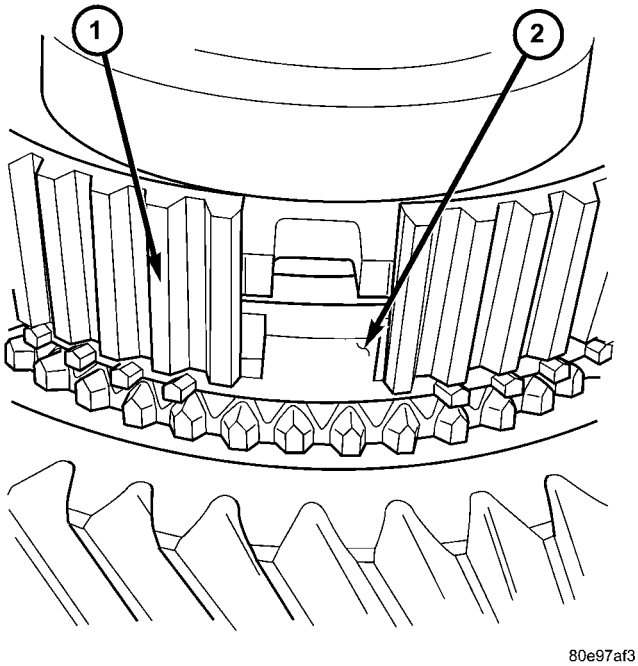

Fig. 213 Synchronizer Hub/Ring Alignment

1 - SYNCHRONIZER HUB
2 - BLOCKER RING

(8) Install 1/2 synchronizer sleeve with groove towards first gear (Fig. 214).

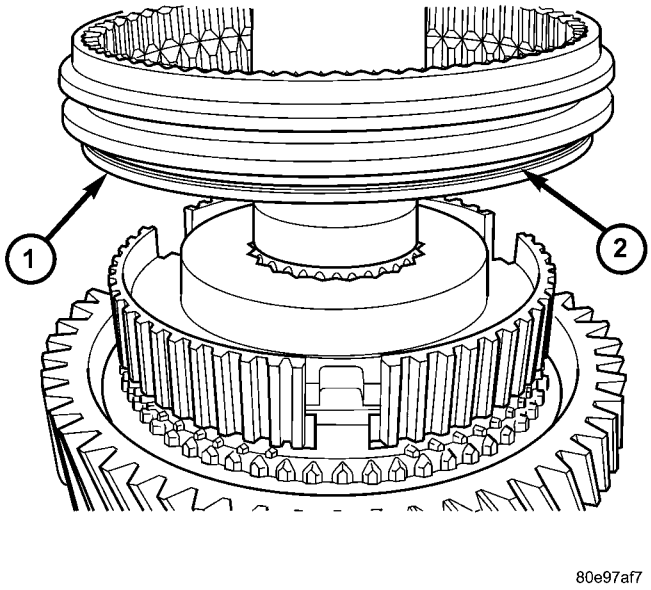

Fig. 214 Synchronizer Sleeve Orientation

1 - SYNCHRONIZER SLEEVE
2 - GROOVE TOWARDS FIRST GEAR

OUTPUT SHAFT (Continued)

(9) Install three synchronizer strut assemblies (Fig. 215).

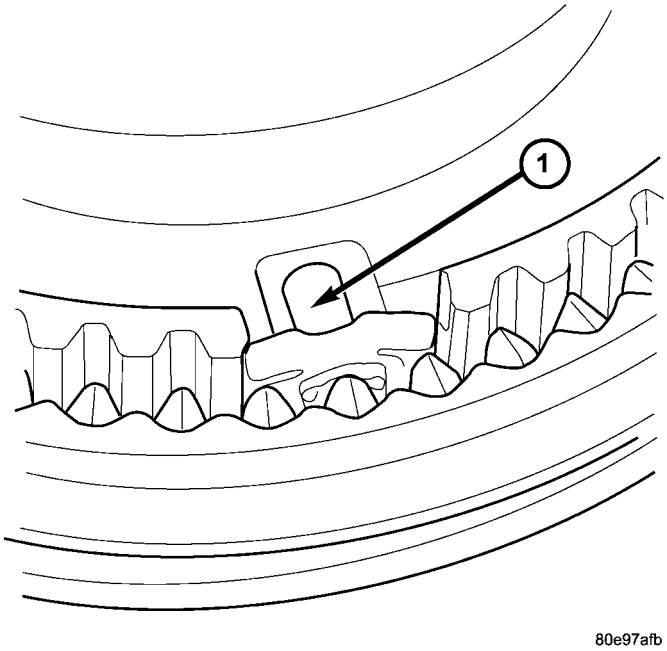

Fig. 215 Synchronizer Strut

1 - SYNCHRONIZER STRUT

(10) Using Tool 6448A, install second gear bearing bushing until it bottoms on synchronizer hub (Fig. 216).

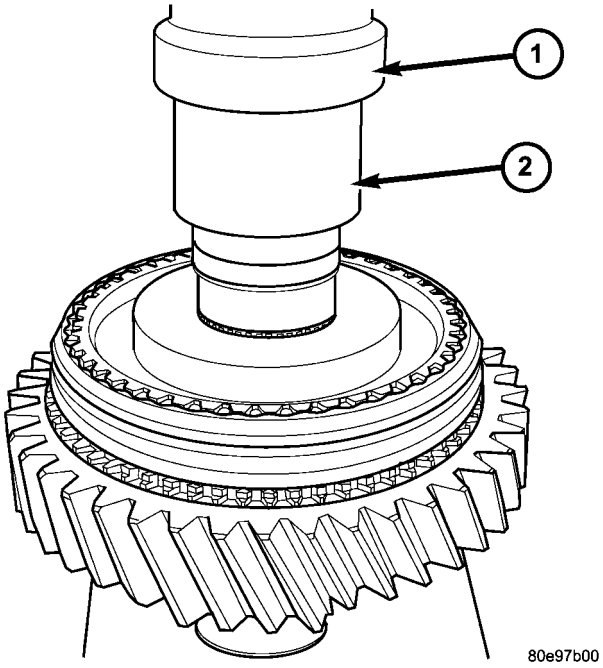

Fig. 216 Install Second Gear Bearing Bushing

1 - TOOL 6448A
2 - BUSHING

(11) Install second gear needle bearing (Fig. 217).

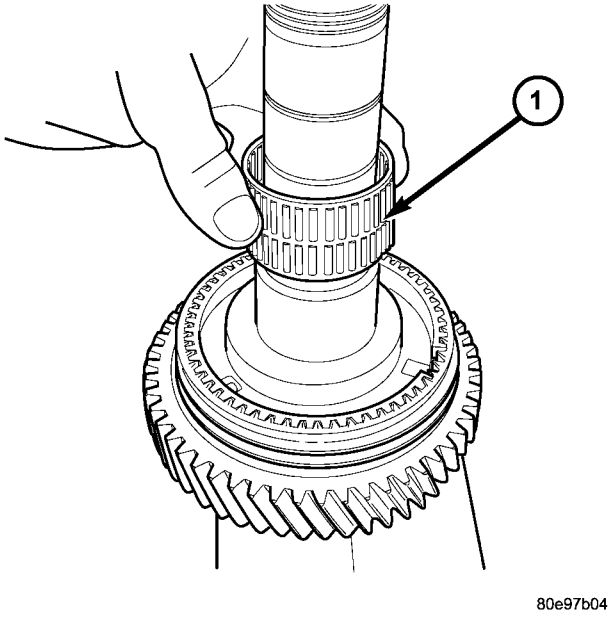

Fig. 217 Second Gear Needle Bearing

1 - NEEDLE BEARING

(12) Install second gear blocker ring (Fig. 218).

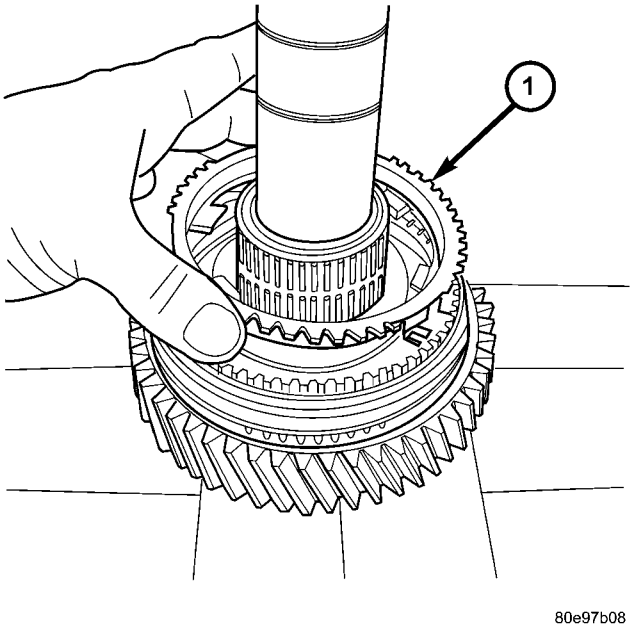

Fig. 218 Second Gear Synchronizer Ring

1 - BLOCKER RING

OUTPUT SHAFT (Continued)

(13) Install second gear friction ring (Fig. 219).

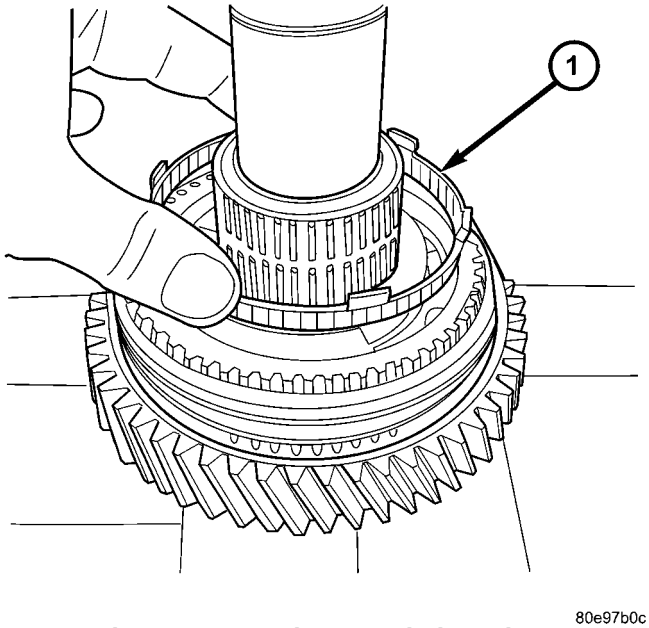

Fig. 219 Second Gear Friction Ring

1 - FRICTION RING

(14) Install second gear friction cone. All parts should be flush as shown in (Fig. 220).

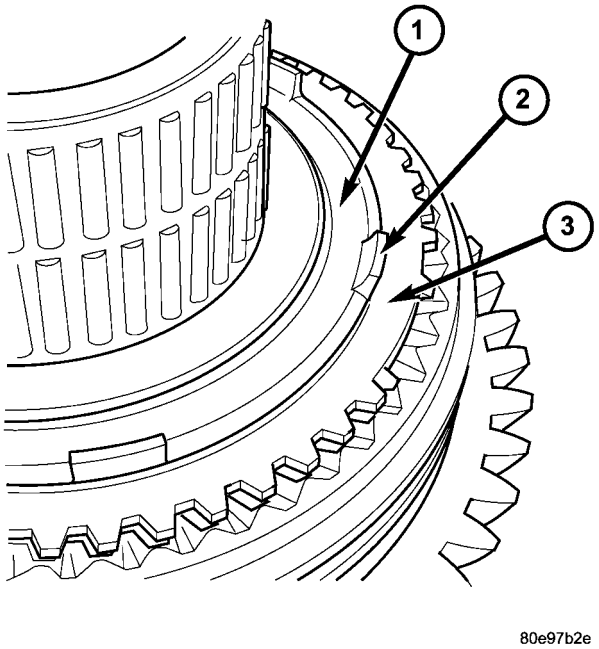

Fig. 220 Proper Installation of Synchronizer Components

1 - FRICTION CONE
2 - FRICTION RING
3 - BLOCKER RING

(15) Install second gear. Engage friction ring teeth with notches in gear. Components are properly installed when flush as shown in (Fig. 221)

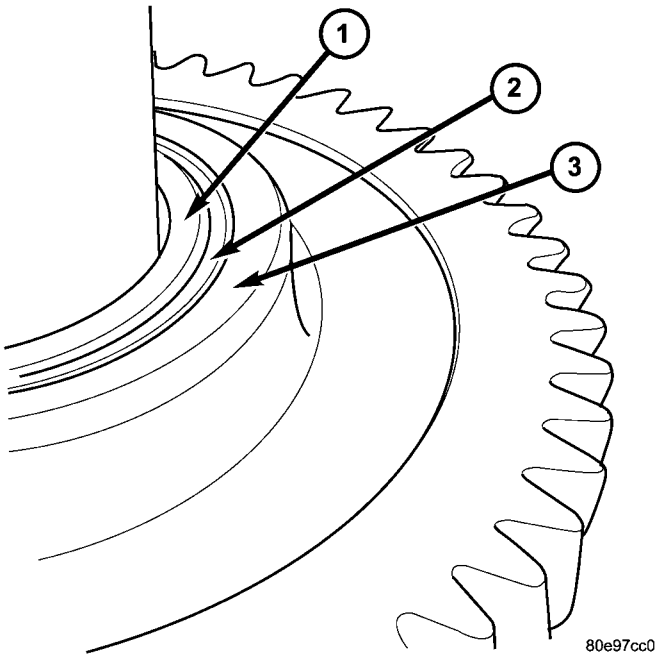

Fig. 221 Proper Second Gear Installation

1 - BUSHING
2 - BEARING
3 - SECOND GEAR

(16) Using Tool 6448A, press third gear until it bottoms (Fig. 222).

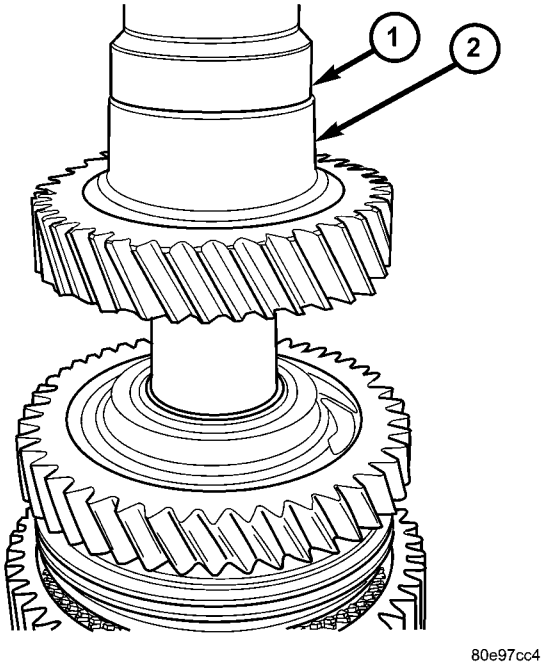

Fig. 222 Third Gear Installation

1 - TOOL 6448A
2 - THIRD GEAR

OUTPUT SHAFT (Continued)

(17) Using Tool 6448A, press fourth gear (collar down) until it bottoms (Fig. 223).

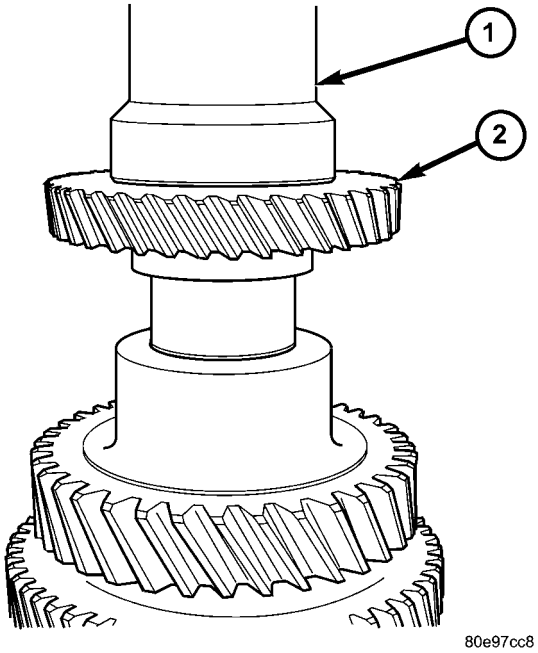

Fig. 223 Fourth Gear Installation

1 - TOOL 6448A
2 - FOURTH GEAR (COLLAR DOWN)

(18) Using Tool 6448A, press fifth gear (collar up) until it bottoms (Fig. 224).

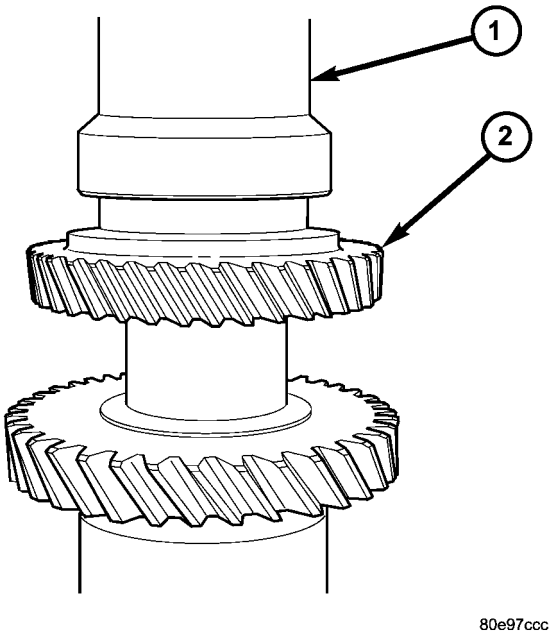

Fig. 224 Fifth Gear Installation

1 - TOOL 6448A
2 - FIFTH GEAR (COLLAR UP)

REVERSE SHAFT

DESCRIPTION

The reverse shaft assembly (Fig. 225) consists of a fixed gear shaft, the reverse synchronizer, and a free gear wheel that rotates about two (2) needle bearings. The assembly is supported on one end (clutch bellhousing) by a sealed roller bearing, and a needle bearing at the other end (geartrain housing).

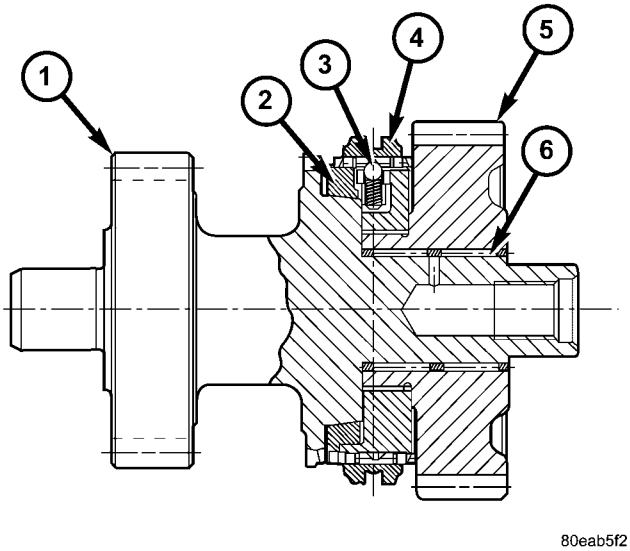

Fig. 225 Reverse Shaft Section View

1 - SHAFT W/GEAR
2 - BLOCKER RING
3 - STRUT ASSEMBLY
4 - SLEEVE
5 - GEAR (REVERSE)
6 - NEEDLE BEARING (2)

REVERSE SHAFT (Continued)

DISASSEMBLY

(1) Remove roller bearing retaining screw (Fig. 226). Use glove or install shaft assembly to soft-jawwed vice.

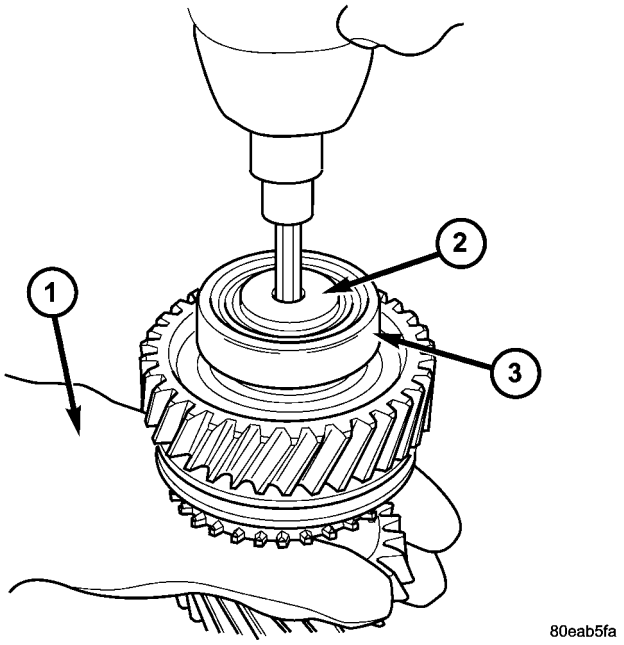

Fig. 226 Remove Bearing Retaining Screw

1 - GLOVE
2 - SCREW
3 - BEARING

(2) Set reverse shaft assembly on arbor press bed supported by bearing splitter P-334. Using Tool 8923, remove reverse gear, thrust washer, and bearing from reverse shaft assembly (Fig. 227) (Fig. 228).

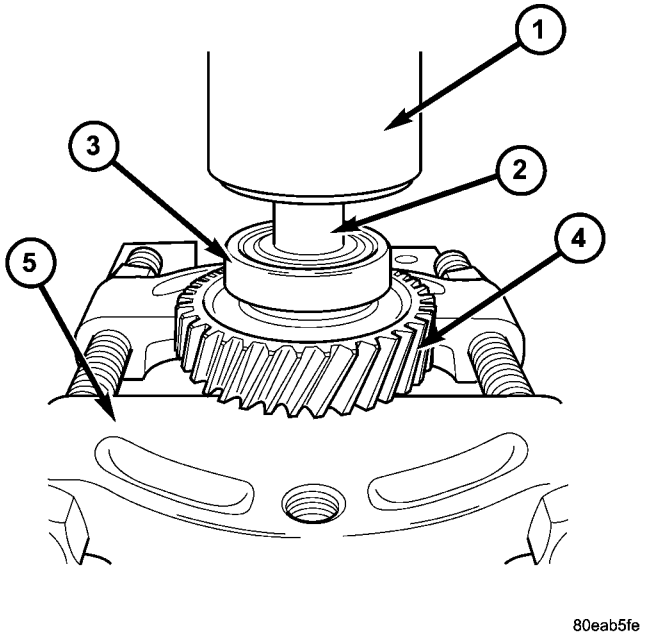

Fig. 227 Remove Bearing and Reverse Gear

1 - PRESS RAM
2 - TOOL 8923
3 - BEARING
4 - GEAR/SYNCHRO
5 - BEARING SPLITTER

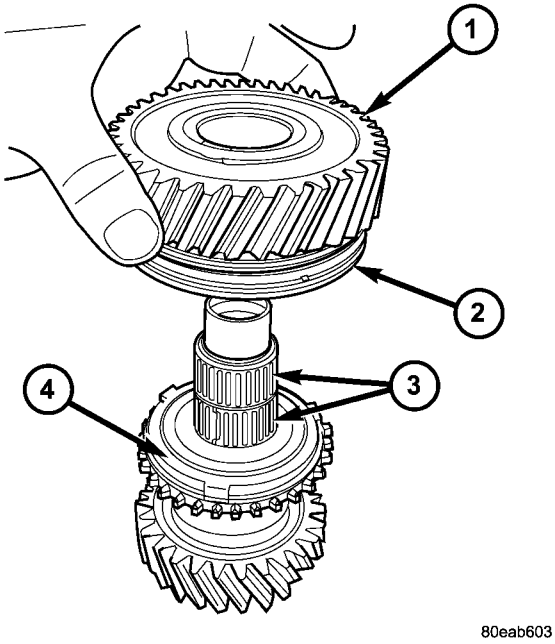

Fig. 228 Reverse Gear and Synchronizer

1 - REVERSE GEAR
2 - SYNCHRONIZER
3 - NEEDLE BEARINGS
4 - BLOCKER RING

REVERSE SHAFT (Continued)

(3) Remove synchronizer sleeve and strut assemblies from gear/synchronizer hub assembly (Fig. 229).

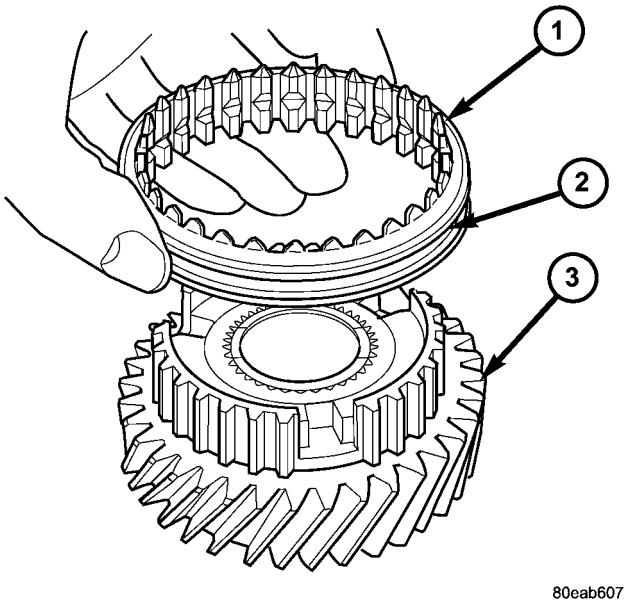

Fig. 229 Reverse Synchronizer Sleeve

1 - SYNCHRO SLEEVE
2 - GROOVE UP
3 - GEAR/SYNCHRO HUB

(4) Remove blocker ring from reverse shaft assembly (Fig. 230).

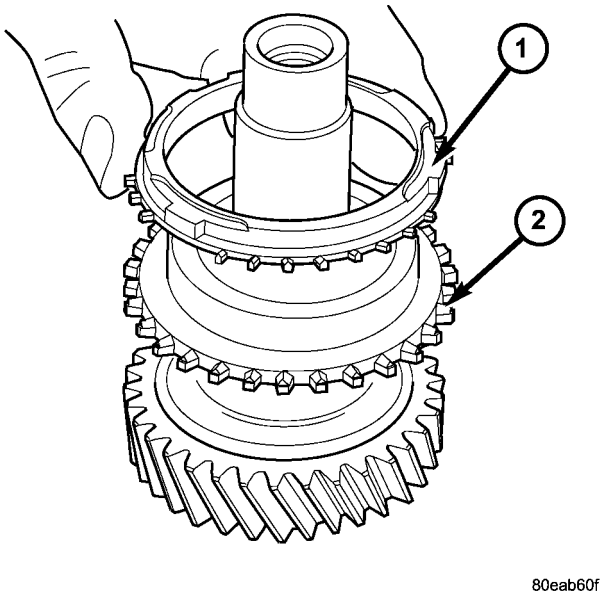

Fig. 230 Reverse Blocker Ring

1 - BLOCKER RING
2 - SHAFT ASSY.

(5) Remove needle bearings from reverse shaft (Fig. 231).

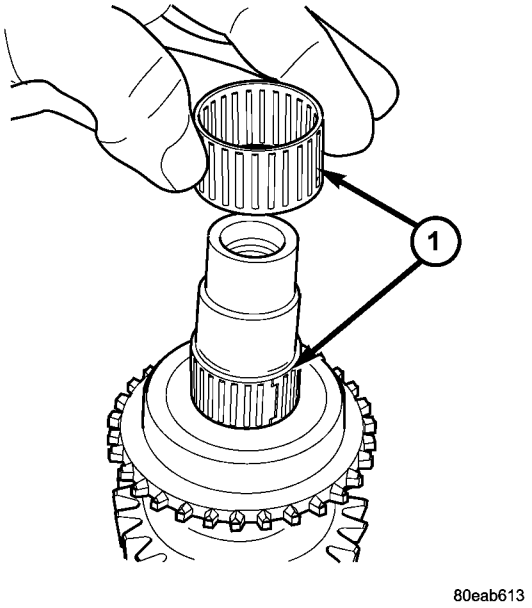

Fig. 231 Reverse Gear Needle Bearings

1 - NEEDLE BEARING (2)

ASSEMBLY

(1) Install synchronizer sleeve to gear/hub assembly with GROOVE UP as shown in (Fig. 232).

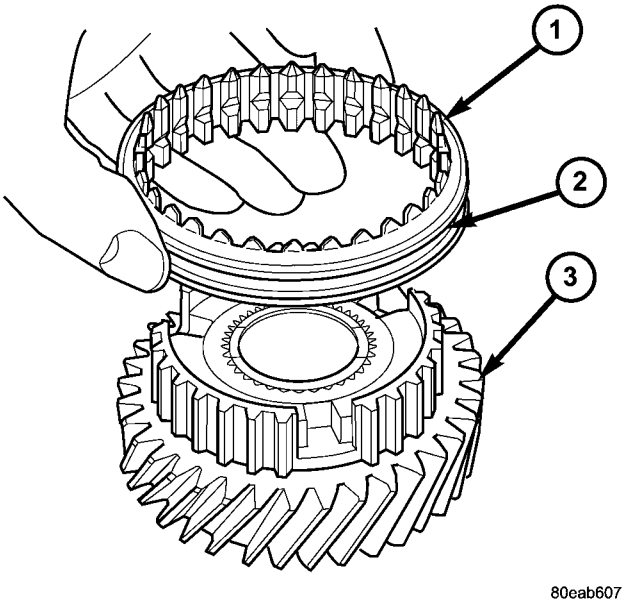

Fig. 232 Reverse Synchronizer Sleeve

1 - SYNCHRO SLEEVE
2 - GROOVE UP
3 - GEAR/SYNCHRO HUB

REVERSE SHAFT (Continued)

(2) Install three (3) synchronizer strut assemblies (Fig. 233).

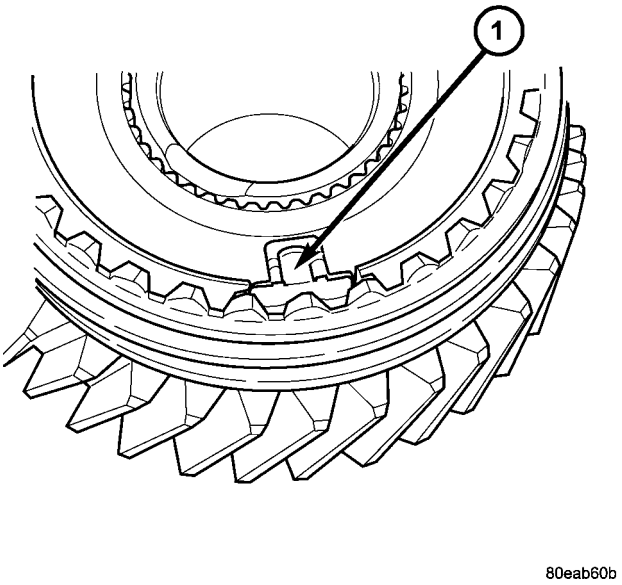

Fig. 233 Synchronizer Strut Assembly

1 - STRUT (3)

(3) Install needle bearings to reverse shaft (Fig. 234).

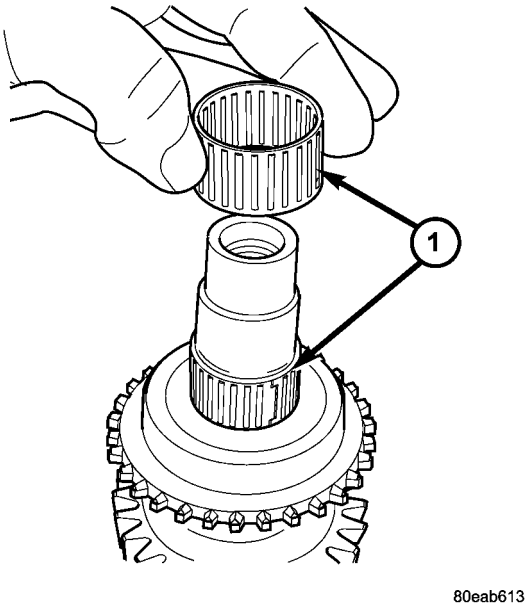

Fig. 234 Reverse Gear Needle Bearings

1 - NEEDLE BEARING (2)

(4) Install reverse blocker ring to shaft assembly (Fig. 235).

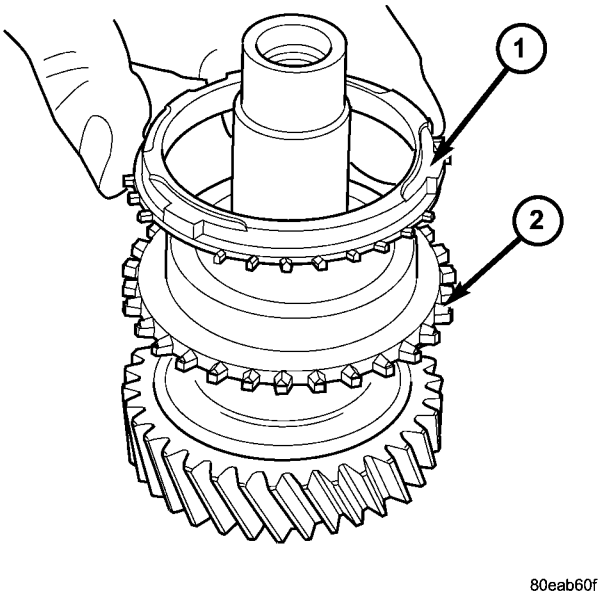

Fig. 235 Reverse Blocker Ring

1 - BLOCKER RING
2 - SHAFT ASSY.

(5) Install gear/synchronizer assembly to shaft (Fig. 236). Verify that blocker ring is seated into synchronizer hub for proper assembly.

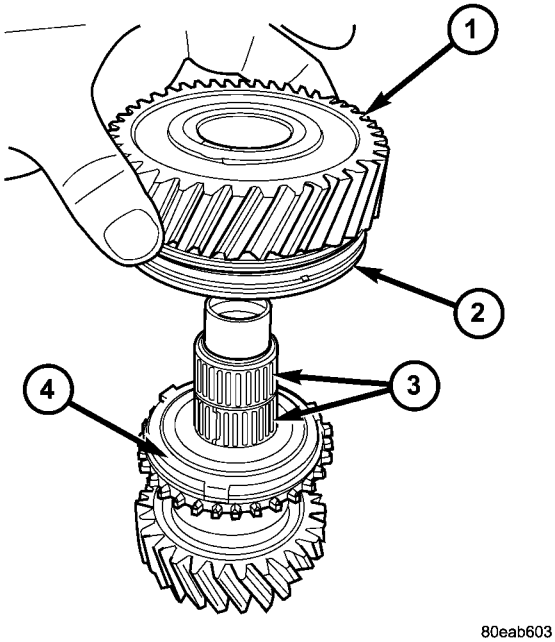

Fig. 236 Reverse Gear and Synchronizer

1 - REVERSE GEAR
2 - SYNCHRONIZER
3 - NEEDLE BEARINGS
4 - BLOCKER RING

REVERSE SHAFT (Continued)

(6) Install thrust washer (Fig. 237).

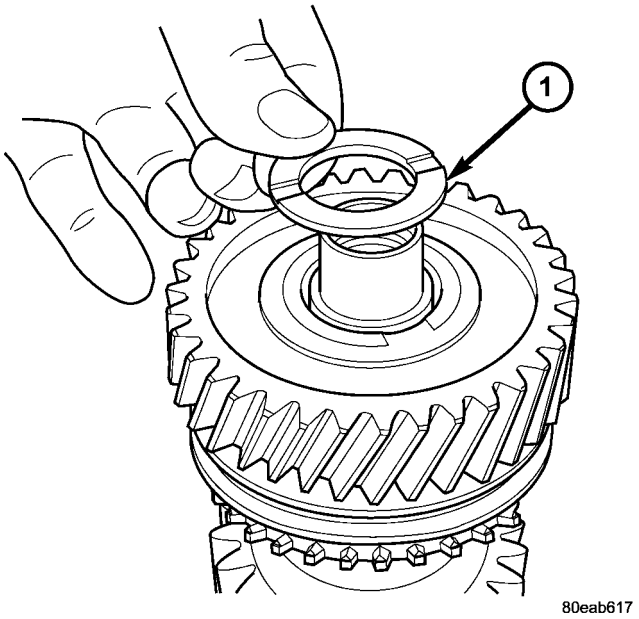

Fig. 237 Thrust Washer

1 - THRUST WASHER

(7) Install bearing. Press into place using Tool 6448A (Fig. 238).

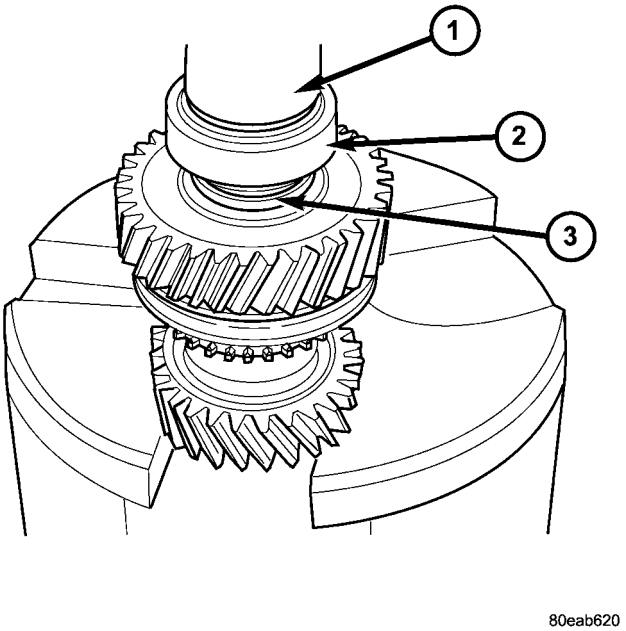

Fig. 238 Installing Roller Bearing

1 - TOOL 6448A
2 - BEARING
3 - THRUST WASHER

(8) Install **NEW** bearing retaining screw (Fig. 239).

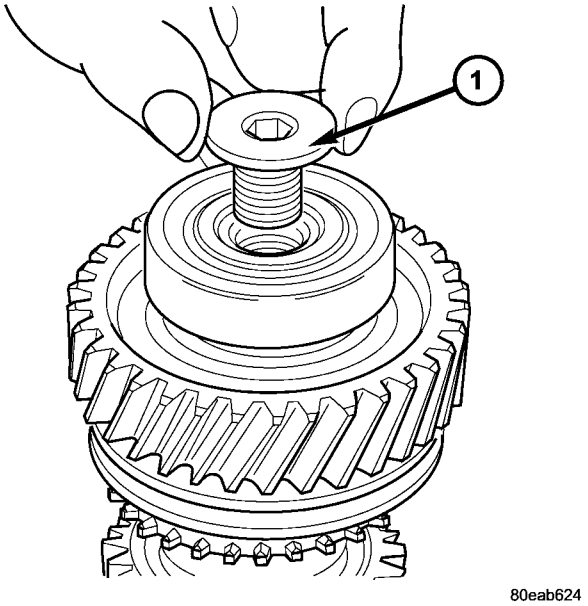

Fig. 239 Install Bearing Retaining Screw

1 - SCREW

(9) Torque bearing retaining screw to 95 N·m (70 ft. lbs.) (Fig. 240).

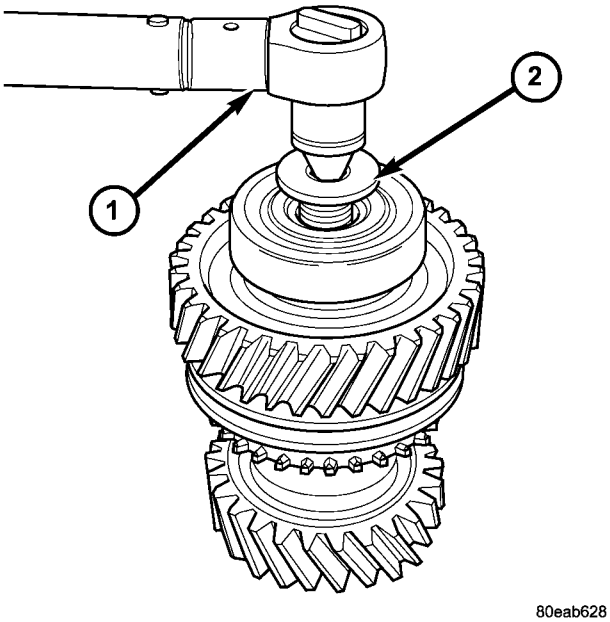

Fig. 240 Torque Retaining Screw

1 - TORQUE WRENCH
2 - SCREW

SYNCHRONIZER

DESCRIPTION

The 288 transaxle is fully synchronized, using synchronizers in all gear positions. The 1/2 synchronizer is a dual-cone synchronizer, and is located on the intermediate shaft assembly (Fig. 241). The 3/4 and 5th gear synchronizers are located on the input shaft assembly and are of conventional design, using only one friction element for each gear position (Fig. 242). The reverse synchronizer is located on the reverse shaft (Fig. 243).

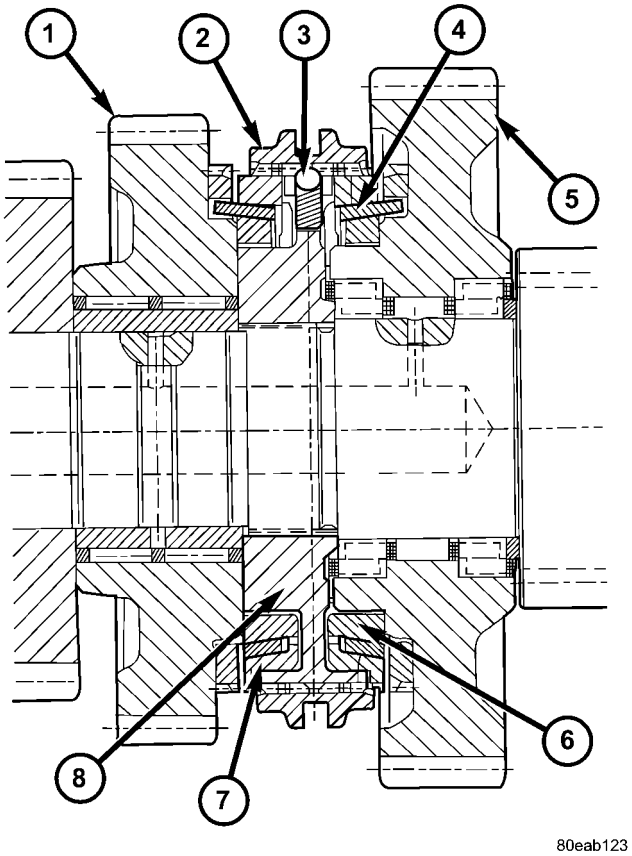

Fig. 241 1/2 Synchronizer Assembly

1 - 2ND GEAR
2 - SLEEVE
3 - STRUT ASSEMBLY
4 - FRICTION RING
5 - 1ST GEAR
6 - HUB
7 - BLOCKER RING (2)
8 - FRICTION CONE

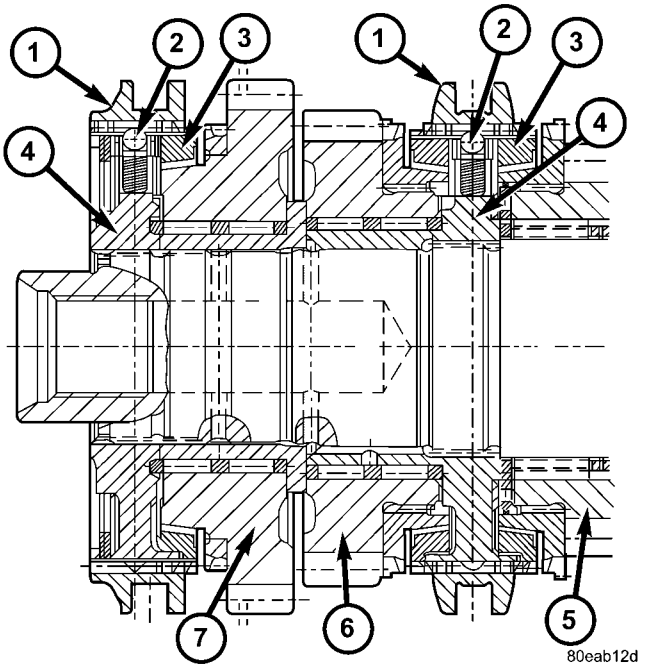

Fig. 242 3/4 and 5th Gear Synchronizers

1 - SLEEVE
2 - STRUT ASSEMBLY
3 - BLOCKER RING
4 - HUB
5 - 3RD GEAR
6 - 4TH GEAR
7 - 5TH GEAR

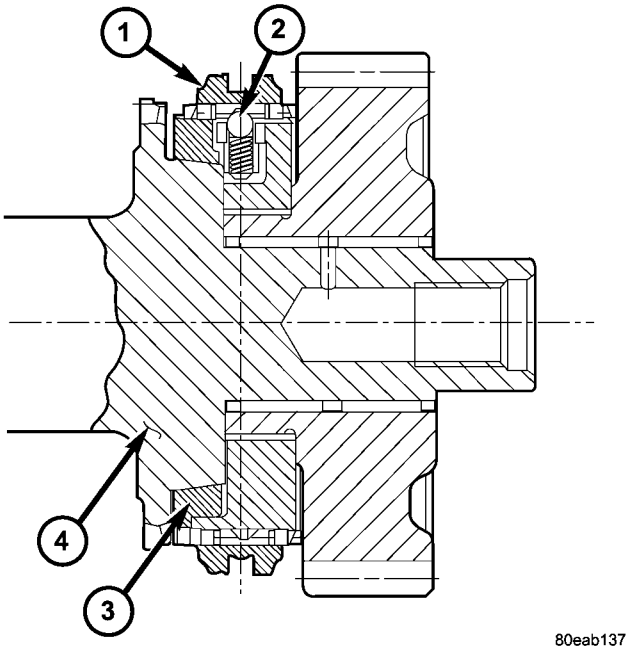

Fig. 243 Reverse Synchronizer

1 - SLEEVE
2 - STRUT ASSEMBLY
3 - BLOCKER RING
4 - REVERSE GEAR SHAFT

SYNCHRONIZER (Continued)

REMOVAL

To remove the 1/2 synchronizer assembly, the intermediate shaft must be disassembled. (Refer to 21 - TRANSMISSION/TRANSAXLE/MANUAL/INTERMEDIATE SHAFT - DISASSEMBLY)

To remove the 3/4 or 5th gear synchronizer assembly, the input shaft must be disassembled. (Refer to 21 - TRANSMISSION/TRANSAXLE/MANUAL/INPUT SHAFT - DISASSEMBLY)

To remove the reverse gear synchronizer assembly, the reverse shaft must be disassembled. (Refer to 21 - TRANSMISSION/TRANSAXLE/MANUAL/REVERSE SHAFT - DISASSEMBLY)

DISASSEMBLY

(1) Remove synchronizer sleeve (Fig. 244). Three (3) synchronizer strut assemblies will free from hub.

(2) Inspect all components for wear and replace as necessary.

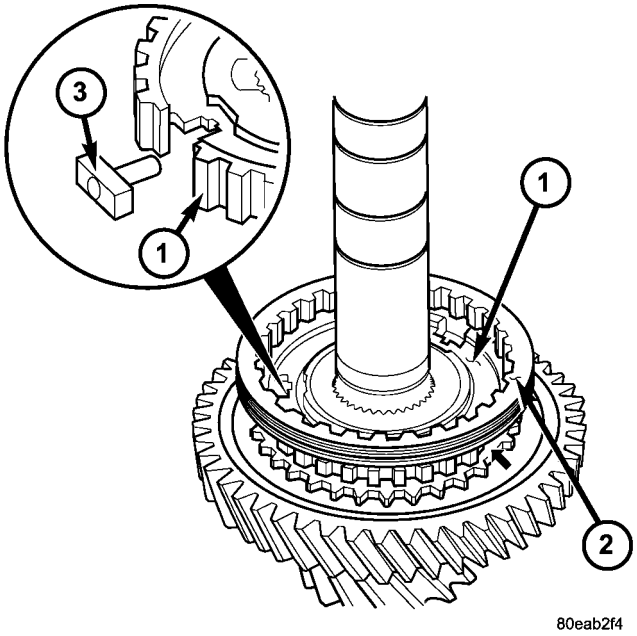

Fig. 244 Synchronizer Disassembly

1 - SYNCHRONIZER HUB
2 - SYNCHRONIZER SLEEVE
3 - STRUT ASSEMBLY

INSPECTION

(1) Install blocker ring to gear as shown in (Fig. 245). Using feeler gauge, measure wear limit (between blocker ring and gear). (Refer to 21 - TRANSMISSION/TRANSAXLE/MANUAL - SPECIFICATIONS)

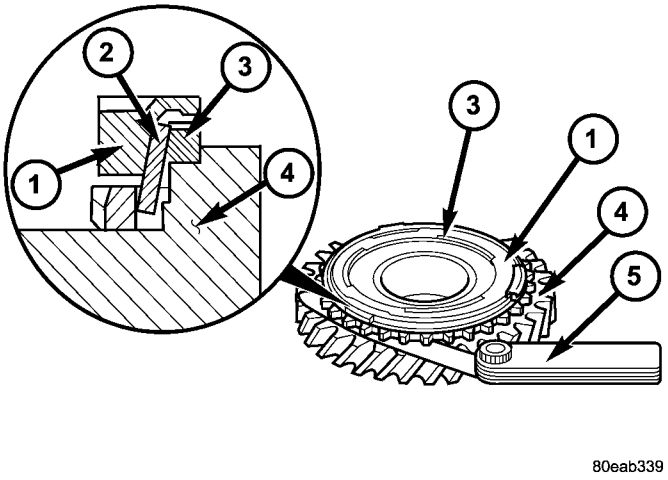

Fig. 245 Measuring Synchronizer Wear

1 - BLOCKER RING
2 - FRICTION RING
3 - FRICTION CONE
4 - GEAR
5 - FEELER GAUGE

VISUAL INSPECTION

- Inspect for scuffed, nicked, burred, broken teeth, or general wear
- Inspect strut assemblies for wear, distortion, and functionality of ball and spring

ASSEMBLY

(1) Install synchronizer sleeve to synchronizer hub (Fig. 244). Install three (3) strut assemblies.

INSTALLATION

To install 1/2 synchronizer assembly, (Refer to 21 - TRANSMISSION/TRANSAXLE/MANUAL/INTERMEDIATE SHAFT - ASSEMBLY)

To install 3/4 or 5th gear synchronizer assembly, (Refer to 21 - TRANSMISSION/TRANSAXLE/MANUAL/INPUT SHAFT - ASSEMBLY)

To install reverse gear synchronizer assembly, (Refer to 21 - TRANSMISSION/TRANSAXLE/MANUAL/REVERSE SHAFT - ASSEMBLY)

TRANSAXLE HOUSING

DISASSEMBLY

(1) Remove reverse shaft needle bearing using Tools 8915 and 8911 (Fig. 246).

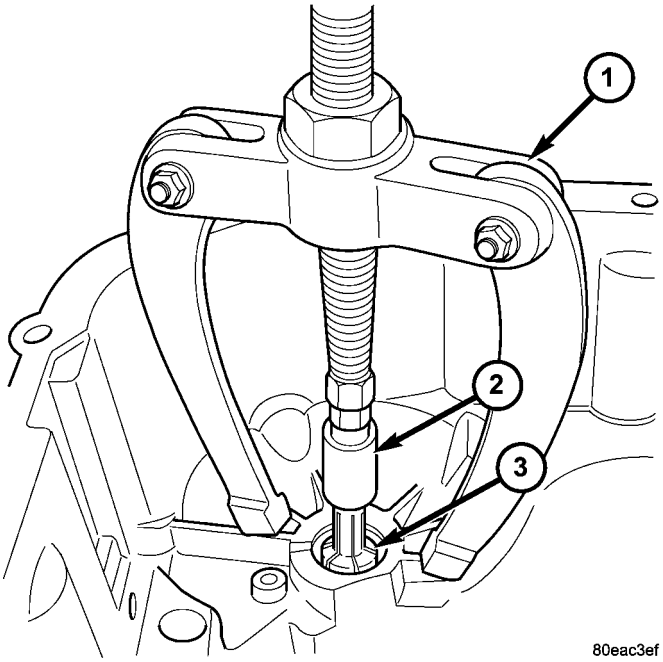

Fig. 246 Reverse Shaft Needle Bearing Removal

1 - TOOL 8915
2 - TOOL 8911
3 - BEARING

(2) Remove differential bearing cone using Tools 8915 and 8913 (Fig. 247).

(3) Drive out input and intermediate shaft sealed roller bearings using Tools C-4171 and 6954 (Fig. 248) (Fig. 249).

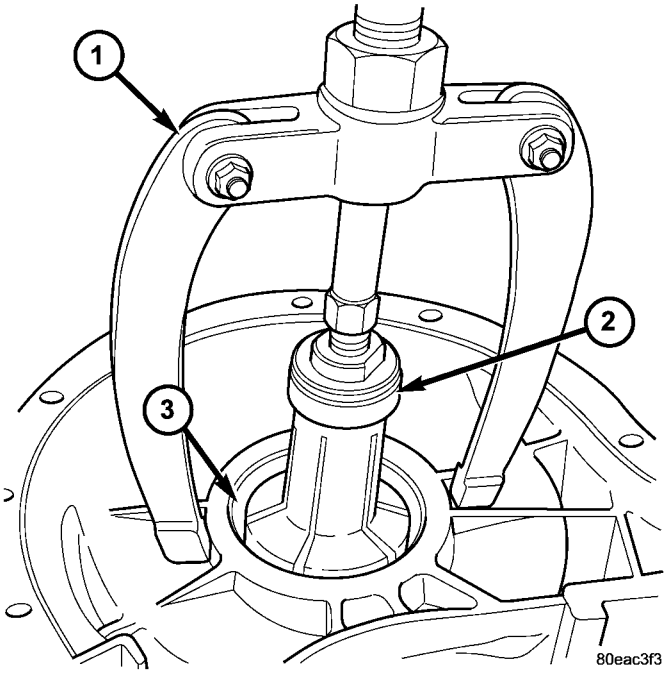

Fig. 247 Differential Bearing Race Removal

1 - TOOL 8915
2 - TOOL 8913
3 - BEARING RACE

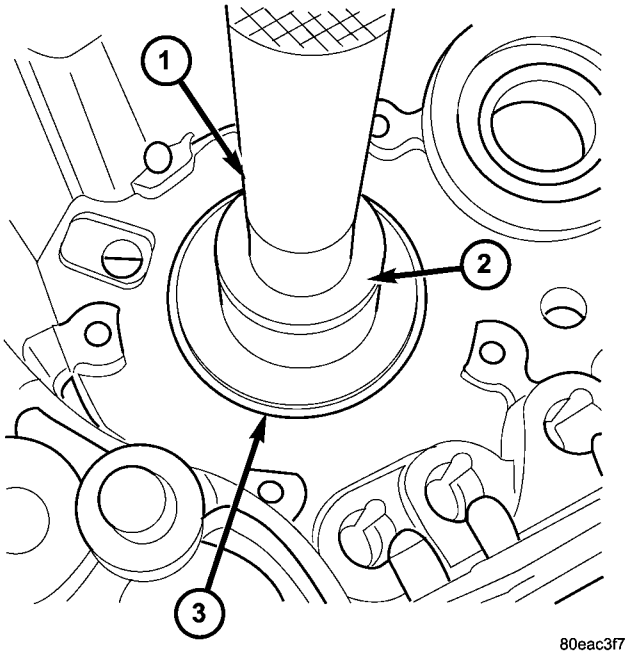

Fig. 248 Input Shaft Bearing Removal

1 - TOOL C-4171
2 - TOOL 6954
3 - INPUT SHAFT BEARING

TRANSAXLE HOUSING (Continued)

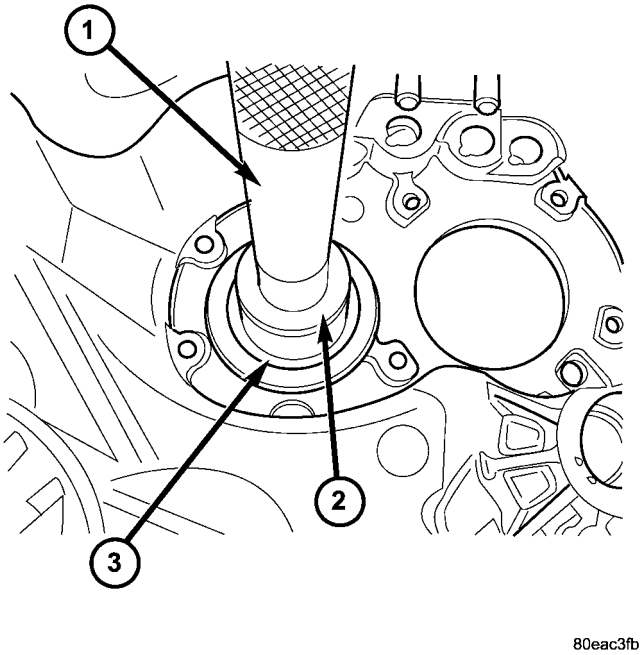

Fig. 249 Intermediate Shaft Bearing Removal

1 - TOOL C-4171
2 - TOOL 6954
3 - INTERMEDIATE BEARING

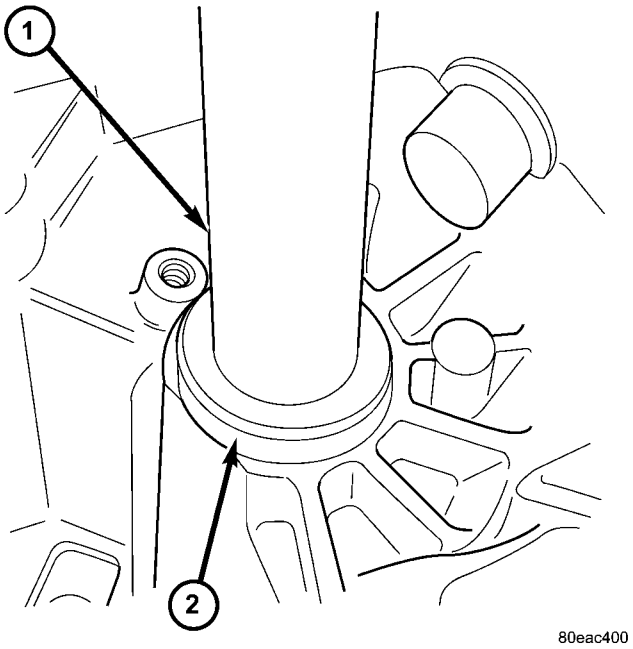

Fig. 250 Reverse Shaft Needle Bearing Installation

1 - TOOL C-4171
2 - TOOL 8924

ASSEMBLY

NOTE: Input and intermediate shaft sealed roller bearings do not get installed until transaxle assembly.

(1) Using Tools C-4171 and 8924, install reverse shaft needle bearing (Fig. 250). Drive until tool bottoms on case.

(2) Using Tools C-4171 and 8866, install differential bearing race (Fig. 251). Drive until race bottoms in case.

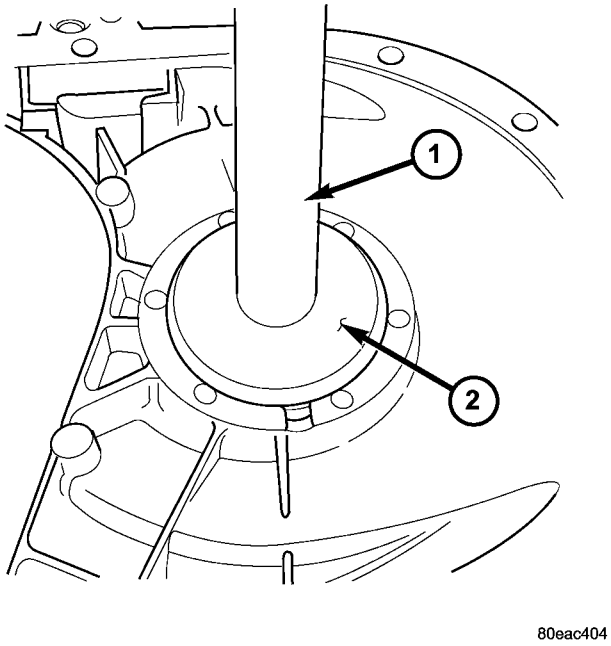

Fig. 251 Differential Bearing Race Installation

1 - TOOL C-4171
2 - TOOL 8866

T350 MANUAL TRANSAXLE

TABLE OF CONTENTS

page

T350 MANUAL TRANSAXLE
DESCRIPTION 95
DIAGNOSIS AND TESTING - COMMON PROBLEM CAUSES 96
REMOVAL 97
DISASSEMBLY 101
CLEANING 108
INSPECTION 108
ASSEMBLY 108
INSTALLATION 114
SPECIFICATIONS 115
SPECIAL TOOLS 116
AXLE SEAL
REMOVAL 118
INSTALLATION 118
BACK-UP LAMP SWITCH
REMOVAL 118
INSTALLATION 118
DIFFERENTIAL
DISASSEMBLY 119
ASSEMBLY 121
ADJUSTMENTS
DIFFERENTIAL BEARING PRELOAD ADJUSTMENT / SHIM SELECTION 124
DIFFERENTIAL BEARING CUPS
REMOVAL 125
INSTALLATION 126
FLUID
STANDARD PROCEDURE - FLUID DRAIN AND FILL 126
GEAR SHIFT BOOT
REMOVAL 126
INSTALLATION 127
GEAR SHIFT CABLE
REMOVAL 127
INSTALLATION 130
ADJUSTMENTS
ADJUSTMENT - GEARSHIFT CROSSOVER CABLE 133
GEAR SHIFT KNOB
REMOVAL 134
INSTALLATION 134
GEAR SHIFT MECHANISM
REMOVAL 134
INSTALLATION 134
INPUT BEARING AND SLEEVE
REMOVAL 136
INSTALLATION 136
INPUT SHAFT
DISASSEMBLY 137
ASSEMBLY 140
OUTPUT SHAFT
DISASSEMBLY 142
OUTPUT BEARING AND RACE
REMOVAL 143
INSTALLATION 144
REAR BEARING OIL FEED TROUGH
REMOVAL 144
INSTALLATION 144
SHIFT CROSSOVER LEVER
REMOVAL 144
INSTALLATION 145
SHIFT CROSSOVER SHAFT
REMOVAL 145
INSTALLATION 145
SHIFT CROSSOVER SHAFT BUSHING
REMOVAL 145
INSTALLATION 145
SHIFT RAIL AND FORK
DISASSEMBLY 146
SHIFT RAIL BUSHINGS
REMOVAL 146
INSTALLATION 146
SHIFT SELECTOR SHAFT
REMOVAL 146
INSTALLATION 146
SHIFT SELECTOR SHAFT BUSHING
REMOVAL 146
INSTALLATION 147
SHIFT SHAFT SEALS
REMOVAL 147
INSTALLATION 147
SYNCHRONIZER
DISASSEMBLY 147
CLEANING
CLEAN 147
INSPECTION
INSPECT 147
ASSEMBLY 147
VEHICLE SPEED SENSOR
DESCRIPTION
VEHICLE SPEED SENSOR 149
REMOVAL 149
INSTALLATION 149

T350 MANUAL TRANSAXLE

DESCRIPTION

This five speed is a constant-mesh manual transaxle. All gear ranges, except reverse, are synchronized. The reverse gear utilizes a reverse brake for shifting ease. The reverse idler gear is supported on a sliding spindle idler shaft. The transaxle case is aluminum with a steel end–plate bearing cover. It is housed in a die-cast aluminum case featuring a two–piece, middle split design (Fig. 1).

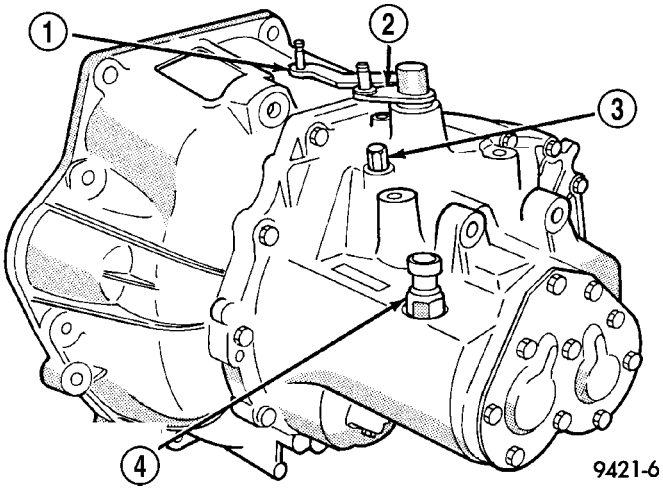

Fig. 1 T350 Manual Transaxle

1 - SHIFT LEVER
2 - CROSSOVER LEVER
3 - VENT
4 - REVERSE LAMP SWITCH

The T350 transaxle internal components can be serviced only by separating the gear case from the bellhousing case.

CAUTION: The transaxle output shaft is serviced as a unit. No disassembly and reassembly is possible. Damage to the transaxle may result.

TRANSAXLE IDENTIFICATION

The transaxle model, assembly number, and build date are on a metal I.D. tag that is attached to the end cover of the transaxle (Fig. 2). This information is also shown on a bar code label that is attached to the front of the transaxle (Fig. 3).

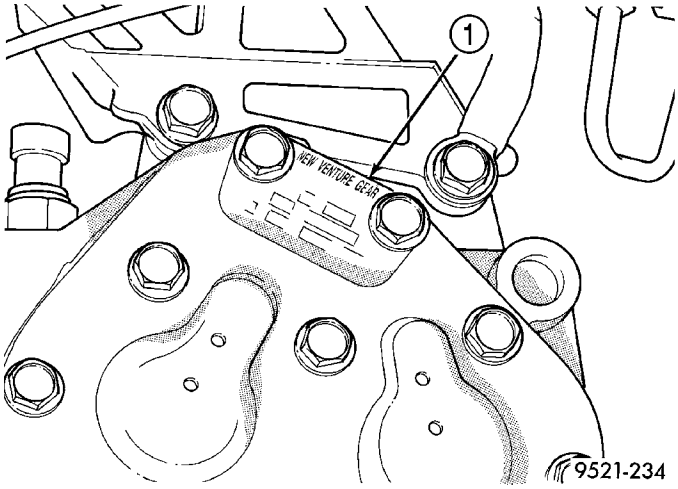

Fig. 2 Metal I.D. Tag

1 - METAL I.D. TAG

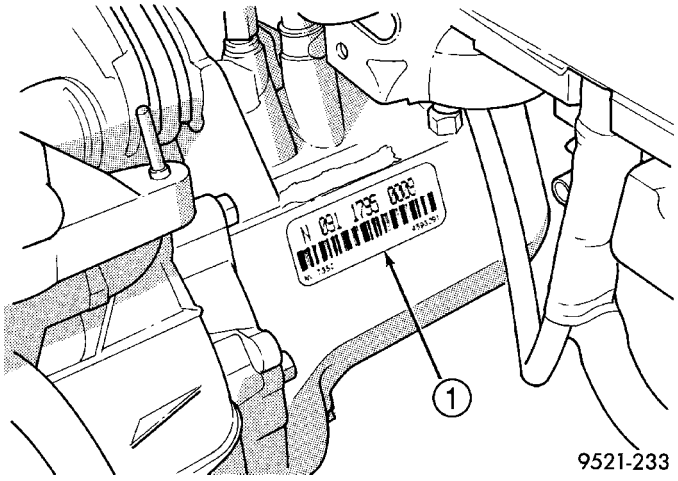

Fig. 3 Bar Code Label

1 - BAR CODE LABEL

NOTE: Transaxles use various final drive gear ratios in different vehicle applications. Therefore, it is necessary that the correct transaxle assembly number is used when ordering service parts.

T350 MANUAL TRANSAXLE (Continued)

GEAR RATIOS

CAUTION: All gears and shafts must not be interchanged with other transaxles; they will not function correctly.

The differential is a conventional arrangement of gears that is supported by tapered roller bearings. The final output gear turns the ring gear and differential assembly, thereby turning the drive axle shafts.

The gear ratios of each transaxle are shown in the following chart. The chart also shows which transaxles are available with the reverse–input shaft brake. This brake allows easier shifting into reverse and helps eliminate reverse gear clash.

GEAR	1.6L	2.0L	2.4L
1st	3.50	3.50	3.50
2nd	1.95	1.95	1.95
3rd	1.36	1.36	1.36
4th	0.97	0.97	0.97
5th	0.81	0.81	0.72
FINAL DRIVE RATIO	4.12	3.94	3.94
REVERSE BRAKE	YES	YES	YES
CLUTCH RELEASE SYSTEM	HYDRAULIC	HYDRAULIC	HYDRAULIC

GEARSHIFT PATTERN

The T350 transaxle shift pattern is a modified H–pattern (Fig. 4). Overdrive fifth and reverse gears are in–line and outboard of the first through fourth gear positions.

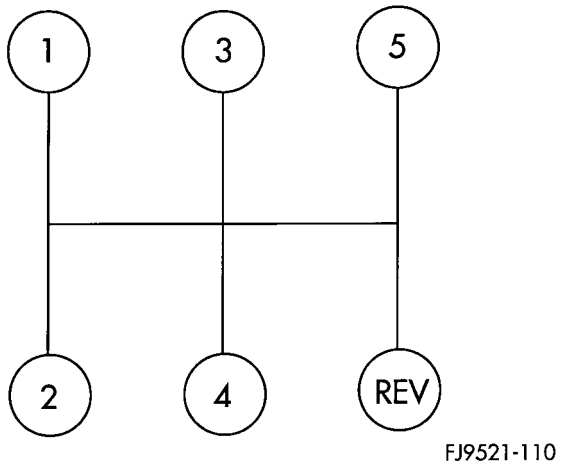

Fig. 4 T350 Transaxle Shift Pattern

LUBRICANT/ADDITIVES

NOTE: All T350 Manual Transaxles require the use of ATF+4 (Automatic Transmission Fluid).

Hypoid gear lube or engine oil should not be used in this transaxle. Hard shifting effort, bearing, gear, and/or synchronizer failure may occur if incorrect fluid is used.

The addition of any fluids to the transaxle, other than the fluid listed above, is not recommended. An exception to this policy is the use of special dyes to aid in detecting fluid leaks. The use of transmission sealers should be avoided, since they may adversely affect seals.

SEALANTS

The sealant used to seal the transaxle case halves and input bearing is Mopar® Gasket Maker, Loctite® 518, or equivalent. The sealant used for the bearing end plate cover is Mopar® RTV.

DIAGNOSIS AND TESTING - COMMON PROBLEM CAUSES

The majority of transaxle malfunctions are a result of:

- Insufficient lubrication
- Incorrect lubricant
- Misassembled or damaged internal components
- Improper operation

HARD SHIFTING

Hard shifting may be caused by a misadjusted crossover cable. If hard shifting is accompanied by gear clash, synchronizer clutch and stop rings or gear teeth may be worn or damaged.

Misassembled synchronizer components also cause shifting problems. Incorrectly installed synchronizer sleeves, struts, or springs can cause shift problems.

Worn, damaged, missassembled or leaking hydraulic system/components can also cause difficult shifting or gear clash.

NOISY OPERATION

Transaxle noise is most often a result of worn or damaged components. Chipped, broken gear or synchronizer teeth, and brinnelled, spalled bearings all cause noise.

Abnormal wear and damage to the internal components is frequently the end result of insufficient lubricant.

SLIPS OUT OF GEAR

Transaxle disengagement may be caused by misaligned or damaged shift components, or worn teeth on the drive gears or synchronizer components. Incorrect assembly also causes gear disengagement.

T350 MANUAL TRANSAXLE (Continued)

LOW LUBRICANT LEVEL

Insufficient transaxle lubricant is usually the result of leaks, or inaccurate fluid level check or refill method. Leakage is evident by the presence of oil around the leak point. If leakage is not evident, the condition is probably the result of an underfill.

If air–powered lubrication equipment is used to fill a transaxle, be sure the equipment is properly calibrated. Equipment out of calibration can lead to an underfill condition.

CLUTCH PROBLEMS

Worn, damaged, or misaligned clutch components can cause difficult shifting, gear clash, and noise.

A worn or damaged clutch disc, pressure plate, or release bearing can cause hard shifting and gear clash.

REMOVAL

(1) Raise hood.

(2) Remove air cleaner assembly (Fig. 5).

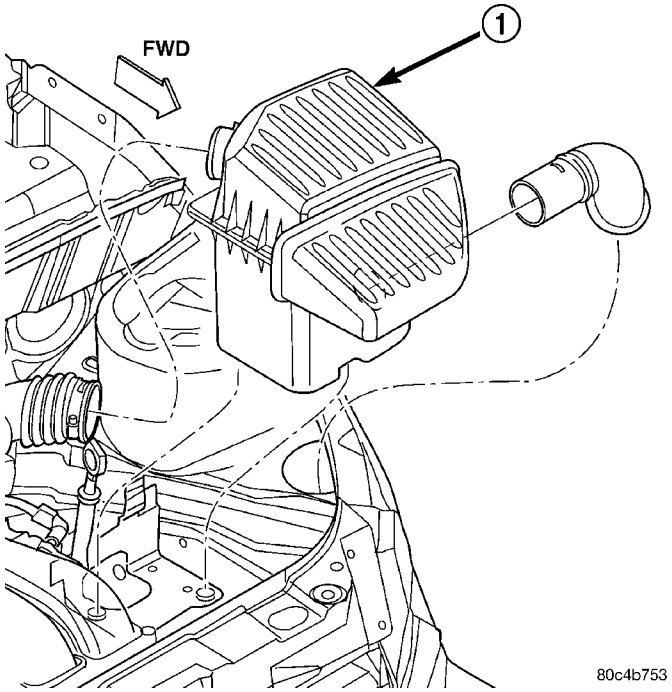

Fig. 5 Air Cleaner Assembly Removal/Installation

1 - AIR CLEANER ASSEMBLY

(3) Disconnect both battery cables.

(4) Remove battery hold down clamp and bolt, and remove battery (Fig. 6).

(5) Remove battery tray from bracket (Fig. 7).

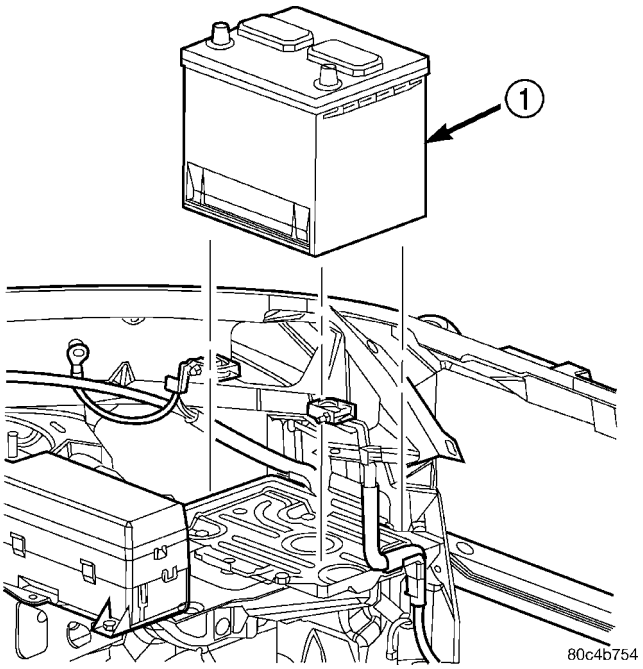

Fig. 6 Battery Removal/Installation

1 - BATTERY

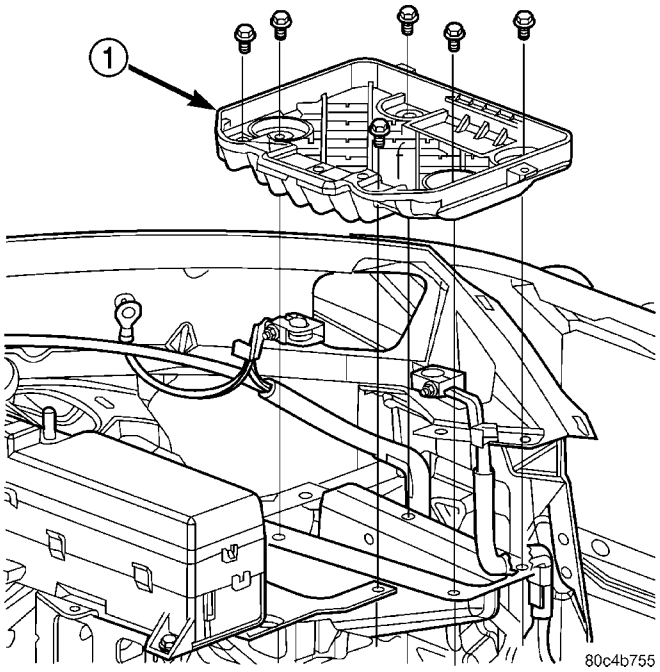

Fig. 7 Battery Tray Removal/Installation

1 - BATTERY TRAY

T350 MANUAL TRANSAXLE (Continued)

(6) Disconnect back-up lamp switch connector (Fig. 8).

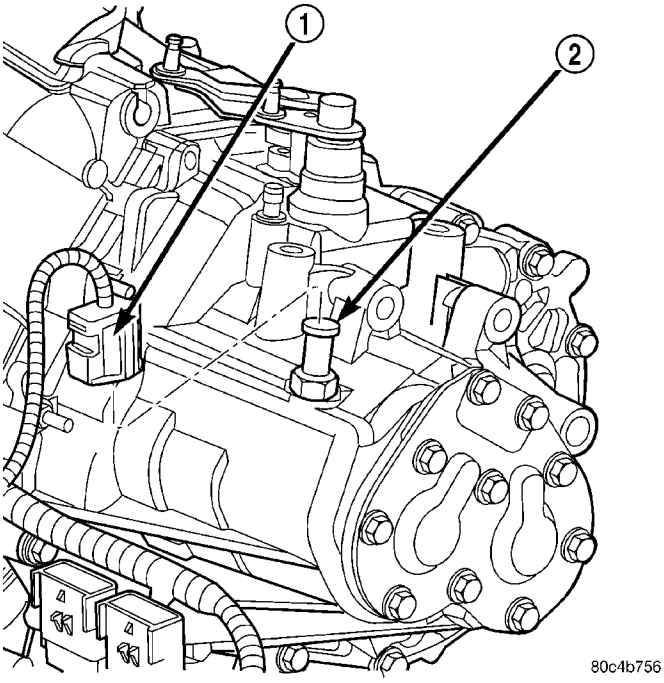

Fig. 8 Back-up Lamp Switch Connector

1 - CONNECTOR
2 - BACK UP LAMP SWITCH

(7) Remove shift cable-to-bracket clips (Fig. 9).

(8) Disconnect shift selector and crossover cable from levers (Fig. 9). Remove cables and secure out of the way.

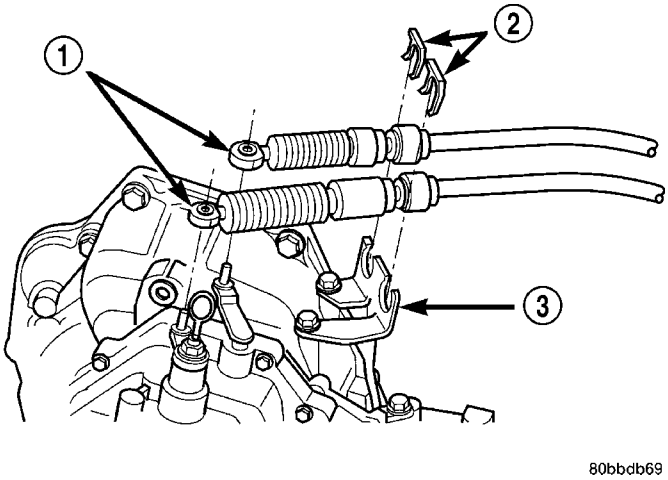

Fig. 9 Shift Cables at Transaxle

1 - SHIFT CABLES
2 - CLIPS
3 - BRACKET

(9) Disconnect the vehicle speed sensor connector (Fig. 10).

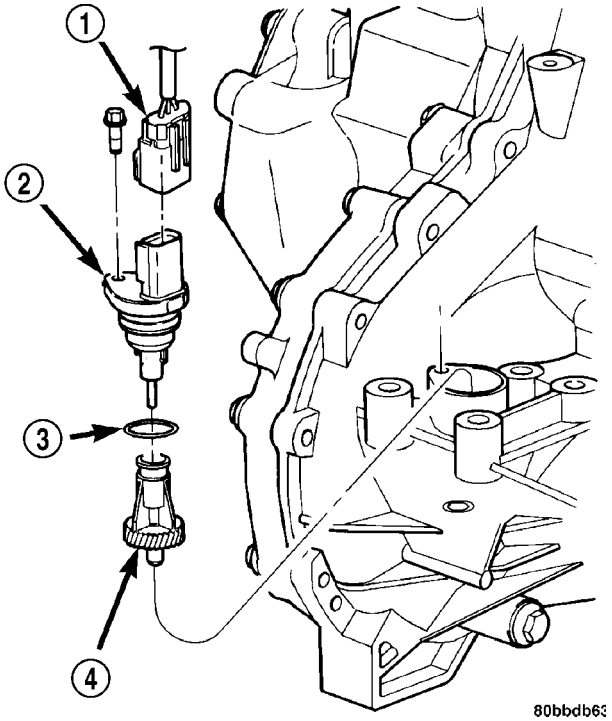

Fig. 10 Vehicle Speed Sensor Connector

1 - CONNECTOR
2 - SENSOR
3 - O-RING
4 - SPEEDO PINION

(10) Raise vehicle on hoist.

(11) Remove transaxle oil drain plug (Fig. 11) and drain oil into a suitable container. Reinstall drain plug and torque to 28 N·m (250 in. lbs.) torque.

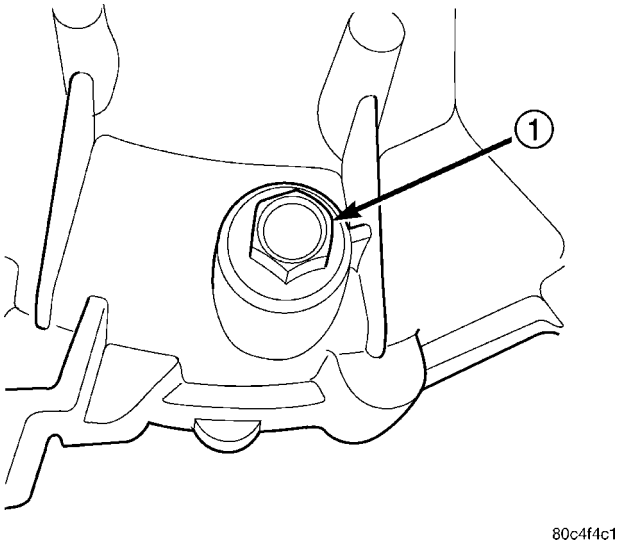

Fig. 11 Transaxle Drain Plug

1 - DRAIN PLUG

T350 MANUAL TRANSAXLE (Continued)

(12) Remove clutch slave cylinder from transaxle as shown in (Fig. 12) (Fig. 13)

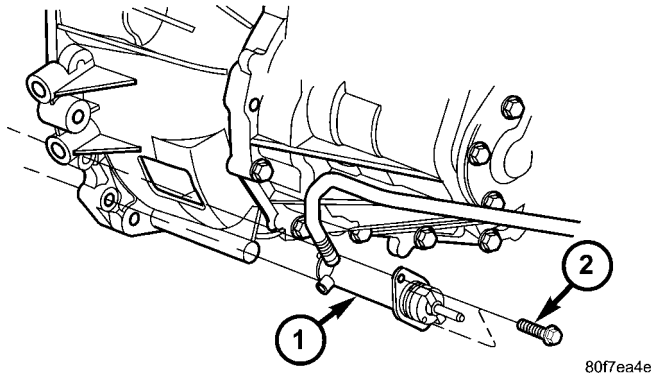

Fig. 12 Clutch Slave Cylinder at Transaxle—1.6L Models

1 - SLAVE CYLINDER
2 - BOLT

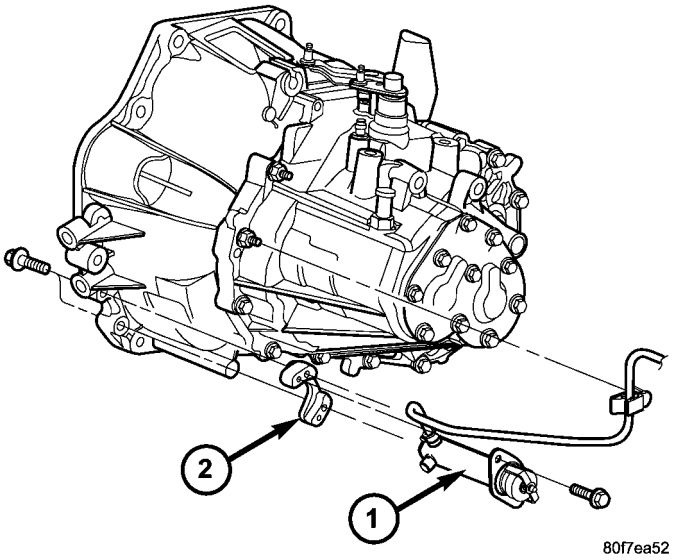

Fig. 13 Clutch Slave Cylinder at Transaxle—2.0/2.4L

1 - SLAVE CYLINDER
2 - BRACKET

(13) Remove both axle half shafts. (Refer to 3 - DIFFERENTIAL & DRIVELINE/HALF SHAFT - REMOVAL)

(14) Disconnect power steering hose from structural collar (Fig. 14)

(15) Remove the left engine-to-transaxle lateral bending brace and structural collar (Fig. 15).

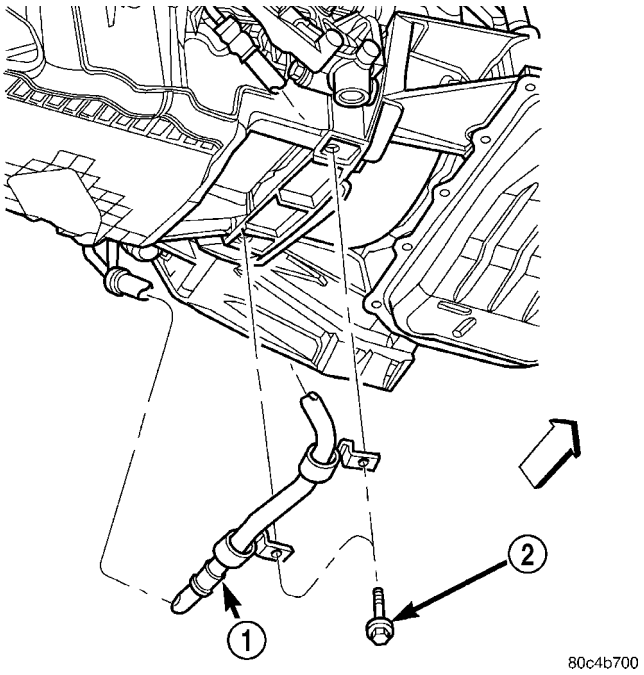

Fig. 14 Power Steering Hose to Structural Collar

1 - POWER STEERING HOSE
2 - BOLT

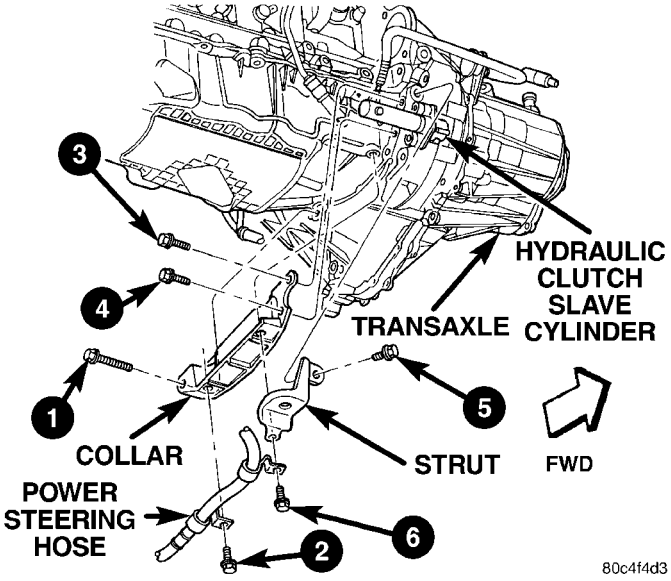

Fig. 15 Left Lateral Bending Brace and Structural Collar—Typical

T350 MANUAL TRANSAXLE (Continued)

(16) Remove bellhousing dust cover if equipped (Fig. 16).

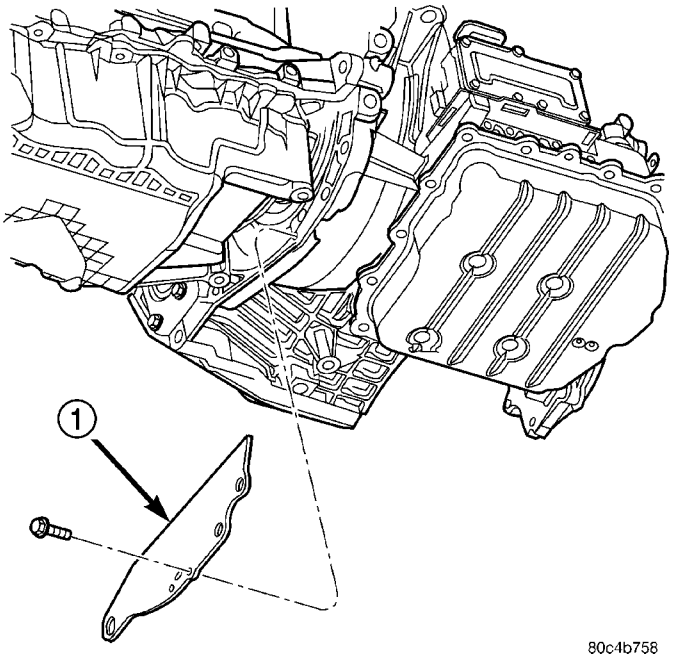

Fig. 16 Bellhousing Dust Cover Removal/Installation (2.0/2.4L Models)

1 - DUST COVER (IF EQUIPPED)

(17) Remove the right engine-to-transaxle lateral bending brace (Fig. 17).

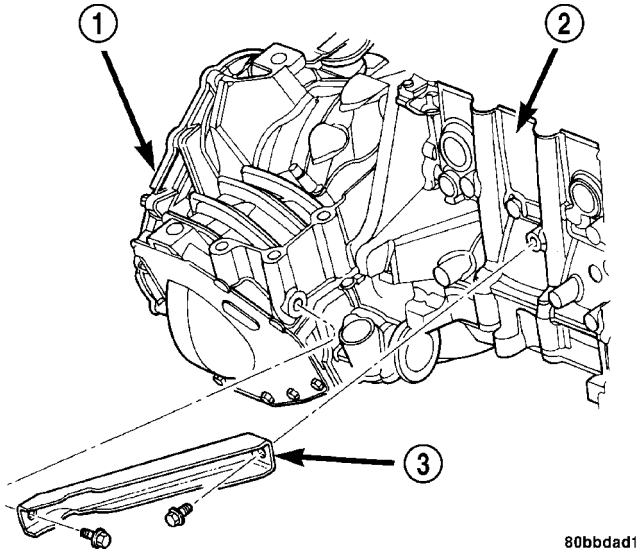

Fig. 17 Right Lateral Bending Brace Removal/ Installation—Typical

1 - TRANSAXLE
2 - ENGINE
3 - LATERAL BENDING BRACE

(18) Remove starter motor (Fig. 18).

(19) Remove four (4) modular clutch-to-drive plate bolts (Fig. 20). While removing bolts, one tight-tolerance (slotted) drive plate hole will be encountered. When this bolt is removed, mark driveplate and modular clutch assembly at this location, and be sure to align marks upon reassembly.

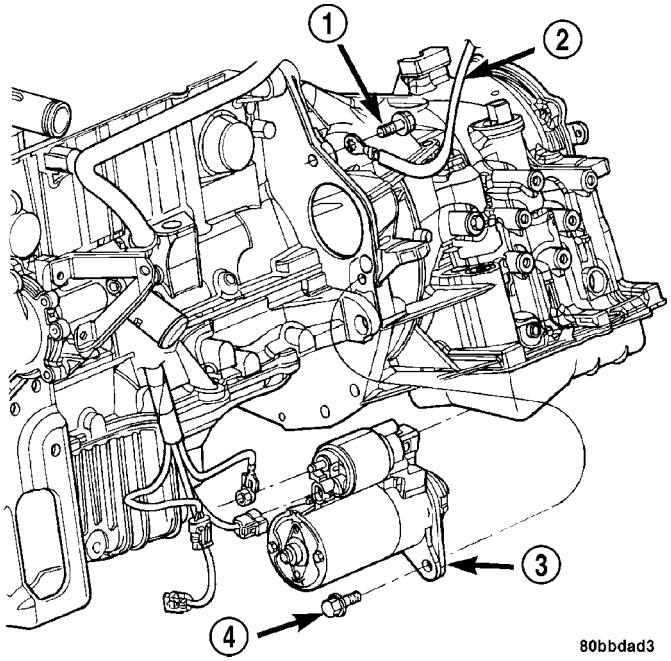

Fig. 18 Starter Motor Removal/Installation—Typical

1 - BOLT
2 - GROUND
3 - STARTER
4 - BOLT

(20) Support engine at oil pan with screw jack and wood block.

(21) Remove transaxle upper mount bolts (Fig. 19).

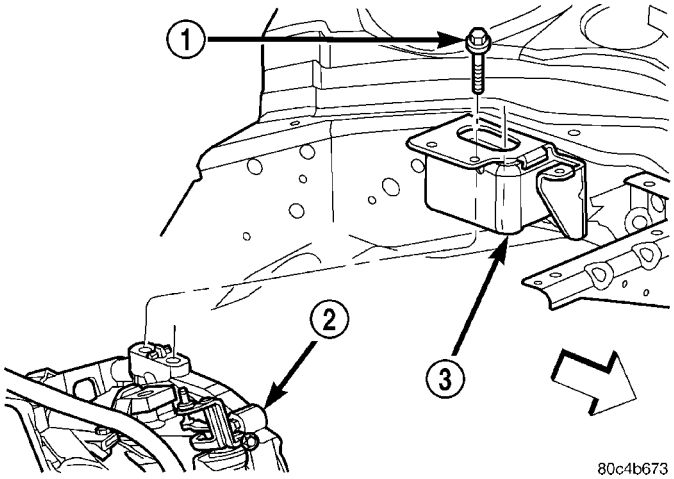

Fig. 19 Transaxle Upper Mount

1 - BOLT
2 - TRANSAXLE
3 - LEFT MOUNT

T350 MANUAL TRANSAXLE (Continued)

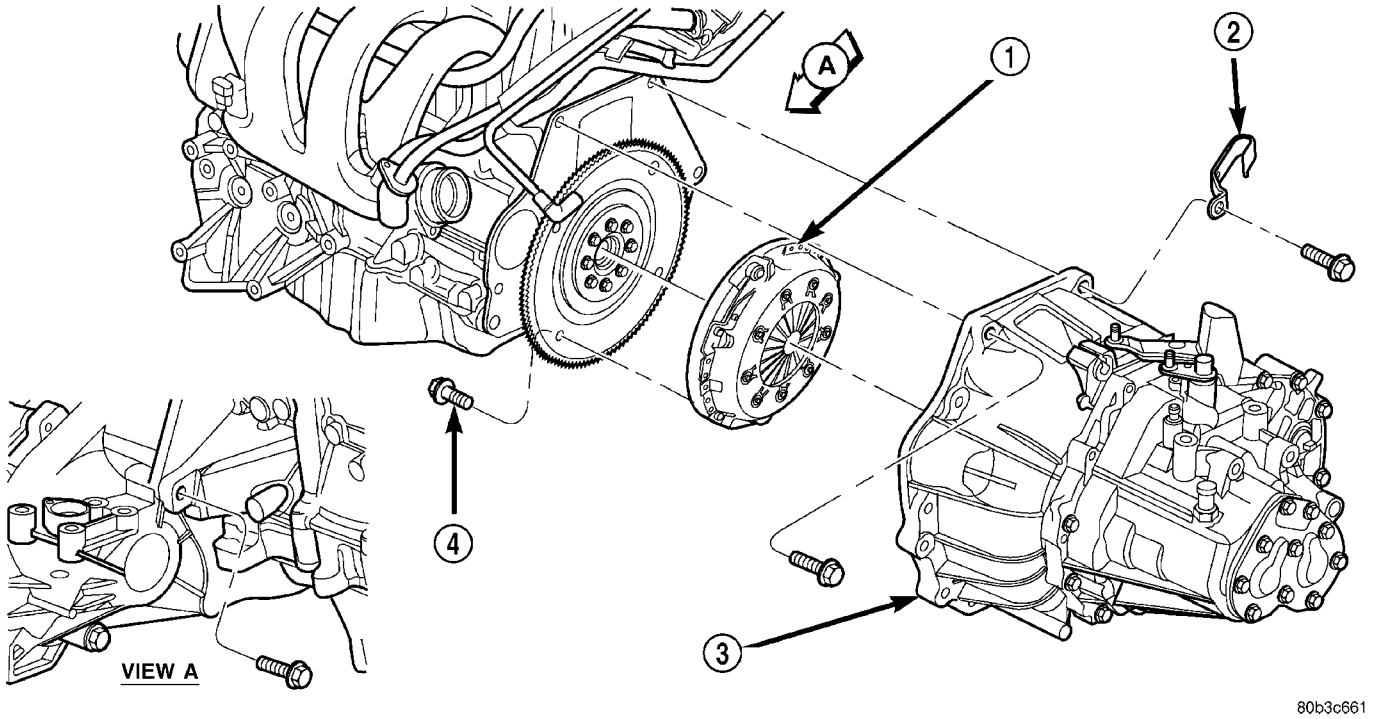

Fig. 20 Transaxle Removal/Installation (2.0/2.4L Shown)

1 - MODULAR CLUTCH ASSEMBLY
2 - CLIP
3 - TRANSAXLE
4 - CLUTCH MODULE BOLT (4)

(22) Carefully lower engine and transaxle on screw jack until proper removal clearance is obtained.

(23) Obtain a helper to assist in holding transaxle while removing transaxle-to-engine mounting bolts (Fig. 20).

(24) Remove transaxle from vehicle (Fig. 20).

(25) Remove clutch module (Fig. 20) from transaxle input shaft (if equipped).

(26) If installing a new or replacement transaxle, remove the upper mount as shown in (Fig. 21), transfer to the replacement unit and torque all bolts to 62 N·m (45 ft. lbs.) torque.

DISASSEMBLY

The T350 transaxle internal components can be serviced only by separating the gear case from the bellhousing case.

CAUTION: The transaxle output shaft is serviced as a unit. No disassembly and reassembly is possible. Damage to the transaxle may result.

(1) Place transaxle on bench.

(2) Remove the clutch release bearing and lever. Move the release fork and bearing to an in-line position. Grasp the release lever with two hands in the pivot stud socket area. Pull with even pressure to release the lever from the pivot stud.

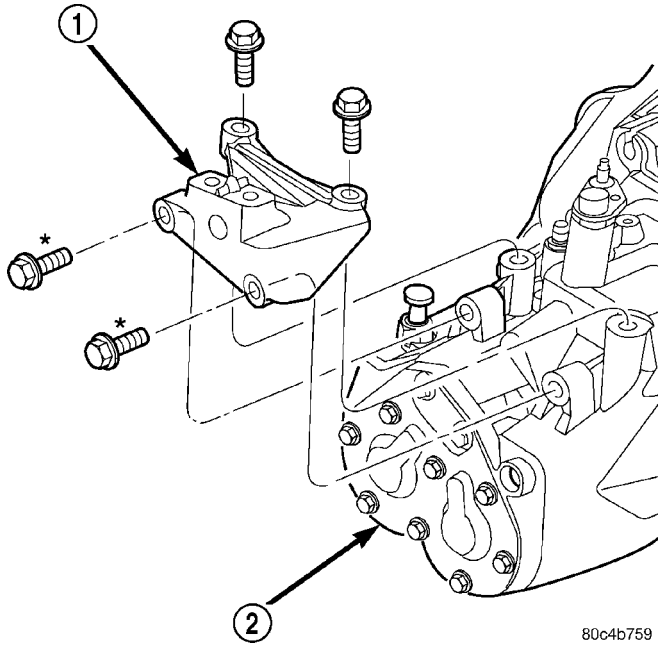

Fig. 21 Transaxle Upper Mount Bracket

1 - BRACKET
2 - TRANSAXLE

CAUTION: Do not use a screwdriver or pry bar to release the lever as this may cause damage to the lever and/or clip.

T350 MANUAL TRANSAXLE (Continued)

(3) Remove shift levers by driving out the roll pins.
(4) Remove transaxle case half bolts (Fig. 22).

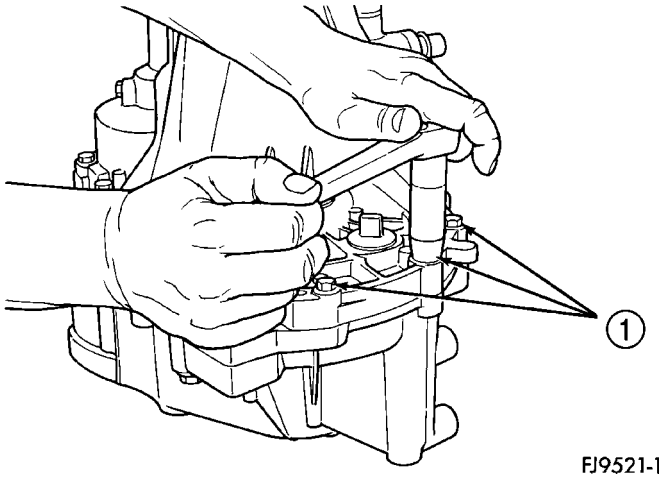

Fig. 22 Case Bolts

1 - CASE BOLTS

(5) Place two screwdrivers into the slots provided in the case halves near the dowels (Fig. 23). Separate the case halves (Fig. 24).

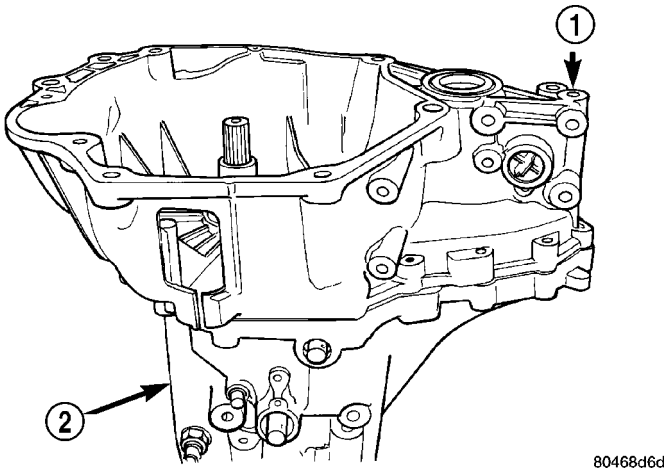

Fig. 23 Transaxle Case Halves

1 - BELLHOUSING HALF
2 - GEAR CASE HALF

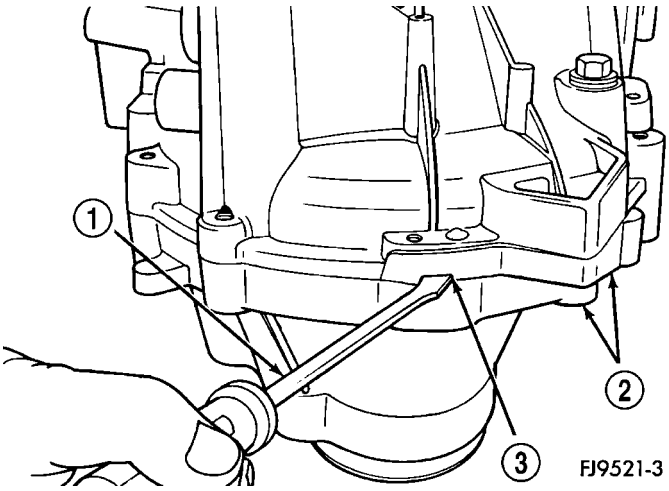

Fig. 24 Separate Case Halves

1 - PRY TOOL
2 - CASE HALVES
3 - PRY SLOT

(6) Remove bellhousing half from gear case half (Fig. 25).

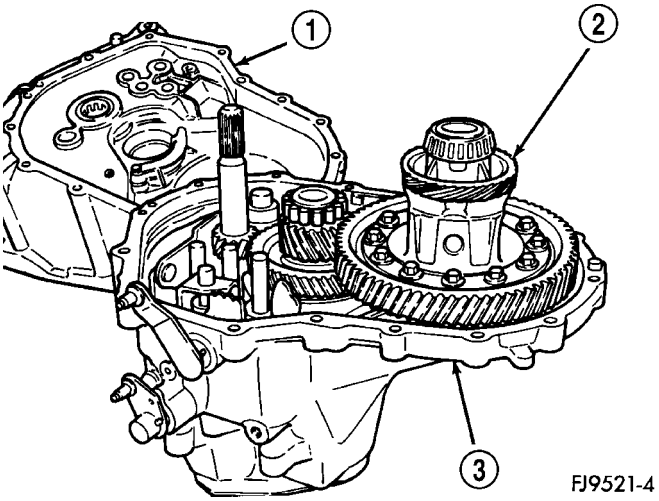

Fig. 25 Bellhousing Case Half Removal

1 - BELLHOUSING CASE HALF
2 - DIFFERENTIAL
3 - GEAR CASE HALF

T350 MANUAL TRANSAXLE (Continued)

(7) Remove output shaft roller bearing from output shaft.

(8) Remove differential assembly (Fig. 26).

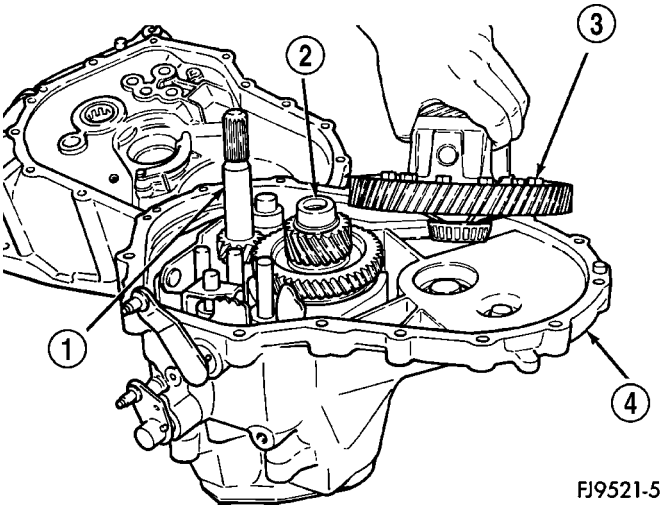

Fig. 26 Differential Assembly Removal

1 - INPUT SHAFT
2 - OUTPUT SHAFT
3 - DIFFERENTIAL
4 - CASE

(9) Remove reverse idler shaft bolt (Fig. 27).

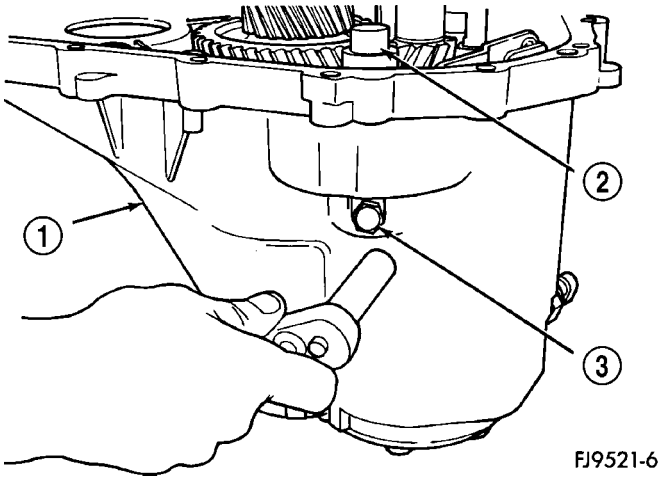

Fig. 27 Reverse Idler Shaft

1 - CASE
2 - REVERSE IDLER SHAFT
3 - REVERSE IDLER SHAFT BOLT

(10) Remove reverse idler shaft (Fig. 28).

(11) Remove reverse idler gear and spacer (Fig. 29).

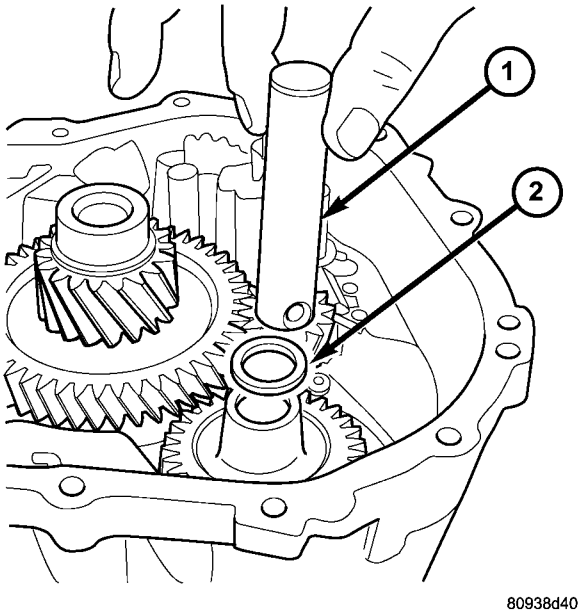

Fig. 28 Reverse Idler Shaft Removal

1 - REVERSE IDLER SHAFT
2 - SPACER

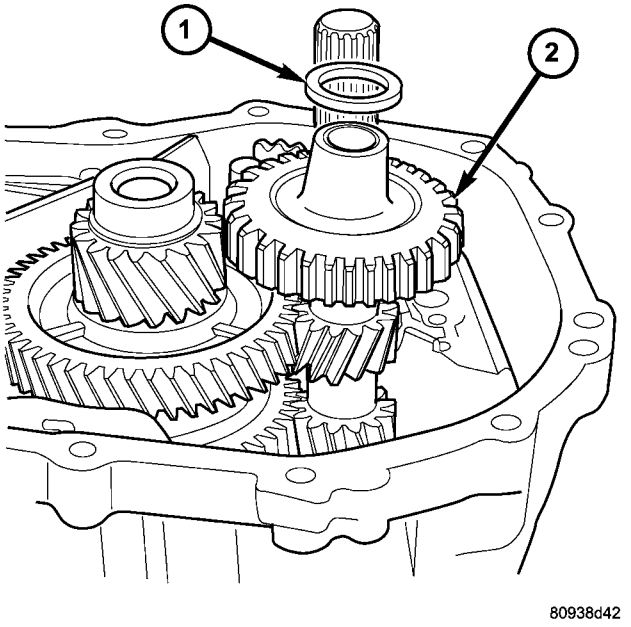

Fig. 29 Reverse Idler Gear and Spacer

1 - SPACER
2 - REVERSE IDLER GEAR

T350 MANUAL TRANSAXLE (Continued)

(12) Remove two screws retaining reverse fork bracket (Fig. 30). Remove reverse fork bracket and reverse cam blockout assembly (Fig. 31).

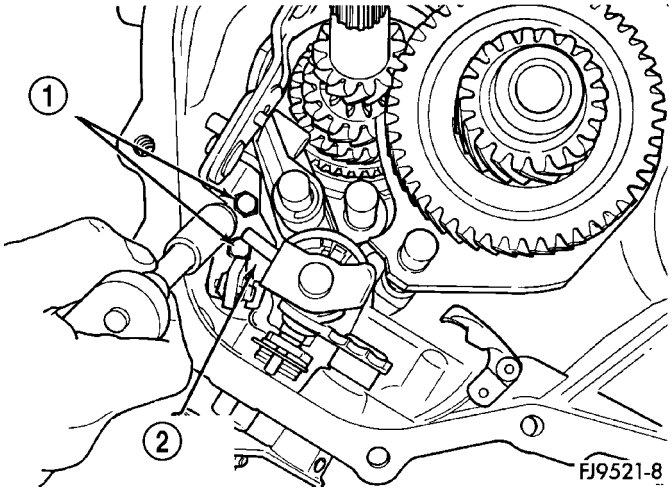

Fig. 30 Screws Retaining Reverse Fork Bracket

1 - SCREWS (2)
2 - REVERSE FORK BRACKET

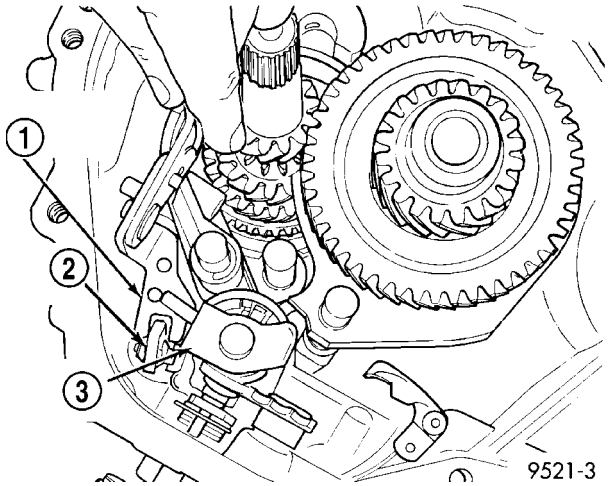

Fig. 31 Remove Reverse Fork Bracket

1 - REVERSE FORK BRACKET
2 - REVERSE CAM BLOCKOUT
3 - SHIFT BLOCKER ASSEMBLY

(13) Using snap–ring pliers, remove selector shaft spacer (Fig. 32).

(14) Pull the selector shaft shift pin out of the slot in the blocker assembly. Turn selector shaft up and out of the way (Fig. 33).

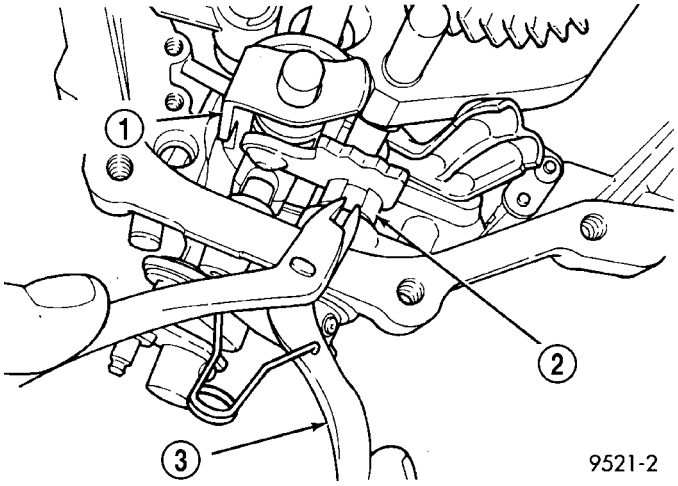

Fig. 32 Remove Selector Shaft Spacer

1 - SHIFT BLOCKER ASSEMBLY
2 - SELECTOR SHAFT SPACER (PLASTIC)
3 - SNAP RING PLIERS

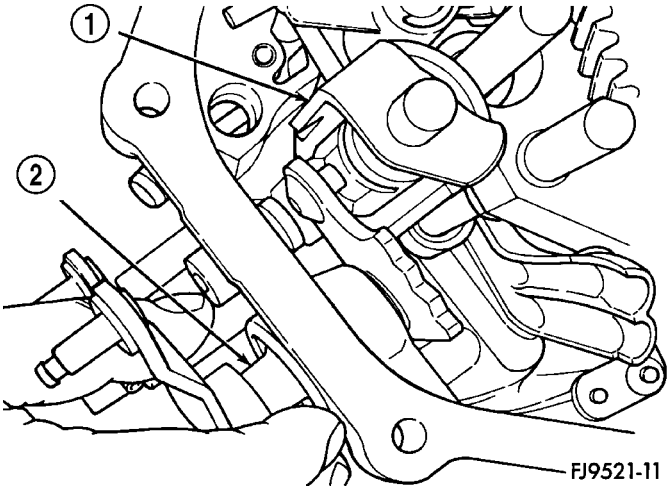

Fig. 33 Selector Shaft

1 - SHIFT ASSEMBLY
2 - SELECTOR SHAFT

T350 MANUAL TRANSAXLE (Continued)

(15) Remove transaxle end cover (Fig. 34) (Fig. 35).

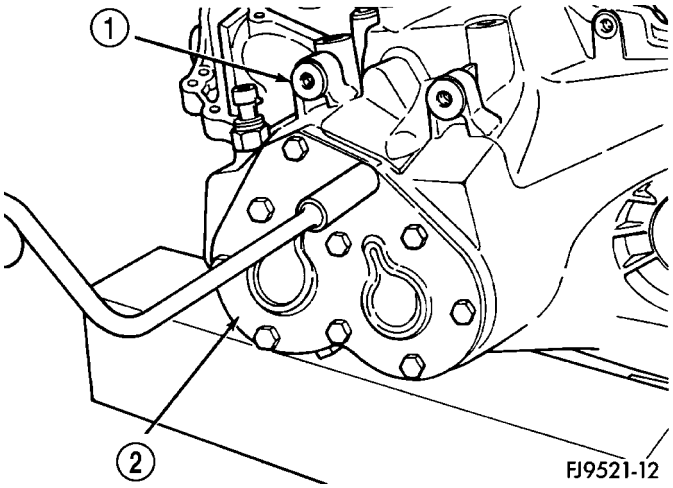

Fig. 34 Transaxle Cover Removal

1 - TRANSAXLE CASE
2 - END COVER

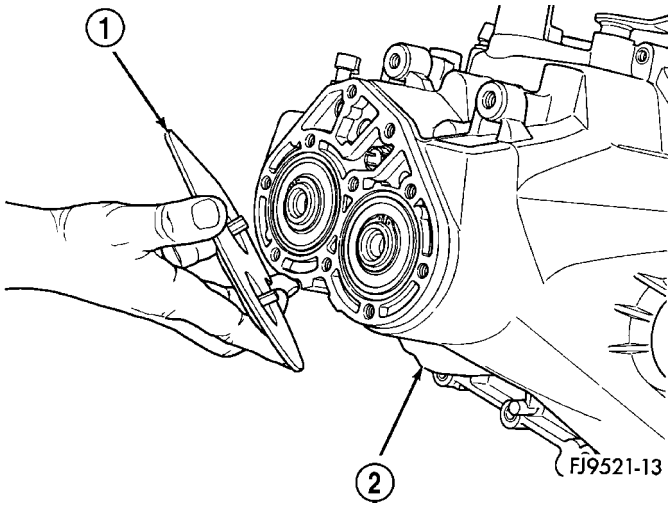

Fig. 35 End Cover

1 - END COVER
2 - CASE

(16) Remove two snap rings retaining the output shaft and the input shaft to the bearings (Fig. 36).

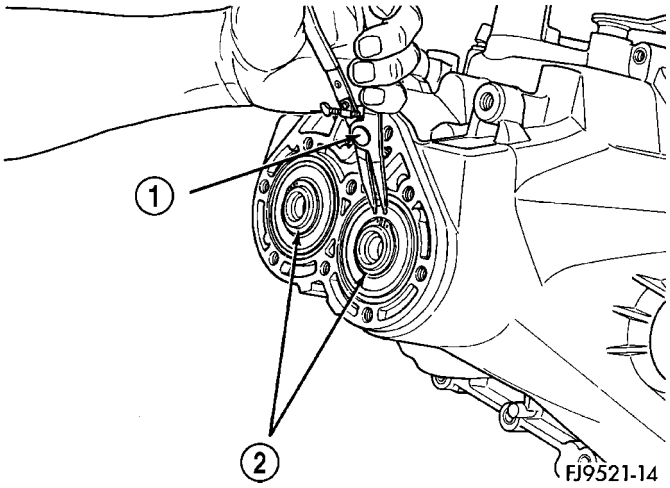

Fig. 36 Snap Rings Retaining Bearings

1 - SNAP RING PLIERS
2 - SNAP RINGS

(17) Using bench fixture and shims provided (Miller tools # 6785, 6785-1, and 6785-2), turn transaxle over. Install transaxle onto bench fixture (Fig. 37). Verify shim spacers are in position on bench fixture. Install transaxle into shop press.

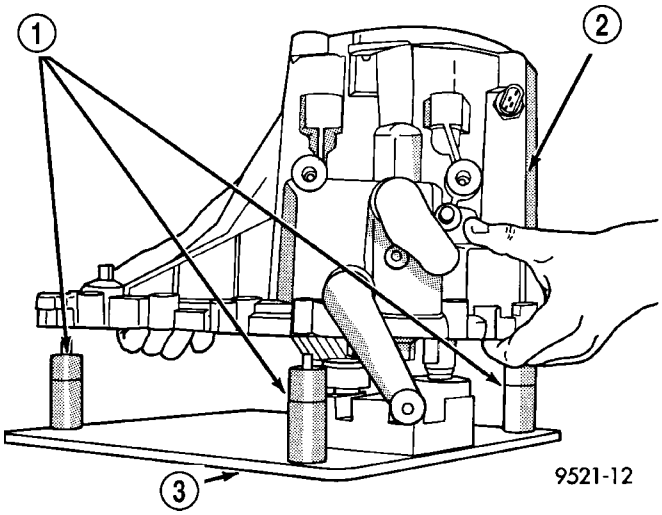

Fig. 37 Bench Fixture

1 - SHIMS
2 - TRANSAXLE
3 - 6785 BENCH FIXTURE

T350 MANUAL TRANSAXLE (Continued)

(18) Install bearing fixture Miller tool #6768 onto transaxle end bearings (Fig. 38). Verify tool is properly aligned to input and output shafts.

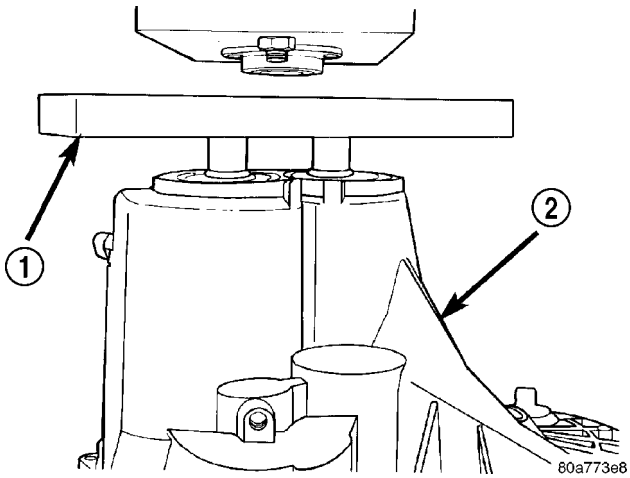

Fig. 38 Bearing Fixture

1 - BEARING FIXTURE
2 - TRANSAXLE CASE

CAUTION: The oil dams in the input and output shafts can be damaged while pressing on the shafts if the bearing fixture is not used properly.

(19) Install transaxle gear case into shop press. Press output and input shaft assemblies out of case (Fig. 39).

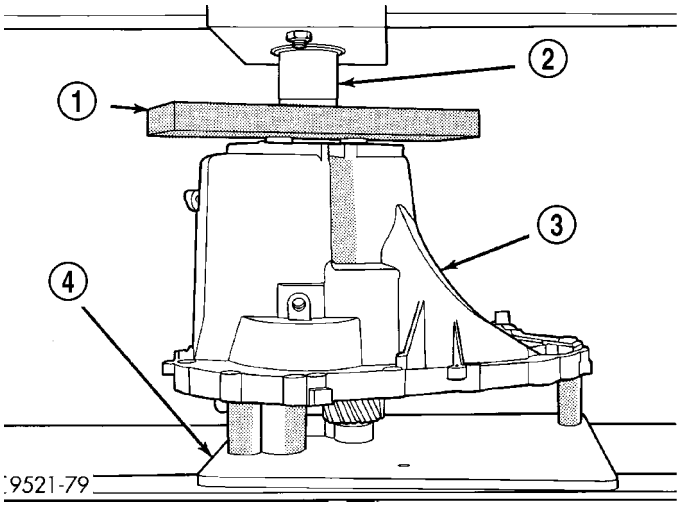

Fig. 39 Pressing Gears Out of Case

1 - BEARING FIXTURE
2 - PRESS RAM
3 - TRANSAXLE CASE
4 - BENCH FIXTURE

(20) Remove transaxle from press.

(21) Carefully remove transaxle case from the shaft assemblies and bench fixture (Fig. 40). Be sure the oil–feed trough to the end bearings is not damaged (Fig. 41).

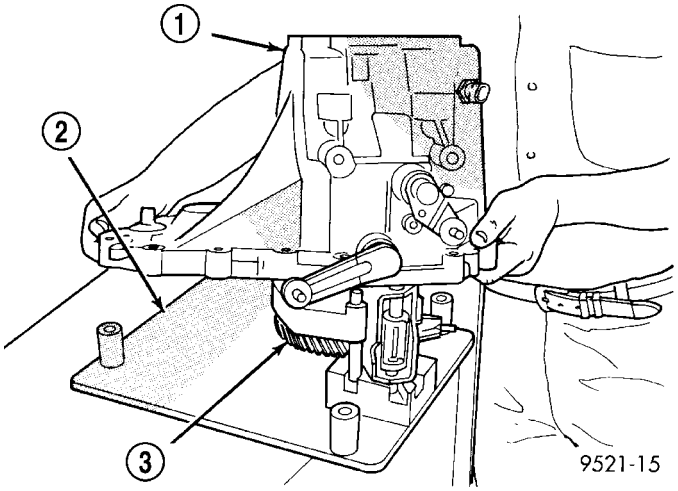

Fig. 40 Transaxle Case Removal

1 - TRANSAXLE CASE
2 - BENCH FIXTURE
3 - GEARTRAIN

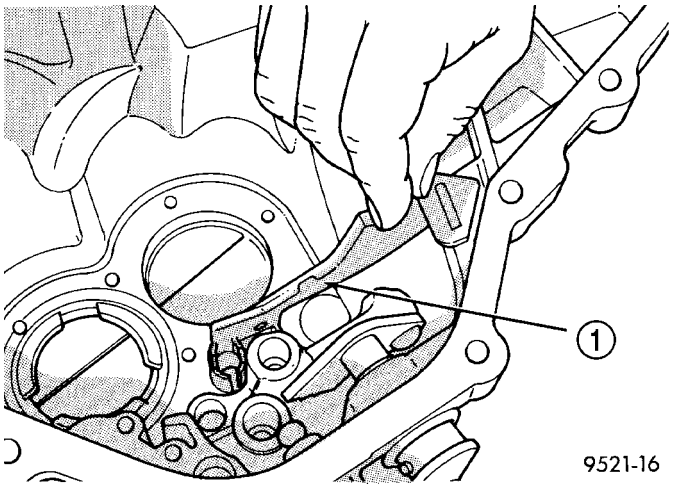

Fig. 41 Oil Feed Trough

1 - OIL FEED TROUGH

T350 MANUAL TRANSAXLE (Continued)

(22) Remove the reverse brake friction cone and blocking ring from the input shaft assembly (Fig. 42) (Fig. 43).

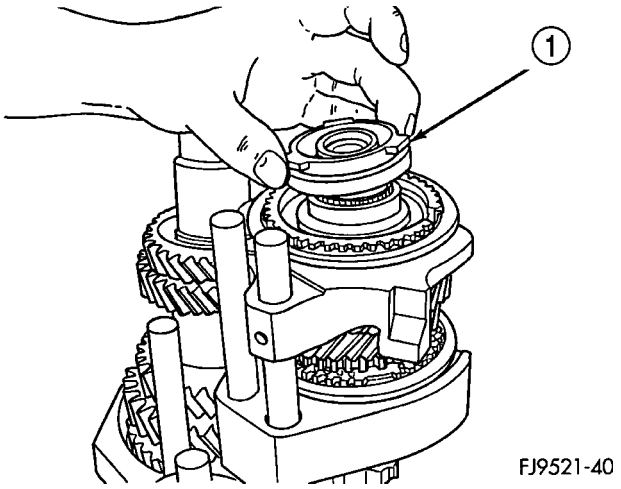

Fig. 42 Reverse Brake Friction Cone

1 - REVERSE BRAKE FRICTION CONE

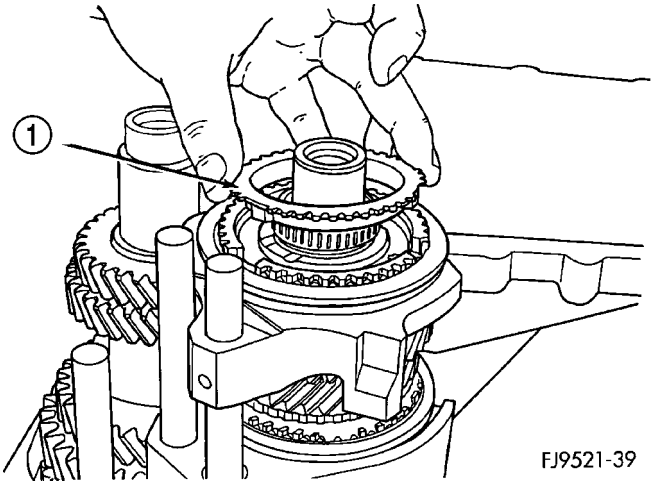

Fig. 43 Reverse Brake Blocking Ring

1 - REVERSE BRAKE BLOCKING RING

(23) Remove the shift blocker assembly from the bench fixture (Fig. 44).

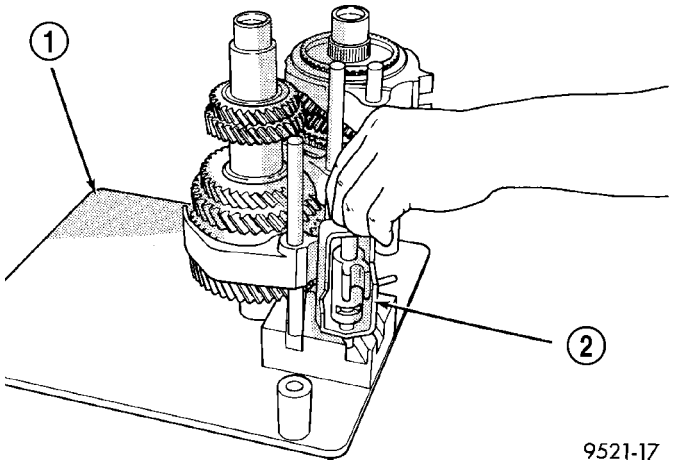

Fig. 44 Shift Blocker Removal

1 - 6785 BENCH FIXTURE
2 - SHIFT BLOCKER ASSEMBLY

(24) Remove the 1-2 shift fork from the output shaft (Fig. 45).

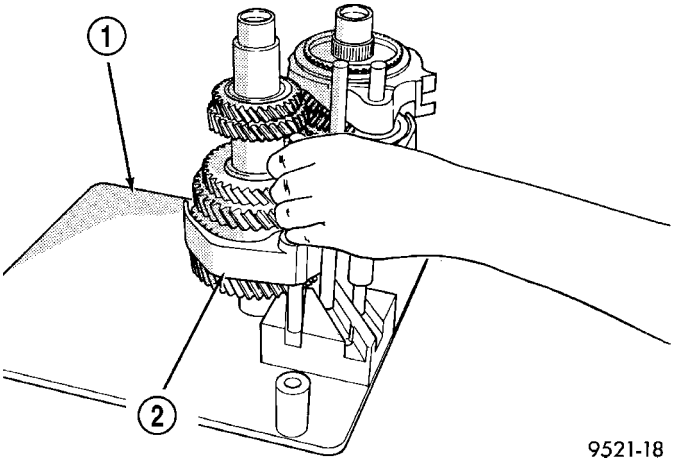

Fig. 45 1–2 Shift Fork Removal

1 - 6785 BENCH FIXTURE
2 - 1–2 SHIFT FORK

T350 MANUAL TRANSAXLE (Continued)

(25) Remove input and output shaft assemblies from bench fixture (Fig. 46).

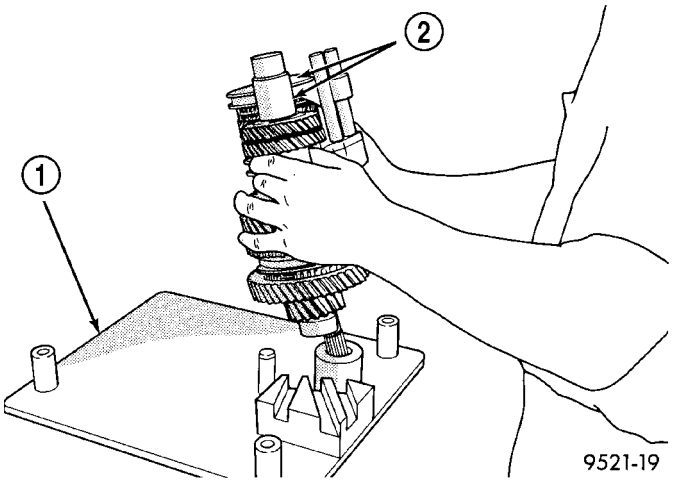

Fig. 46 Gear Train Removal

1 - 6785 BENCH FIXTURE
2 - INPUT AND OUTPUT SHAFTS

CAUTION: The output shaft assembly is serviced as an assembly. Do not try to repair any component on the output shaft. If the 1-2 synchronizer or gear fails, it is necessary to replace the complete output shaft assembly.

CLEANING

Clean the gears, bearings, shafts, synchronizers, thrust washers, oil feeder, shift mechanism, gear case, and bellhousing with solvent. Dry all parts except the bearings with compressed air. Allow the bearings to either air dry or wipe them dry with clean shop towels.

INSPECTION

Inspect the gears, bearings, shafts and thrust washers. Replace the bearings and cups if the rollers are worn, chipped, cracked, flat spotted, or brinnelled, or if the bearing cage is damaged or distorted. Replace the thrust washers if cracked, chipped, or worn. Replace the gears if the teeth are chipped, cracked, or worn thin. Inspect the synchronizers. Replace the sleeve if worn or damaged in any way. Replace the stop rings if the friction material is burned, flaking off, or worn. Check the condition of the synchro keys and springs. Replace these parts if worn, cracked, or distorted.

ASSEMBLY

The T350 transaxle internal components can be serviced only by separating the gear case from the bellhousing case.

CAUTION: The transaxle output shaft is serviced as a unit. No disassembly and reassembly is possible. Damage to the transaxle may result.

The sealant used to seal the transaxle case halves is Mopar® Gasket Maker, Loctite® 518, or equivalent. The sealant used for the bearing end plate cover is Mopar® RTV.

(1) Verify bench fixture shims are removed from bench fixture. Install output and input shafts into bench fixture (Miller tool #6785) (Fig. 47).

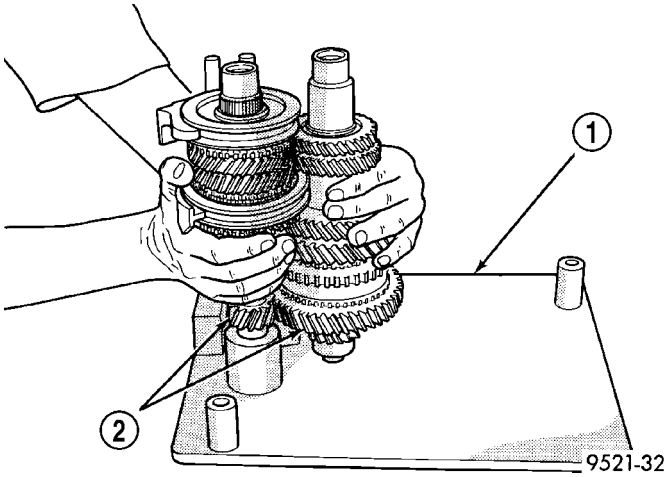

Fig. 47 Bench Fixture

1 - BENCH FIXTURE
2 - GEARTRAIN

(2) Install shift rails and forks into bench fixture (Fig. 48).

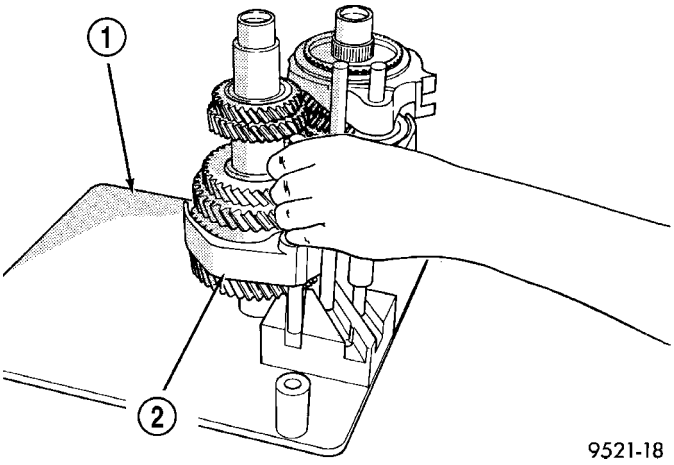

Fig. 48 Shift Rail Installation

1 - 6785 BENCH FIXTURE
2 - 1–2 SHIFT FORK

T350 MANUAL TRANSAXLE (Continued)

(3) Install shift blocker assembly into bench fixture (Fig. 49).

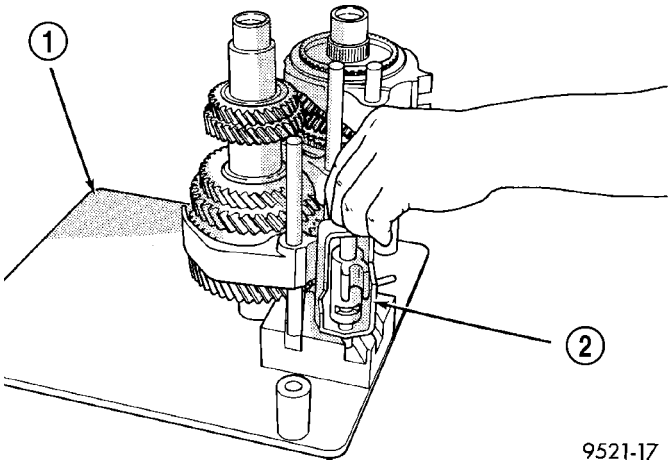

Fig. 49 Shift Blocker Installation

1 - 6785 BENCH FIXTURE
2 - SHIFT BLOCKER ASSEMBLY

(4) Install reverse brake blocking ring (Fig. 50).

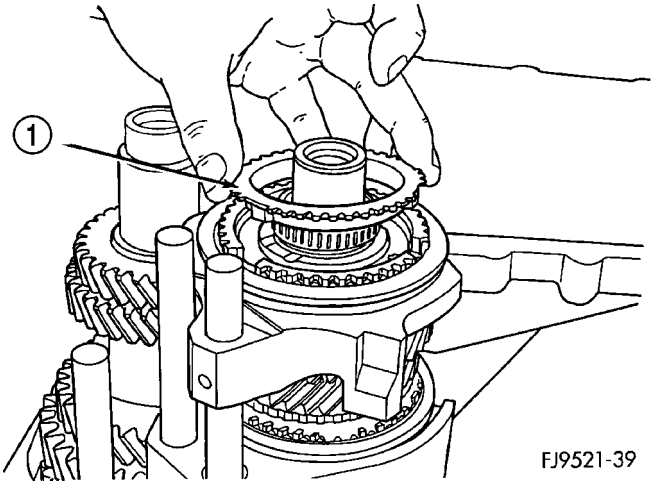

Fig. 50 Reverse Brake Blocking Ring Installation

1 - REVERSE BRAKE BLOCKING RING

(5) Install reverse brake friction cone (Fig. 51).

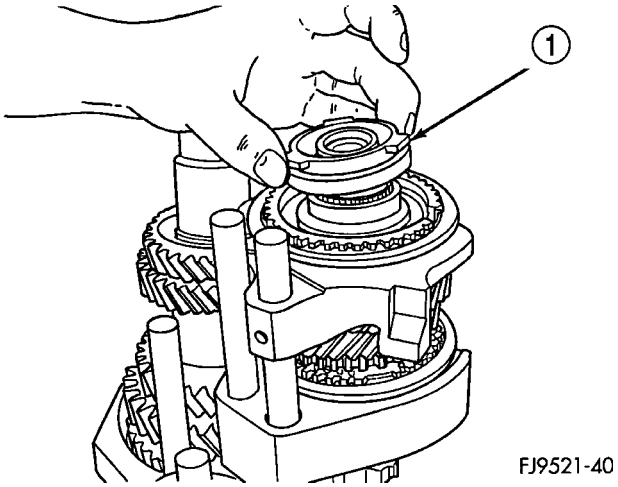

Fig. 51 Reverse Brake Friction Cone Installation

1 - REVERSE BRAKE FRICTION CONE

(6) Install gear–case half over bench fixture (Fig. 52). Line up shift finger over 3-4 lug.

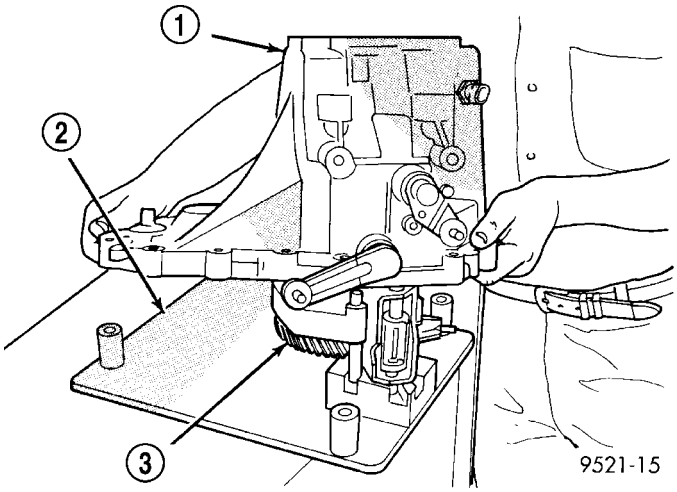

Fig. 52 Gear Case Half

1 - TRANSAXLE CASE
2 - BENCH FIXTURE
3 - GEARTRAIN

T350 MANUAL TRANSAXLE (Continued)

(7) Line up reverse brake friction cone lugs to the slots in the gear case (Fig. 53). Verify reverse brake shim is in position.

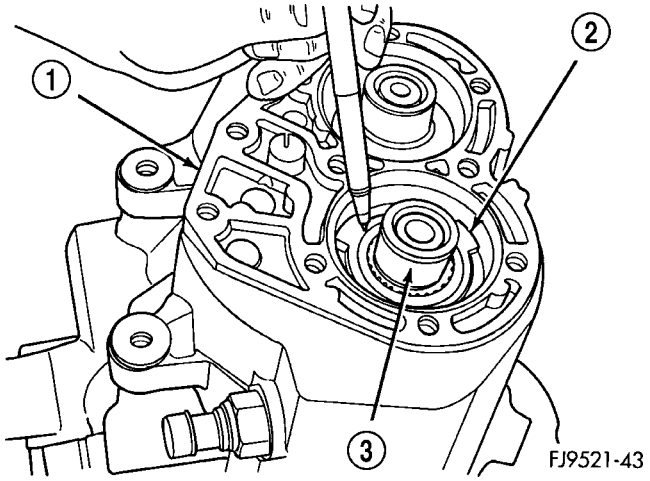

Fig. 53 Friction Cone Lugs

1 - CASE
2 - FRICTION CONE LUGS
3 - INPUT SHAFT

(8) Position input and output bearings on the shafts. Using Miller tool C-4992-1, press on input and output shaft bearings until they bottom into the case and against the shafts (Fig. 54).

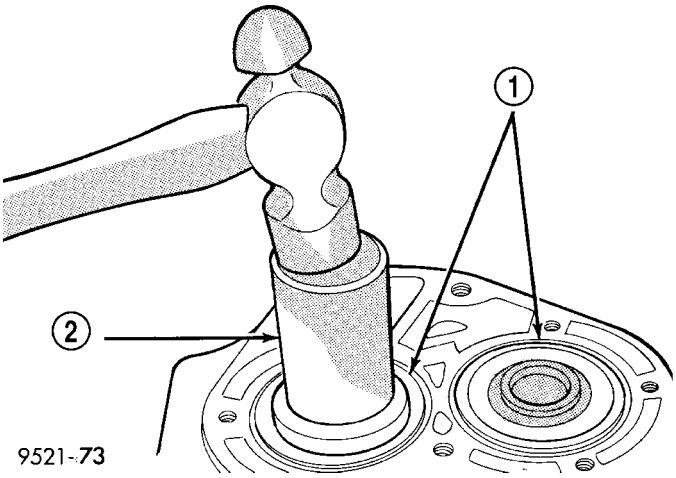

Fig. 54 Installing Input and Output Bearings

1 - INPUT AND OUTPUT BEARINGS
2 - SPECIAL TOOL C-4992-1

(9) Install shaft snap rings at input and output bearings (Fig. 55).

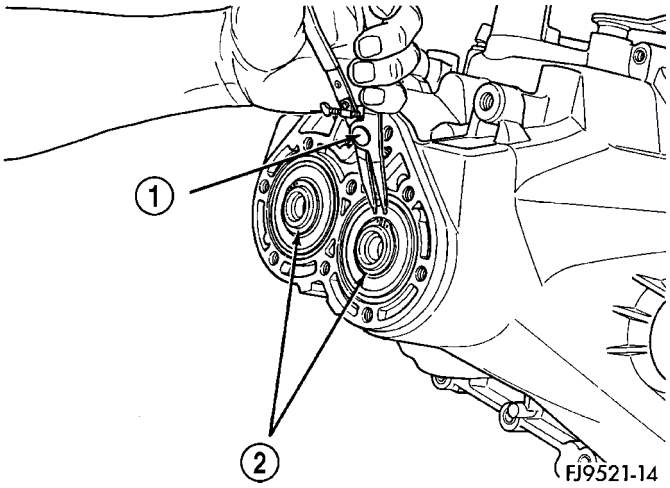

Fig. 55 Snap Rings Retaining Bearings

1 - SNAP RING PLIERS
2 - SNAP RINGS

(10) Apply Mopar® RTV sealant to end–cover outer edge and around bolt holes. Install end–cover onto gear case. Tighten end cover bolts to 29 N·m (21 ft. lbs.) torque (Fig. 56).

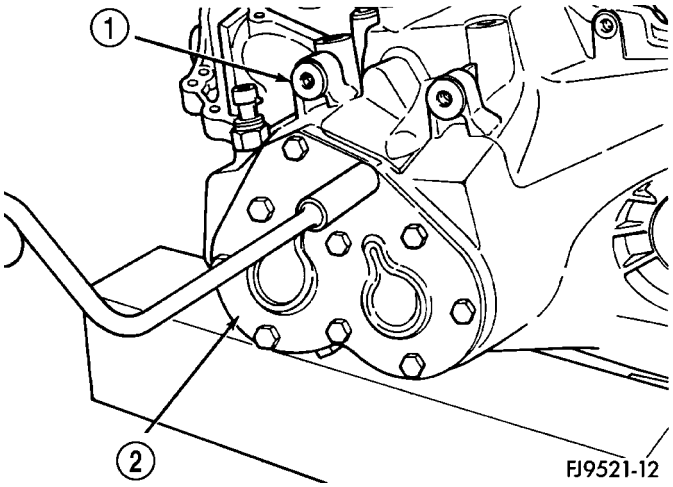

Fig. 56 Transaxle End Cover

1 - TRANSAXLE CASE
2 - END COVER

T350 MANUAL TRANSAXLE (Continued)

(11) Remove gear case from bench fixture.

(12) Install gear case in a holding fixture with end cover facing down.

(13) Turn selector shaft into slot on blocker assembly (Fig. 57).

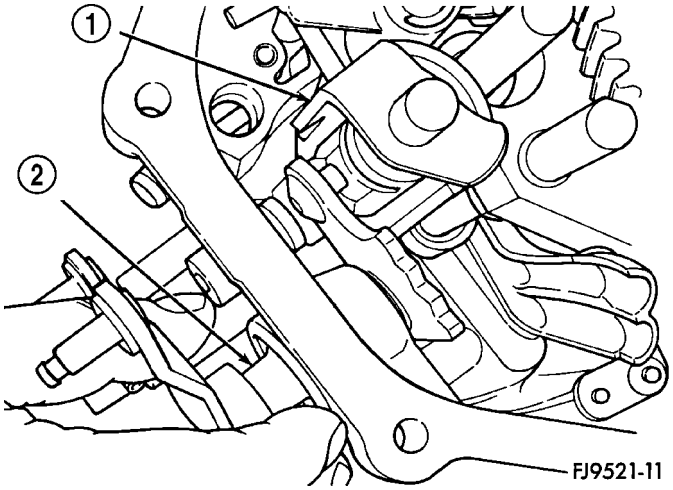

Fig. 57 Selector Shaft

1 - SHIFT ASSEMBLY
2 - SELECTOR SHAFT

(14) Push selector shaft spacer clip onto selector shaft. Install shift levers.

(15) Install reverse idler gear and spacer as shown in (Fig. 58).

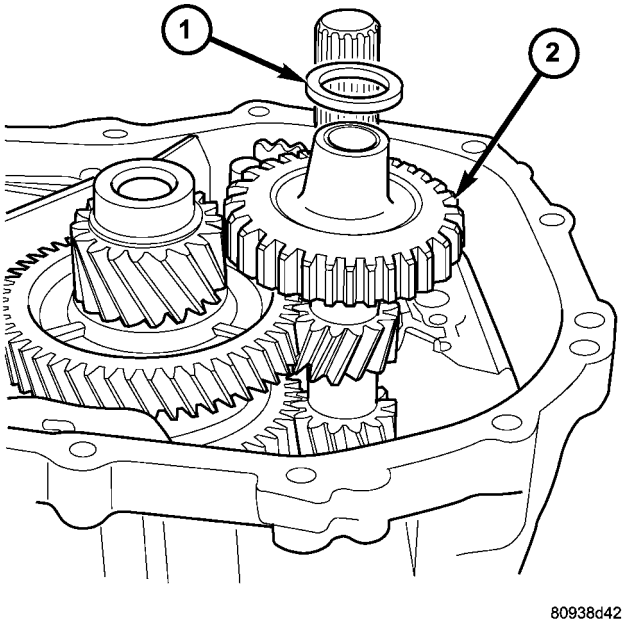

Fig. 58 Reverse Idler Gear and Spacer

1 - SPACER
2 - REVERSE IDLER GEAR

(16) Install reverse idler shaft (Fig. 59).

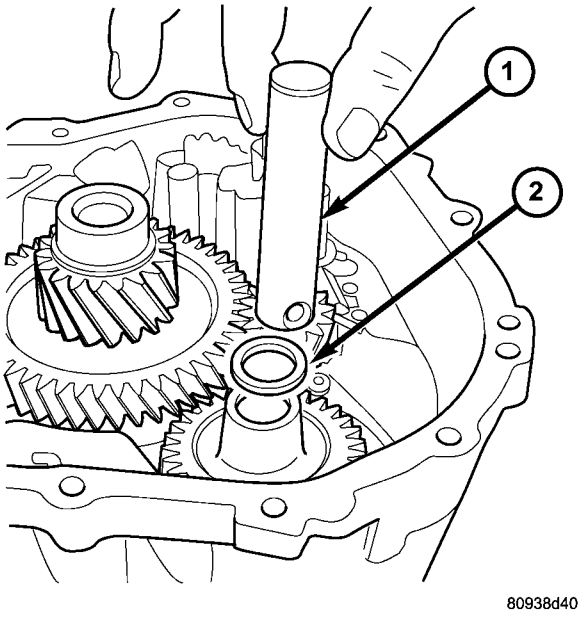

Fig. 59 Reverse Idler Shaft Installation

1 - REVERSE IDLER SHAFT
2 - SPACER

(17) Install bolt into shaft and tighten to 26 N·m (19 ft. lbs.) torque (Fig. 60).

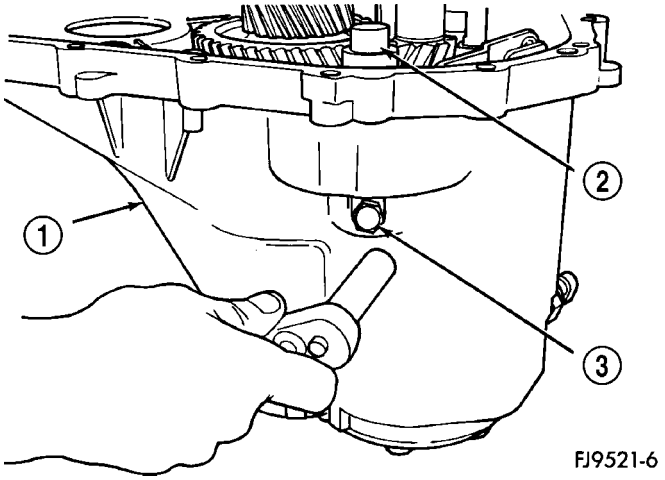

Fig. 60 Reverse Idler Shaft Bolt

1 - CASE
2 - REVERSE IDLER SHAFT
3 - REVERSE IDLER SHAFT BOLT

T350 MANUAL TRANSAXLE (Continued)

(18) Install reverse fork bracket and reverse lockout. Tighten screws to 11 N·m (96 in. lbs.) torque (Fig. 61) (Fig. 62).

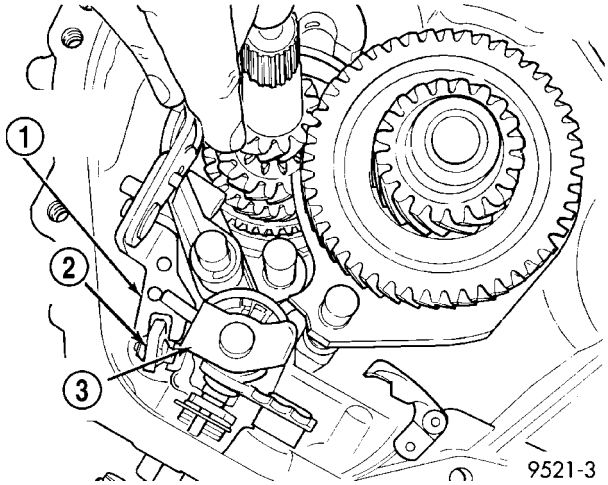

Fig. 61 Reverse Fork Bracket

1 - REVERSE FORK BRACKET
2 - REVERSE CAM BLOCKOUT
3 - SHIFT BLOCKER ASSEMBLY

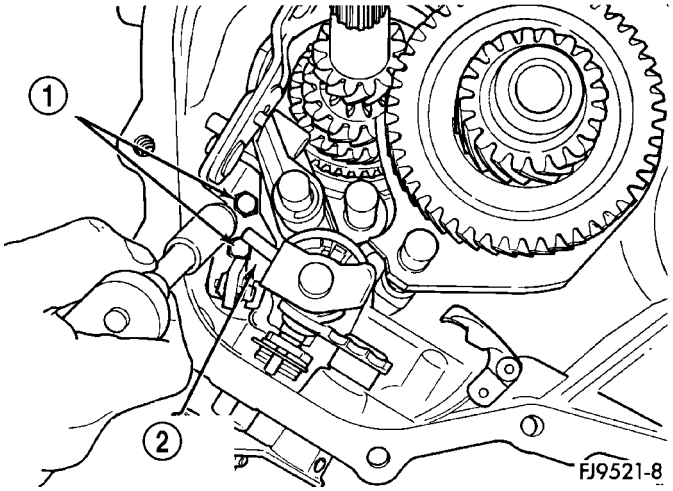

Fig. 62 Reverse Fork Screws

1 - SCREWS (2)
2 - REVERSE FORK BRACKET

(19) Install differential into gear case (Fig. 63).

BEARING ADJUSTMENT PROCEDURE

(1) Use extreme care when removing and installing bearing cups and cones. Use only an arbor press for installation, as a hammer may not properly align the bearing cup or cone. Burrs or nicks on the bearing seat gives a false end–play reading while gauging for proper shims. Improperly seated bearing cups and cones are subject to low–mileage failure.

(2) Bearing cups and cones should be replaced if they show signs of pitting or heat distress. If distress

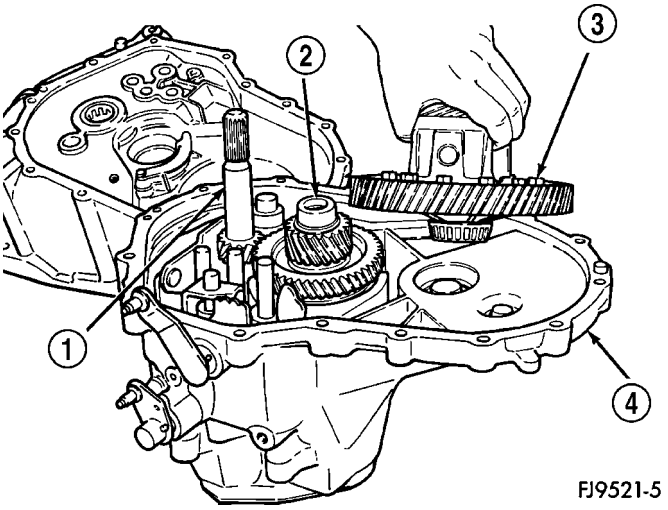

Fig. 63 Differential Assembly

1 - INPUT SHAFT
2 - OUTPUT SHAFT
3 - DIFFERENTIAL
4 - CASE

is seen on either the cup or bearing rollers, both cup and cone must be replaced.

(3) Bearing preload and drag torque specifications must be maintained to avoid premature bearing failures. Used (original) bearings may lose up to 50% of the original drag torque after break–in. All bearing adjustments must be made with no other component interference or gear intermesh.

(4) Replace bearings as a pair: If one differential bearing is defective, replace both differential bearings, if one input shaft bearing is defective, replace both input shaft bearings.

(5) Bearing cones must not be reused if removed.

(6) Turning–torque readings should be obtained while smoothly rotating in either direction.

DIFFERENTIAL BEARING PRELOAD ADJUSTMENT

NOTE: True bearing turning–torque readings can be obtained only with the geartrain removed from the case.

(1) Remove bearing cup and existing shim from clutch bellhousing case.

(2) Press in new bearing cup into bellhousing case (or use a cup that has been ground down on the outer edge for ease of measurement).

(3) Press in new bearing cup into gear case side.

(4) Oil differential bearings with transmission fluid. Install differential assembly in transaxle gear case. Install clutch bellhousing over gear case. Install and torque case bolts to 29 N·m (21 ft. lbs.).

(5) Position transaxle with bellhousing facing down on workbench with C-clamps. Position dial indicator.

T350 MANUAL TRANSAXLE (Continued)

NOTE: Position of dial indicator in (Fig. 64) is for illustrative purposes only. The dial indicator should be parallel to T-Handle to obtain the most accurate reading.

(6) Apply a medium load to differential with Tool C-4995 and a T-handle, in the downward direction. Roll differential assembly back and forth a number of times. This will settle the bearings. Zero the dial indicator. To obtain end play readings, apply a medium load in an upward direction while rolling differential assembly back and forth (Fig. 64). Record end play.

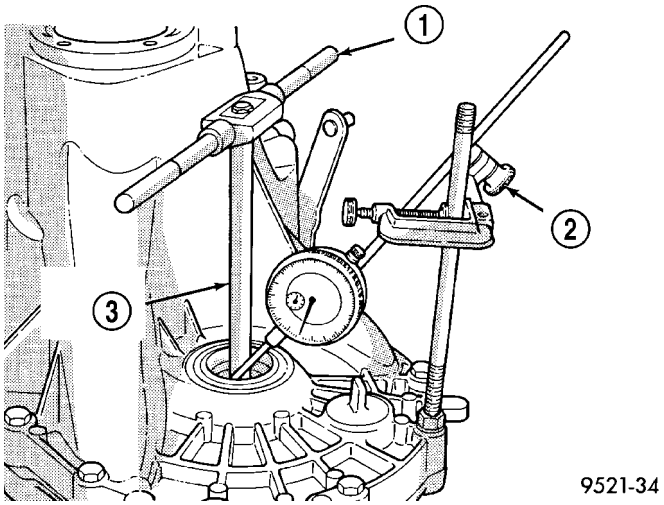

Fig. 64 Checking Differential Bearing End Play To Determine Shim Thickness

1 - T-HANDLE
2 - DIAL INDICATOR SET
3 - SPECIAL TOOL C-4995

(7) The shim required for proper bearing preload is the **total of end play, plus (constant) preload of 0.18mm (0.007 in.).** Never combine shims to obtain the required preload.

(8) Remove case bolts. Remove clutch bellhousing differential bearing cup. Install shim(s) selected in Step 7. Then press the bearing cup into clutch bellhousing.

(9) Install clutch bellhousing. Install and torque case bolts to 26 N·m (19 ft. lbs.).

(10) Using Special Tool C-4995 and an inch-pound torque wrench, check turning torque of the differential assembly (Fig. 65). **The turning torque should be 6 to 12 in. lbs. If the turning torque is too high, install a 0.05mm (0.002 inch) thinner shim. If the turning torque is too low, install a 0.05mm (0.002 inch) thicker shim.**

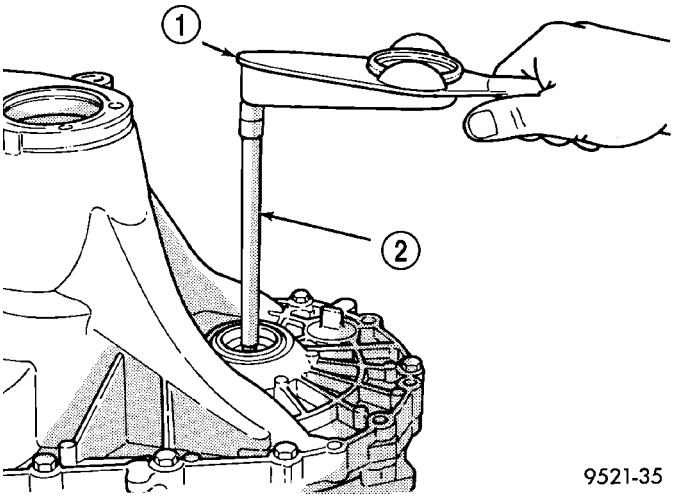

Fig. 65 Checking Differential Bearing Turning Torque

1 - INCH-POUND TORQUE WRENCH
2 - SPECIAL TOOL C-4995

(11) Recheck turning torque. Repeat Step 10 until the proper turning torque is obtained.

Once proper turning torque has been established, place gear case on the end plate. Draw a bead of Mopar® Gasket Maker, Loctite® 518, or equivalent, on the flat surface of the case mating flange. Install clutch bellhousing onto gear case. Install and tighten case bolts to 29 N·m (21 ft. lbs.).

T350 MANUAL TRANSAXLE (Continued)

INSTALLATION

(1) Install clutch module (if equipped) onto input shaft. Install transaxle into position.

(2) Install transaxle-to-engine mounting bolts (Fig. 20) and tighten to 108 N·m (80 ft. lbs.) torque.

(3) Raise engine and transaxle with screw jack until upper mount bracket aligns with upper mount. Install mount bolts and tighten to 68 N·m (50 ft. lbs.) torque (Fig. 19).

(4) Remove screwjack.

(5) Install four (4) modular clutch-to-driveplate bolts (Fig. 66). Align drive plate and modular clutch alignment marks placed upon disassembly. Start with tight-tolerance (slotted) hole, install and torque bolts to 88 N·m (65 ft. lbs.) torque.

(6) Install starter motor and tighten bolts to 54 N·m (40 ft. lbs.) torque. Make sure to fasten ground cable to upper starter bolt as shown in (Fig. 18).

(7) Connect starter electrical harness and tighten positive cable nut to 10 N·m (90 in. lbs.) torque.

(8) Install bellhousing dust cover (Fig. 16).

(9) Install left engine-to-transaxle bending brace and structural collar (Fig. 15). Refer to ENGINE for proper tightening procedure.

(10) Install power steering hose to structural collar.

(11) Install the right lateral bending brace and tighten bolts to 81 N·m (60 ft. lbs.) torque (Fig. 17).

(12) Install both front axle driveshafts.

(13) Fill transaxle with suitable amount of fluid.

(14) Connect clutch master cylinder tube to the hydraulic clutch slave cylinder (Fig. 12) (Fig. 13). An audible click should be heard. Verify connection by pushing and pulling quick connect.

(15) Lower vehicle.

(16) Connect vehicle speed sensor connector (Fig. 10).

(17) Connect shift crossover and selector cables to shift lever. Install cables to bracket and install retaining clips (Fig. 9).

(18) Connect back-up lamp switch connector (Fig. 8).

(19) Install battery tray (Fig. 7).

(20) Install battery and tighten hold down clamp to secure battery (Fig. 6).

(21) Install the air cleaner assembly (Fig. 5).

(22) Connect the battery cables.

(23) Road test vehicle and inspect for leaks.

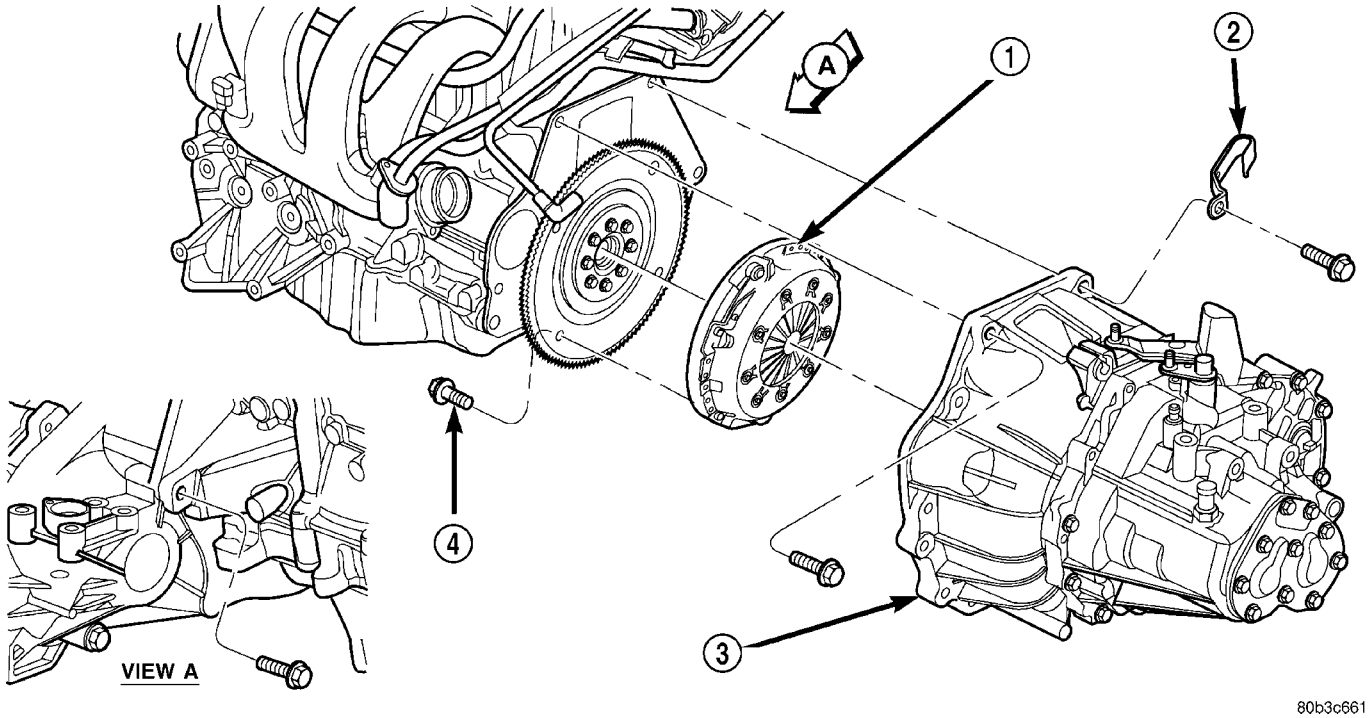

Fig. 66 Transaxle Removal/Installation (2.0/2.4L Shown)

1 - MODULAR CLUTCH ASSEMBLY
2 - CLIP
3 - TRANSAXLE
4 - CLUTCH MODULE BOLT (4)

T350 MANUAL TRANSAXLE (Continued)

SPECIFICATIONS

Bolts that have thread sealer or torque lock patches should not be reused. Always install new bolts in these applications.

TORQUE SPECIFICATIONS

DESCRIPTION	N·m	Ft. Lbs.	In. Lbs.
Back-up Lamp Switch	24	18	—
Crossover Cable Adj. Screw	8	—	70
Drain Plug	30	—	267
Differential Ring Gear Bolts	81	60	—
Dust Shield to Transaxle	12	—	105
End Plate Cover Bolts	29	21	—
Front Engine Mount to Trans	108	80	—
Front Mount Through Bolt	61	45	—
Front Mount to Engine Bolt	54	40	—
Lateral Bending Strut to Engine	54	40	—
Lateral Bending Strut to Trans.	54	40	—
Left Mount Through Bolt	108	80	—
Left Mount to Transaxle	54	40	—
Output Bearing Race Ret. Strap	11	—	96
Reverse Fork Bracket	11	—	96
Reverse Idler Shaft Bolt	29	19	—
Shift Cable Bracket to Transaxle	28	—	250
Transaxle Case Bolts	29	21	—
Transaxle to Engine Bolt	95	70	—
Vehicle Speed Sensor	7	—	60
Vertical Bending Strut to Engine	108	80	—
Vertical Bending Strut to Trans.	108	80	—

NV T350 (A-578) MANUAL TRANSAXLE FLUID FILL

TRANSAXLE	METRIC MEASURE	U.S. MEASURE
NV T350	2.4-2.7 Liters	2.5-2.8 Quarts

T350 MANUAL TRANSAXLE (Continued)

SPECIAL TOOLS

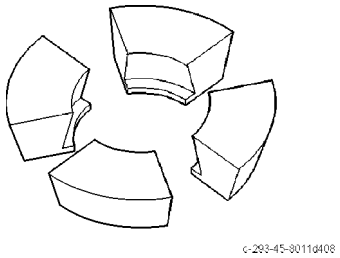

Adapter Blocks C-293–45

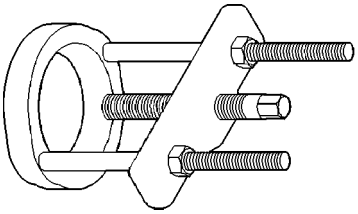

Puller Press C-293–PA

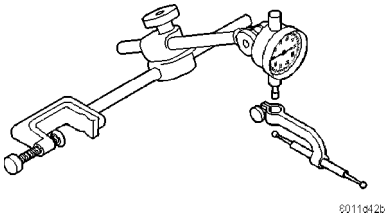

Dial Indicator C-3339

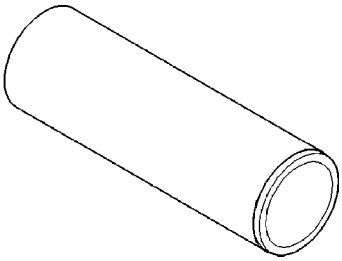

Sleeve C-3717

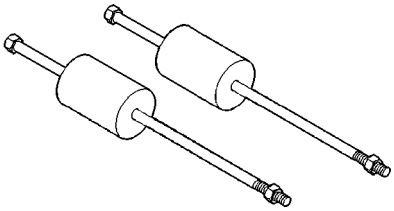

Slide Hammer C-3752

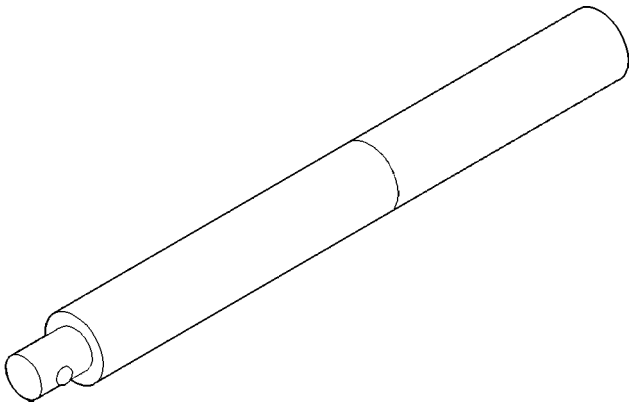

Universal Handle C-4171

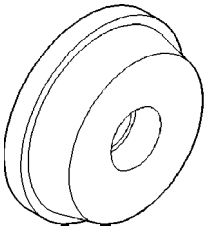

Bearing Installer C-4628

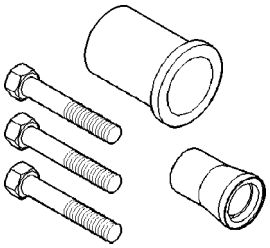

Seal Remover C-4680

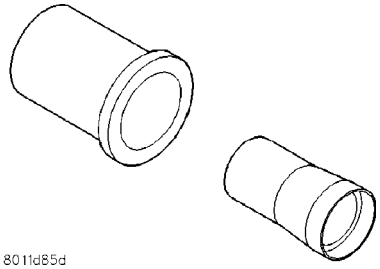

Seal Installer C-4992

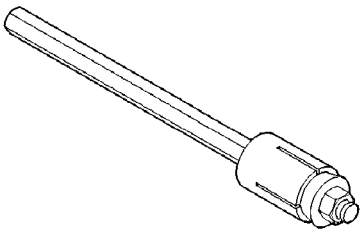

Torque Tool C-4995

T350 MANUAL TRANSAXLE (Continued)

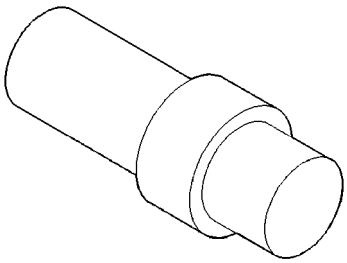

Adapter C-4996

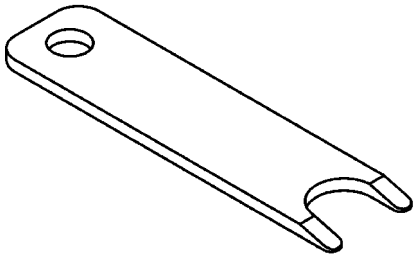

Disconnect Tool 6638A

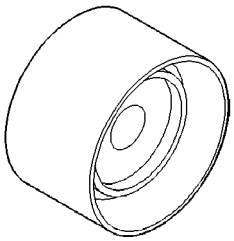

Installer L-4410

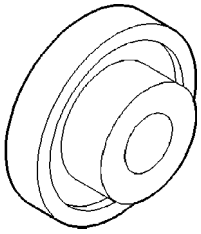

Seal Installer 6709

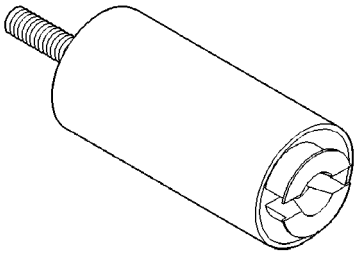

Special Jaw Set L-4518

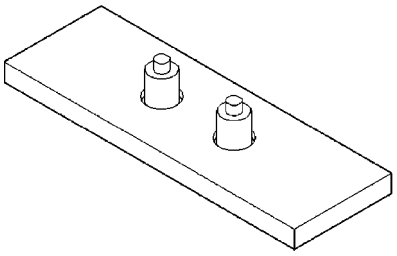

Bearing Remover 6768

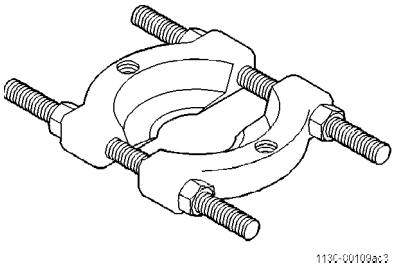

Bearing Splitter 1130

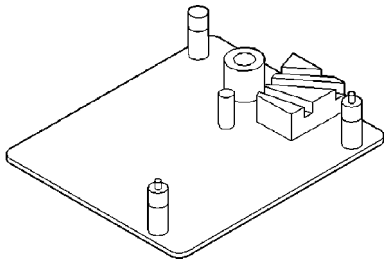

Bench Fixture 6785

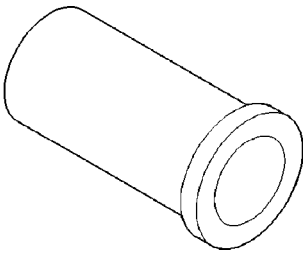

Driver 6342

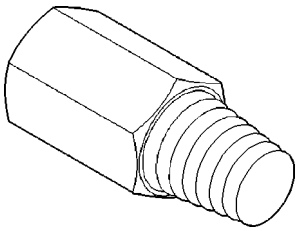

Remover 6786

T350 MANUAL TRANSAXLE (Continued)

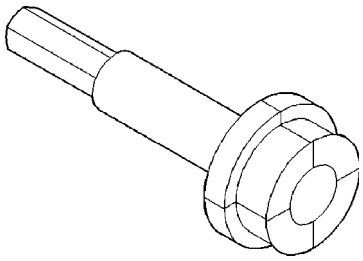

Remover 6787

AXLE SEAL

REMOVAL

(1) Remove axle shaft. Refer to Group 3, Differential and Driveline for the correct procedures.

(2) Insert a flat–blade pry tool at outer edge of axle shaft seal (Fig. 67) .

(3) Tap on the pry tool with a small hammer and remove axle shaft seal.

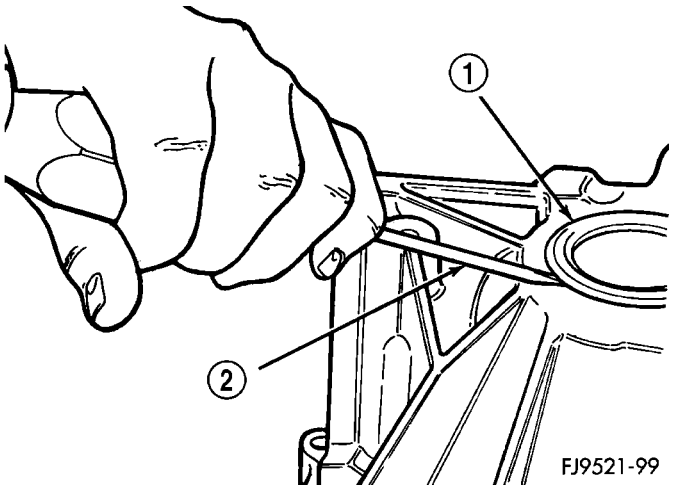

Fig. 67 Axle Shaft Seal Removal

1 - AXLE SEAL
2 - PRY TOOL

INSTALLATION

(1) Clean axle shaft seal bore of any excess sealant.

(2) Align axle shaft seal with axle shaft seal bore.

(3) Install axle seal on tool #6709 and C-4171 and insert into axle shaft seal bore.

(4) Tap seal into position until seated against transaxle case.

(5) Install axle shaft. Refer to Group 3, Differential and Driveline for the correct procedures.

BACK-UP LAMP SWITCH

REMOVAL

(1) Lift vehicle on hoist.

(2) From bottom side of vehicle, disconnect back-up lamp switch connector (Fig. 68).

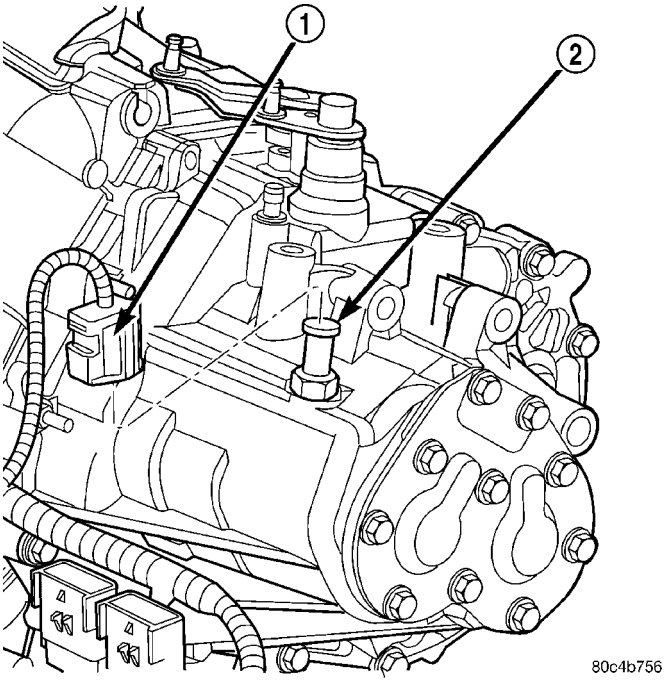

Fig. 68 BACK-UP LAMP SWITCH

1 - CONNECTOR
2 - BACK UP LAMP SWITCH

(3) Unscrew switch from transaxle.

INSTALLATION

(1) Install back-up lamp switch. Teflon tape or equivalent must be used on switch threads. Tighten switch to 24 N·m (18 ft. lbs.) torque.

CAUTION: Do not overtighten switch.

(2) Connect back-up lamp switch connector (Fig. 68) .

(3) Lower vehicle.

(4) Verify back-up lamp operation.

DIFFERENTIAL

DISASSEMBLY

(1) Remove differential bearing cones (ring gear and diff. case side) using Tool C-293-PA, Adapters C-293-45, and Tool 4996 (Fig. 69) (Fig. 70).

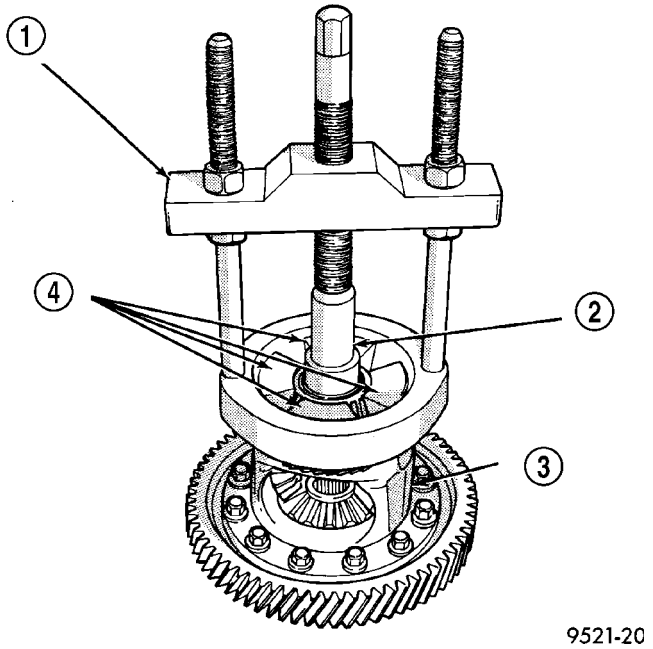

Fig. 69 Remove Differential Bearing Cone from Diff. Case Side

1 - SPECIAL TOOL C-293-PA
2 - SPECIAL TOOL C-4996
3 - DIFFERENTIAL ASSEMBLY
4 - SPECIAL TOOL C-293-45

(2) Remove ring gear-to-case bolts (Fig. 71). **Discard and use NEW bolts upon assembly.**

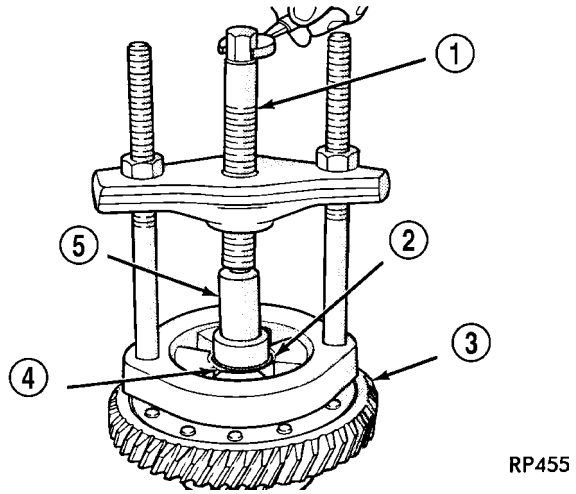

Fig. 70 Remove Differential Bearing Cone from Ring Gear Side

1 - SPECIAL TOOL C-293
2 - SPECIAL TOOL ADAPTER C-293-45 (USE 4 PIECES)
3 - DIFFERENTIAL ASSEMBLY
4 - DIFFERENTIAL BEARING CONE
5 - SPECIAL TOOL C-4996 (NOTE POSITION)

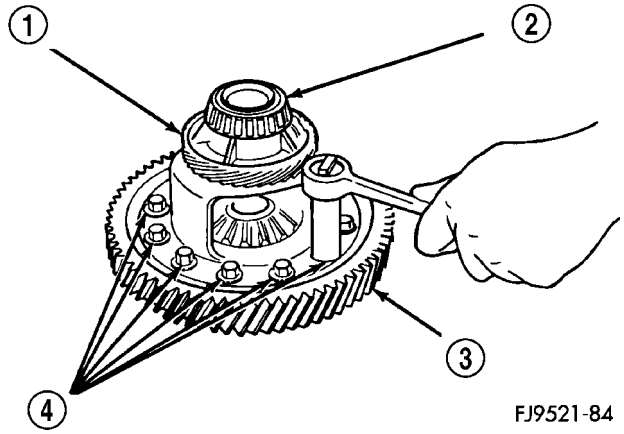

Fig. 71 Remove Ring Gear Bolts and Ring Gear

1 - SPEEDOMETER DRIVE GEAR
2 - BEARING
3 - RING GEAR
4 - RING GEAR BOLTS

DIFFERENTIAL (Continued)

(3) Using a suitable screwdriver, pry off speedometer drive gear (Fig. 72) (Fig. 73).

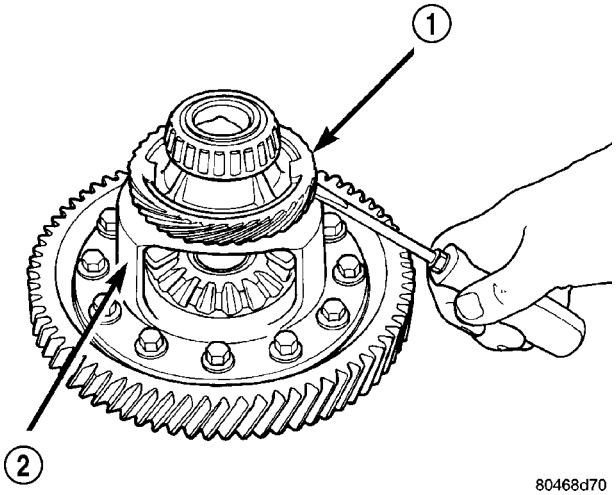

Fig. 72 Pry Off Speedometer Drive Gear

1 - SPEEDOMETER DRIVE GEAR
2 - DIFFERENTIAL ASSEMBLY

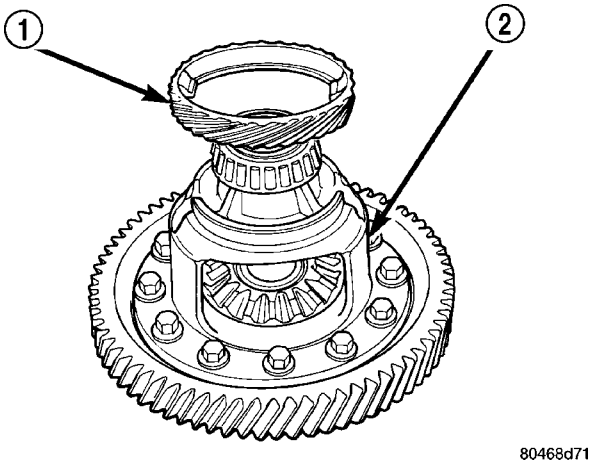

Fig. 73 Speedometer Drive Gear Removed

1 - SPEEDOMETER DRIVE GEAR
2 - DIFFERENTIAL ASSEMBLY

(4) Using hammer and suitable punch, remove pinion shaft retaining pin (Fig. 74) (Fig. 75).

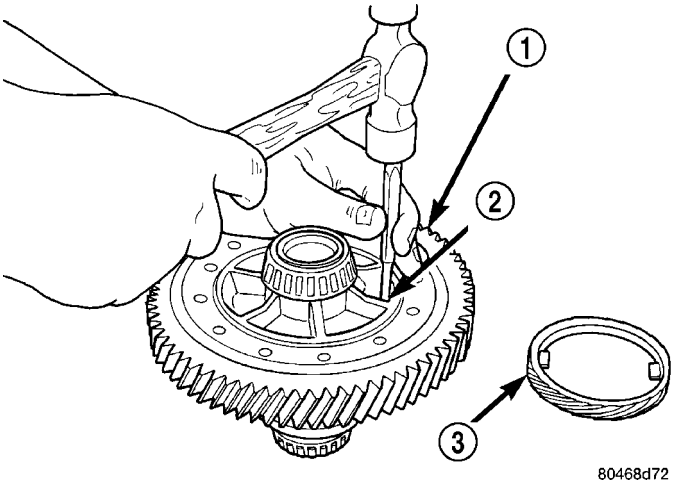

Fig. 74 Remove Pinion Shaft Retaining Pin

1 - RING GEAR
2 - PINION SHAFT RETAINING PIN
3 - SPEEDOMETER DRIVE GEAR

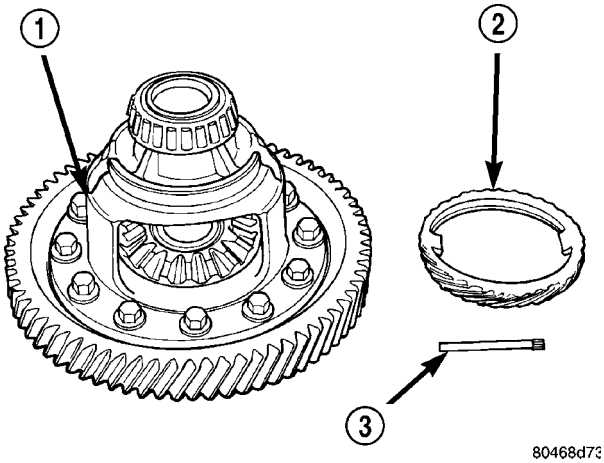

Fig. 75 Retaining Pin Removed

1 - DIFFERENTIAL ASSEMBLY
2 - SPEEDOMETER DRIVE GEAR
3 - PINION SHAFT RETAINING PIN

DIFFERENTIAL (Continued)

(5) Remove pinion shaft (Fig. 76).

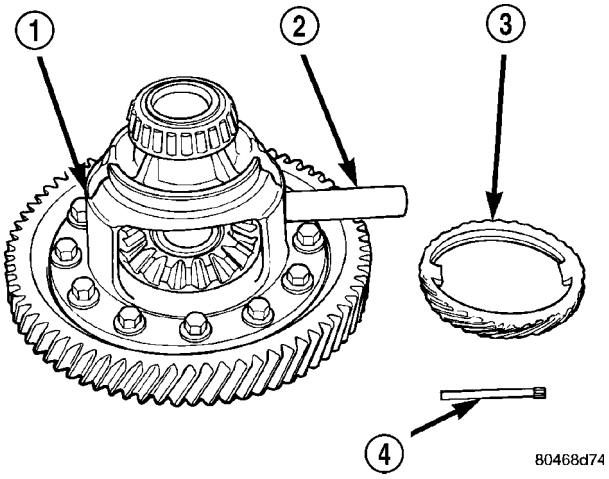

Fig. 76 Pinion Shaft Removal

1 - DIFFERENTIAL ASSEMBLY
2 - PINION SHAFT
3 - SPEEDOMETER DRIVE GEAR
4 - PINION SHAFT RETAINING PIN

(6) Remove pinion gears, side gears, and thrust washers (Fig. 77) (Fig. 78).

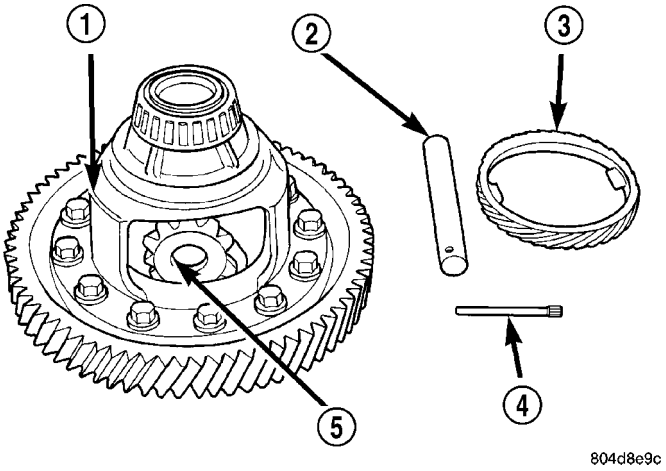

Fig. 77 Remove Pinion Gears, Side Gears, and Thrust Washers

1 - DIFFERENTIAL ASSEMBLY
2 - PINION SHAFT
3 - SPEEDOMETER DRIVE GEAR
4 - PINION SHAFT RETAINING PIN
5 - PINION GEAR (2)

ASSEMBLY

(1) Assemble side gears, pinion gears, and thrust washers (Fig. 78) into case through opening and rotating into position (Fig. 77).

(2) Install pinion shaft (Fig. 76).

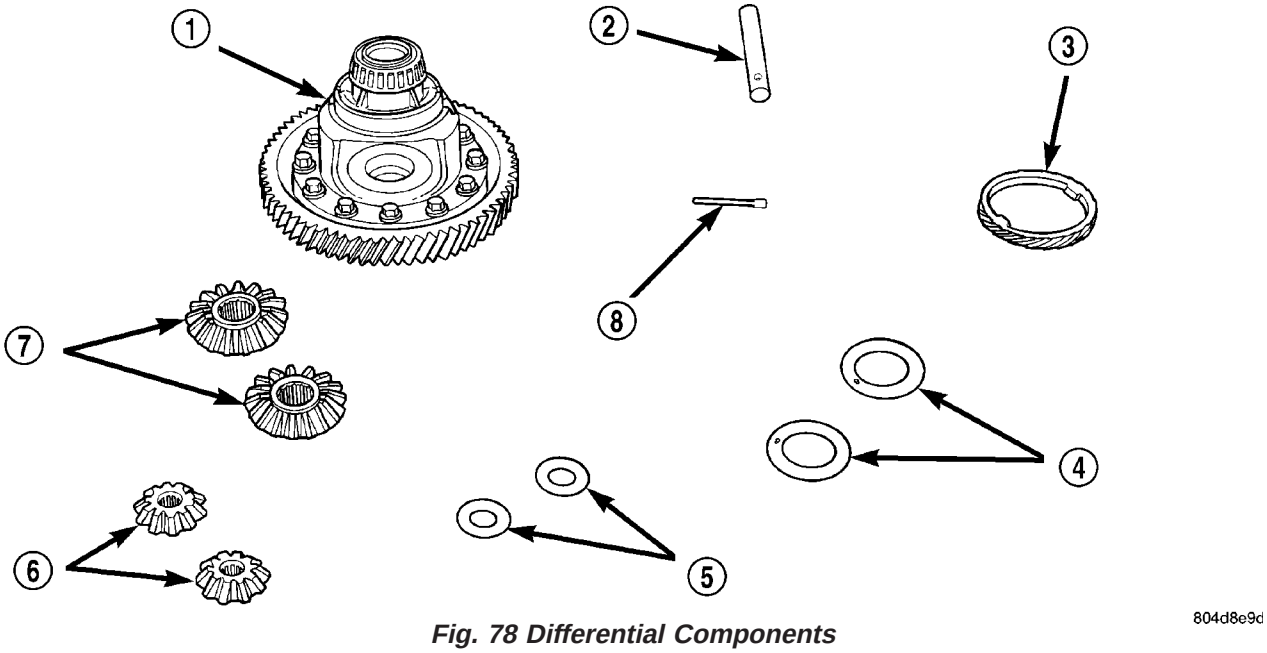

Fig. 78 Differential Components

1 - DIFFERENTIAL ASSEMBLY
2 - PINION SHAFT
3 - SPEEDOMETER DRIVE GEAR
4 - SIDE GEAR THRUST WASHERS (SELECT THICKNESS)
5 - PINION GEAR THRUST WASHERS
6 - PINION GEARS
7 - SIDE GEARS
8 - PINION SHAFT RETAINING PIN

DIFFERENTIAL (Continued)

(3) Using hammer and suitable punch, install pinion shaft retaining pin (Fig. 79).

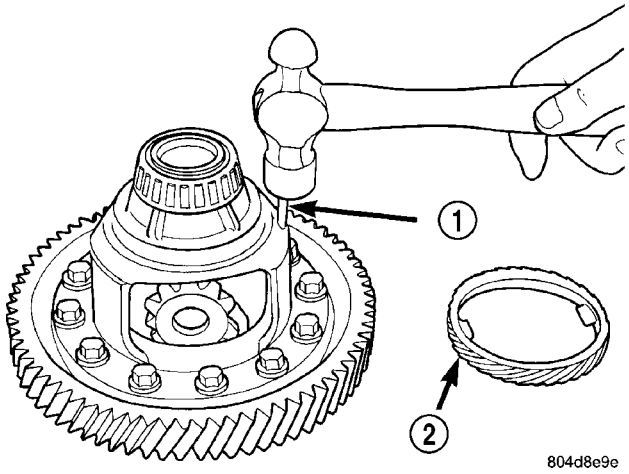

Fig. 79 Install Retaining Pin

1 - PINION SHAFT RETAINING PIN
2 - SPEEDOMETER DRIVE GEAR

(4) Stake case to retain pin as shown in (Fig. 80).

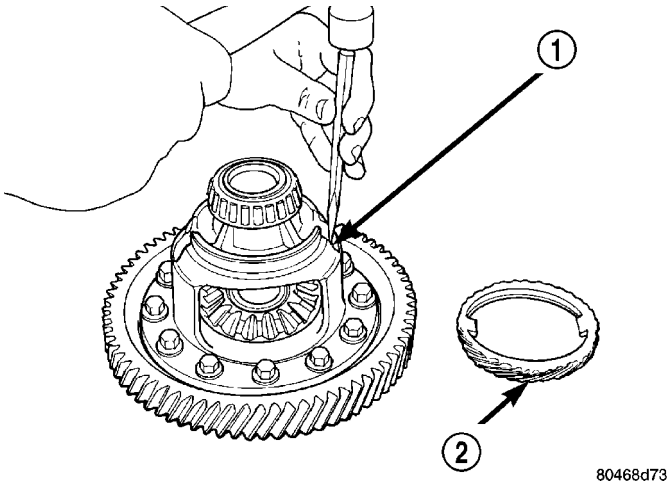

Fig. 80 Staking Retaining Pin

1 - PINION SHAFT RETAINING PIN
2 - SPEEDOMETER DRIVE GEAR

(5) Using an arbor press, Handle C-4171, and Tool L-4410, install differential side bearings to ring gear and case side (Fig. 81) (Fig. 82).

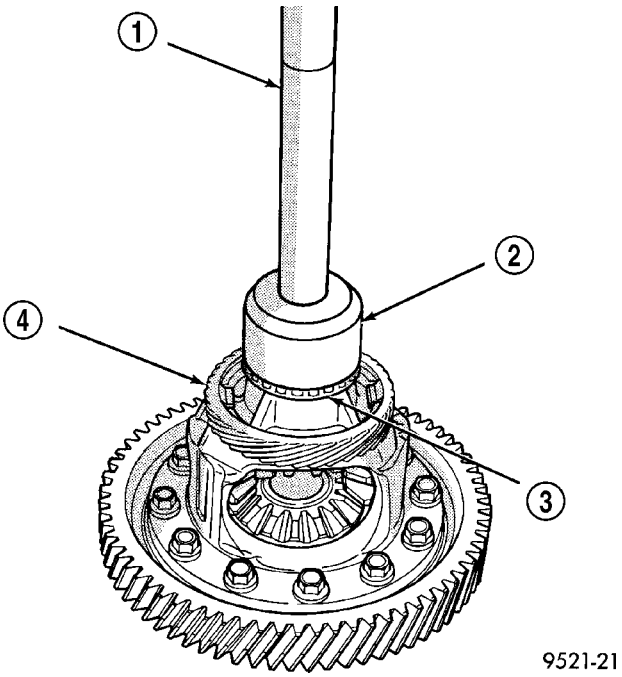

Fig. 81 Install Differential Bearing Cone to Diff. Case Side

1 - SPECIAL TOOL C-4171
2 - SPECIAL TOOL L-4410
3 - BEARING CONE
4 - SPEED SENSOR DRIVE GEAR

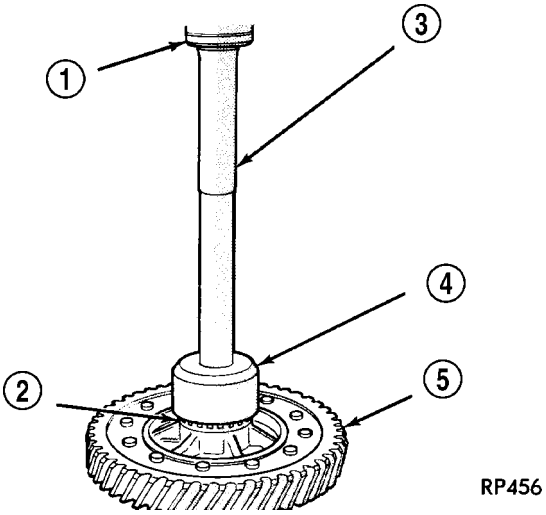

Fig. 82 Install Differential Bearing Cone to Ring Gear Side

1 - ARBOR PRESS RAM
2 - BEARING CONE
3 - SPECIAL TOOL HANDLE C-4171
4 - SPECIAL TOOL L-4410
5 - DIFFERENTIAL ASSEMBLY

DIFFERENTIAL (Continued)

(6) Install speedometer drive gear to case (Fig. 83).

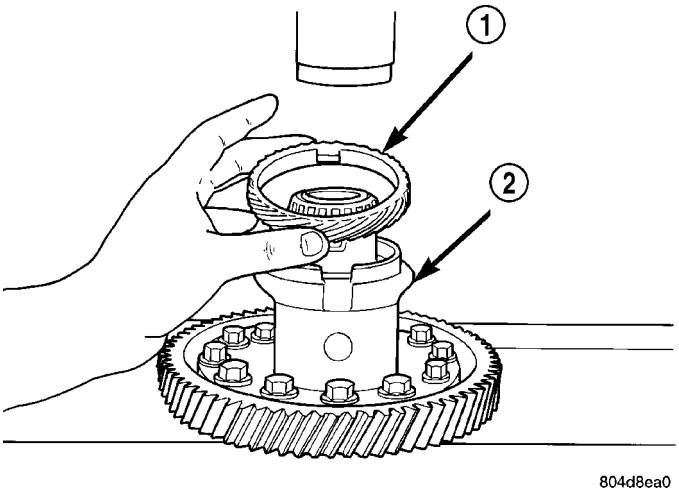

Fig. 83 Speedometer Drive Gear

1 - SPEEDOMETER DRIVE GEAR
2 - DIFFERENTIAL ASSEMBLY

(7) Using an arbor press, steel block, and Tool L-4440, press speedometer drive gear onto differential case (Fig. 84) (Fig. 85).

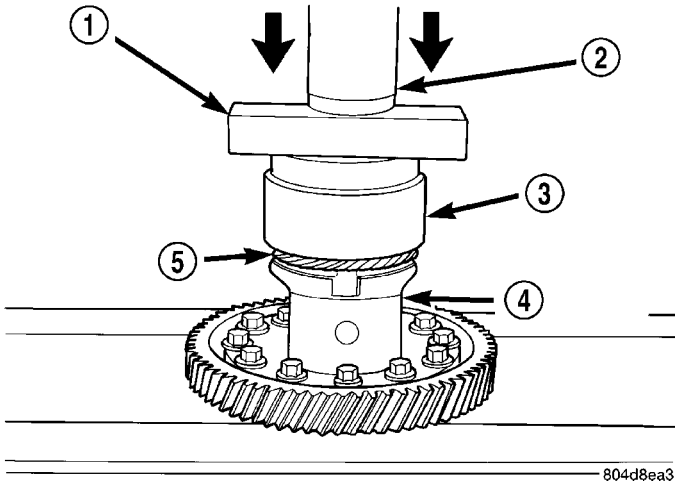

Fig. 84 Press Gear onto Differential

1 - STEEL STOCK
2 - PRESS RAM
3 - SPECIAL TOOL L-4440
4 - DIFFERENTIAL ASSEMBLY
5 - SPEEDOMETER DRIVE GEAR

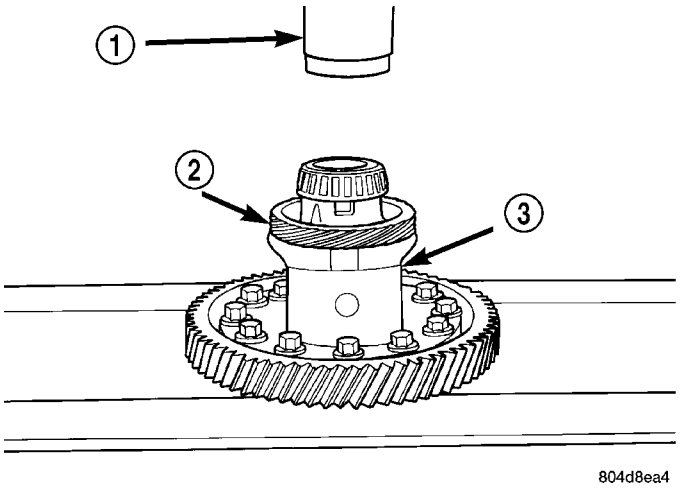

Fig. 85 Drive Gear Pressed onto Differential

1 - PRESS RAM
2 - SPEEDOMETER DRIVE GEAR
3 - DIFFERENTIAL ASSEMBLY

(8) Install ring gear to differential case. Install new bolts and torque to 81 N·m (60 ft. lbs.) torque (Fig. 86).

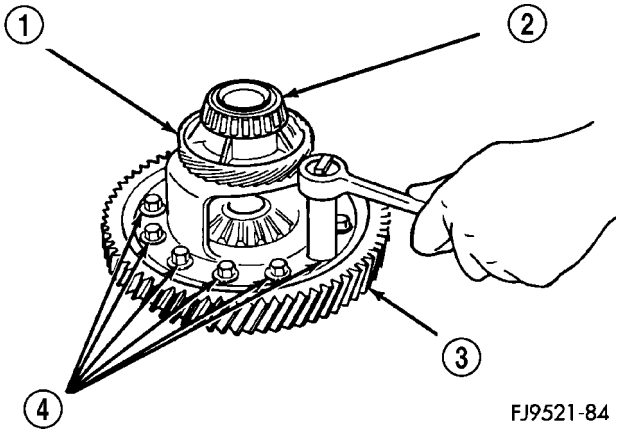

Fig. 86 Install Ring Gear and Bolts

1 - SPEEDOMETER DRIVE GEAR
2 - BEARING
3 - RING GEAR
4 - RING GEAR BOLTS

DIFFERENTIAL (Continued)

Measure and Adjust Side Gear End-Play

(1) Rotate the assembly two full revolutions both clockwise and counterclockwise.Set up dial indicator as shown and record end play (Fig. 87) (Fig. 88). Rotate side gear 90 degrees and take another measurement. Again, rotate side gear 90 degrees and record a final measurement.

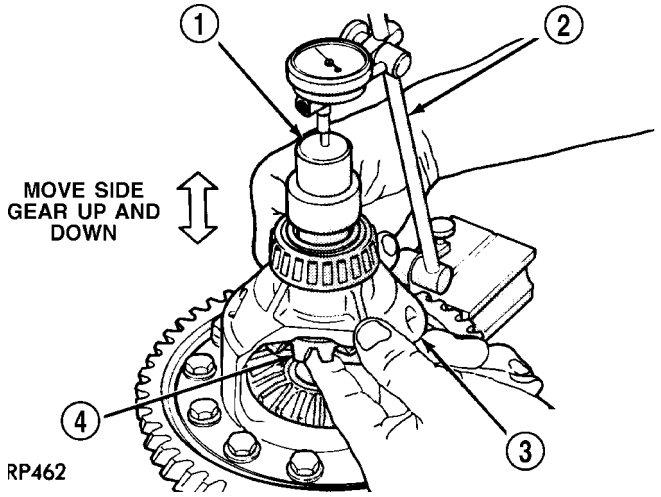

Fig. 87 Checking Side Gear End Play (Typical)

1 - SPECIAL TOOL C-4996 (NOTE POSITION)
2 - DIAL INDICATOR SET
3 - DIFFERENTIAL ASSEMBLY
4 - SIDE GEAR

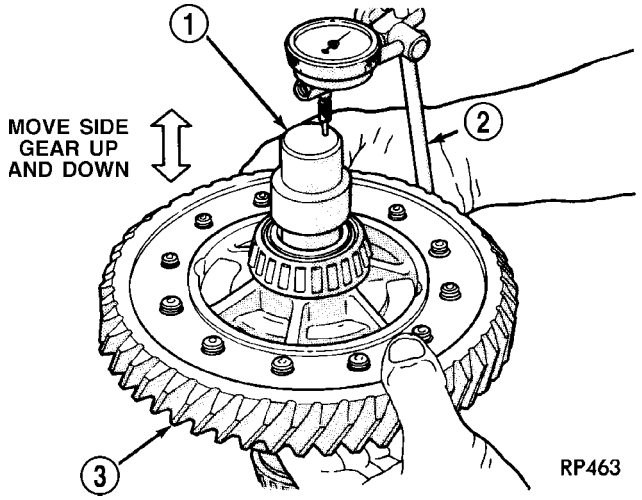

Fig. 88 Checking Side Gear End Play—Typical

1 - SPECIAL TOOL C-4996 (NOTE POSITION)
2 - DIAL INDICATOR SET
3 - DIFFERENTIAL ASSEMBLY

(2) Using the smallest end play recorded, shim that side gear to within 0.001 to 0.013 inch. The other side gear should be checked using the same procedure.

CAUTION: Side gear end play must be within 0.001 to 0.013 inch. Five select thrust washers are available: 0.027, 0.032, 0.037, 0.042, and 0.047 inch.

ADJUSTMENTS

DIFFERENTIAL BEARING PRELOAD ADJUSTMENT / SHIM SELECTION

Measure and adjust differential side bearing preload during any transaxle service, especially when the following components are replaced:

- Transaxle gear case
- Clutch bellhousing case
- Differential case
- Differential bearings

NOTE: True bearing turning torque readings can be obtained only with the geartrain removed from the case.

(1) Remove bearing cup and existing shim from clutch bellhousing case.

(2) Press in new bearing cup into bellhousing case (or use a cup that has been ground down on the outer edge for ease of measurement).

(3) Press in new bearing cup into gear case side.

(4) Oil differential bearings with transmission fluid. Install differential assembly in transaxle gear case. Install clutch bellhousing over gear case. Install and torque case bolts to 29 N·m (21 ft. lbs.).

(5) Position transaxle with bellhousing facing down on workbench with C-clamps. Position dial indicator.

NOTE: Indicator is set up as shown for illustrative purposes only (Fig. 89). Indicator must be parallel to T-Handle to obtain the most accurate reading.

(6) Apply a medium load to differential with Tool C-4995 and a T-handle, in the downward direction. Roll differential assembly back and forth a number of times. This will settle the bearings. Zero the dial indicator. To obtain end play readings, apply a medium load in an upward direction while rolling differential assembly back and forth (Fig. 89). Record end play.

(7) The shim required for proper bearing preload is the **total of end play, plus (constant) preload of 0.18 mm (0.007 in.).** Never combine shims to obtain the required preload.

(8) Remove case bolts. Remove clutch bellhousing differential bearing cup. Install shim(s) selected in Step 7. Then press the bearing cup into clutch bellhousing.

DIFFERENTIAL (Continued)

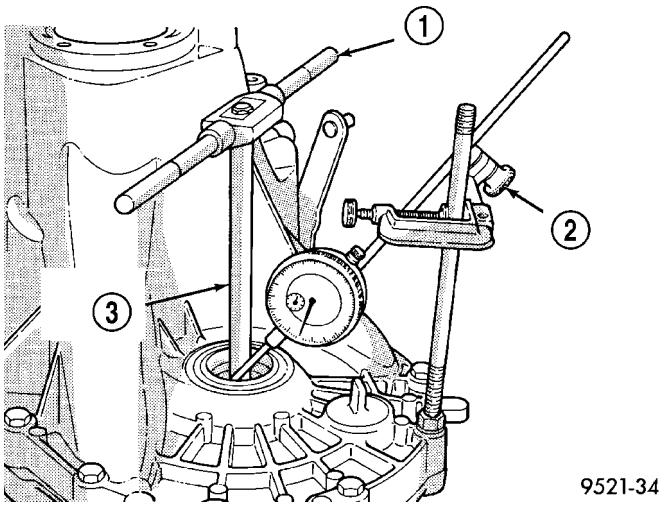

Fig. 89 Checking Differential Bearing End Play to Determine Shim Thickness

1 - T-HANDLE
2 - DIAL INDICATOR SET
3 - SPECIAL TOOL C-4995

(9) Install clutch bellhousing. Install and torque case bolts to 26 N·m (19 ft. lbs.).

(10) Using Special Tool C-4995 and an inch-pound torque wrench, check turning torque of the differential assembly (Fig. 90). **The turning torque should be 6 to 12 in. lbs. If the turning torque is too high, install a 0.05 mm (0.002 inch) thinner shim. If the turning torque is too low, install a 0.05mm (0.002 inch) thicker shim.**

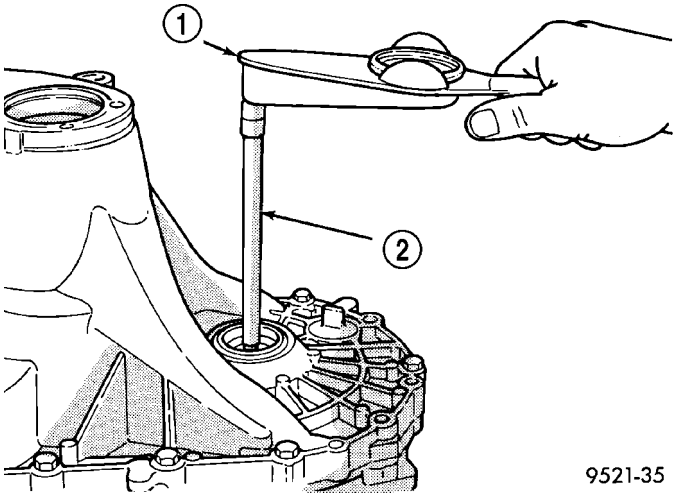

Fig. 90 Checking Differential Bearing Turning Torque

1 - INCH-POUND TORQUE WRENCH
2 - SPECIAL TOOL C-4995

(11) Recheck turning torque. Repeat Step 10 until the proper turning torque is obtained.

DIFFERENTIAL BEARING CUPS

REMOVAL

(1) Remove differential assembly from gear case using the procedure outlined in this group.

(2) Install Miller tool #L-4518 into the differential bearing cup (Fig. 91).

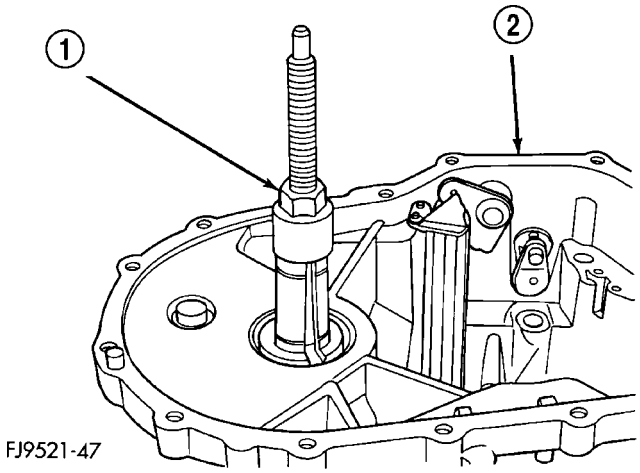

Fig. 91 Tool Installed in Bearing

1 - SPECIAL TOOL L-4518
2 - GEAR CASE

(3) Install the tool cup over the tool (Fig. 92).

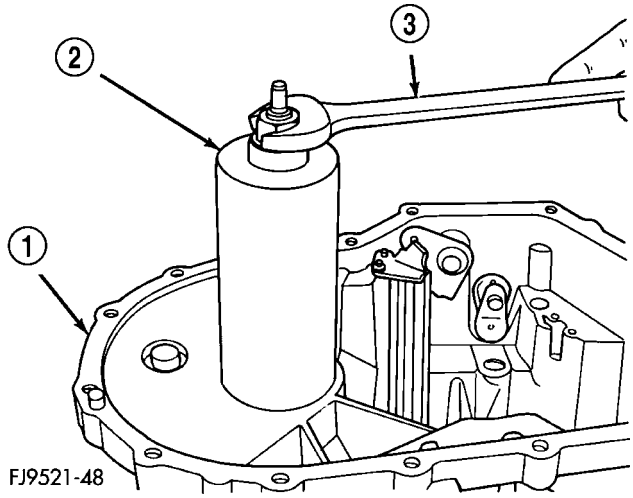

Fig. 92 Tool Cup Installed

1 - GEAR CASE
2 - SPECIAL TOOL L-4518
3 - WRENCH

(4) Tighten the tool until the race is removed from the case.

DIFFERENTIAL BEARING CUPS (Continued)

INSTALLATION

(1) Position the bearing cup into the case.

(2) Install the bearing cup onto Miller tool #L-4520.

(3) Using Miller tool #L-4520 and C-4171 driver, install differential bearing cup into the transaxle case.

FLUID

STANDARD PROCEDURE - FLUID DRAIN AND FILL

NOTE: All T350 Manual Transaxles require the use of ATF+4 (Automatic Transmission Fluid).

The transaxle fill plug is located on the left side of the transaxle differential area (Fig. 93). The fluid level should be within 3/16 inch from the bottom of the transaxle fill hole (vehicle must be level when checking).

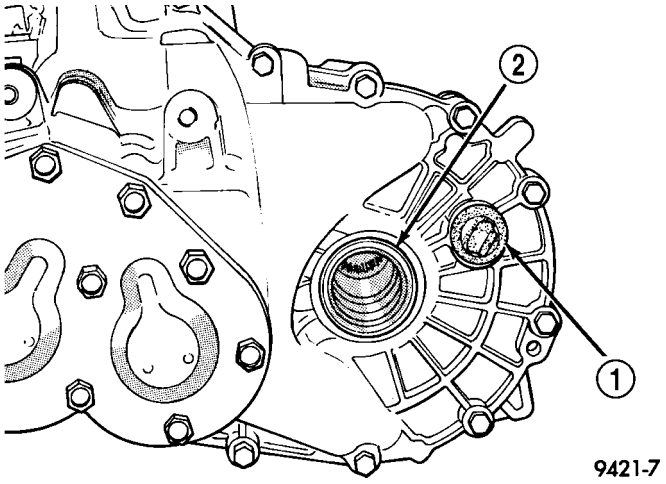

Fig. 93 Fill Plug Location

1 - RUBBER FILL PLUG
2 - LEFT DRIVESHAFT SEAL

The transaxle drain plug is located on the lower right side of the transaxle differential housing (Fig. 94). Tighten drain plug to 28 N·m (250 in. lbs.)

Fill transaxle to capacity with suitable amount of ATF+4. Refer to following chart. Wipe the outside of the transaxle if any lubricant spills.

NV T350 MANUAL TRANSAXLE FLUID FILL

TRANSAXLE	METRIC MEASURE	U.S. MEASURE
NV T350	2.4-2.7 Liters	2.5-2.8 Quarts

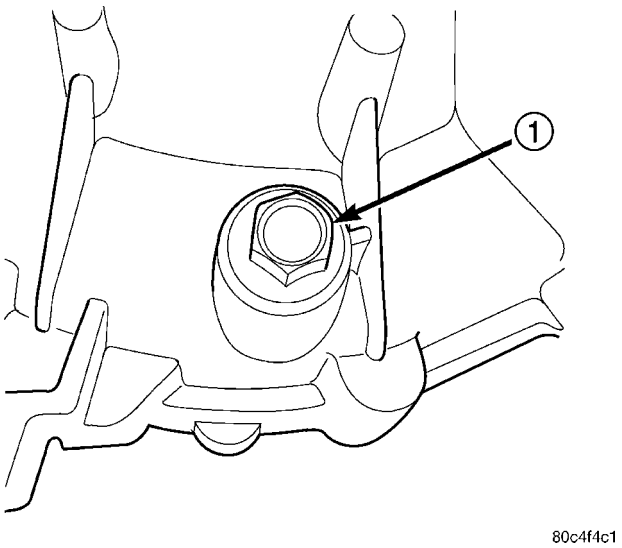

Fig. 94 Drain Plug Location

1 - DRAIN PLUG

GEAR SHIFT BOOT

REMOVAL

(1) Pull up on gearshift knob with moderate force to remove from gearshift mechanism (Fig. 95) .

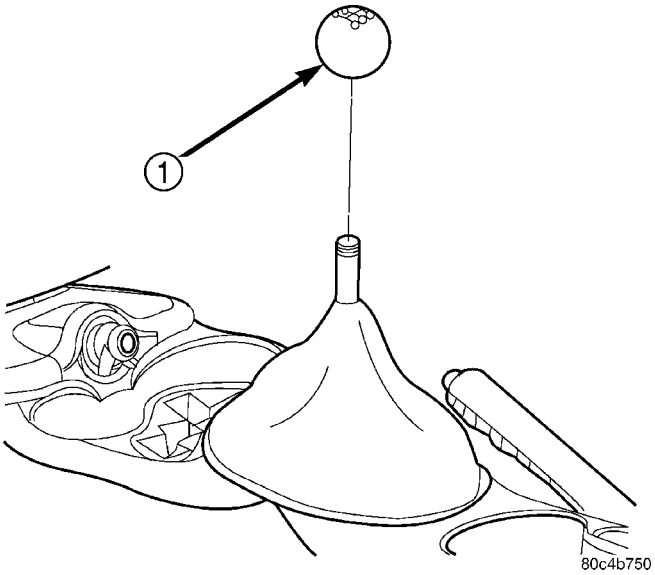

Fig. 95 Gearshift Knob Removal/Installation

1 - GEARSHIFT KNOB

(2) Remove shifter boot/bezel assembly from console by lifting up at mounting ring area (Fig. 96) .

GEAR SHIFT BOOT (Continued)

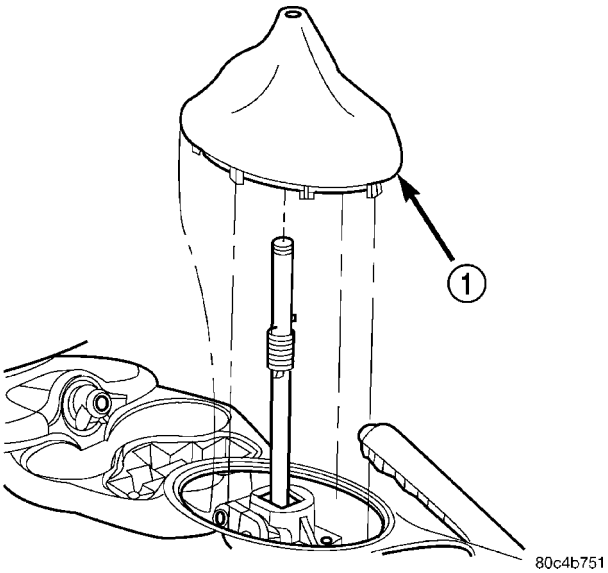

Fig. 96 Gearshift Boot Removal/Installation

1 - GEARSHIFT BOOT

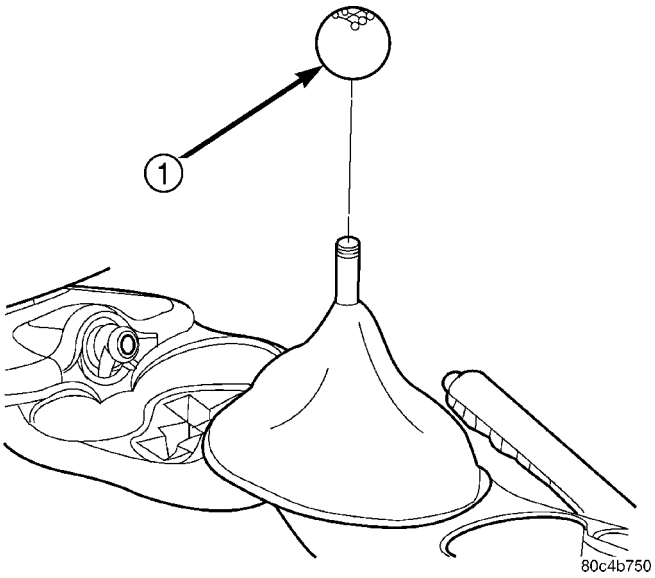

Fig. 97 Gearshift Knob Removal/Installation

1 - GEARSHIFT KNOB

INSTALLATION

(1) Position gearshift boot (Fig. 96) over the gearshift mechanism and engage tab on mount ring at front to opening in console. Apply hand pressure to engage bosses on mount ring of boot to console opening slots.

(2) Position gearshift knob hole over the gearshift mechanism (Fig. 95) and align the shift pattern.

(3) Strike knob with rubber mallet to engage knob to mechanism.

(4) Verify that shift pattern is aligned properly.

GEAR SHIFT CABLE

REMOVAL

NOTE: The crossover and selector cables are manufactured as a cable “assembly” and cannot be serviced individually.

(1) Pull up on gearshift knob with moderate force to remove from gearshift mechanism (Fig. 97).

(2) Remove shifter boot/bezel assembly from console by lifting up at mounting ring area (Fig. 98).

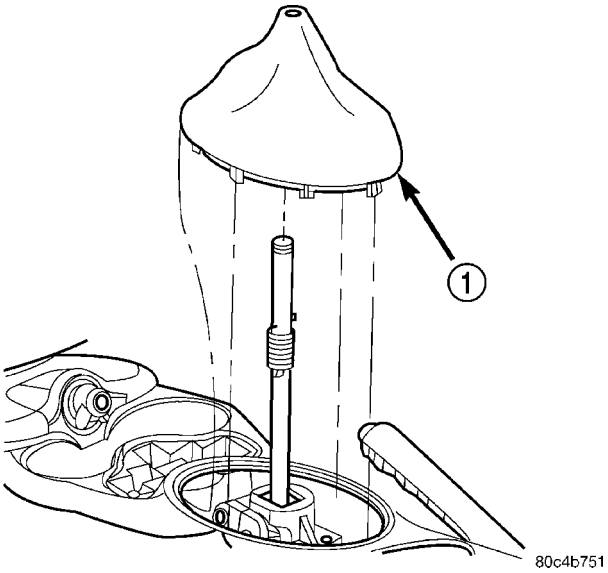

Fig. 98 Gearshift Boot

1 - GEARSHIFT BOOT

GEAR SHIFT CABLE (Continued)

(3) Remove the center console assembly as shown in (Fig. 99).

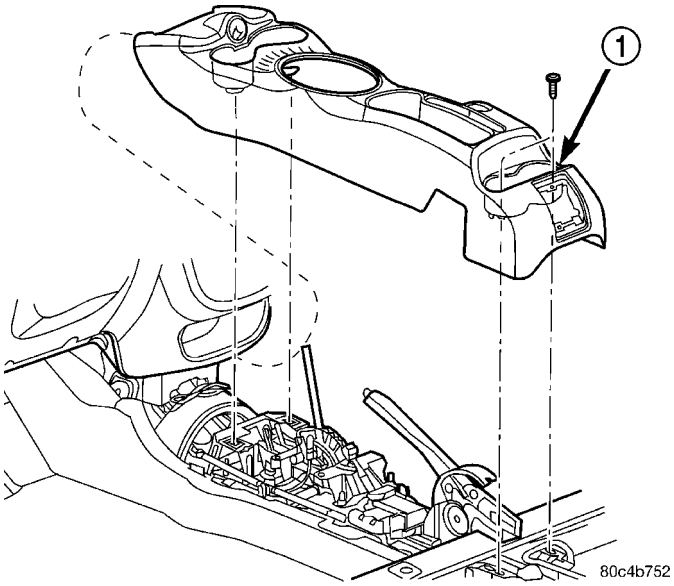

Fig. 99 Center Console Removal/Installation—Typical

1 - CENTER CONSOLE

(4) Remove crossover cable retaining clip and disconnect from shift lever (Fig. 100).

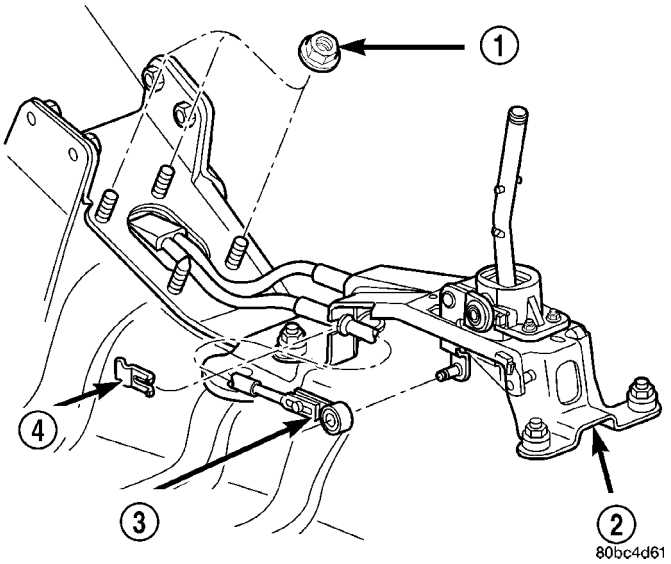

Fig. 100 Crossover Cable at Shifter Assembly

1 - GROMMET PLATE NUT
2 - SHIFTER
3 - CROSSOVER CABLE
4 - CLIP

(5) Remove selector cable retaining clip and disconnect from shift lever (Fig. 101).

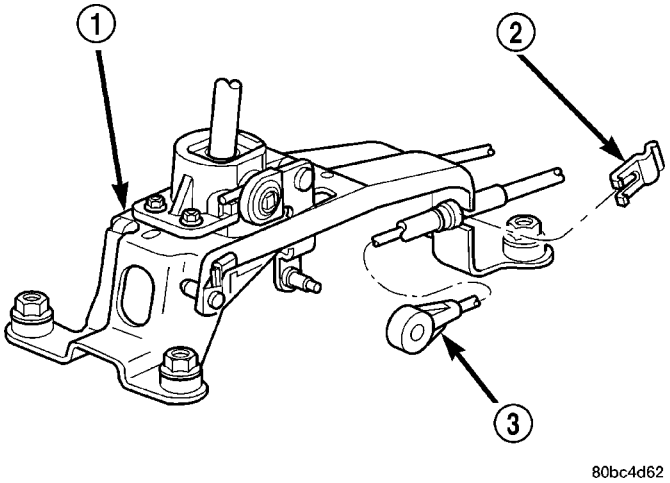

Fig. 101 Selector Cable at Shifter Assembly

1 - SHIFTER
2 - CLIP
3 - SELECTOR CABLE

(6) Remove three grommet plate-to-floor pan attaching nuts (Fig. 100).

(7) Remove air cleaner assy (Fig. 102).

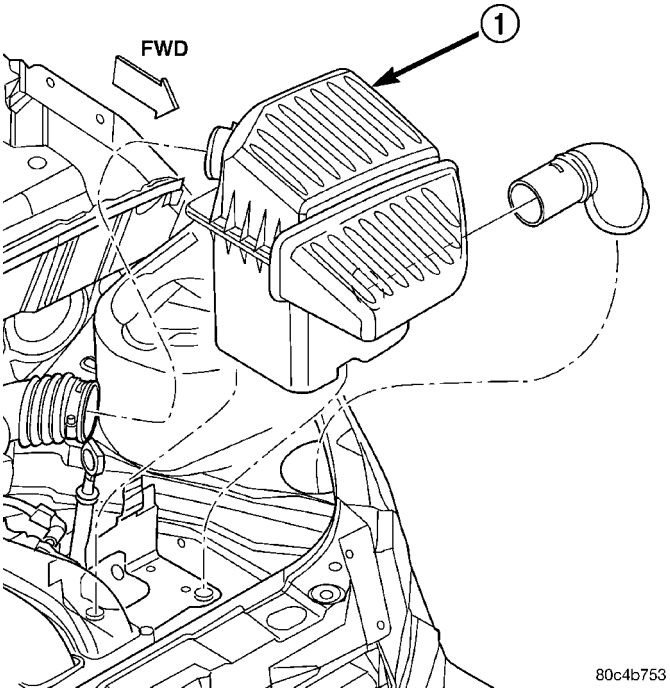

Fig. 102 Air Cleaner Assembly Removal/Installation

1 - AIR CLEANER ASSEMBLY

GEAR SHIFT CABLE (Continued)

(8) Disconnect battery cables.

(9) Remove battery hold-down clamp and battery (Fig. 103).

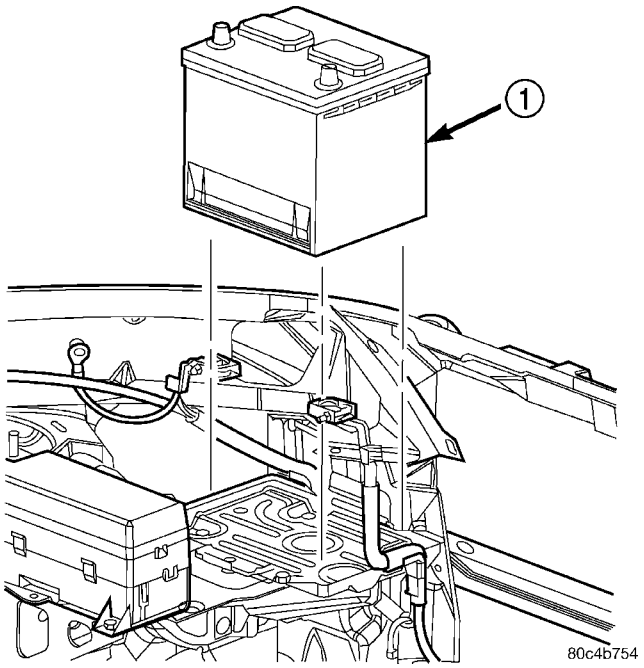

Fig. 103 Battery Removal/Installation

1 - BATTERY

(10) Remove battery tray (Fig. 104).

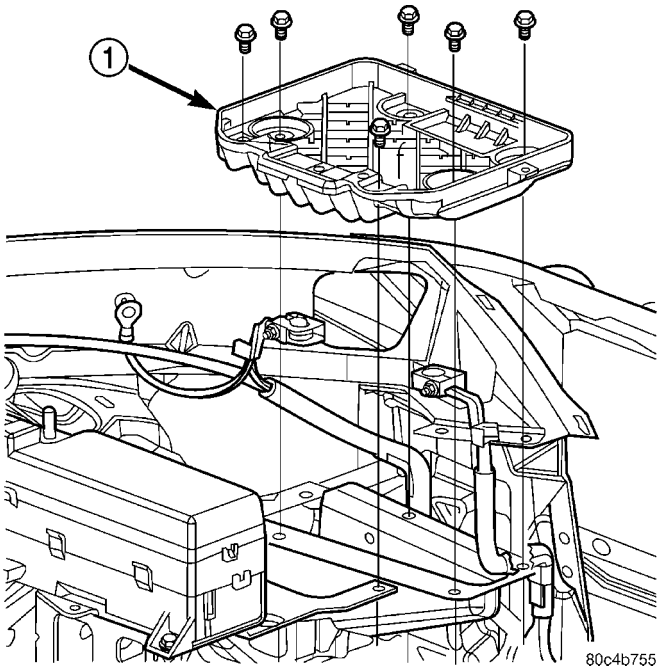

Fig. 104 Battery Tray Removal/Installation

1 - BATTERY TRAY

(11) Disconnect cables from the shift levers at the transaxle (Fig. 105).

CAUTION: Pry up with equal force on both sides of shifter cable isolator bushings to avoid damaging cable isolator bushings.

(12) Remove cable retaining clips and remove cables from bracket (Fig. 105).

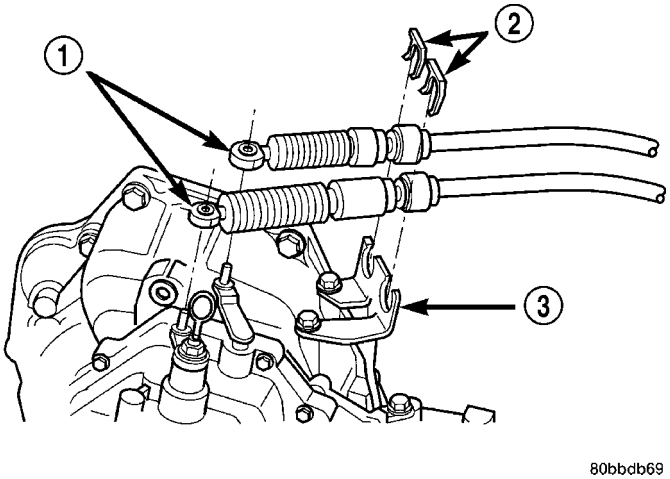

Fig. 105 Shift Cables at Transaxle

1 - SHIFT CABLES
2 - CLIPS
3 - BRACKET

(13) Raise vehicle on hoist.

(14) Remove converter heat shield (Fig. 106).

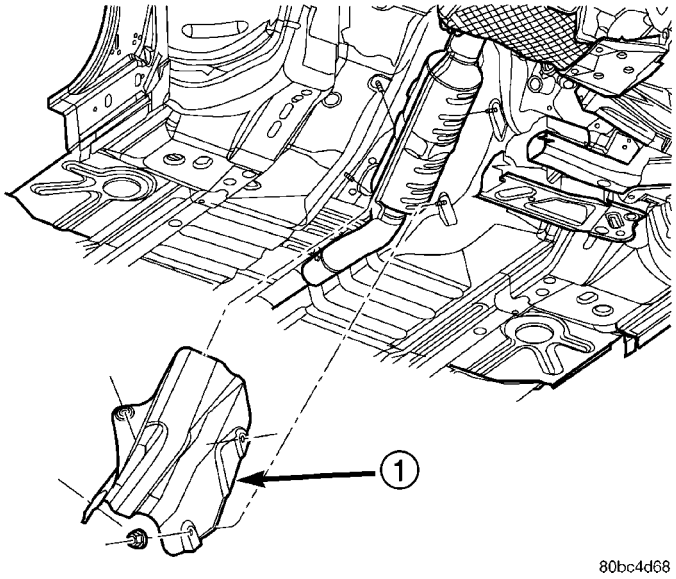

Fig. 106 Converter Heat Shield Removal/Installation

1 - CONVERTER HEAT SHIELD

GEAR SHIFT CABLE (Continued)

(15) Remove remaining grommet plate-to-floor pan screw (Fig. 107).

(16) Remove cable assembly from vehicle.

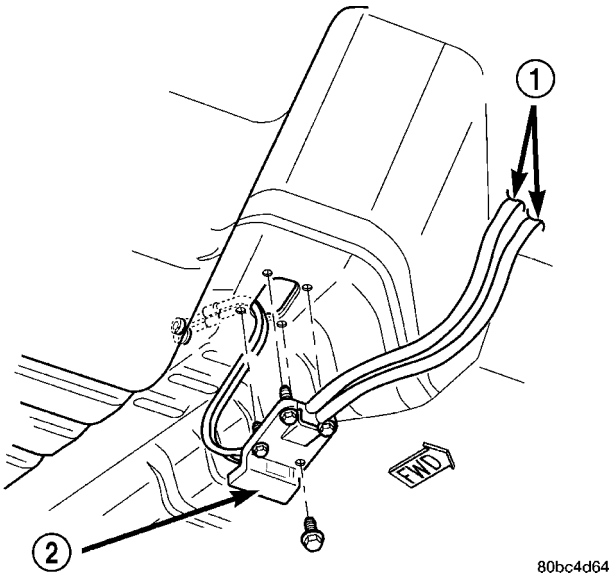

Fig. 107 Shift Cable Assembly at Floor Pan

1 - CABLE ASSEMBLY
2 - GROMMET PLATE

INSTALLATION

CAUTION: Gearshift cable bushings must not be lubricated or the bushings will swell and split.

(1) Raise vehicle on hoist.

(2) Install cable assembly through floor pan opening and secure to floor pan with grommet plate and one screw (Fig. 108). Make sure the three grommet plate studs protrude through cable assembly and floor pan and tighten screw to 7 N·m (60 in. lbs.).

(3) Route transaxle end of cable assembly into engine compartment and over transaxle assembly.

(4) Install converter heat shield (Fig. 109).

(5) Lower vehicle.

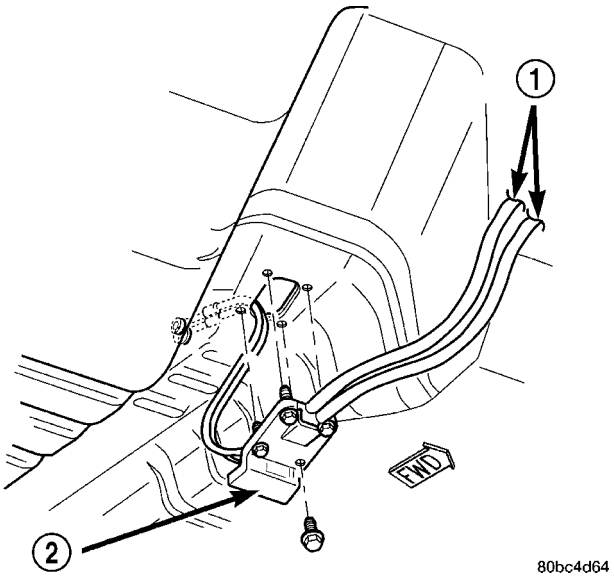

Fig. 108 Shift Cable Assembly at Floor Pan

1 - CABLE ASSEMBLY
2 - GROMMET PLATE

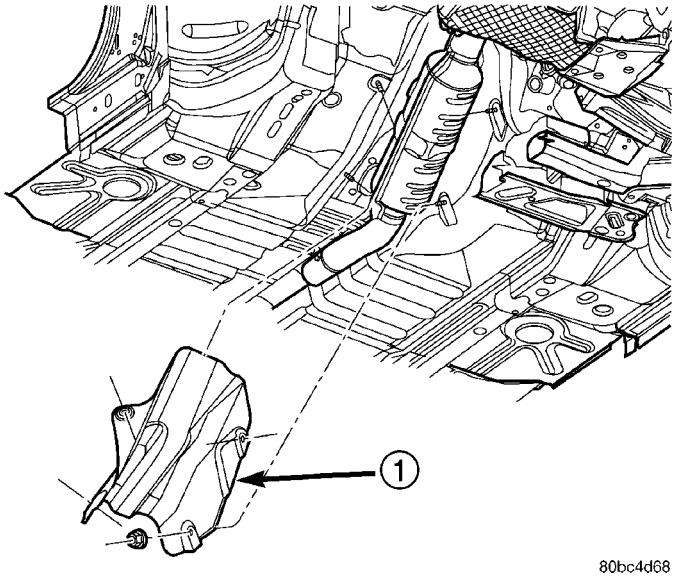

Fig. 109 Converter Heat Shield Removal/Installation

1 - CONVERTER HEAT SHIELD

GEAR SHIFT CABLE (Continued)

(6) Install gearshift cables to mounting bracket and fasten with NEW clips (Fig. 110). Make sure clips are installed flush to bracket.

(7) Connect gearshift selector and crossover cable to shift levers at transaxle (Fig. 110).

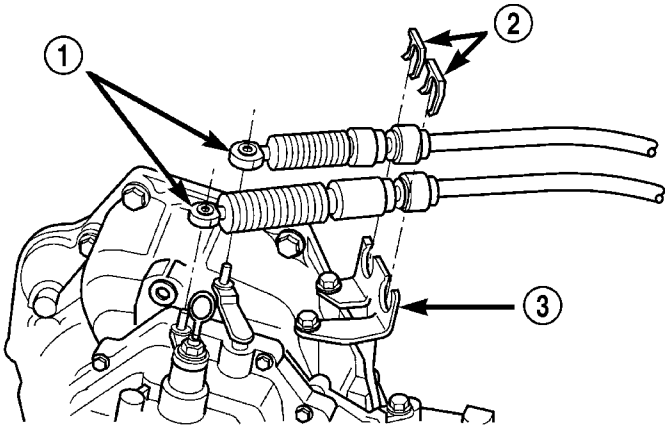

Fig. 110 Shift Cables at Transaxle

1 - SHIFT CABLES
2 - CLIPS
3 - BRACKET

(8) Install and tighten the three grommet plate-to-floor pan nuts to 6 N·m (50 in. lbs.) torque.

(9) Install selector cable to shifter lever and secure cable to shifter bracket. Install clip (Fig. 111).

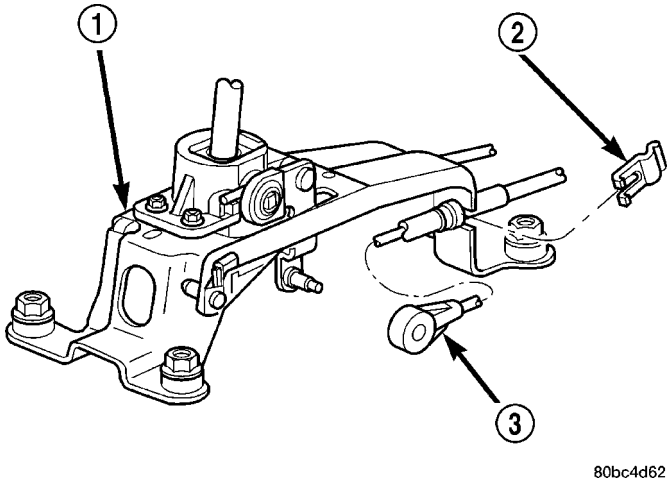

Fig. 111 Selector Cable at Shifter Assembly

1 - SHIFTER
2 - CLIP
3 - SELECTOR CABLE

(10) Install crossover cable to shifter lever and secure cable to shifter bracket. Install clip (Fig. 112).

NOTE: Only the crossover cable is adjustable. The selector cable does not have any adjustment capabilities.

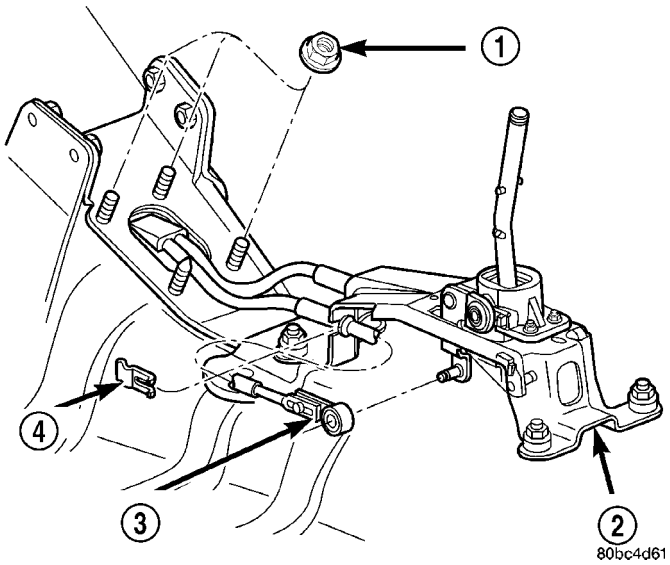

Fig. 112 Crossover Cable at Shifter Assembly

1 - GROMMET PLATE NUT
2 - SHIFTER
3 - CROSSOVER CABLE
4 - CLIP

(11) **Adjust crossover cable as follows:**

(a) Loosen adjusting screw on crossover cable at shifter (Fig. 113).

(b) The gearshift mechanism and transaxle crossover lever are spring-loaded and self-centering. Alignment pins used in the past are not required anymore. Allow gearshift mechanism and transaxle crossover lever to relax in their neutral positions. To ensure the gearshift lever is in the proper position, place the shifter in 3rd or 4th gear if necessary. Torque adjustment screw to 8 N·m (70 in. lbs.). Care must be taken to avoid moving the shift mechanism off-center during screw tightening.

(c) Perform functional check by shifting transaxle into all gears.

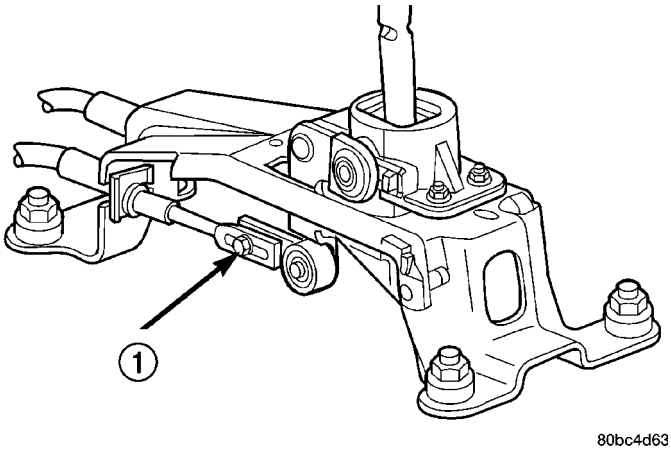

Fig. 113 Crossover Cable Adjustment Screw

1 - CROSSOVER ADJUSTMENT SCREW

GEAR SHIFT CABLE (Continued)

(12) Install center console assembly (Fig. 114). Verify that boot is not pinched at console opening before tightening.

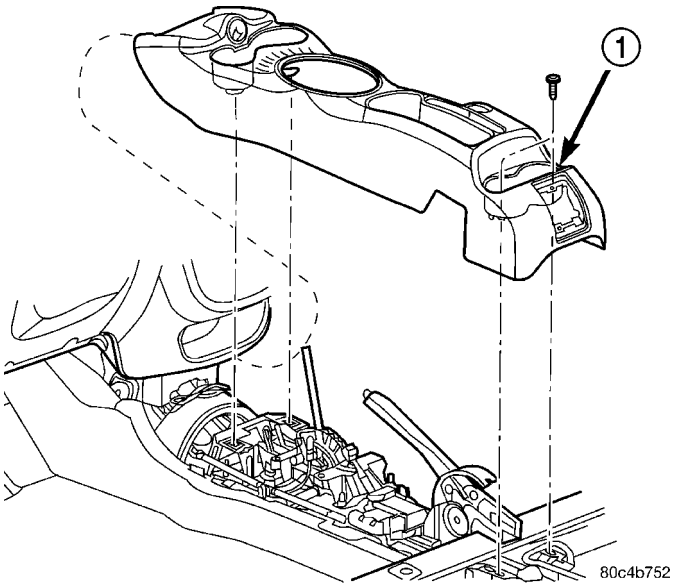

Fig. 114 Center Console Removal/Installation - Typical

1 - CENTER CONSOLE

(13) Position gearshift boot (Fig. 115) over the gearshift mechanism and engage tab on mount ring at front to opening in console. Apply hand pressure to engage bosses on mount ring of boot to console opening slots.

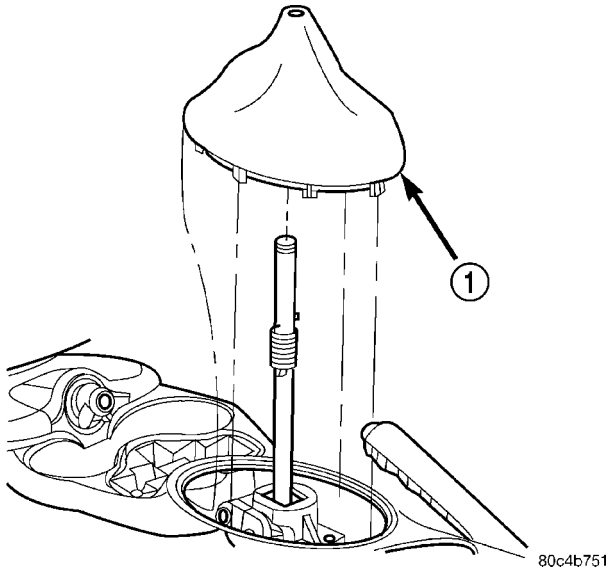

Fig. 115 Gearshift Boot

1 - GEARSHIFT BOOT

(14) Position gearshift knob hole over the gearshift mechanism (Fig. 116) and align the shift pattern.

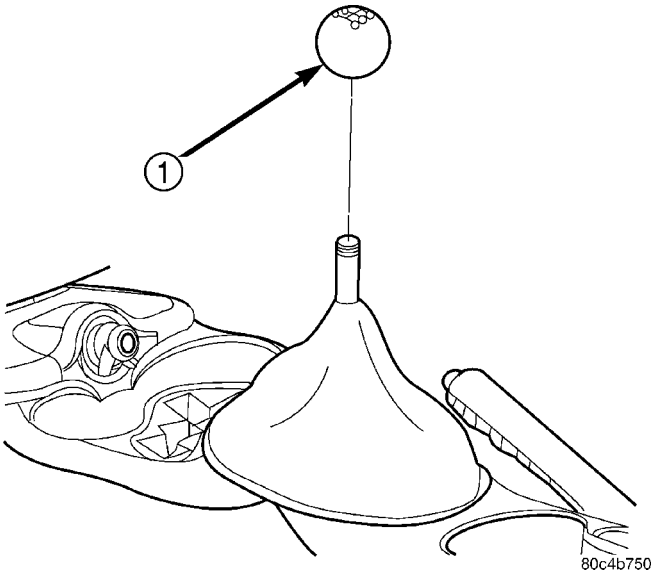

Fig. 116 Gearshift Knob Removal/Installation

1 - GEARSHIFT KNOB

(15) Strike knob with rubber mallet to engage knob to mechanism.

(16) Verify that shift pattern is aligned properly.

(17) Install battery tray (Fig. 117).

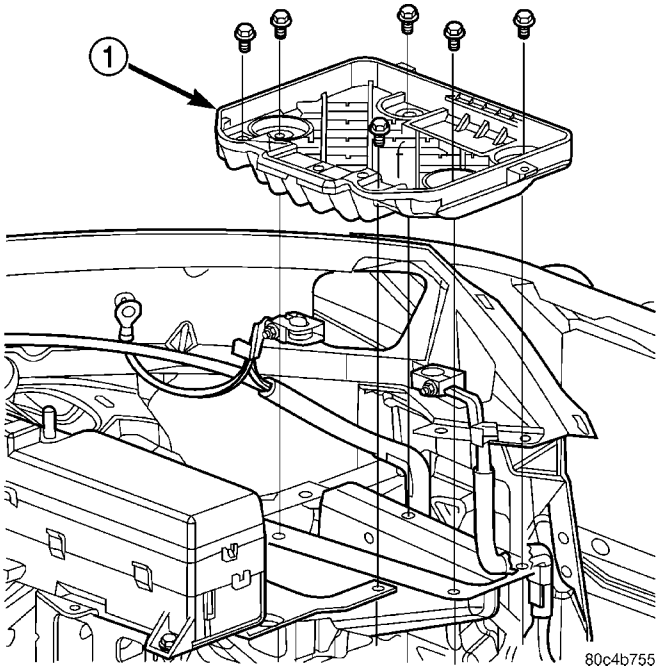

Fig. 117 Battery Tray Removal/Installation

1 - BATTERY TRAY

GEAR SHIFT CABLE (Continued)

(18) Install battery and hold-down clamp (Fig. 118).

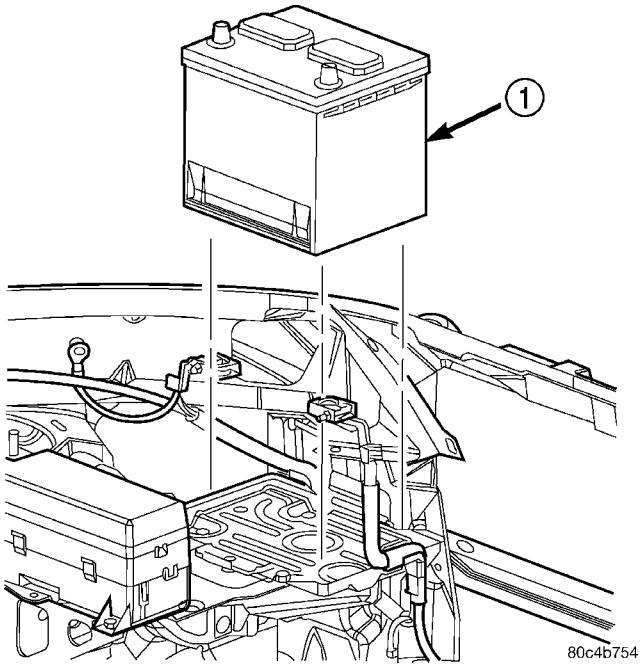

Fig. 118 Battery Removal/Installation

1 - BATTERY

(19) Install the air cleaner assembly (Fig. 119).

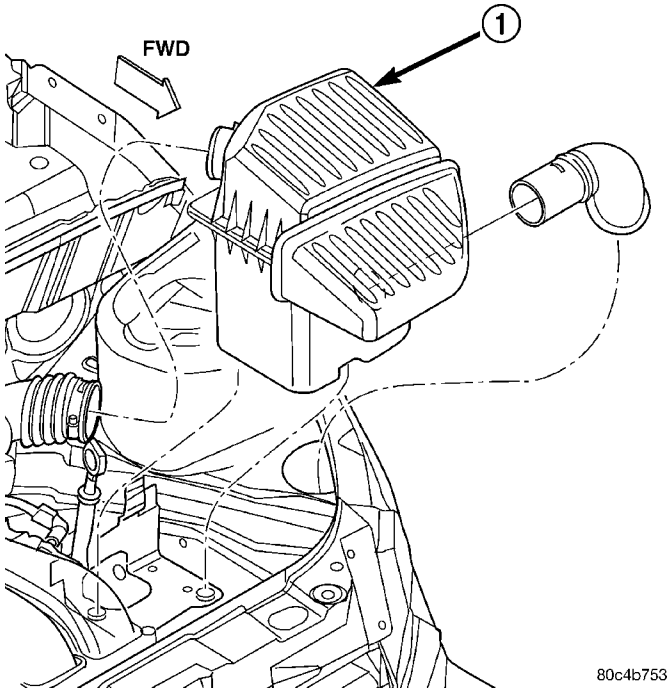

Fig. 119 Air Cleaner Assembly Removal/Installation

1 - AIR CLEANER ASSEMBLY

(20) Connect battery cables.

ADJUSTMENTS

ADJUSTMENT - GEARSHIFT CROSSOVER CABLE

(1) Remove center console from vehicle. (Refer to 23 - BODY/INTERIOR/CENTER CONSOLE - REMOVAL)

(2) Loosen adjusting screw on crossover cable at shifter (Fig. 120).

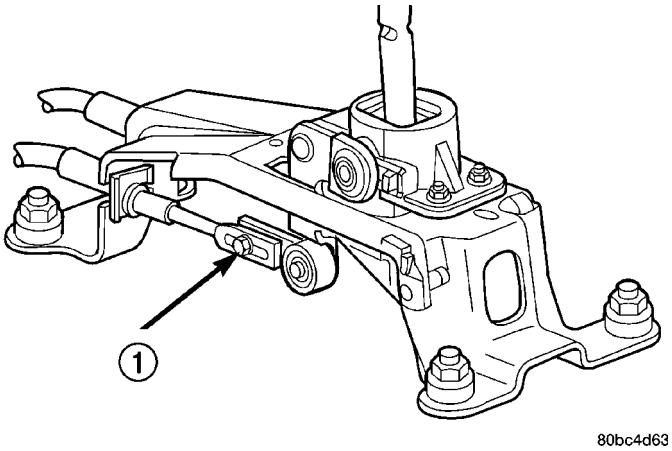

Fig. 120 Loosen Crossover Cable Adjustment Screw

1 - CROSSOVER ADJUSTMENT SCREW

(3) The gearshift mechanism and transaxle crossover lever are spring-loaded and self-centering. Alignment pins used in the past are not required anymore. Allow gearshift mechanism and transaxle crossover lever to relax in their neutral positions. To ensure the gearshift lever is in the proper position, place the shifter in 3rd or 4th gear if necessary. Torque adjustment screw to 8 N·m (70 in. lbs.). Care must be taken to avoid moving the shift mechanism off-center during screw tightening.

(4) Reinstall center console. Reinstall boot and knob. (Refer to 23 - BODY/INTERIOR/CENTER CONSOLE - INSTALLATION)

GEAR SHIFT KNOB

REMOVAL

(1) Pull up on gearshift knob with moderate force to remove from gearshift mechanism (Fig. 121) .

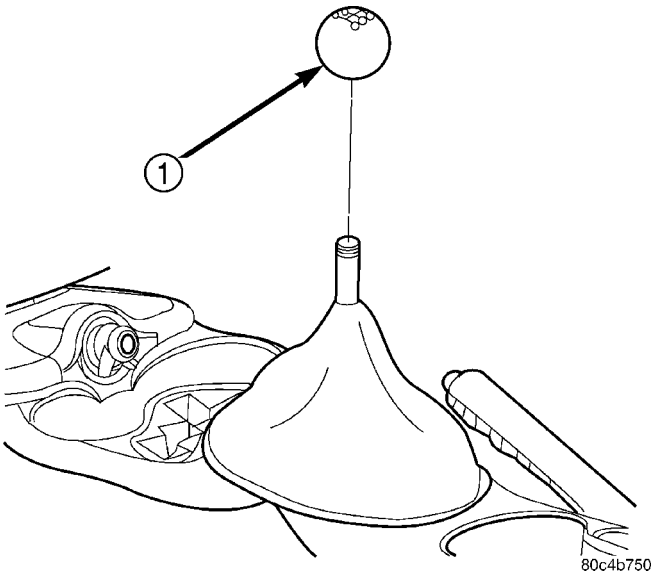

Fig. 121 Gearshift Knob Removal/Installation

1 - GEARSHIFT KNOB

INSTALLATION

(1) Position knob hole over the gearshift mechanism and align the shift pattern.

(2) Strike knob with rubber mallet to engage knob to mechanism.

(3) Verify that shift pattern is aligned properly.

GEAR SHIFT MECHANISM

REMOVAL

(1) Pull up on gearshift knob with moderate force to remove from gearshift mechanism (Fig. 122).

(2) Remove shifter boot/bezel assembly from console by lifting up at mounting ring area (Fig. 123).

(3) Remove the center console assembly as shown in (Fig. 124). Remove rear power window switch (if equipped) and disconnect harness from console.

(4) Remove crossover cable retaining clip and disconnect from shift lever (Fig. 125).

(5) Remove selector cable retaining clip and disconnect from shift lever (Fig. 126).

(6) Remove four shifter assy.-to-floor pan nuts and remove shifter from vehicle (Fig. 127).

INSTALLATION

(1) Install shifter assy. to floor pan (Fig. 127). Install and tighten four nuts to 12 N·m (105 in. lbs.) torque.

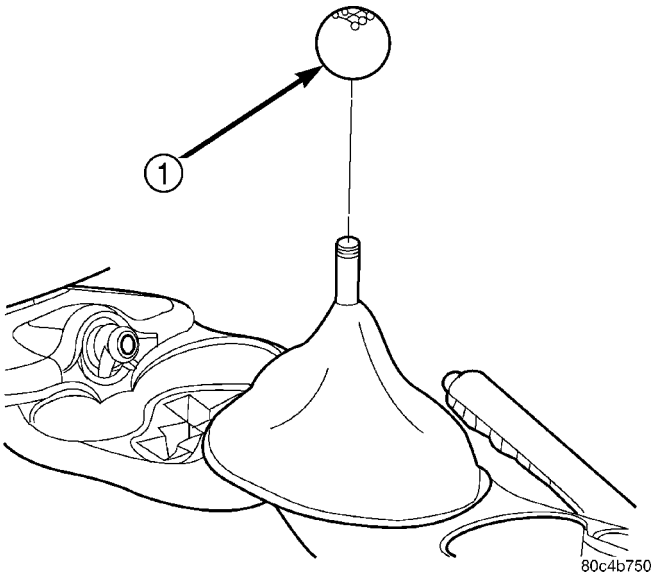

Fig. 122 Gearshift Knob Removal/Installation

1 - GEARSHIFT KNOB

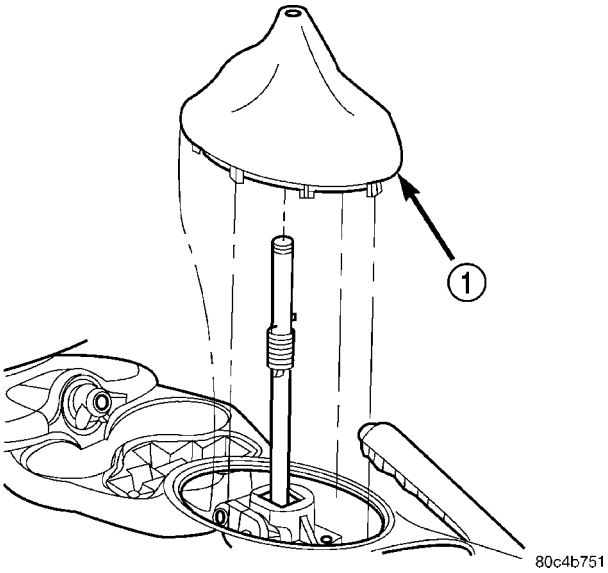

Fig. 123 Gearshift Boot Removal/Installation

1 - GEARSHIFT BOOT

(2) Install selector cable to shifter lever and secure cable to shifter bracket. Install clip (Fig. 126).

(3) Install crossover cable to shifter lever and secure cable to shifter bracket. Install clip (Fig. 125).

NOTE: Only the crossover cable is adjustable. The selector cable does not have any adjustment capabilities.

(4) Adjust crossover cable. (Refer to 21 - TRANSMISSION/TRANSAXLE/MANUAL/GEAR SHIFT CABLE - ADJUSTMENTS)

GEAR SHIFT MECHANISM (Continued)

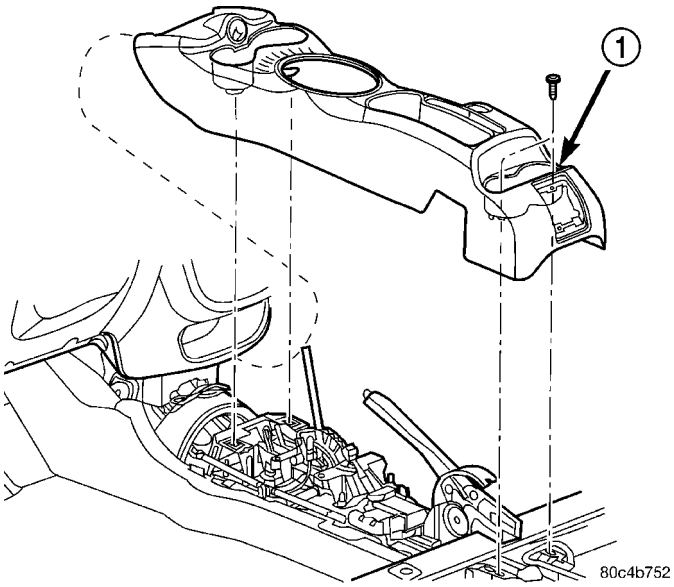

Fig. 124 Center Console Removal/Installation—Typical

1 - CENTER CONSOLE

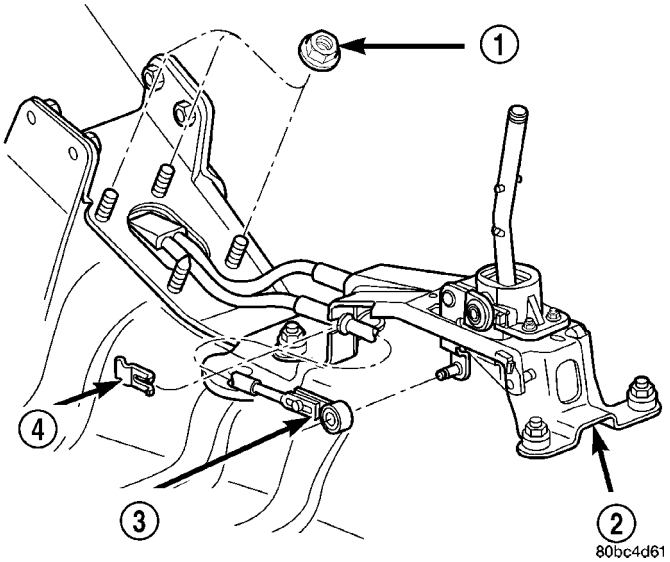

Fig. 125 Crossover Cable at Shifter Assembly

1 - GROMMET PLATE NUT
2 - SHIFTER
3 - CROSSOVER CABLE
4 - CLIP

(5) Install center console assembly (Fig. 124). Install rear power window switch (if equipped) and fasten harness to console.

(6) Position gearshift boot (Fig. 123) over the gearshift mechanism and engage tab on mount ring at front to opening in console. Apply hand pressure to engage bosses on mount ring of boot to console opening slots.

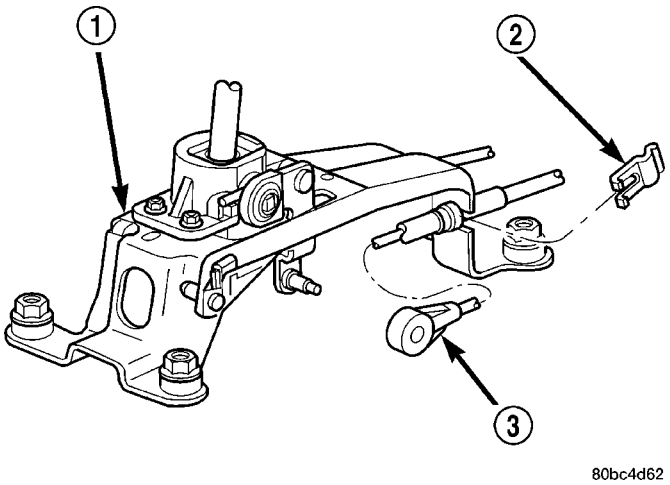

Fig. 126 Selector Cable at Shifter Assembly

1 - SHIFTER
2 - CLIP
3 - SELECTOR CABLE

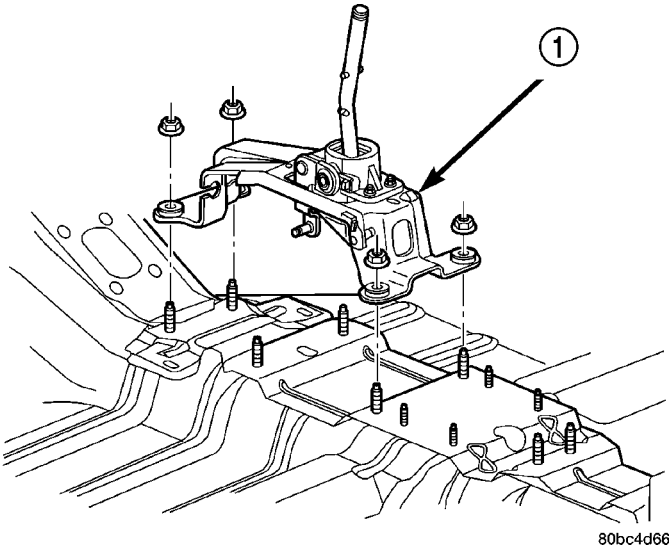

Fig. 127 Shifter Assy. Removal/Installation

1 - SHIFTER ASSEMBLY

(7) Position gearshift knob hole over the gearshift mechanism (Fig. 122) and align the shift pattern.

(8) Strike knob with rubber mallet to engage knob to mechanism.

(9) Verify that shift pattern is aligned properly.

INPUT BEARING AND SLEEVE

REMOVAL

The input bearing is a one–piece bearing and sleeve unit (Fig. 128). The sleeve is the slide point for the clutch–release bearing and lever.

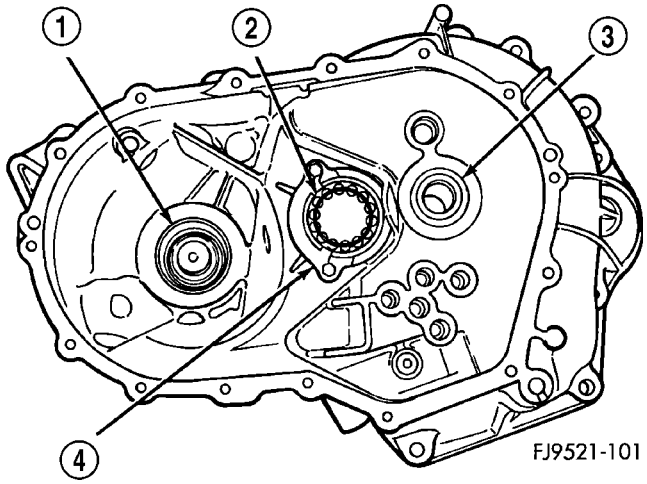

Fig. 128 Input Bearing And Sleeve

1 - DIFFERENTIAL BEARING
2 - OUTPUT BEARING
3 - INPUT BEARING
4 - BEARING RETAINER

(1) Install tool #6342 over input bearing on the gear case side of the transaxle clutch housing.

(2) Press the input bearing out of the housing (Fig. 129).

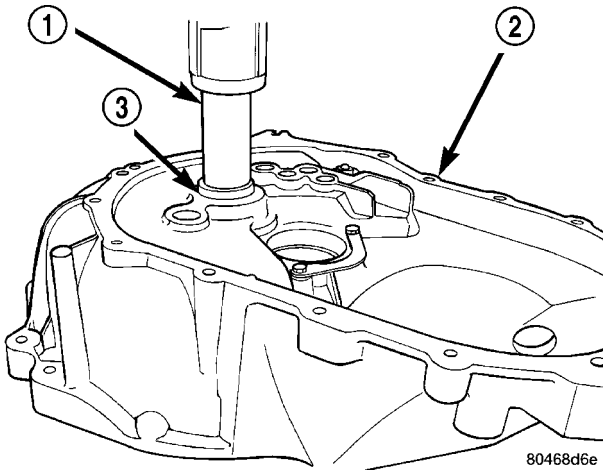

Fig. 129 Input Bearing Removal

1 - SPECIAL TOOL 6342
2 - BELLHOUSING HALF
3 - INPUT BEARING AND SLEEVE

INSTALLATION

(1) Apply coating of Loctite® sealant on bearing outer diameter. Position sleeve and bearing assembly at input bearing bore.

(2) Install tool #C-4680-1 over input bearing (Fig. 130).

(3) Using the spacer tool #4894 and shop press, install input bearing into bore until it is fully seated (Fig. 131).

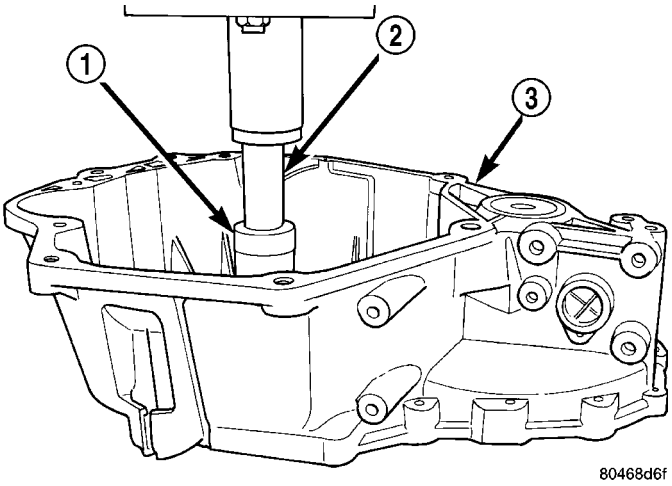

Fig. 130 Input Bearing Tool

1 - SPECIAL TOOL C-4680-1
2 - SPECIAL TOOL 4894
3 - BELLHOUSING HALF

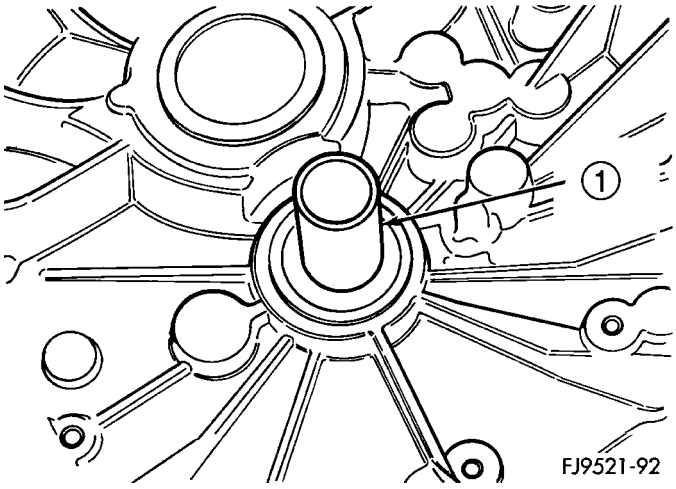

Fig. 131 Input Bearing Installed

1 - SLEEVE AND BEARING ASSEMBLY

INPUT SHAFT

DISASSEMBLY

Before disassembly of the input shaft, it is necessary to check the synchronizer stop ring gap. Use a feeler gauge to measure the gaps between the stop rings and the speed gears. The correct gaps are listed below:

- 1st - 0.522-2.208 mm (0.021-0.087 in)
- 2nd - 0.522-2.208 mm (0.021-0.087 in)
- 3rd - 0.73-1.53 mm (0.029-0.060 in)
- 4th - 0.77-1.57 mm (0.030-0.062 in).
- 5th - 0.73-1.53 mm (0.029-0.060 in)

If a stop ring gap does not fall within the specifications, it must be inspected for wear and replaced. If the 1st or 2nd synchronizer stop ring is worn beyond specifications, the complete output shaft assembly must be replaced.

The input shaft incorporates the 3rd, 4th, and 5th speed gears and synchronizers on the assembly (Fig. 132).

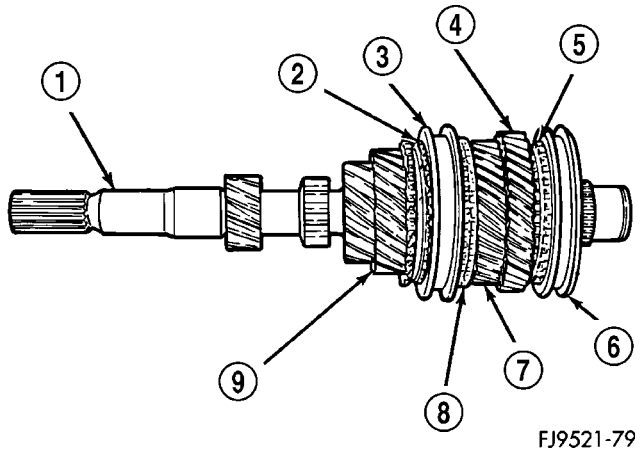

Fig. 132 Input Shaft

1 - INPUT SHAFT
2 - STOP RING
3 - SLEEVE
4 - 5TH SPEED GEAR
5 - STOP RING
6 - SLEEVE
7 - 4TH SPEED GEAR
8 - STOP RING
9 - 3RD SPEED GEAR

(1) Install bearing splitter behind 5th speed gear. Remove snap ring at 5th synchronizer hub on input shaft (Fig. 133).

(2) Remove synchronizer and gear using shop press (Fig. 134).

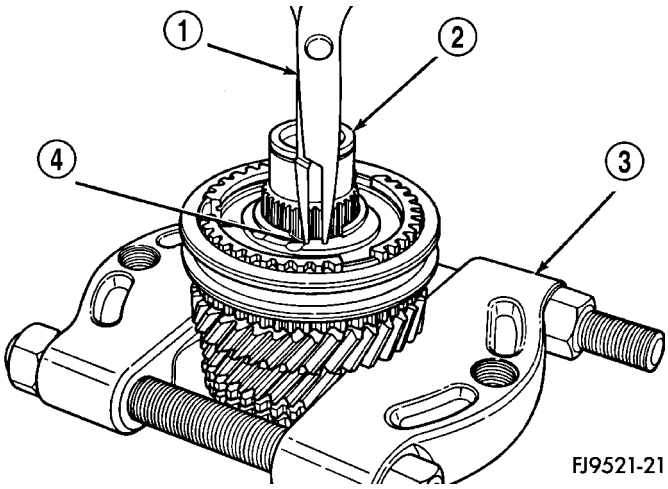

Fig. 133 5th Synchro and Hub Snap Ring Removal

1 - SNAP RING PLIERS
2 - INPUT SHAFT
3 - BEARING SPLITTER
4 - SNAP RING

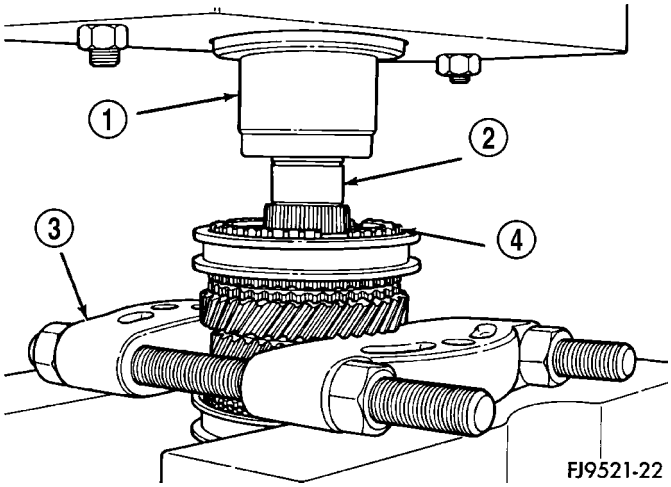

Fig. 134 Remove Synchronizer Using Shop Press

1 - PRESS RAM
2 - INPUT SHAFT
3 - BEARING SPLITTER
4 - SYNCHRONIZER ASSEMBLY

INPUT SHAFT (Continued)

(3) Remove caged needle bearing (Fig. 135).

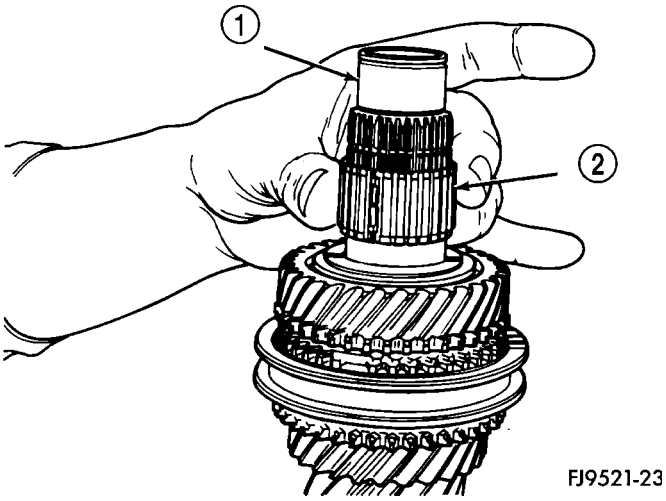

Fig. 135 Caged Needle Bearing Removal

1 - INPUT SHAFT
2 - CAGED NEEDLE BEARING

(4) Remove 4-5 gears split thrust washer ring (Fig. 136).

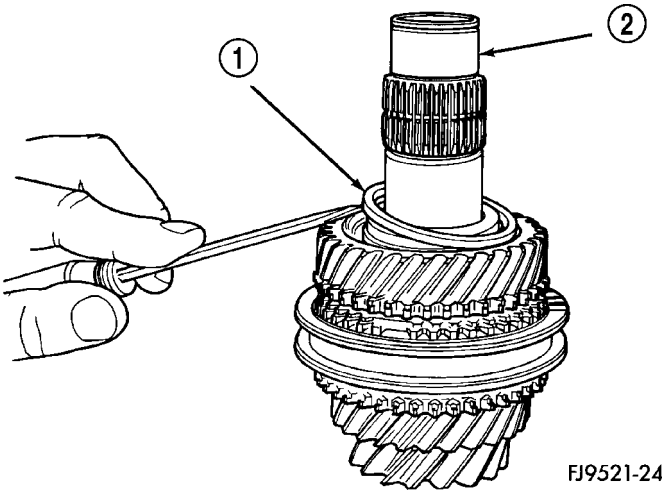

Fig. 136 Split Thrust Washer Ring

1 - SPLIT THRUST WASHER RING
2 - INPUT SHAFT

(5) Remove split thrust washer (Fig. 137).

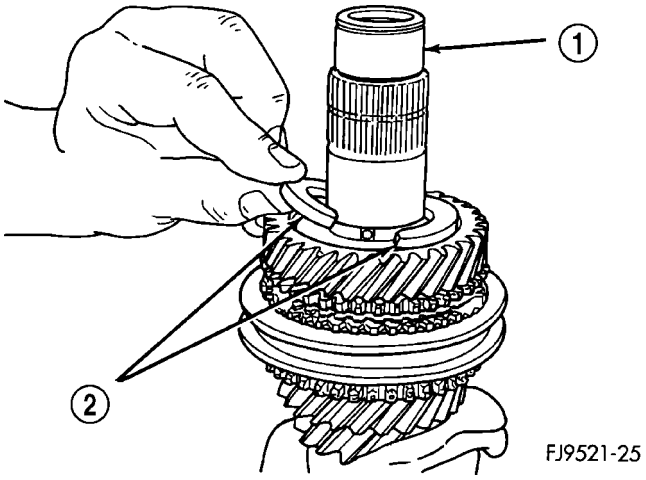

Fig. 137 Split Thrust Washer Removal

1 - INPUT SHAFT
2 - SPLIT THRUST WASHER

(6) Remove split thrust washer separation pin (Fig. 138).

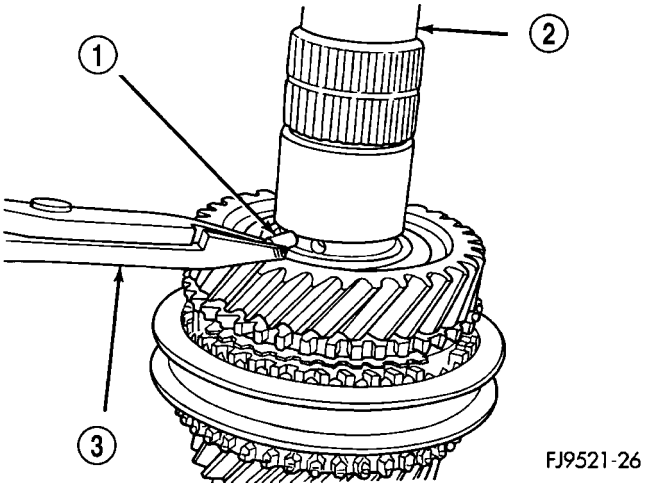

Fig. 138 Split Thrust Washer Separation Pin

1 - SEPARATION PIN
2 - INPUT SHAFT
3 - PLIERS

INPUT SHAFT (Continued)

(7) Remove 4th gear (Fig. 139).

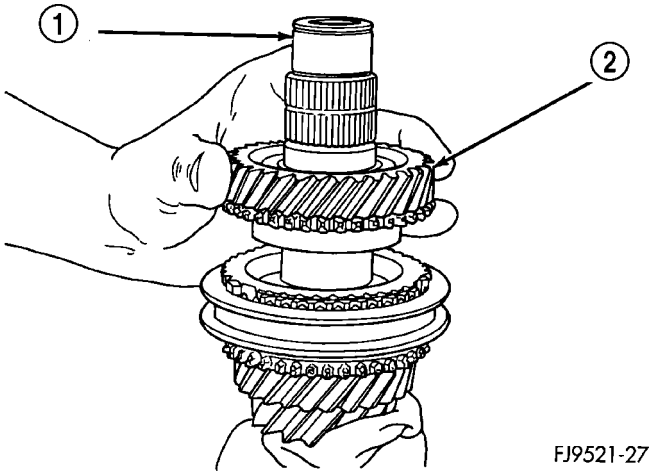

Fig. 139 4th Gear Removal

1 - INPUT SHAFT
2 - 4TH GEAR

(8) Remove 4th gear caged needle bearing (Fig. 140). Check the caged needle bearing for a broken retention spring.

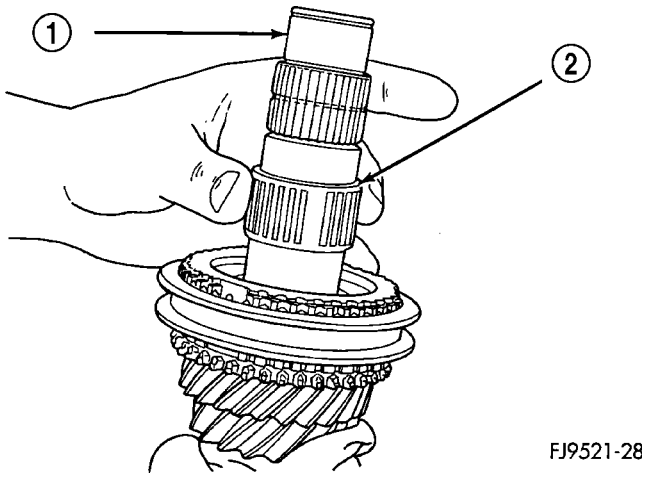

Fig. 140 Caged Needle Bearing Removal

1 - INPUT SHAFT
2 - CAGED NEEDLE BEARING

(9) Remove blocking ring. Remove 3-4 synchronizer hub retaining snap ring (Fig. 141).

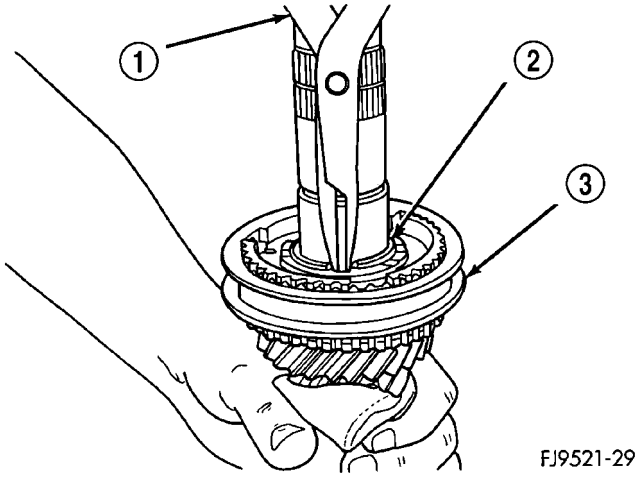

Fig. 141 3-4 Synchronizer Hub Snap Ring

1 - SNAP RING PLIERS
2 - SYNCHRO SNAP RING
3 - SYNCHRONIZER ASSEMBLY

(10) Install input shaft in shop press. Using bearing splitter, remove 3-4 synchronizer and 3rd gear (Fig. 142).

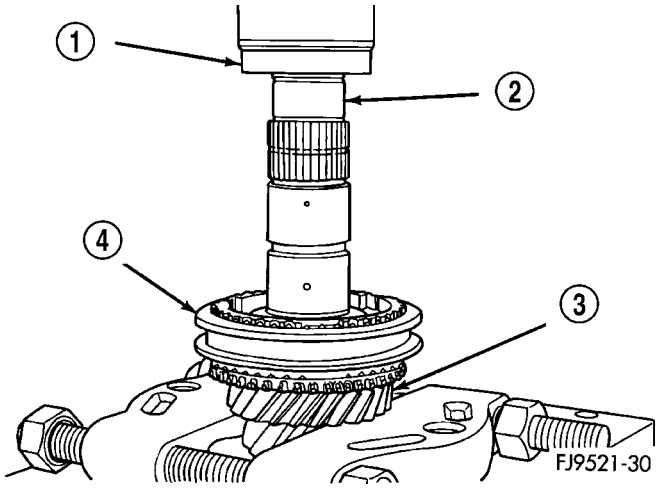

Fig. 142 3rd Gear Removal

1 - PRESS RAM
2 - INPUT SHAFT
3 - 3RD GEAR
4 - SYNCHRONIZER ASSEMBLY

INPUT SHAFT (Continued)

(11) Remove 3rd gear caged needle bearing (Fig. 143). Inspect needle bearing for a broken retention spring

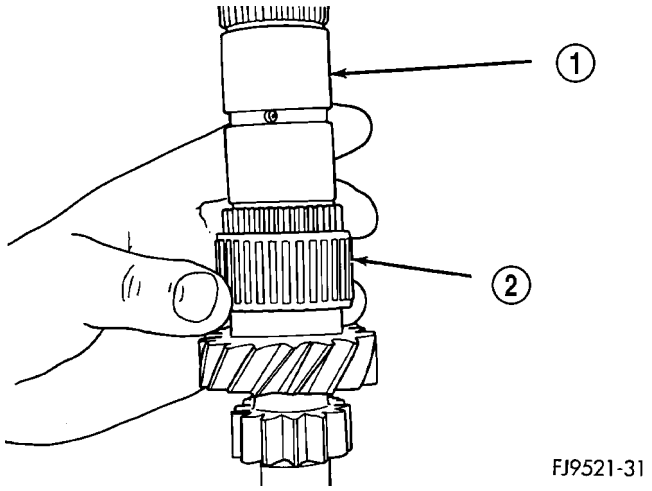

Fig. 143 3rd Gear Caged Needle Bearing

1 - INPUT SHAFT
2 - 3RD GEAR CAGED NEEDLE BEARING

(12) Inspect the input shaft for worn or damaged bearing races or chipped gear teeth. Replace as necessary.

ASSEMBLY

The snap rings that are used on the input shaft are available in select fit sizes. Use the thickest snap ring that fits in each snap ring groove.

(1) Place input shaft into shop press.

(2) Install 3rd gear caged needle bearing (Fig. 144).

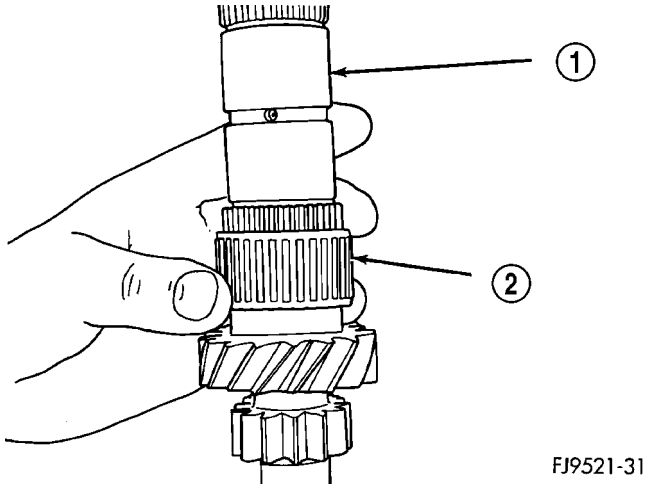

Fig. 144 3rd Gear Caged Needle Bearing

1 - INPUT SHAFT
2 - 3RD GEAR CAGED NEEDLE BEARING

(3) Install 3rd gear and 3-4 synchronizer onto input shaft. Install Tool #C-3717 over input shaft and press on synchronizer hub and 3rd gear (Fig. 145). The synchronizer hub has the letter **U** stamped on the top face of the hub. This designates that the hub must be installed with the **U** facing upward.

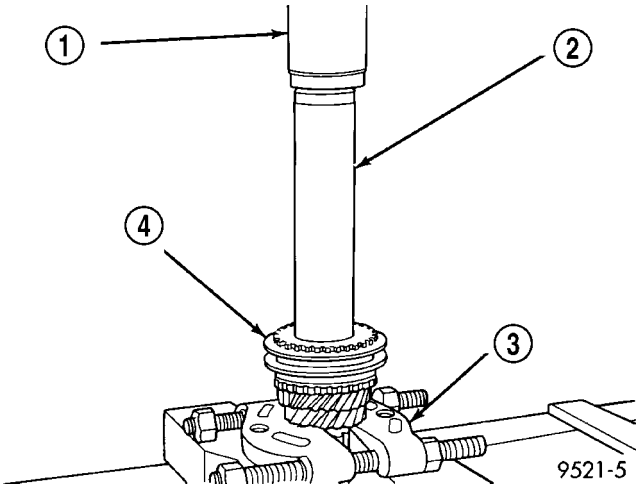

Fig. 145 Press On 3rd Gear Synchronizer Hub

1 - PRESS RAM
2 - SPECIAL TOOL C-3717
3 - BEARING SPLITTER
4 - 3RD GEAR SYNCHRONIZER ASSEMBLY

(4) Install 3-4 synchronizer snap ring into slot on input shaft.

(5) Install blocking ring into 3-4 synchronizer. Install 4th gear caged needle bearing.

(6) Install 4th gear onto input shaft.

(7) Install 4-5 split thrust washer separation pin (Fig. 146).

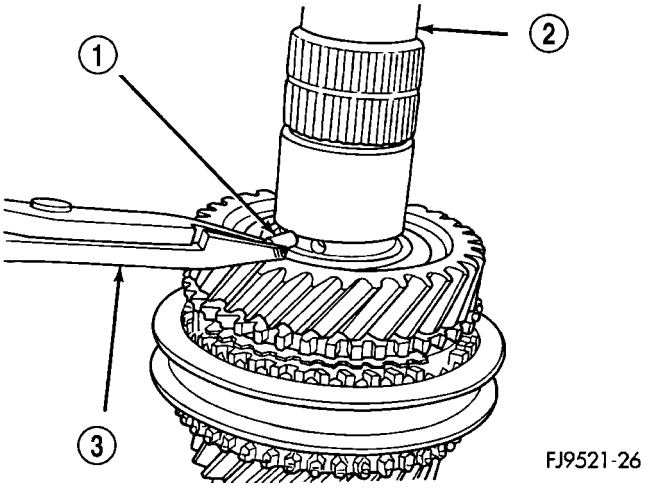

Fig. 146 Split Thrust Washer Separation Pin

1 - SEPARATION PIN
2 - INPUT SHAFT
3 - PLIERS

INPUT SHAFT (Continued)

(8) Install split thrust washer onto input shaft (Fig. 147).

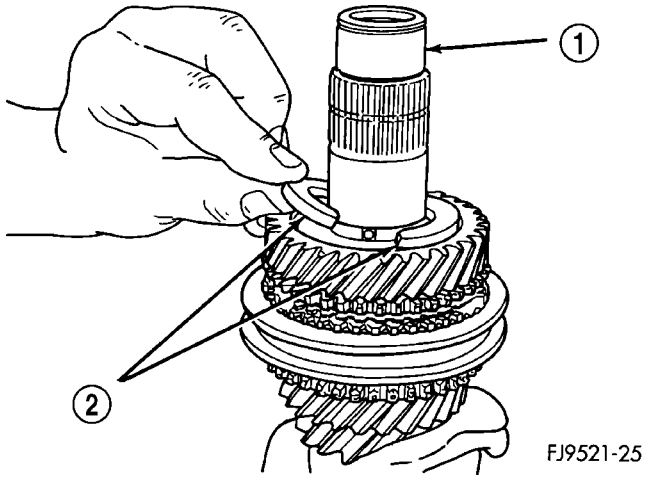

Fig. 147 Split Thrust Washer Installation

1 - INPUT SHAFT
2 - SPLIT THRUST WASHER

(9) Install split thrust washer retaining ring (Fig. 148).

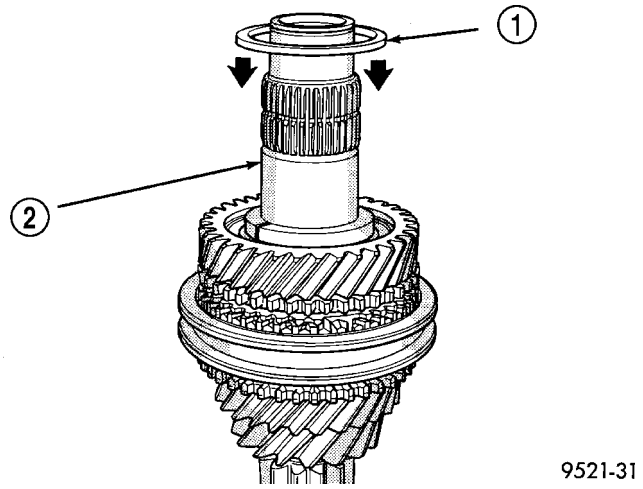

Fig. 148 Retaining Ring Installation

1 - SPLIT THRUST WASHER RING
2 - INPUT SHAFT

(10) Install 5th gear caged needle bearing (Fig. 149).

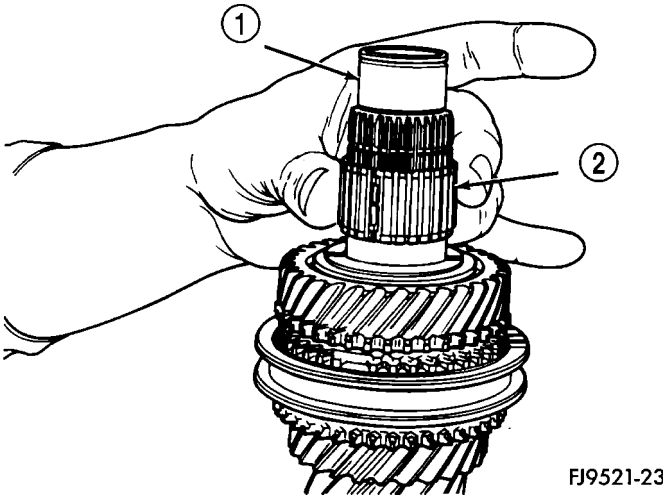

Fig. 149 Caged Needle Bearing Installation

1 - INPUT SHAFT
2 - CAGED NEEDLE BEARING

(11) Using special tool #C-3717, install 5th speed gear and synchronizer (Fig. 150). The 5th gear synchronizer hub has the letter **S** stamped on the top face of the hub. This designates that the hub must be installed with the **S** facing upward.

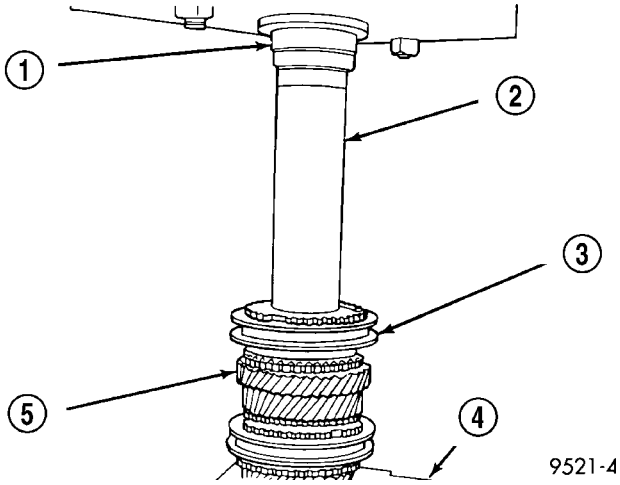

Fig. 150 5th Speed Gear Installation

1 - PRESS RAM
2 - SPECIAL TOOL C-3717
3 - SYNCHRONIZER ASSEMBLY
4 - BEARING SPLITTER
5 - 5TH SPEED GEAR

INPUT SHAFT (Continued)

(12) Install 5th gear synchronizer snap ring (Fig. 151).

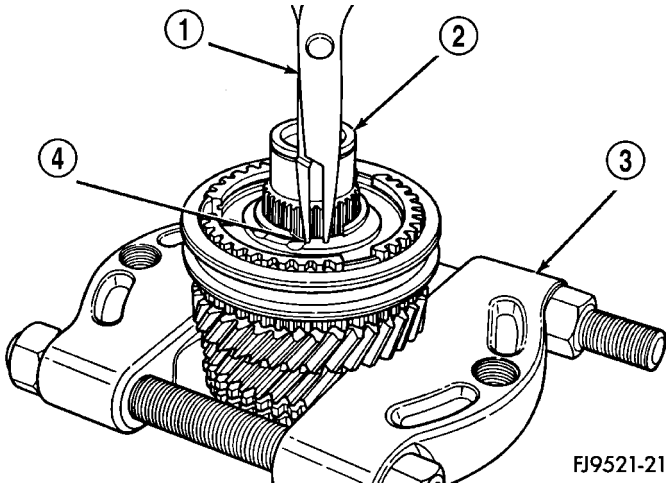

Fig. 151 5th Gear Synchronizer Snap Ring Installation

1 - SNAP RING PLIERS
2 - INPUT SHAFT
3 - BEARING SPLITTER
4 - SNAP RING

OUTPUT SHAFT

DISASSEMBLY

CAUTION: The output shaft is serviced as an assembly. Do not try to repair any component on the output shaft. If the 1-2 synchronizer or gear fails, it is necessary to replace the output shaft assembly.

It is necessary to check the synchronizer stop ring gap. Use a feeler gauge to measure the gaps between the stop rings and the speed gears. The correct gaps are listed below:

- 1st—0.522-2.208 mm (0.021-0.087 in)
- 2nd—0.522-2.208 mm (0.021-0.087 in)
- 3rd—0.73-1.53 mm (0.029-0.060 in)
- 4th—0.77-1.57 mm (0.030-0.062 in)
- 5th—0.73-1.53 mm (0.029-0.060 in)

If a stop ring gap does not fall within the specifications it must be inspected for wear and replaced. If the 1st or 2nd synchronizer stop ring is worn beyond specifications, the complete output shaft assembly must be replaced.

The output shaft incorporates the 1st and 2nd gears and synchronizers on the assembly (Fig. 152).

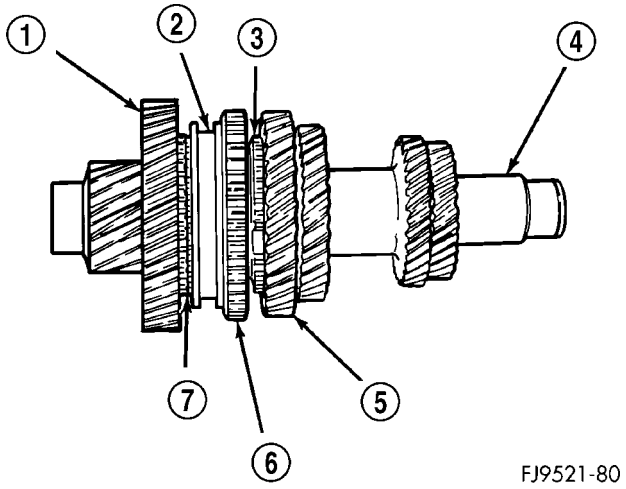

Fig. 152 Output Shaft

1 - 1ST GEAR
2 - SLEEVE
3 - STOP RING
4 - OUTPUT SHAFT
5 - 2ND SPEED GEAR
6 - REVERSE GEAR
7 - STOP RING

OUTPUT BEARING AND RACE

REMOVAL

CAUTION: The position of the output shaft bearing is critical. The bearing is not identical end-to-end. Install bearing with larger diameter cage ring facing out.

(1) Remove caged roller bearing from output bearing race (Fig. 153).

(2) Remove screws at output bearing retainer strap (Fig. 154).

(3) Install tool #6787 and slide hammer (Fig. 155). Tighten tool to output bearing race.

(4) Using slide hammer, remove output bearing race.

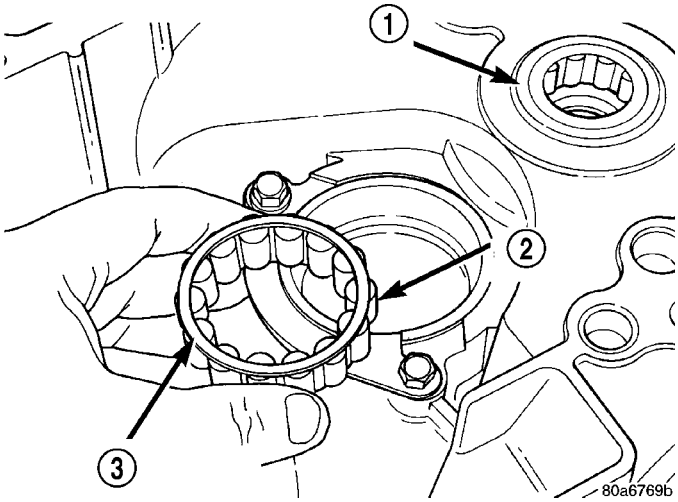

Fig. 153 Output Roller Bearing

1 - INPUT BEARING
2 - OUTPUT BEARING
3 - LARGER DIAMETER CAGE RING

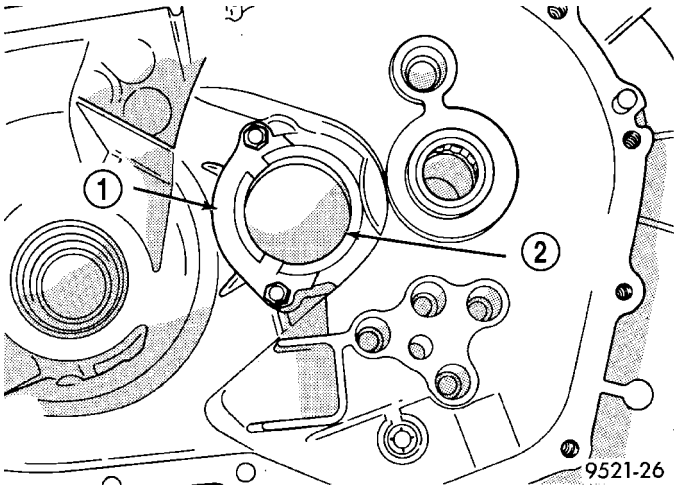

Fig. 154 Output Bearing Strap

1 - BEARING RETAINER
2 - OUTPUT BEARING RACE

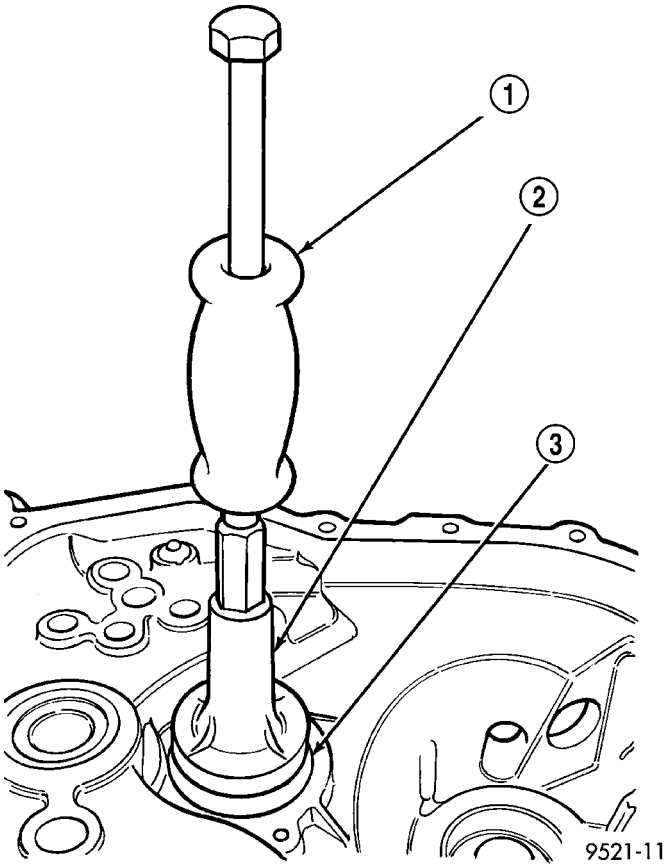

Fig. 155 Output Bearing Race Removal

1 - C-3752
2 - SPECIAL TOOL 6787
3 - OUTPUT SHAFT BEARING RACE

OUTPUT BEARING AND RACE (Continued)

INSTALLATION

(1) Line up output bearing race to race bore.

(2) Insert tool #4628 with C-4171 into output bearing race (Fig. 156). Tap race into bore. Install output bearing into race. Verify that the larger diameter cage is facing outward. Position bearing retaining strap. Tighten bolts to 11 N·m (96 in. lbs.).

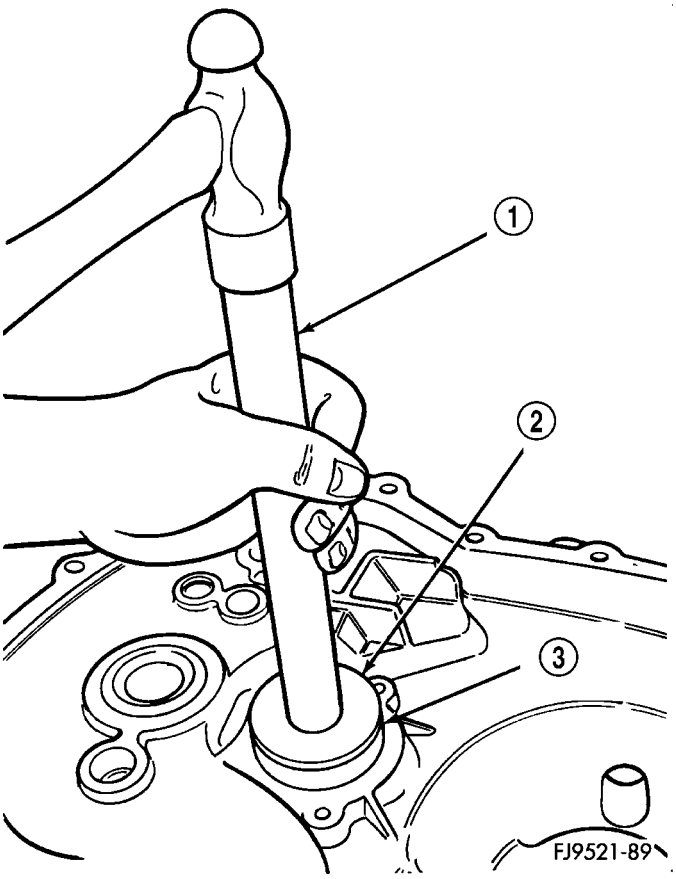

Fig. 156 Output Bearing Race Installation

1 - TOOL C-4171
2 - TOOL C-4628
3 - OUTPUT BEARING RACE

REAR BEARING OIL FEED TROUGH

REMOVAL

The bearing oil feed trough is retained in the case by a pin that is molded into the case and clips that are part of the trough (Fig. 157).

(1) Using light plier pressure, squeeze the clips together at the rear of the trough.

(2) Slide the trough over the retaining pin that locates the trough in the case.

INSTALLATION

(1) To install oil feed trough, reverse removal procedure.

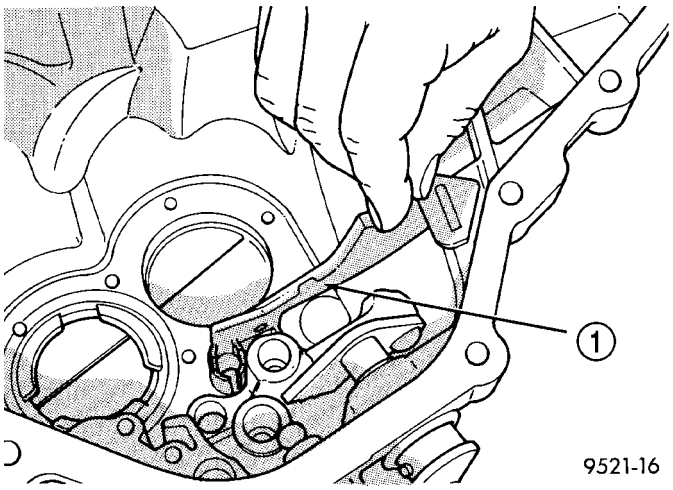

Fig. 157 Oil Feed Trough

1 - OIL FEED TROUGH

SHIFT CROSSOVER LEVER

REMOVAL

(1) Disconnect crossover cable from crossover lever and cable bracket. Refer to Gearshift Cable Removal and Installation in this Group.

(2) Using a pin punch, remove the crossover roll pin from lever.

(3) Pull up and remove the crossover lever from the transaxle crossover shaft (Fig. 158) .

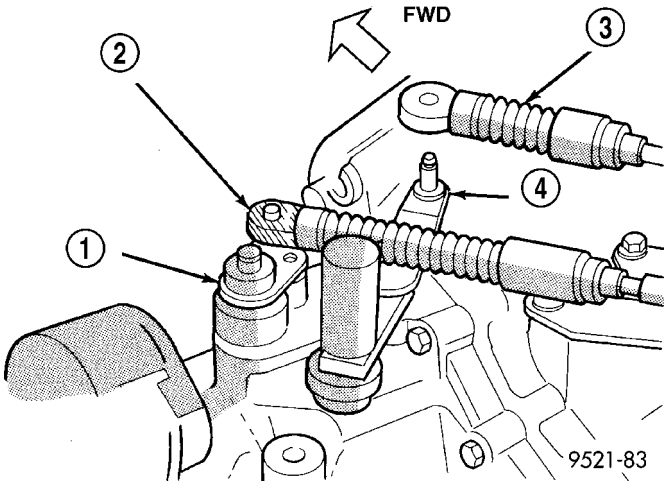

Fig. 158 Crossover Lever

1 - CROSSOVER LEVER
2 - CROSSOVER CABLE
3 - SELECTOR CABLE
4 - SELECTOR LEVER

SHIFT CROSSOVER LEVER (Continued)

INSTALLATION

(1) Install crossover lever to shaft and fasten with NEW roll pin.

(2) Install crossover cable to bracket. Fasten with clip.

(3) Install crossover cable to crossover lever.

SHIFT CROSSOVER SHAFT

REMOVAL

(1) Disassemble transaxle.

(2) With the transaxle disassembled, remove the crossover shaft seal.

(3) Using snap–ring pliers, remove the snap ring at the crossover shaft bore (Fig. 159).

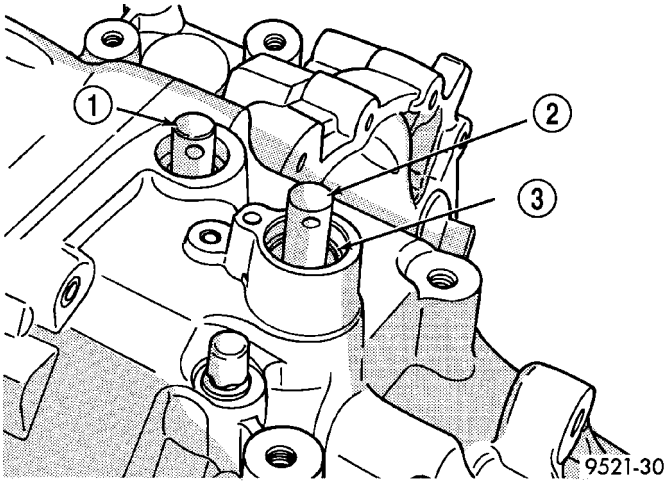

Fig. 159 Crossover Shaft Snap Ring

1 - SELECTOR SHAFT
2 - CROSSOVER SHAFT
3 - SNAP RING

(4) Push the crossover shaft in the case and remove the crossover assembly.

INSTALLATION

(1) Install crossover shaft to case and install snap ring (Fig. 159).

(2) Install the crossover shaft seal.

(3) Assemble transaxle.

SHIFT CROSSOVER SHAFT BUSHING

REMOVAL

(1) Install slide hammer #3752 through the crossover bushing.

(2) Thread nut and washer onto slide hammer.

(3) Using the slide hammer, remove the crossover shaft bushing (Fig. 160).

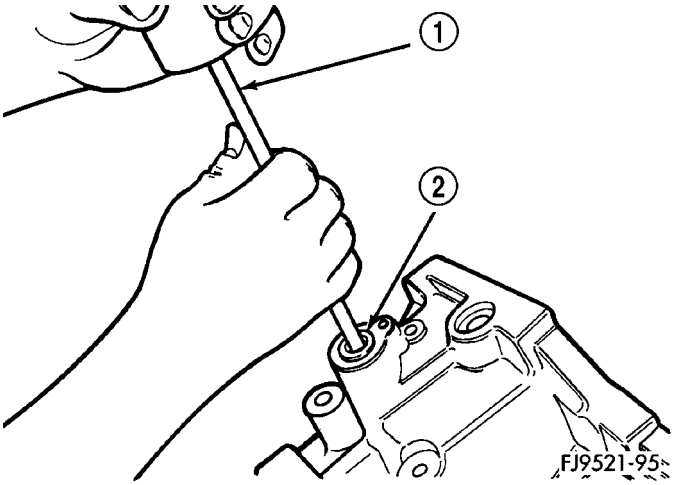

Fig. 160 Crossover Shaft Bushing Removal

1 - SLIDE HAMMER
2 - SHIFTER SHAFT BUSHING

INSTALLATION

(1) Position the replacement crossover shaft bushing over the crossover shaft bushing bore.

(2) Using an appropriate size deep–well socket, install the crossover shaft bushing into the bushing bore.

SHIFT RAIL AND FORK

DISASSEMBLY

(1) Remove shift rails from the geartrain.

(2) To service the 5-R shift rail, remove the C-clip retaining the reverse shift lever arm. Remove the 5th shift fork roll pin and remove the 5th shift fork. Remove the shift lug roll pin and remove the shift lug. Replace parts as necessary.

(3) To service the 3-4 shift rail, remove the roll pin retaining the 3-4 shift fork. Remove the shift fork. Remove the shift lug roll pin and remove the shift lug. Replace parts as necessary.

(4) To service the 1-2 shift rail, remove the roll pin retaining the 1-2 shift fork. Remove the shift fork and replace parts as necessary.

SHIFT RAIL BUSHINGS

REMOVAL

(1) Thread tool #6786 into shift rail bushing.

(2) Install slide hammer #3752 onto tool.

(3) Remove bushing using slide hammer and tool assembly (Fig. 161).

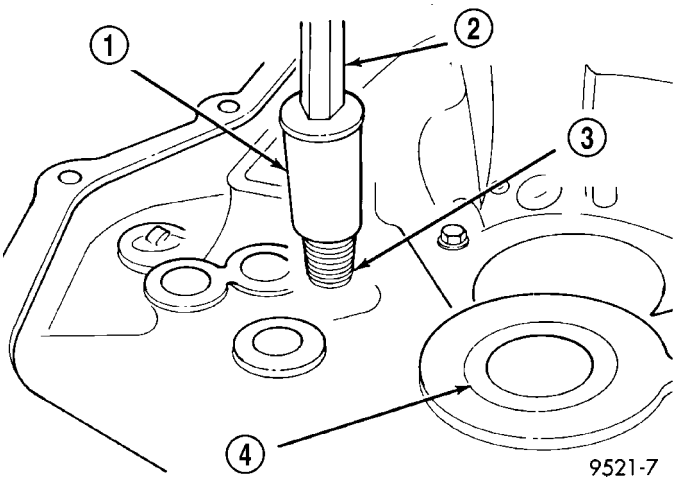

Fig. 161 Shift Rail Bushing Removal

1 - SPECIAL TOOL 6786
2 - SLIDE HAMMER C-3752
3 - SHIFTER RAIL BUSHING
4 - INPUT BEARING

INSTALLATION

(1) Line up replacement bushing in bore.

(2) Using tool #MD998343, tap bushing into bore until flush with the chamfer in the case.

SHIFT SELECTOR SHAFT

REMOVAL

(1) Disassemble transaxle.

(2) With the transaxle disassembled, remove the selector shaft by pushing on the shaft from the outside. Pull shaft out from the inside.

INSTALLATION

(1) Pull selector shaft into position from the outside.

(2) Assemble transaxle.

SHIFT SELECTOR SHAFT BUSHING

REMOVAL

(1) Remove selector shaft using procedure in this group.

(2) Thread tool #6786 into bushing.

(3) Install slide hammer #3752 onto tool and remove bushing using slide hammer (Fig. 162).

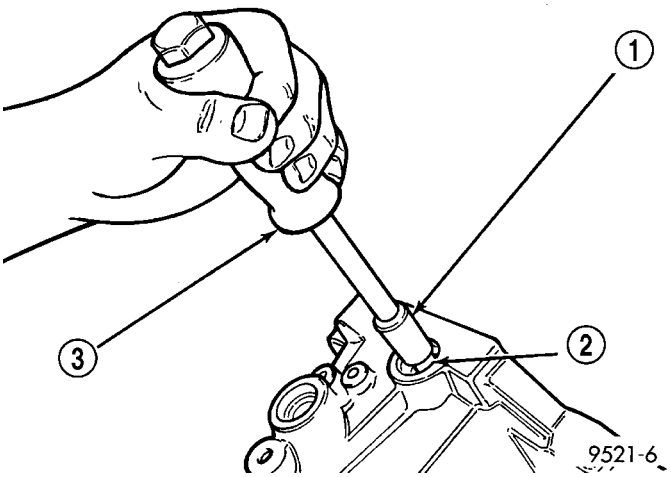

Fig. 162 Selector Shaft Bushing Removal

1 - SPECIAL TOOL 6786
2 - SHIFT SHAFT BUSHING
3 - SLIDE HAMMER C-3752

SHIFT SELECTOR SHAFT BUSHING (Continued)

INSTALLATION

(1) Position replacement bushing over selector shaft bore.

(2) Using an appropriate size deep–well socket, install bushing in selector shaft bore (Fig. 163).

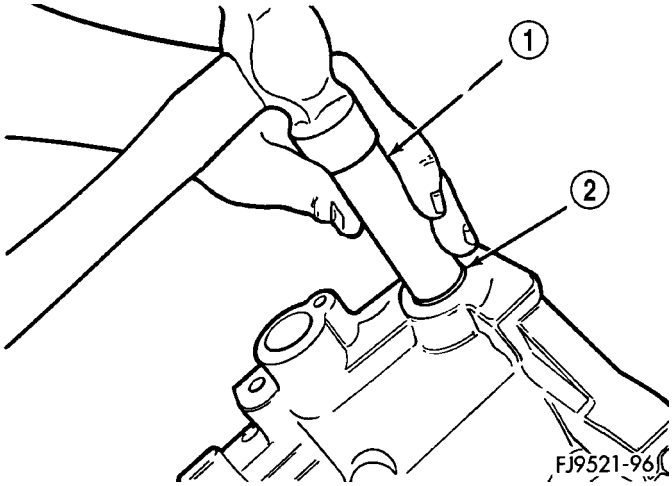

Fig. 163 Selector Shaft Bushing Installation

1 - DEEP WELL SOCKET
2 - SHIFTER SHAFT BUSHING

SHIFT SHAFT SEALS

REMOVAL

It is not necessary to remove the shift shafts from the transaxle to service the shift shaft seals.

(1) Using a pick tool, pry up on the shift shaft seal, and remove seal from bore.

INSTALLATION

(1) Position new shift shaft seal into bore.

(2) Install shift shaft seal into bore using an appropriate size deep-well socket.

SYNCHRONIZER

DISASSEMBLY

Place synchronizer in a clean shop towel and wrap. Press on inner hub. Carefully open up shop towel and remove springs, balls, keys, hub, and sleeve.

CLEANING

CLEAN

Do not attempt to clean the blocking rings in solvent. The friction material will become contaminated. Place synchronizer components in a suitable holder and clean with solvent. Air dry.

INSPECTION

INSPECT

Proper inspection of components involve:

- Teeth, for wear, scuffed, nicked, burred, or broken teeth
- Keys, for wear or distortion
- Balls and springs, for distortion, cracks, or wear

If any of these conditions exist in these components, replace as necessary.

ASSEMBLY

(1) Position synchronizer hub onto a suitable holding fixture (input shaft). The synchronizer hubs are directional. The hubs must be installed with the **U** facing upward.

(2) Install springs into hub slot (Fig. 164) .

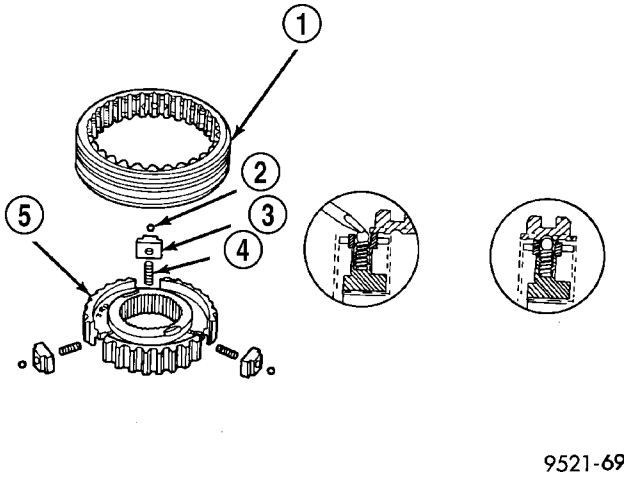

Fig. 164 Synchronizer Assembly

1 - SLEEVE
2 - BALL
3 - KEY
4 - SPRING
5 - HUB

SYNCHRONIZER (Continued)

(3) Insert key into hub and spring.

(4) Apply petroleum jelly to the hole in the key. Insert balls into each key (Fig. 165) .

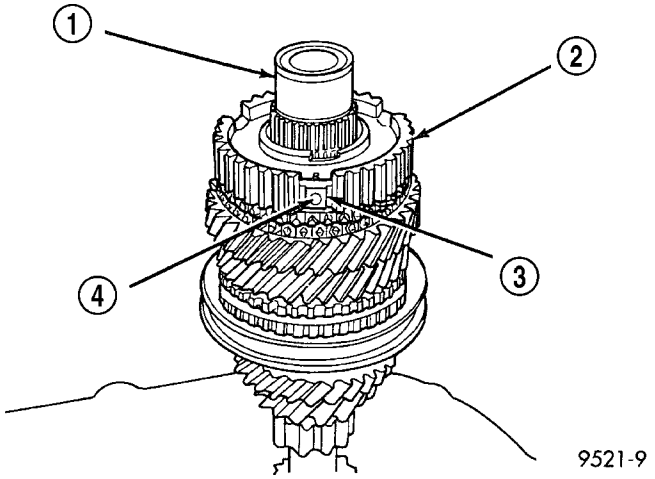

Fig. 165 Synchronizer Balls

1 - INPUT SHAFT
2 - HUB
3 - KEY
4 - BALL

(5) Slide sleeve over the hub and depress balls as you carefully slip the sleeve into position (Fig. 166) .

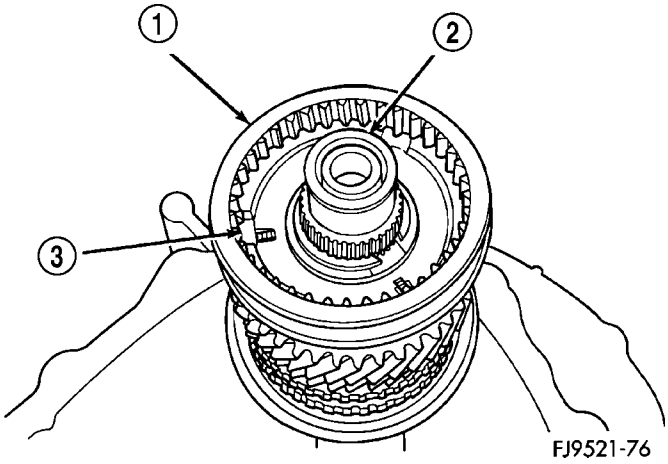

Fig. 166 Synchronizer Sleeve

1 - SLEEVE
2 - INPUT SHAFT
3 - KEY

(6) Line up stop ring tang over the keys in the hub (Fig. 167) . Install stop rings. Center the keys and balls by pushing on both stop rings.

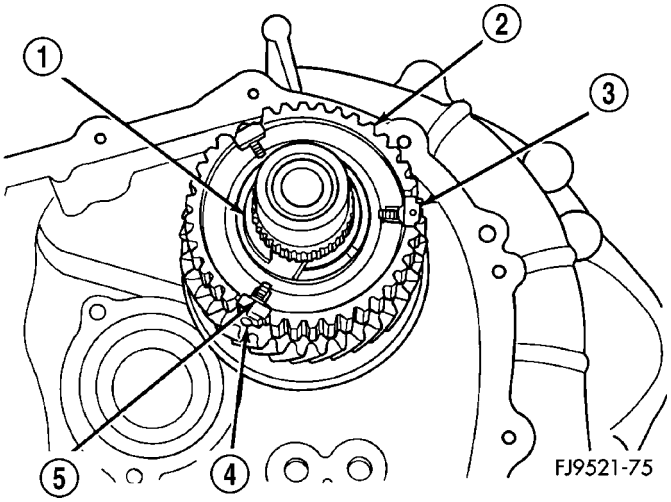

Fig. 167 Keys in Hub

1 - SNAP RING
2 - CLUTCH
3 - KEY
4 - BALL
5 - SPRING

VEHICLE SPEED SENSOR

DESCRIPTION

VEHICLE SPEED SENSOR

The Vehicle Speed Sensor (VSS) is a pulse generator mounted to an adapter near the transmission output shaft. The sensor is driven through the adapter by a speedometer pinion gear. The VSS pulse signal to the speedometer/odometer is monitored by the PCM speed control circuitry to determine vehicle speed and to maintain speed control set speed.

REMOVAL

(1) Raise vehicle on hoist.

(2) Disconnect the speed sensor connector (Fig. 168) .

CAUTION: Clean area around speed sensor before removing to prevent dirt from entering the transaxle during speed sensor removal.

(3) Remove speed sensor retaining bolt (Fig. 168) .

(4) Remove speed sensor from transaxle.

CAUTION: Carefully remove vehicle speed sensor so that sensor drive gear does not fall into transaxle. Should sensor drive gear fall into the transaxle during sensor removal, drive gear must be reattached to sensor.

(5) Remove speed sensor drive gear from speed sensor.

INSTALLATION

(1) Install pinion gear to speed sensor (Fig. 168) .

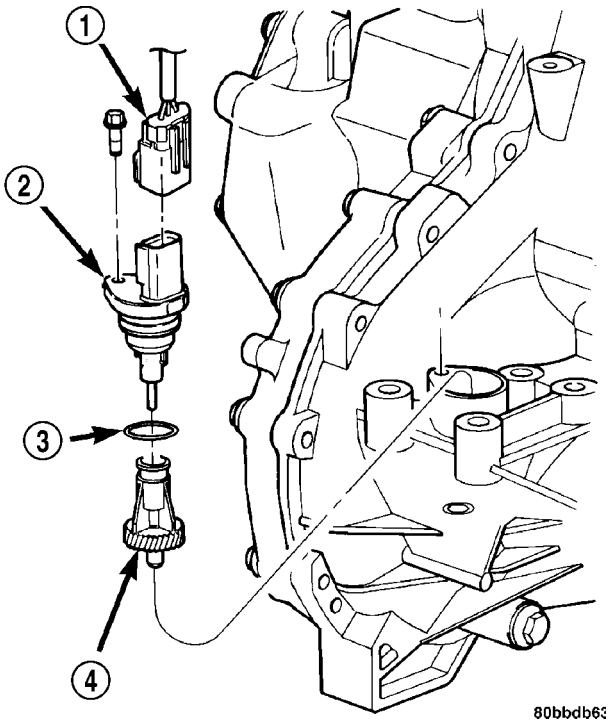

Fig. 168 Speed Sensor and Pinion—Removal/Installation

1 - CONNECTOR
2 - SENSOR
3 - O-RING
4 - SPEEDO PINION

(2) Using a NEW o-ring, install the speed sensor to the transaxle (Fig. 168) .

(3) Install the bolt and torque to 7 N·m (60 in. lbs.).

(4) Connect speed sensor connector (Fig. 168) .

(5) Lower vehicle and road test to verify proper speedometer operation.

41TE AUTOMATIC TRANSAXLE

TABLE OF CONTENTS

page

41TE AUTOMATIC TRANSAXLE
DESCRIPTION 151
OPERATION 153
DIAGNOSIS AND TESTING
DIAGNOSIS AND TESTING - 41TE TRANSAXLE GENERAL DIAGNOSIS 153
DIAGNOSIS AND TESTING - ROAD TEST . . 154
DIAGNOSIS AND TESTING - HYDRAULIC PRESSURE TESTS 154
DIAGNOSIS AND TESTING - CLUTCH AIR PRESSURE TESTS 157
DIAGNOSIS AND TESTING - TORQUE CONVERTER HOUSING FLUID LEAKAGE . . 158
REMOVAL 158
DISASSEMBLY 162
ASSEMBLY 180
INSTALLATION 202
SCHEMATICS AND DIAGRAMS
41TE TRANSAXLE HYDRAULIC SCHEMATICS 203
SPECIFICATIONS 215
SPECIAL TOOLS 217
ACCUMULATOR
DESCRIPTION 223
OPERATION 223
DRIVING CLUTCHES
DESCRIPTION 223
OPERATION 224
FINAL DRIVE
DESCRIPTION 224
OPERATION 224
DISASSEMBLY 225
ASSEMBLY 228
ADJUSTMENTS
DIFFERENTIAL BEARING PRELOAD MEASUREMENT AND ADJUSTMENT 229
FLUID
STANDARD PROCEDURE
FLUID LEVEL AND CONDITION CHECK . . . 231
STANDARD PROCEDURE - FLUID AND FILTER SERVICE 233
GEAR SHIFT CABLE
REMOVAL 234
INSTALLATION 236
ADJUSTMENTS
GEARSHIFT CABLE 237
HOLDING CLUTCHES
DESCRIPTION 238
OPERATION 238

page

INPUT CLUTCH ASSEMBLY
DISASSEMBLY 239
ASSEMBLY 248
OIL PUMP
DESCRIPTION 263
OPERATION 263
DISASSEMBLY 263
ASSEMBLY 264
PLANETARY GEARTRAIN
DESCRIPTION 264
OPERATION 264
SEAL - OIL PUMP
REMOVAL 265
INSTALLATION 265
SHIFT INTERLOCK CABLE
REMOVAL 265
INSTALLATION 267
SHIFT INTERLOCK MECHANISM
REMOVAL 268
INSTALLATION 269
SHIFT INTERLOCK SYSTEM
ADJUSTMENTS
BRAKE/TRANSMISSION SHIFT INTERLOCK SYSTEM 270
SOLENOID/PRESSURE SWITCH ASSY
DESCRIPTION 271
OPERATION 271
REMOVAL 272
INSTALLATION 273
SPEED SENSOR - INPUT
DESCRIPTION 274
OPERATION 274
REMOVAL 275
INSTALLATION 276
SPEED SENSOR - OUTPUT
DESCRIPTION 276
OPERATION 277
REMOVAL 277
INSTALLATION 278
TORQUE CONVERTER
DESCRIPTION 279
OPERATION 283
REMOVAL 284
INSTALLATION 284
TRANSMISSION CONTROL RELAY
DESCRIPTION 285
OPERATION 285
TRANSMISSION RANGE SENSOR
DESCRIPTION 285
OPERATION 286

VALVE BODY
DESCRIPTION 287
OPERATION 287
REMOVAL 288
DISASSEMBLY 291
ASSEMBLY 295
INSTALLATION 300

41TE AUTOMATIC TRANSAXLE

DESCRIPTION

The 41TE (Fig. 1) is a four-speed transaxle that is a conventional hydraulic/mechanical assembly with an integral differential, and is controlled with adaptive electronic controls and monitors. The hydraulic system of the transaxle consists of the transaxle fluid, fluid passages, hydraulic valves, and various line pressure control components. An input clutch assembly which houses the underdrive, overdrive, and reverse clutches is used. It also utilizes separate holding clutches: 2nd/4th gear and Low/Reverse. The primary mechanical components of the transaxle consist of the following:

- Three multiple disc input clutches
- Two multiple disc holding clutches
- Four hydraulic accumulators
- Two planetary gear sets
- Hydraulic oil pump
- Valve body
- Solenoid/Pressure switch assembly
- Integral differential assembly

Control of the transaxle is accomplished by fully adaptive electronics. Optimum shift scheduling is accomplished through continuous real-time sensor feedback information provided to the Powertrain Control Module (PCM) or Transmission Control Module (TCM).

The PCM/TCM is the heart of the electronic control system and relies on information from various direct and indirect inputs (sensors, switches, etc.) to determine driver demand and vehicle operating conditions. With this information, the PCM/TCM can calculate and perform timely and quality shifts through various output or control devices (solenoid pack, transmission control relay, etc.).

The PCM/TCM also performs certain self-diagnostic functions and provides comprehensive information (sensor data, DTC's, etc.) which is helpful in proper diagnosis and repair. This information can be viewed with the DRB scan tool.

41TE AUTOMATIC TRANSAXLE (Continued)

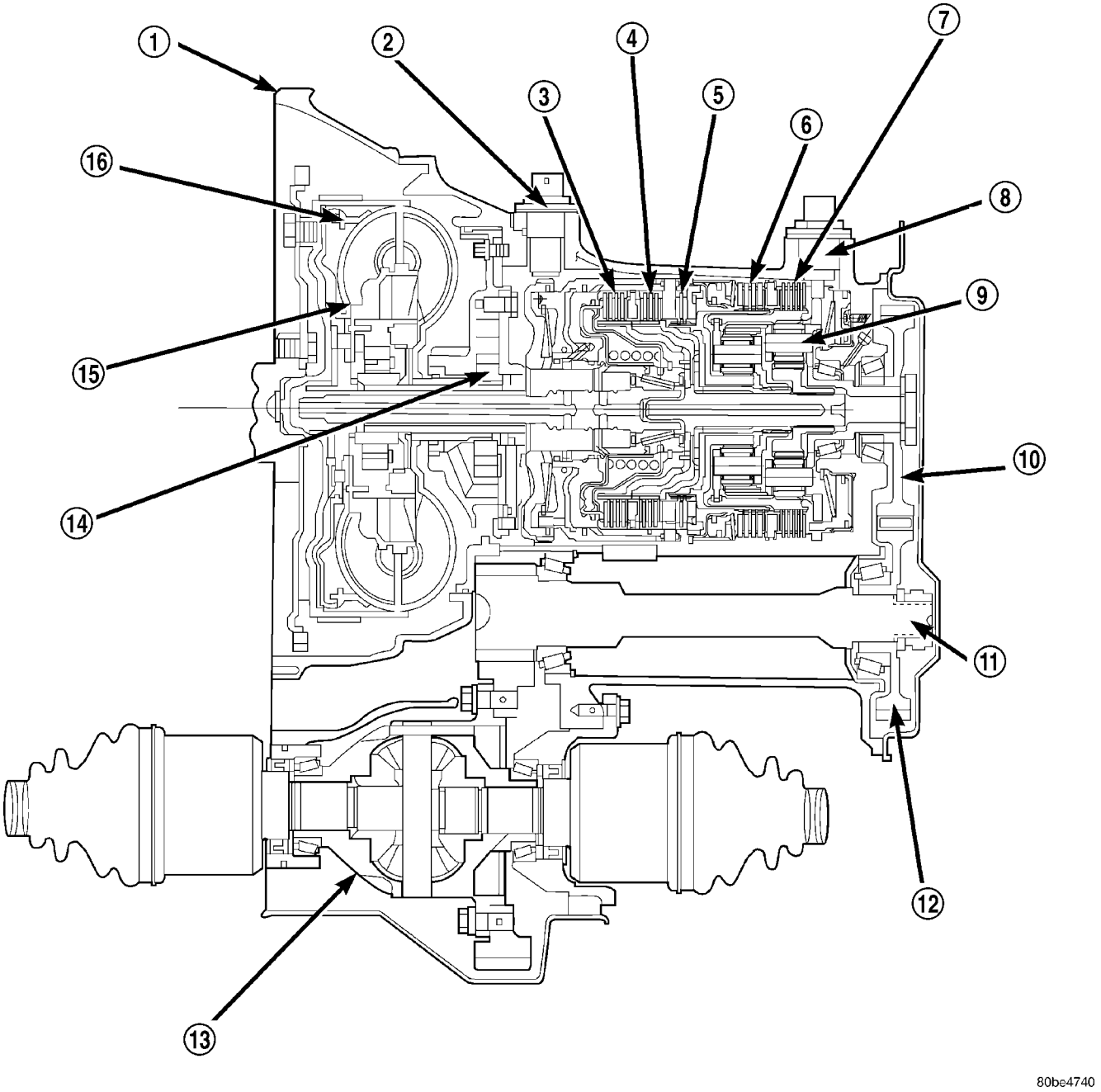

Fig. 1 41TE Transaxle

1 - CASE
2 - INPUT SPEED SENSOR
3 - UNDERDRIVE CLUTCH
4 - OVERDRIVE CLUTCH
5 - REVERSE CLUTCH
6 - 2/4 CLUTCH
7 - LOW/REVERSE CLUTCH
8 - OUTPUT SPEED SENSOR
9 - PLANETARY GEAR SET
10 - OUTPUT SHAFT GEAR
11 - TRANSFER SHAFT
12 - TRANSFER SHAFT GEAR
13 - DIFFERENTIAL
14 - OIL PUMP
15 - TORQUE CONVERTER
16 - TORQUE CONVERTER CLUTCH

41TE AUTOMATIC TRANSAXLE (Continued)

TRANSAXLE IDENTIFICATION

The 41TE transaxle is identified by a barcode label that is fixed to the transaxle case as shown in (Fig. 2).

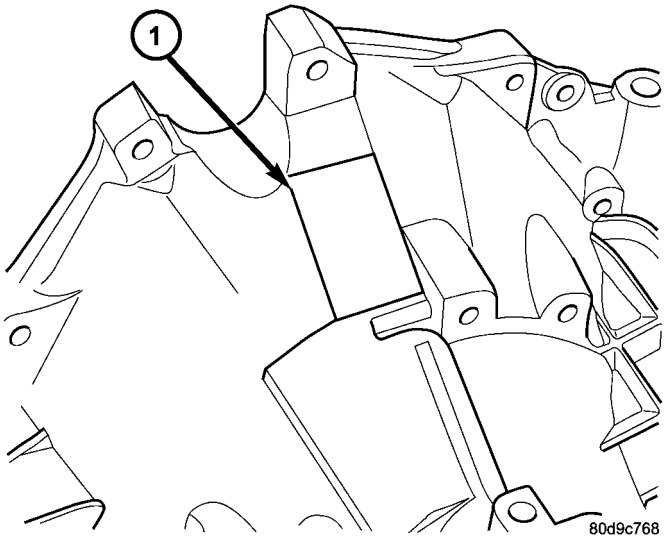

Fig. 2 Transaxle Identification Label

1 - IDENTIFICATION LABEL

The label contains a series of digits that can be translated into useful information such as transaxle part number, date of manufacture, manufacturing origin, plant shift number, build sequence number, etc. Refer to (Fig. 3) for identification label breakdown.

If the tag is not legible or missing, the “PK” number, which is stamped into the transaxle case behind the transfer gear cover, can be referred to for identification. This number differs slightly in that it contains the entire transaxle part number, rather than the last three digits.

OPERATION

Transmission output is directed to an integral differential by a transfer gear system in the following input-to-output ratios:

First	2.84 : 1
Second	1.57 : 1
Third	1.00 : 1
Overdrive	0.69 : 1
Reverse	2.21 : 1

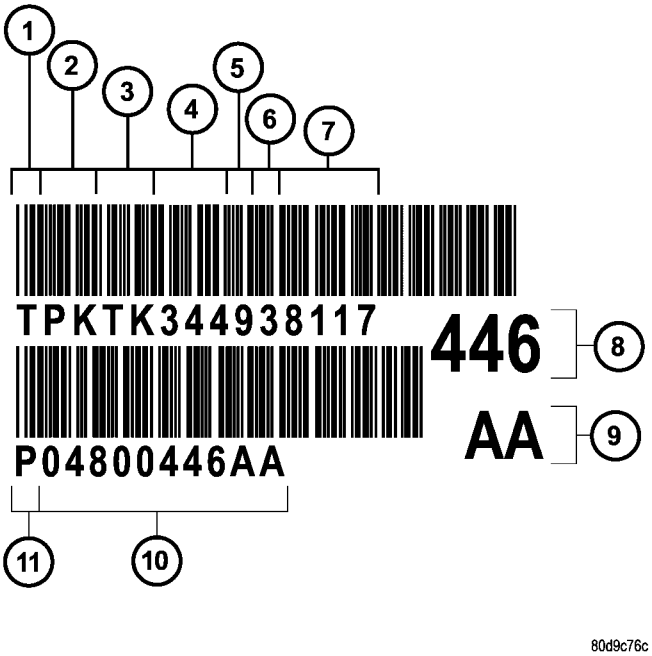

Fig. 3 Identification Label Breakdown

1 - T=TRACEABILITY
2 - SUPPLIER CODE (PK=KOKOMO)
3 - COMPONENT CODE (TK=KOKOMO TRANSMISSION)
4 - BUILD DAY (344=DEC. 9)
5 - BUILD YEAR (9=1999)
6 - LINE/SHIFT CODE (3=3RD SHIFT)
7 - BUILD SEQUENCE NUMBER
8 - LAST THREE OF P/N
9 - NIK
10 - TRANSAXLE PART NUMBER
11 - P=PART NUMBER

DIAGNOSIS AND TESTING

DIAGNOSIS AND TESTING - 41TE TRANSAXLE GENERAL DIAGNOSIS

NOTE: Before attempting any repair on a 41TE four-speed automatic transaxle, check for diagnostic trouble codes (DTC’s) using the DRB scan tool. Refer to the Transmission Diagnostic Procedures Manual.

Transaxle malfunctions may be caused by these general conditions:

- Poor engine performance
- Improper adjustments
- Hydraulic malfunctions
- Mechanical malfunctions
- Electronic malfunctions

Diagnosis of these problems should always begin by checking the easily accessible variables: fluid level and condition, gearshift cable adjustment. Then perform a road test to determine if the problem has been corrected or that more diagnosis is necessary. If the problem persists after the preliminary tests and corrections are completed, hydraulic pressure checks should be performed.

41TE AUTOMATIC TRANSAXLE (Continued)

DIAGNOSIS AND TESTING - ROAD TEST

Prior to performing a road test, verify that the fluid level, fluid condition, and linkage adjustment have been approved.

During the road test, the transaxle should be operated in each position to check for slipping and any variation in shifting.

If the vehicle operates properly at highway speeds, but has poor acceleration, the converter stator overrunning clutch may be slipping. If acceleration is normal, but high throttle opening is needed to maintain highway speeds, the converter stator clutch may have seized. Both of these stator defects require replacement of the torque converter and thorough transaxle cleaning.

Slipping clutches can be isolated by comparing the "Elements in Use" chart with clutch operation encountered on a road test. This chart identifies which clutches are applied at each position of the selector lever.

A slipping clutch may also set a DTC and can be determined by operating the transaxle in all selector positions.

ELEMENTS IN USE AT EACH POSITION OF SELECTOR LEVER

Shift Lever Position	INPUT CLUTCHES			HOLDING CLUTCHES	
	Underdrive	Overdrive	Reverse	2/4	Low/Reverse
P - PARK					X
R - REVERSE			X		X
N - NEUTRAL					X
OD - OVERDRIVE					
First	X				X
Second	X			X	
Direct	X	X			
Overdrive		X		X	
D - DRIVE*					
First	X				X
Second	X			X	
Direct	X	X			
L - LOW*					
First	X				X
Second	X			X	
Direct	X	X			
* Vehicle upshift and downshift speeds are increased when in these selector positions.					

The process of elimination can be used to detect any unit which slips and to confirm proper operation of good units. Road test analysis can diagnose slipping units, but the cause of the malfunction cannot be determined. Practically any condition can be caused by leaking hydraulic circuits or sticking valves.

DIAGNOSIS AND TESTING - HYDRAULIC PRESSURE TESTS

Pressure testing is a very important step in the diagnostic procedure. These tests usually reveal the cause of most hydraulic transaxle problems.

Before performing pressure tests, be certain that fluid level and condition, and shift cable adjustments have been checked and approved. Fluid must be at operating temperature (150 to 200 degrees F.).

Install an engine tachometer, raise vehicle on hoist which allows front wheels to turn, and position tachometer so it can be read.

41TE AUTOMATIC TRANSAXLE (Continued)

Attach 300 psi gauge (C-3293SP) to port(s) required for test(s) being conducted. Use adapter set L-4559 to adapt gauge(s) to transaxle.

Test port locations are shown in (Fig. 4).

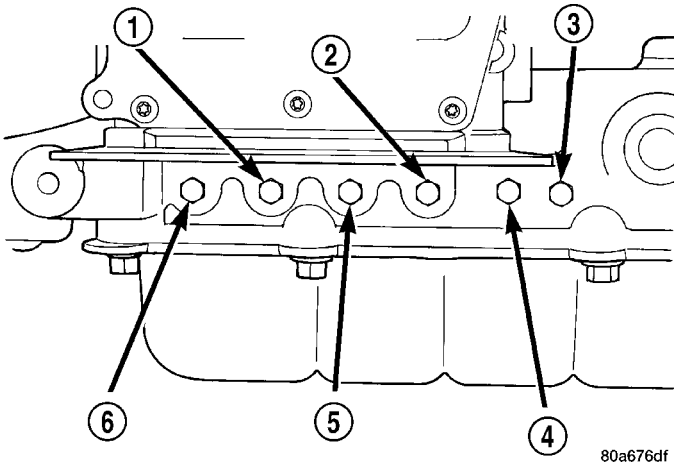

Fig. 4 Pressure Taps

1 - OVERDRIVE CLUTCH
2 - TORQUE CONVERTER OFF
3 - LOW/REVERSE CLUTCH
4 - 2/4 CLUTCH
5 - REVERSE CLUTCH
6 - UNDERDRIVE CLUTCH

TEST ONE-SELECTOR IN LOW (1st GEAR)

(1) Attach pressure gauge to the low/reverse clutch tap.

(2) Move selector lever to the (L) position.

(3) Allow vehicle wheels to turn and increase throttle opening to achieve an indicated vehicle speed to 20 mph.

(4) Low/reverse clutch pressure should read 115 to 145 psi.

(5) This test checks pump output, pressure regulation and condition of the low/reverse clutch hydraulic circuit and shift schedule.

TEST TWO-SELECTOR IN DRIVE (2nd GEAR)

NOTE: This test checks the underdrive clutch hydraulic circuit as well as the shift schedule.

(1) Attach gauge to the underdrive clutch tap.

(2) Move selector lever to the 3 position.

(3) Allow vehicle wheels to turn and increase throttle opening to achieve an indicated vehicle speed of 30 mph.

(4) In second gear the underdrive clutch pressure should read 110 to 145 psi.

TEST TWO A–SELECTOR IN OD (4th Gear)

NOTE: This test checks the underdrive clutch hydraulic circuit as well as the shift schedule.

(1) Attach gauge to the underdrive clutch tap.

(2) Move selector lever to the (OD) position.

(3) Allow wheels to rotate freely and increase throttle opening to achieve an indicated speed of 40 mph.

(4) Underdrive clutch pressure should read below 5 psi. If not, then either the solenoid assembly or PCM/TCM is at fault.

TEST THREE-OVERDRIVE CLUTCH CHECK (3rd and 2nd Gear)

(1) Attach gauge to the overdrive clutch tap.

(2) Move selector lever to the (OD) position.

(3) Allow vehicle wheels to turn and increase throttle opening to achieve an indicated vehicle speed of 20 mph. Vehicle should be in 3rd gear.

(4) Overdrive clutch pressure should read 74 to 95 psi.

(5) Move selector lever to the (3) position and increase indicated vehicle speed to 30 mph.

(6) The vehicle should be in second gear and overdrive clutch pressure should be less than 5 psi.

(7) This test checks the overdrive clutch hydraulic circuit as well as the shift schedule.

TEST FOUR-SELECTOR IN OVERDRIVE (4th Gear)

(1) Attach gauge to the 2/4 clutch tap.

(2) Move selector lever to the (OD) position.

(3) Allow vehicle front wheels to turn and increase throttle opening to achieve an indicated vehicle speed of 30 mph. Vehicle should be in 4th gear.

(4) The 2/4 clutch pressure should read 75 to 95 psi.

(5) This test checks the 2/4 clutch hydraulic circuit.

TEST FIVE-SELECTOR IN OVERDRIVE (4th Gear-CC on)

(1) Attach gauge to the torque converter clutch off pressure tap.

(2) Move selector lever to the (OD) position.

(3) Allow vehicle wheels to turn and increase throttle opening to achieve an indicated vehicle speed of 50 mph. Vehicle should be in 4th gear, CC on.

CAUTION: Both wheels must turn at the same speed.

(4) Torque converter clutch off pressure should be less than 5 psi.

(5) This test checks the torque converter clutch hydraulic circuit.

TEST SIX-SELECTOR IN REVERSE

(1) Attach gauges to the reverse and LR clutch tap.

41TE AUTOMATIC TRANSAXLE (Continued)

(2) Move selector lever to the (R) position.

(3) Read reverse clutch pressure with output stationary (foot on brake) and throttle opened to achieve 1500 rpm.

(4) Reverse and LR clutch pressure should read 165 to 235 psi.

(5) This test checks the reverse clutch hydraulic circuit.

TEST RESULT INDICATIONS

(1) If proper line pressure is found in any one test, the pump and pressure regulator are working properly.

(2) Low pressure in all positions indicates a defective pump, a clogged filter, or a stuck pressure regulator valve.

(3) Clutch circuit leaks are indicated if pressures do not fall within the specified pressure range.

(4) If the overdrive clutch pressure is greater than 5 psi in Step 4 of Test Three, a worn reaction shaft seal ring or a defective solenoid assembly is indicated.

(5) If the underdrive clutch pressure is greater than 5 psi in Step 4 of Test Two A, a defective solenoid assembly or PCM/TCM is the cause.

PRESSURE CHECK SPECIFICATIONS

Gear Selector Position	Pressure Taps						Low/ Reverse Clutch
	Actual Gear	Underdrive Clutch	Overdrive Clutch	Reverse Clutch	Torque Converter Clutch Off	2/4 Clutch	
Park * 0 mph	PARK	0-2	0-5	0-2	60-110	0-2	115-145
REVERSE * 0 mph	REVERSE	0-2	0-7	165-235	50-100	0-2	165-235
NEUTRAL * 0 mph	NEUTRAL	0-2	0-5	0-2	60-110	0-2	115-145
L # 20 mph	FIRST	110-145	0-5	0-2	60-110	0-2	115-145
3 # 30 mph	SECOND	110-145	0-5	0-2	60-110	115-145	0-2
3 # 45 mph	DIRECT	75-95	75-95	0-2	60-90	0-2	0-2
OD # 30 mph	OVERDRIVE	0-2	75-95	0-2	60-90	75-95	0-2
OD # 50 mph	OVERDRIVE WITH TCC	0-2	75-95	0-2	0-5	75-95	0-2

*** Engine speed at 1500 rpm**

 # CAUTION: Both front wheels must be turning at the same speed.

41TE AUTOMATIC TRANSAXLE (Continued)

DIAGNOSIS AND TESTING - CLUTCH AIR PRESSURE TESTS

Inoperative clutches can be located using a series of tests by substituting air pressure for fluid pressure (Fig. 5) (Fig. 6). The clutches may be tested by applying air pressure to their respective passages. The valve body must be removed and Tool 6056 installed. To make air pressure tests, proceed as follows:

NOTE: The compressed air supply must be free of all dirt and moisture. Use a pressure of 30 psi.

Remove oil pan and valve body. See Valve body removal.

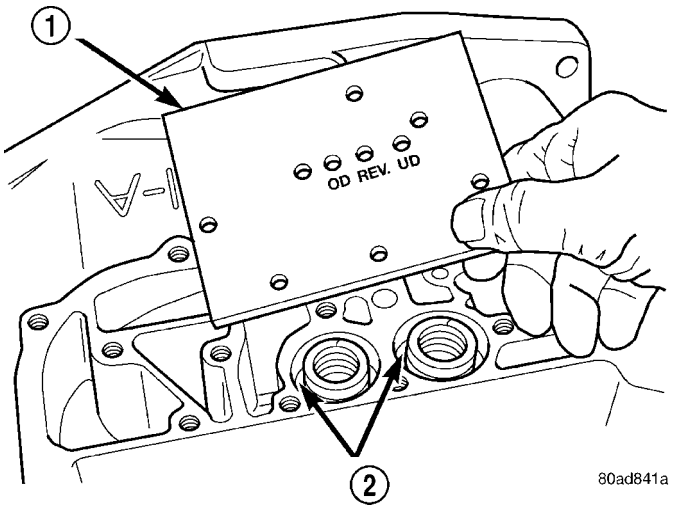

Fig. 5 Air Pressure Test Plate

1 - TOOL 6056
2 - ACCUMULATORS

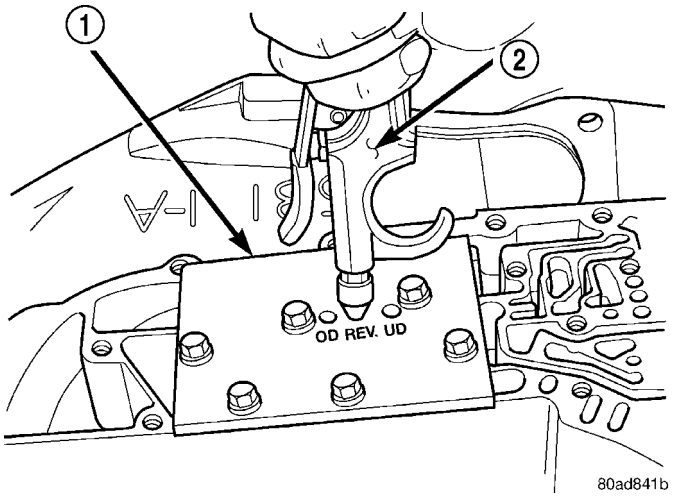

Fig. 6 Testing Reverse Clutch

1 - TOOL 6056
2 - AIR NOZZLE

OVERDRIVE CLUTCH

Apply air pressure to the overdrive clutch apply passage and watch for the push/pull piston to move forward. The piston should return to its starting position when the air pressure is removed.

REVERSE CLUTCH

Apply air pressure to the reverse clutch apply passage and watch for the push/pull piston to move rearward. The piston should return to its starting position when the air pressure is removed.

2/4 CLUTCH

Apply air pressure to the feed hole located on the 2/4 clutch retainer. Look in the area where the 2/4 piston contacts the first separator plate and watch carefully for the 2/4 piston to move rearward. The piston should return to its original position after the air pressure is removed.

LOW/REVERSE CLUTCH

Apply air pressure to the low/reverse clutch feed hole (rear of case, between 2 bolt holes). Then, look in the area where the low/reverse piston contacts the first separator plate. Watch carefully for the piston to move forward. The piston should return to its original position after the air pressure is removed.

UNDERDRIVE CLUTCH

Because this clutch piston cannot be seen, its operation is checked by function. Air pressure is applied to the low/reverse and the 2/4 clutches. This locks the output shaft. Use a piece of rubber hose wrapped around the input shaft and a pair of clamp-on pliers to turn the input shaft. Next apply air pressure to the underdrive clutch. The input shaft should not rotate with hand torque. Release the air pressure and confirm that the input shaft will rotate.

41TE AUTOMATIC TRANSAXLE (Continued)

DIAGNOSIS AND TESTING - TORQUE CONVERTER HOUSING FLUID LEAKAGE

When diagnosing converter housing fluid leaks, three actions must be taken before repair:

(1) Verify proper transmission fluid level.

(2) Verify that the leak originates from the converter housing area and is transmission fluid.

(3) Determine the true source of the leak.

Fluid leakage at or around the torque converter area may originate from an engine oil leak (Fig. 7). The area should be examined closely. Factory fill fluid is red and, therefore, can be distinguished from engine oil.

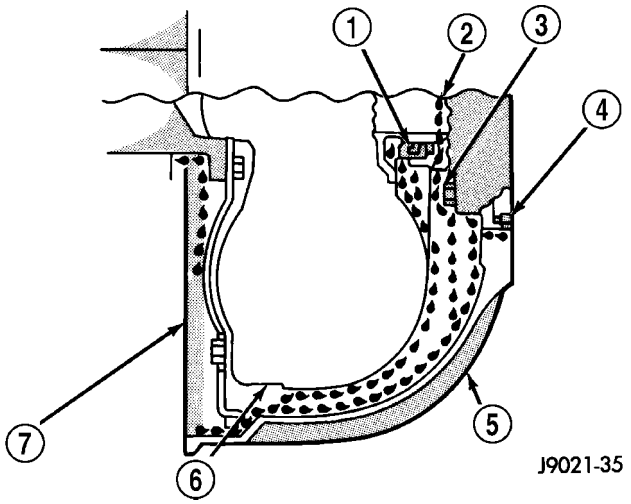

Fig. 7 Converter Housing Leak Paths

1 - PUMP SEAL
2 - PUMP VENT
3 - PUMP BOLT
4 - PUMP GASKET
5 - CONVERTER HOUSING
6 - CONVERTER
7 - REAR MAIN SEAL LEAK

Some suspected converter housing fluid leaks may not be leaks at all. They may only be the result of residual fluid in the converter housing, or excess fluid spilled during factory fill, or fill after repair. Converter housing leaks have several potential sources. Through careful observation, a leak source can be identified before removing the transmission for repair.

Pump seal leaks tend to move along the drive hub and onto the rear of the converter (Fig. 7). Pump o-ring or pump body leaks follow the same path as a seal leak. Pump attaching bolt leaks are generally deposited on the inside of the converter housing and not on the converter itself. Pump seal or gasket leaks usually travel down the inside of the converter housing (Fig. 7).

TORQUE CONVERTER LEAKAGE

Possible sources of torque converter leakage are:

- Torque converter weld leaks at the outside diameter weld (Fig. 8).
- Torque converter hub weld (Fig. 8).

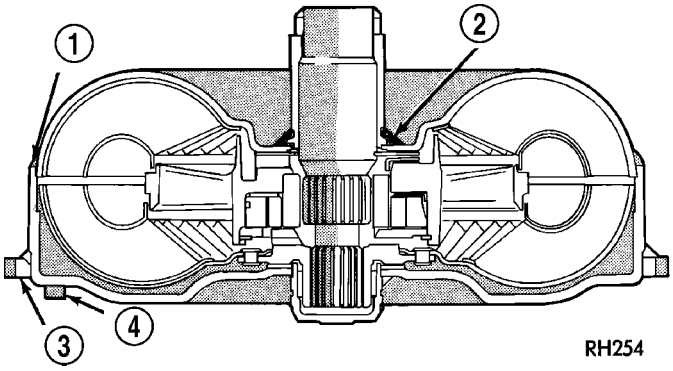

Fig. 8 Converter Leak Points - Typical

1 - OUTSIDE DIAMETER WELD
2 - TORQUE CONVERTER HUB WELD
3 - STARTER RING GEAR
4 - LUG

REMOVAL

(1) Disconnect battery cables.

(2) Remove air cleaner assembly (Fig. 9).

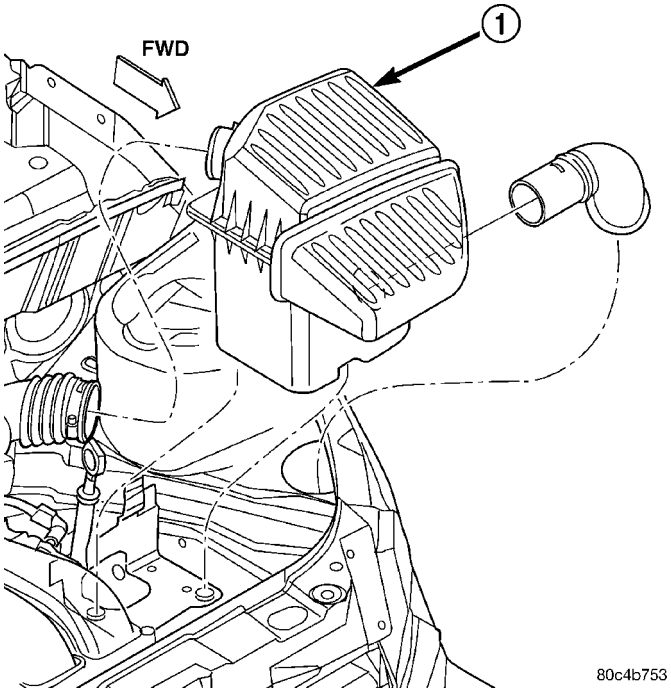

Fig. 9 Air Cleaner Assembly Removal/Installation

1 - AIR CLEANER ASSEMBLY

41TE AUTOMATIC TRANSAXLE (Continued)

(3) Remove battery (Fig. 10).

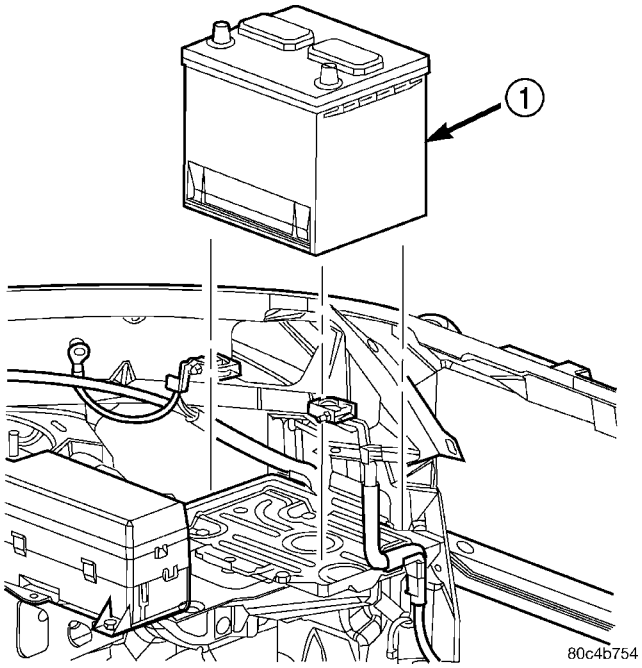

Fig. 10 Battery Removal/Installation

1 - BATTERY

(4) Remove battery tray (Fig. 11).

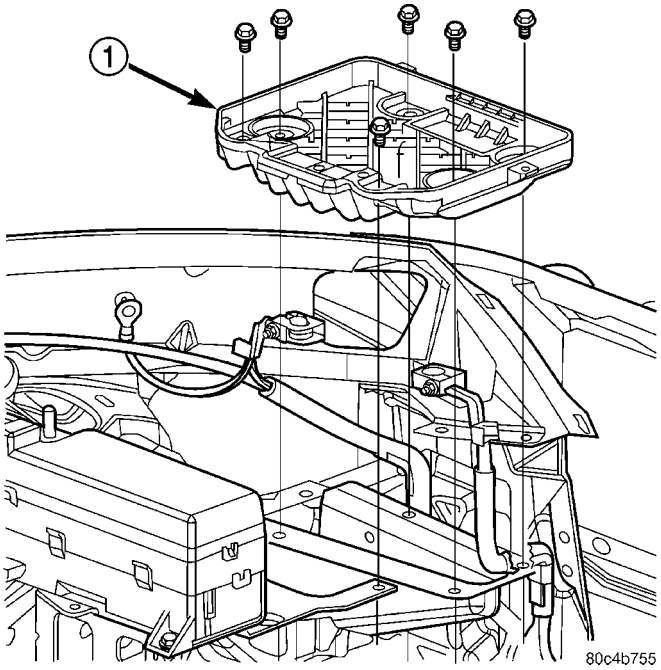

Fig. 11 Battery Tray Removal/Installation

1 - BATTERY TRAY

(5) Remove uppermost starter-to-transaxle bell-housing bolt and remove transaxle dipstick & tube. Plug hole to prevent debris from entering transaxle.

(6) Disconnect gearshift cable from manual valve lever. Remove gearshift cable from trans mount bracket and position cable out of the way.

(7) Disconnect cooler lines at transaxle and plug holes to prevent debris from entering transaxle.

(8) Disconnect input speed sensor connector (Fig. 12).

(9) Disconnect output speed sensor connector (Fig. 12).

(10) Disconnect transmission range sensor connector (Fig. 12).

(11) Disconnect solenoid/pressure switch assembly connector (Fig. 12).

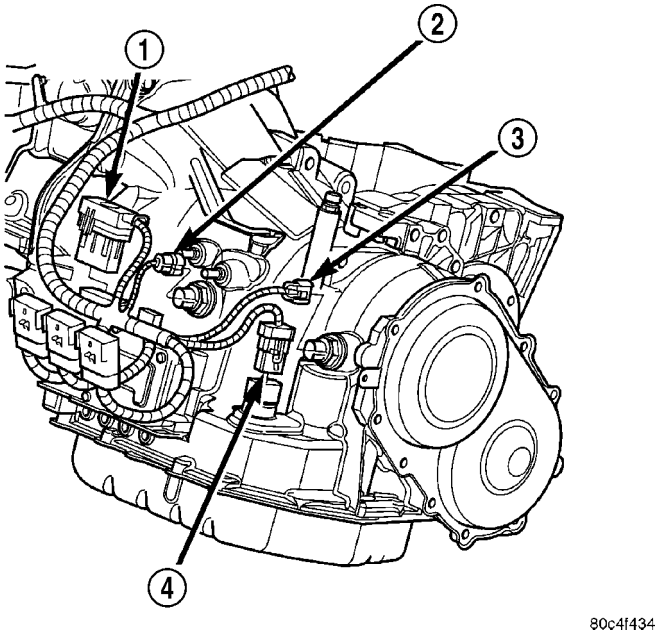

Fig. 12 Component Connector Location

1 - SOLENOID/PRESSURE SWITCH ASSY. CONNECTOR
2 - INPUT SPEED SENSOR CONNECTOR
3 - OUTPUT SPEED SENSOR CONNECTOR
4 - TRANSMISSION RANGE SENSOR CONNECTOR

(12) Raise vehicle on hoist.

(13) Remove front wheel covers (if equipped) and front wheel/tire assemblies.

(14) Remove left splash shield.

(15) Remove left and right halfshaft assemblies. Refer to DIFFERENTIAL AND DRIVELINE for proper procedures.

41TE AUTOMATIC TRANSAXLE (Continued)

(16) Disconnect power steering hose from structural collar (Fig. 13)

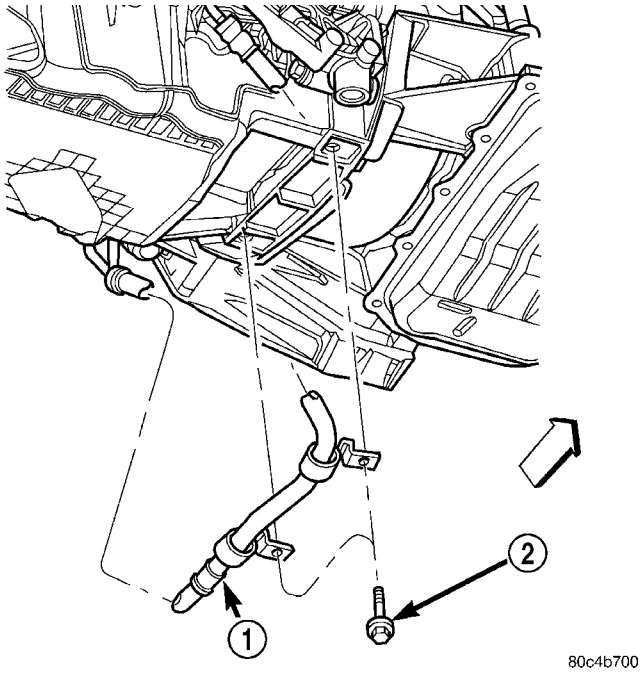

Fig. 13 Power Steering Hose to Structural Collar

1 - POWER STEERING HOSE
2 - BOLT

(17) Remove the left engine-to-transaxle lateral bending brace and structural collar (Fig. 14).

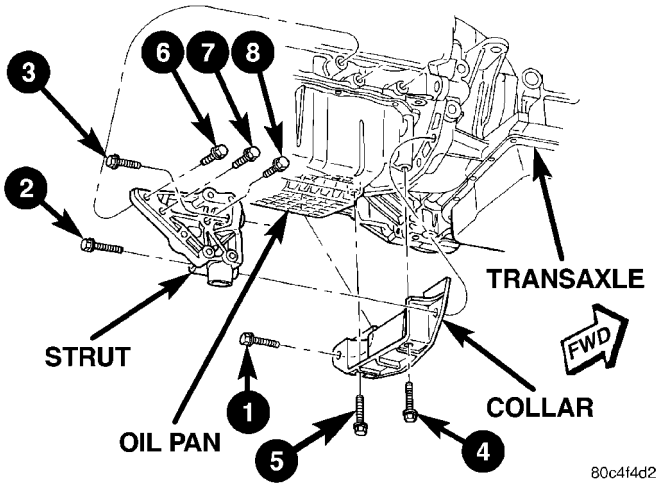

Fig. 14 Left Lateral Bending Brace and Structural

(18) Remove bellhousing dust cover (Fig. 15).

(19) Remove the right engine-to-transaxle lateral bending brace (Fig. 16).

(20) Disconnect starter motor electrical connections.

(21) Remove starter motor (Fig. 17).

(22) Remove lower starter-to-transaxle bellhousing lower bolt and position starter motor out of the way.

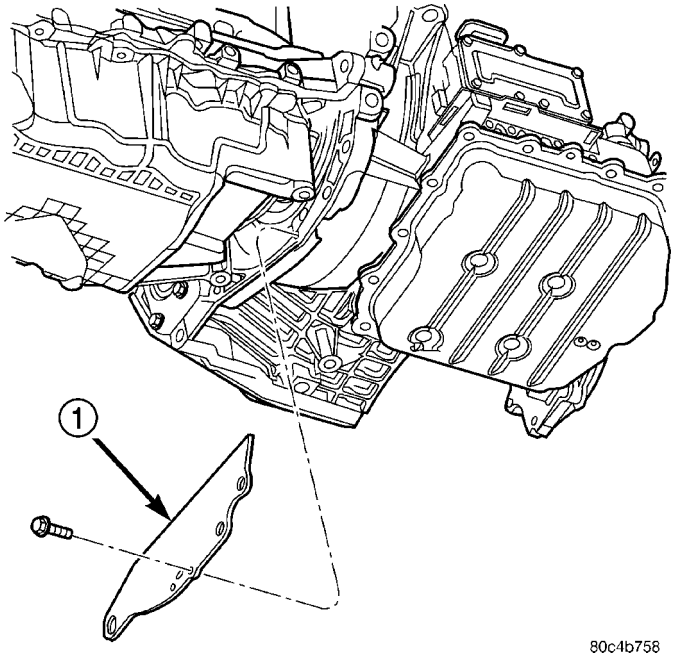

Fig. 15 Bellhousing Dust Cover Removal/Installation

1 - DUST COVER (IF EQUIPPED)

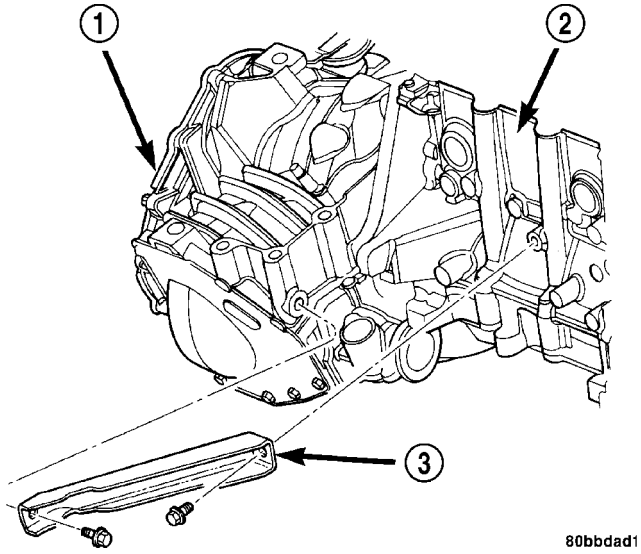

Fig. 16 Right Lateral Bending Brace Removal/ Installation—Typical

1 - TRANSAXLE
2 - ENGINE
3 - LATERAL BENDING BRACE

(23) Remove gearshift cable bracket. Position cable out of the way.

(24) Remove four drive plate-to-torque converter bolts.

(25) Support engine assembly with screw jack and wood block.

(26) Remove transmission upper mount to bracket bolts (Fig. 18).

41TE AUTOMATIC TRANSAXLE (Continued)

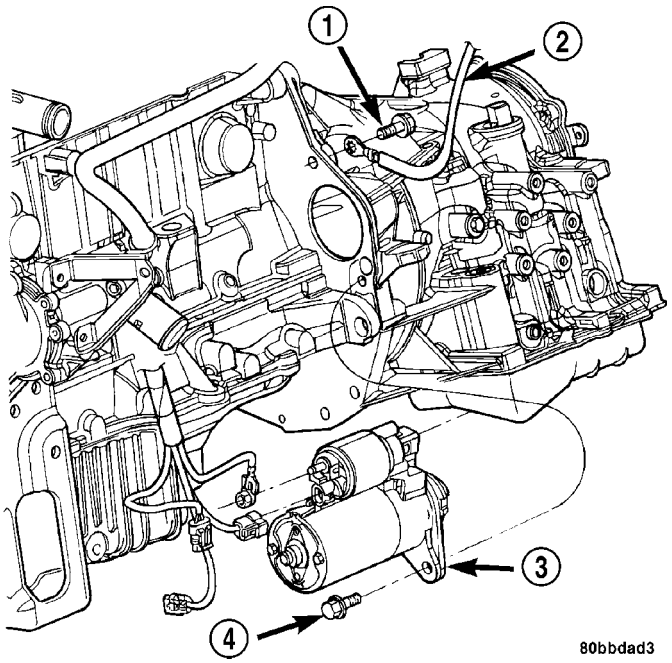

Fig. 17 Starter Motor Removal/Installation—Typical

1 - BOLT
2 - GROUND
3 - STARTER
4 - BOLT

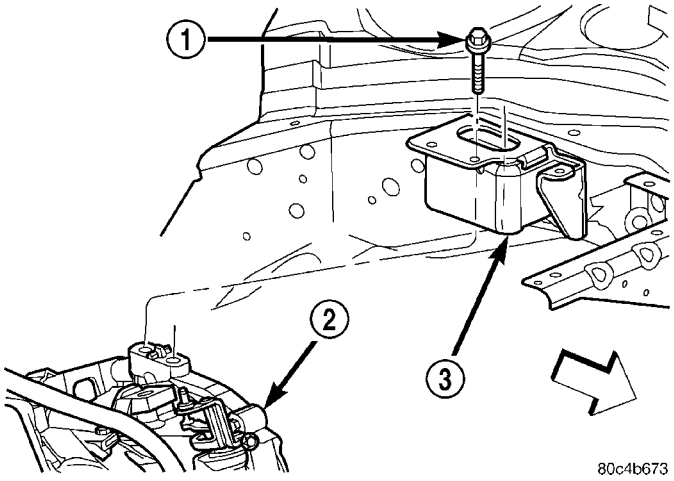

Fig. 18 Transaxle Upper Mount

1 - BOLT
2 - TRANSAXLE
3 - LEFT MOUNT

(27) Lower engine/transaxle to gain access to and remove transaxle-to-engine bolts (Fig. 19).

(28) Remove transaxle from vehicle.

(29) If replacing transaxle, remove upper mount bracket and gearshift cable bracket and transfer to new/replacement transaxle.

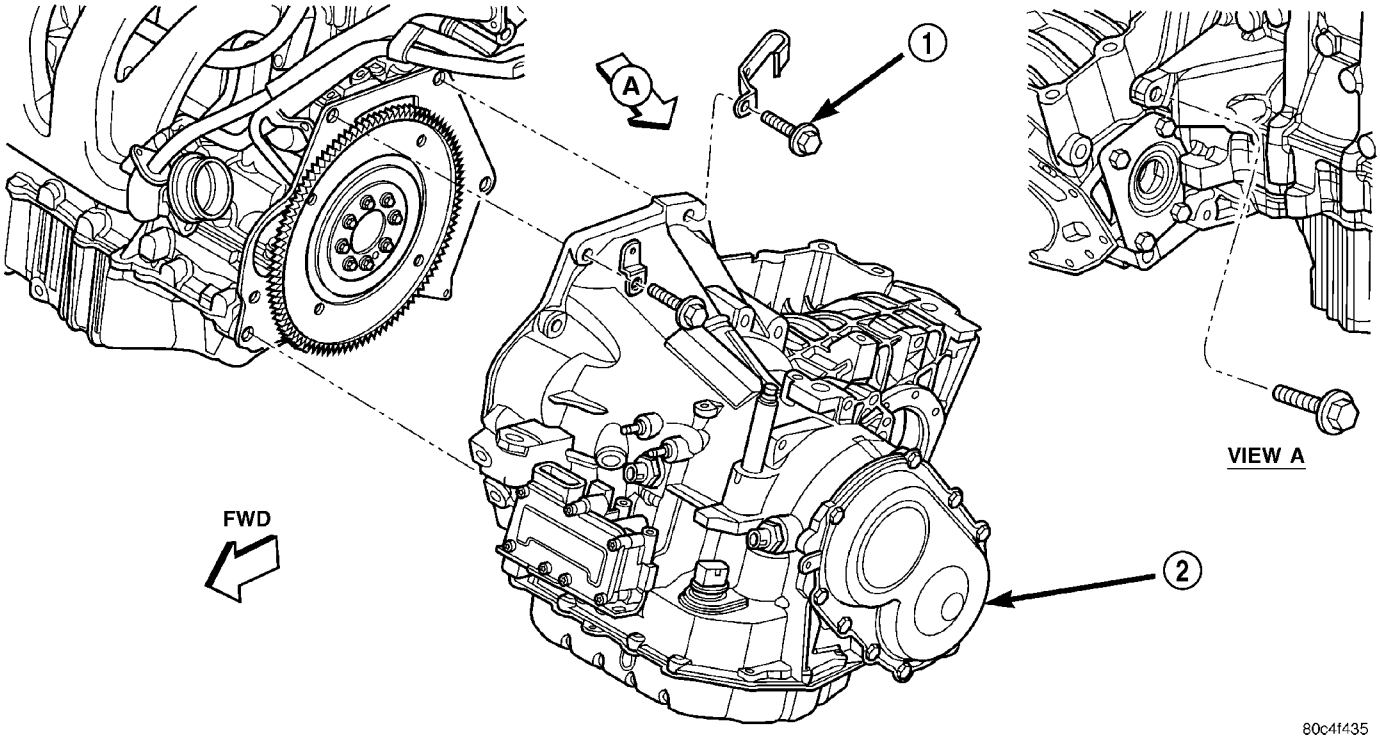

Fig. 19 Transaxle Removal/Installation

1 - BOLT (3)
2 - TRANSAXLE

41TE AUTOMATIC TRANSAXLE (Continued)

DISASSEMBLY

NOTE: If transaxle is being overhauled (clutch and/or seal replacement) or replaced, it is necessary to perform the PCM/TCM Quick Learn Procedure. (Refer to 8 - ELECTRICAL/ELECTRONIC CONTROL MODULES/POWERTRAIN/TRANSMISSION CONTROL MODULE - STANDARD PROCEDURE)

NOTE: This procedure does not include final drive (differential) disassembly.

(1) Remove input and output speed sensors.
(2) Remove three (3) solenoid/pressure switch assembly-to-case bolts.
(3) Remove solenoid/pressure switch assembly and gasket (Fig. 20).

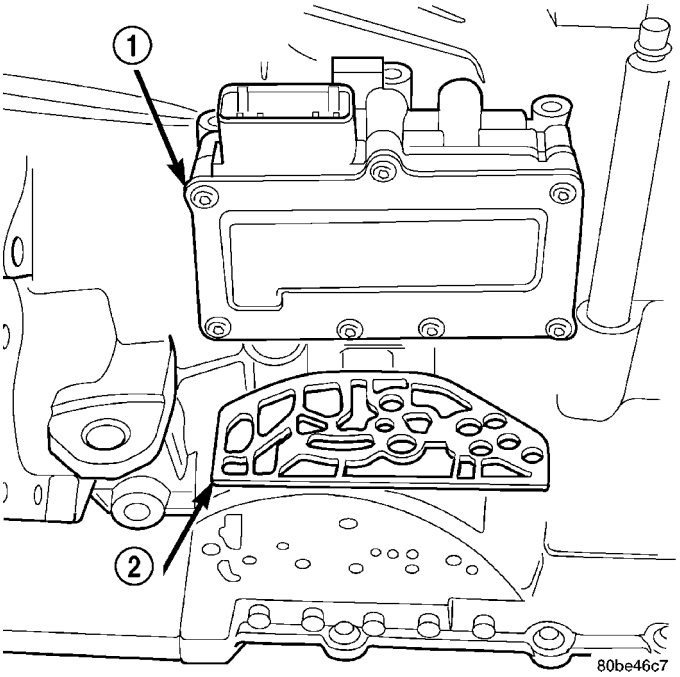

Fig. 20 Solenoid/Pressure Switch Assembly and Gasket

1 - SOLENOID/PRESSURE SWITCH ASSEMBLY
2 - GASKET

(4) Remove oil pan-to-case bolts (Fig. 21).
(5) Remove oil pan (Fig. 22).

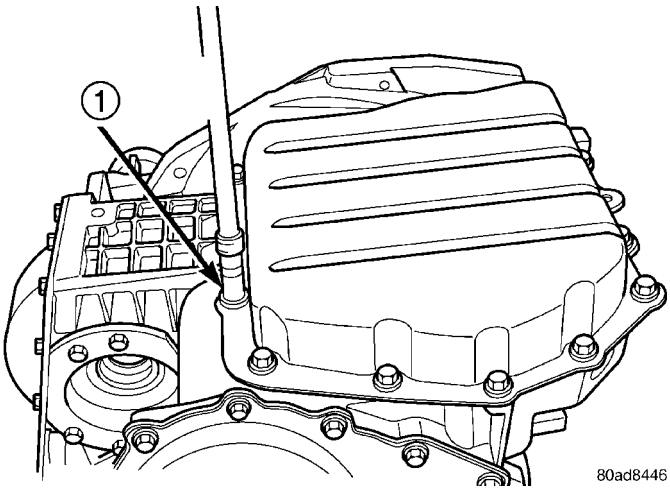

Fig. 21 Remove Oil Pan Bolts

1 - OIL PAN BOLTS (USE RTV UNDER BOLT HEADS)

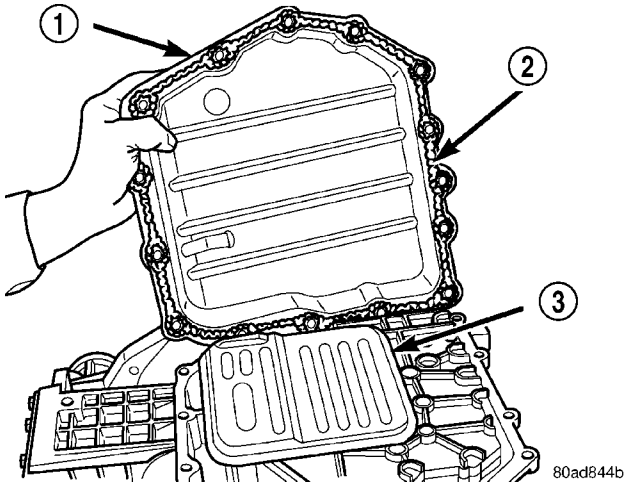

Fig. 22 Remove Oil Pan

1 - OIL PAN
2 - 1/8 INCH BEAD OF MOPAR® ATF RTV (MS-GF41)
3 - OIL FILTER

41TE AUTOMATIC TRANSAXLE (Continued)

(6) Remove oil filter (Fig. 23).

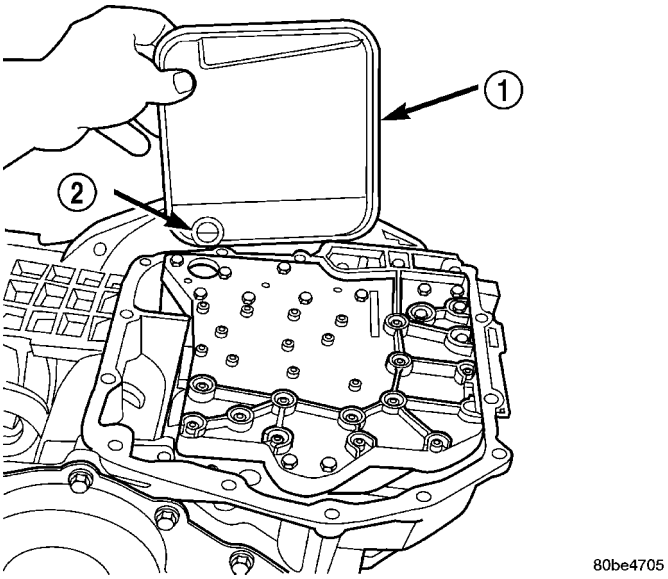

Fig. 23 Remove Oil Filter

1 - OIL FILTER
2 - O-RING

(7) Turn manual valve fully clock-wise to get park rod into position for removal.

(8) Remove valve body-to-case bolts (Fig. 24).

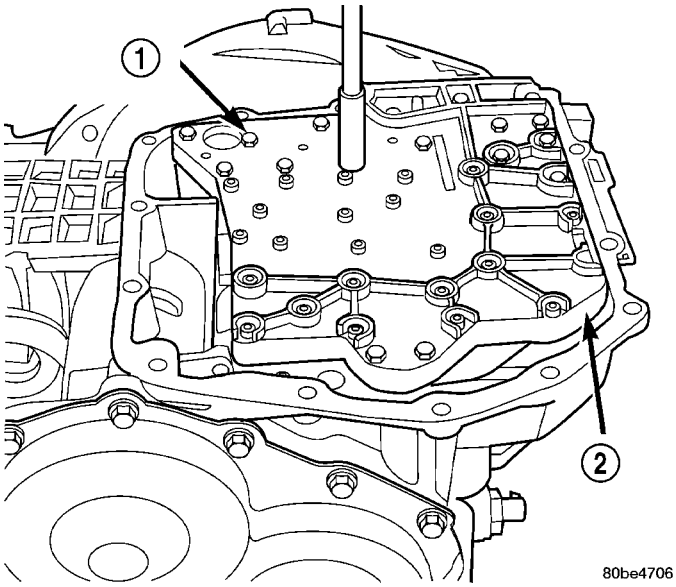

Fig. 24 Remove Valve Body Attaching Bolts

1 - VALVE BODY ATTACHING BOLTS (18)
2 - VALVE BODY

CAUTION: Do not handle the valve body assembly from the manual valve. Damage can result.

(9) Using a screwdriver, push park rod rollers away from guide bracket (Fig. 25) and remove valve body assembly (Fig. 26).

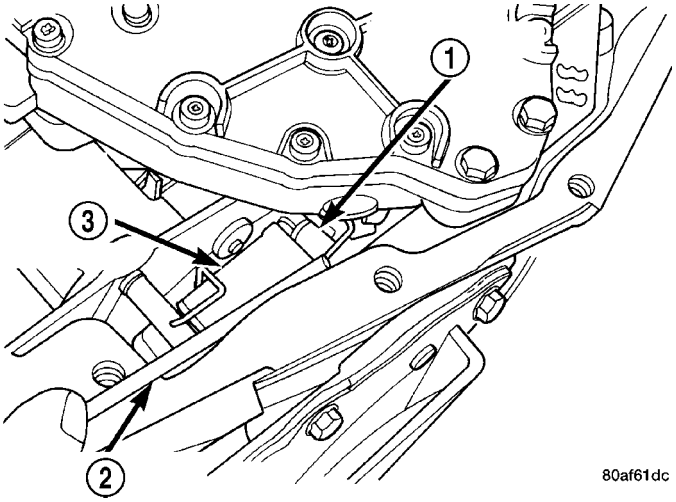

Fig. 25 Push Park Rod Rollers from Guide Bracket

1 - PARK SPRAG ROLLERS
2 - SCREWDRIVER
3 - PARK SPRAG GUIDE BRACKET

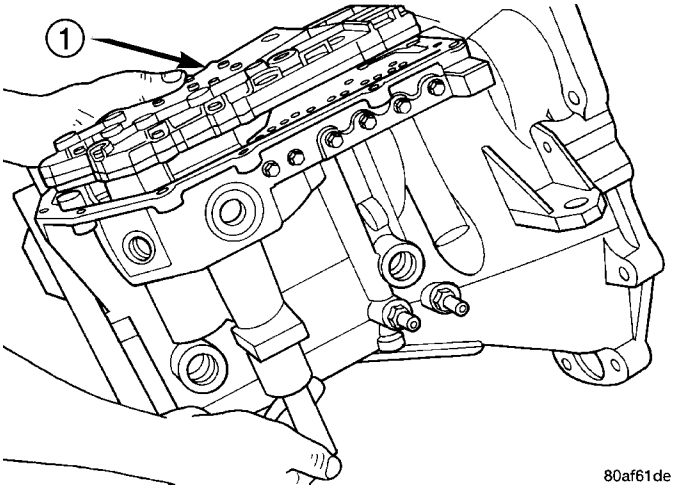

Fig. 26 Remove Valve Body

1 - VALVE BODY

NOTE: Depending on engine application, some accumulators will have two springs and others will have one spring. The springs are color-coded according to application and year. When disassembling, mark accumulator spring location to ease assembly.

41TE AUTOMATIC TRANSAXLE (Continued)

(10) Remove underdrive and overdrive accumulators (Fig. 27) (Fig. 28) (Fig. 29).

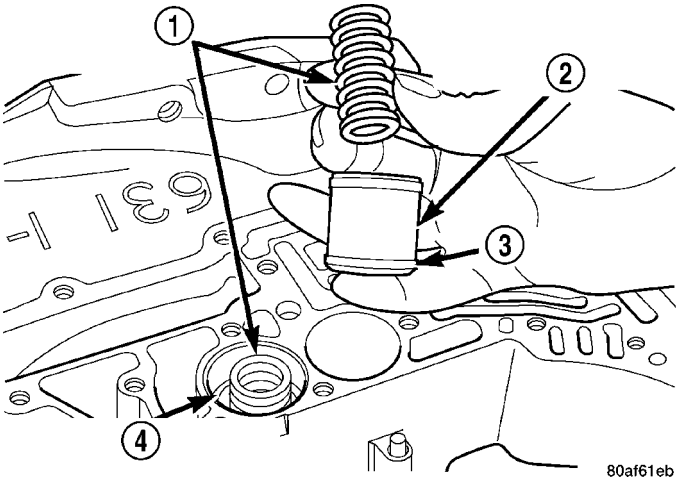

Fig. 27 Remove Underdrive and Overdrive Accumulators

1 - RETURN SPRING
2 - UNDERDRIVE CLUTCH ACCUMULATOR
3 - SEAL RING (2)
4 - OVERDRIVE CLUTCH ACCUMULATOR

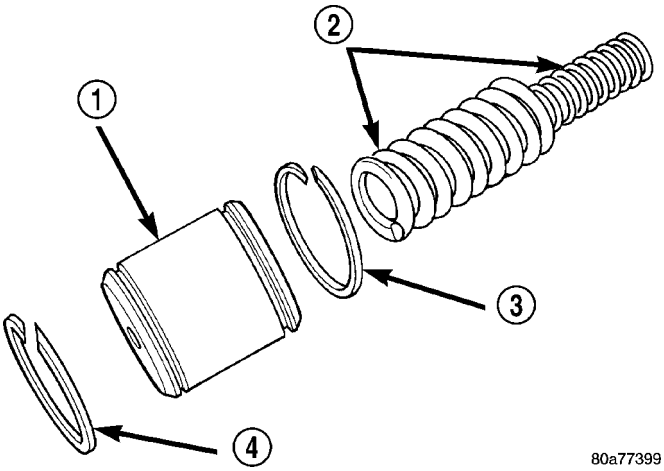

Fig. 28 Accumulator (Underdrive)

1 - ACCUMULATOR PISTON (UNDERDRIVE)
2 - RETURN SPRINGS
3 - SEAL RING
4 - SEAL RING

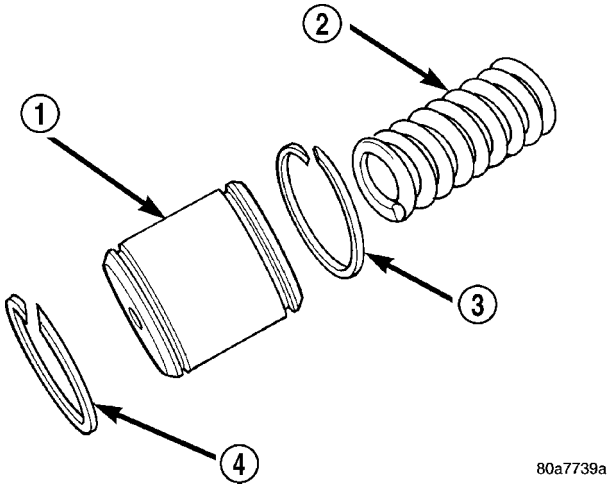

Fig. 29 Accumulator (Overdrive)

1 - ACCUMULATOR PISTON (OVERDRIVE)
2 - RETURN SPRING
3 - SEAL RING
4 - SEAL RING

(11) Remove low/reverse accumulator snap ring (Fig. 30).

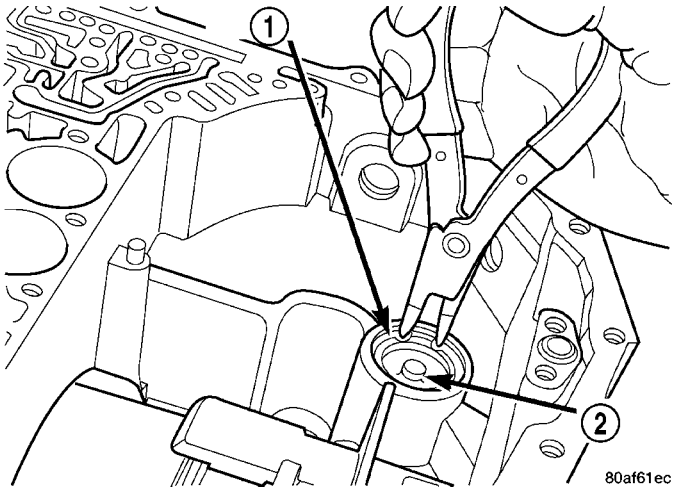

Fig. 30 Remove Low/Reverse Accumulator Snap Ring

1 - SNAP RING
2 - PLUG

41TE AUTOMATIC TRANSAXLE (Continued)

(12) Remove low/reverse accumulator plug (Fig. 31).

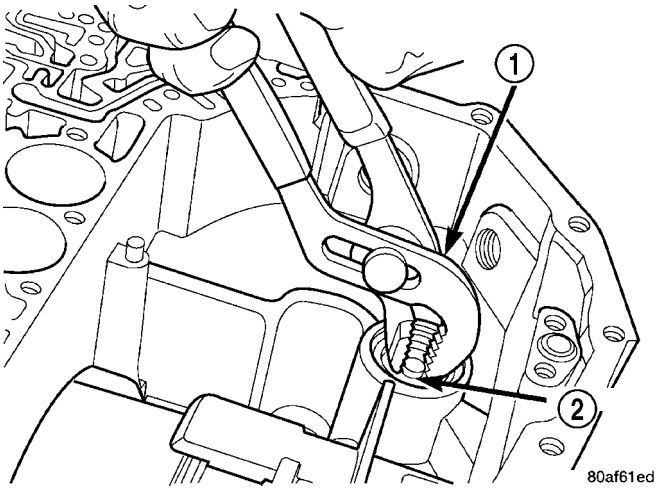

Fig. 31 Remove Low/Reverse Accumulator Plug (Cover)

1 - ADJUSTABLE PLIERS
2 - PLUG

(13) Remove low/reverse accumulator piston using petrolatum and a suitable tool (Fig. 32).

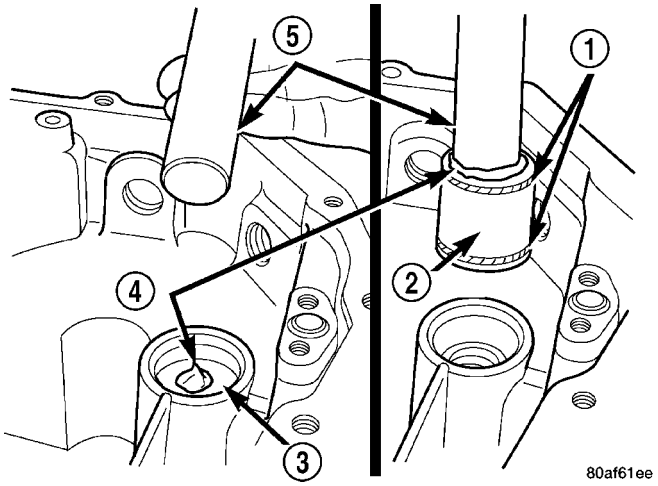

Fig. 32 Remove Low/Reverse Accumulator Piston

1 - SEAL RINGS
2 - PISTON
3 - PISTON
4 - PETROLATUM
5 - SUITABLE TOOL

(14) Remove low/reverse accumulator (Fig. 33).

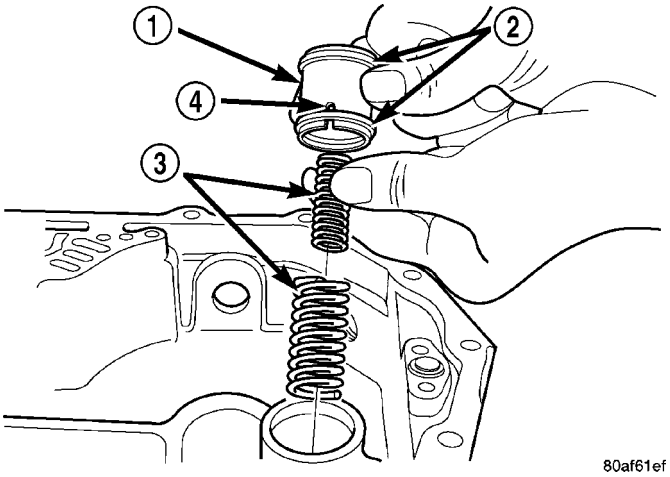

Fig. 33 Remove Low/Reverse Accumulator

1 - ACCUMULATOR PISTON
2 - SEAL RINGS
3 - RETURN SPRINGS
4 - (NOTE NOTCH)

(15) Measure input shaft end play. Place transaxle so input shaft is vertical. Set up end play set and dial indicator as shown in (Fig. 34). **Input shaft end play should be within 0.13-0.64 mm (0.005-0.025 in.)** If outside of this range, a #4 thrust plate change is required. Record indicator reading for reference upon reassembly.

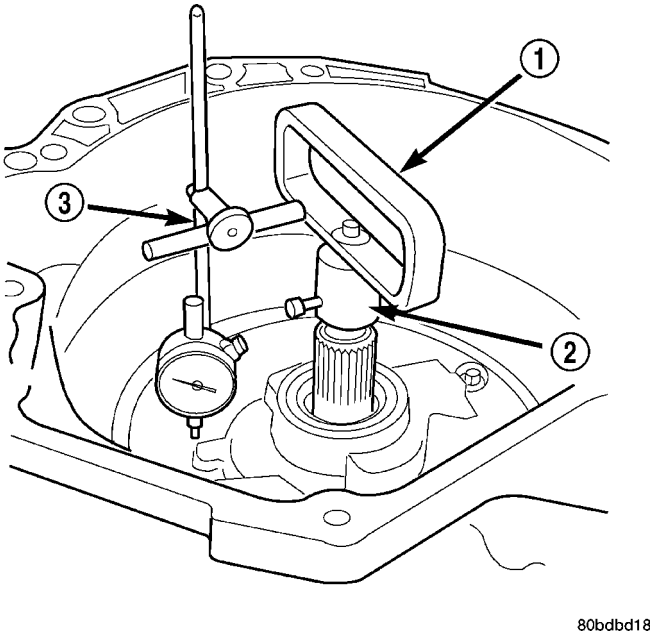

Fig. 34 Measure Input Shaft End Play Using End Play Set 8266

1 - TOOL 8266–8
2 - TOOL 8266–2
3 - TOOL C-3339

41TE AUTOMATIC TRANSAXLE (Continued)

(16) Remove oil pump-to-case bolts (Fig. 35).

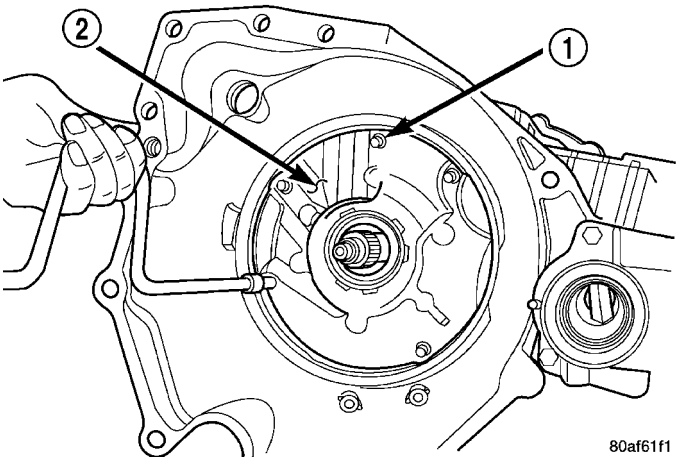

Fig. 35 Remove Pump Attaching Bolts

1 - PUMP ATTACHING BOLTS
2 - PUMP HOUSING

CAUTION: Be sure input speed sensor is removed before removing oil pump.

(17) Install pullers Tool C-3752 as shown in (Fig. 36).

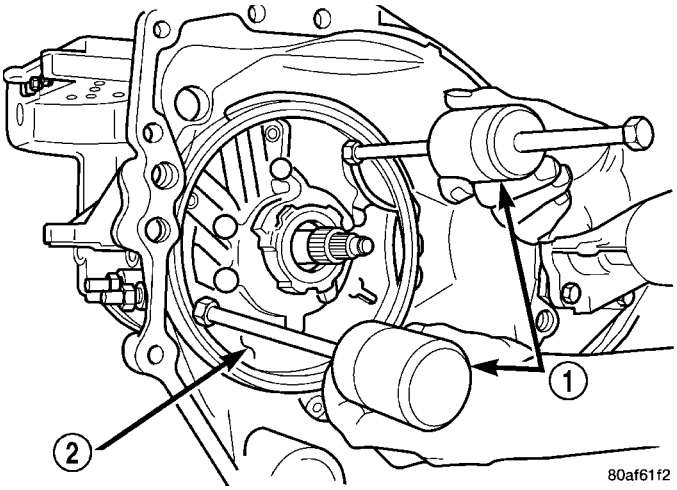

Fig. 36 Install Tool C-3752

1 - PULLERS TOOL C-3752
2 - PUMP

(18) Remove oil pump assembly (Fig. 37) (Fig. 38).

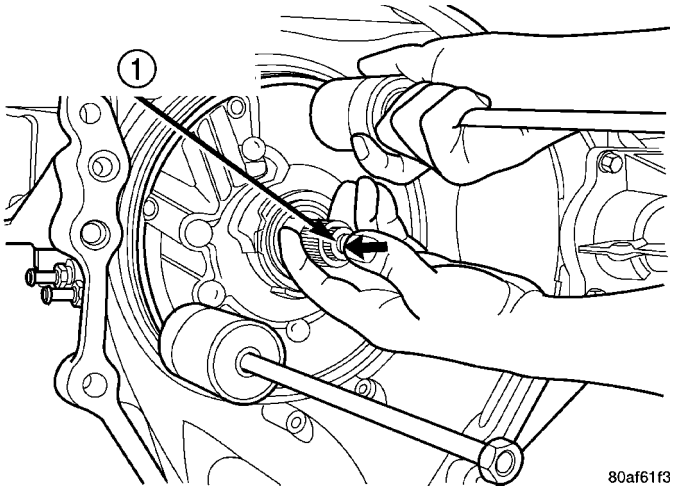

Fig. 37 Remove Oil Pump

1 - “PUSH IN” ON INPUT SHAFT WHILE REMOVING PUMP

(19) Remove oil pump gasket (Fig. 39).

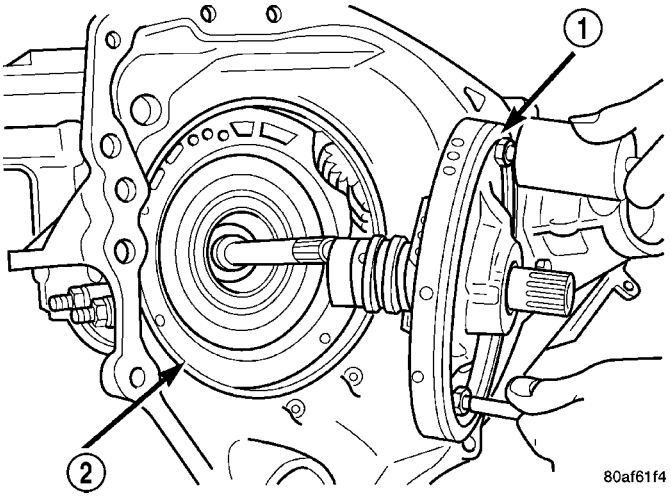

Fig. 38 Oil Pump Removed

1 - OIL PUMP
2 - GASKET

CAUTION: If transaxle failure has occurred, the cooler bypass valve must be replaced. Do not re-use or attempt to clean valve.

41TE AUTOMATIC TRANSAXLE (Continued)

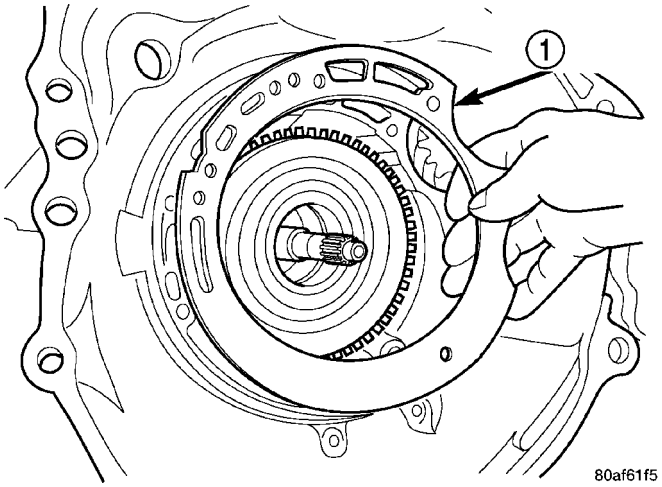

Fig. 39 Remove Oil Pump Gasket

1 - PUMP GASKET

(20) Remove cooler bypass valve (Fig. 40).

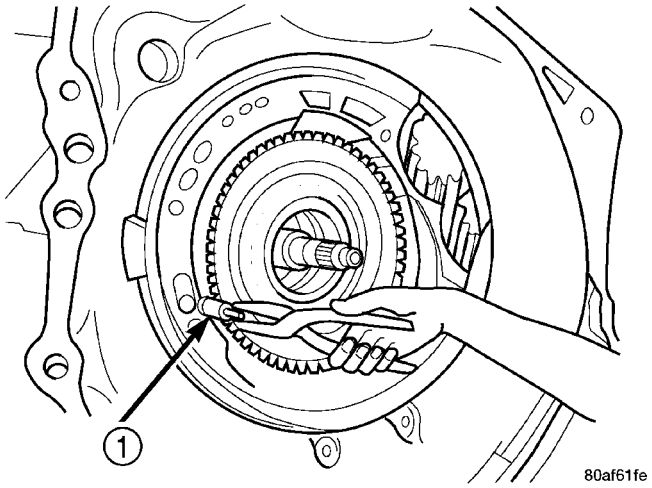

Fig. 40 Remove Bypass Valve

1 - COOLER BYPASS VALVE

(21) Remove #1 needle bearing (Fig. 41).

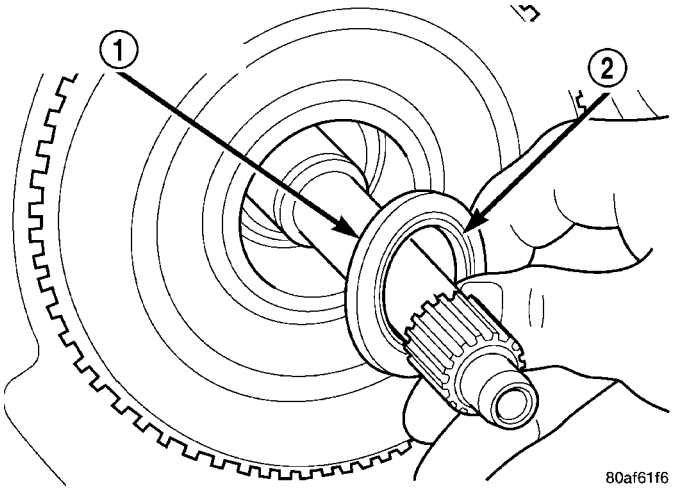

Fig. 41 Remove Caged Needle Bearing

1 - #1 CAGED NEEDLE BEARING
2 - NOTE: TANGED SIDE OUT

(22) Remove input clutch assembly (Fig. 42).

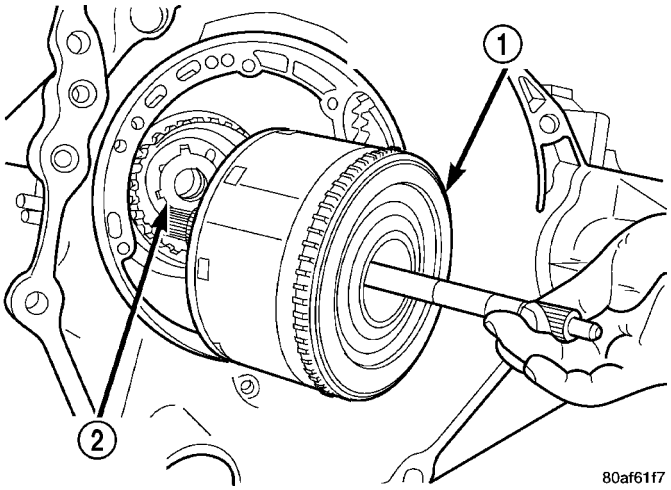

Fig. 42 Remove Input Clutch Assembly

1 - INPUT CLUTCH ASSEMBLY
2 - #4 THRUST WASHER

41TE AUTOMATIC TRANSAXLE (Continued)

(23) Remove #4 thrust plate (Fig. 43).

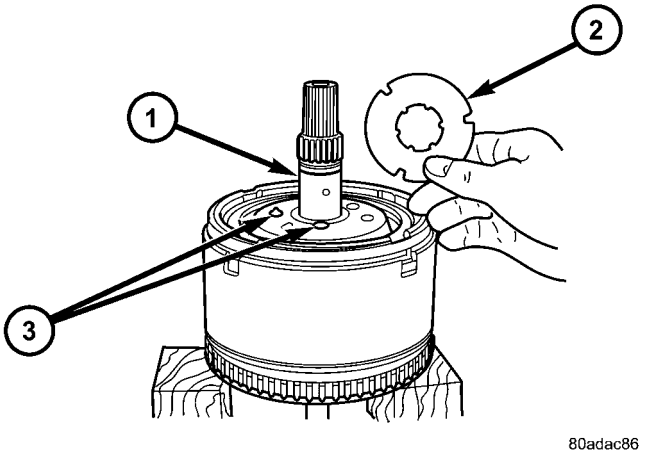

Fig. 43 No. 4 Thrust Plate

1 - OVERDRIVE SHAFT ASSEMBLY
2 - #4 THRUST PLATE (SELECT)
3 - 3 DABS OF PETROLATUM FOR RETENTION

(24) Remove front sun gear assembly and #4 thrust washer (Fig. 44).

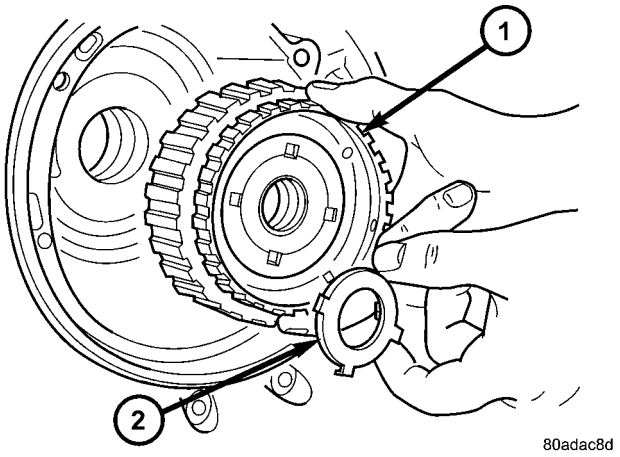

Fig. 44 Remove Front Sun Gear Assembly

1 - FRONT SUN GEAR ASSEMBLY
2 - #4 THRUST WASHER (FOUR TABS)

(25) Remove front carrier/rear annulus assembly and #6 needle bearing (Fig. 45).

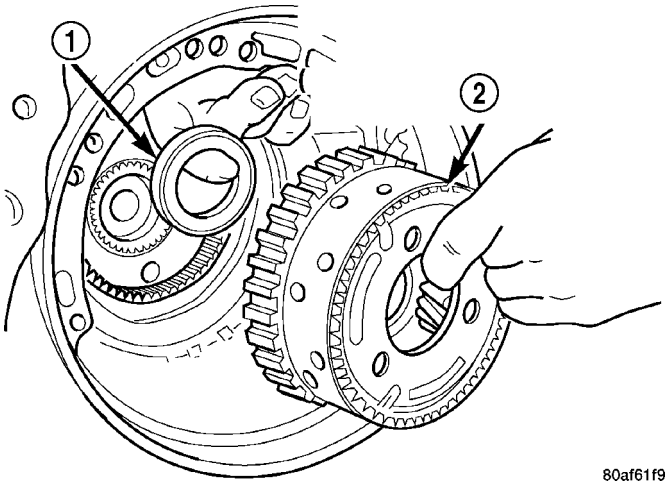

Fig. 45 Remove Front Carrier and Rear Annulus Assembly

1 - #6 NEEDLE BEARING
2 - FRONT CARRIER AND REAR ANNULUS ASSEMBLY (TWIST AND PULL OR PUSH TO REMOVE OR INSTALL).

(26) Remove rear sun gear and #7 needle bearing (Fig. 46).

NOTE: The number 7 needle bearing has three anti-reversal tabs and is common with the number five and number two position. The orientation should allow the bearing to seat flat against the rear sun gear (Fig. 47). A small amount of petrolatum can be used to hold the bearing to the rear sun gear.

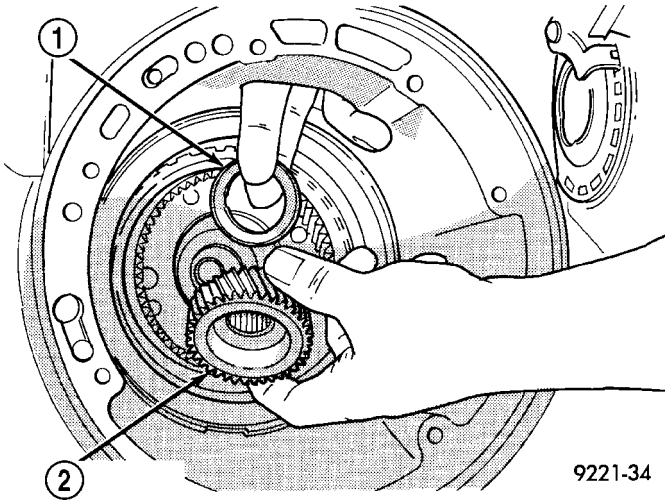

Fig. 46 Remove Rear Sun Gear

1 - #7 NEEDLE BEARING
2 - REAR SUN GEAR

41TE AUTOMATIC TRANSAXLE (Continued)

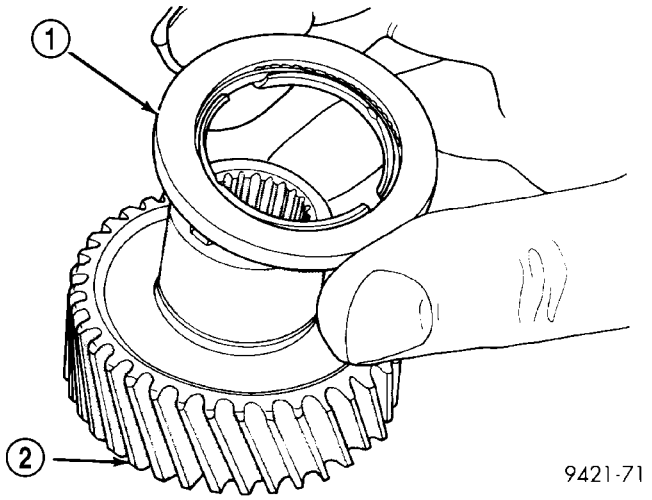

Fig. 47 Number 7 Bearing

1 - #7 NEEDLE BEARING
2 - REAR SUN GEAR

(27) Setup tool 5058 as shown in (Fig. 48). Compress 2/4 clutch return spring (just enough to remove snap ring) and remove snap ring.

NOTE: Verify that Tool 5058 is centered properly over the 2/4 clutch retainer before compressing. If necessary, fasten the 5058 bar to the bellhousing flange with any combination of locking pliers and bolts to center the tool properly.

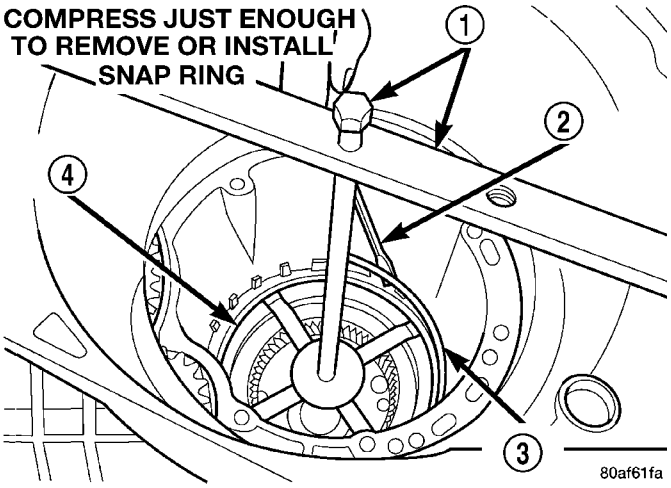

Fig. 48 Remove 2/4 Clutch Retainer Snap Ring

1 - TOOL 5058
2 - SCREWDRIVER
3 - SNAP RING
4 - 2/4 CLUTCH RETAINER

(28) Remove 2/4 clutch retainer (Fig. 49).

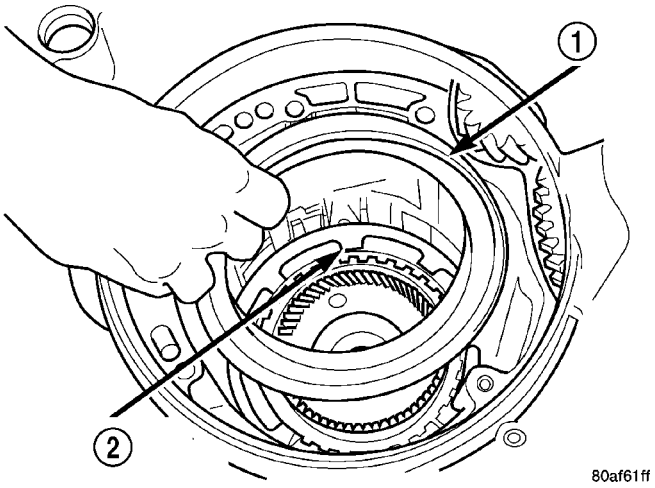

Fig. 49 2/4 Clutch Retainer

1 - 2/4 CLUTCH RETAINER
2 - 2/4 CLUTCH RETURN SPRING

(29) Remove 2/4 clutch return spring (Fig. 50).

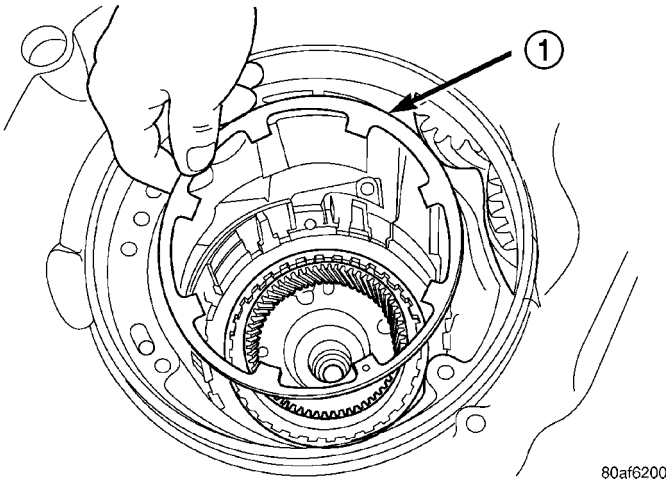

Fig. 50 Remove 2/4 Clutch Return Spring

1 - 2/4 CLUTCH RETURN SPRING

41TE AUTOMATIC TRANSAXLE (Continued)

(30) Remove 2/4 clutch pack (Fig. 51). **Tag 2/4 clutch pack for reassembly identification.**

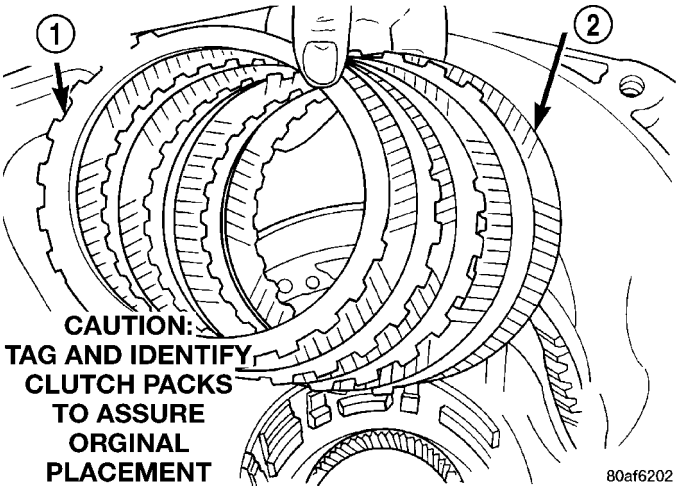

Fig. 51 Remove 2/4 Clutch Pack

1 - CLUTCH PLATE (4)
2 - CLUTCH DISC (4)

(31) Remove tapered snap ring (Fig. 52).

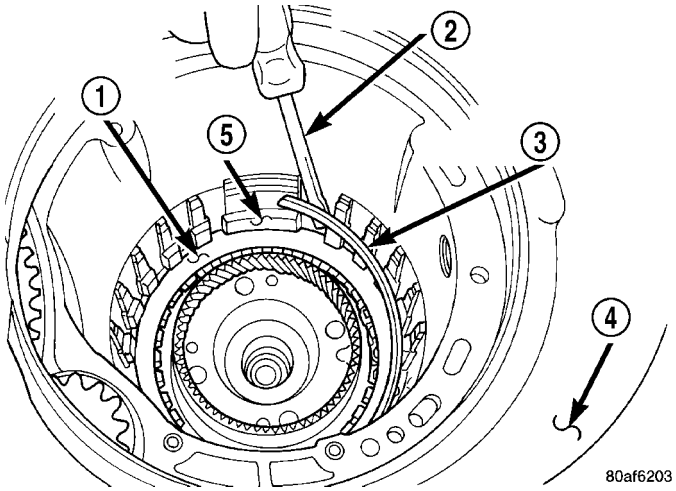

Fig. 52 Remove Tapered Snap Ring

1 - LOW/REVERSE CLUTCH REACTION PLATE
2 - SCREWDRIVER
3 - LOW/REVERSE TAPERED SNAP RING (TAPERED SIDE UP)
4 - OIL PAN FACE
5 - LONG TAB

(32) Remove low/reverse reaction plate (Fig. 53).

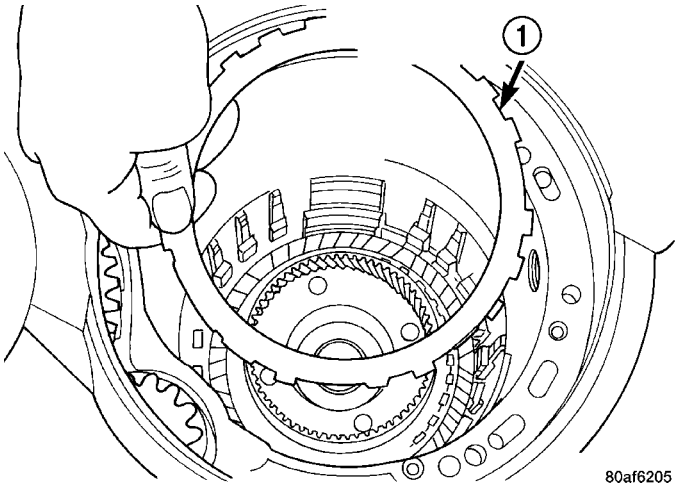

Fig. 53 Remove Low/Reverse Reaction Plate

1 - LOW/REVERSE REACTION PLATE (FLAT SIDE UP)

(33) Remove one low/reverse clutch disc (Fig. 54).

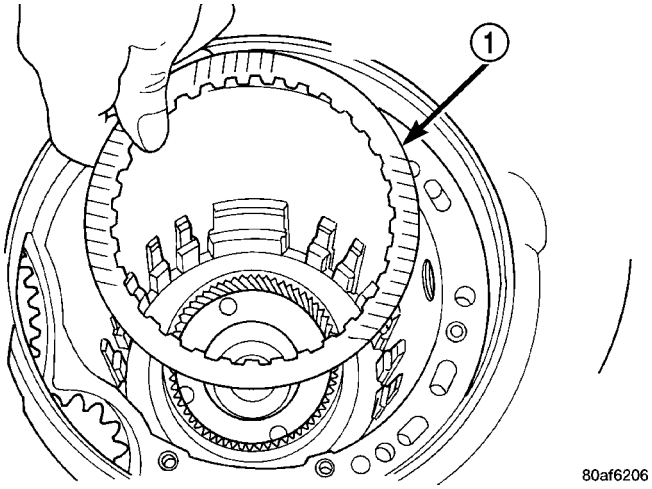

Fig. 54 Remove One Disc

1 - ONE DISC FROM LOW/REVERSE CLUTCH

41TE AUTOMATIC TRANSAXLE (Continued)

(34) Remove low/reverse reaction plate snap ring (Fig. 55).

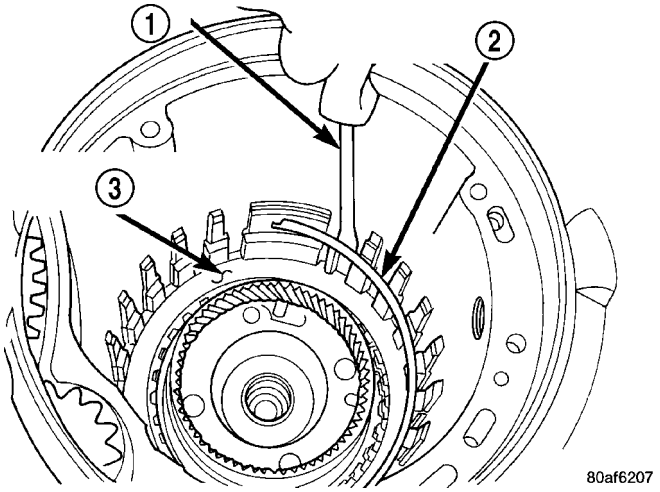

Fig. 55 Remove Low/Reverse Reaction Plate Snap Ring

1 - SCREWDRIVER
2 - LOW/REVERSE REACTION PLATE FLAT SNAP RING
3 - DO NOT SCRATCH CLUTCH PLATE

(35) Remove low/reverse clutch pack (Fig. 56).

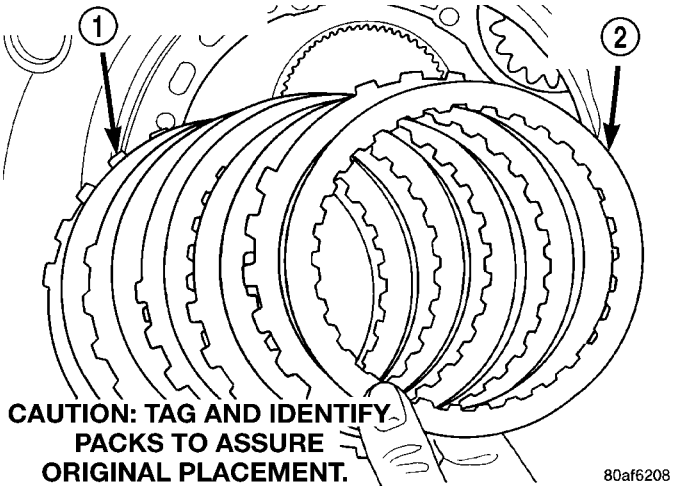

Fig. 56 Remove Low/Reverse Clutch Pack

1 - CLUTCH PLATES (5)
2 - CLUTCH DISCS (5)

(36) Remove transfer gear cover-to-case bolts (Fig. 57).

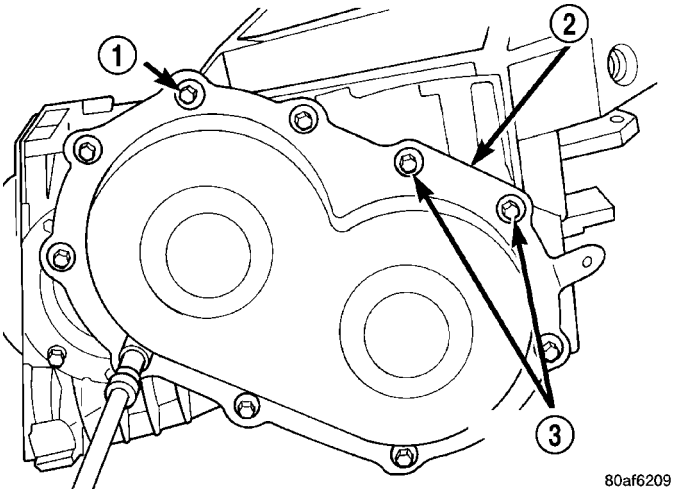

Fig. 57 Remove Rear Cover Bolts

1 - REAR COVER BOLTS
2 - REAR COVER
3 - USE SEALANT ON BOLTS

(37) Remove transfer gear cover (Fig. 58).

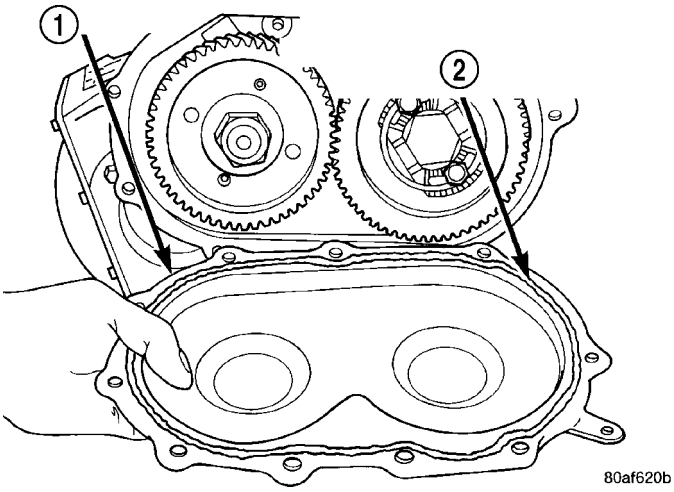

Fig. 58 Remove Rear Cover

1 - REAR COVER
2 - 1/8 INCH BEAD OF MOPAR® ATF RTV (MS-GF41) AS SHOWN

41TE AUTOMATIC TRANSAXLE (Continued)

(38) Using Tool 6259, remove transfer shaft gear-to-shaft nut and coned washer (Fig. 59) (Fig. 60).

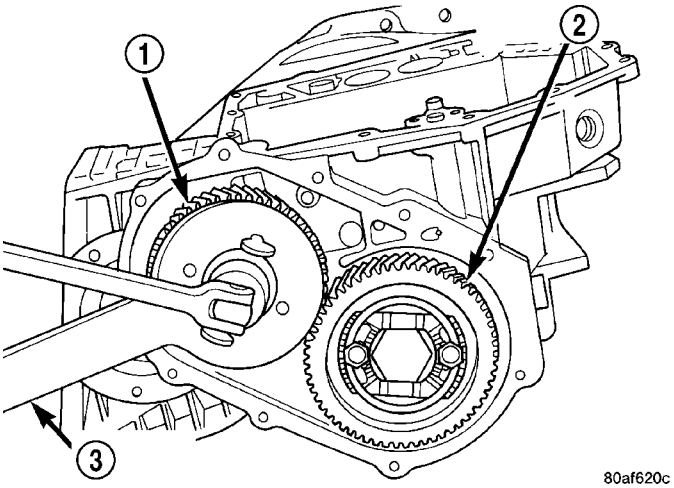

Fig. 59 Remove Transfer Shaft Gear Nut

1 - TRANSFER SHAFT GEAR
2 - OUTPUT GEAR
3 - SPECIAL TOOL 6259

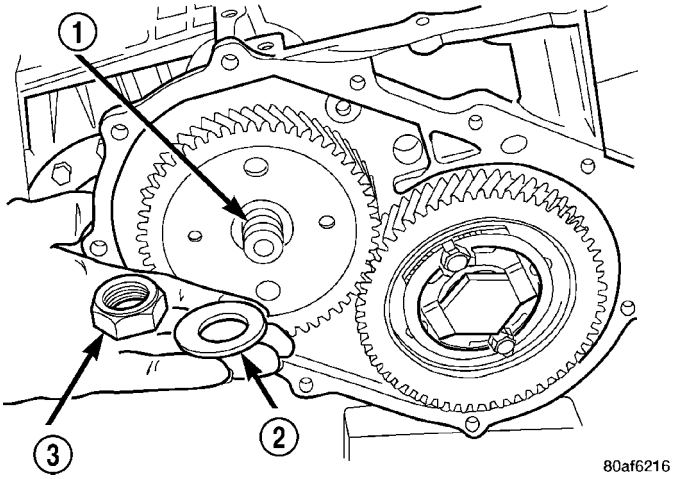

Fig. 60 Transfer Shaft Gear Nut and Coned Washer

1 - TRANSFER SHAFT
2 - LOCK WASHER
3 - NUT

(39) Using tool L-4407A, remove transfer shaft gear (Fig. 61).

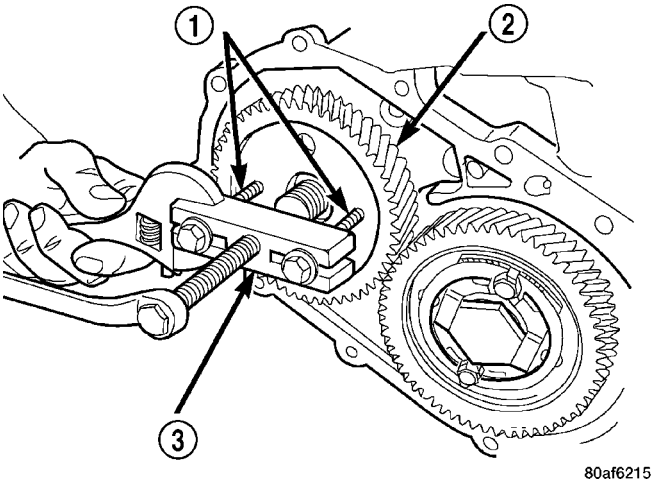

Fig. 61 Remove Transfer Shaft Gear

1 - SPECIAL TOOL L4407-6
2 - TRANSFER SHAFT GEAR
3 - SPECIAL TOOL L4407A

(40) Remove transfer gear shim (select) (Fig. 62).

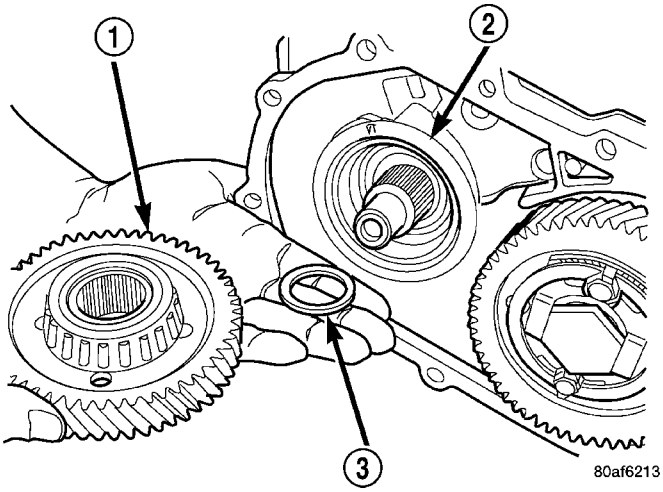

Fig. 62 Remove Transfer Shaft Gear and (Select) Shim

1 - TRANSFER SHAFT GEAR
2 - BEARING CUP RETAINER
3 - SHIM (SELECT)

41TE AUTOMATIC TRANSAXLE (Continued)

(41) Remove bearing cup retainer (Fig. 63).

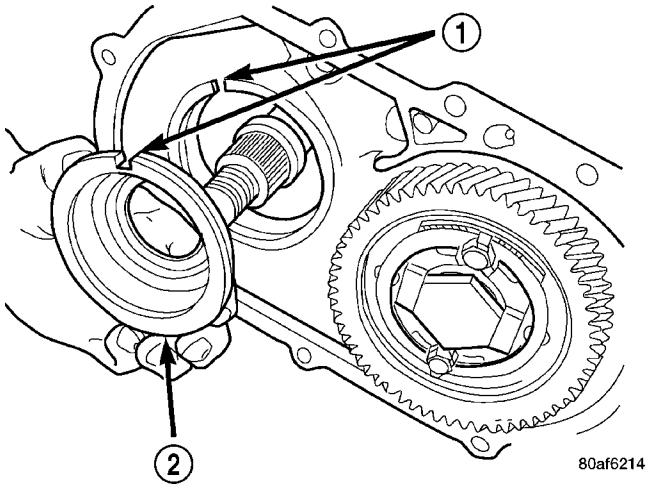

Fig. 63 Remove Bearing Cup Retainer

1 - ALIGN INDEXING TAB TO SLOT
2 - BEARING CUP RETAINER

(42) Remove transfer gear bearing cone using setup shown in (Fig. 64).

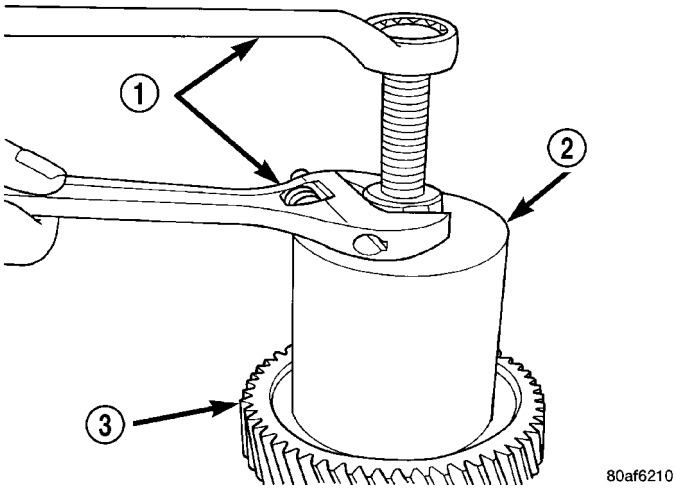

Fig. 64 Remove Transfer Gear Bearing Cone

1 - WRENCHES
2 - TOOL 5048 WITH JAWS TOOL 5048–4 AND BUTTON TOOL L-4539–2
3 - TRANSFER SHAFT GEAR

(43) Remove transfer shaft bearing cup from retainer using Tool 6062 (Fig. 65).

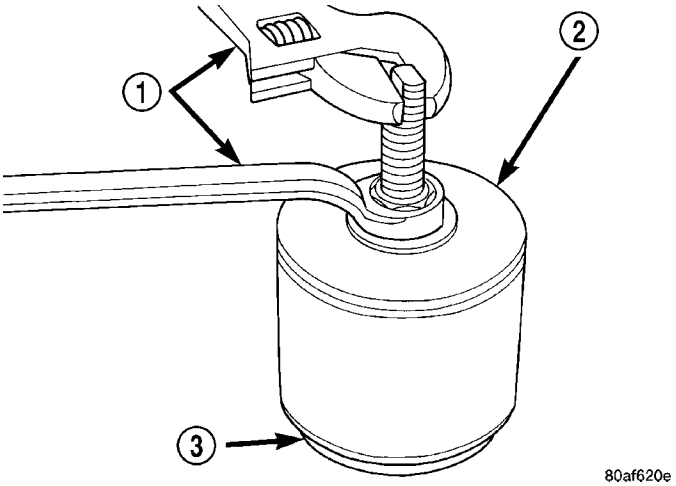

Fig. 65 Remove Transfer Shaft Bearing Cup

1 - WRENCHES
2 - TOOL 6062
3 - TRANSFER SHAFT BEARING CUP RETAINER

(44) Using Tool 6051, remove transfer shaft bearing snap ring (Fig. 66).

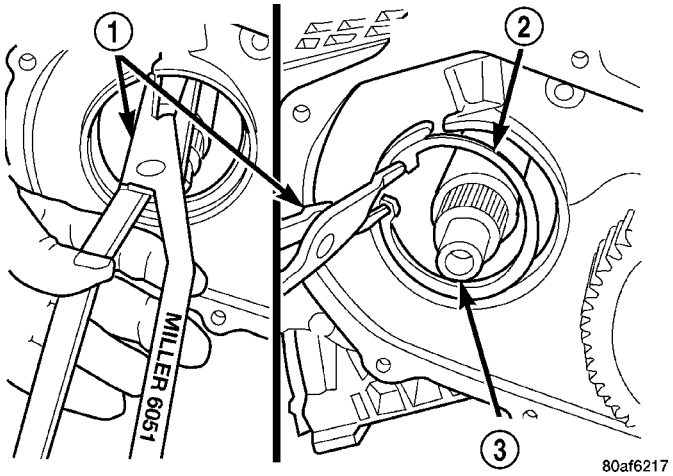

Fig. 66 Remove Transfer Shaft Bearing Snap Ring

1 - SNAP RING PLIERS TOOL 6051
2 - TRANSFER SHAFT BEARING SNAP RING
3 - TRANSFER SHAFT

41TE AUTOMATIC TRANSAXLE (Continued)

(45) Using tool 5049A, remove transfer shaft from transaxle (Fig. 67).

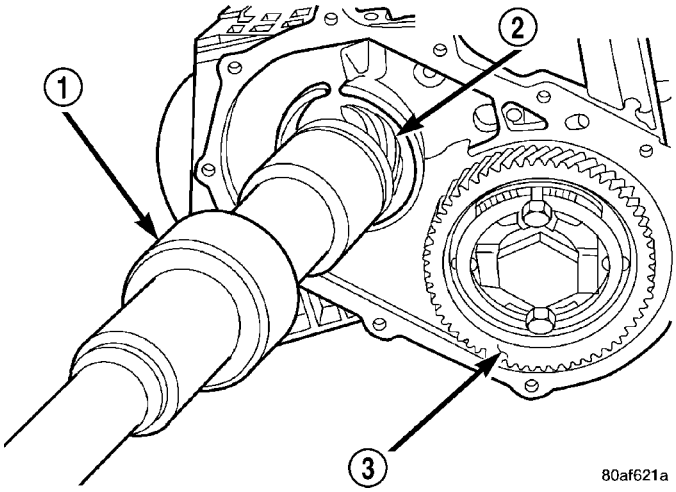

Fig. 67 Remove Transfer Shaft

1 - SPECIAL TOOL 5049–A
2 - TRANSFER SHAFT
3 - OUTPUT GEAR

(46) Slip bearing cup retainer and oil baffle off of shaft (Fig. 68).

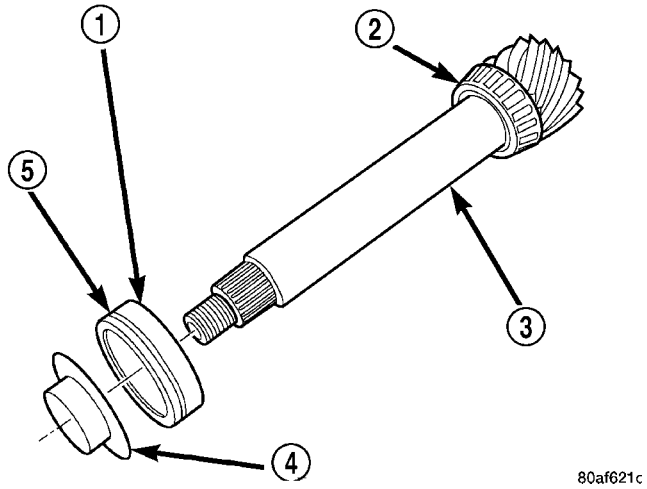

Fig. 68 Bearing Cup Removed

1 - BEARING CUP
2 - BEARING CONE
3 - TRANSFER SHAFT
4 - OIL BAFFLE
5 - O-RING

(47) Using tool P-334, press transfer shaft bearing cone off of shaft (Fig. 69).

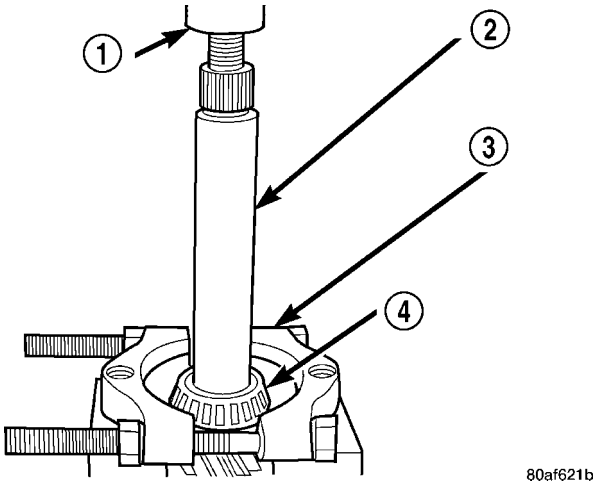

Fig. 69 Remove Transfer Shaft Bearing Cone

1 - ARBOR PRESS RAM
2 - TRANSFER SHAFT
3 - TOOL P-334
4 - BEARING CONE

(48) Bend output gear retaining strap ears flat to allow bolt removal.

(49) Remove output shaft stirrup strap bolts (Fig. 70).

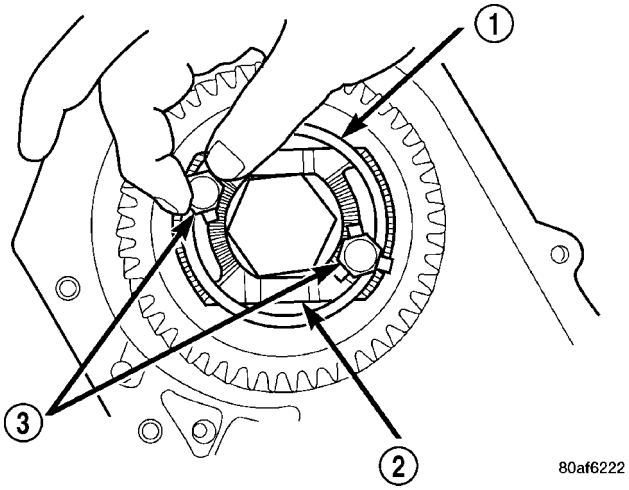

Fig. 70 Remove Strap Bolts

1 - RETAINING STRAP
2 - STIRRUP
3 - RETAINING STRAP BOLTS

41TE AUTOMATIC TRANSAXLE (Continued)

(50) Remove stirrup and strap (Fig. 71).

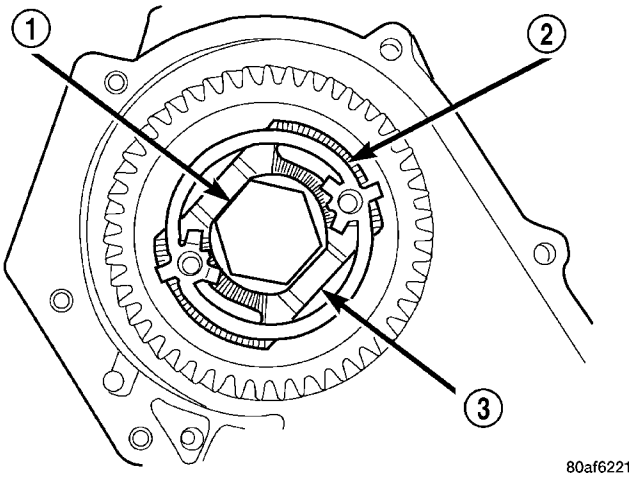

Fig. 71 Remove Stirrup Strap

1 - OUTPUT GEARBOLT
2 - RETAINING STRAP
3 - STIRRUP

(51) Using Tool 6259 (Fig. 72), remove output shaft gear-to-shaft bolt and washer (Fig. 73).

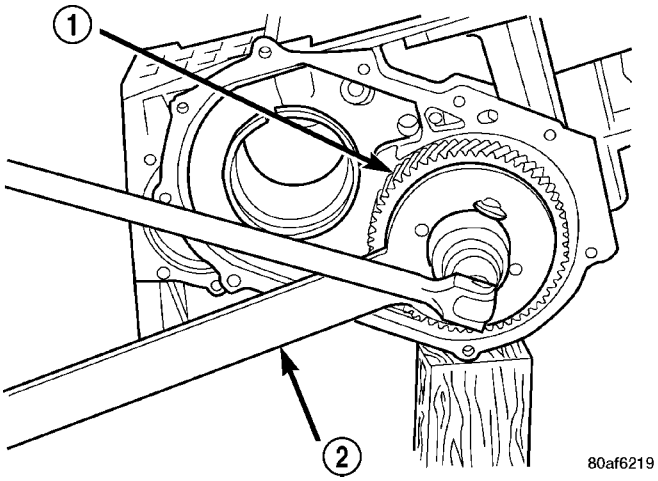

Fig. 72 Remove Output Gear Bolt

1 - OUTPUT GEAR
2 - TOOL 6259

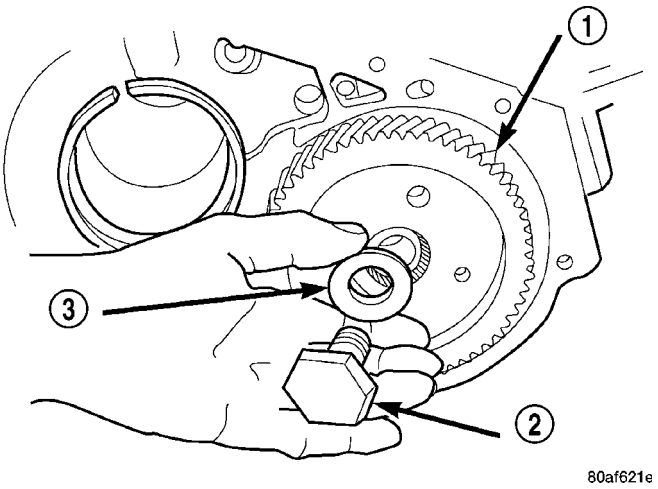

Fig. 73 Output Gear Bolt and Washer

1 - OUTPUT GEAR
2 - BOLT
3 - CONED LOCK WASHER

(52) Using Tool L4407A, and button 6055, remove output gear from shaft (Fig. 74).

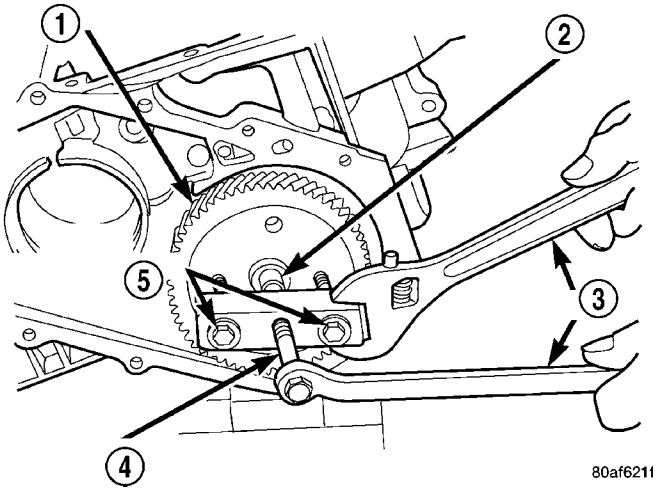

Fig. 74 Remove Output Gear

1 - OUTPUT GEAR
2 - BUTTON TOOL 6055
3 - WRENCHES
4 - TOOL L4407A
5 - BOLTS TOOL L4407–6

41TE AUTOMATIC TRANSAXLE (Continued)

(53) Remove output gear bearing shim (select) (Fig. 75).

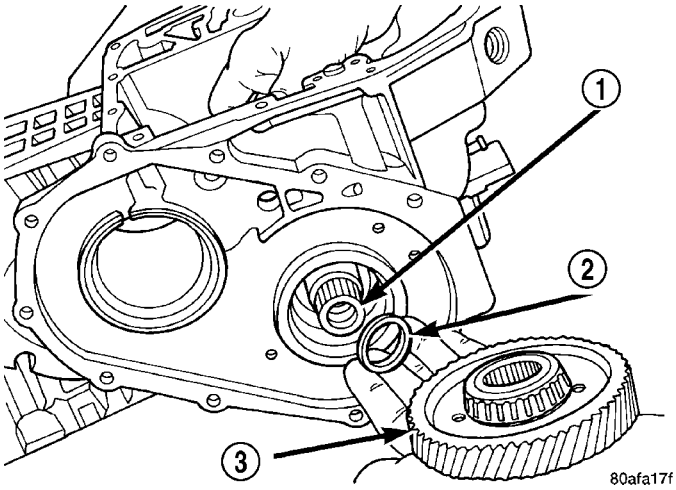

Fig. 75 Output Gear and (Select) Shim

1 - REAR CARRIER ASSEMBLY
2 - SHIM (SELECT)
3 - OUTPUT GEAR

(54) Using setup as shown in (Fig. 76), remove output gear bearing cone.

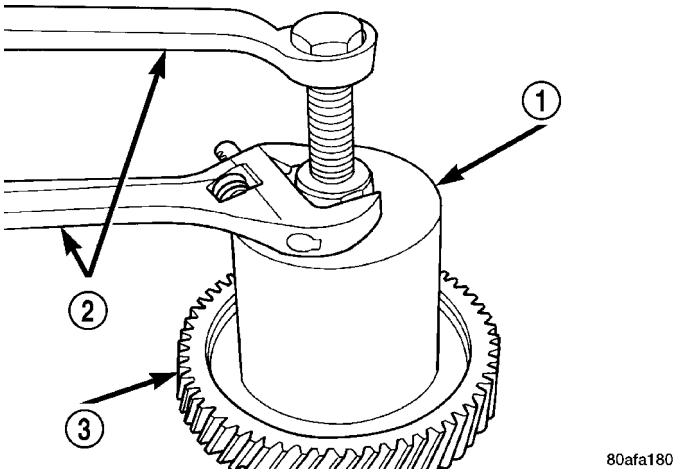

Fig. 76 Remove Bearing Cone

1 - TOOL 5048 WITH JAWS 5048–5 AND BUTTON L-4539–2
2 - WRENCHES
3 - OUTPUT GEAR

(55) Remove rear carrier assembly from transaxle (Fig. 77).

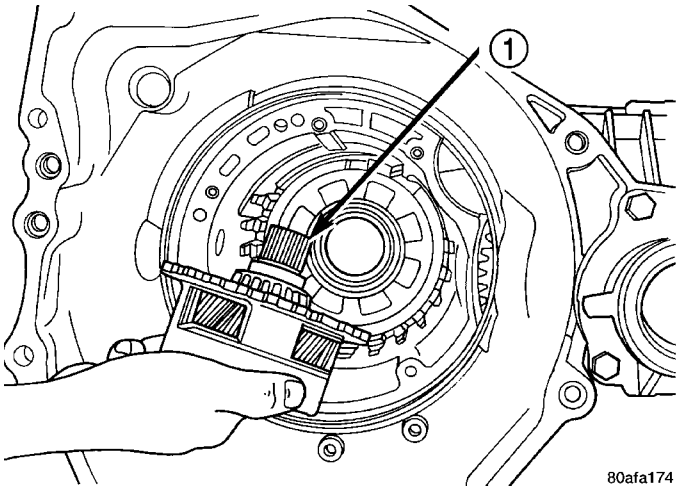

Fig. 77 Remove Rear Carrier Assembly

1 - REAR CARRIER ASSEMBLY

(56) Remove rear carrier assembly bearing cone using setup shown in (Fig. 78).

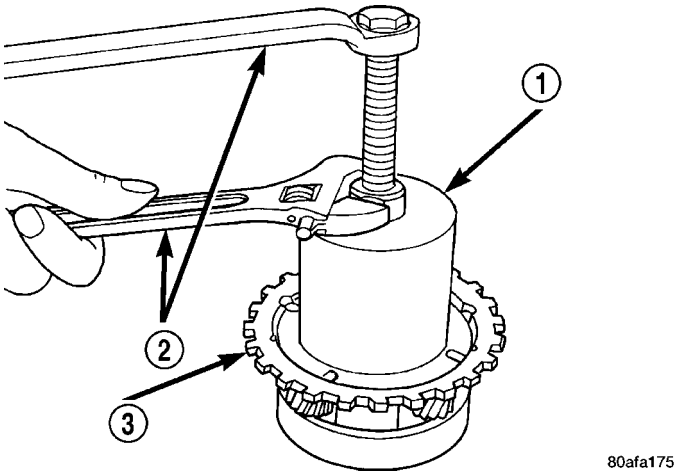

Fig. 78 Remove Rear Carrier Bearing Cone

1 - TOOL 5048 WITH JAWS 5048–3 AND BUTTON 6055
2 - WRENCHES
3 - REAR CARRIER ASSEMBLY

41TE AUTOMATIC TRANSAXLE (Continued)

(57) Install low/reverse spring compressor tool as shown in (Fig. 79) (Fig. 80).

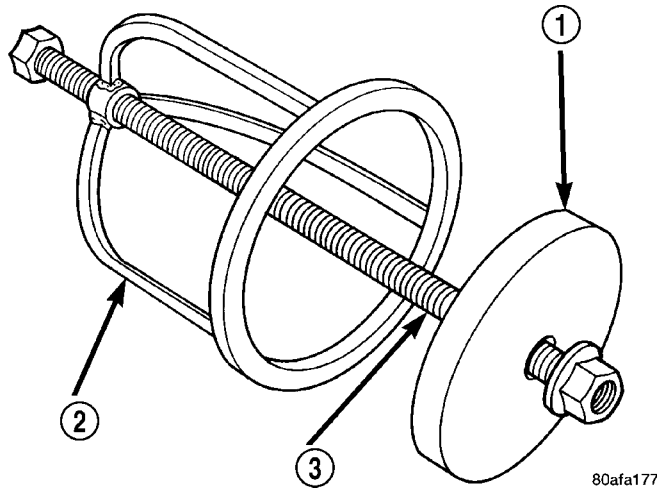

Fig. 79 Low/Reverse Spring Compressor Tool

1 - TOOL 6057
2 - TOOL 5059
3 - TOOL 5058–3

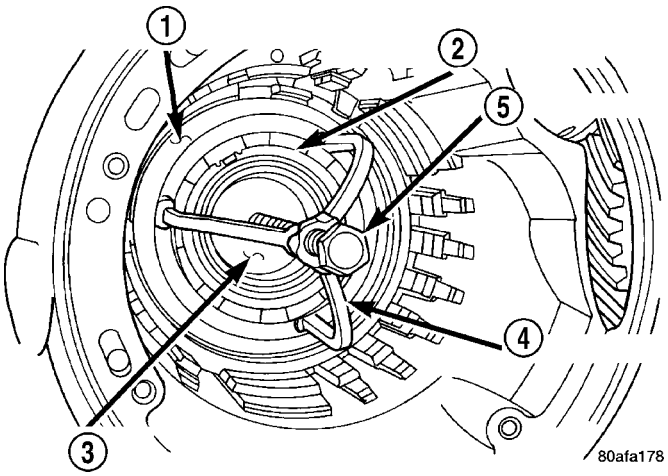

Fig. 80 Compressor Tool in Use

1 - LOW/REVERSE CLUTCH RETURN SPRING
2 - SNAP RING (INSTALL AS SHOWN)
3 - TOOL 6057
4 - TOOL 5059
5 - TOOL 5058–3

(58) Compress low/reverse piston return spring and remove snap ring (Fig. 81).

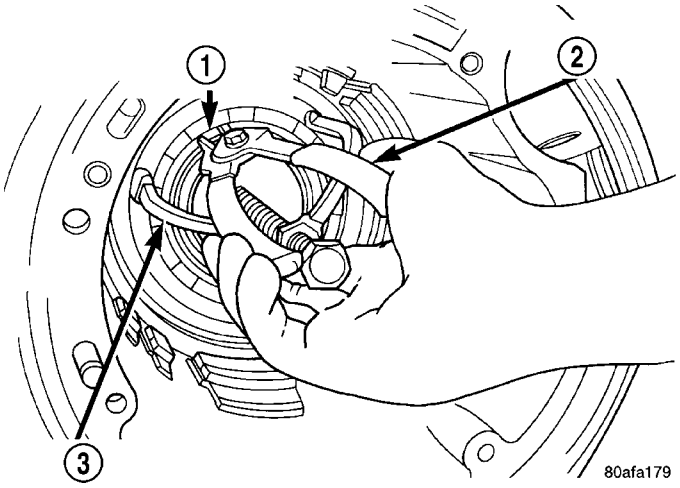

Fig. 81 Remove Snap Ring

1 - SNAP RING OPENING MUST BE BETWEEN SPRING LEVERS (AS SHOWN)
2 - SNAP RING PLIERS
3 - TOOL 6057

(59) Remove low/reverse spring compressor tool and low reverse piston return spring (Fig. 82).

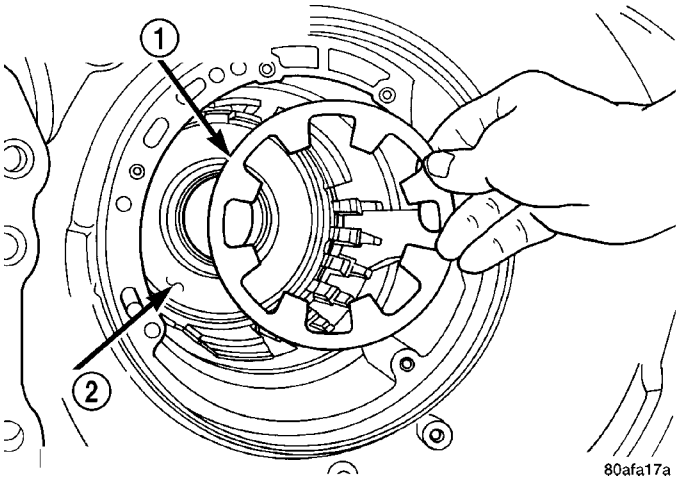

Fig. 82 Low/Reverse Piston Return Spring

1 - LOW/REVERSE PISTON RETURN SPRING
2 - PISTON

41TE AUTOMATIC TRANSAXLE (Continued)

(60) Using a suitable punch , drive out park guide bracket pivot shaft plug (Fig. 83).

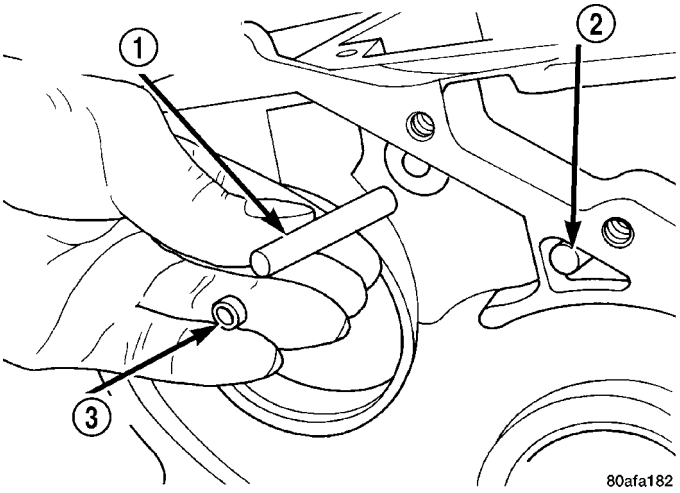

Fig. 83 Remove Anchor Shaft and Plug

1 - GUIDE BRACKET ANCHOR SHAFT
2 - PIVOT SHAFT
3 - ANCHOR SHAFT PLUG

(61) Using ordinary pliers, remove pivot shaft and guide bracket assembly (Fig. 84).

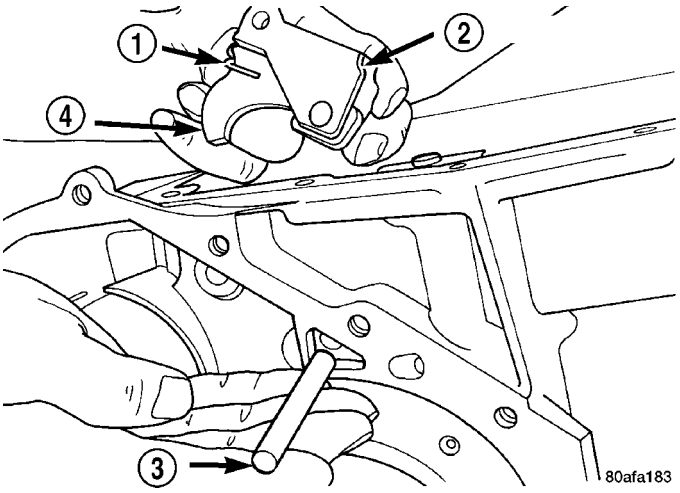

Fig. 84 Pivot Shaft and Guide Bracket

1 - ANTIRACHET SPRING
2 - GUIDE BRACKET
3 - PIVOT SHAFT
4 - PAWL

(62) Inspect guide bracket components for excessive wear and replace if necessary (Fig. 85).

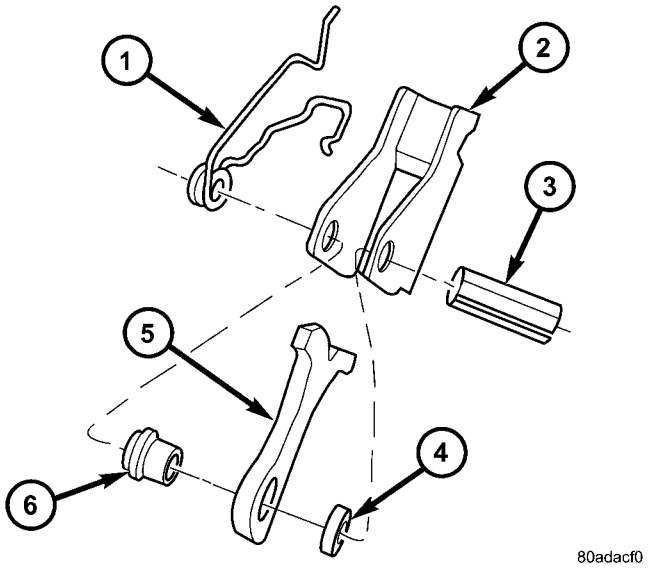

Fig. 85 Guide Bracket Disassembled

1 - ANTIRATCHET SPRING
2 - GUIDE BRACKET
3 - SPLIT SLEEVE
4 - SPACER
5 - PAWL
6 - STEPPED SPACER

(63) Remove low/reverse clutch piston (Fig. 86).

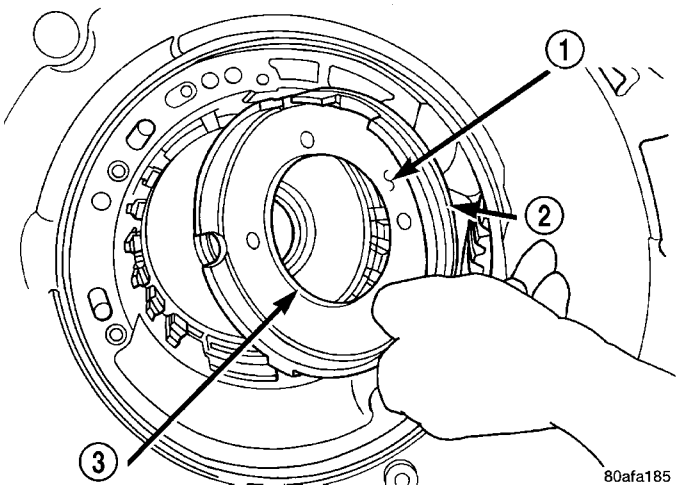

Fig. 86 Remove Low/Reverse Clutch Piston

1 - LOW/REVERSE CLUTCH PISTON
2 - D-RING SEAL
3 - D-RING SEAL

41TE AUTOMATIC TRANSAXLE (Continued)

(64) Remove low/reverse piston retainer-to-case screws (Fig. 87).

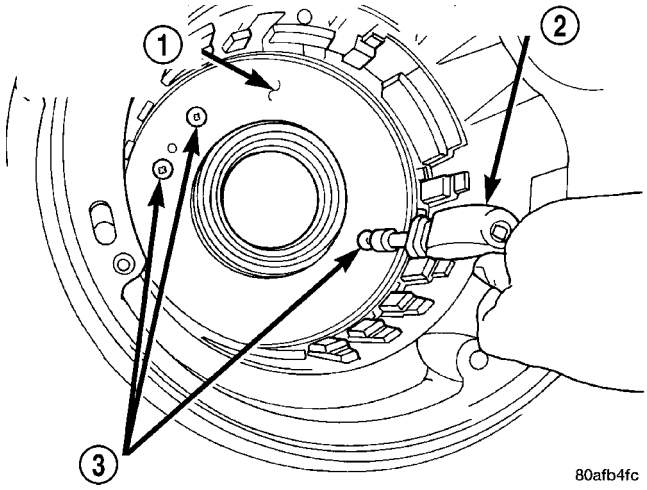

Fig. 87 Remove Piston Retainer Attaching Screws

1 - LOW/REVERSE CLUTCH PISTON RETAINER
2 - SCREWDRIVER
3 - TORX-LOC SCREWS

(65) Remove low/reverse piston retainer (Fig. 88).

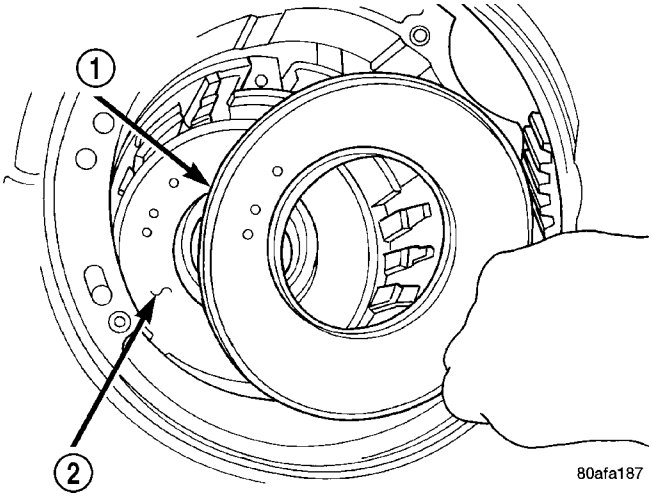

Fig. 88 Remove Piston Retainer

1 - LOW/REVERSE CLUTCH PISTON RETAINER
2 - GASKET

(66) Remove low/reverse piston retainer-to-case gasket (Fig. 89).

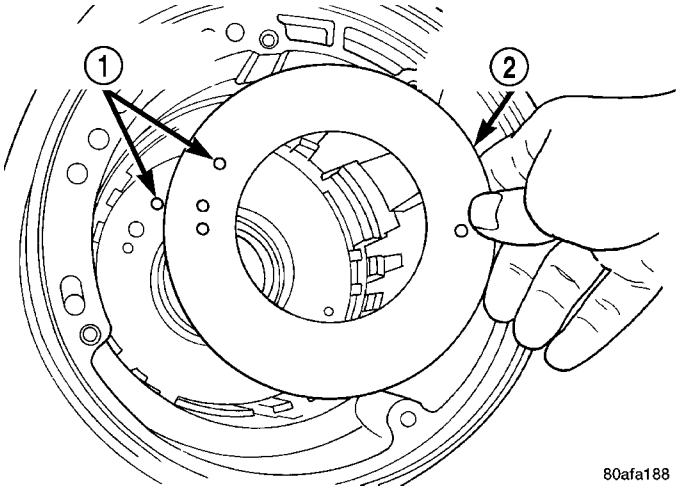

Fig. 89 Remove Piston Retainer Gasket

1 - GASKET HOLES MUST LINE UP
2 - LOW/REVERSE CLUTCH PISTON RETAINER GASKET

(67) Using a hammer and suitable drift, drive out inner output bearing cup (Fig. 90).

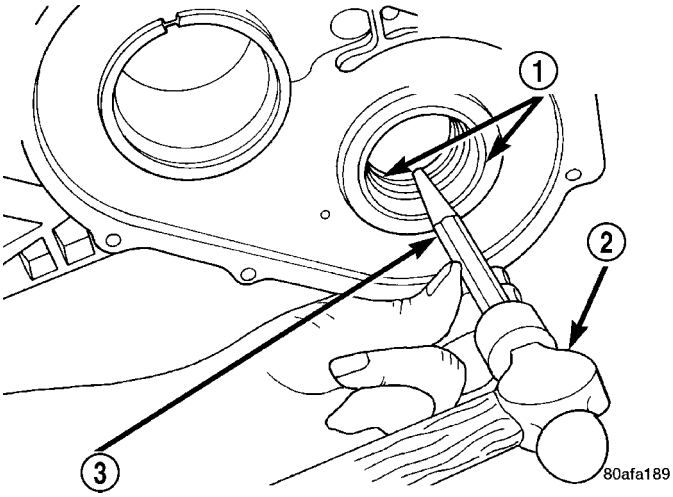

Fig. 90 Remove Output Bearing Inner Cup

1 - OUTPUT BEARING CUPS (REPLACE IN PAIRS)
2 - HAMMER
3 - BRASS DRIFT

41TE AUTOMATIC TRANSAXLE (Continued)

(68) Using tool 6062, remove outer output bearing cup (Fig. 91).

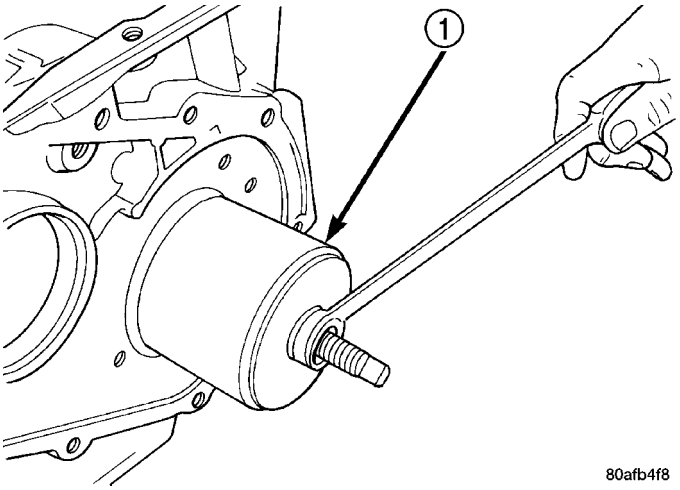

Fig. 91 Remove Output Bearing Outer Cup

1 - TOOL 6062

ASSEMBLY

CAUTION: The cooler bypass valve must be replaced if transaxle failure has occurred. Do not attempt to reuse or clean old valve.

NOTE: If transaxle is being overhauled (clutch and/or seal replacement), the TCM/PCM Quick Learn procedure must be performed. (Refer to 8 - ELECTRICAL/ ELECTRONIC CONTROL MODULES/TRANSMISSION CONTROL MODULE - STANDARD PROCEDURE)

(1) Install both output bearing cups using Tool 5050 (Fig. 92).

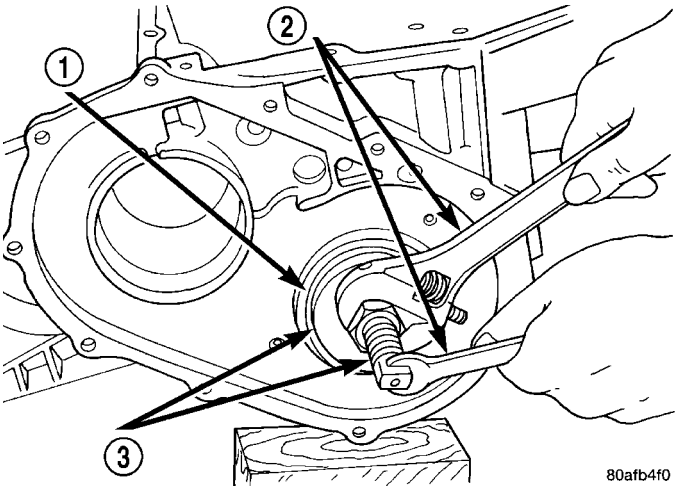

Fig. 92 Install Both Output Bearing Cups

1 - OUTPUT BEARING CUPS
2 - WRENCHES
3 - TOOL 5050

(2) Install low/reverse piston retainer gasket (Fig. 93). Make sure gasket holes line up with case.

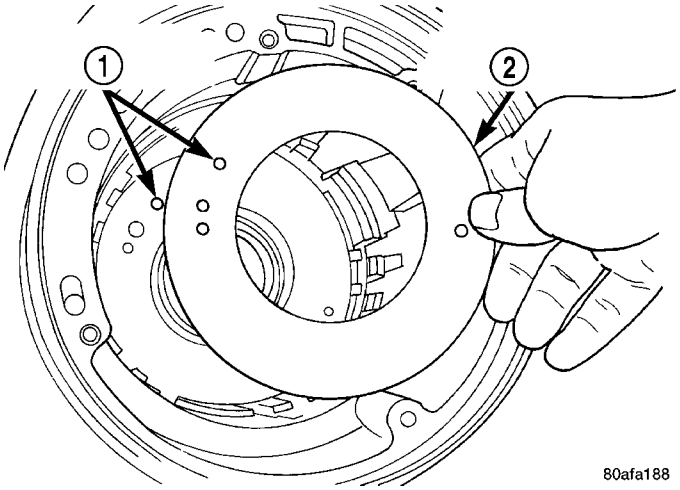

Fig. 93 Install Piston Retainer Gasket

1 - GASKET HOLES MUST LINE UP
2 - LOW/REVERSE CLUTCH PISTON RETAINER GASKET

(3) Install low/reverse piston retainer (Fig. 94).

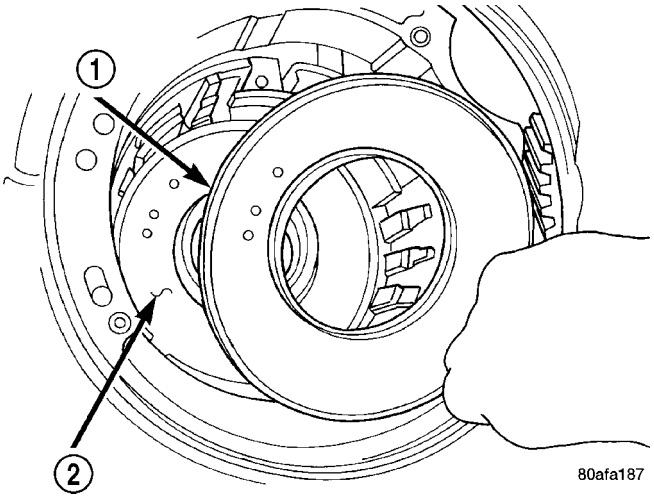

Fig. 94 Install Piston Retainer

1 - LOW/REVERSE CLUTCH PISTON RETAINER
2 - GASKET

41TE AUTOMATIC TRANSAXLE (Continued)

(4) Install low/reverse piston retainer-to-case bolts (Fig. 95) and torque to 5 N·m (45 in. lbs.).

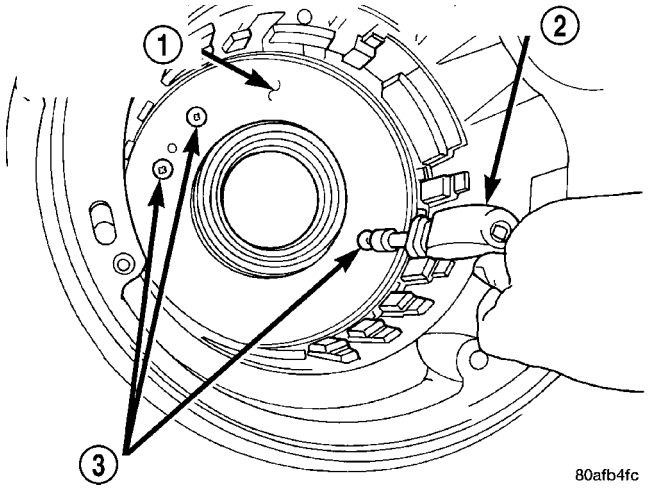

Fig. 95 Install Piston Retainer Attaching Screws

1 - LOW/REVERSE CLUTCH PISTON RETAINER
2 - SCREWDRIVER
3 - TORX-LOC SCREWS

(5) Install low/reverse clutch piston (Fig. 96).

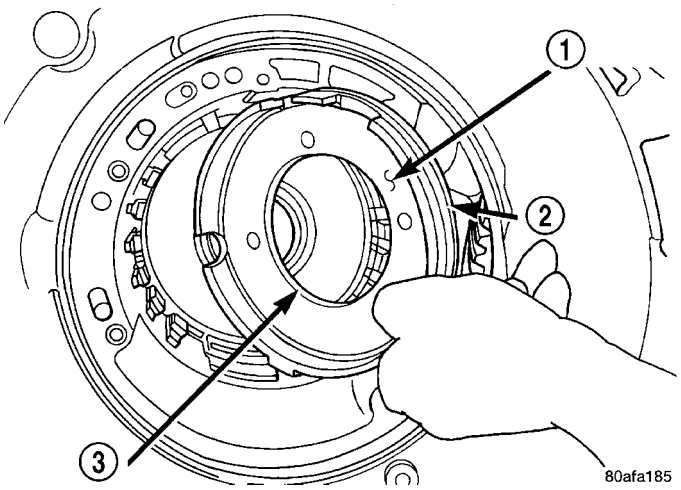

Fig. 96 Install Low/Reverse Clutch Piston

1 - LOW/REVERSE CLUTCH PISTON
2 - D-RING SEAL
3 - D-RING SEAL

(6) Assemble park guide bracket assembly (Fig. 98) (Fig. 97).

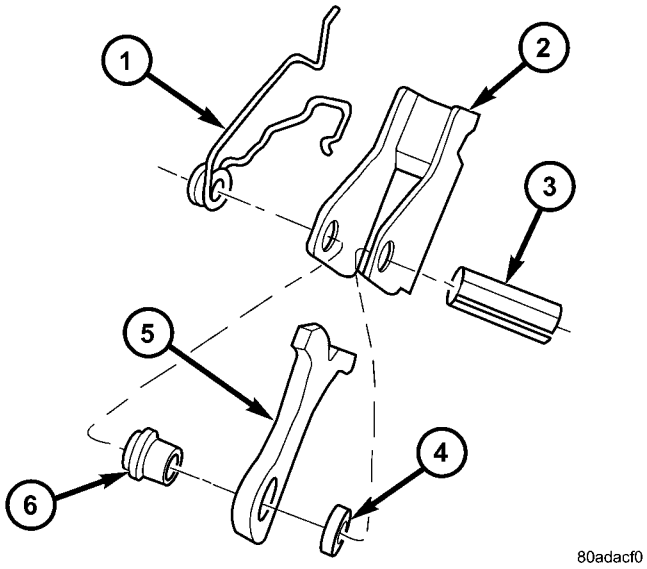

Fig. 97 Guide Bracket Disassembled

1 - ANTIRATCHET SPRING
2 - GUIDE BRACKET
3 - SPLIT SLEEVE
4 - SPACER
5 - PAWL
6 - STEPPED SPACER

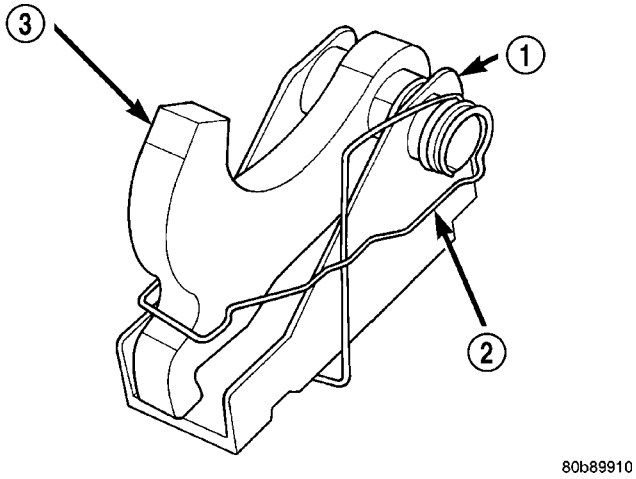

Fig. 98 Guide Bracket

1 - GUIDE BRACKET
2 - ANTIRATCHET SPRING (MUST BE ASSEMBLED AS SHOWN)
3 - PAWL

41TE AUTOMATIC TRANSAXLE (Continued)

(7) Install guide bracket into position and insert pivot shaft (Fig. 99).

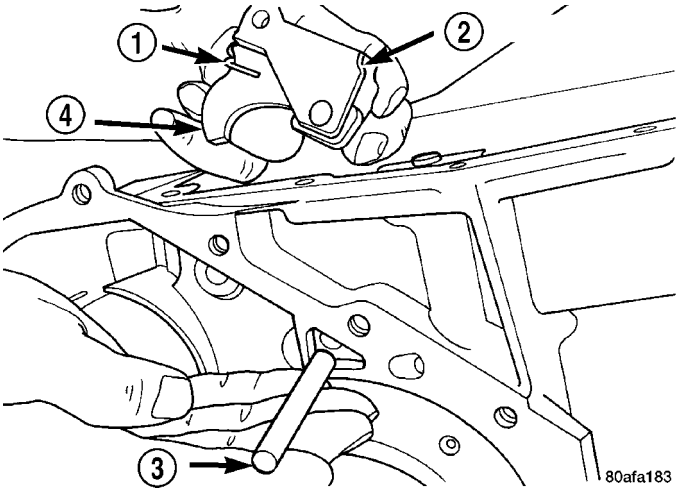

Fig. 99 Pivot Shaft and Guide Bracket

1 - ANTIRACHET SPRING
2 - GUIDE BRACKET
3 - PIVOT SHAFT
4 - PAWL

(8) Install anchor shaft and plug (Fig. 100). Make sure guide bracket and split sleeve are in contact with the rear of the transaxle case.

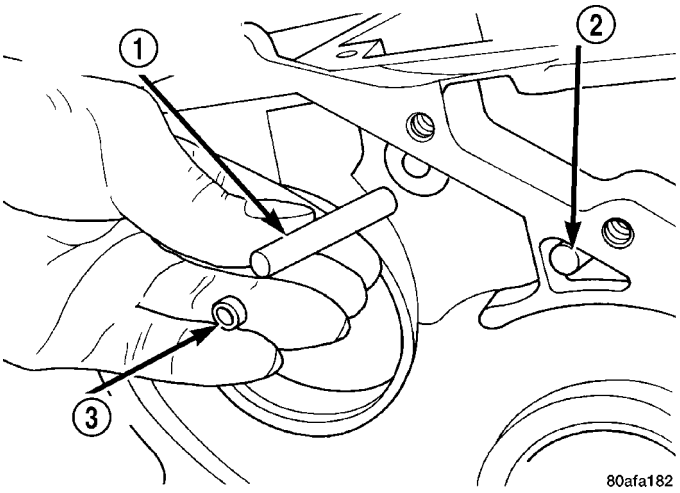

Fig. 100 Install Anchor Shaft and Plug

1 - GUIDE BRACKET ANCHOR SHAFT
2 - PIVOT SHAFT
3 - ANCHOR SHAFT PLUG

(9) Install low/reverse piston return spring (Fig. 101).

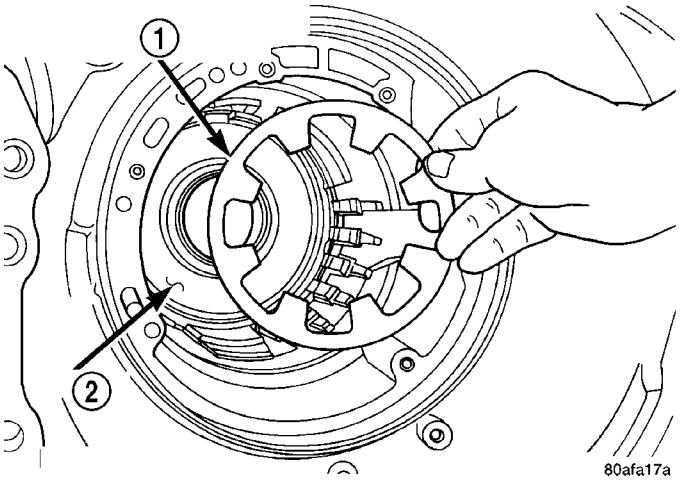

Fig. 101 Low/Reverse Piston Return Spring

1 - LOW/REVERSE PISTON RETURN SPRING
2 - PISTON

(10) Install low/reverse spring compressor into position (Fig. 102). Compress low/reverse piston and install snap ring as shown in (Fig. 103).

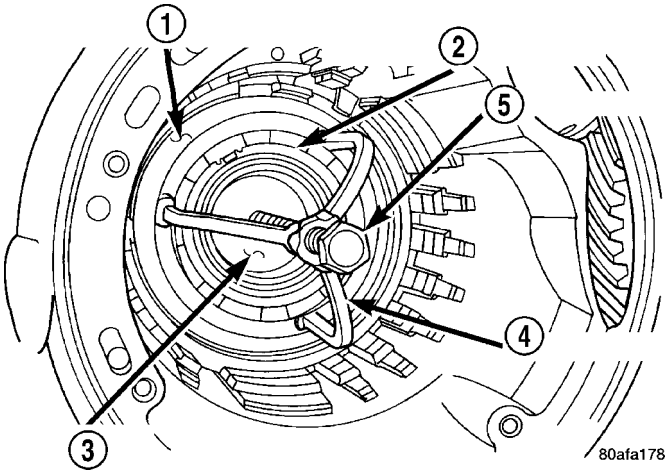

Fig. 102 Compressor Tool in Use

1 - LOW/REVERSE CLUTCH RETURN SPRING
2 - SNAP RING (INSTALL AS SHOWN)
3 - TOOL 6057
4 - TOOL 5059
5 - TOOL 5058–3

41TE AUTOMATIC TRANSAXLE (Continued)

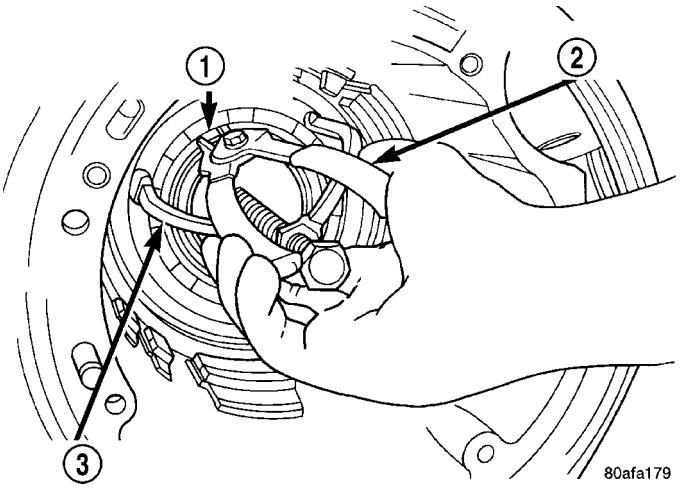

Fig. 103 Install Snap Ring

1 - SNAP RING OPENING MUST BE BETWEEN SPRING LEVERS (AS SHOWN)
2 - SNAP RING PLIERS
3 - TOOL 6057

(11) Install rear carrier bearing cone using Tool 6053 (Fig. 104).

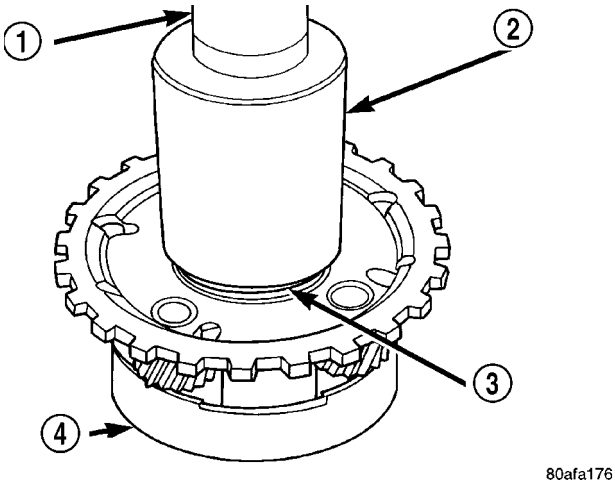

Fig. 104 Install Rear Carrier Bearing Cone

1 - ARBOR PRESS RAM
2 - TOOL 6053
3 - NEW BEARING CONE
4 - REAR CARRIER ASSEMBLY

(12) Install rear carrier assembly to transaxle case (Fig. 105).

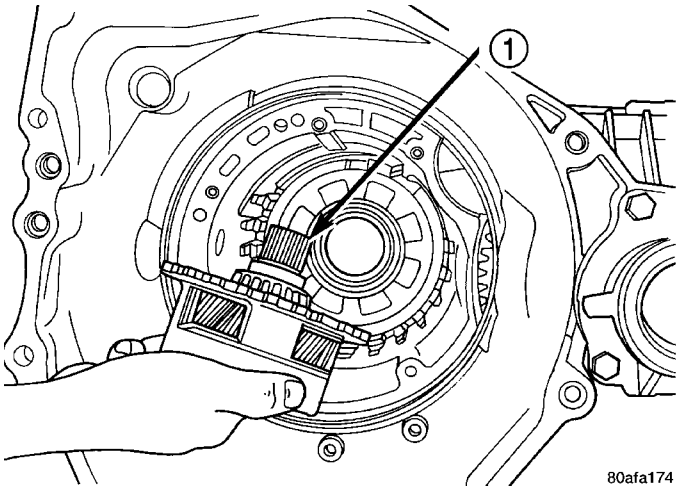

Fig. 105 Install Rear Carrier Assembly

1 - REAR CARRIER ASSEMBLY

(13) Install output gear bearing cone using Tool 5052 (Fig. 106).

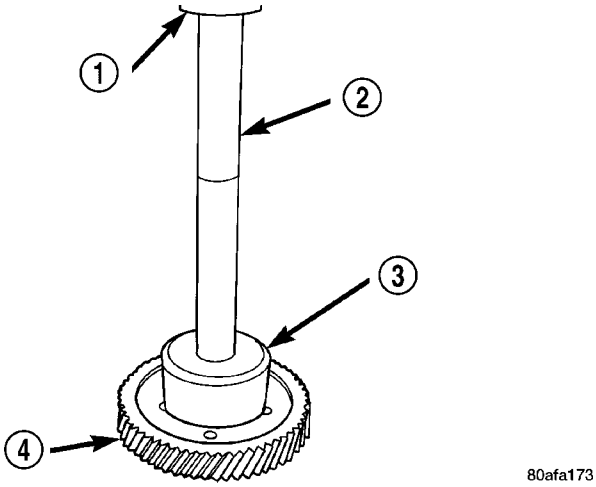

Fig. 106 Install Output Gear Bearing Cone

1 - ARBOR PRESS RAM
2 - HANDLE C-4171
3 - TOOL 5052
4 - OUTPUT GEAR

41TE AUTOMATIC TRANSAXLE (Continued)

(14) **OUTPUT GEAR BEARING ADJUSTMENT:**

(a) With output gear removed, install a 4.50 mm (0.177 in.) gauging shim (Fig. 108) on the rear carrier assembly hub, using grease to hold the shim in place.

(b) Using Tool 6259, install output gear and bearing assembly. Torque to 271 N·m (200 ft. lbs.).

(c) Measure bearing end play. Attach Tool L-4432 to the gear (Fig. 107).

(d) Push and pull the gear while rotating back and forth to ensure seating of bearing rollers.

(e) Using a dial indicator mounted to the transaxle case, measure output gear end play as shown in (Fig. 107).

(f) Refer to the output gear bearing shim chart for the required shim to obtain proper bearing setting.

(g) Use Tool 6259 to remove the output gear retaining bolt and washer. To remove the output gear, use Tool L4407A.

(h) Remove the gauging shim and install the proper shim determined by the chart. Use grease to hold the shim in place.

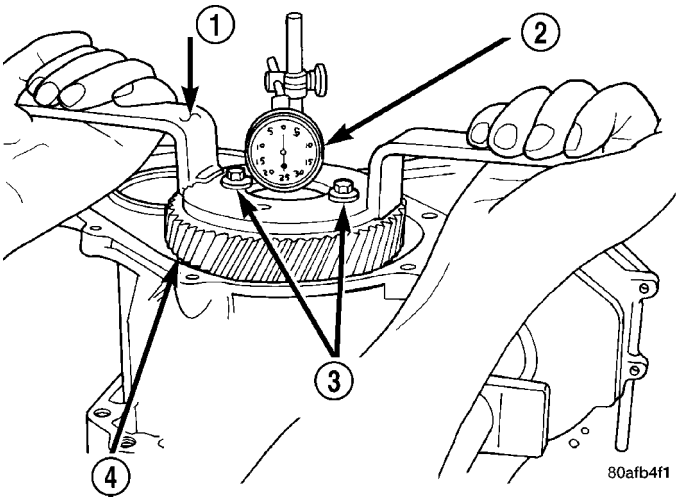

Fig. 107 Checking Output Gear Bearings End Play

1 - TOOL L-4432
2 - DIAL INDICATOR
3 - SPECIAL SCREWS TOOL 6260
4 - OUTPUT GEAR

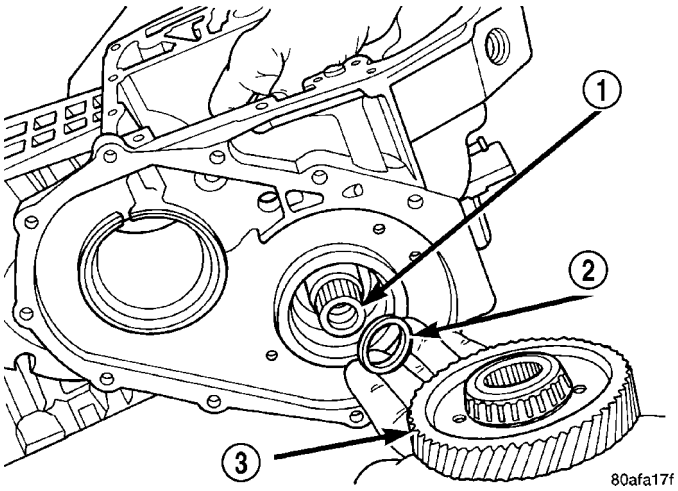

Fig. 108 Output Gear and (Select) Shim

1 - REAR CARRIER ASSEMBLY
2 - SHIM (SELECT)
3 - OUTPUT GEAR

41TE AUTOMATIC TRANSAXLE (Continued)

OUTPUT GEAR BEARING SHIM CHART

End Play	Shim Needed	Part Number	End Play	Shim Needed	Part Number
0.05mm (0.002 in.)	4.42mm (0.174 in.)	4412830AB	0.53mm (0.021 in.)	3.94mm (0.155 in.)	4412818AB
0.08mm (0.003 in.)	4.38mm (0.172 in.)	4412829AB	0.56mm (0.022 in.)	3.90mm (0.154 in.)	4412817AB
0.10mm (0.004 in.)	4.38mm (0.172 in.)	4412829AB	0.58mm (0.023 in.)	3.90mm (0.154 in.)	4412817AB
0.13mm (0.005 in.)	4.34mm (0.171 in.)	4412828AB	0.61mm (0.024 in.)	3.86mm (0.152 in.)	4412816AB
0.15mm (0.006 in.)	4.30mm (0.169 in.)	4412827AB	0.64mm (0.025 in.)	3.82mm (0.150 in.)	4412815AB
0.18mm (0.007 in.)	4.30mm (0.169 in.)	4412827AB	0.66mm (0.026 in.)	3.82mm (0.150 in.)	4412815AB
0.20mm (0.008 in.)	4.26mm (0.168 in.)	4412826AB	0.69mm (0.027 in.)	3.78mm (0.149 in.)	4412814AB
0.23mm (0.009 in.)	4.22mm (0.166 in.)	4412825AB	0.71mm (0.028 in.)	3.74mm (0.147 in.)	4412813AB
0.25mm (0.010 in.)	4.22mm (0.166 in.)	4412825AB	0.74mm (0.029 in.)	3.74mm (0.147 in.)	4412813AB
0.28mm (0.011 in.)	4.18mm (0.165 in.)	4412824AB	0.76mm (0.030 in.)	3.70mm (0.146 in.)	4412812AB
0.30mm (0.012 in.)	4.14mm (0.163 in.)	4412823AB	0.79mm (0.031 in.)	3.66mm (0.144 in.)	4412811AB
0.33mm (0.013 in.)	4.14mm (0.163 in.)	4412823AB	0.81mm (0.032 in.)	3.66mm (0.144 in.)	4412811AB
0.36mm (0.014 in.)	4.10mm (0.161 in.)	4412822AB	0.84mm (0.033 in.)	3.62mm (0.143 in.)	4412810AB
0.38mm (0.015 in.)	4.10mm (0.161 in.)	4412822AB	0.86mm (0.034 in.)	3.62mm (0.143 in.)	4412810AB
0.41mm (0.016 in.)	4.06mm (0.160 in.)	4412821AB	0.89mm (0.035 in.)	3.58mm (0.141)	4412809AB
0.43mm (0.017 in.)	4.02mm (0.158 in.)	4412820AB	0.91mm (0.036in.)	3.54mm (0.139 in.)	4412808AB
0.46mm (0.018 in.)	4.02mm (0.158 in.)	4412820AB	0.94mm (0.037 in.)	3.54mm (0.139 in.)	4412808AB
0.48mm (0.019 in.)	3.98mm (0.157 in.)	4412819AB	0.97mm (0.038 in.)	3.50mm (0.138 in.)	4412807AB
0.51mm (0.020 in.)	3.94mm (0.155 in.)	4412818AB			

41TE AUTOMATIC TRANSAXLE (Continued)

(15) Install the output gear and bearing assembly using Tool 6261 (Fig. 109).

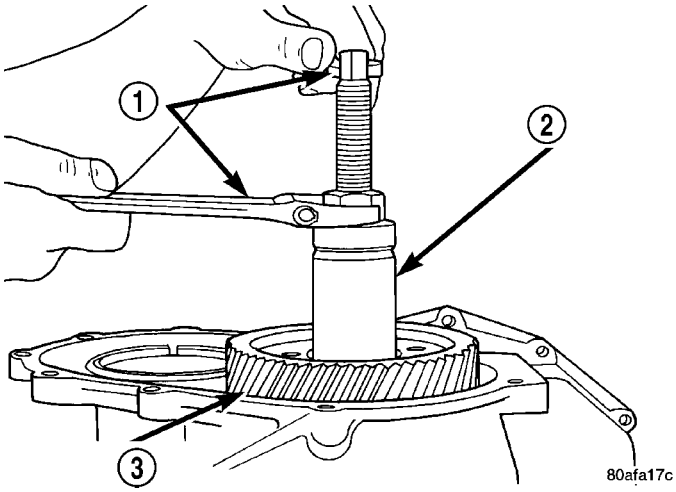

Fig. 109 Install Output Gear

1 - WRENCHES
2 - TOOL 6261 WITH STUD
3 - OUTPUT GEAR

(16) Install NEW output gear retaining bolt and washer (Fig. 110). Using Tool 6259, torque output gear retaining bolt to 271 N·m (200 ft. lbs.) (Fig. 111).

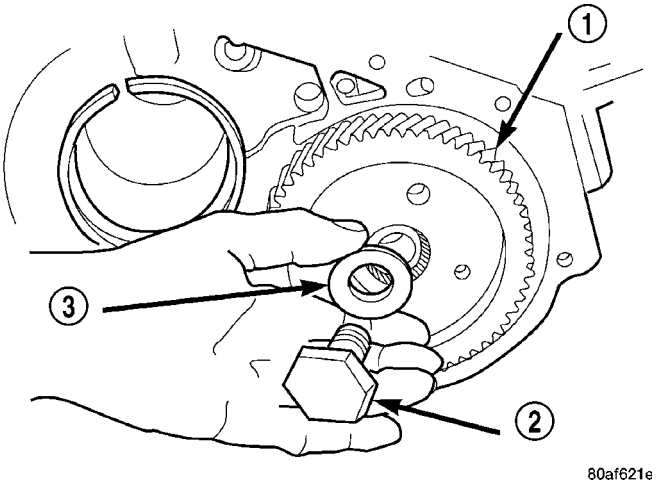

Fig. 110 Output Gear Bolt and Washer

1 - OUTPUT GEAR
2 - BOLT
3 - CONED LOCK WASHER

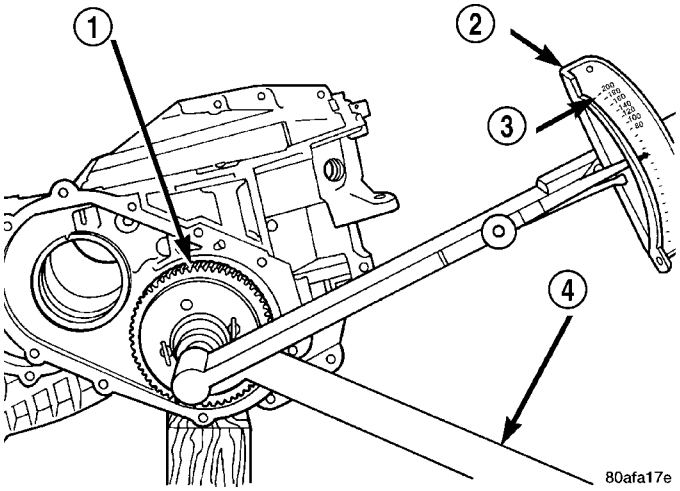

Fig. 111 Tighten Output Gear to 271 N•m (200 ft. lbs.)

1 - OUTPUT GEAR
2 - TORQUE WRENCH
3 - 200 FT. LBS.
4 - TOOL 6259

(17) Using an inch pound torque wrench (Fig. 112), check output shaft turning torque. **Output shaft turning torque should be within 3-8 in. lbs.** If the turning torque is too high, install a 0.04 mm (0.0016 in.) thicker shim. If the turning torque is too low, install a 0.04 mm (0.0016 in.) thinner shim. Repeat until the proper turning torque of 3-8 in. lbs. is obtained.

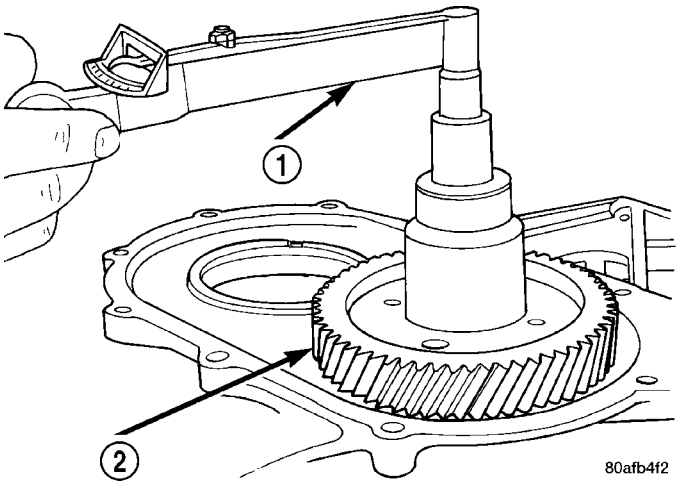

Fig. 112 Check Output Gear Bearings Turning Torque

1 - INCH-POUND TORQUE WRENCH
2 - OUTPUT GEAR

41TE AUTOMATIC TRANSAXLE (Continued)

(18) Install output gear stirrup with serrated side out (Fig. 113).

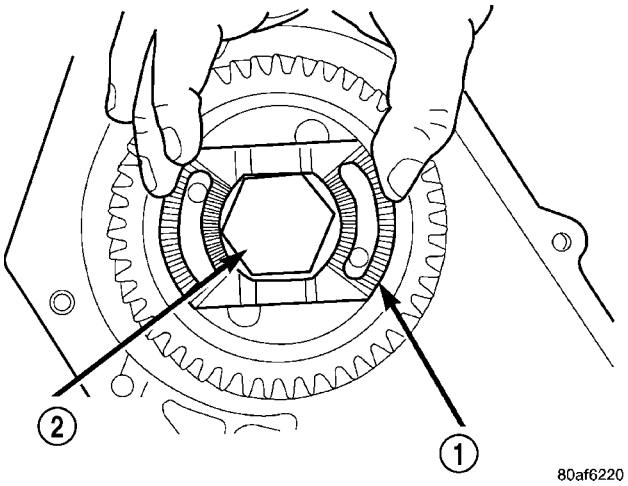

Fig. 113 Install Stirrup

1 - STIRRUP
2 - OUTPUT GEAR RETAINING BOLT

(19) Install retaining strap.

(20) Install strap bolts but do not tighten at this time (Fig. 114).

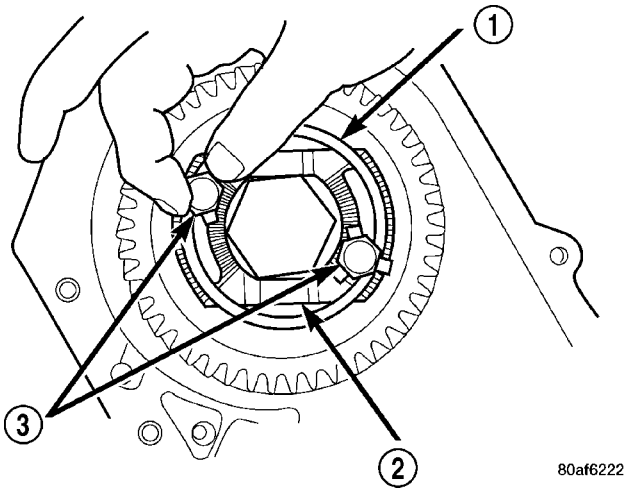

Fig. 114 Install Strap Bolts

1 - RETAINING STRAP
2 - STIRRUP
3 - RETAINING STRAP BOLTS

(21) Rotate stirrup clockwise against flats of retaining bolt (Fig. 115).

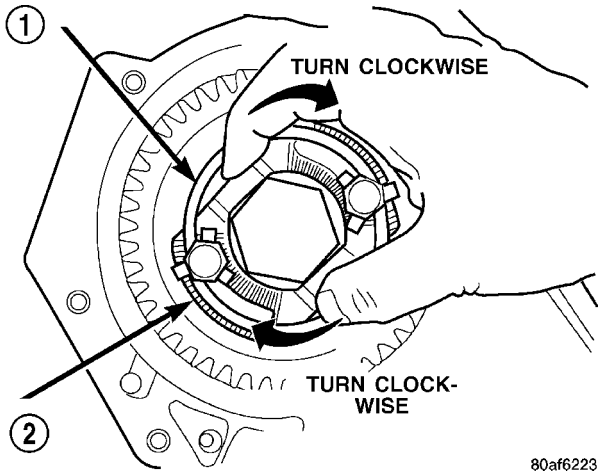

Fig. 115 Turn Stirrup Clockwise Against Bolt Flats

1 - RETAINING STRAP
2 - STIRRUP

(22) Torque stirrup strap bolts to 23 N·m (200 in. lbs.) (Fig. 116).

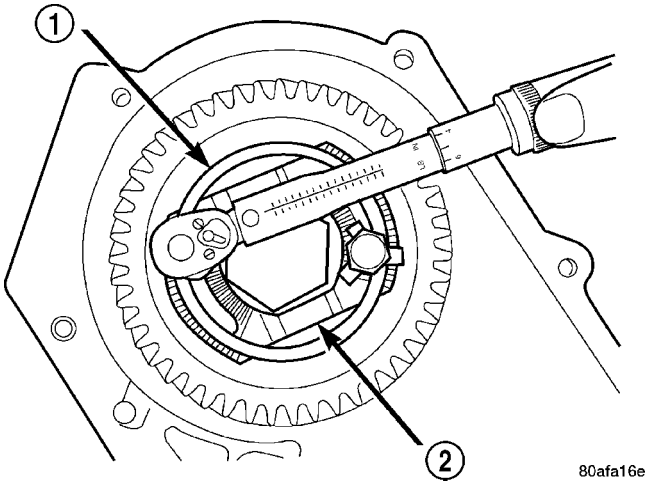

Fig. 116 Tighten Stirrup Strap Bolts To 23 N·m (200 in.) lbs.)

1 - RETAINING STRAP
2 - STIRRUP

41TE AUTOMATIC TRANSAXLE (Continued)

(23) Bend tabs on strap up against flats of bolts (Fig. 117).

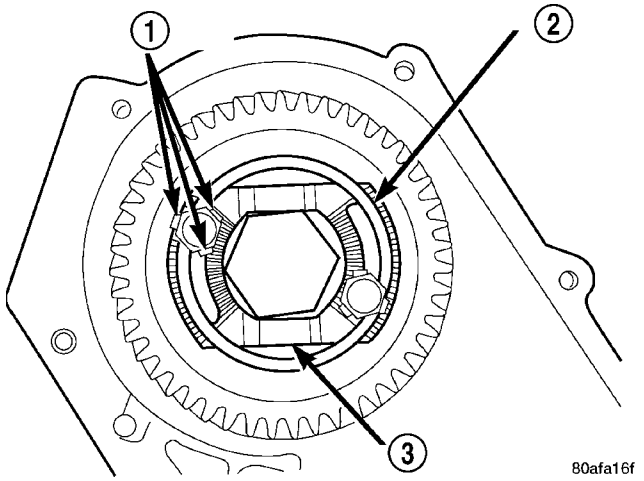

Fig. 117 Bend Tabs On Strap Up Against Flats Of Bolts

1 - RETAINING STRAP TABS
2 - RETAINING STRAP
3 - STIRRUP

(24) Install transfer shaft bearing cone using Tool 6052 (Fig. 118).

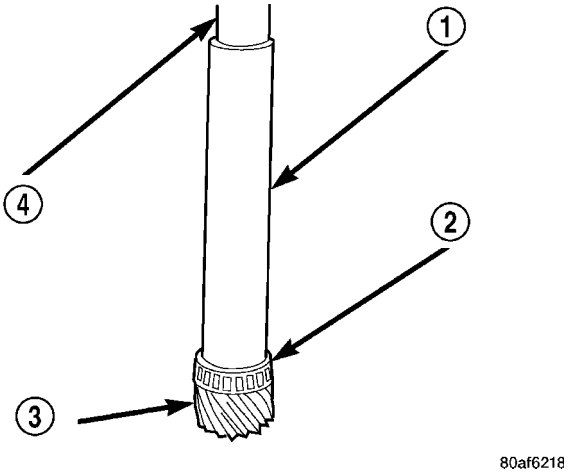

Fig. 118 Install Transfer Shaft Bearing Cone

1 - TOOL 6052
2 - NEW BEARING CONE
3 - TRANSFER SHAFT
4 - ARBOR PRESS RAM

(25) Install bearing cup and oil baffle to transfer shaft (Fig. 119).

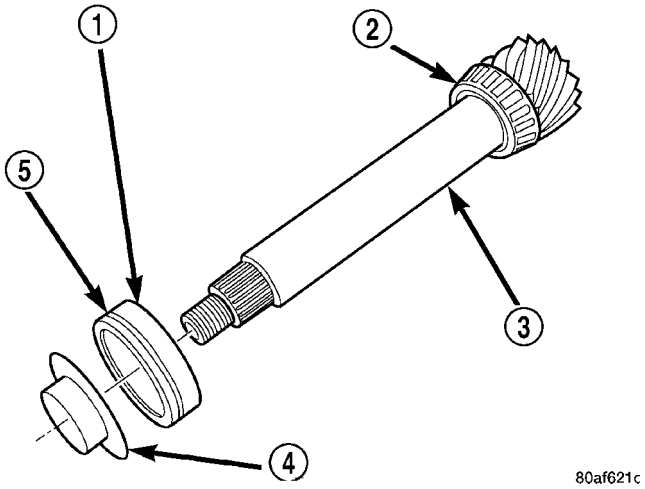

Fig. 119 Install Bearing Cup to Shaft

1 - BEARING CUP
2 - BEARING CONE
3 - TRANSFER SHAFT
4 - OIL BAFFLE
5 - O-RING

(26) Using Tool 5049A, install transfer shaft (Fig. 120).

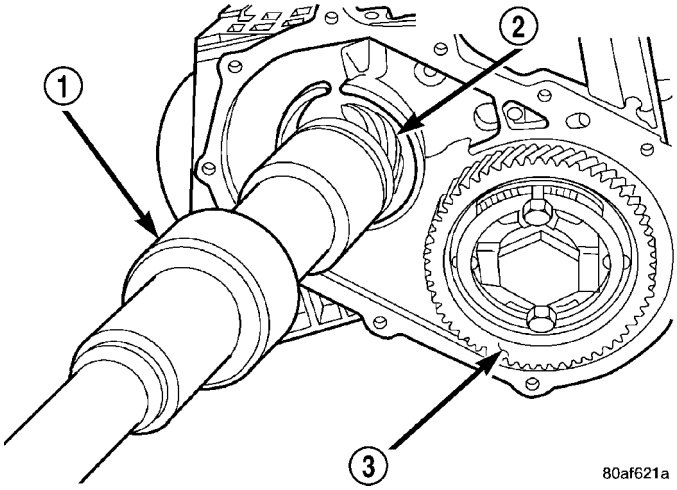

Fig. 120 Install Transfer Shaft

1 - SPECIAL TOOL 5049–A
2 - TRANSFER SHAFT
3 - OUTPUT GEAR

41TE AUTOMATIC TRANSAXLE (Continued)

(27) Using Tool 6051, install transfer shaft bearing snap ring (Fig. 121).

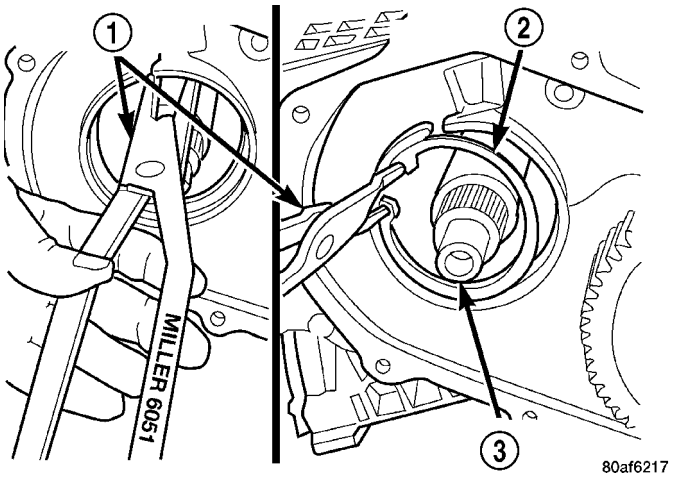

Fig. 121 Install Transfer Shaft Bearing Snap Ring

1 - SNAP RING PLIERS TOOL 6051
2 - TRANSFER SHAFT BEARING SNAP RING
3 - TRANSFER SHAFT

(28) Install transfer shaft bearing cup into retainer using Tool 6061 (Fig. 122).

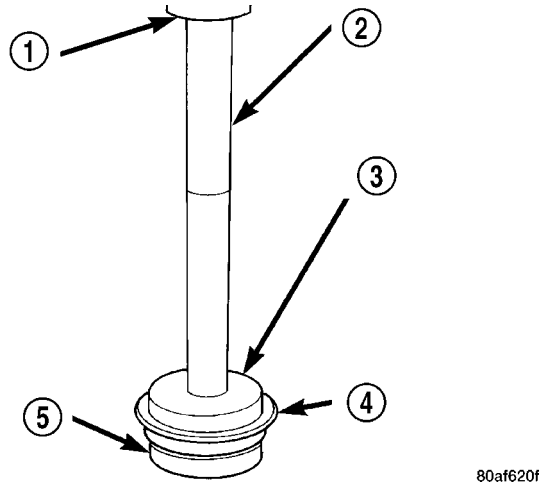

Fig. 122 Install Transfer Shaft Bearing Cup Into Retainer

1 - ARBOR PRESS RAM
2 - HANDLE C-4171
3 - TOOL 6061
4 - TRANSFER SHAFT BEARING CUP RETAINER
5 - USE REMOVED BEARING CUP TO SUPPORT RETAINER

(29) Install bearing cup retainer to transaxle (Fig. 123).

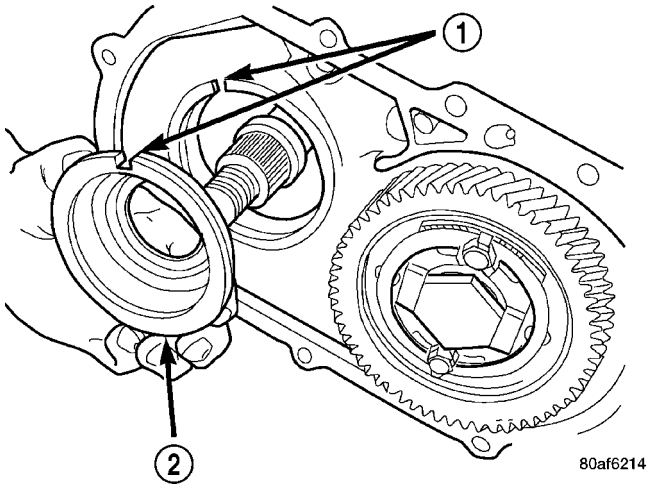

Fig. 123 Remove Bearing Cup Retainer

1 - ALIGN INDEXING TAB TO SLOT
2 - BEARING CUP RETAINER

(30) Install transfer gear bearing cone to transfer gear using Tool 5052 (Fig. 124).

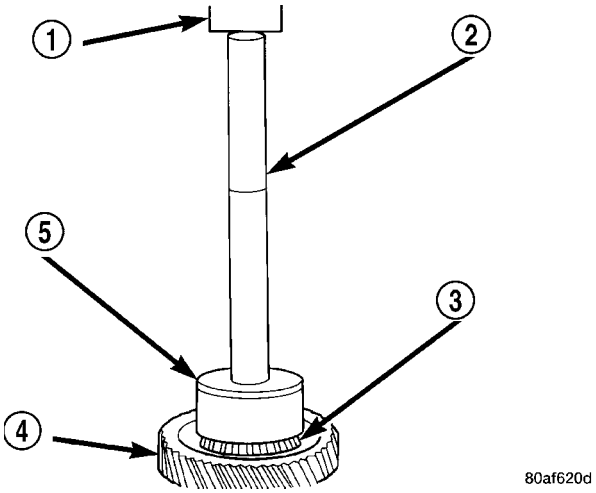

Fig. 124 Install Transfer Gear Bearing Cone

1 - ARBOR PRESS RAM
2 - HANDLE C-4171
3 - NEW BEARING CONE
4 - TRANSFER SHAFT GEAR
5 - TOOL 5052

41TE AUTOMATIC TRANSAXLE (Continued)

(31) **TRANSFER GEAR BEARING ADJUSTMENT:**

(a) Install a 4.66 mm (0.184 in.) gauging shim on the transfer shaft (Fig. 125).

(b) Install transfer shaft gear using Tool 6261. Using Tool 6259, install transfer shaft gear retaining nut to 271 N·m (200 ft. lbs.).

(c) Measure end play. Attach Tool L4432 to the transfer gear.

(d) Mount a steel ball with grease into the end of the transfer shaft.

(e) Push and pull the gear while rotating back and forth to ensure seating of the bearing rollers.

(f) Using a dial indicator, measure transfer shaft end play.

(g) Refer to the transfer shaft bearing shim chart for the required shim combination to obtain the proper bearing setting.

(h) Use Tool 6259 to remove the retaining nut and washer. Remove the transfer shaft gear using Tool L4407A.

(i) Remove the gauging shim (Fig. 125) and install the proper shim indicated by the chart.

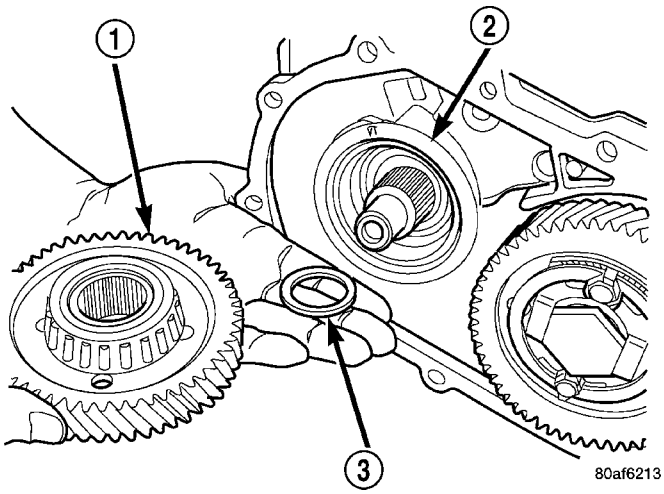

Fig. 125 Install Transfer Shaft Gear and (Select) Shim

1 - TRANSFER SHAFT GEAR
2 - BEARING CUP RETAINER
3 - SHIM (SELECT)

41TE AUTOMATIC TRANSAXLE (Continued)

TRANSFER SHAFT BEARING SHIM CHART

End Play	Shim Needed	Part Number	End Play	Shim Needed	Part Number
0.05mm (0.002 in.)	4.66mm (0.183 in.)	4505588AB	0.76mm (0.030 in.)	3.94mm (0.155 in.)	4412818AB
0.08mm (0.003 in.)	4.62mm (0.182 in.)	4412835AB	0.79mm (0.031 in.)	3.90mm (0.154 in.)	4412817AB
0.10mm (0.004 in.)	4.58mm (0.180 in.)	4412834AB	0.81mm (0.032 in.)	3.90mm (0.154 in.)	4412817AB
0.13mm (0.005 in.)	4.58mm (0.180 in.)	4412834AB	0.84mm (0.033 in.)	3.86mm (0.152 in.)	4412816AB
0.15mm (0.006 in.)	4.54mm (0.178 in.)	4412833AB	0.86mm (0.034 in.)	3.82mm (0.150 in.)	4412815AB
0.18mm (0.007 in.)	4.50mm (0.177 in.)	4412832AB	0.89mm (0.035 in.)	3.82mm (0.150 in.)	4412815AB
0.20mm (0.008 in.)	4.50mm (0.177 in.)	4412832AB	0.91mm (0.036 in.)	3.78mm (0.149 in.)	4412814AB
0.23mm (0.009 in.)	4.46mm (0.175 in.)	4412831AB	0.94mm (0.037 in.)	3.74mm (0.147 in.)	4412813AB
0.25mm (0.010 in.)	4.46mm (0.175 in.)	4412831AB	0.97mm (0.038 in.)	3.74mm (0.147 in.)	4412813AB
0.28mm (0.011 in.)	4.42mm (0.174 in.)	4412830AB	0.99mm (0.039 in.)	3.70mm (0.146 in.)	4412812AB
0.30mm (0.012 in.)	4.38mm (0.172 in.)	4412829AB	1.02mm (0.040 in.)	3.66mm (0.144 in.)	4412811AB
0.33mm (0.013 in.)	4.38mm (0.172 in.)	4412829AB	1.04mm (0.041 in.)	3.66mm (0.144 in.)	4412811AB
0.36mm (0.014 in.)	4.34mm (0.171 in.)	4412828AB	1.07mm (0.042 in.)	3.62mm (0.143 in.)	4412810AB
0.38mm (0.015 in.)	4.30mm (0.169 in.)	4412827AB	1.08mm (0.043 in.)	3.62mm (0.143 in.)	4412810AB
0.41mm (0.016 in.)	4.30mm (0.169 in.)	4412827AB	1.12mm (0.044 in.)	3.58mm (0.141)	4412809AB
0.43mm (0.017 in.)	4.26mm (0.168 in.)	4412826AB	1.14mm (0.045 in.)	3.54mm (0.139 in.)	4412808AB
0.46mm (0.018 in.)	4.22mm (0.166 in.)	4412825AB	1.17mm (0.046 in.)	3.54mm (0.139 in.)	4412808AB
0.48mm (0.019 in.)	4.22mm (0.166 in.)	4412825AB	1.19mm (0.047 in.)	3.50mm (0.138 in.)	4412807AB
0.50mm (0.020 in.)	4.18mm (0.165 in.)	4412824AB	1.22mm (0.048 in.)	3.46mm (0.136 in.)	4412806AB
0.53mm (0.021 in.)	4.18mm (0.165 in.)	4412824AB	1.24mm (0.049 in.)	3.46mm (0.136 in.)	4412806AB
0.56mm (0.022 in.)	4.14mm (0.163 in.)	4412823AB	1.27mm (0.050 in.)	3.42mm (0.135 in.)	4412805AB
0.58mm (0.023 in.)	4.10mm (0.161 in.)	4412822AB	1.30mm (0.051 in.)	3.38mm (0.133 in.)	4412804AB
0.61mm (0.024 in.)	4.10mm (0.161 in.)	4412822AB	1.32mm (0.052 in.)	3.38mm (0.133 in.)	4412804AB
0.64mm (0.025 in.)	4.06mm (0.160 in.)	4412821AB	1.35mm (0.053 in.)	3.34mm (0.132 in.)	4412803AB
0.66mm (0.026 in.)	4.02mm (0.158 in.)	4412820AB	1.37mm (0.054 in.)	3.34mm (0.132 in.)	4412803AB
0.69mm (0.027 in.)	4.02mm (0.158 in.)	4412820AB	1.40mm (0.055 in.)	3.30mm (0.130 in.)	4412802AB
0.71mm (0.028 in.)	3.98mm (0.157 in.)	4412819AB	1.45mm (0.057 in	3.26mm (0.128 in.)	4412801AB
0.74mm (0.029 in.)	3.94mm (0.155 in.)	4412818AB	1.47mm (0.058 in.)	2.22mm (0.127 in.)	4505570AB

41TE AUTOMATIC TRANSAXLE (Continued)

(32) Install the transfer shaft gear using Tool 6261 (Fig. 126).

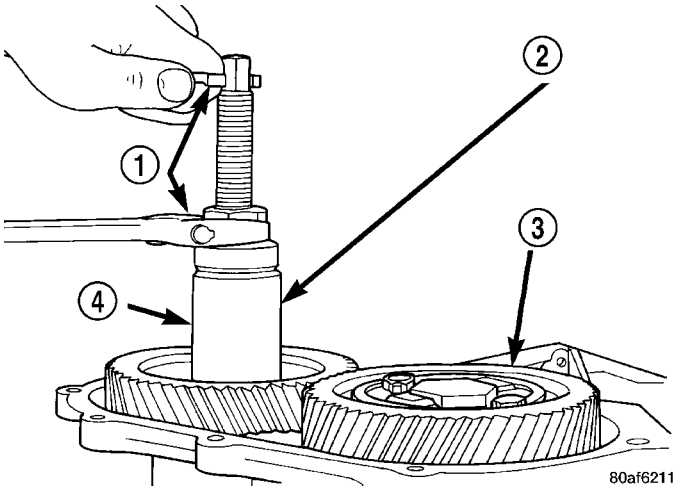

Fig. 126 Install Transfer Shaft Gear

1 - WRENCHES
2 - SPECIAL TOOL 6261
3 - OUTPUT GEAR
4 - TRANSFER SHAFT GEAR

CAUTION: Install a NEW retaining nut, as the original nut MUST NOT be reused.

(33) Install the new retaining nut and washer.

(34) Using Tool 6259, torque transfer gear retaining nut to 271 N·m (200 ft. lbs.) (Fig. 127).

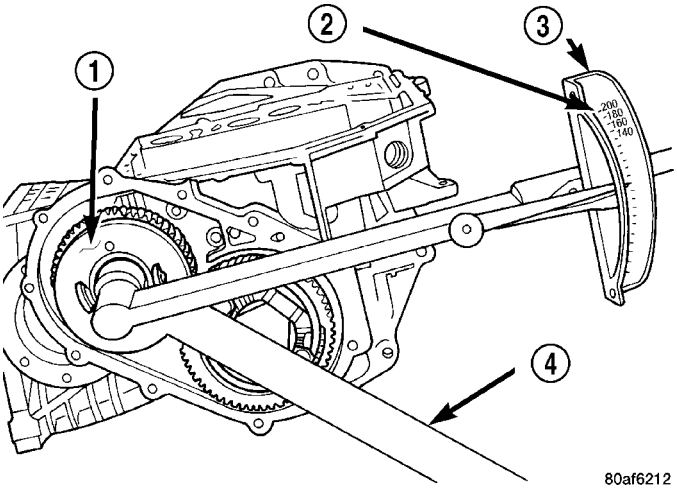

Fig. 127 Tighten Transfer Gear Nut to 271 N•m (200 ft. lbs.)

1 - TRANSFER SHAFT GEAR
2 - 200 FT. LBS.
3 - TORQUE WRENCH
4 - SPECIAL TOOL 6259

(35) Measure transfer shaft end play. **Transfer shaft end play should be within 0.05-0.10 mm (0.002-0.004 in.).** If the end play is too high, install a 0.04 mm (0.0016 in.) thicker shim. If the end play is too low, install a 0.04 mm (0.0016 in.) thinner shim. Repeat until 0.05-0.10 mm (0.002-0.004 in.) end play is obtained.

(36) Install a bead of Mopar® ATF RTV (MS-GF41) to transfer gear cover (Fig. 128).

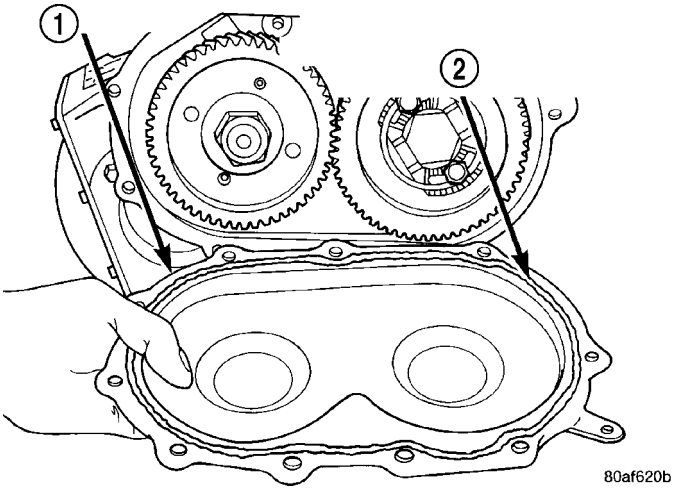

Fig. 128 Install Rear Cover

1 - REAR COVER
2 - 1/8 INCH BEAD OF MOPAR® ATF RTV (MS-GF41) AS SHOWN

(37) Install transfer gear cover-to-case bolts and torque to 20 N·m (175 in. lbs.) torque (Fig. 129).

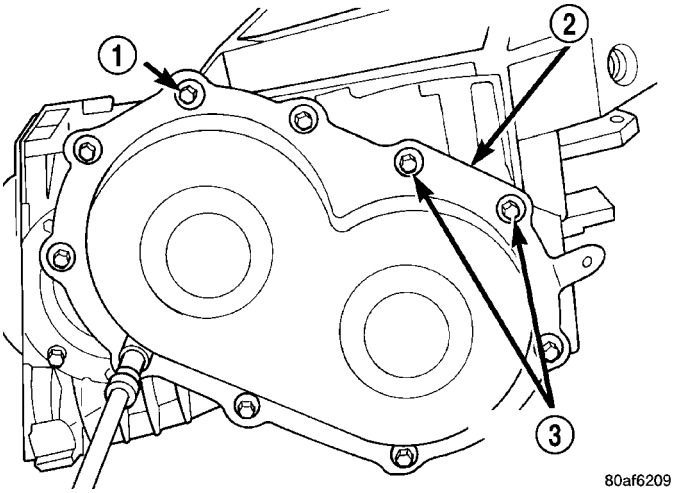

Fig. 129 Install Rear Cover Bolts

1 - REAR COVER BOLTS
2 - REAR COVER
3 - USE SEALANT ON BOLTS

41TE AUTOMATIC TRANSAXLE (Continued)

(38) Install low/reverse clutch pack (Fig. 130). Leave uppermost disc out until snap ring is installed.

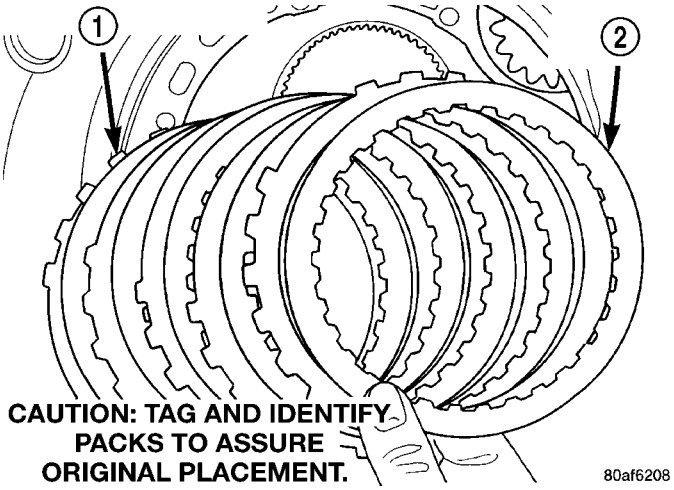

Fig. 130 Install Low/Reverse Clutch Pack

1 - CLUTCH PLATES (5)
2 - CLUTCH DISCS (5)

(39) Install low/reverse reaction plate flat snap ring (Fig. 131).

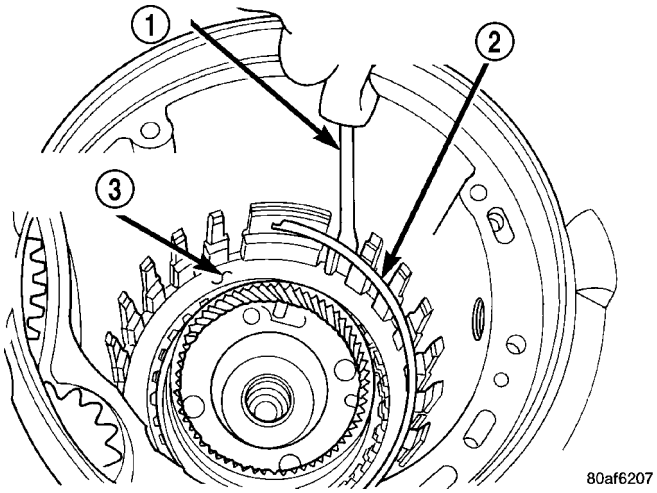

Fig. 131 Install Low/Reverse Reaction Plate Snap Ring

1 - SCREWDRIVER
2 - LOW/REVERSE REACTION PLATE FLAT SNAP RING
3 - DO NOT SCRATCH CLUTCH PLATE

(40) Install remaining low/reverse clutch disc (Fig. 132).

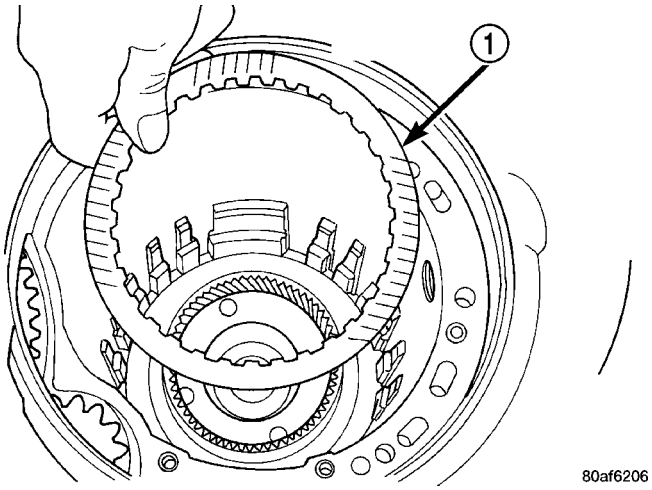

Fig. 132 Install One Disc

1 - ONE DISC FROM LOW/REVERSE CLUTCH

(41) Install low/reverse reaction plate with flat side up (Fig. 133).

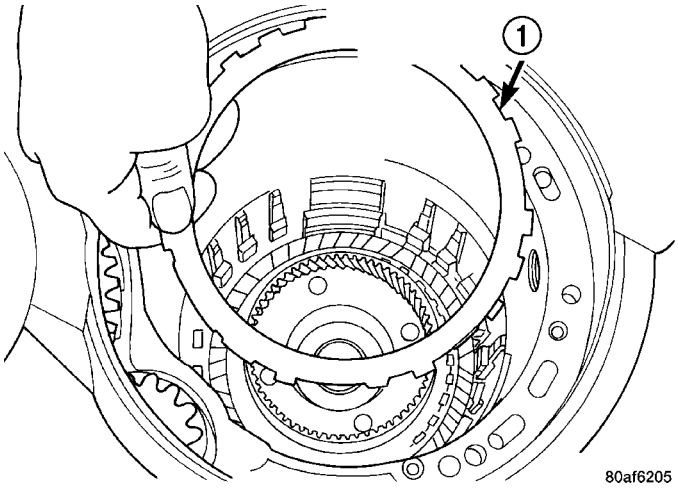

Fig. 133 Install Low/Reverse Reaction Plate

1 - LOW/REVERSE REACTION PLATE (FLAT SIDE UP)

41TE AUTOMATIC TRANSAXLE (Continued)

(42) Install tapered snap ring (with tapered side up) as shown in (Fig. 134) (Fig. 135).

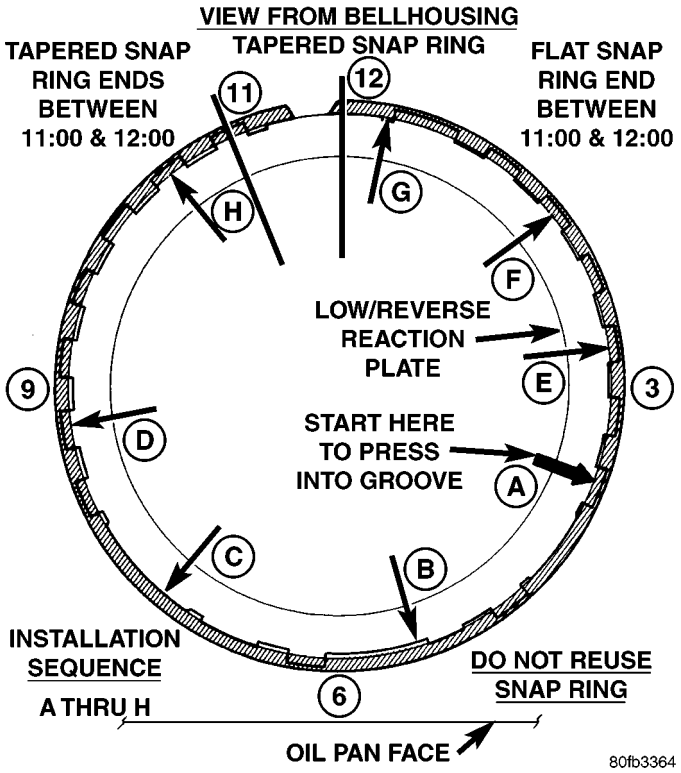

Fig. 134 Tapered Snap Ring Instructions

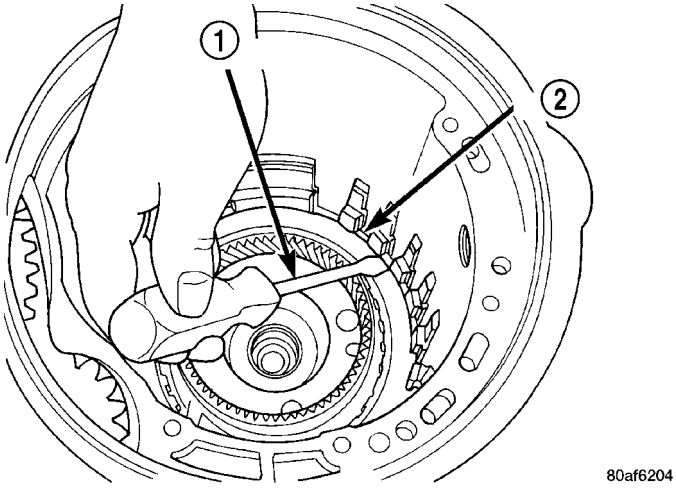

Fig. 135 Snap Ring Installed

1 - SCREWDRIVER
2 - TAPERED SNAP RING (INSTALL AS SHOWN)

(43) Set up dial indicator as shown in (Fig. 136) to measure low/reverse clutch clearance. Press down on clutch pack with finger and zero dial indicator. **Low/Reverse clutch pack clearance is 0.89-1.47 mm (0.035-0.058 in.)**. Set up indicator and record measurement in four (4) places. Take average of readings and select the proper low/reverse reaction plate to achieve specifications.

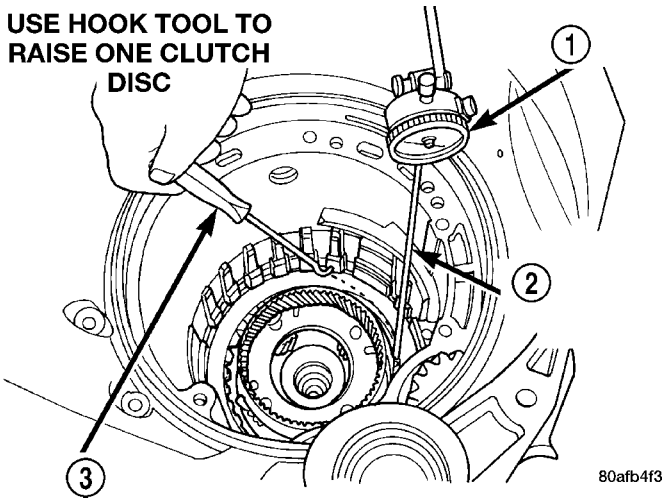

Fig. 136 Check Low/Reverse Clutch Clearance

1 - DIAL INDICATOR
2 - DIAL INDICATOR TIP TOOL 6268
3 - HOOK TOOL

LOW/REVERSE REACTION PLATE CHART

PART NUMBER	THICKNESS
4799846AA	5.88 mm (0.232 in.)
4799847AA	6.14 mm (0.242 in.)
4799848AA	6.40 mm (0.252 in.)
4799849AA	6.66 mm (0.262 in.)
4799855AA	6.92 mm (0.273 in.)

(44) Install 2/4 clutch pack (Fig. 137).

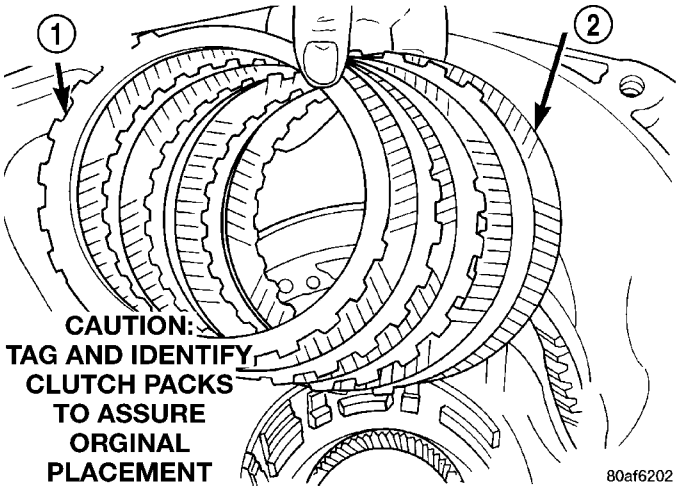

Fig. 137 Install 2/4 Clutch Pack

1 - CLUTCH PLATE (4)
2 - CLUTCH DISC (4)

41TE AUTOMATIC TRANSAXLE (Continued)

(45) Orient 2/4 clutch return spring to retainer as shown in (Fig. 138), and install to transaxle (Fig. 139).

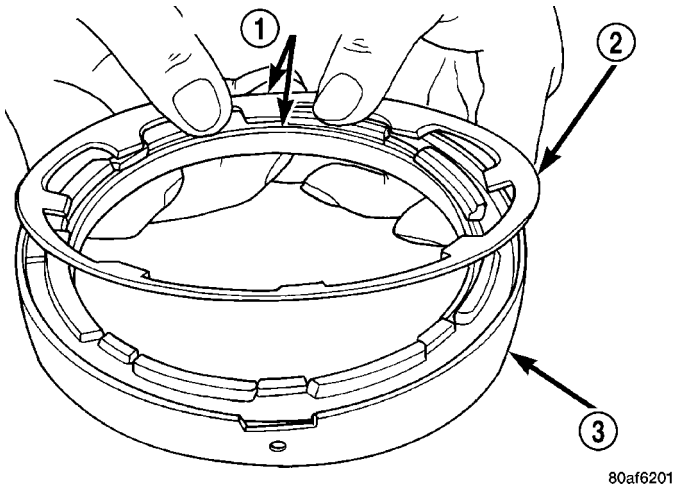

Fig. 138 Proper Orientation of 2/4 Clutch Retainer and Spring

1 - NOTE POSITION
2 - RETURN SPRING
3 - 2/4 CLUTCH RETAINER

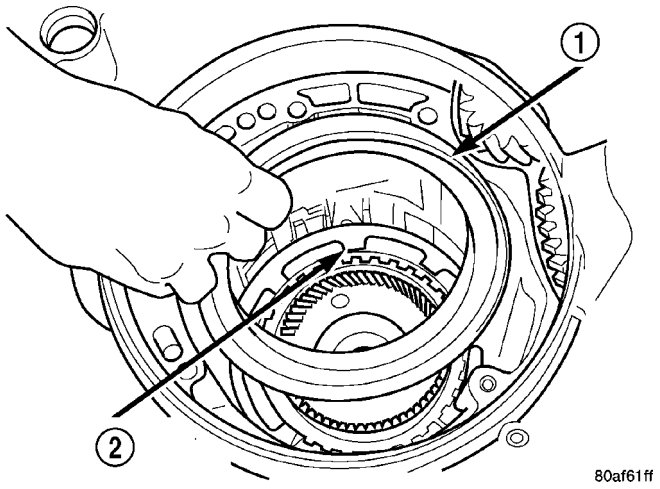

Fig. 139 2/4 Clutch Retainer

1 - 2/4 CLUTCH RETAINER
2 - 2/4 CLUTCH RETURN SPRING

(46) Using tool 5058, compress 2/4 clutch return spring just enough to install snap ring (Fig. 140).

(47) Install snap ring.

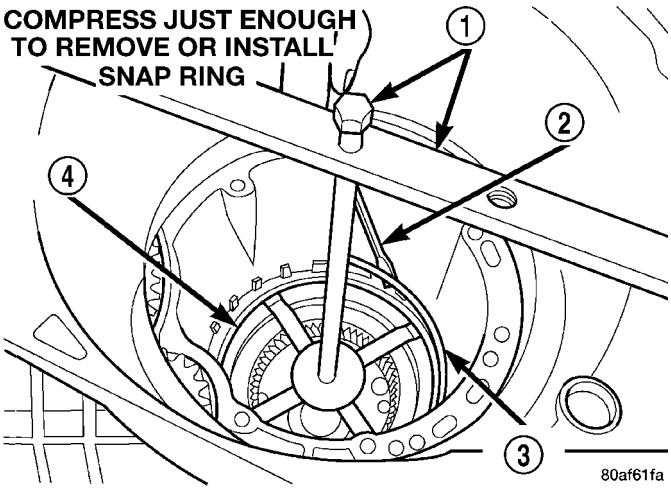

Fig. 140 Install 2/4 Clutch Retainer Snap Ring

1 - TOOL 5058
2 - SCREWDRIVER
3 - SNAP RING
4 - 2/4 CLUTCH RETAINER

(48) Set up dial indicator as shown in (Fig. 141) and measure 2/4 clutch clearance. Press down on clutch pack with finger and zero dial indicator. **2/4 clutch pack clearance is 0.76-2.64 mm (0.030-0.104 in.).** Set up indicator and record measurement in four (4) places. Take average of readings. If clearance is outside this range, the clutch is assembled improperly. **There is no adjustment for 2/4 clutch clearance.**

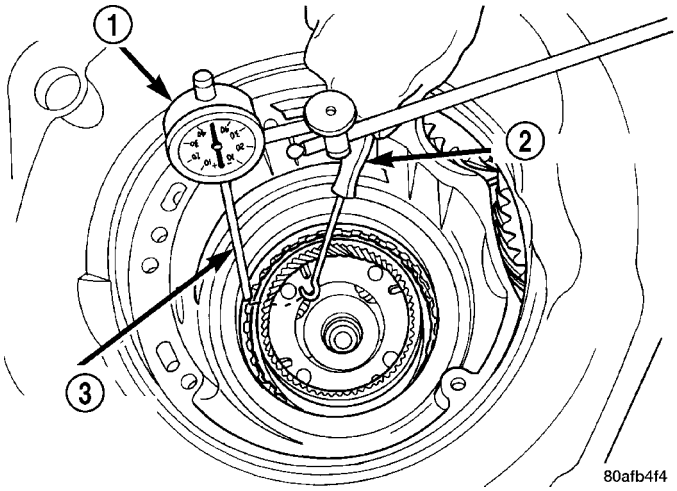

Fig. 141 Check 2/4 Clutch Clearance

1 - DIAL INDICATOR
2 - HOOK TOOL
3 - DIAL INDICATOR TIP TOOL 6268

41TE AUTOMATIC TRANSAXLE (Continued)

(49) Install rear sun gear and #7 needle bearing (Fig. 143).

NOTE: The number seven needle bearing has three anti-reversal tabs and is common with the number five and number two position. The orientation should allow the bearing to seat flat against the rear sun gear (Fig. 142). A small amount of petrolatum can be used to hold the bearing to the rear sun gear.

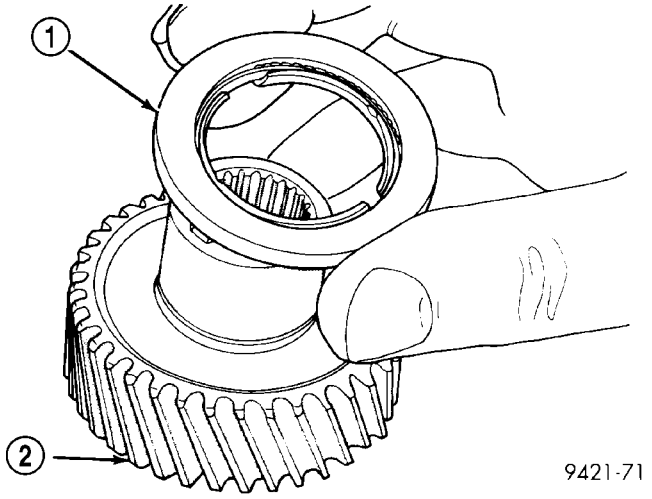

Fig. 142 Number 7 Bearing

1 - #7 NEEDLE BEARING
2 - REAR SUN GEAR

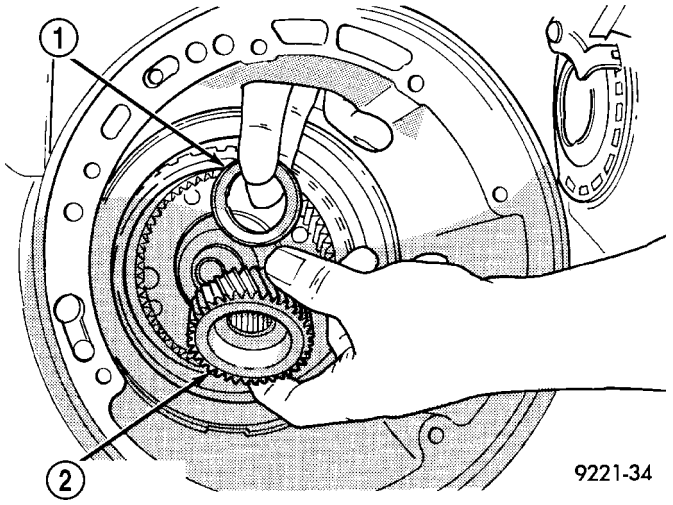

Fig. 143 Install Rear Sun Gear and #7 Needle Bearing

1 - #7 NEEDLE BEARING
2 - REAR SUN GEAR

(50) Install front carrier/rear annulus assembly and #6 needle bearing (Fig. 144).

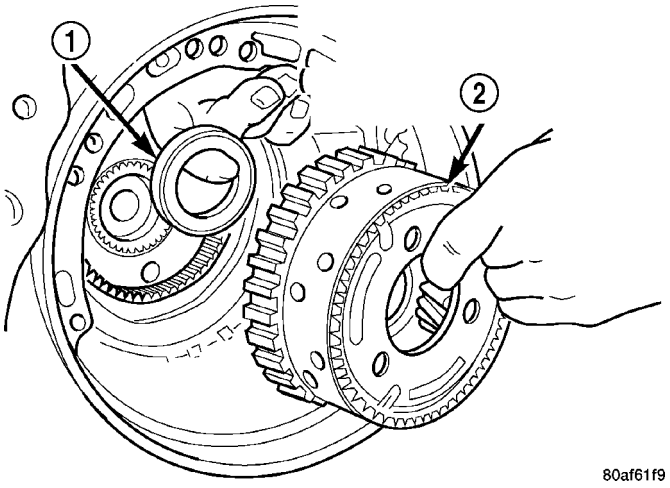

Fig. 144 Install Front Carrier and Rear Annulus Assembly

1 - #6 NEEDLE BEARING
2 - FRONT CARRIER AND REAR ANNULUS ASSEMBLY (TWIST AND PULL OR PUSH TO REMOVE OR INSTALL).

(51) Install front sun gear assembly and #4 thrust washer (Fig. 145).

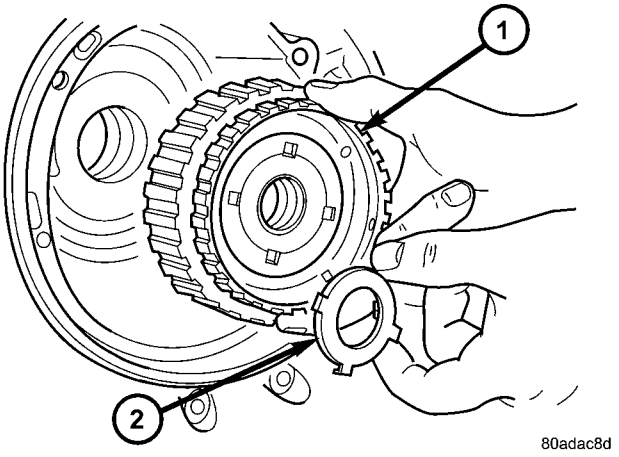

Fig. 145 Install Front Sun Gear Assembly

1 - FRONT SUN GEAR ASSEMBLY
2 - #4 THRUST WASHER (FOUR TABS)

(52) **DETERMINING #4 THRUST PLATE THICKNESS / INPUT SHAFT END PLAY:**

(a) Select the thinnest #4 thrust plate thickness and install to input clutch assembly (Fig. 146). Use petrolatum to retain.

(b) Install input clutch assembly into position and verify that it is completely seated by viewing through input speed sensor hole. If view through input speed sensor hole is not as shown in (Fig. 147), the input clutch assembly is not seated properly.

41TE AUTOMATIC TRANSAXLE (Continued)

(c) Remove oil pump o-ring (Fig. 148). **Be sure to reinstall oil pump o-ring after selecting the proper #4 thrust plate.**

(d) Install pump and gasket to transmission. Install and torque bolts.

(e) Set up input shaft for measurement with Indicator Set C3339 and End Play Set 8266 as shown in (Fig. 149).

(f) Measure the input shaft end play with the transaxle in the vertical position. **Input shaft end play must be within 0.005 to 0.025 inch.** For example, if end play reading is 0.055 inch, select No. 4 Thrust Plate which is 0.071 to 0.074 thick. This should provide an input shaft end play reading of 0.020 inch which is within specifications.

(g) Refer to the No. 4 thrust plate chart to select the proper No. 4 thrust plate:

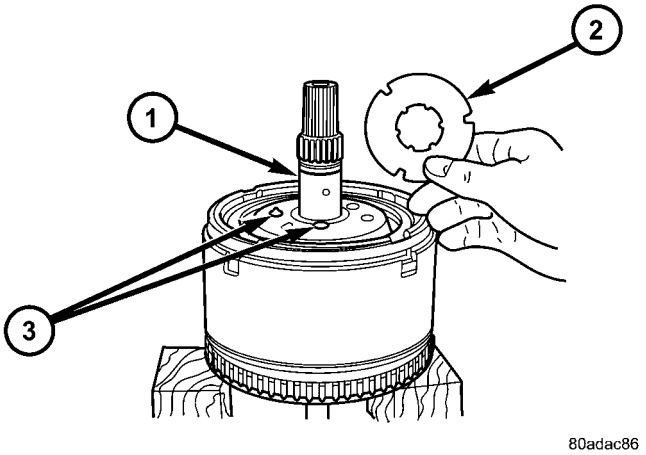

Fig. 146 Select Thinnest No. 4 Thrust Plate

1 - OVERDRIVE SHAFT ASSEMBLY
2 - #4 THRUST PLATE (SELECT)
3 - 3 DABS OF PETROLATUM FOR RETENTION

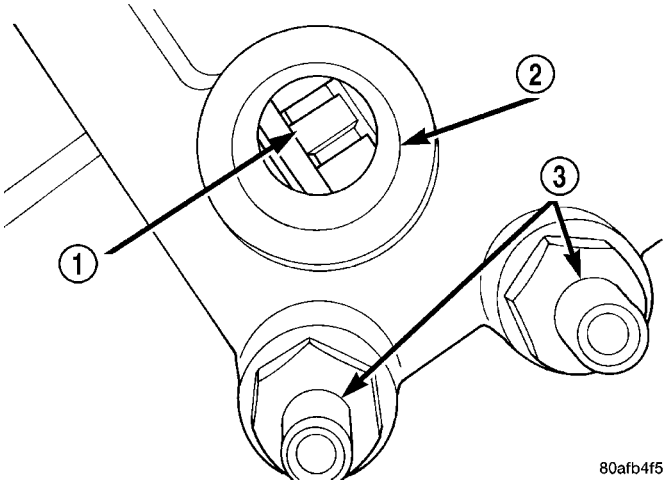

Fig. 147 View Through Input Speed Sensor Hole

1 - INPUT CLUTCH RETAINER
2 - INPUT SPEED SENSOR HOLE
3 - OIL COOLER FITTINGS

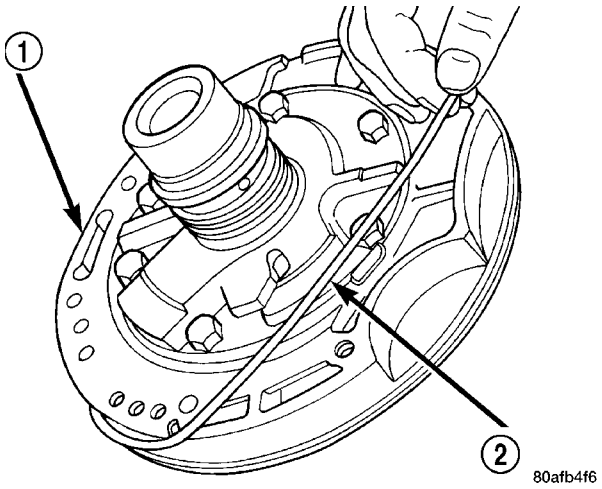

Fig. 148 Remove Oil Pump O-Ring

1 - OIL PUMP ASSEMBLY
2 - O-RING

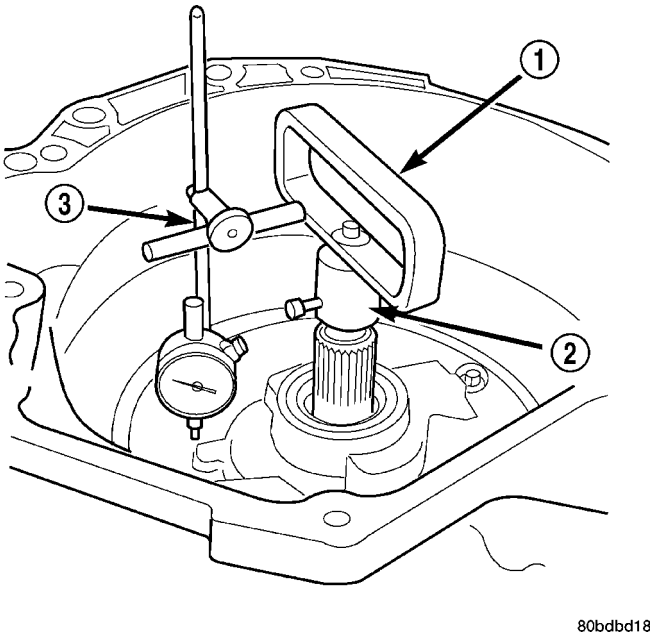

Fig. 149 Measure Input Shaft End Play Using End Play Set 8266

1 - TOOL 8266–8
2 - TOOL 8266–2
3 - TOOL C-3339

NO. 4 THRUST PLATE CHART

PART NUMBER	THICKNESS
4431665AB	1.60mm (0.063 in.)
3836237AB	1.73mm (0.068 in.)
4431666AB	1.80mm (0.071 in.)
3836238AB	1.96mm (0.077 in.)
4431667AB	2.03mm (0.080 in.)

41TE AUTOMATIC TRANSAXLE (Continued)

PART NUMBER	THICKNESS
3836239AB	2.16mm (0.085 in.)
4431668AB	2.24mm (0.088 in.)
3836240AB	2.39mm (0.094 in.)
4431669AB	2.46mm (0.097 in.)
3836241AB	2.62mm (0.103 in.)
4446670AB	2.67mm (0.105 in.)
4446671AB	2.90mm (0.114 in.)

(53) Install input clutch assembly (Fig. 150).

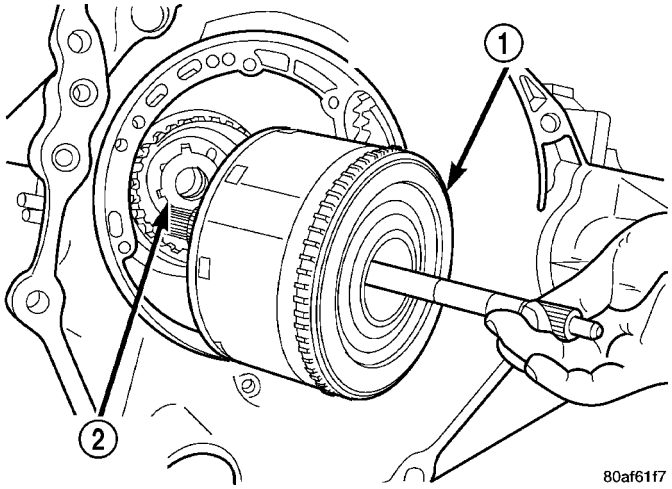

Fig. 150 Install Input Clutch Assembly

1 - INPUT CLUTCH ASSEMBLY
2 - #4 THRUST WASHER

(54) Install #1 caged needle bearing (Fig. 151).

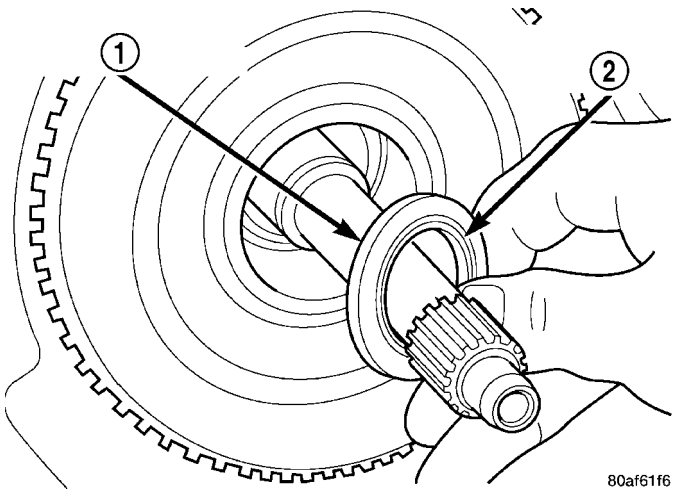

Fig. 151 Install Caged Needle Bearing

1 - #1 CAGED NEEDLE BEARING
2 - NOTE: TANGED SIDE OUT

CAUTION: The cooler bypass valve must be replaced if transaxle failure has occurred. Do not attempt to reuse or clean old valve.

(55) Install cooler bypass valve with o-ring end towards rear of case (Fig. 152).

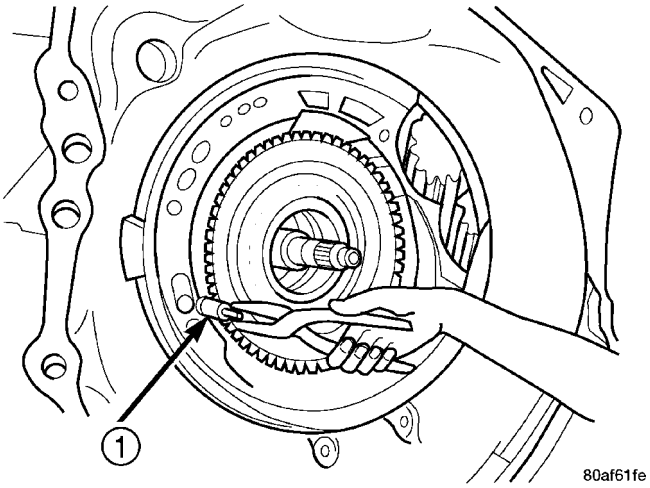

Fig. 152 Install Cooler Bypass Valve

1 - COOLER BYPASS VALVE

(56) Install oil pump gasket (Fig. 153).

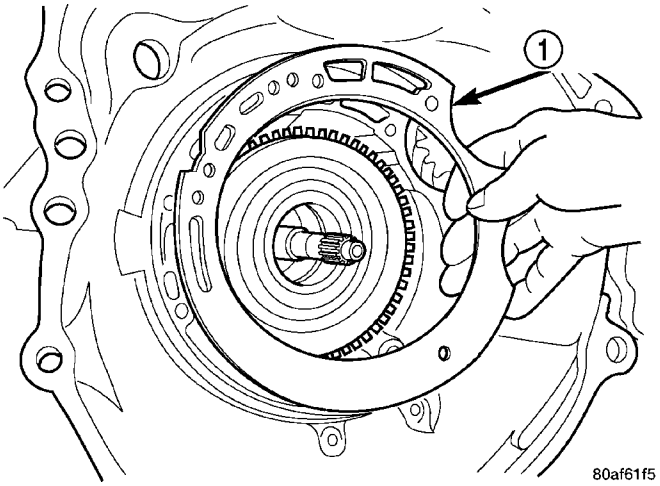

Fig. 153 Install Oil Pump Gasket

1 - PUMP GASKET

41TE AUTOMATIC TRANSAXLE (Continued)

(57) Install oil pump assembly (Fig. 154).

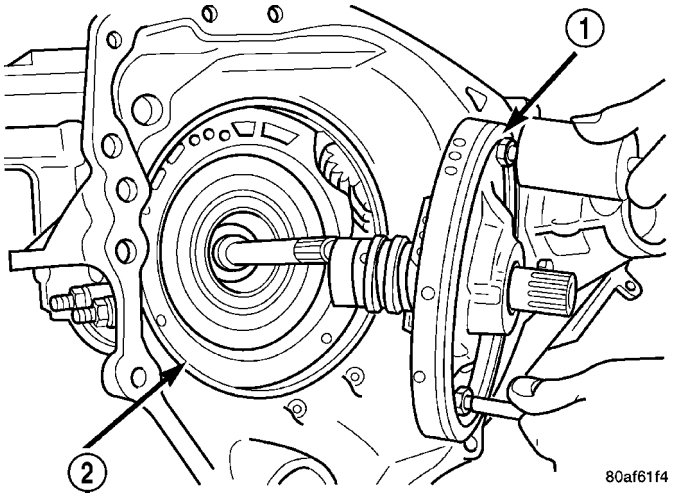

Fig. 154 Install Oil Pump

1 - OIL PUMP
2 - GASKET

(58) Install oil pump-to-case bolts and torque to 27 N·m (20 ft. lbs.) (Fig. 155).

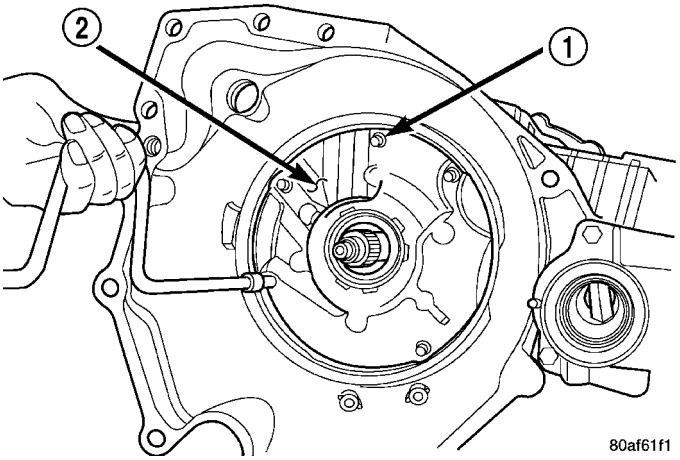

Fig. 155 Install Pump-to-Case Bolts

1 - PUMP ATTACHING BOLTS
2 - PUMP HOUSING

(59) Install low/reverse accumulator (Fig. 156).

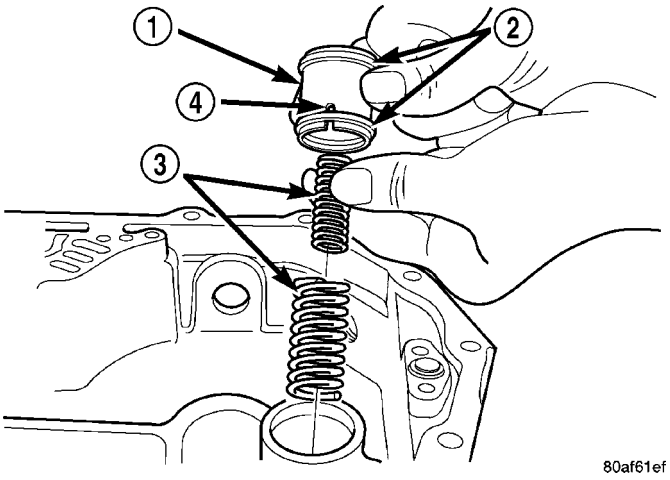

Fig. 156 Install Low/Reverse Accumulator

1 - ACCUMULATOR PISTON
2 - SEAL RINGS
3 - RETURN SPRINGS
4 - (NOTE NOTCH)

(60) Install low/reverse accumulator plug (Fig. 157).

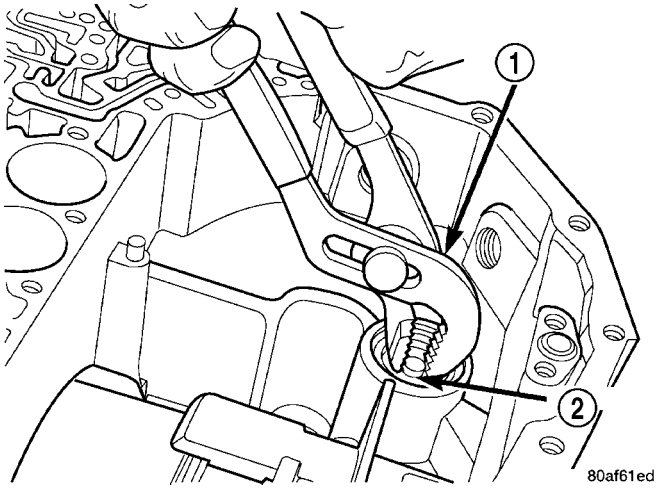

Fig. 157 Install Low/Reverse Accumulator Plug (Cover)

1 - ADJUSTABLE PLIERS
2 - PLUG

41TE AUTOMATIC TRANSAXLE (Continued)

(61) Install low/reverse accumulator snap ring (Fig. 158).

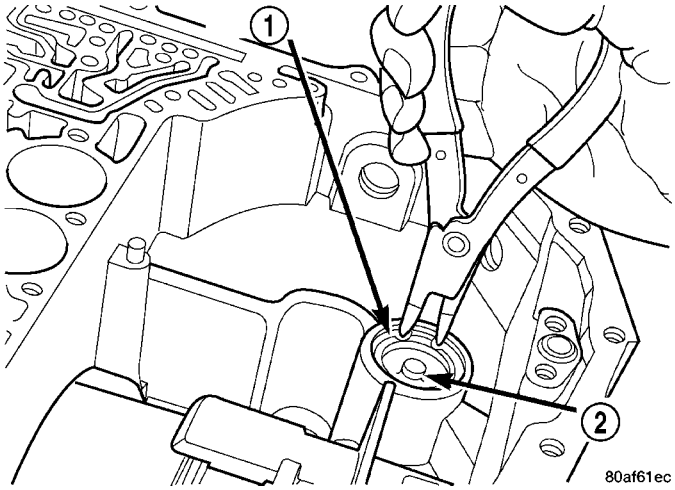

Fig. 158 Install Low/Reverse Accumulator Snap Ring

1 - SNAP RING
2 - PLUG

NOTE: Depending on engine application, some accumulators will have two springs, and others will have one spring. The springs are color-coded for application and year.

(62) Install underdrive and overdrive accumulators (Fig. 159) (Fig. 160) (Fig. 161).

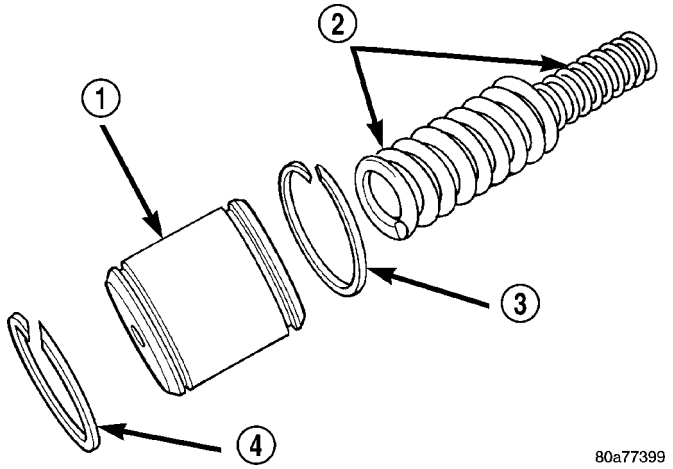

Fig. 159 Accumulator (Underdrive)

1 - ACCUMULATOR PISTON (UNDERDRIVE)
2 - RETURN SPRINGS
3 - SEAL RING
4 - SEAL RING

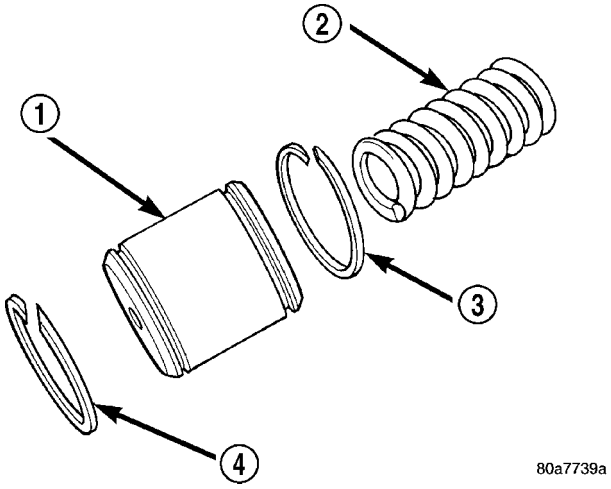

Fig. 160 Accumulator (Overdrive)

1 - ACCUMULATOR PISTON (OVERDRIVE)
2 - RETURN SPRING
3 - SEAL RING
4 - SEAL RING

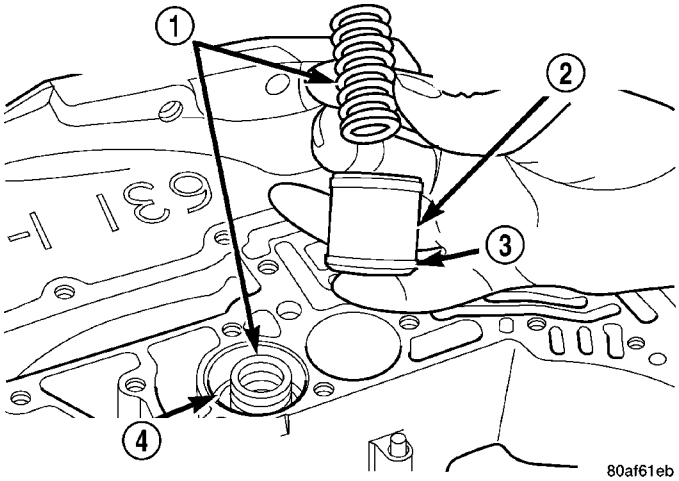

Fig. 161 Install Underdrive and Overdrive Accumulators

1 - RETURN SPRING
2 - UNDERDRIVE CLUTCH ACCUMULATOR
3 - SEAL RING (2)
4 - OVERDRIVE CLUTCH ACCUMULATOR

41TE AUTOMATIC TRANSAXLE (Continued)

(63) Install valve body to transaxle (Fig. 162). Rotate manual valve shaft fully clockwise to ease installation. Make sure park rod rollers are positioned within park guide bracket.

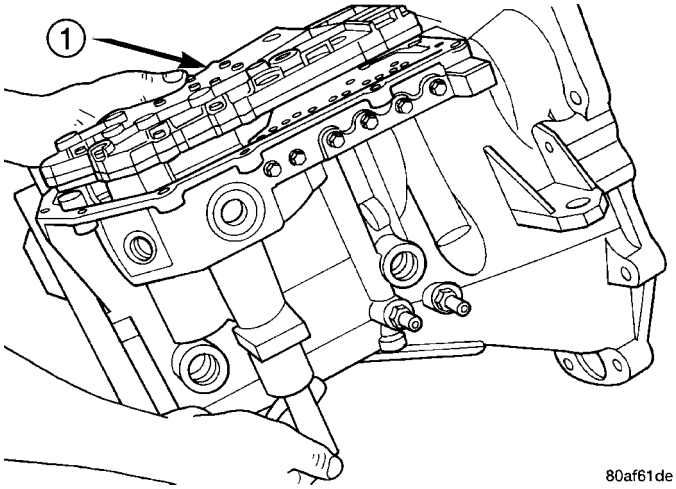

Fig. 162 Install Valve Body

1 - VALVE BODY

(64) Install and torque valve body-to-case bolts to 12 N·m (105 in. lbs.) (Fig. 163).

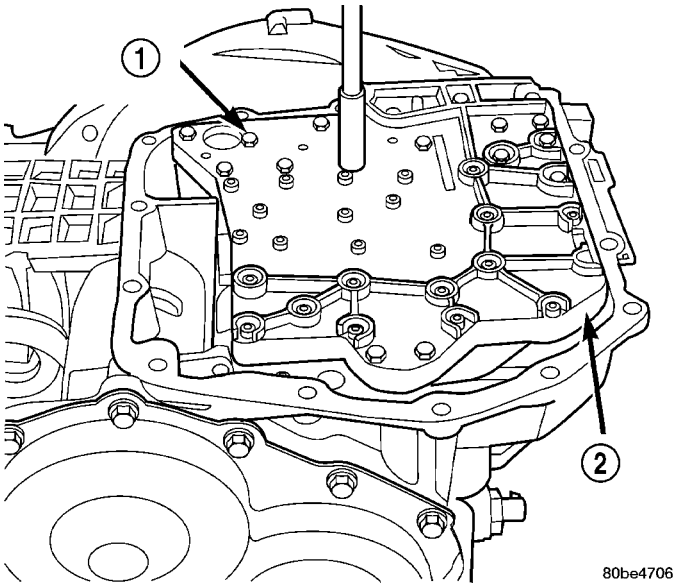

Fig. 163 Install Valve Body-to-Case Bolts

1 - VALVE BODY ATTACHING BOLTS (18)
2 - VALVE BODY

(65) Install oil filter and new o-ring (Fig. 164).

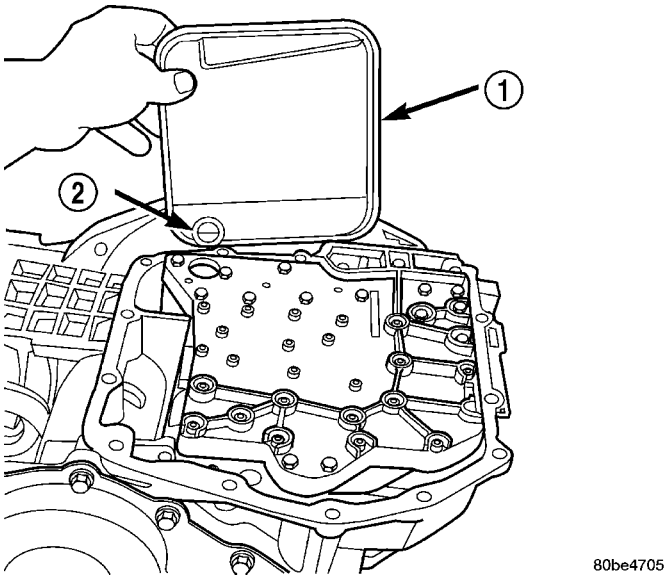

Fig. 164 Install Oil Filter

1 - OIL FILTER
2 - O-RING

(66) Apply an 1/8” bead of Mopar® ATF RTV (MS-GF41) to oil pan and immediately install to case (Fig. 165).

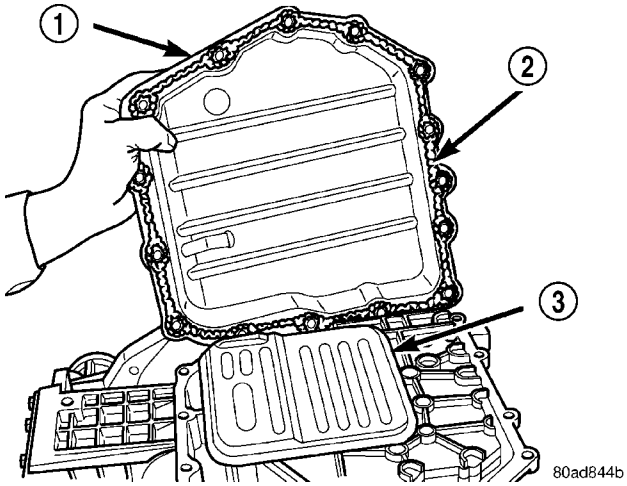

Fig. 165 Install Oil Pan

1 - OIL PAN
2 - 1/8 INCH BEAD OF MOPAR® ATF RTV (MS-GF41)
3 - OIL FILTER

41TE AUTOMATIC TRANSAXLE (Continued)

(67) Install oil pan-to-case bolts and torque to 19 N·m (165 in. lbs.).

(68) Install solenoid/pressure switch assembly and gasket to case (Fig. 166).

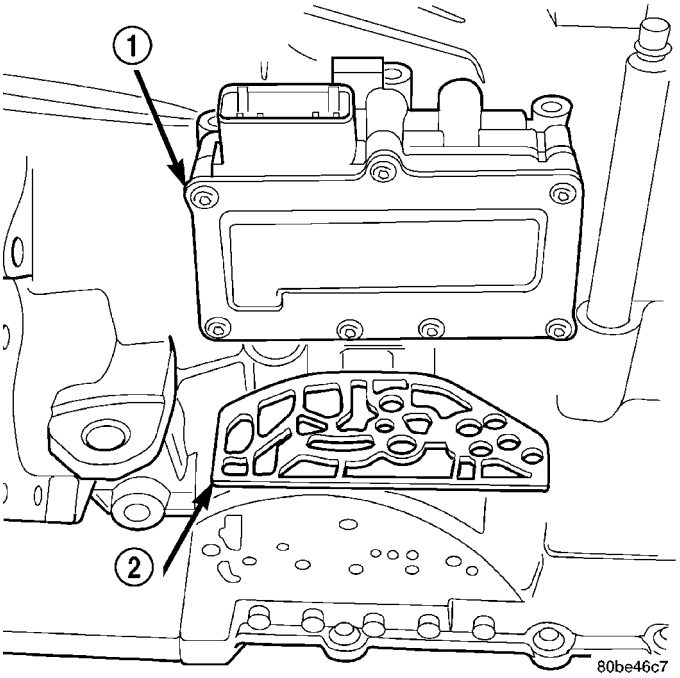

Fig. 166 Solenoid/Pressure Switch Assembly and Gasket

1 - SOLENOID/PRESSURE SWITCH ASSEMBLY
2 - GASKET

(69) Install and tighten solenoid/pressure switch assembly-to-transaxle case bolts to 12 N·m (110 in. lbs.) (Fig. 167).

(70) Install and torque input and output speed sensors to case to 27 N·m (20 ft. lbs.).

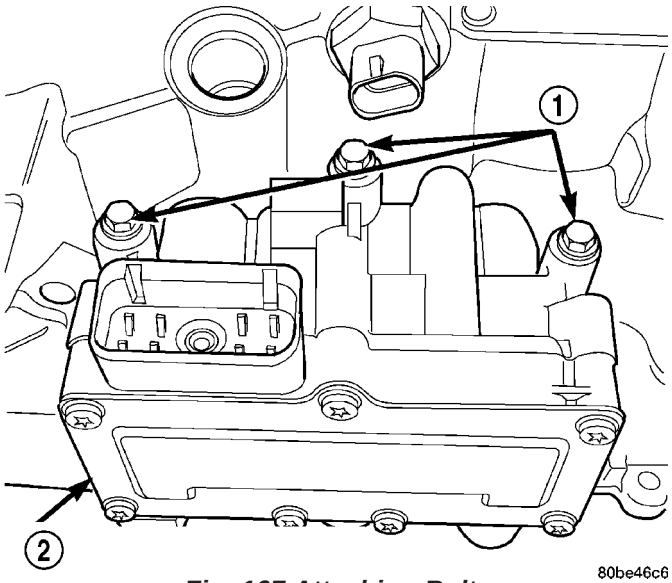

Fig. 167 Attaching Bolts

1 - BOLTS
2 - SOLENOID AND PRESSURE SWITCH ASSEMBLY

INSTALLATION

(1) 2Install transaxle to engine (Fig. 19) . Install and torque transaxle-to-engine bolts to 108 N·m (80 ft. lbs.).

(2) Raise engine/transaxle assembly enough line up transaxle mount bracket. Install two mount-to-transaxle bracket bolts (Fig. 18) and torque to 68 N·m (50 ft. lbs.).

(3) Remove screw jack support.

(4) Install four drive plate-to-torque converter bolts and torque to 88 N·m (65 ft. lbs.) torque.

(5) Position starter into place and hand-tighten lower bolt.

(6) Lower vehicle.

(7) Install transaxle dipstick tube. Verify that openings are free of debris and o-ring seal is intact. Replace o-ring if necessary. Secure bracket to transaxle. Install starter upper bolt through the ground cable and torque to (40 ft. lbs.).

(8) Install cable bracket-to-transaxle bellhousing bolt and torque to 61 N·m (45 ft. lbs.).

(9) Raise vehicle.

(10) Torque starter lower bolt (Fig. 17) to 54 N·m (40 ft. lbs.).

(11) Connect starter motor electrical connections.

(12) Install bellhousing dust cover (Fig. 15) .

(13) Install structural collar and left (front) lateral bending brace. Refer to ENGINE for proper procedures (Fig. 14) .

(14) Install right (rear) lateral bending brace (Fig. 16) . Torque bolts to 81 N·m (60 ft. lbs.) torque.

(15) Install power steering line to structural collar (Fig. 13) .

(16) Install front halfshafts. Refer to DIFFERENTIAL AND DRIVELINE for proper procedures and torque specifications.

(17) Install left splash shield.

(18) Install left wheel/tire assembly. Torque lug nuts to 136 N·m (100 ft. lbs.) torque.

(19) Lower vehicle.

(20) Connect cooler lines to transaxle and secure with constant-tension clamps.

(21) Connect solenoid/pressure switch assembly connector (Fig. 12) .

(22) Connect transmission range sensor connector (Fig. 12) .

(23) Connect output speed sensor connector (Fig. 12).

(24) Connect input speed sensor connector (Fig. 12).

(25) Install gearshift cable to bracket and connect to the manual valve lever.

(26) Install battery tray (Fig. 11) .

(27) Install battery and hold-down clamp (Fig. 10).

(28) Install air cleaner assembly (Fig. 9) .

(29) Connect battery cables.

(30) Fill transaxle with fluid. Refer to SERVICE PROCEDURES for proper procedure.

41TE AUTOMATIC TRANSAXLE (Continued)

SCHEMATICS AND DIAGRAMS

41TE TRANSAXLE HYDRAULIC SCHEMATICS

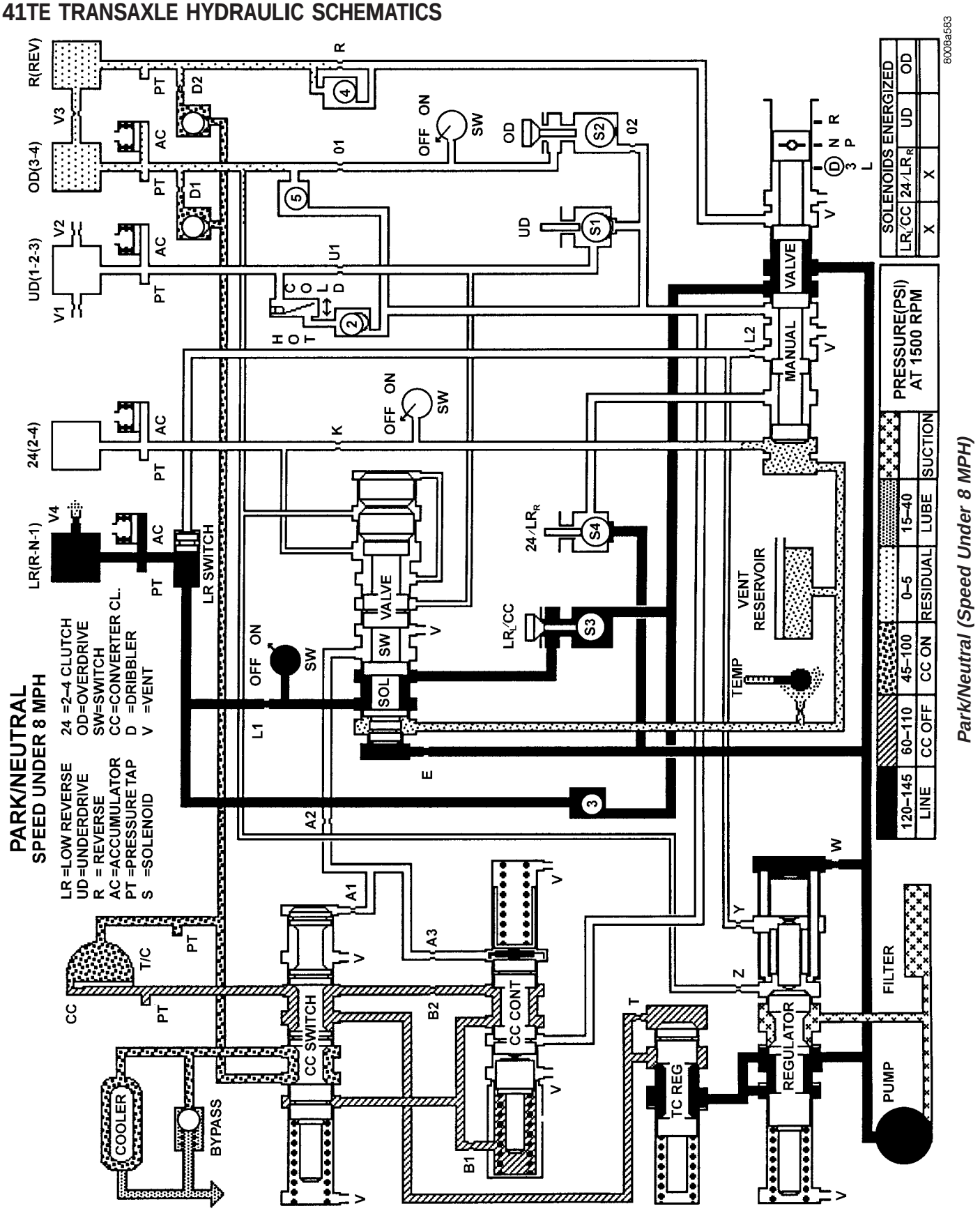

41TE AUTOMATIC TRANSAXLE (Continued)

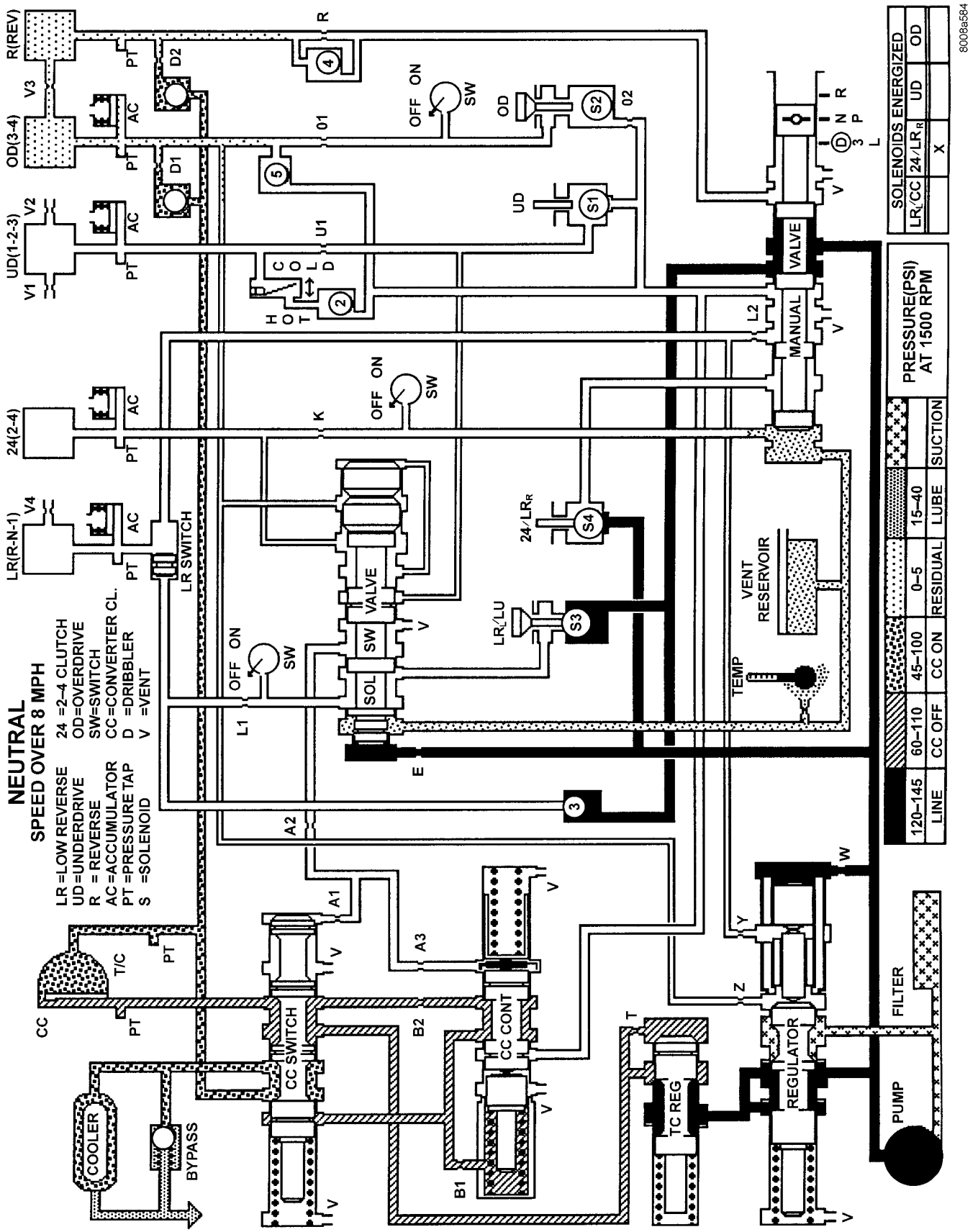

Neutral (Speed Over 8 MPH)

41TE AUTOMATIC TRANSAXLE (Continued)

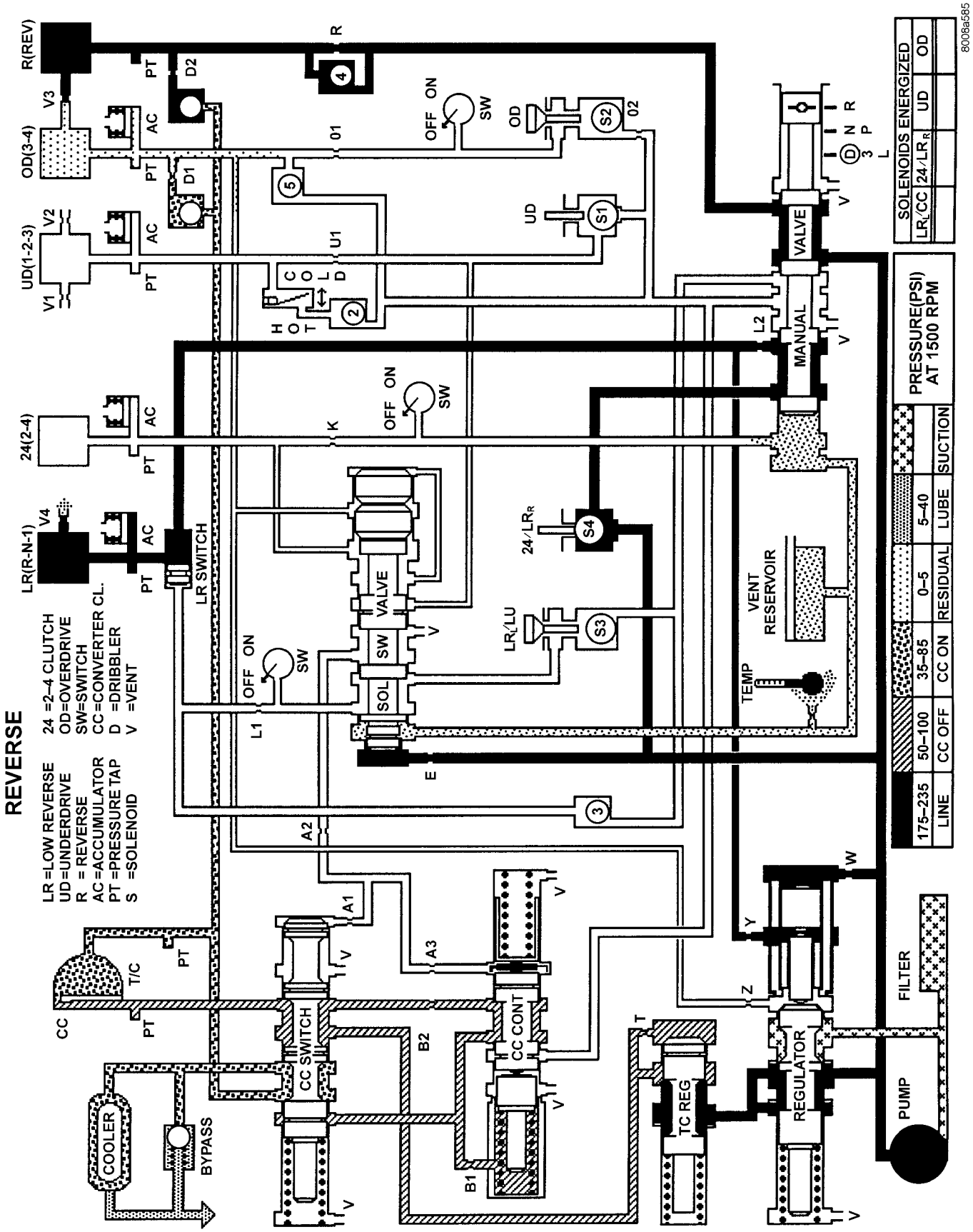

Reverse

41TE AUTOMATIC TRANSAXLE (Continued)

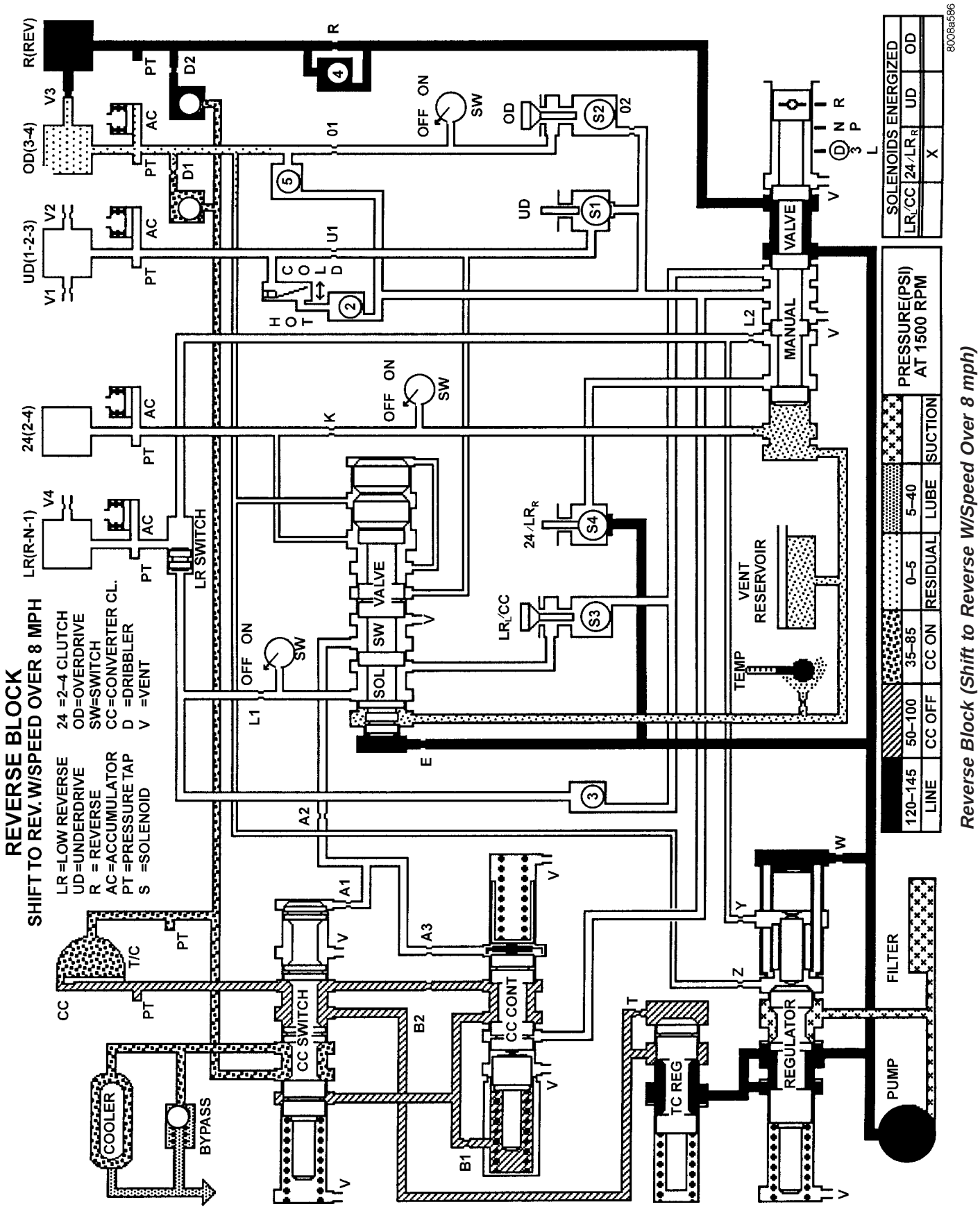

Reverse Block (Shift to Reverse W/Speed Over 8 mph)

41TE AUTOMATIC TRANSAXLE (Continued)

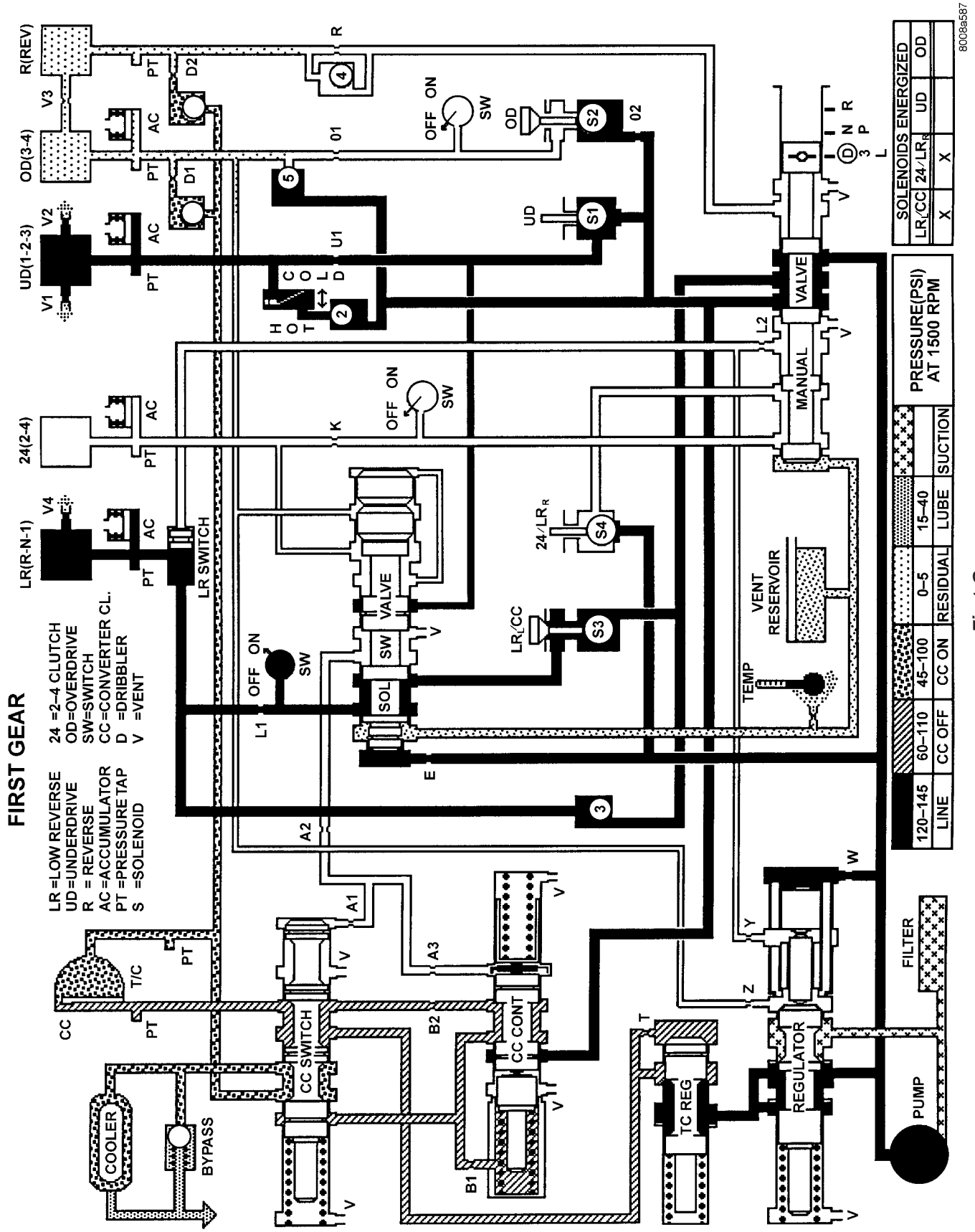

First Gear

41TE AUTOMATIC TRANSAXLE (Continued)

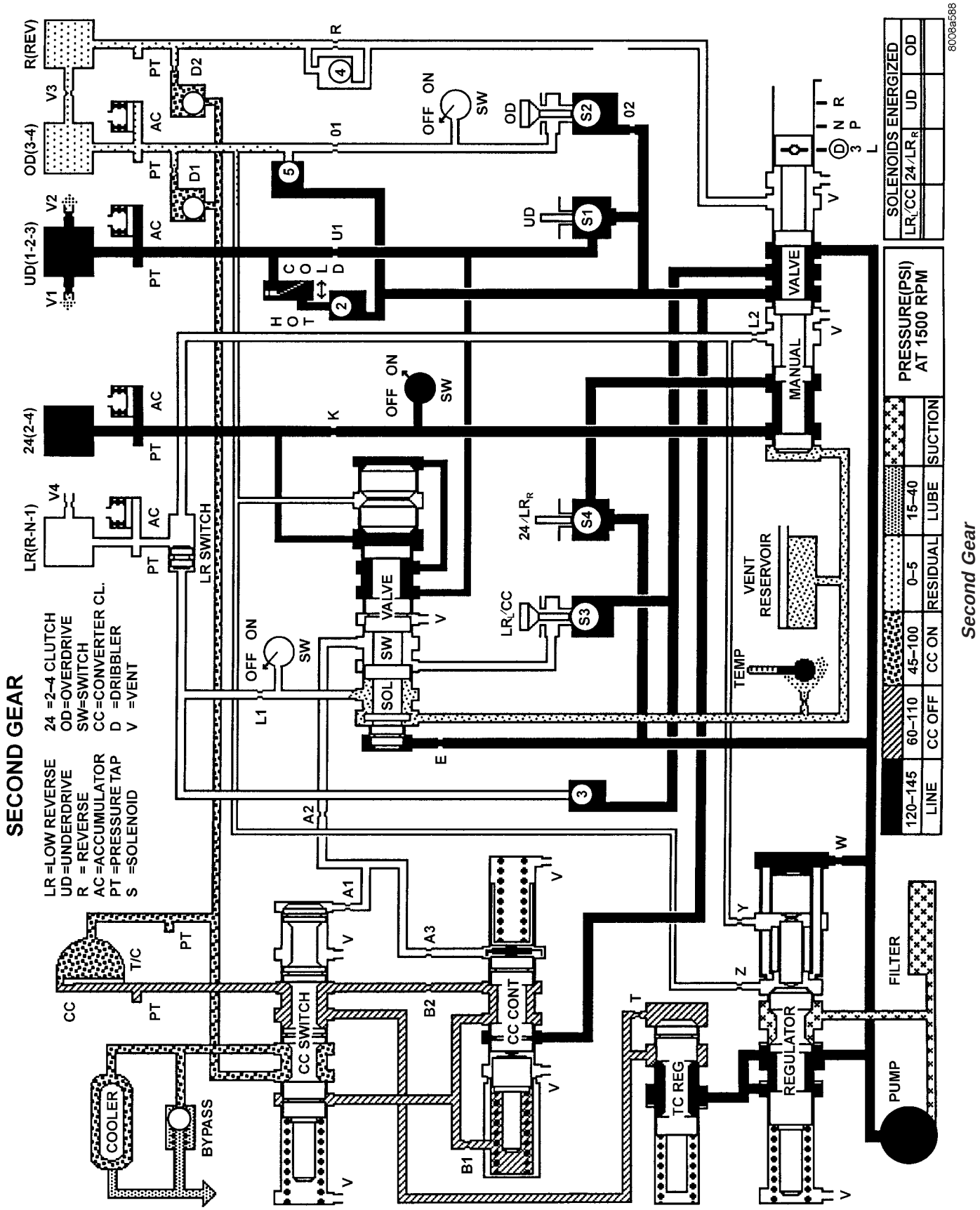

41TE AUTOMATIC TRANSAXLE (Continued)

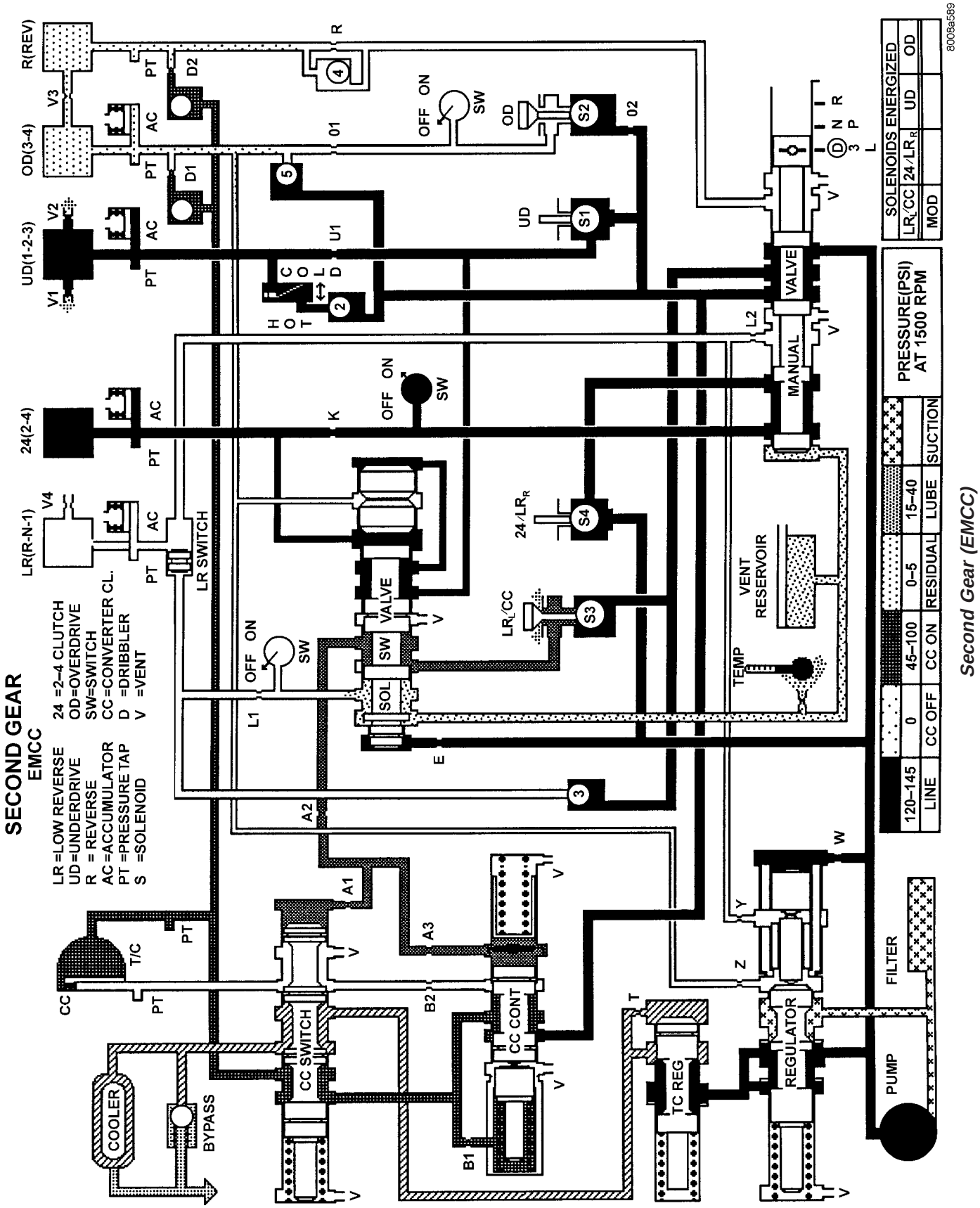

Second Gear (EMCC)

41TE AUTOMATIC TRANSAXLE (Continued)

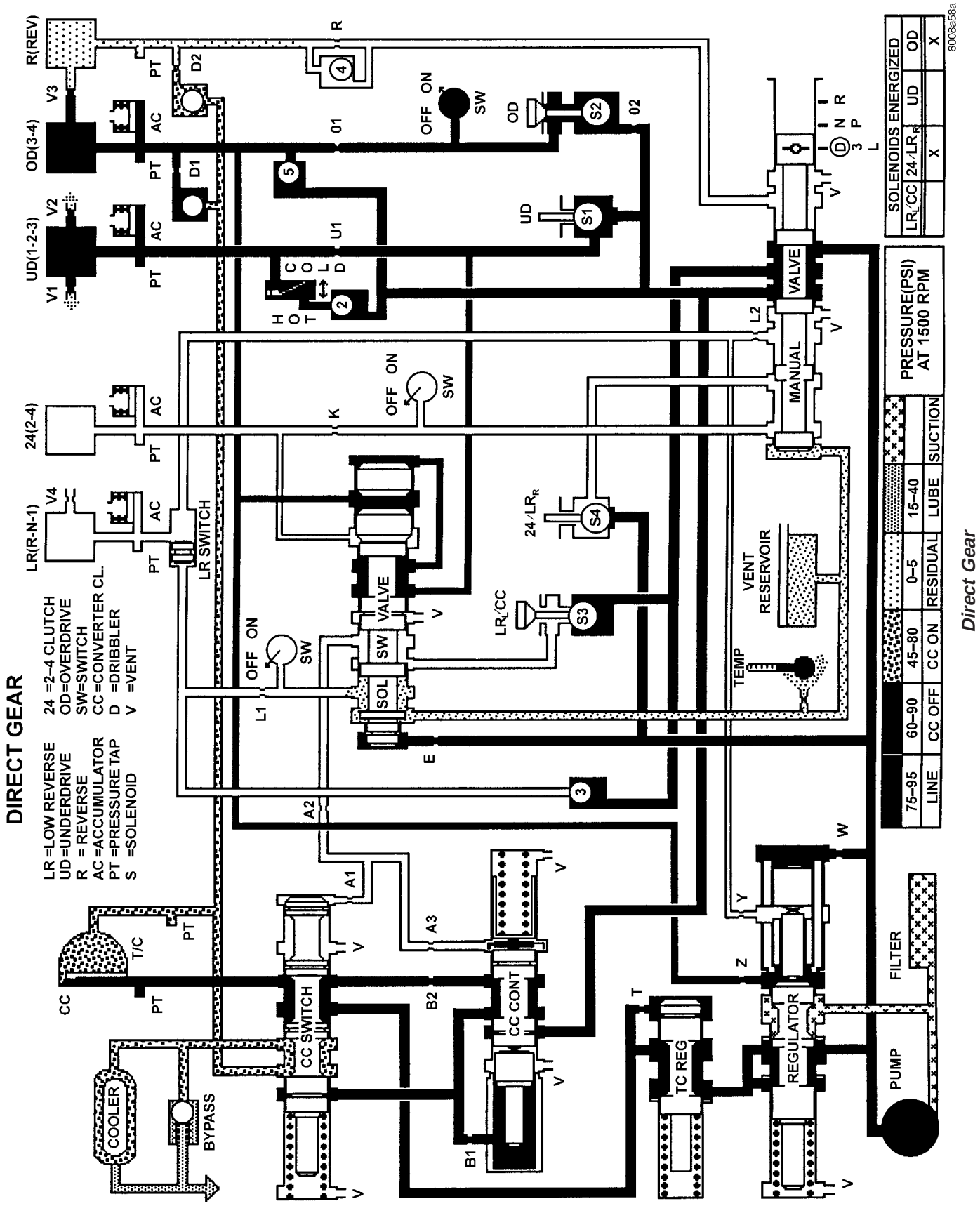

Direct Gear

41TE AUTOMATIC TRANSAXLE (Continued)

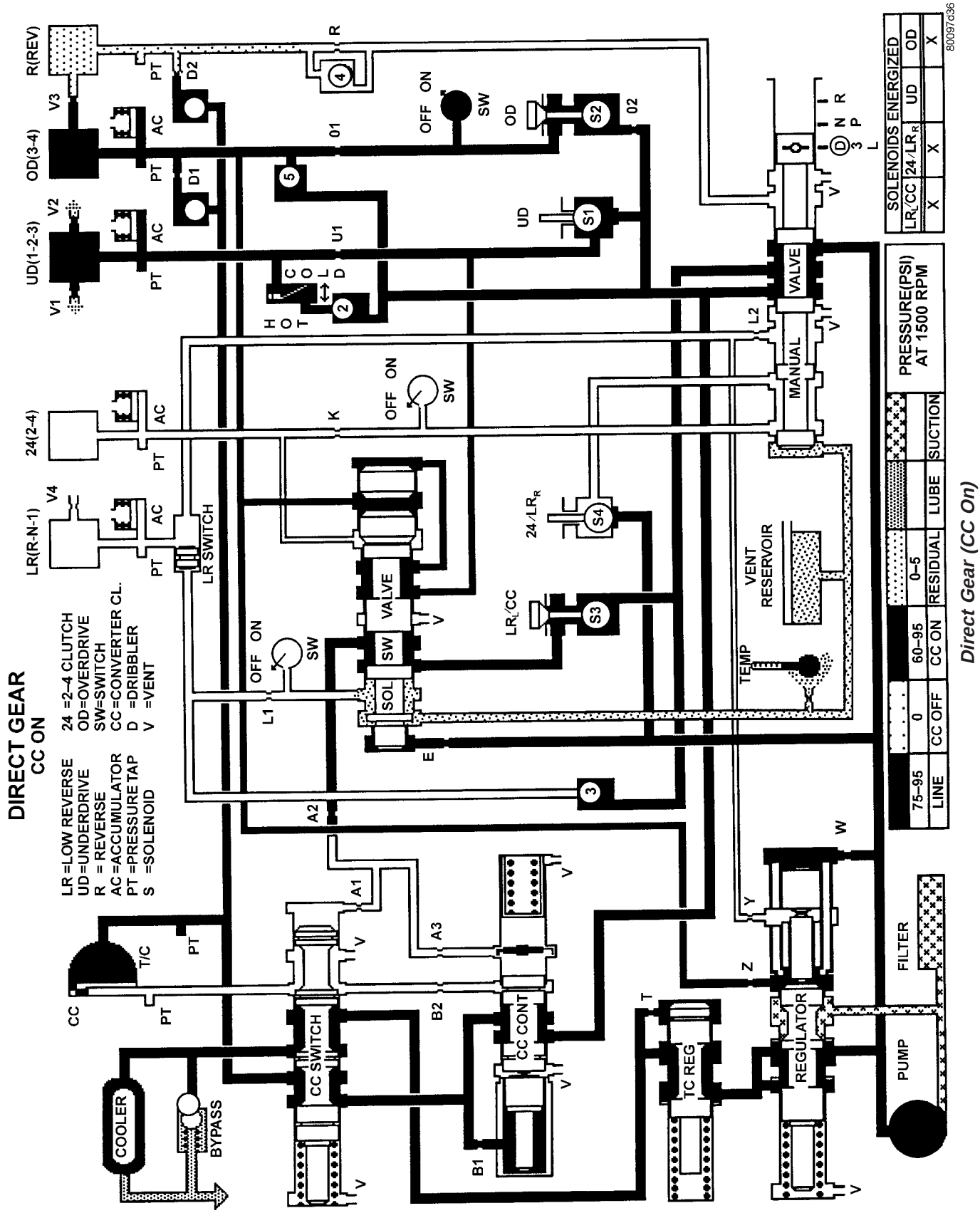

41TE AUTOMATIC TRANSAXLE (Continued)

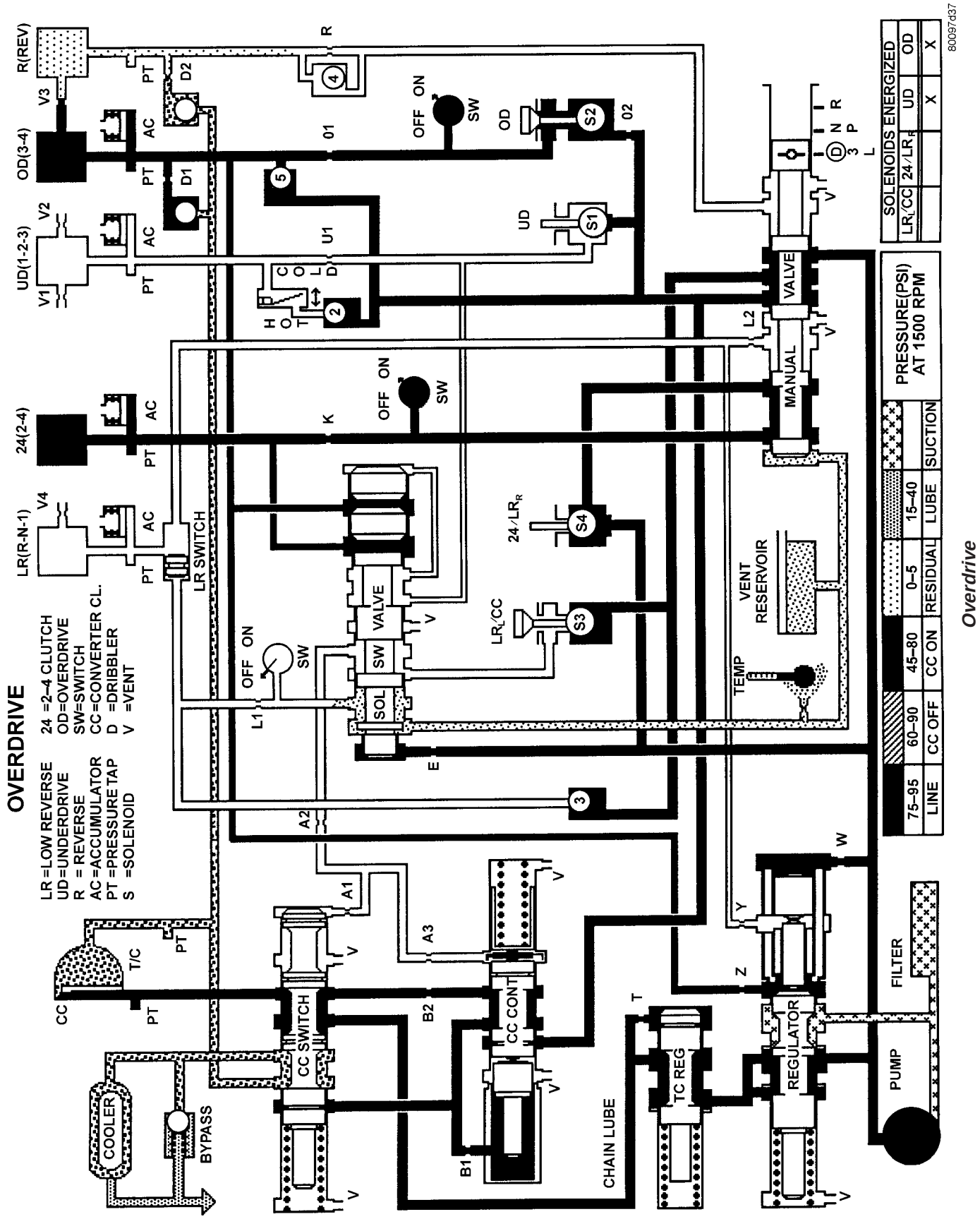

Overdrive

41TE AUTOMATIC TRANSAXLE (Continued)

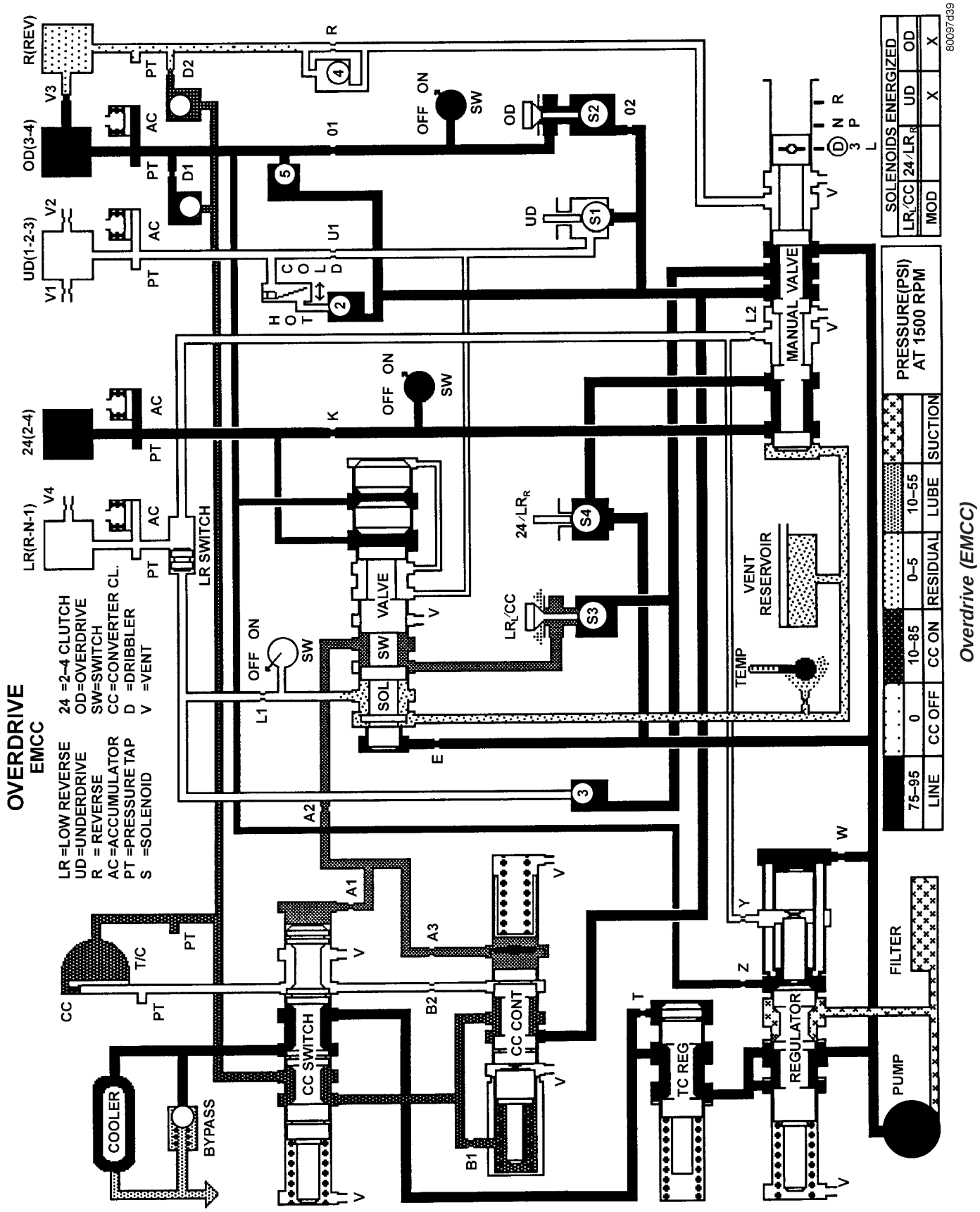

Overdrive (EMCC)

41TE AUTOMATIC TRANSAXLE (Continued)

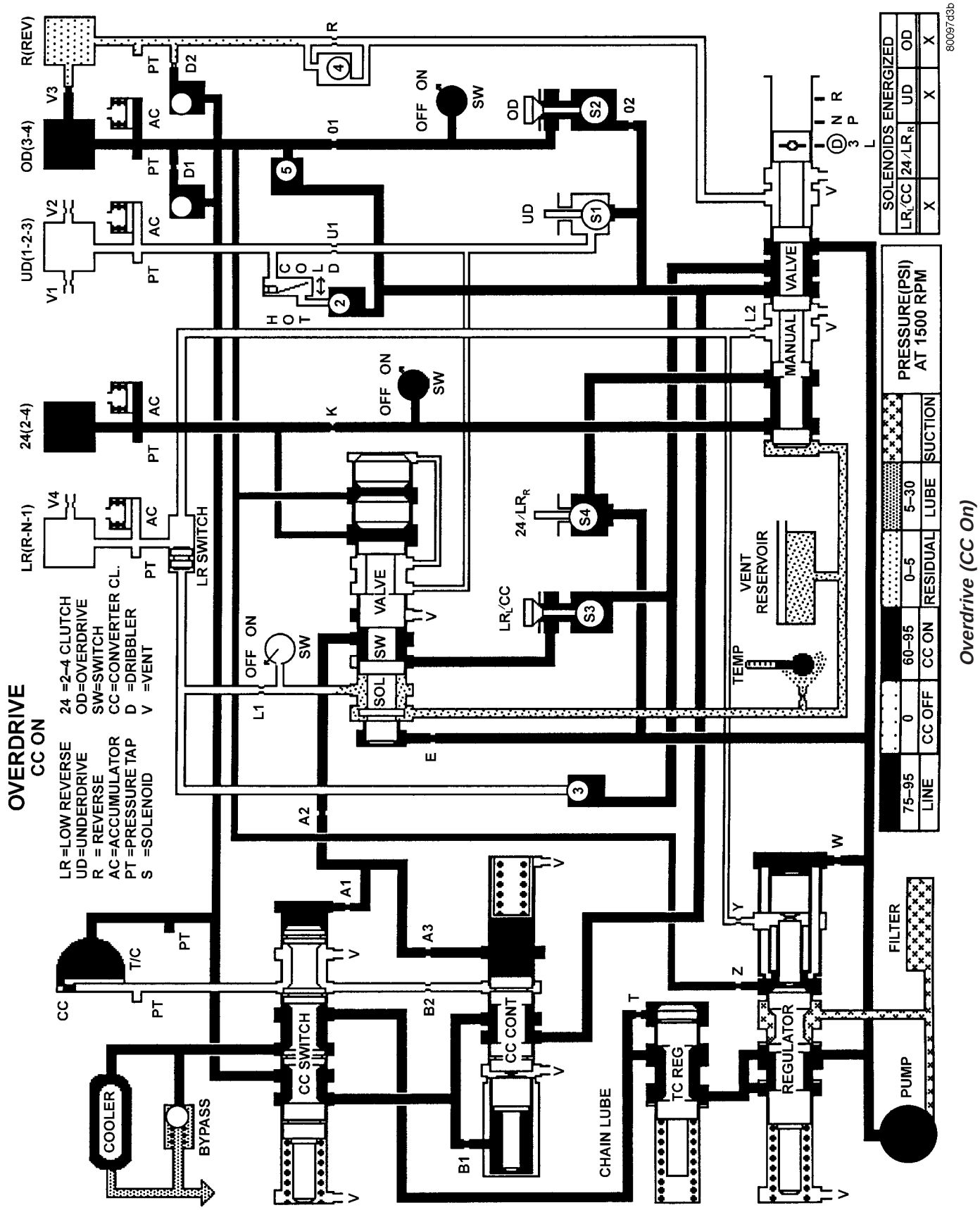

41TE AUTOMATIC TRANSAXLE (Continued)

SPECIFICATIONS

GENERAL SPECIFICATIONS

DESCRIPTION	SPECIFICATION
Transaxle Type	Fully adaptive, electronically controlled, four speed automatic with torque converter and integral differential
Cooling Method	Oil-to-Water Heat Exhanger
Lubrication	Pump (internal-external gear-type

GEAR RATIOS

DESCRIPTION	SPECIFICATION
First Gear	2.84
Second Gear	1.57
Direct Gear	1.00
Overdrive Gear	0.69
Reverse Gear	2.21

BEARING SETTINGS (END PLAY & TURNING TORQUE)

DESCRIPTION	METRIC	STANDARD
Differential Assembly	0.6-2 N·m	5-18 in. lbs.
Output Hub	0.3-2 N·m	3-8 in. lbs.
Transfer Shaft (End Play)	0.051-0.102 mm	0.002-0.004 in.
Overall Drag At Output Hub	0.3-1.9 N·m	3-16 in. lbs.

CLUTCH CLEARANCES

DESCRIPTION	METRIC	STANDARD
Low/Rev Clutch (Select Reaction Plate)	0.89-1.47 mm	0.035-0.058 in.
Two/Four Clutch (No Selection)	0.76-2.64 mm	0.030-0.104 in.
Reverse Clutch (Select Snap Ring)	0.89-1.37 mm	0.035-0.054 in.
Overdrive Clutch (No Selection)	1.07-3.25 mm	0.042-0.128 in.
Underdrive Clutch (Select Reaction Plate)	0.94-1.50 mm	0.037-0.059 in.

OIL PUMP CLEARANCES

DESCRIPTION	METRIC	STANDARD
Outer Gear-to-Crescent	0.060-0.298 mm	0.0023-0.0117 in.
Inner Gear-to-Crescent	0.093-0.385 mm	0.0036-0.0151 in.
Outer Gear-to-Pocket	0.089-0.202 mm	0.0035-0.0079 in.
Outer Gear Side Clearance	0.020-0.046 mm	0.0008-0.0018 in.
Inner Gear Side Clearance	0.020-0.046 mm	0.0008-0.0018 in.

41TE AUTOMATIC TRANSAXLE (Continued)

INPUT SHAFT

DESCRIPTION	METRIC	SPECIFICATION
End Play	0.127-0.635mm	0.005-0.025 in.

TORQUE SPECIFICATIONS

DESCRIPTION	N·m	Ft. Lbs.	In. Lbs.
Bolt, Differential Cover-to-Case	19	—	165
Bolt, Differential Ring Gear-to-Case	95	70	—
Bolt, Differential Bearing Retainer-to-Case	28	21	—
Bolt, Driveplate-to-Crankshaft	95	70	—
Bolt, Extension Housing/ Plate-to-Case	28	21	—
Bolt, Oil Pan-to-Case	19	—	165
Bolt, Output Gear	271	200	—
Bolt, Output Gear Stirrup/Strap	23	17	—
Bolt, Oil Pump-to-Case	27	20	—
Bolt, Reaction Support-to-Case	27	20	—
Bolt, Solenoid/Pressure Switch Assy.-to-Case	12	—	110
Bolt, Torque Converter-to-Driveplate	75	55	—
Bolt, Transfer Gear Cover	20	—	175
Bolt, Valve Body-to-Case	12	—	105
Fitting, Oil Cooler Line	12	—	105
Nut, Tranfer Gear	271	200	—
Tap, Transaxle Pressure	5	—	45
Screw, L/R Clutch Retainer	5	—	45
Screw, Solenoid/Pressure Switch Assy. Connector	4	—	35
Screw, Valve Body-to-Transfer Plate	5	—	45
Sensor, Input Speed	27	20	—
Sensor, Output Speed	27	20	—
Sensor, Transmission Range Sensor	5	—	45

41TE AUTOMATIC TRANSAXLE (Continued)

SPECIAL TOOLS

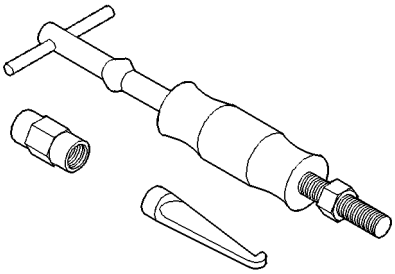

Puller C-637

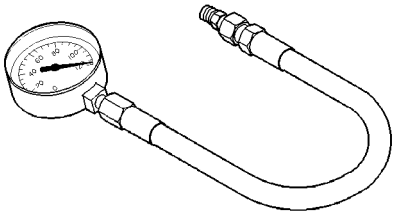

Pressure Gauge (High) C-3293SP

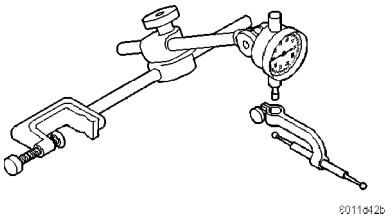

Dial Indicator C-3339

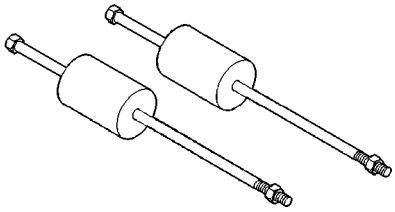

Oil Pump Puller C-3752

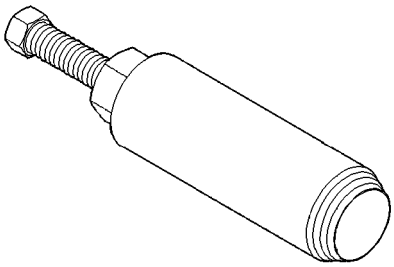

Seal Puller C-3981B

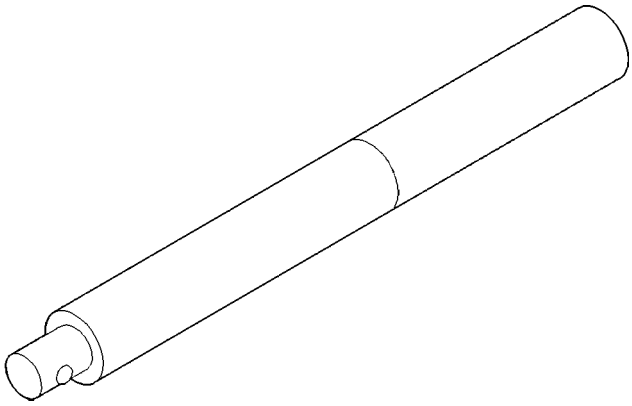

Universal Handle C-4171

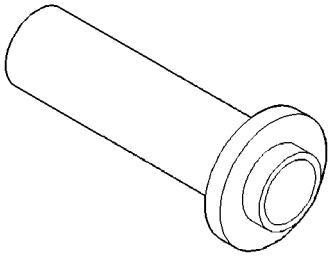

Seal Installer C-4193A

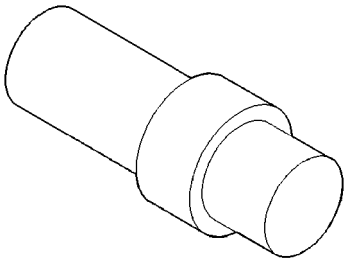

Adapter C-4996

41TE AUTOMATIC TRANSAXLE (Continued)

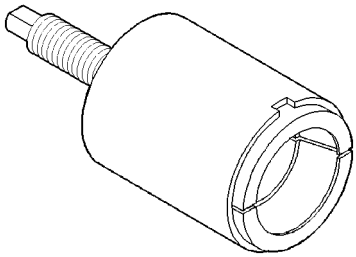

Remover Kit L-4406

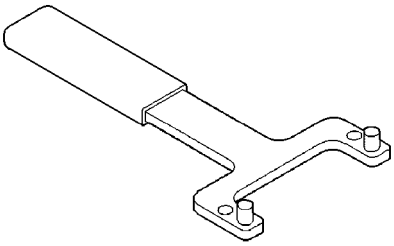

Bearing Puller L-4435

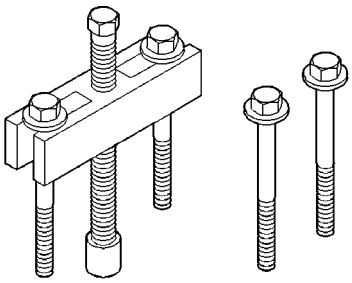

Gear Puller L-4407A

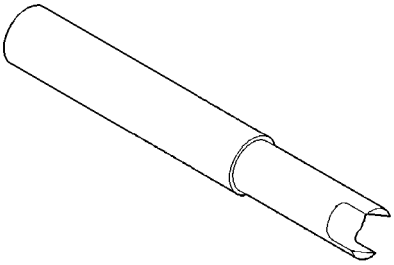

Differential Tool L-4436A

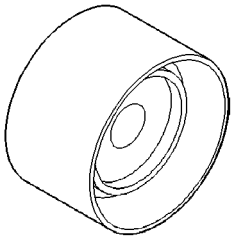

Bearing Installer L-4410

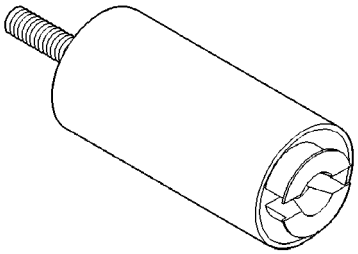

Special Jaw Set L-4518

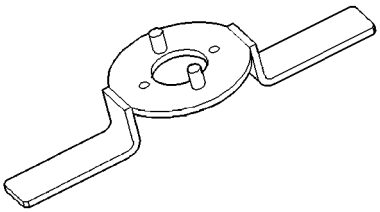

Gear Checking Plate L-4432

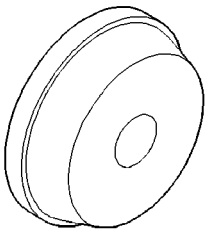

Installer L-4520

41TE AUTOMATIC TRANSAXLE (Continued)

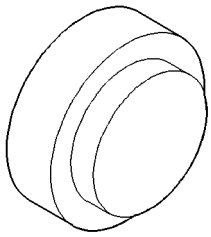

Thrust Button L-4539-2

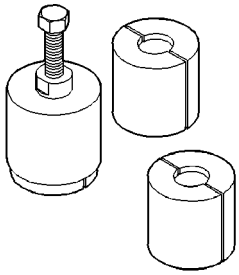

Puller Set 5048

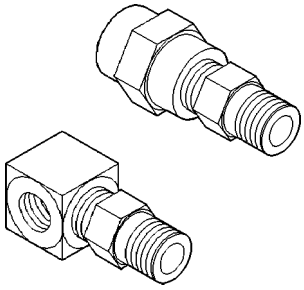

Adapter L-4559

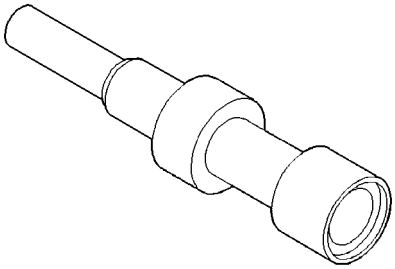

Remover/Installer 5049-A

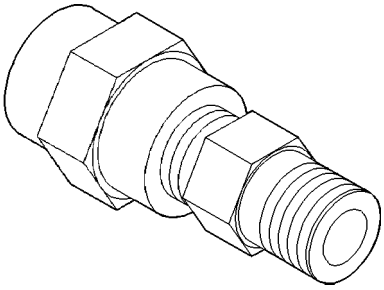

Adapter L-4559-2

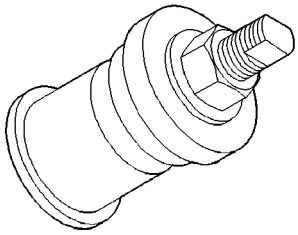

Installer 5050A

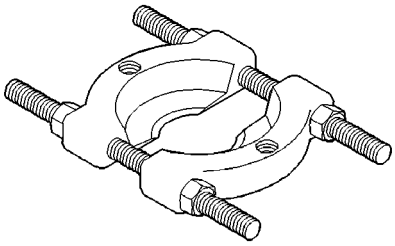

Bearing Splitter P-334

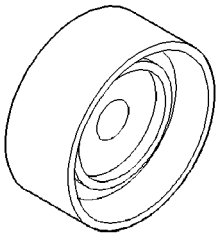

Installer 5052

41TE AUTOMATIC TRANSAXLE (Continued)

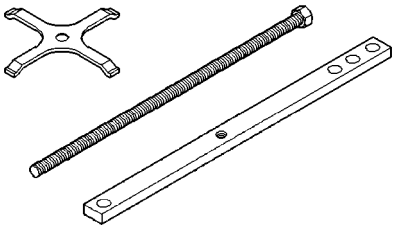

Compressor 5058A

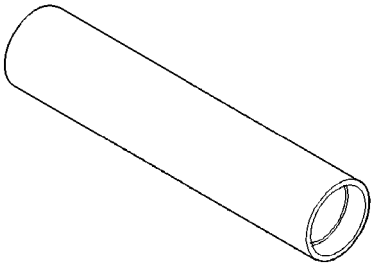

Installer 6052

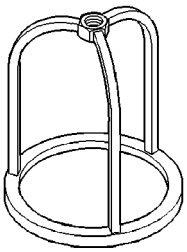

Compressor 5059-A

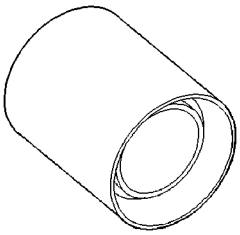

Installer 6053

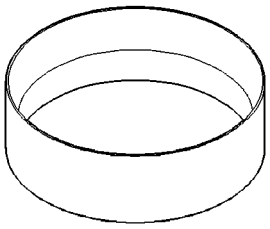

Installer 5067

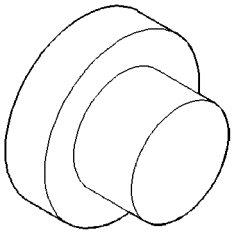

Button 6055

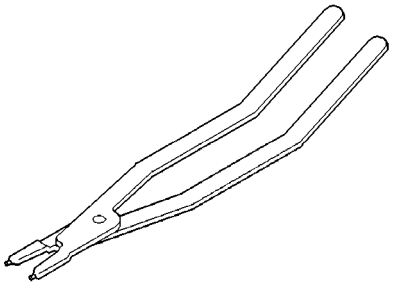

Pliers 6051

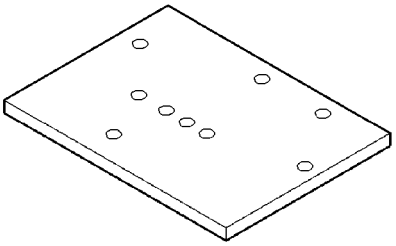

Plate 6056

41TE AUTOMATIC TRANSAXLE (Continued)

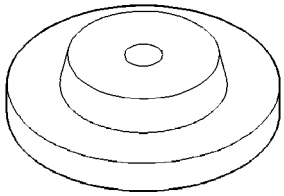

Disk 6057

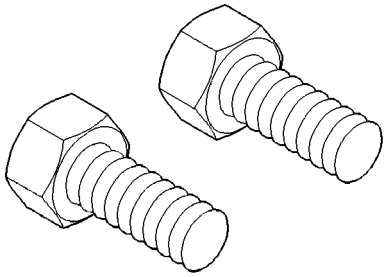

Bolt 6260

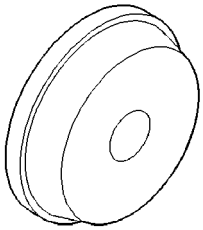

Installer 6061

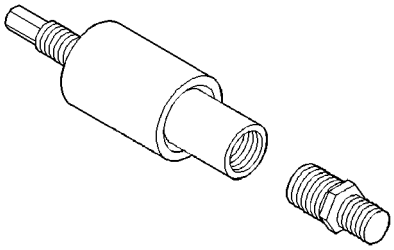

Installer 6261

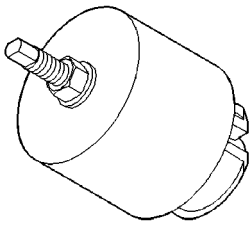

Remover 6062-A

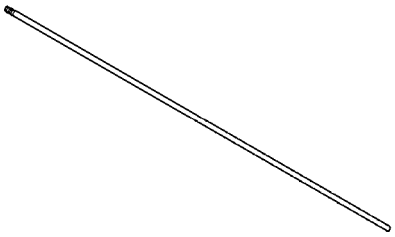

Tip 6268

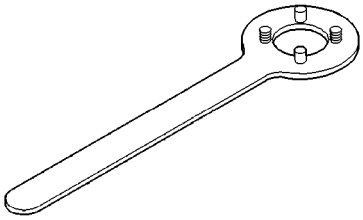

Holder 6259

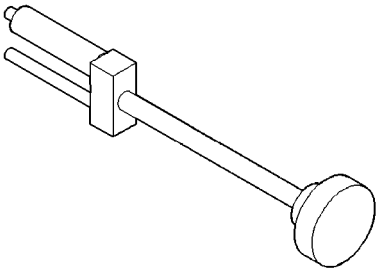

Remover/Installer 6301

41TE AUTOMATIC TRANSAXLE (Continued)

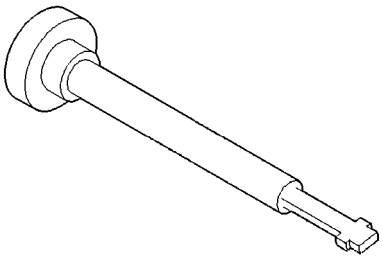

Remover/Installer 6302

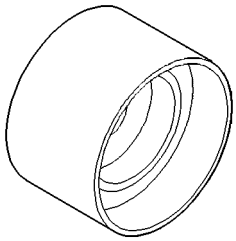

Installer 6536-A

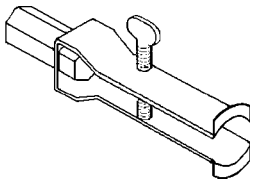

Puller 7794-A

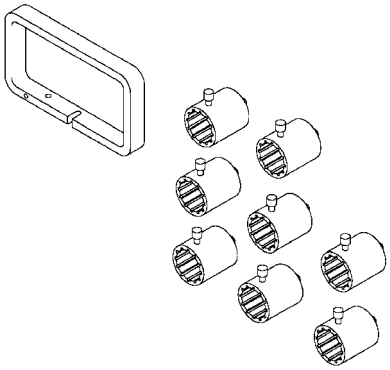

End Play Socket Set 8266

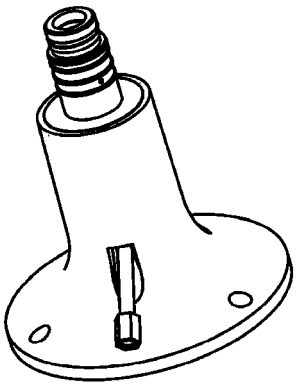

Input Clutch Pressure Fixture 8391

ACCUMULATOR

DESCRIPTION

The 41te underdrive, overdrive, low/reverse, and 2/4 clutch hydraulic circuits each contain an accumulator. An accumulator typically consists of a piston, seals, return spring(s), and a cover or plug. The overdrive and underdrive accumulators are located within the transaxle case, and are retained by the valve body (Fig. 168) .

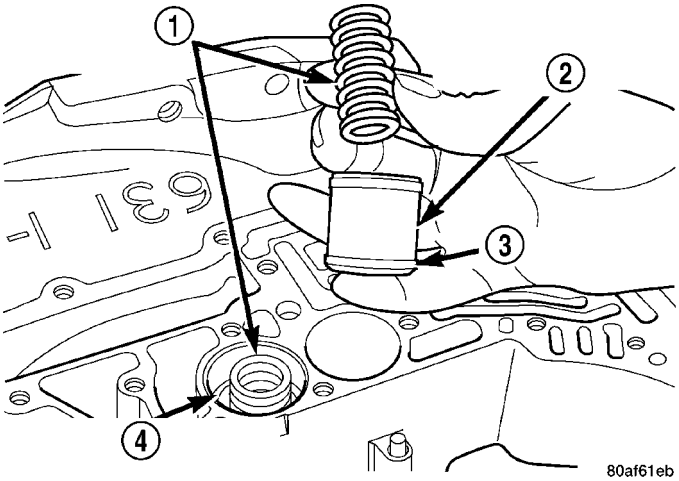

Fig. 168 Underdrive and Overdrive Accumulators

1 - RETURN SPRING
2 - UNDERDRIVE CLUTCH ACCUMULATOR
3 - SEAL RING (2)
4 - OVERDRIVE CLUTCH ACCUMULATOR

The low reverse accumulator (Fig. 169) is also located within the transaxle case, but the assembly is retained by a cover and a snap-ring.

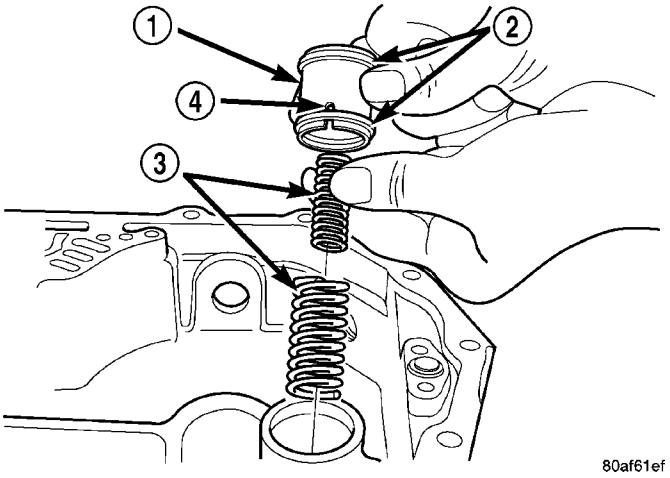

Fig. 169 Low/Reverse Accumulator Assembly

1 - ACCUMULATOR PISTON
2 - SEAL RINGS
3 - RETURN SPRINGS
4 - (NOTE NOTCH)

The 2/4 accumulator is located in the valve body. It is retained by a cover and retaining screws (Fig. 170) .

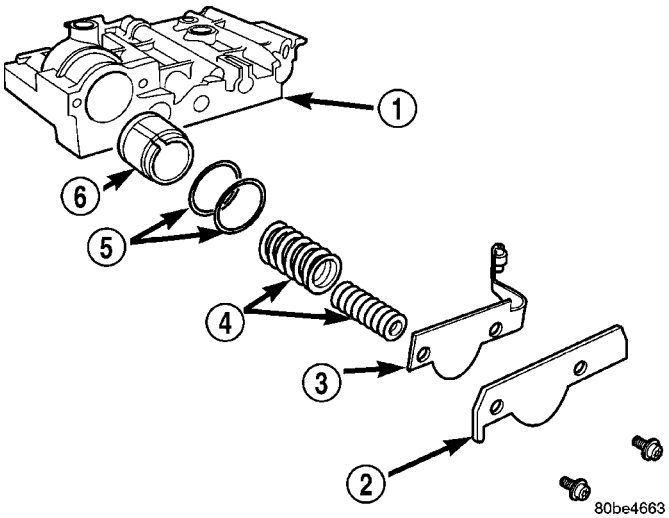

Fig. 170 2/4 Accumulator Assembly

1 - VALVE BODY
2 - RETAINER PLATE
3 - DETENT SPRING
4 - SPRINGS
5 - SEALS
6 - PISTON

OPERATION

The function of an accumulator is to cushion the application of a frictional clutch element. When pressurized fluid is applied to a clutch circuit, the application force is dampened by fluid collecting in the respective accumulator chamber against the piston and spring(s). The intended result is a smooth, firm clutch application.

DRIVING CLUTCHES

DESCRIPTION

Three hydraulically applied input clutches are used to drive planetary components. The underdrive, overdrive, and reverse clutches are considered input clutches and are contained within the input clutch assembly (Fig. 171). The input clutch assembly also contains:

- Input shaft
- Input hub
- Clutch retainer
- Underdrive piston
- Overdrive/reverse piston
- Overdrive hub
- Underdrive hub

DRIVING CLUTCHES (Continued)

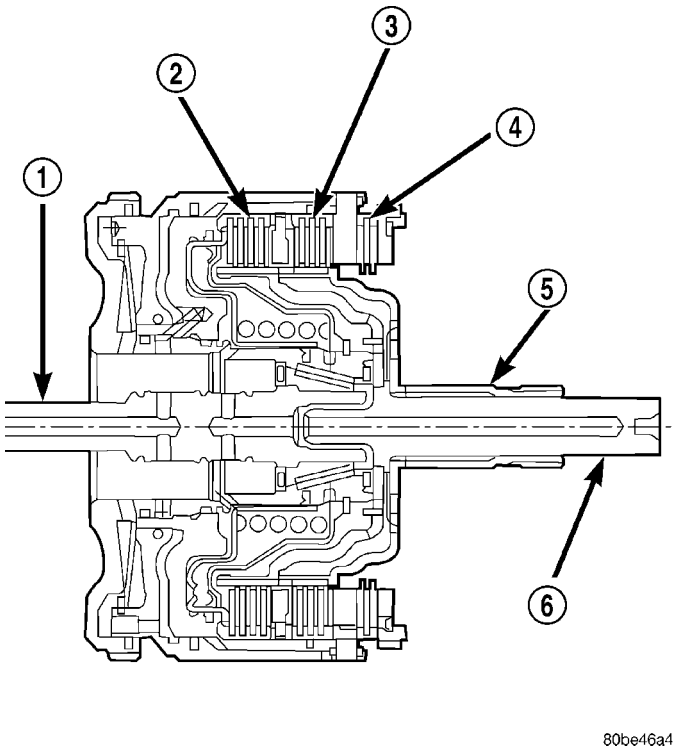

Fig. 171 Input Clutch Assembly

1 - INPUT SHAFT
2 - UNDERDRIVE CLUTCH
3 - OVERDRIVE CLUTCH
4 - REVERSE CLUTCH
5 - OVERDRIVE SHAFT
6 - UNDERDRIVE SHAFT

OPERATION

The three input clutches are responsible for driving different components of the planetary geartrain.

NOTE: Refer to the "Elements In Use" chart in Diagnosis and Testing for a collective view of which clutch elements are applied at each position of the selector lever.

UNDERDRIVE CLUTCH

The underdrive clutch is hydraulically applied in first, second, and third (direct) gears by pressurized fluid against the underdrive piston. When the underdrive clutch is applied, the underdrive hub drives the rear sun gear.

OVERDRIVE CLUTCH

The overdrive clutch is hydraulically applied in third (direct) and overdrive gears by pressurized fluid against the overdrive/reverse piston. When the overdrive clutch is applied, the overdrive hub drives the front planet carrier.

REVERSE CLUTCH

The reverse clutch is hydraulically applied in reverse gear only by pressurized fluid against the overdrive/reverse piston. When the reverse clutch is applied, the front sun gear assembly is driven.

FINAL DRIVE

DESCRIPTION

The 41TE differential is a conventional open design. It consists of a ring gear and a differential case. The differential case consists of pinion and side gears, and a pinion shaft. The differential case is supported in the transaxle by tapered roller bearings (Fig. 172) .

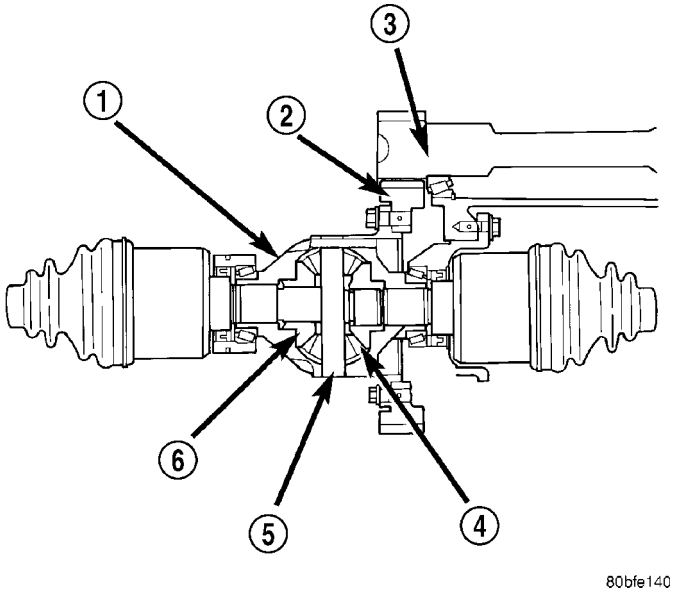

Fig. 172 Differential Assembly

1 - DIFFERENTIAL CASE
2 - RING GEAR
3 - TRANSFER SHAFT
4 - PINION GEAR
5 - PINION SHAFT
6 - SIDE GEAR

OPERATION

The differential assembly is driven by the transfer shaft by way of the differential ring gear. The ring gear drives the differential case, and the case drives the driveshafts through the differential gears. The differential pinion and side gears are supported in the case by thrust washers and a pinion shaft. Differential pinion and side gears make it possible for front tires to rotate at different speeds while cornering.

FINAL DRIVE (Continued)

DISASSEMBLY

NOTE: The differential is serviced as an assembly. The only parts that are serviceable within the differential are the differential bearing cups and cones. If any other part fails within the differential, you must replace the differential assembly along with the transfer shaft.

The transfer shaft should be removed for differential repair and bearing turning torque checking.

(1) Remove the differential cover and bolts (Fig. 173) (Fig. 174).

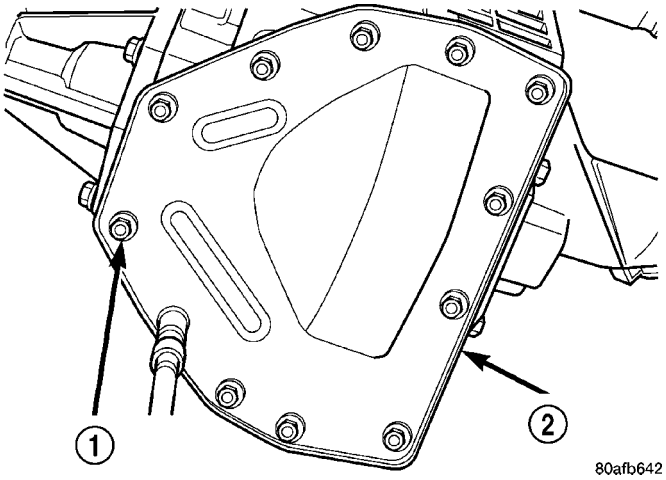

Fig. 173 Differential Cover Bolts

1 - DIFFERENTIAL COVER BOLTS
2 - DIFFERENTIAL COVER

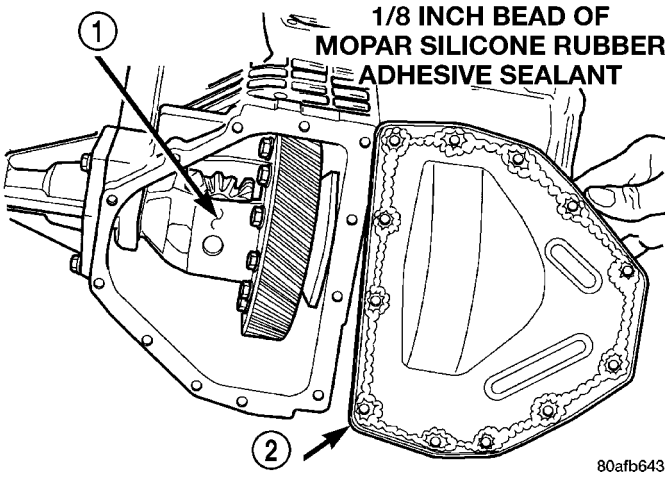

Fig. 174 Remove Differential Cover

1 - DIFFERENTIAL ASSEMBLY
2 - DIFFERENTIAL COVER

(2) Remove the differential bearing retainer and bolts (Fig. 175) (Fig. 176).

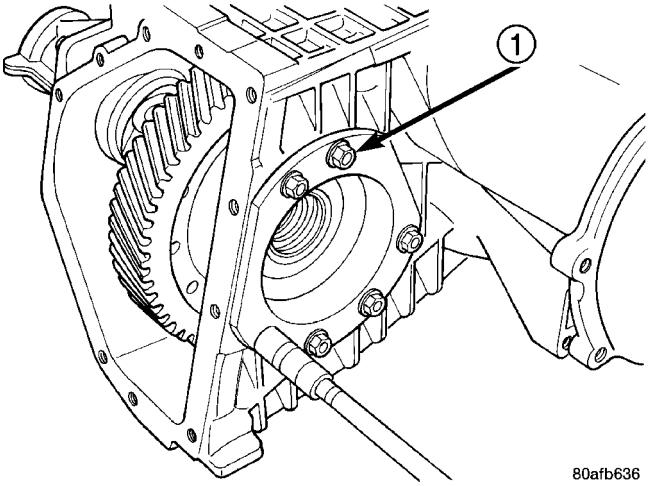

Fig. 175 Differential Retainer Bolts

1 - DIFFERENTIAL RETAINER BOLTS

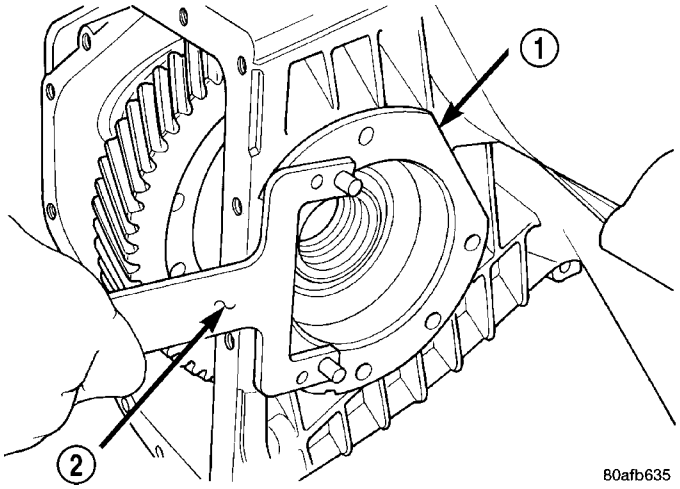

Fig. 176 Remove Bearing Retainer

1 - DIFFERENTIAL BEARING RETAINER
2 - TOOL L-4435

FINAL DRIVE (Continued)

(3) Using a plastic hammer, remove extension housing/adapter plate on the right side of the transaxle.

WARNING: HOLD ONTO DIFFERENTIAL ASSEMBLY TO PREVENT IT FROM ROLLING OUT OF HOUSING.

(4) Remove differential assembly.

(5) Set up dial indicator set C-3339 and tool C-4996 as shown in (Fig. 177) (Fig. 178) to measure side gear end play. **Side gear end play must be within 0.001-0.013 in.**

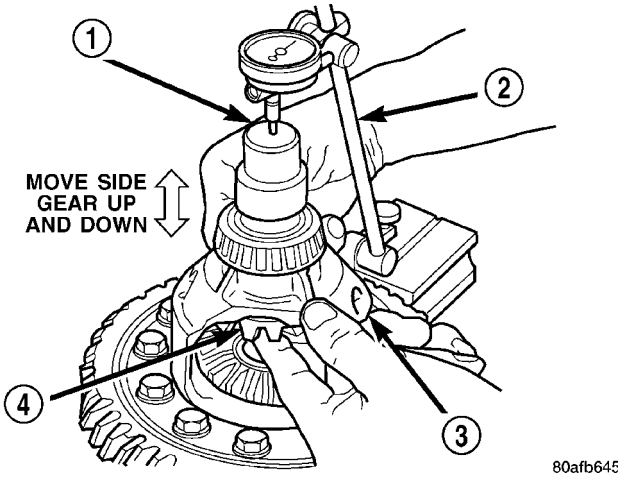

Fig. 177 Checking Side Gear End Play (Extension Housing Side)

1 - SPECIAL TOOL C-4996 (NOTE POSITION)
2 - DIAL INDICATOR SET
3 - DIFFERENTIAL ASSEMBLY
4 - SIDE GEAR

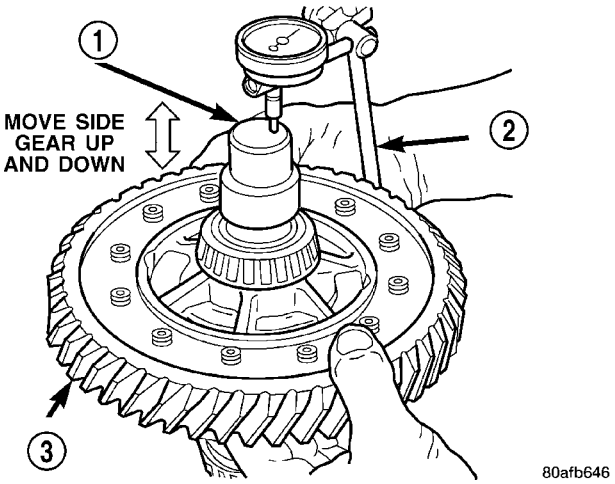

Fig. 178 Checking Side Gear End Play (Ring Gear Side)

1 - SPECIAL TOOL C-4996 (NOTE POSITION)
2 - DIAL INDICATOR SET
3 - DIFFERENTIAL ASSEMBLY

(6) Use Miller Special Tool 5048, 5048-3 Collets, and L-4539-2 Button to remove the differential bearing cone on the extension housing side.

(7) Use Miller Special Tool 5048, 5048-4 Collets, and L-4539-2 Button to remove the differential bearing cone on the bearing retainer side (Fig. 179) (Fig. 180) (Fig. 181).

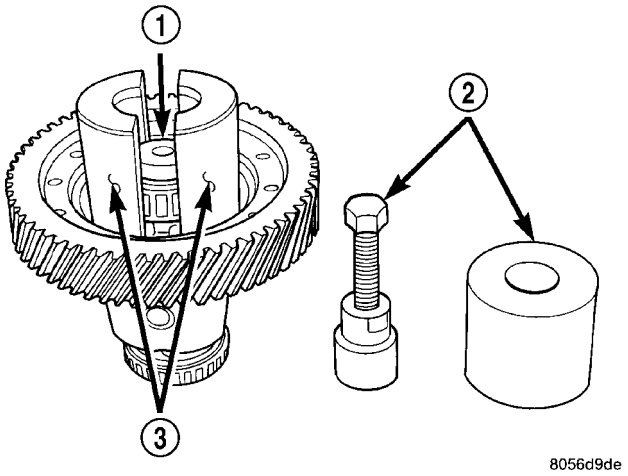

Fig. 179 Position Button and Collets Onto Differential and Bearing (Ring Gear Side)

1 - SPECIAL TOOL L-4539-2
2 - SPECIAL TOOL 5048
3 - SPECIAL TOOL 5048-4

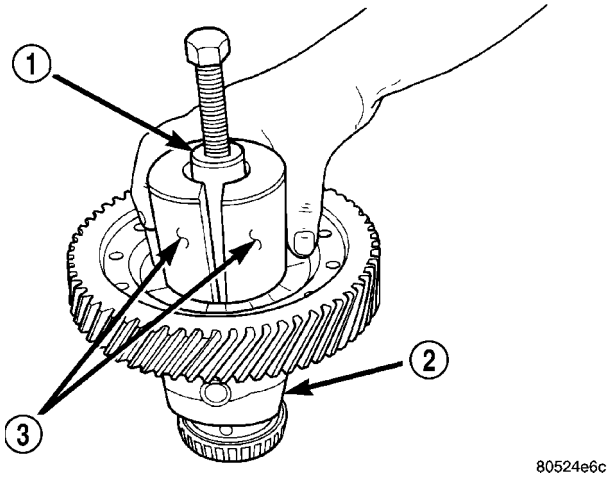

Fig. 180 Position Tool 5048 Over Button and Collets at Differential Bearing (Ring Gear Side)

1 - SPECIAL TO0L 5048
2 - DIFFERENTIAL
3 - SPECIAL TOOL 5048-4

FINAL DRIVE (Continued)

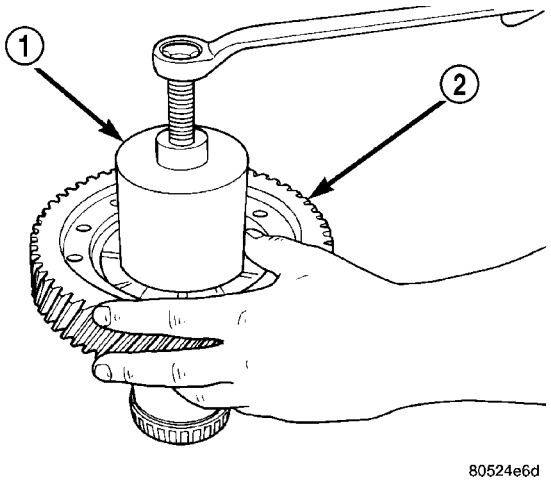

Fig. 181 Remove Differential Bearing Cone (Ring Gear Side)

1 - SPECIAL TOOL 5048
2 - RING GEAR

(8) Using Miller Special Tool L-4518, remove the differential bearing race from the extension housing/ adapter plate.

(9) Using Miller Special Tool 6062A, remove the differential bearing race from the bearing retainer (Fig. 182) (Fig. 183).

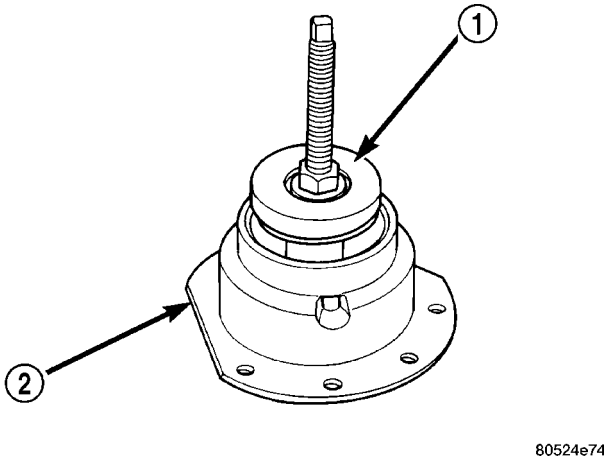

Fig. 182 Position Bearing Cup Remover Tool in Retainer

1 - SPECIAL TOOL 6062A
2 - DIFFERENTIAL BEARING RETAINER

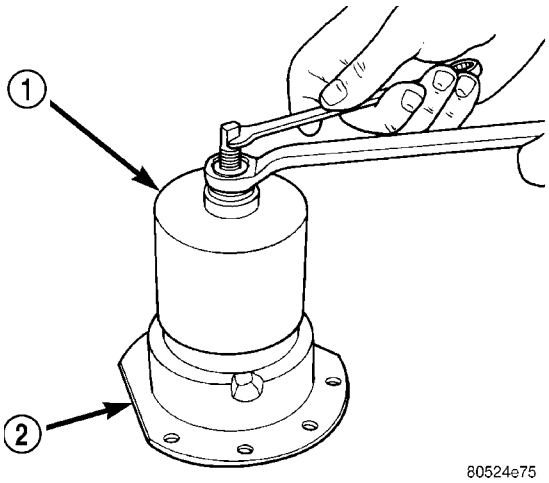

Fig. 183 Remove Bearing Cup

1 - SPECIAL TOOL 6062A
2 - DIFFERENTIAL BEARING RETAINER

DIFFERENTIAL SERVICE TOOLS

COMPONENT	REMOVER	INSTALLER
Diff. Bear. On Retainer Side	5048, 5048-4 Collets, L-4539-2 Button	5052, C-4171
Diff. Bear. On Ext. Hous. Side	5048, 5048-3 Collets, L-4539-2 Button	L-4410, C-4171
Diff. Race. On Retainer Side	6062-A	6061, C-4171
Diff. Race. On Ext. Hous. Side	L-4518	L-4520, C-4171
Extension Housing Seal	7794-A, C-637 Slide Hammer	L-4520, C-4171
Bearing Retainer Seal	794-A, C-637 Slide Hammer	L-4520, C-4171

FINAL DRIVE (Continued)

ASSEMBLY

NOTE: The differential is serviced as an assembly. The only parts that are serviceable within the differential are the differential bearing cups and cones. If any other part fails within the differential, you must replace the differential assembly along with the transfer shaft.

NOTE: Use Mopar® ATF RTV (MS-GF41), or equivalent, on retainer and extension housing/adapter plate to seal to case.

(1) Using Miller Special Tool L-4410, and C-4171, install differential bearing to differential (extension housing side) (Fig. 184).

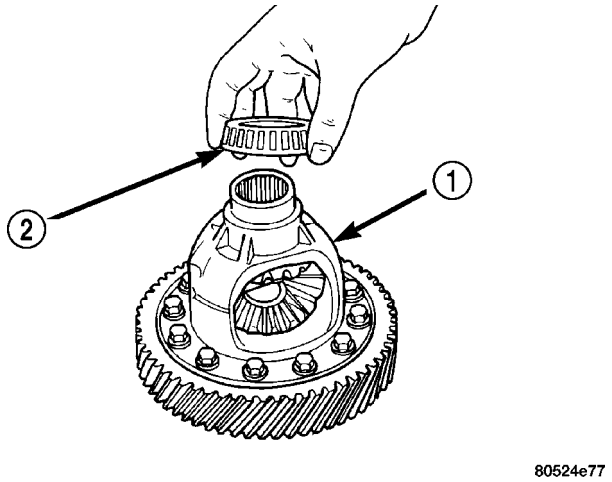

Fig. 184 Position Bearing Cone Onto Differential

1 - DIFFERENTIAL ASSEMBLY
2 - DIFFERENTIAL BEARING

(2) Using Miller Special Tool 5052 and C-4171, install differential bearing to differential (bearing retainer side).

(3) Using Miller Special Tool 6061 and C-4171, install differential bearing race to bearing retainer (Fig. 185).

(4) Using Miller Special Tool L–4520 and C-4171, install differential bearing cup to extension housing.

(5) Measure and adjust differential bearing preload (Refer to 21 - TRANSMISSION/TRANSAXLE/AUTOMATIC - 41TE/FINAL DRIVE - ADJUSTMENTS) .

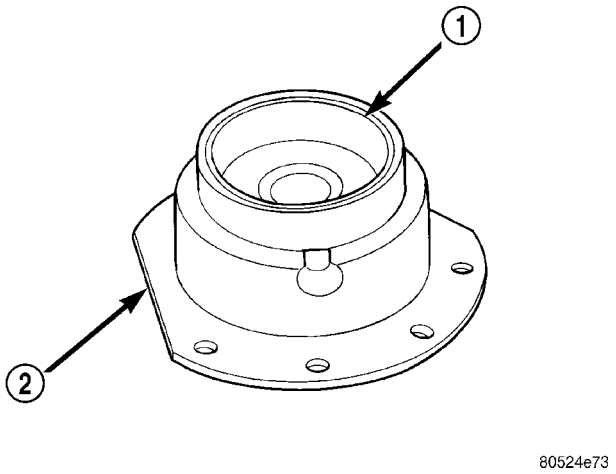

Fig. 185 Differential Bearing Retainer

1 - DIFFERENTIAL BEARING CUP
2 - DIFFERENTIAL BEARING RETAINER

(6) Install differential assembly to case. Install extension housing/adapter plate and bearing retainer.

(7) Install bearing retainer with a bead of Mopar® ATF RTV (MS-GF41) and torque bolts (Fig. 186) to 28 N·m (250 in. lbs.).

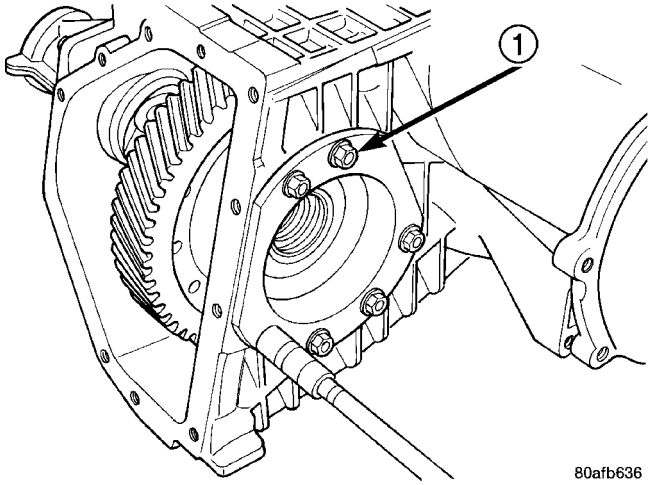

Fig. 186 Differential Retainer Bolts

1 - DIFFERENTIAL RETAINER BOLTS

(8) Install extension housing/adapter plate with a bead of Mopar® ATF RTV (MS-GF41) and torque bolts to 28 N·m (250 in. lbs.).

FINAL DRIVE (Continued)

(9) Install differential cover with a bead of Mopar® ATF RTV (MS-GF41) (Fig. 187) and torque bolts (Fig. 188) to 28 N·m (250 in. lbs.).

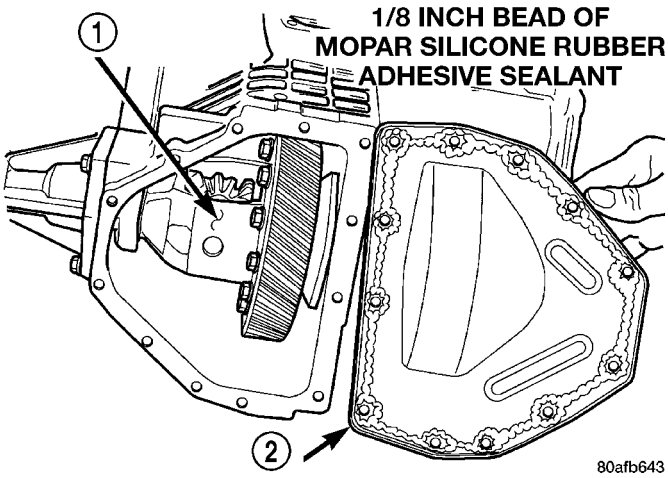

Fig. 187 Install Differential Cover

1 - DIFFERENTIAL ASSEMBLY
2 - DIFFERENTIAL COVER

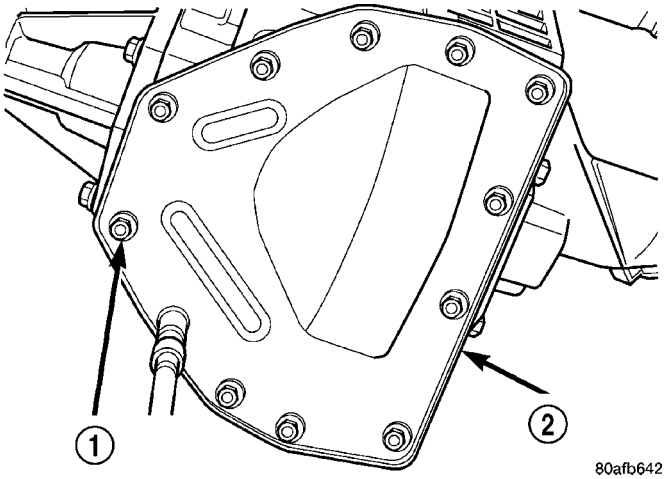

Fig. 188 Differential Cover Bolts

1 - DIFFERENTIAL COVER BOLTS
2 - DIFFERENTIAL COVER

ADJUSTMENTS

DIFFERENTIAL BEARING PRELOAD MEASUREMENT AND ADJUSTMENT

NOTE: Perform all differential bearing preload measurements with the transfer shaft and gear removed.

DIFFERENTIAL BEARING PRELOAD ADJUSTMENT USING EXISTING SHIM

(1) Position the transaxle assembly vertically on the support stand, differential bearing retainer side up.

(2) Install Tool L-4436A into the differential and onto the pinion mate shaft (Fig. 189).

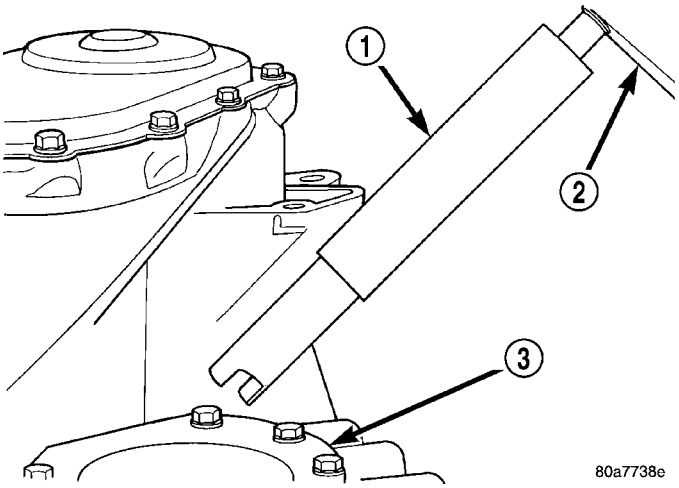

Fig. 189 Tool L-4436 and Torque Wrench

1 - SPECIAL TOOL L-4436–A
2 - TORQUE WRENCH
3 - DIFFERENTIAL BEARING RETAINER

(3) Rotate the differential at least one full revolution to ensure the tapered roller bearings are fully seated.

(4) Using Tool L-4436A and an inch-pound torque wrench, check the turning torque of the differential (Fig. 190). **The turning torque should be between 5 and 18 inch-pounds.**

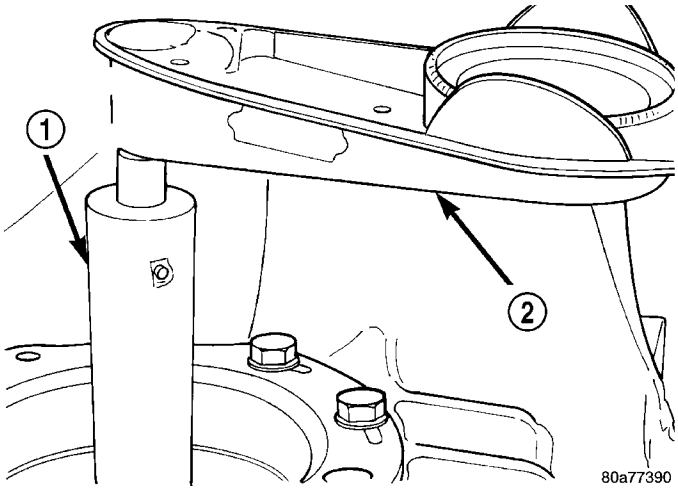

Fig. 190 Checking Differential Bearings Turning Torque

1 - SPECIAL TOOL L-4436–A
2 - TORQUE WRENCH

(5) If the turning torque is within specifications, remove tools. Setup is complete.

(6) If turning torque is not within specifications proceed with the following steps.

FINAL DRIVE (Continued)

(a) Remove differential bearing retainer from the transaxle case.

(b) Remove the bearing cup from the differential bearing retainer using Tool 6062A.

(c) Remove the existing shim from under the cup.

(d) Measure the existing shim.

(e) If the turning torque was too high when measured, install a 0.05 mm (0.002 inch) thinner shim. If the turning torque is was too low, install a 0.05 mm (0.002 inch) thicker shim. Repeat until 5 to 18 inch-pounds turning torque is obtained. Oil Baffle is not required to be installed when making shim selection.

(f) Install the proper shim under the bearing cup. Make sure the oil baffle is installed properly in the bearing retainer, below the bearing shim and cup.

(g) Install the differential bearing retainer using Tool 5052 and C-4171. Seal the retainer to the housing with MOPAR® Adhesive Sealant and torque bolts to 28 N·m (250 in. lbs.).

(7) Using Tool L-4436A and an inch-pound torque wrench, recheck the turning torque of the differential (Fig. 190). **The turning torque should be between 5 and 18 inch-pounds.**

Shim thickness need be determined only if any of the following parts are replaced:

- Transaxle case
- Differential carrier
- Differential bearing retainer
- Extension housing
- Differential bearing cups and cones

DIFFERENTIAL BEARING SHIM CHART

PART NUMBER	SHIM THICKNESS	
	MM	INCH
4659257	.980	0.0386
4659258	1.02	0.0402
4659259	1.06	0.0418
4659260	1.10	0.0434
4659261	1.14	0.0449
4659262	1.18	0.0465
4659263	1.22	0.0481
4659264	1.26	0.0497
4659265	1.30	0.0512
4659266	1.34	0.0528
4659267	1.38	0.0544
4659268	1.42	0.0560
4659269	1.46	0.0575
4659270	1.50	0.0591
4659271	1.54	0.0607
4659272	1.58	0.0623
4659273	1.62	0.0638
4659274	1.66	0.0654
4659275	1.70	0.0670
4659283	2.02	0.0796
4659284	2.06	0.0812

FINAL DRIVE (Continued)

PRELOAD ADJUSTMENT W/O SHIM

(1) Remove the bearing cup from the differential bearing retainer using Miller special Tool 6062A.

(2) Remove existing shim from under bearing cup.

(3) Reinstall the bearing cup into the retainer using Miller Special Tool 6061, and C-4171.

NOTE: Oil baffle is not required when making the shim calculation.

(4) Install the bearing retainer into the case. Torque bolts to 28 N•m (250 in. lbs.).

(5) Position the transaxle assembly vertically on the support stand and install Miller Special Tool L-4436-A into the bearing retainer.

(6) Rotate the differential at least one full revolution to ensure the tapered roller bearings are fully seated.

(7) Attach a dial indicator to the case and zero the dial. Place the tip on the end of Special Tool L-4436-A.

(8) Place a large screwdriver to each side of the ring gear and lift. Check the dial indicator for the amount of end play.

CAUTION: Do not damage the transaxle case and/or differential retainer sealing surface.

(9) Using the end play measurement that was determined, add 0.18mm (0.007 inch). This should give you between 5 and 18 inch pounds of bearing preload. Refer to the Differential Bearing Shim Chart to determine which shim to use.

(10) Remove the differential bearing retainer. Remove the bearing cup.

(11) Install the oil baffle. Install the proper shim combination under the bearing cup.

(12) Install the differential bearing retainer. Seal the retainer to the housing with Mopar® Silicone Rubber Adhesive Sealant. Torque bolts to 28 N•m (250 in. lbs.).

(13) Using Miller Special Tool L-4436-A and an inch-pound torque wrench, check the turning torque of the differential (Fig. 190). The turning torque should be between 5-18 inch-pounds.

NOTE: If turning torque is too high install a 0.05mm (0.002 inch) thicker shim. If the turning torque is too low, install a 0.05mm (0.002 inch) thinner shim. Repeat until 5-18 inch-pounds of turning torque is obtained.

FLUID

STANDARD PROCEDURE

FLUID LEVEL AND CONDITION CHECK

NOTE: Only transmission fluid of the type labeled Mopar ATF+4 (Automatic Transmission Fluid) should be used in this transaxle.

FLUID LEVEL CHECK

The transmission sump has a fluid level indicator (dipstick) to check oil similar to most automatic transmissions. It is located on the left side of the engine. Be sure to wipe all dirt from dipstick handle before removing.

The torque converter fills in both the P Park and N Neutral positions. Place the selector lever in P Park to be sure that the fluid level check is accurate. **The engine should be running at idle speed for at least one minute, with the vehicle on level ground.** At normal operating temperature 82° C (180° F), the fluid level is correct if it is in the HOT region on the oil level indicator (Fig. 191). The fluid level should be within the COLD region of the dipstick at 27° C (80° F) fluid temperature.

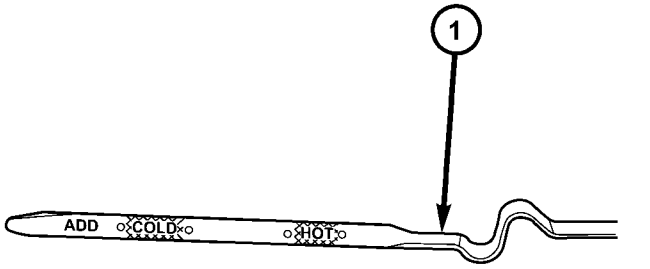

Fig. 191 Fluid Level Indicator

1 - FLUID LEVEL INDICATOR

FLUID (Continued)

FLUID LEVEL CHECK USING DRB

NOTE: Engine and Transaxle should be at normal operating temperature before performing this procedure.

(1) Start engine and apply parking brake.
(2) Hook up DRB scan tool and select transmission.
(3) Select sensors.
(4) Read the transmission temperature value.
(5) Compare the fluid temperature value with the fluid temperature chart (Fig. 192).
(6) Adjust transmission fluid level shown on the indicator according to the chart.
(7) Check transmission for leaks.

Low fluid level can cause a variety of conditions because it allows the pump to take in air along with the fluid. As in any hydraulic system, air bubbles make the fluid spongy, therefore, pressures will be low and build up slowly.

Improper filling can also raise the fluid level too high. When the transaxle has too much fluid, the gears churn up foam and cause the same conditions which occur with a low fluid level.

In either case, air bubbles can cause overheating and/or fluid oxidation, and varnishing. This can interfere with normal valve, clutch, and accumulator operation. Foaming can also result in fluid escaping from the transaxle vent where it may be mistaken for a leak.

FLUID CONDITION

Along with fluid level, it is important to check the condition of the fluid. When the fluid smells burned, and is contaminated with metal or friction material particles, a complete transaxle recondition is probably required. Be sure to examine the fluid on the dipstick closely. If there is any doubt about its condition, drain out a sample for a double check.

Mopar® ATF+4 (Automatic Transmission Fluid) when new is red in color. The ATF is dyed red so it can be identified from other fluids used in the vehicle such as engine oil or antifreeze. The red color is not permanent and is not an indicator of fluid condition. As the vehicle is driven, the ATF will begin to look darker in color and may eventually become brown.

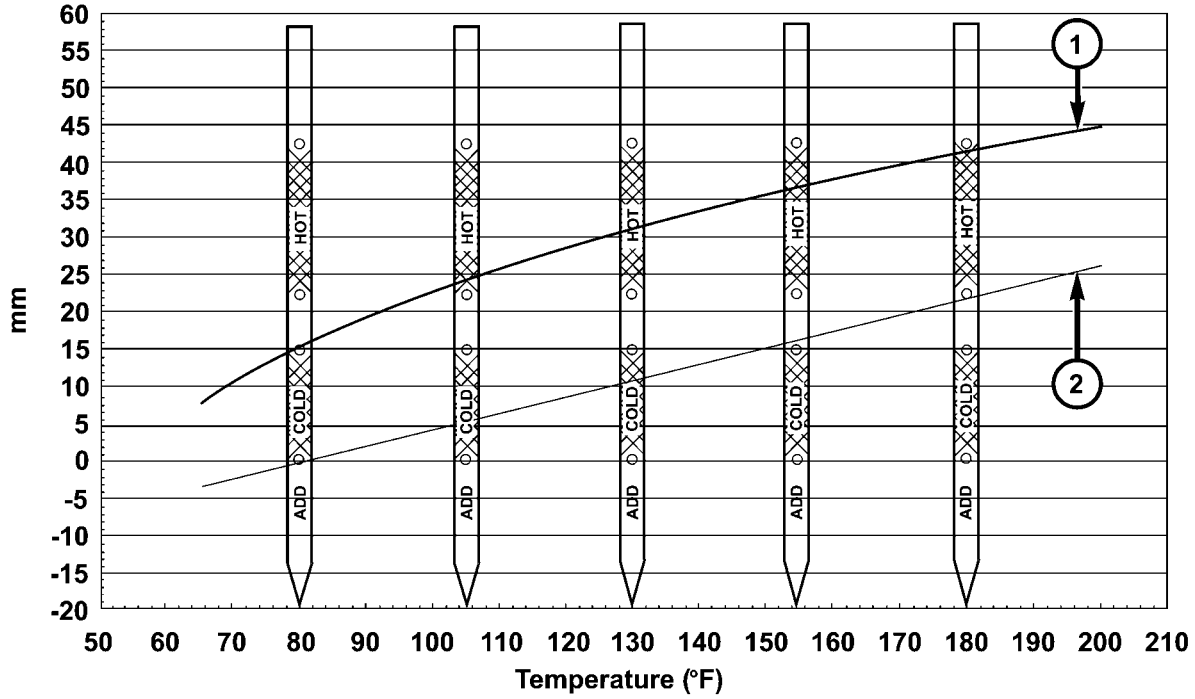

80d64e6e

Fig. 192 Transmission Fluid Temperature Chart

1 - MAX. LEVEL
2 - MIN. LEVEL

FLUID (Continued)

This is normal. ATF+4 also has a unique odor that may change with age. Consequently, **odor and color cannot be used to indicate the fluid condition or the need for a fluid change.**

After the fluid has been checked, seat the dipstick fully to seal out water and dirt.

STANDARD PROCEDURE - FLUID AND FILTER SERVICE

NOTE: Refer to the maintenance schedules in LUBRICATION and MAINTENANCE, or the vehicle owner's manual, for the recommended maintenance (fluid/filter change) intervals for this transaxle.

NOTE: Only fluids of the type labeled Mopar® ATF+4 (Automatic Transmission Fluid) should be used. A filter change should be made at the time of the transmission oil change. The magnet (on the inside of the oil pan) should also be cleaned with a clean, dry cloth.

NOTE: If the transaxle is disassembled for any reason, the fluid and filter should be changed.

FLUID/FILTER SERVICE (RECOMMENDED)

(1) Raise vehicle on a hoist. Refer to LUBRICATION and MAINTENANCE for proper procedures. Place a drain container with a large opening, under transaxle oil pan.

(2) Loosen pan bolts and tap the pan at one corner to break it loose allowing fluid to drain, then remove the oil pan.

(3) Install a new filter and o-ring on bottom of the valve body (Fig. 193).

(4) Clean the oil pan and magnet. Reinstall pan using new Mopar Silicone Adhesive sealant. Tighten oil pan bolts to 19 N·m (165 in. lbs.).

(5) Pour four quarts of Mopar® ATF+4 (Automatic Transmission Fluid) through the dipstick opening.

(6) Start engine and allow to idle for at least one minute. Then, with parking and service brakes applied, move selector lever momentarily to each position, ending in the park or neutral position.

(7) Check the transaxle fluid level and add an appropriate amount to bring the transaxle fluid level to 3mm (1/8 in.) below the lowest mark on the dipstick (Fig. 194).

(8) Recheck the fluid level after the transaxle has reached normal operating temperature (180°F.). Refer to Fluid Level and Condition Check for the proper fluid fill procedure.

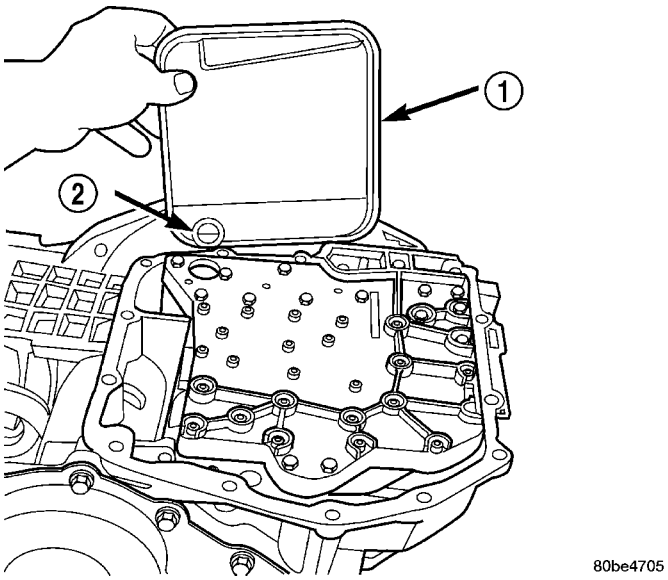

Fig. 193 Filter and O-Ring

1 - OIL FILTER
2 - O-RING

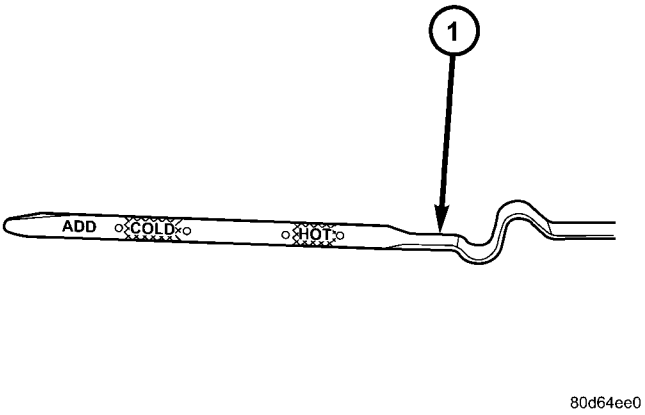

Fig. 194 Fluid Level Indicator

1 - FLUID LEVEL INDICATOR

(9) To prevent dirt from entering transaxle, make certain that dipstick is fully seated into the dipstick opening.

DIPSTICK TUBE FLUID SUCTION METHOD (ALTERNATIVE)

(1) When performing the fluid suction method, make sure the transaxle is at full operating temperature.

(2) To perform the dipstick tube fluid suction method, use a suitable fluid suction device (Vacula™ or equivalent).

(3) Insert the fluid suction line into the dipstick tube.

FLUID (Continued)

NOTE: Verify that the suction line is inserted to the lowest point of the transaxle oil pan. This will ensure complete evacuation of the fluid in the pan.

(4) Follow the manufacturers recommended procedure and evacuate the fluid from the transaxle.

(5) Remove the suction line from the dipstick tube.

(6) Pour four quarts of Mopar® ATF+4 (Automatic Transmission Fluid) through the dipstick opening.

(7) Start engine and allow to idle for at least one minute. Then, with parking and service brakes applied, move selector lever momentarily to each position, ending in the park or neutral position.

(8) Check the transaxle fluid level and add an appropriate amount to bring the transaxle fluid level to 3mm (1/8 in.) below the lowest mark on the dipstick (Fig. 194).

(9) Recheck the fluid level after the transaxle has reached normal operating temperature (180°F.). (Refer to 21 - TRANSMISSION/TRANSAXLE/AUTOMATIC - 41TE/FLUID - STANDARD PROCEDURE)

(10) To prevent dirt from entering transaxle, make certain that dipstick is fully seated into the dipstick opening.

GEAR SHIFT CABLE

REMOVAL

(1) Loosen set screw and remove knob from shifter handle (Fig. 195) .

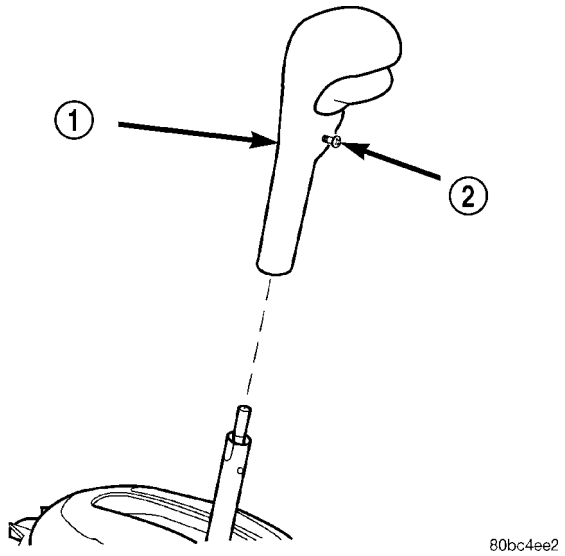

Fig. 195 Gearshift Knob Removal/Installation

1 - SHIFTER KNOB
2 - SET SCREW

(2) Remove the center console assembly as shown in (Fig. 196) .

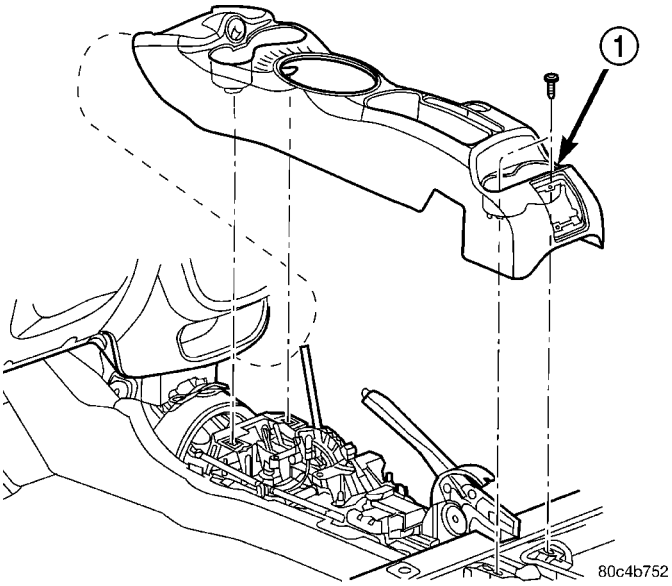

Fig. 196 Center Console Removal/Installation

1 - CENTER CONSOLE

(3) Remove shifter bezel (Fig. 197) .

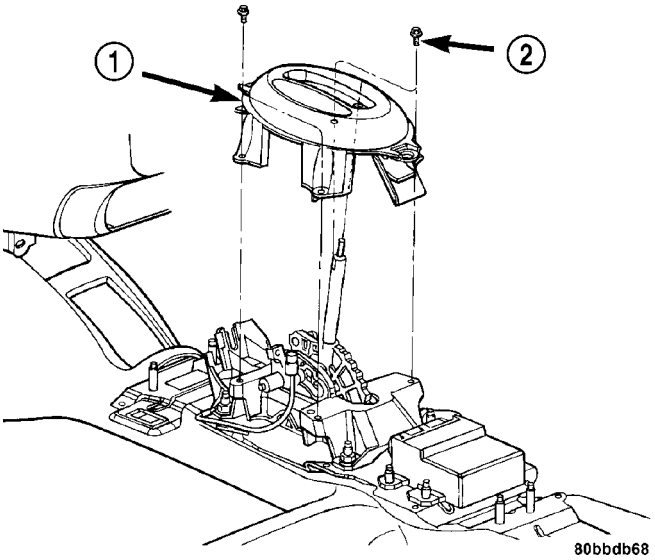

Fig. 197 Shifter Bezel Removal/Installation

1 - BEZEL
2 - SCREW (4)

GEAR SHIFT CABLE (Continued)

(4) Disconnect shift cable from shifter mechanism as shown in (Fig. 198) .

(5) Remove three grommet plate to floor pan nuts as shown in (Fig. 198) .

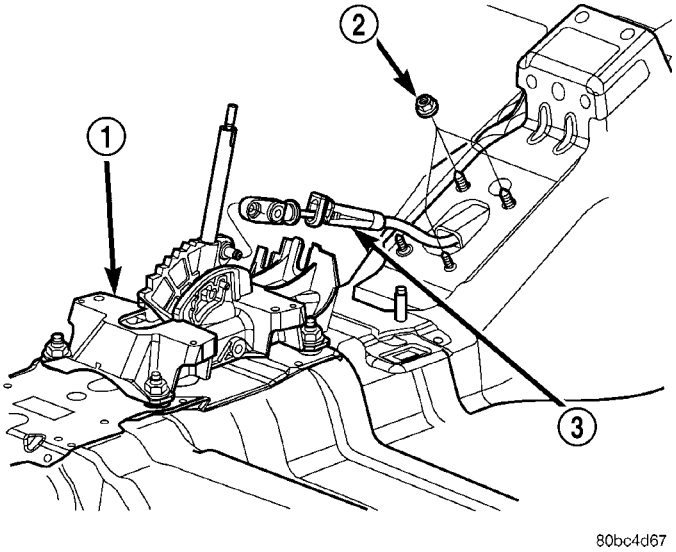

Fig. 198 Gearshift Cable at Shifter Assembly

1 - SHIFTER ASSEMBLY
2 - GROMMET PLATE NUT
3 - SHIFT CABLE

(6) Remove air cleaner assembly (Fig. 199) .

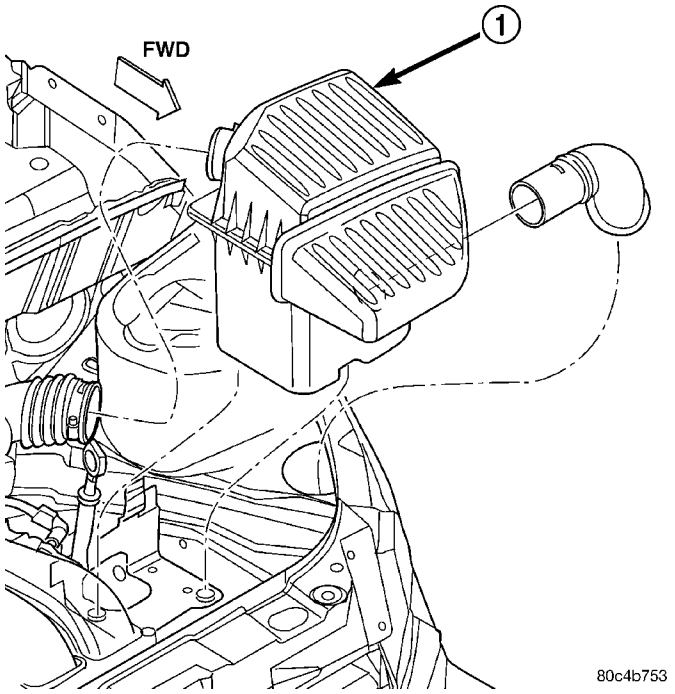

Fig. 199 Air Cleaner Assembly Removal/Installation

1 - AIR CLEANER ASSEMBLY

(7) Disconnect both battery cables, remove battery hold down clamp and bolt, and remove battery (Fig. 200) .

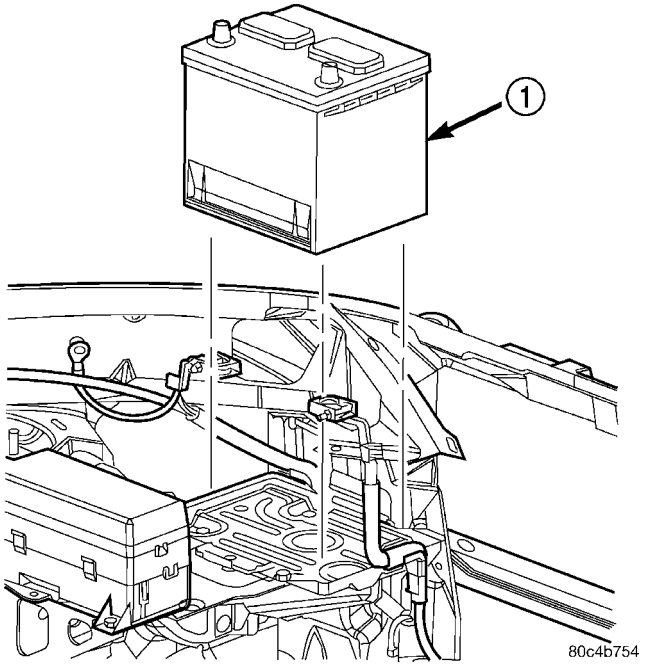

Fig. 200 Battery Removal/Installation

1 - BATTERY

(8) Remove battery tray (Fig. 201) from bracket.

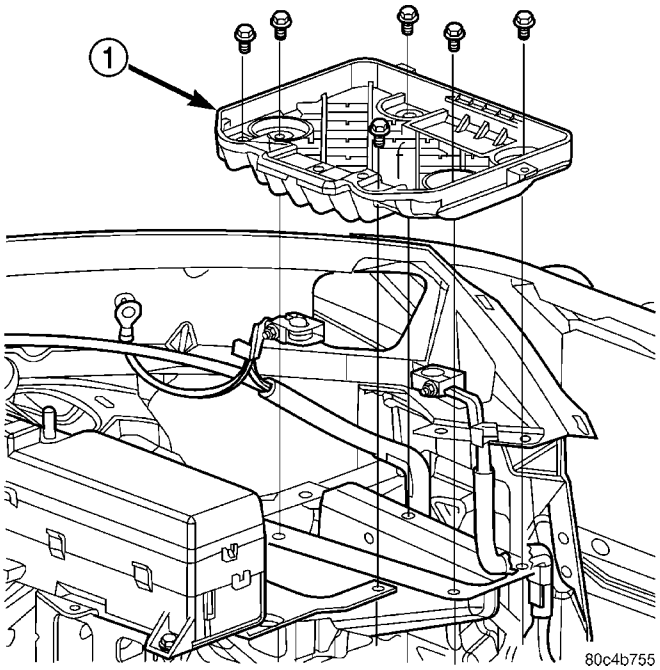

Fig. 201 Battery Tray Removal/Installation

1 - BATTERY TRAY

GEAR SHIFT CABLE (Continued)

(9) Disconnect shifter cable from shift lever and remove from bracket (Fig. 202) .

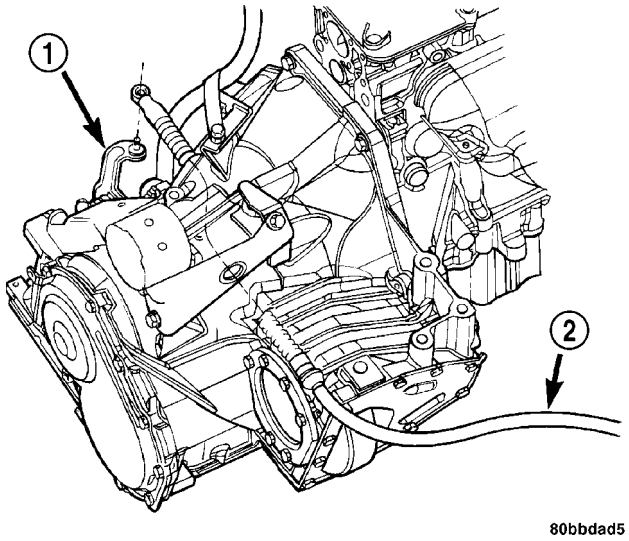

Fig. 202 Gear Shift Cable at Transaxle

1 - SHIFT LEVER
2 - SHIFT CABLE

(10) Raise vehicle on hoist.

(11) Remove catalytic converter heat shield (Fig. 203) .

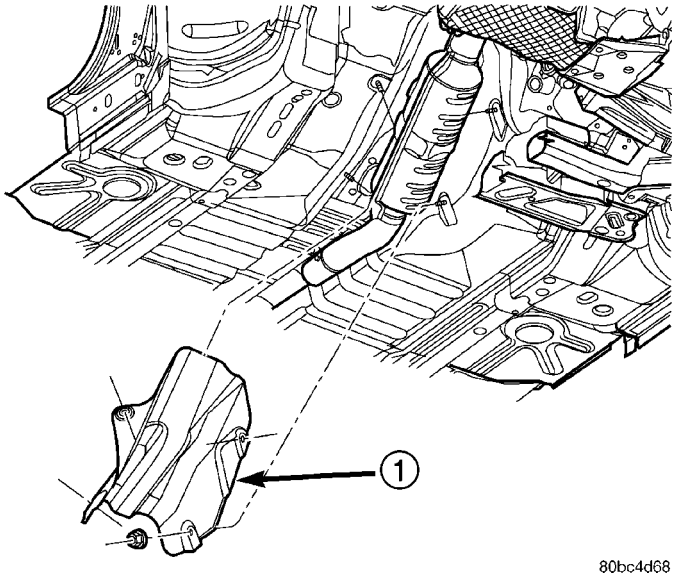

Fig. 203 Catalytic Converter Heat Shield

1 - CONVERTER HEAT SHIELD

(12) Remove remaining grommet plate screw and remove cable assembly from vehicle (Fig. 204) .

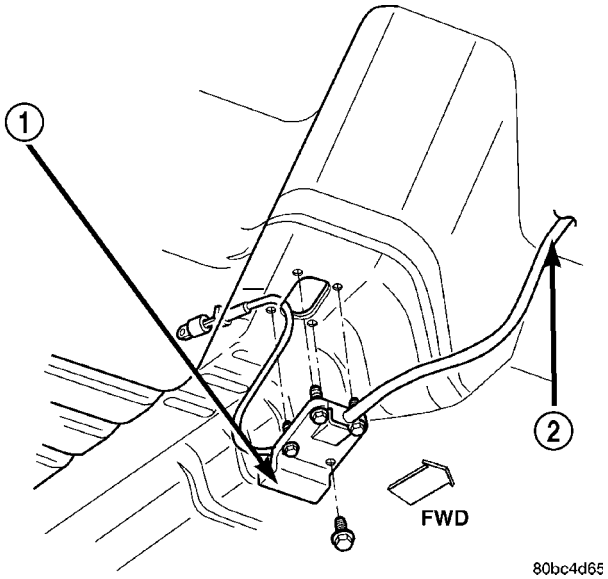

Fig. 204 Grommet Plate/Shift Cable at Floor Pan

1 - GROMMET PLATE
2 - SHIFT CABLE

INSTALLATION

(1) Install cable assembly through floor pan opening and secure to floor pan with grommet plate and one screw (Fig. 204) . Make sure the three grommet plate studs protrude through cable assembly and floor pan and tighten screw to 7 N·m (60 in. lbs.).

(2) Route transaxle end of cable assembly into engine compartment and over transaxle assembly.

(3) Install catalytic converter heat shield (Fig. 203).

(4) Install gear shift cable to bracket and connect to shift lever (Fig. 202) .

(5) Lower vehicle.

(6) Install and tighten the three grommet plate-to-floor pan nuts. Tighten to 6 N·m (50 in. lbs.) torque.

(7) Connect gearshift cable to shifter assembly as shown in (Fig. 198) .

(8) Install shifter bezel (Fig. 197) .

(9) **Adjust gearshift cable as follows:**

(a) Place gearshift lever in the PARK (P) position.

(b) Loosen shift cable adjustment screw (Fig. 205) .

(c) Verify transaxle is in the PARK (P) position and the shifter lever is in gated PARK..

(d) Tighten shift cable adjustment screw to 8 N·m (70 in. lbs.) torque.

(10) Install battery tray (Fig. 201) .

(11) Install battery and hold down clamp (Fig. 200).

(12) Install the air cleaner assembly (Fig. 199) .

GEAR SHIFT CABLE (Continued)

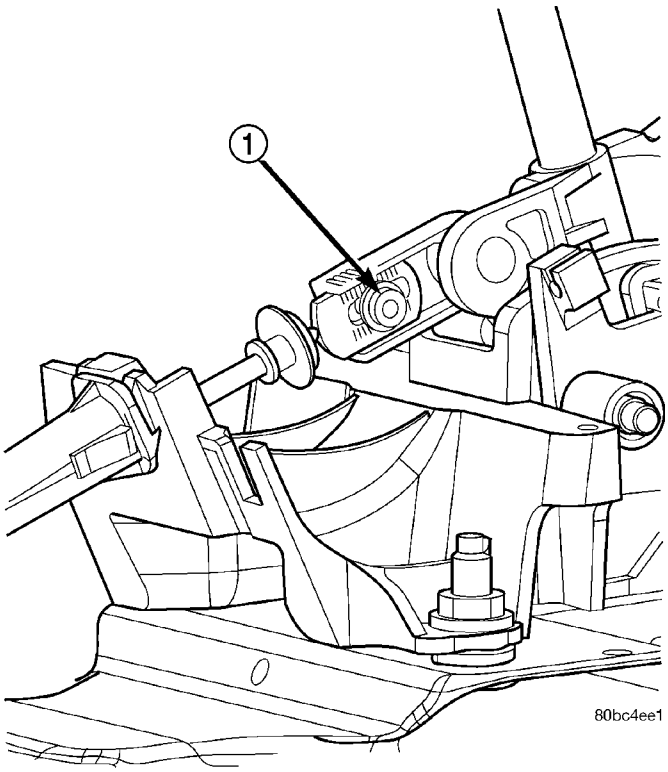

Fig. 205 Gearshift Cable Adjustment Screw

1 - GEARSHIFT CABLE ADJUSTMENT SCREW

(13) Install center console assembly (Fig. 196) .

(14) Install gearshift knob and tighten set screw to 2 N·m (17 in. lbs.) torque (Fig. 195) .

(15) Connect battery cables.

(16) Verify that engine starter operates in both PARK (P) and NEUTRAL (N). Starter should not operate in any other gear position.

ADJUSTMENTS

GEARSHIFT CABLE

The engine starter should only operate when the transaxle shift lever is in the PARK (P) or NEUTRAL (N) positions. If the engine starts in any other gear position, or the vehicle rolls when the shifter is in gated PARK (P), a gearshift cable adjustment is necessary.

ADJUSTMENT

(1) Loosen set screw and remove knob from shifter handle (Fig. 206) .

(2) Remove the center console assembly as shown in (Fig. 207) .

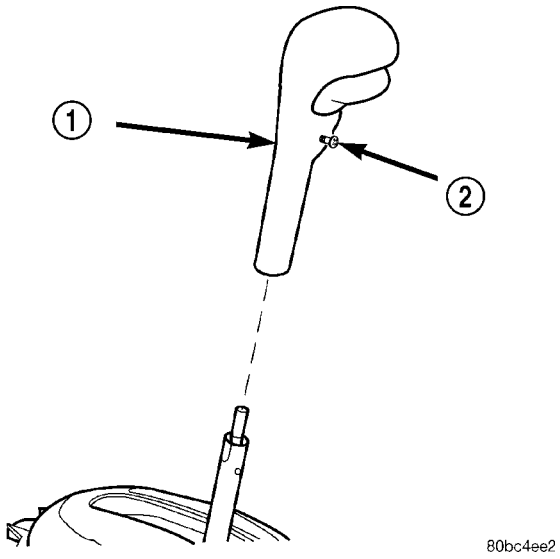

Fig. 206 Gearshift Knob Removal/Installation

1 - SHIFTER KNOB
2 - SET SCREW

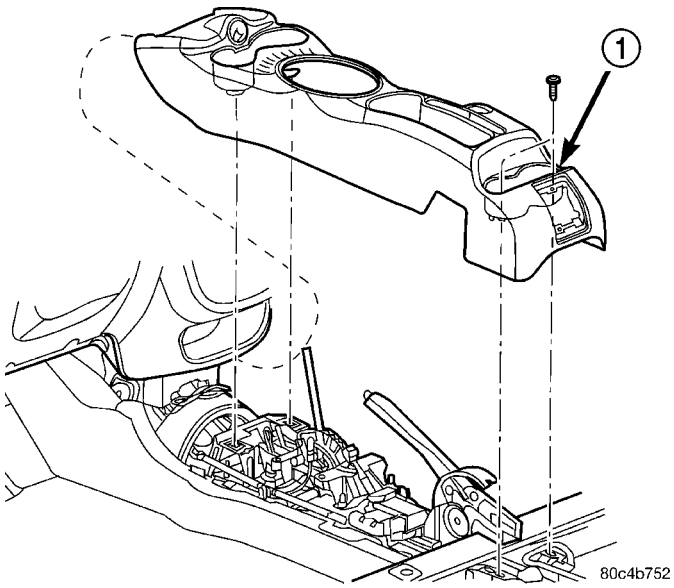

Fig. 207 Center Console Removal/Installation

1 - CENTER CONSOLE

GEAR SHIFT CABLE (Continued)

(3) **Adjust gearshift cable as follows:**

(a) Place gearshift lever in the PARK (P) position.

(b) Loosen shift cable adjustment screw (Fig. 208) .

(c) Move transaxle manual lever to the PARK. Verify transaxle is in PARK by attempting to roll vehicle in either direction.

(d) Tighten shift cable adjustment screw to 8 N·m (70 in. lbs.) torque.

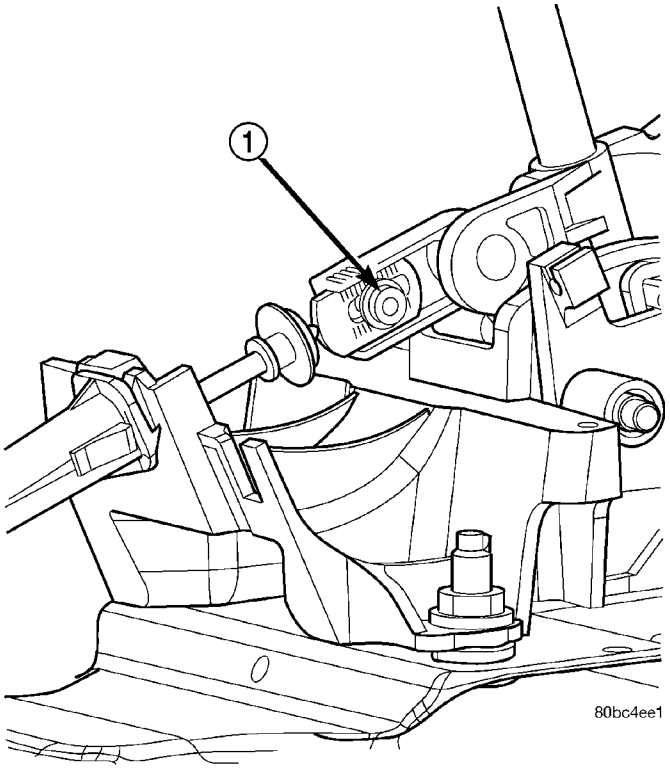

Fig. 208 Gearshift Cable Adjustment Screw

1 - GEARSHIFT CABLE ADJUSTMENT SCREW

(4) Verify proper cable adjustment. Engine should start with the shifter lever in PARK (P) and NEUTRAL (N) positions ONLY.

(5) Install center console assembly (Fig. 207) .

(6) Install gearshift knob and tighten set screw to 2 N·m (17 in. lbs.) torque (Fig. 206) .

HOLDING CLUTCHES

DESCRIPTION

Two hydraulically applied multi-disc clutches are used to hold planetary geartrain components stationary while the input clutches drive others. The 2/4 and Low/Reverse clutches are considered holding clutches and are contained at the rear of the transaxle case. (Fig. 209) .

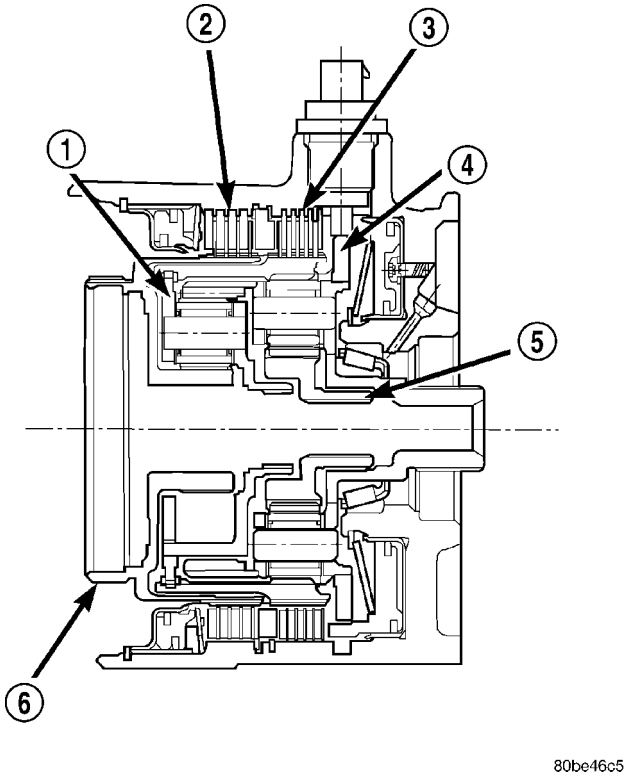

Fig. 209 2/4 and Low/Reverse Clutches

1 - FRONT PLANET CARRIER/REAR ANNULUS
2 - 2/4 CLUTCH
3 - L/R CLUTCH
4 - REAR PLANET CARRIER/FRONT ANNULUS
5 - REAR SUN GEAR
6 - FRONT SUN GEAR ASSEMBLY

OPERATION

NOTE: Refer to the “Elements In Use” chart in Diagnosis and Testing for a collective view of which clutch elements are applied at each position of the selector lever.

2/4 CLUTCH

The 2/4 clutch is hydraulically applied in second and fourth gears by pressurized fluid against the 2/4 clutch piston. When the 2/4 clutch is applied, the front sun gear assembly is held or grounded to the transaxle case.

LOW/REVERSE CLUTCH

The Low/Reverse clutch is hydraulically applied in park, reverse, neutral, and first gears by pressurized fluid against the Low/Reverse clutch piston. When the Low/Reverse clutch is applied, the front planet carrier/rear annulus assembly is held or grounded to the transaxle case.

INPUT CLUTCH ASSEMBLY

DISASSEMBLY

(1) Mount input clutch assembly to Input Clutch Pressure Fixture (Tool 8391).

(2) Tap down reverse clutch reaction plate to release pressure from snap ring (Fig. 210).

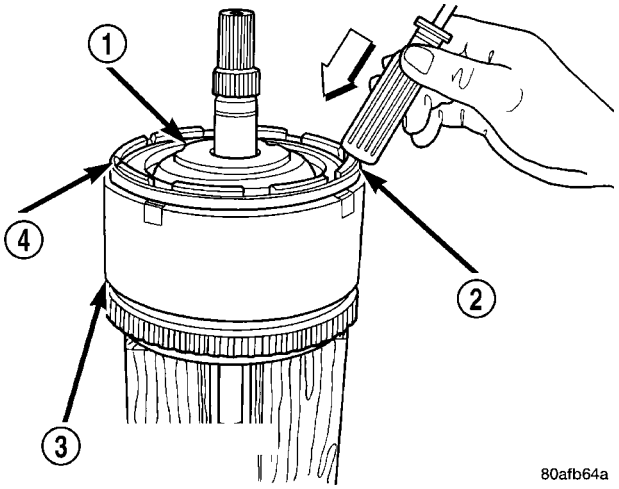

Fig. 210 Tapping Reaction Plate

1 - #4 THRUST PLATE (SELECT)
2 - TAP DOWN REVERSE CLUTCH REACTION PLATE TO REMOVE OR INSTALL SNAP RING
3 - INPUT SHAFT CLUTCHES RETAINER ASSEMBLY
4 - REVERSE CLUTCH REACTION PLATE

(3) Remove reverse clutch snap ring (Fig. 211).

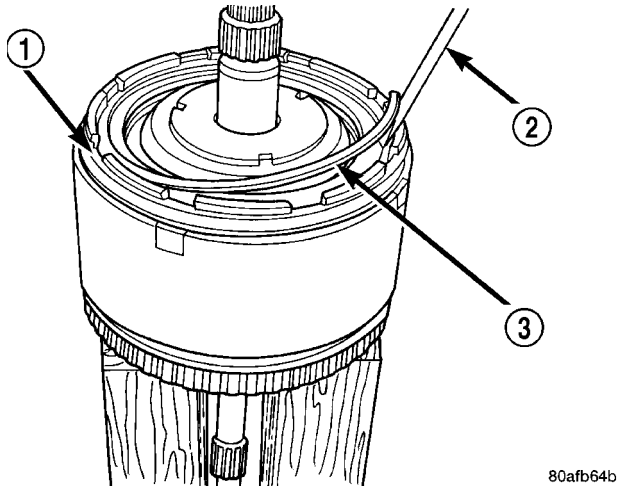

Fig. 211 Reverse Clutch Snap Ring

1 - REACTION PLATE
2 - SCREWDRIVER
3 - REVERSE CLUTCH SNAP RING (SELECT)

(4) Pry up and remove reverse clutch reaction plate (Fig. 212).

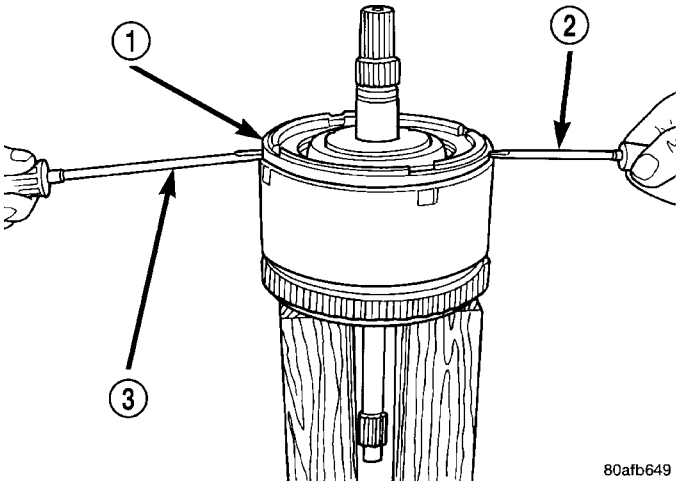

Fig. 212 Pry Reverse Clutch Reaction Plate

1 - REVERSE CLUTCH REACTION PLATE
2 - SCREWDRIVER
3 - SCREWDRIVER

INPUT CLUTCH ASSEMBLY (Continued)

(5) Remove reverse clutch pack (Fig. 213). **Tag components for assembly identification.**

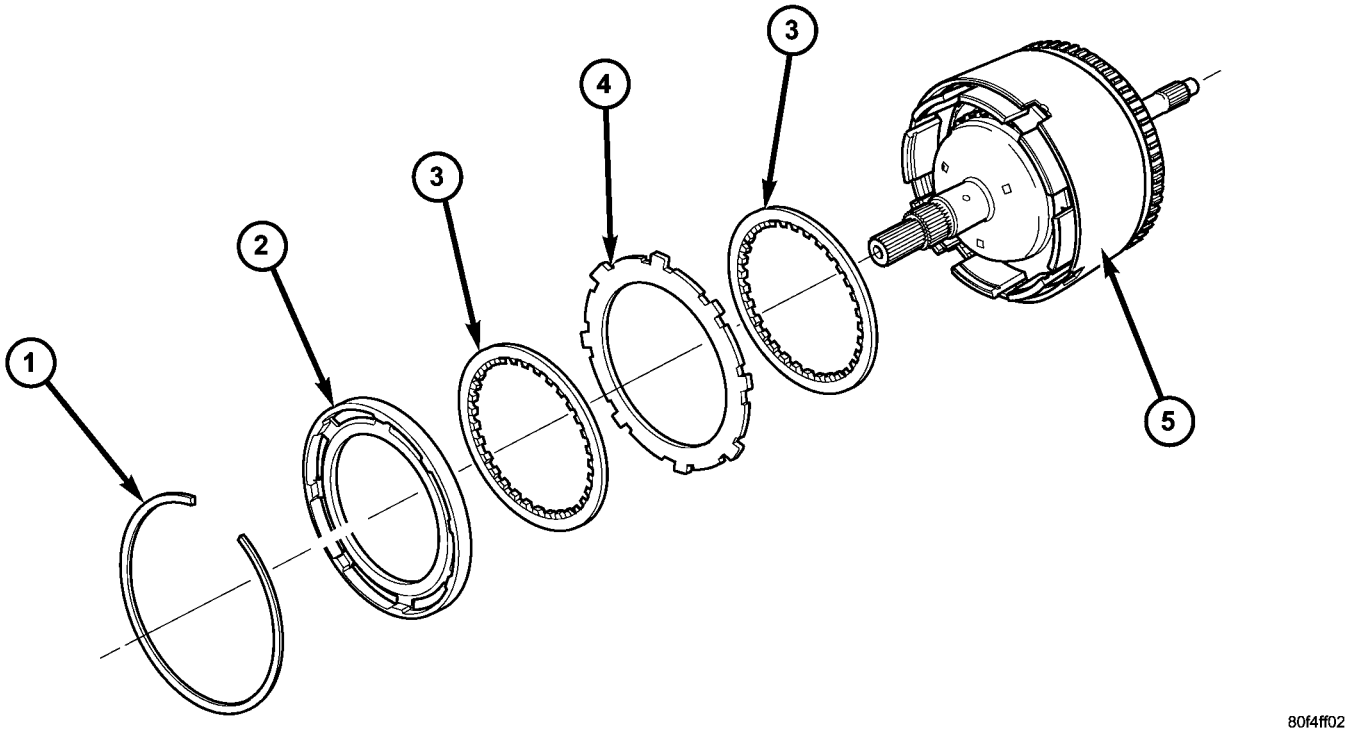

Fig. 213 Reverse Clutch Assembly

1 - SNAP RING
2 - REACTION PLATE
3 - CLUTCH DISC (2)
4 - CLUTCH PLATE (1)
5 - INPUT CLUTCH ASSEMBLY

INPUT CLUTCH ASSEMBLY (Continued)

(6) Remove the OD/Reverse pressure plate snap ring (Fig. 214).

(7) Remove OD/Reverse pressure plate (Fig. 214).

(8) Remove OD/Reverse pressure plate wave snap ring (Fig. 214).

(9) Remove OD clutch pack (Fig. 214). **Tag components for assembly identification.**

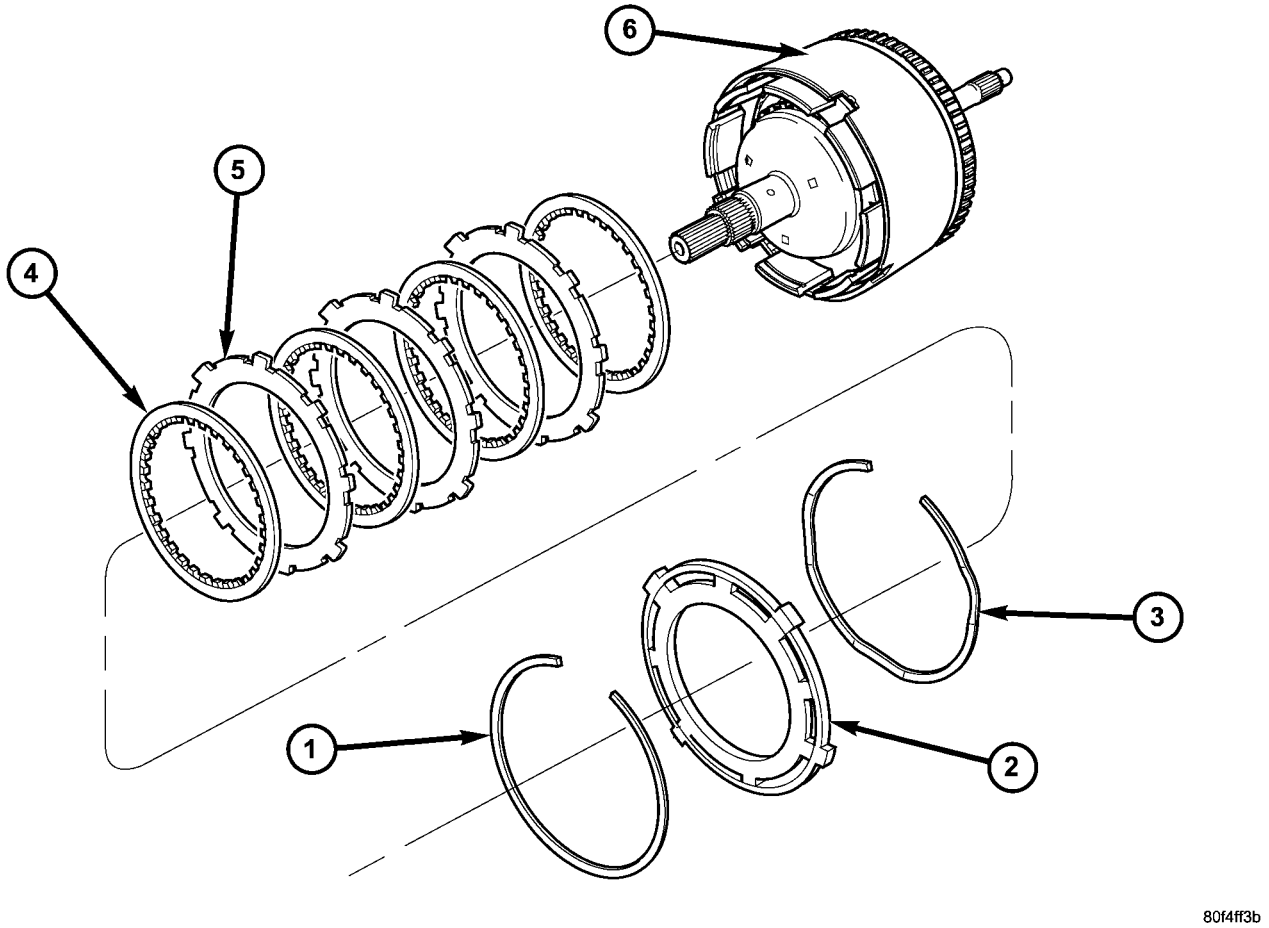

Fig. 214 Overdrive Clutch Assembly

1 - SNAP RING
2 - OD/REVERSE PRESSURE PLATE
3 - SNAP RING (WAVE)
4 - CLUTCH DISC (4)
5 - CLUTCH STEEL (3)
6 - INPUT CLUTCH ASSEMBLY

INPUT CLUTCH ASSEMBLY (Continued)

(10) Remove and inspect OD and UD Shafts, as well as #3 thrust washer and plate, and #2 needle bearing (Fig. 215).

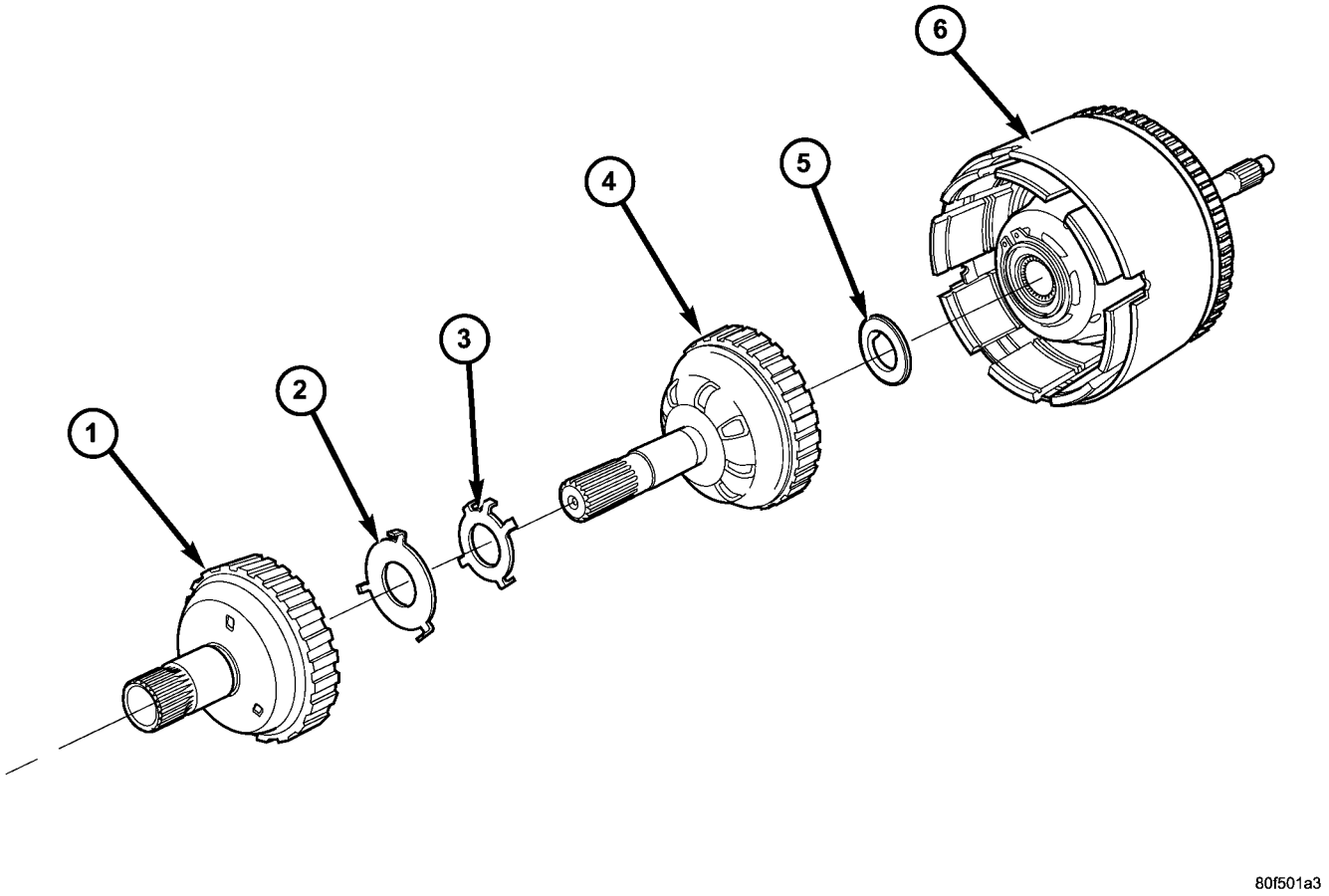

Fig. 215 Overdrive/Underdrive Shafts

1 - OVERDRIVE SHAFT
2 - #3 THRUST PLATE (3 TABS)
3 - #3 THRUST WASHER (5 TABS)
4 - UNDERDRIVE SHAFT
5 - #2 NEEDLE BEARING (3 TABS)
6 - INPUT CLUTCH ASSEMBLY

INPUT CLUTCH ASSEMBLY (Continued)

(11) Remove the OD/UD reaction plate tapered snap ring, reaction plate, and first friction disc (Fig. 216).

(12) Remove the UD clutch flat snap ring and rest of UD clutch pack (Fig. 216). **Tag clutch pack for assembly identification.**

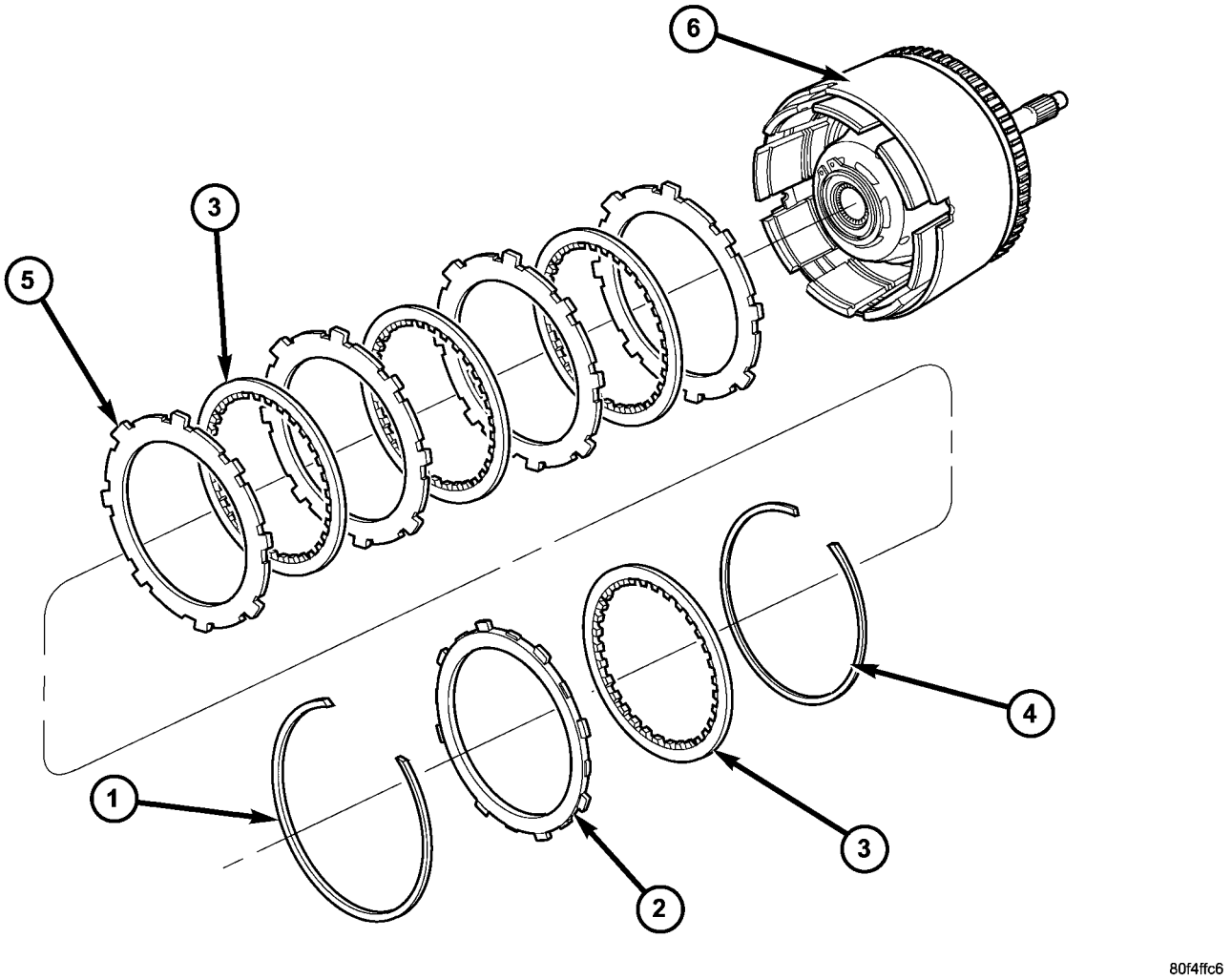

Fig. 216 Underdrive Clutch Assembly

1 - SNAP RING (TAPERED)
2 - OD/UD REACTION PLATE
3 - CLUTCH DISC
4 - SNAP RING (FLAT)
5 - CLUTCH PLATE
6 - INPUT CLUTCH ASSEMBLY

INPUT CLUTCH ASSEMBLY (Continued)

CAUTION: Compress return spring just enough to remove or install snap ring.

(13) Using Tool 5059A and an arbor press, compress UD clutch piston/spring enough to remove snap ring (Fig. 217) (Fig. 218).

(14) Remove spring retainer, spring, and piston (Fig. 218).

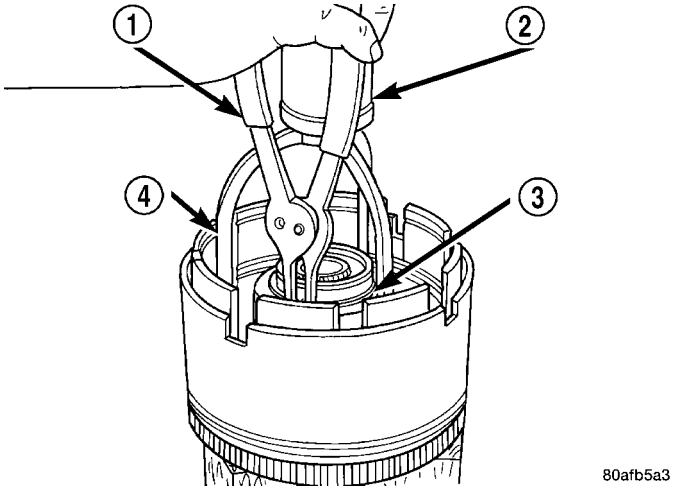

Fig. 217 UD Spring Retainer Snap Ring

1 - SNAP RING PLIERS
2 - ARBOR PRESS RAM
3 - SNAP RING
4 - SPECIAL TOOL 5059A

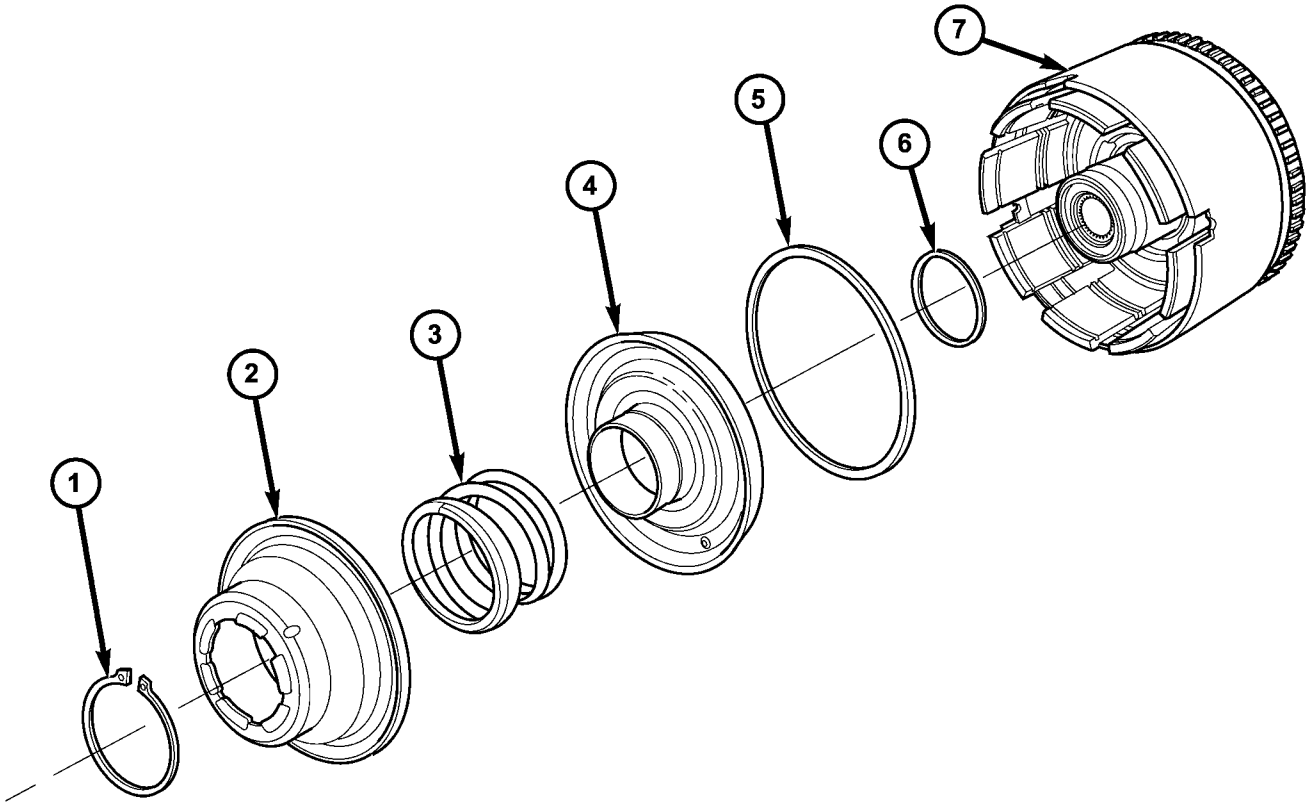

Fig. 218 Underdrive Clutch Piston, Spring and Retainer

1 - SNAP RING
2 - SPRING RETAINER
3 - SPRING
4 - UD CLUTCH PISTON
5 - SEAL, OUTER
6 - SEAL, INNER
7 - INPUT CLUTCH ASSEMBLY

INPUT CLUTCH ASSEMBLY (Continued)

(15) Remove input hub tapered snap ring (Fig. 219) (Fig. 225).

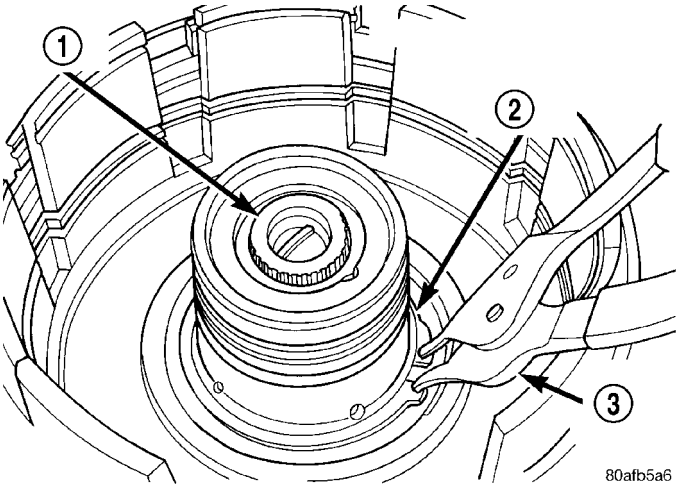

Fig. 219 Input Hub Tapered Snap Ring

1 - INPUT SHAFT
2 - INPUT HUB SNAP RING (TAPERED SIDE UP WITH TABS IN CAVITY)
3 - SNAP RING PLIERS

(16) Tap on input hub with soft faced hammer and separate input hub from OD/Reverse piston and clutch retainer (Fig. 220).

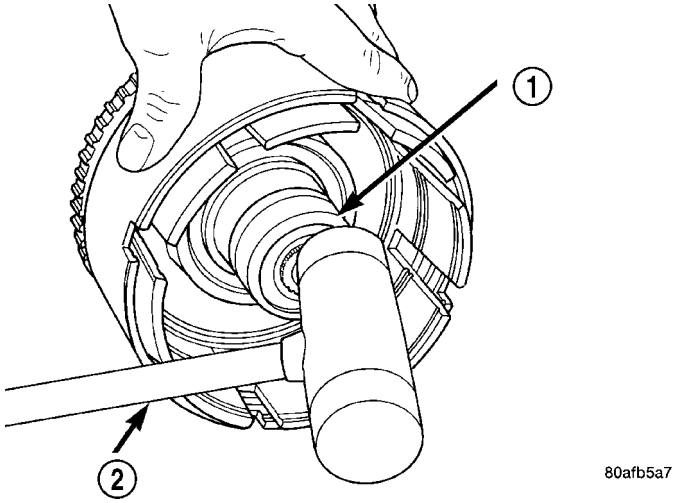

Fig. 220 Tap on Input Hub

1 - INPUT SHAFT AND HUB ASSEMBLY
2 - PLASTIC HAMMER

(17) Separate clutch retainer from OD/Reverse piston (Fig. 221).

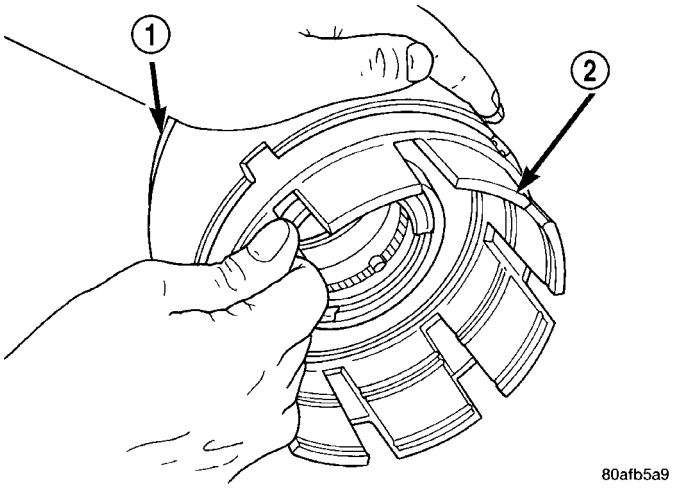

Fig. 221 Pull Retainer from Piston

1 - OVERDRIVE/REVERSE PISTON
2 - INPUT CLUTCHES RETAINER

(18) Using Tool 6057 and an arbor press, compress return OD/Reverse piston return spring just enough to remove snap ring (Fig. 222).

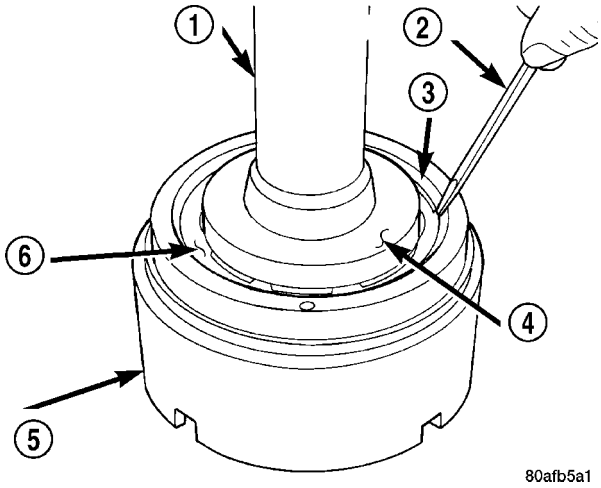

Fig. 222 Remove Snap Ring

1 - ARBOR PRESS RAM (COMPRESS RETURN SPRING JUST ENOUGH TO REMOVE OR INSTALL SNAP RING)
2 - SCREWDRIVER
3 - SNAP RING
4 - SPECIAL TOOL 6057
5 - OD/REVERSE PISTON
6 - RETURN SPRING

INPUT CLUTCH ASSEMBLY (Continued)

(19) Remove input shaft to input clutch hub snap ring (Fig. 223) (Fig. 225).

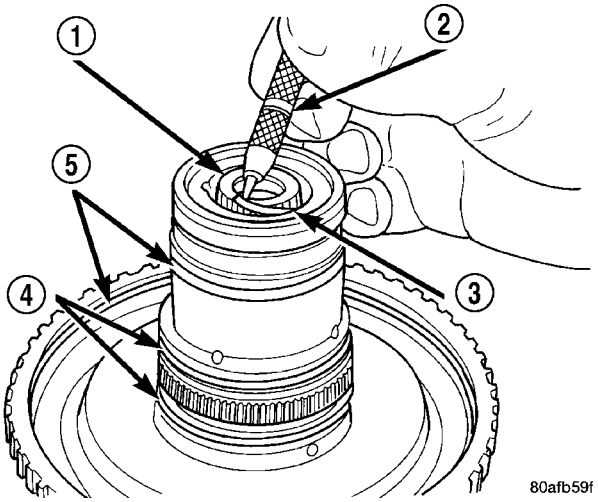

Fig. 223 Remove Input Shaft Snap Ring

1 - INPUT SHAFT
2 - SHARP-POINTED TOOL
3 - SNAP RING
4 - O-RINGS
5 - SEALS

(20) Using a suitably sized socket and an arbor press, remove input shaft from input shaft hub (Fig. 224).

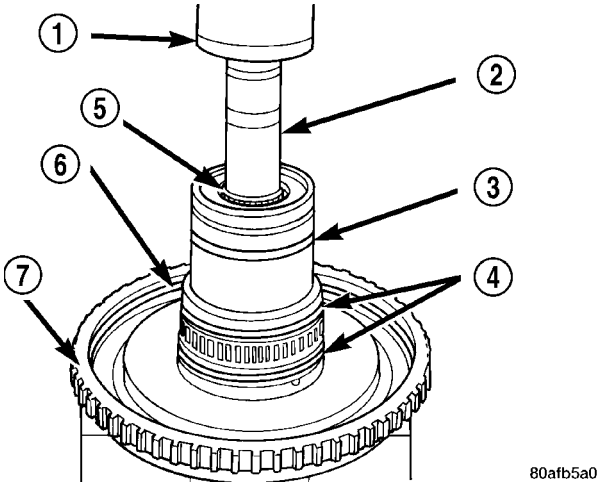

Fig. 224 Remove Input Shaft

1 - ARBOR PRESS RAM
2 - SOCKET
3 - SEAL
4 - O-RINGS
5 - INPUT SHAFT
6 - SEAL
7 - INPUT SHAFT HUB ASSEMBLY

INPUT CLUTCH ASSEMBLY (Continued)

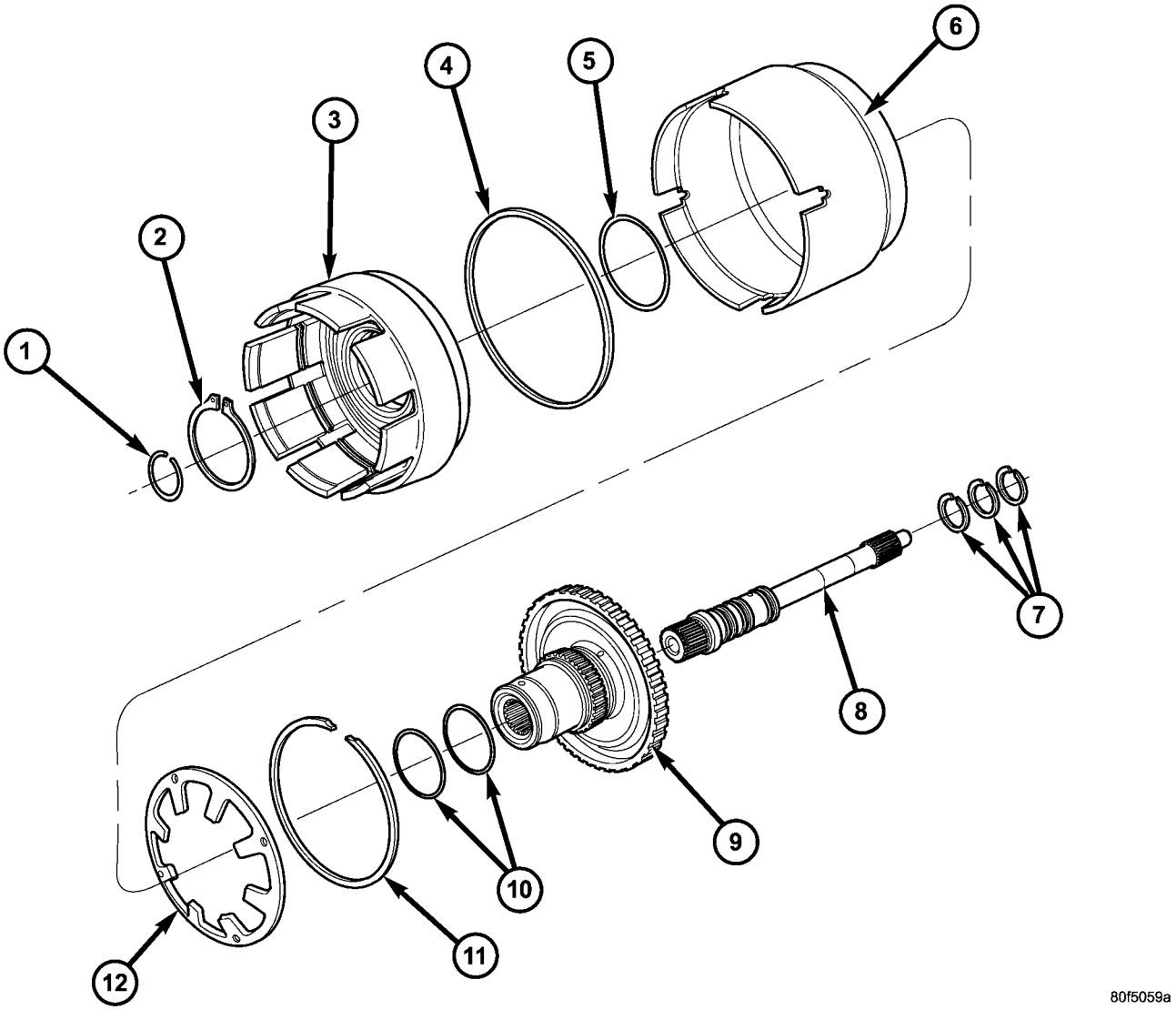

Fig. 225 Input Clutch Hub, Retainer, and OD/Reverse Piston

1 - SNAP RING (INPUT SHAFT)
2 - SNAP RING
3 - CLUTCH RETAINER
4 - SEAL, OUTER
5 - SEAL, INNER
6 - OD/REVERSE PISTON
7 - SEAL, INPUT SHAFT
8 - SHAFT, INPUT
9 - HUB
10 - SEAL
11 - SNAP RING
12 - BELLEVILLE SPRING

INPUT CLUTCH ASSEMBLY (Continued)

ASSEMBLY

Use petrolatum on all seals to ease assembly of components.

(1) Using an arbor press, install input shaft to input shaft hub (Fig. 226).

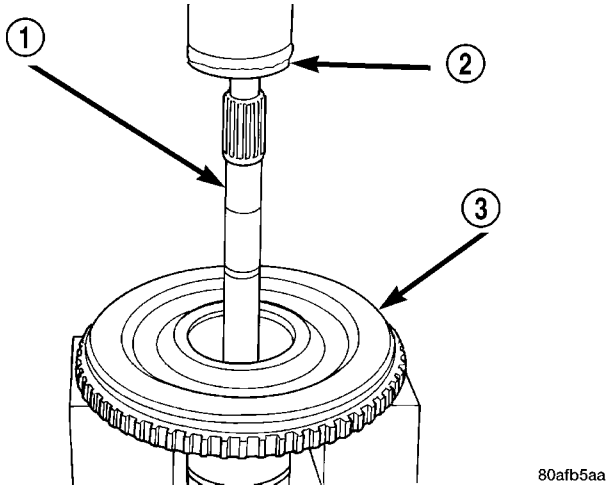

Fig. 226 Install Input Shaft

1 - INPUT SHAFT
2 - ARBOR PRESS RAM
3 - INPUT SHAFT HUB ASSEMBLY

(2) Install input shaft snap ring (Fig. 227).

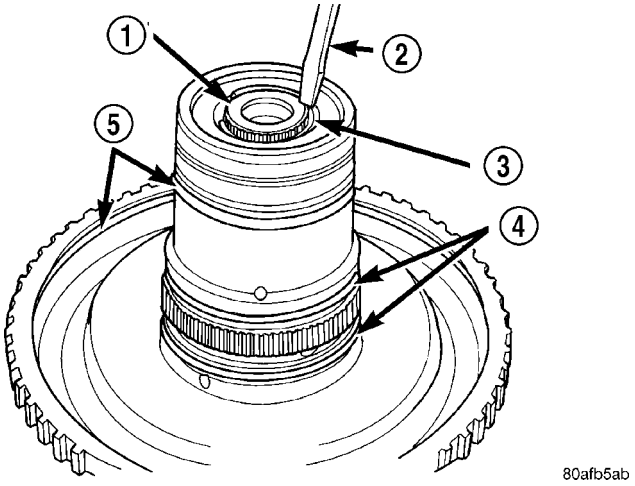

Fig. 227 Install Input Shaft Snap Ring

1 - INPUT SHAFT
2 - SCREWDRIVER (DO NOT SCRATCH BEARING SURFACE)
3 - SNAP RING
4 - O-RINGS
5 - SEALS

(3) Using an arbor press and Tool 6057, Install OD/Reverse piston return spring and snap ring (Fig. 228) (Fig. 229).

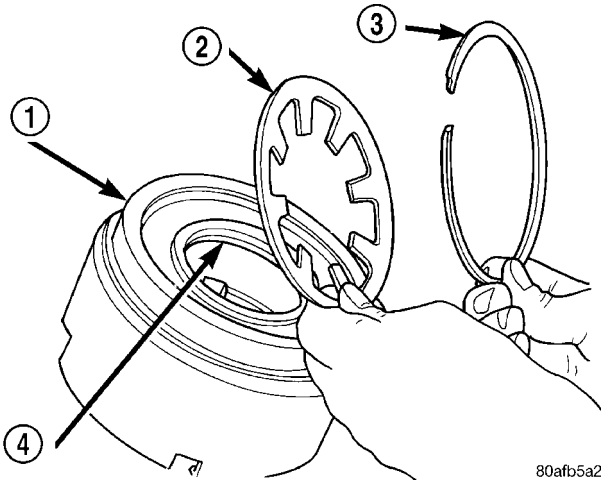

Fig. 228 Return Spring and Snap Ring

1 - OD/REVERSE PISTON
2 - RETURN SPRING
3 - SNAP RING
4 - O-RING

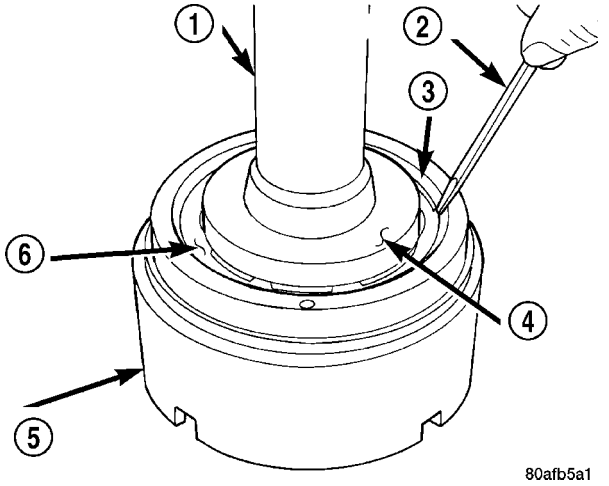

Fig. 229 Install Snap Ring

1 - ARBOR PRESS RAM (COMPRESS RETURN SPRING JUST ENOUGH TO REMOVE OR INSTALL SNAP RING)
2 - SCREWDRIVER
3 - SNAP RING
4 - SPECIAL TOOL 6057
5 - OD/REVERSE PISTON
6 - RETURN SPRING

INPUT CLUTCH ASSEMBLY (Continued)

(4) Install the OD/Reverse piston assembly to the input clutch retainer as shown in (Fig. 230).

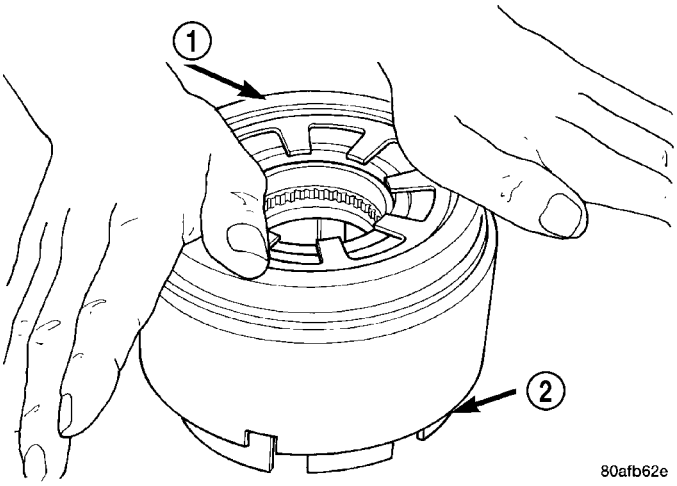

Fig. 230 Install OD/Reverse Piston

1 - PUSH DOWN TO INSTALL OVERDRIVE/REVERSE PISTON
2 - INPUT CLUTCHES RETAINER

(5) Install the input hub/shaft assy. to the OD/Reverse piston/clutch retainer assy. (Fig. 231).

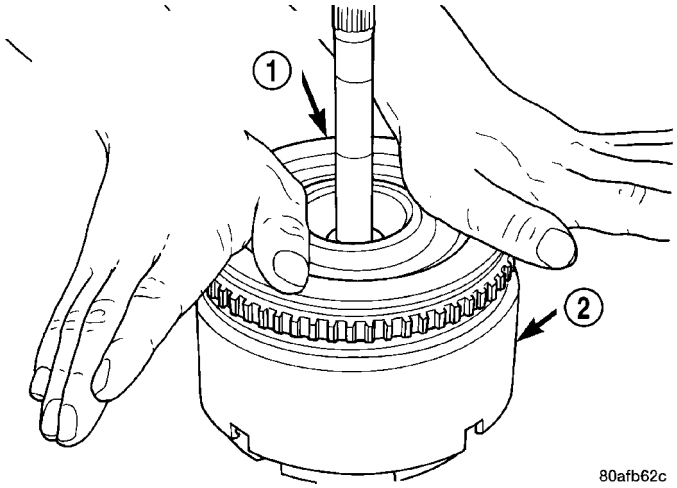

Fig. 231 Install Input Shaft Hub Assembly

1 - PUSH DOWN TO INSTALL INPUT SHAFT HUB ASSEMBLY (ROTATE TO ALIGN SPLINES)
2 - OD/REV. PISTON

(6) Install input hub tapered snap ring (Fig. 232) (Fig. 233).

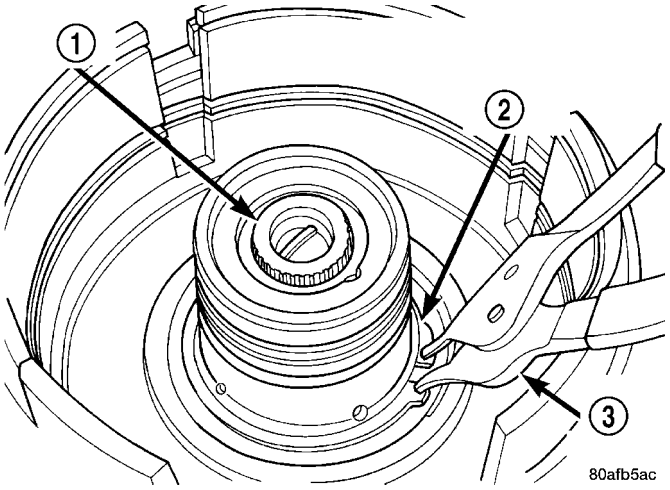

Fig. 232 Install Input Hub Tapered Snap Ring

1 - INPUT SHAFT
2 - INPUT HUB SNAP RING (TAPERED SIDE UP WITH TABS IN CAVITY)
3 - SNAP RING PLIERS

INPUT CLUTCH ASSEMBLY (Continued)

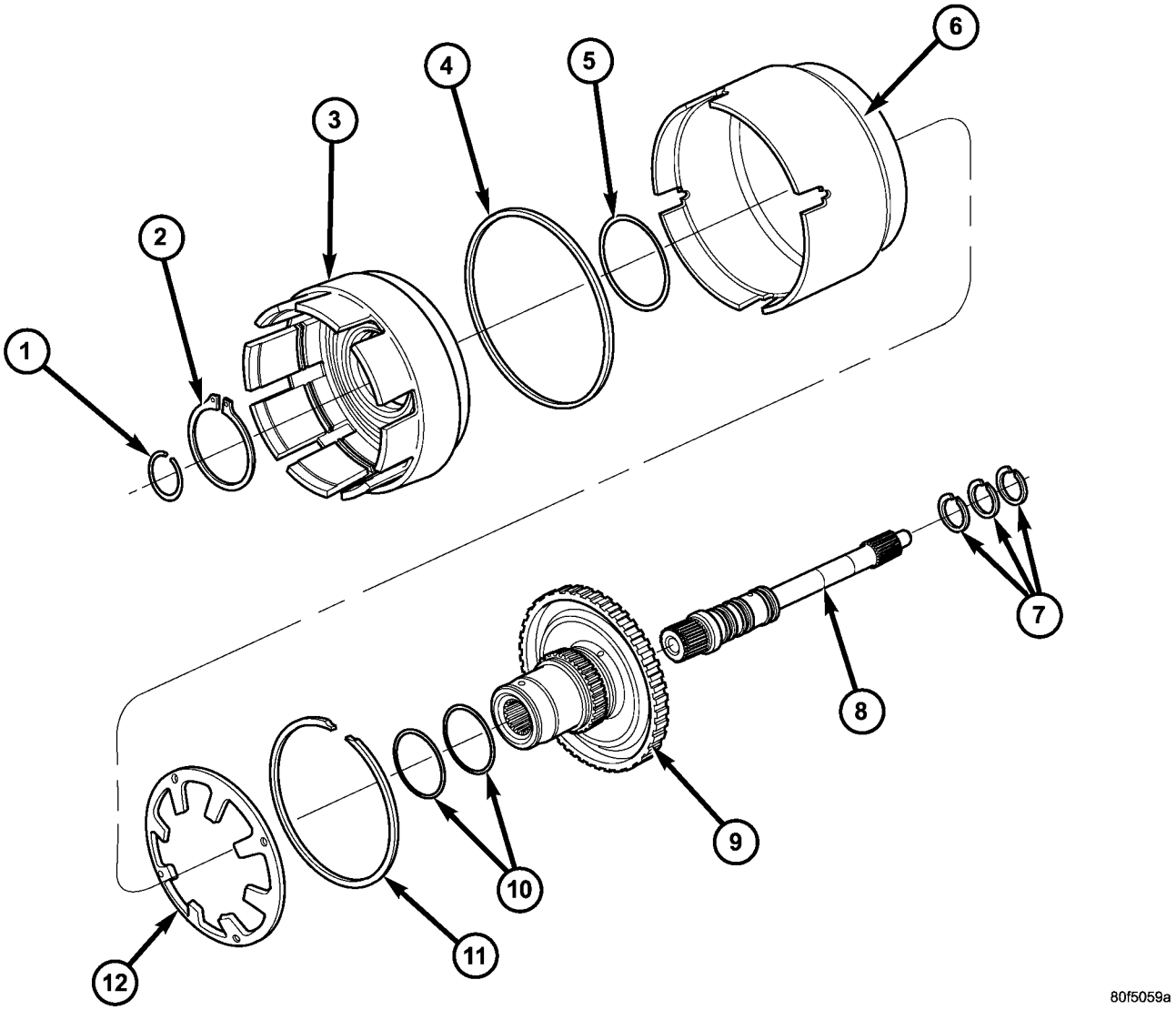

Fig. 233 Input Clutch Hub, Retainer, and OD/Reverse Piston

1 - SNAP RING (INPUT SHAFT)
2 - SNAP RING
3 - CLUTCH RETAINER
4 - SEAL, OUTER
5 - SEAL, INNER
6 - OD/REVERSE PISTON
7 - SEAL, INPUT SHAFT
8 - SHAFT, INPUT
9 - HUB
10 - SEAL
11 - SNAP RING
12 - BELLEVILLE SPRING

INPUT CLUTCH ASSEMBLY (Continued)

(7) Install UD clutch piston (Fig. 234).

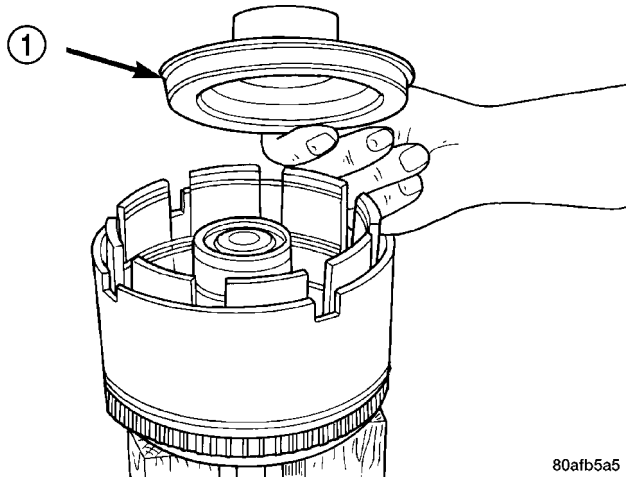

Fig. 234 Underdrive Clutch Piston

1 - PISTON

(8) Install UD piston return spring and Tool 5067 as shown in (Fig. 235).

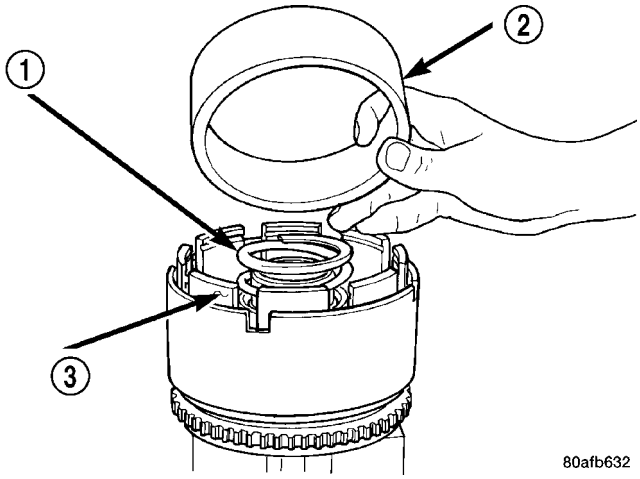

Fig. 235 Seal Compressor Special Tool 5067

1 - PISTON RETURN SPRING
2 - SPECIAL TOOL 5067
3 - INPUT SHAFT CLUTCHES RETAINER ASSEMBLY

(9) Using Tool 5059A and an arbor press, Install the UD spring retainer and snap ring (Fig. 236) (Fig. 237) (Fig. 238) Compress just enough to install snap ring.

CAUTION: Compress return spring just enough to install snap ring.

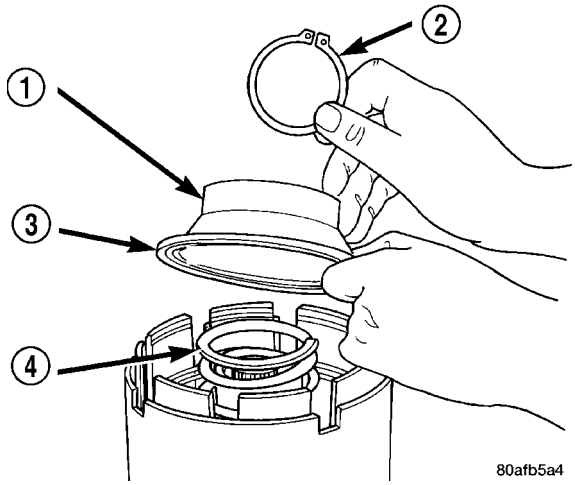

Fig. 236 UD Return Spring and Retainer

1 - UNDERDRIVE SPRING RETAINER
2 - SNAP RING
3 - SEAL
4 - PISTON RETURN SPRING

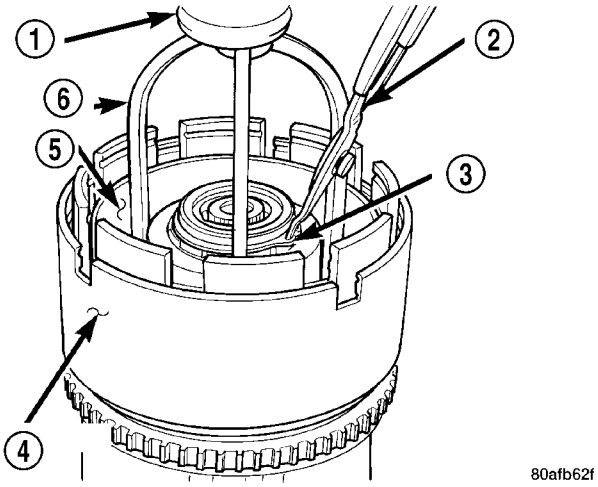

Fig. 237 Install UD Spring Retainer and Snap Ring

1 - ARBOR PRESS RAM
2 - SNAP RING PLIERS
3 - SNAP RING
4 - OD/REVERSE PISTON
5 - TOOL 5067
6 - TOOL 5059A

INPUT CLUTCH ASSEMBLY (Continued)

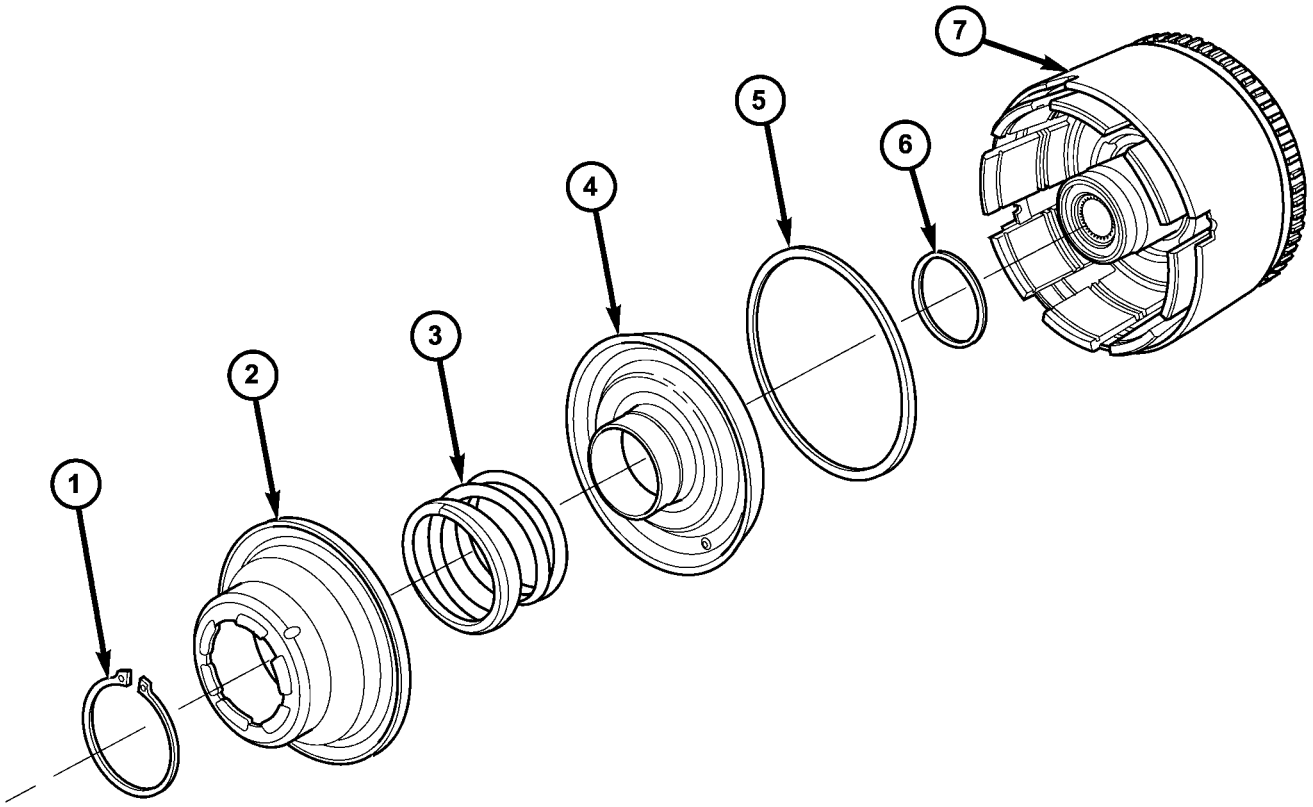

80f503e2

Fig. 238 Underdrive Clutch Piston, Spring and Retainer

1 - SNAP RING
2 - SPRING RETAINER
3 - SPRING
4 - UD CLUTCH PISTON
5 - SEAL, OUTER
6 - SEAL, INNER
7 - INPUT CLUTCH ASSEMBLY

(10) Install the UD clutch pack. Leave out upper disc, until snap ring is installed (Fig. 239).

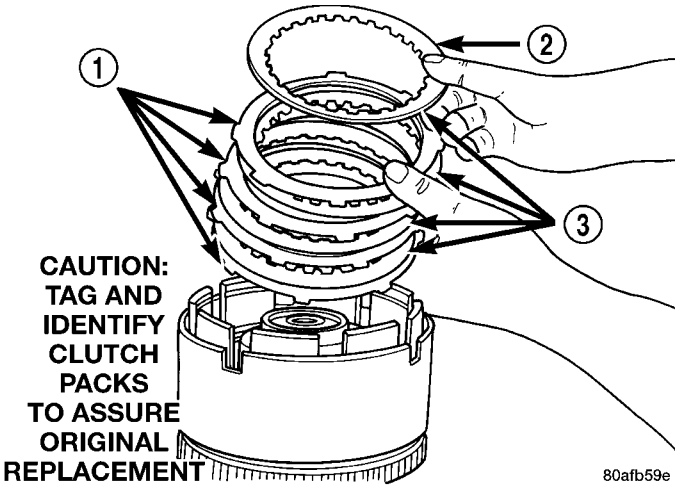

Fig. 239 Underdrive Clutch Pack

1 - CLUTCH PLATE
2 - ONE UD CLUTCH DISC
3 - CLUTCH DISC

INPUT CLUTCH ASSEMBLY (Continued)

(11) Install the UD clutch flat snap ring (Fig. 240).

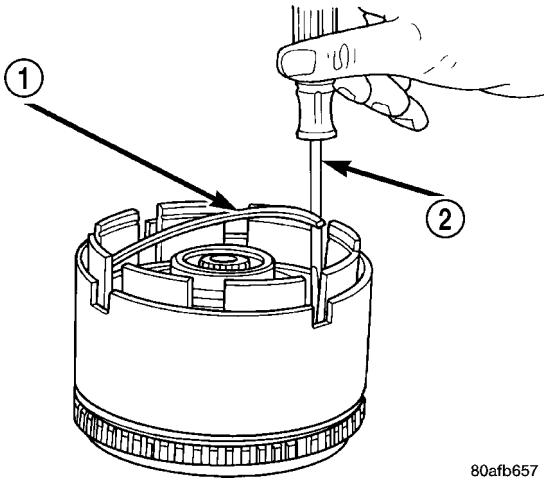

Fig. 240 UD Clutch Flat Snap Ring

1 - UNDERDRIVE CLUTCH REACTION PLATE FLAT SNAP RING
2 - SCREWDRIVER

(12) Install the last UD clutch disc (Fig. 241).

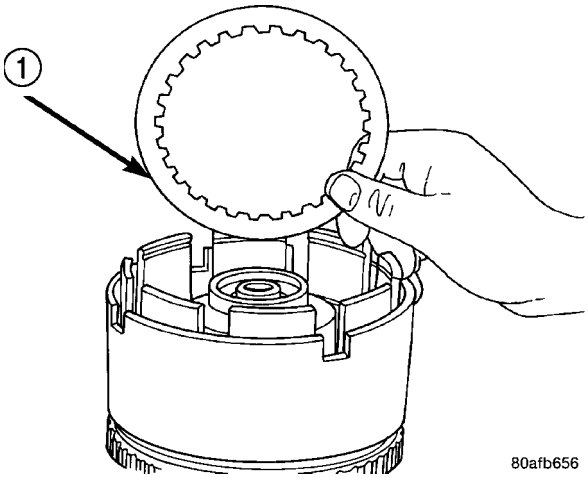

Fig. 241 Install Last UD Clutch Disc

1 - ONE UNDERDRIVE CLUTCH DISC

(13) Install the OD/UD clutch reaction plate and snap ring (Fig. 242) (Fig. 243). The OD/UD clutches reaction plate has a step on both sides. Install the OD/UD clutches reaction plate tapered step side up.

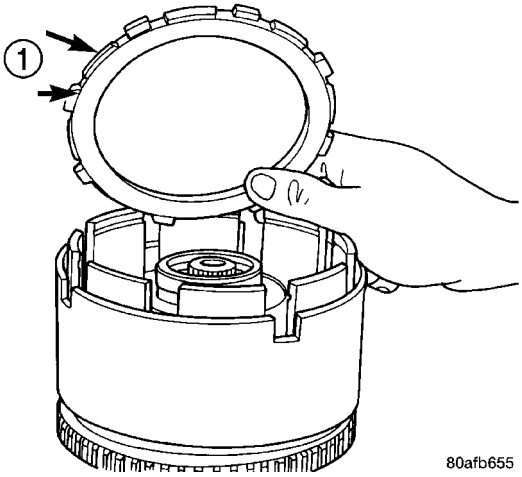

Fig. 242 OD/UD Reaction Plate

1 - OD/UD CLUTCH REACTION PLATE (TAPERED STEP SIDE UP)

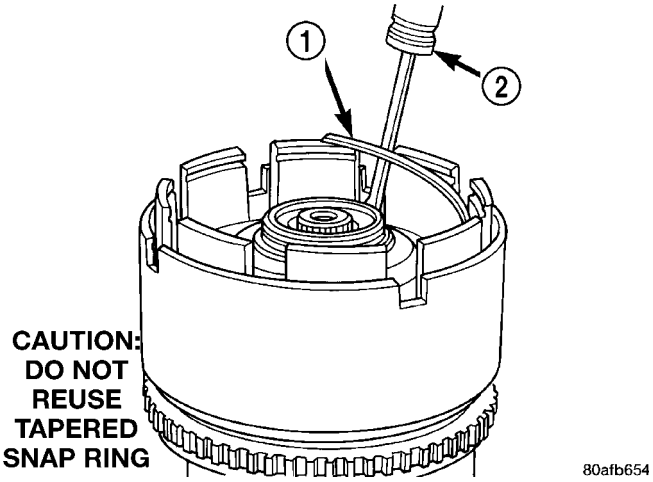

Fig. 243 Tapered Snap Ring

1 - OVERDRIVE/UNDERDRIVE CLUTCHES REACTION PLATE TAPERED SNAP RING
2 - SCREWDRIVER (DO NOT SCRATCH REACTION PLATE)

INPUT CLUTCH ASSEMBLY (Continued)

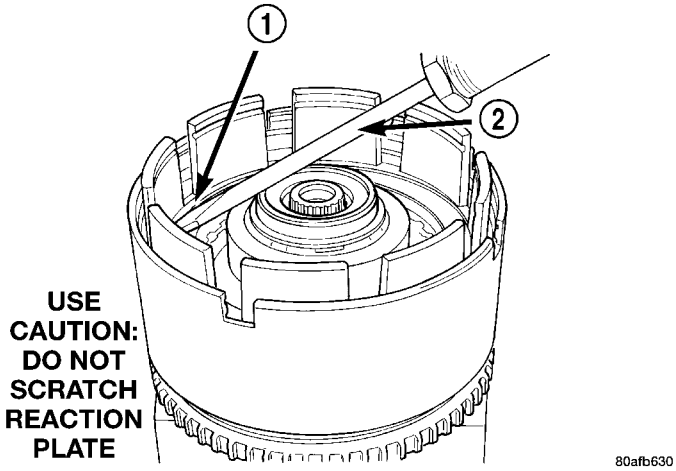

Fig. 244 Seating Tapered Snap Ring

1 - OVERDRIVE/UNDERDRIVE CLUTCHES REACTION PLATE TAPERED SNAP RING
2 - SCREWDRIVER

NOTE: Snap ring ends must be located within one finger of the input clutch hub. Be sure that snap ring is fully seated, by pushing with screwdriver, into snap ring groove all the way around.

(14) Seat tapered snap ring to ensure proper installation (Fig. 244) (Fig. 245).

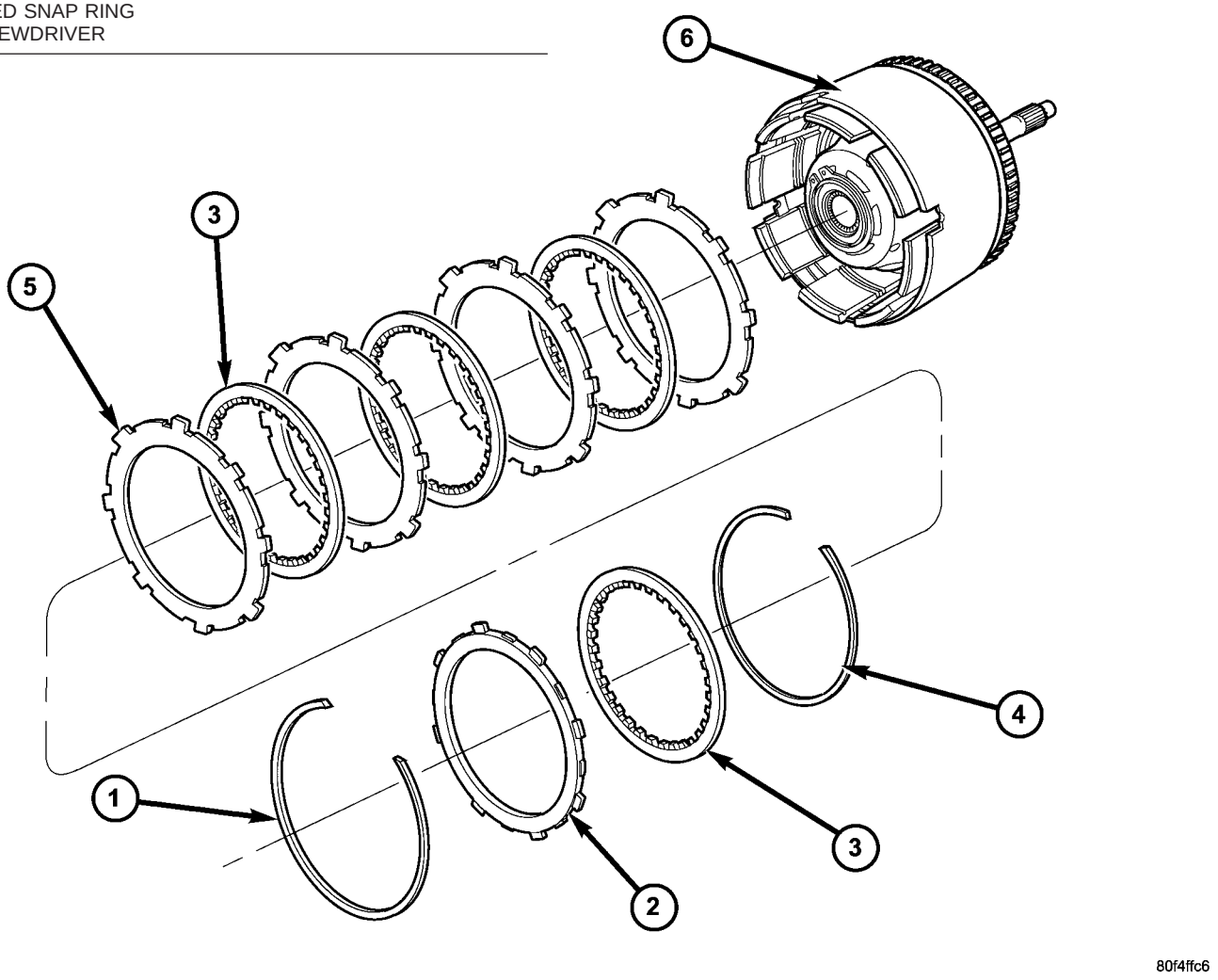

Fig. 245 Underdrive Clutch Assembly

1 - SNAP RING (TAPERED)
2 - OD/UD REACTION PLATE
3 - CLUTCH DISC
4 - SNAP RING (FLAT)
5 - CLUTCH PLATE
6 - INPUT CLUTCH ASSEMBLY

INPUT CLUTCH ASSEMBLY (Continued)

(15) Install input clutch assembly to the Input Clutch Pressure Fixture–Tool 8391 (Fig. 246).

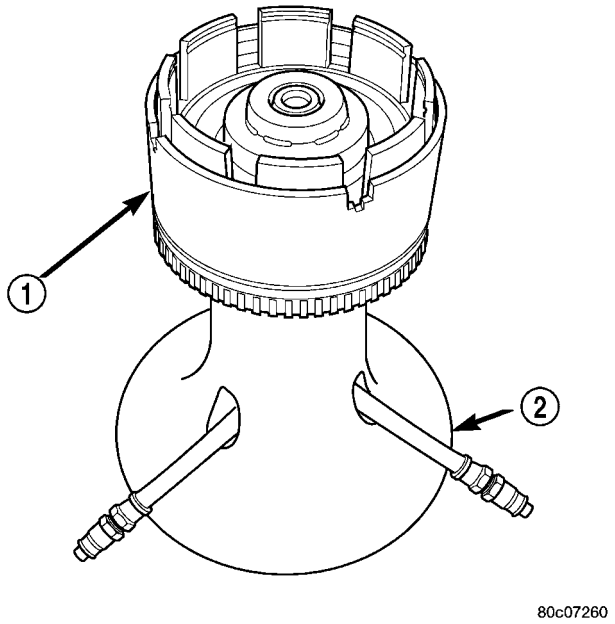

Fig. 246 Input Clutch Assembly on Pressure Fixture Tool 8391

1 - INPUT CLUTCH ASSEMBLY
2 - INPUT CLUTCH PRESSURE FIXTURE 8391

(16) Set up dial indicator on the UD clutch pack as shown in (Fig. 247).

(17) Using moderate pressure, press down and hold (near indicator) the UD clutch pack with screwdriver or suitable tool and zero dial indicator (Fig. 248). When releasing pressure on clutch pack, indicator reading should advance 0.005–0.010.

CAUTION: Do not apply more than 30 psi (206 kPa) to the underdrive clutch pack.

(18) Apply 30 psi (206 kPa) to the underdrive hose on Tool 8391 and measure UD clutch clearance. Measure and record UD clutch pack measurement in four (4) places, 90° apart.

(19) Take average of four measurements and compare with UD clutch pack clearance specification. **Underdrive clutch pack clearance must be 0.94-1.50 mm (0.037-0.059 in.).**

(20) If necessary, select the proper reaction plate to achieve specifications:

UNDERDRIVE REACTION PLATE THICKNESS	
4659939AB	5.837-5.937 mm (0.230-0.234 in.)
4659940AB	6.147-6.248 mm (0.242-0.246 in.)
4659941AB	6.457-6.557 mm (0.254-0.258 in.)

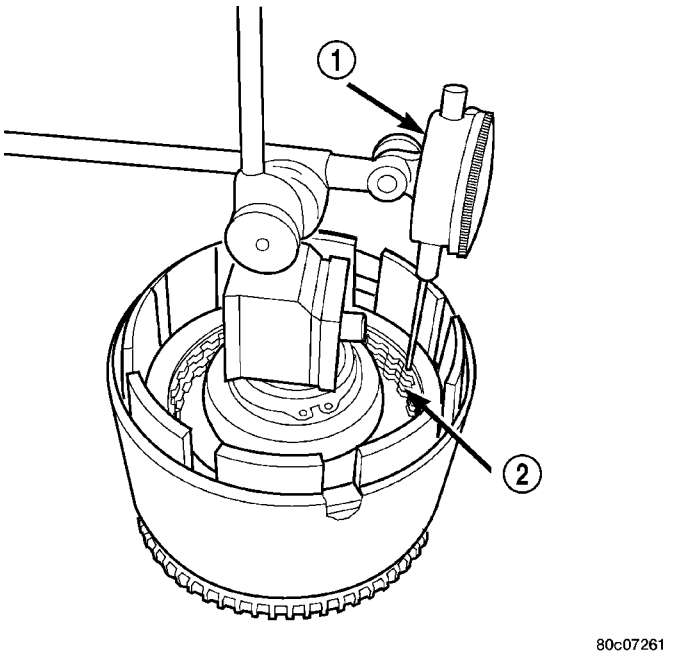

Fig. 247 Set Up Dial Indicator to Measure UD Clutch Clearance

1 - DIAL INDICATOR
2 - UNDERDRIVE CLUTCH

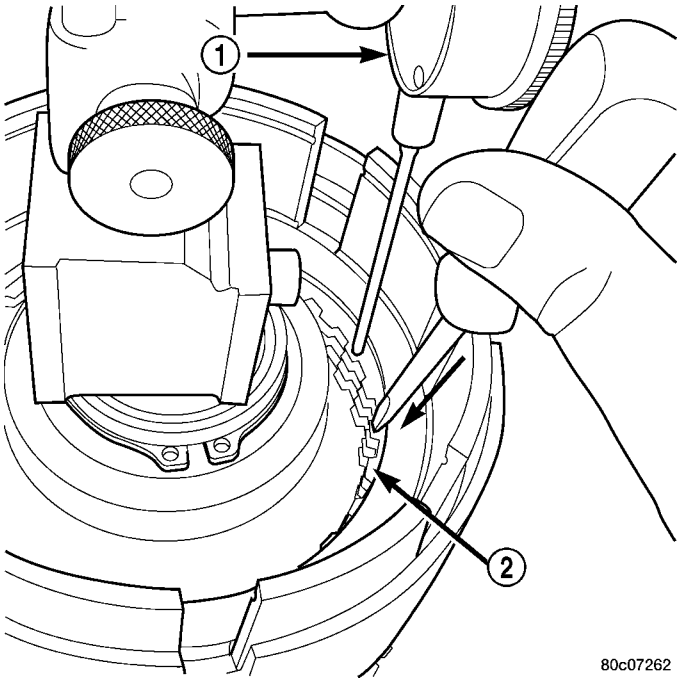

Fig. 248 Press Down on UD Clutch Pack and Zero Dial Indicator

1 - DIAL INDICATOR
2 - UNDERDRIVE CLUTCH

INPUT CLUTCH ASSEMBLY (Continued)

(21) Install the OD clutch pack (four frictions/three steels) (Fig. 249).

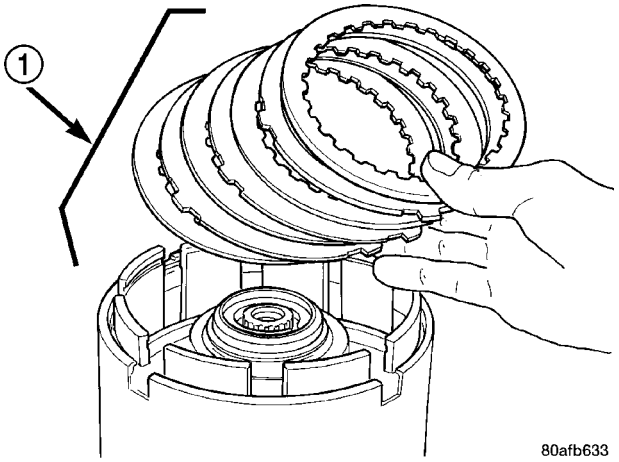

Fig. 249 Install OD Clutch Pack

1 - OVERDRIVE CLUTCH PACK

(22) Install OD pressure plate waved snap ring (Fig. 250).

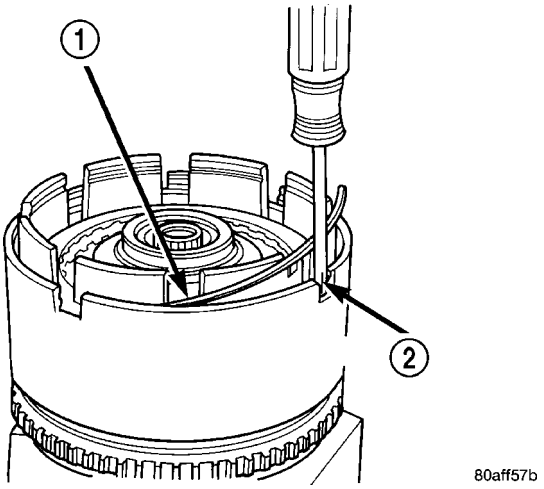

Fig. 250 Install Waved Snap Ring

1 - OVERDRIVE PRESSURE PLATE WAVED SNAP RING
2 - SCREWDRIVER

(23) Install the OD/Reverse pressure plate with large step down (towards OD clutch pack) (Fig. 251).

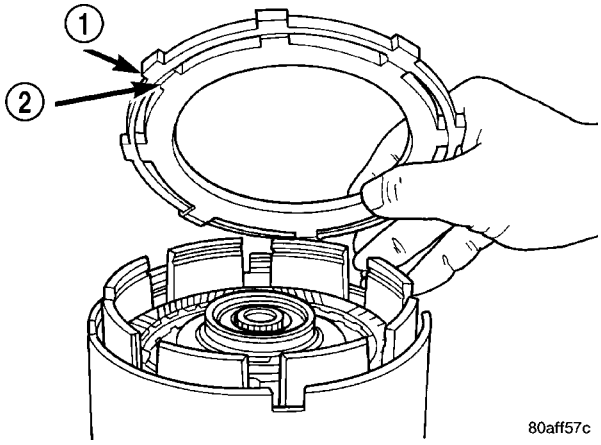

Fig. 251 OD/Reverse Pressure Plate

1 - OVERDRIVE/REVERSE PRESSURE PLATE
2 - (STEP SIDE DOWN)

(24) Install OD pressure plate flat snap ring (Fig. 252) (Fig. 253).

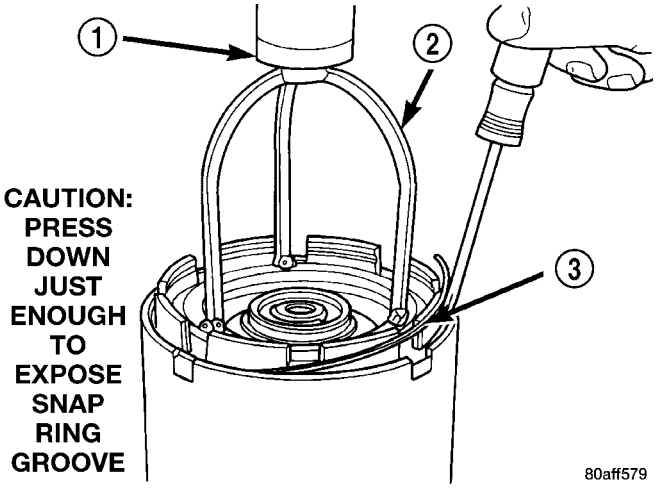

Fig. 252 Install Flat Snap Ring

1 - ARBOR PRESS RAM
2 - TOOL 5059A
3 - FLAT SNAP RING

INPUT CLUTCH ASSEMBLY (Continued)

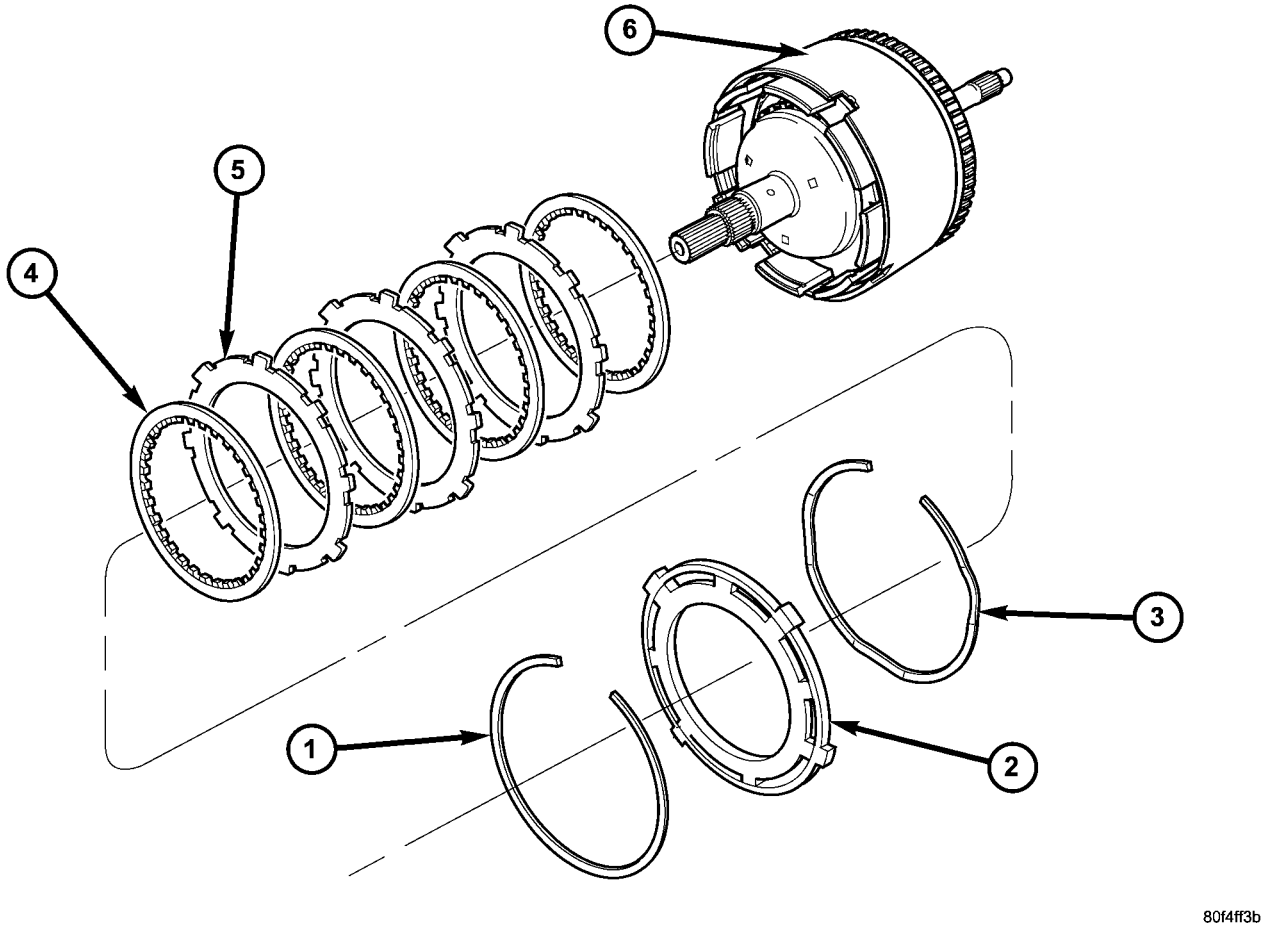

Fig. 253 Overdrive Clutch Assembly

1 - SNAP RING
2 - OD/REVERSE PRESSURE PLATE
3 - SNAP RING (WAVE)
4 - CLUTCH DISC (4)
5 - CLUTCH STEEL (3)
6 - INPUT CLUTCH ASSEMBLY

INPUT CLUTCH ASSEMBLY (Continued)

(25) Measure OD clutch pack clearance. Set up dial indicator on top of the OD/Reverse pressure plate as shown in (Fig. 254).

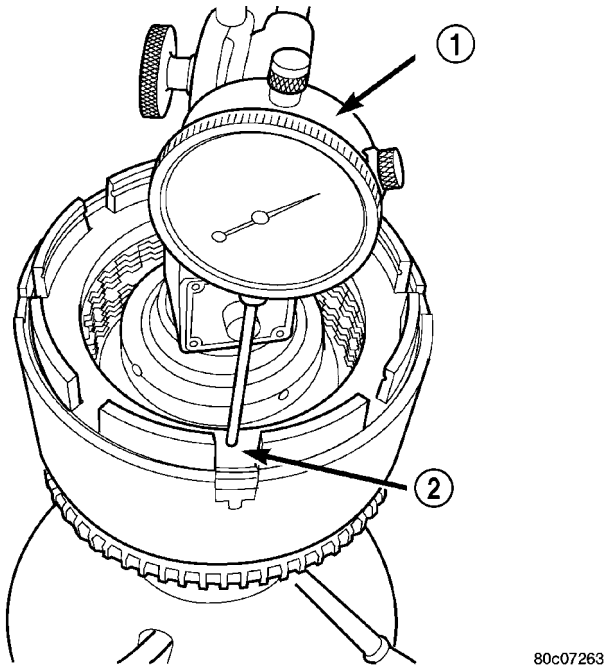

Fig. 254 Measure OD Clutch Pack Clearance

1 - DIAL INDICATOR
2 - OD/REVERSE REACTION PLATE

(26) Zero dial indicator and apply 30 psi (206 kPa) air pressure to the overdrive clutch hose on Tool 8391. Measure and record OD clutch pack measurement in four (4) places, 90° apart.

(27) Take average of four measurements and compare with OD clutch pack clearance specification. **The overdrive (OD) clutch pack clearance is 1.07-3.25 mm (0.042-0.128 in.).**

If not within specifications, the clutch is not assembled properly. There is no adjustment for the OD clutch clearance.

(28) Install reverse clutch pack (two frictions/one steel) (Fig. 255).

(29) Install reverse clutch reaction plate with the flat side down towards reverse clutch (Fig. 256).

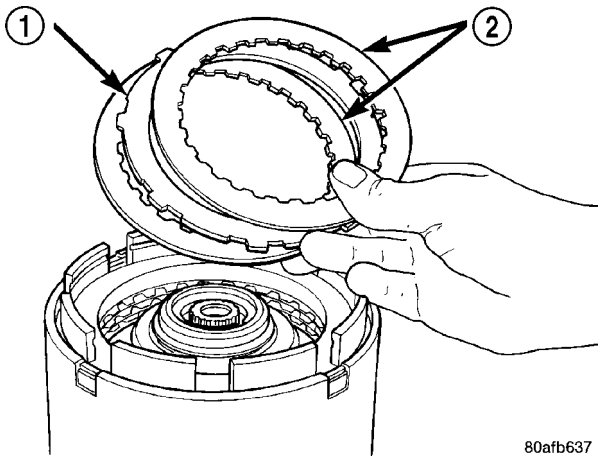

Fig. 255 Install Reverse Clutch Pack

1 - REVERSE CLUTCH PLATE
2 - REVERSE CLUTCH DISCS

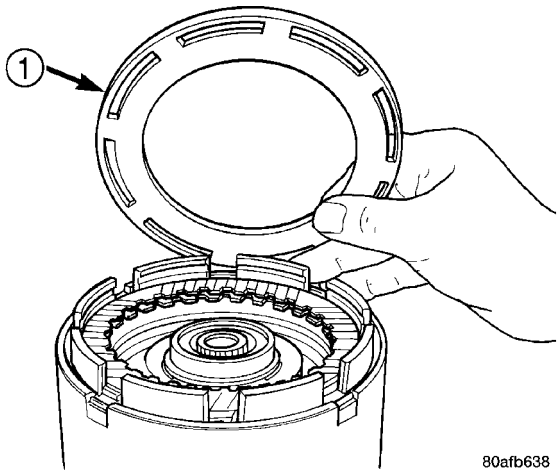

Fig. 256 Install Reaction Plate

1 - REVERSE CLUTCH REACTION PLATE (FLAT SIDE DOWN)

INPUT CLUTCH ASSEMBLY (Continued)

(30) Tap reaction plate down to allow installation of the reverse clutch snap ring. Install reverse clutch snap ring (Fig. 257) (Fig. 258).

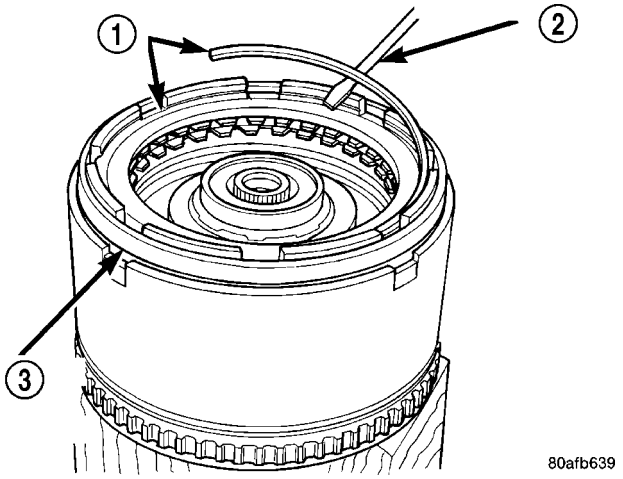

Fig. 257 Install Reverse Clutch Snap Ring

1 - REVERSE CLUTCH SNAP RING (SELECT)
2 - SCREWDRIVER
3 - REVERSE CLUTCH REACTION PLATE

(31) Pry up reverse reaction plate to seat against snap ring (Fig. 259).

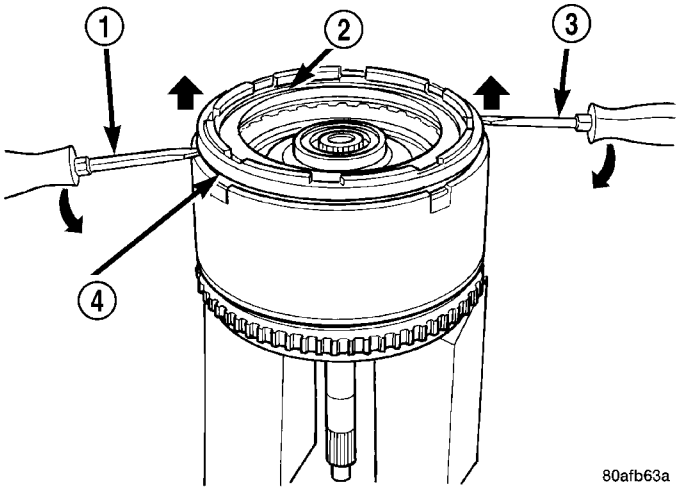

Fig. 259 Pry Up Reaction Plate to Seat Against Snap Ring

1 - SCREWDRIVER
2 - SNAP RING
3 - SCREWDRIVER
4 - MUST RAISE REVERSE REACTION PLATE TO RAISE SNAP RING

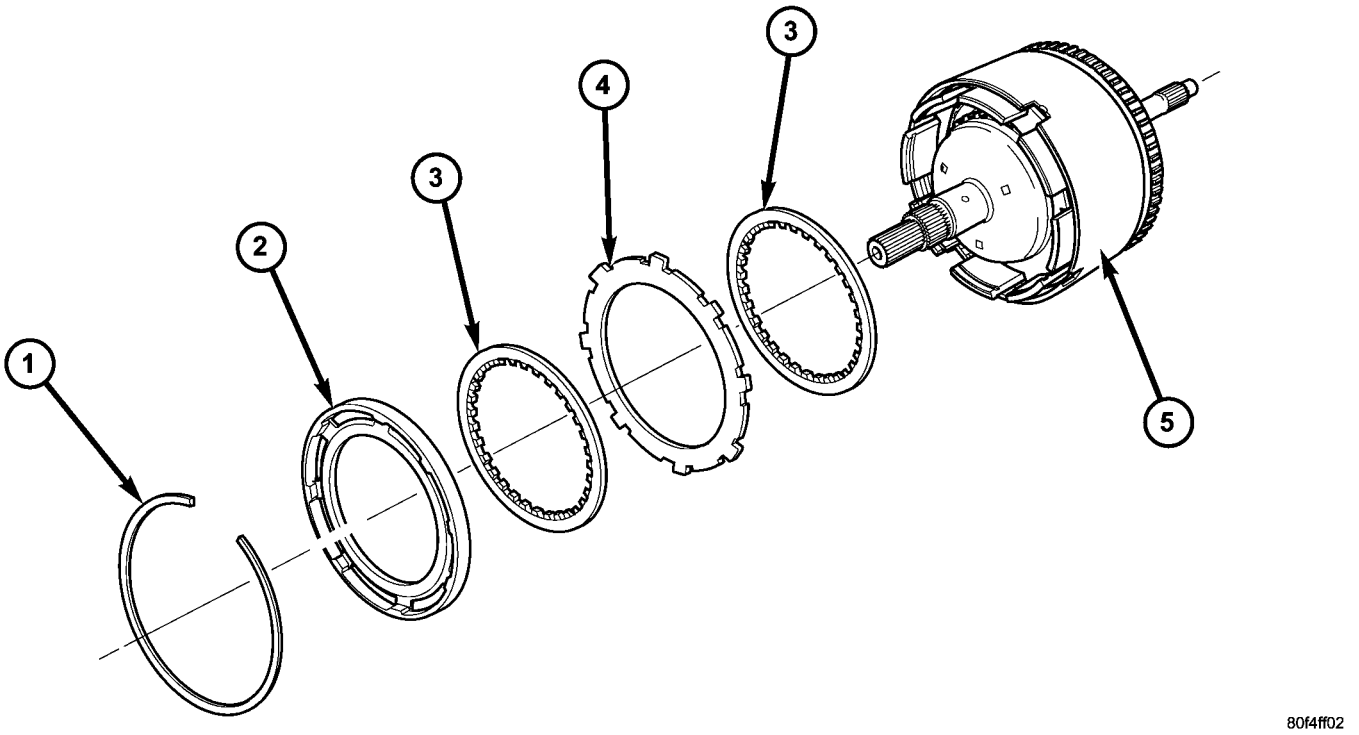

Fig. 258 Reverse Clutch Assembly

1 - SNAP RING
2 - REACTION PLATE
3 - CLUTCH DISC (2)
4 - CLUTCH PLATE (1)
5 - INPUT CLUTCH ASSEMBLY

INPUT CLUTCH ASSEMBLY (Continued)

(32) Set up a dial indicator on the reverse clutch pack as shown in (Fig. 260).

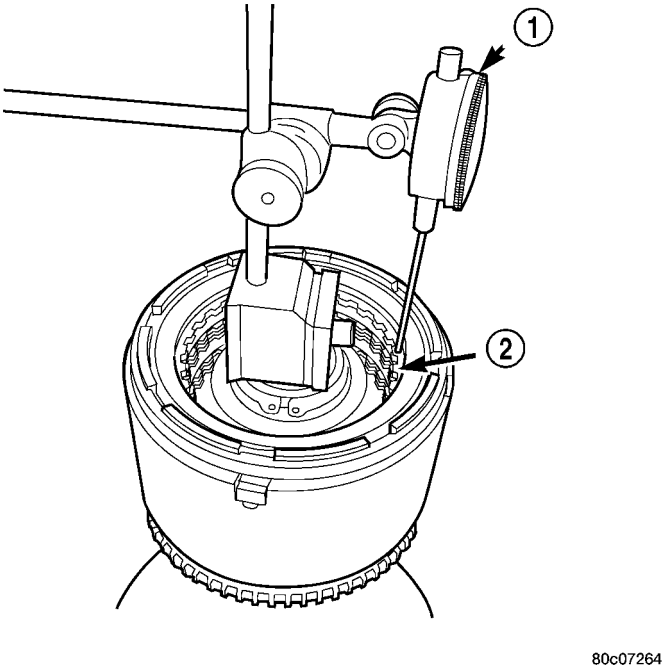

Fig. 260 Measure Reverse Clutch Pack Clearance

1 - DIAL INDICATOR
2 - REVERSE CLUTCH

(33) Using moderate pressure, press down and hold (near indicator) reverse clutch disc with screwdriver or suitable tool and zero dial indicator (Fig. 261). When releasing pressure, indicator should advance 0.005-0.010. as clutch pack relaxes.

(34) Apply 30 psi (206 kPa) air pressure to the reverse clutch hose on Tool 8391. Measure and record reverse clutch pack measurement in four (4) places, 90° apart.

(35) Take average of four measurements and compare with reverse clutch pack clearance specification. **The reverse clutch pack clearance is 0.89-1.37 mm (0.035-0.054 in.).** Select the proper reverse clutch snap ring to achieve specifications:

REVERSE CLUTCH SNAP RING THICKNESS	
4377195	1.53-1.58 mm (0.060-0.062 in.)
4412871	1.77-1.83 mm (0.070-0.072 in.)
4412872	2.02-2.07 mm (0.080-0.082 in.)
4412873	2.27-2.32 mm (0.090-0.091 in.)

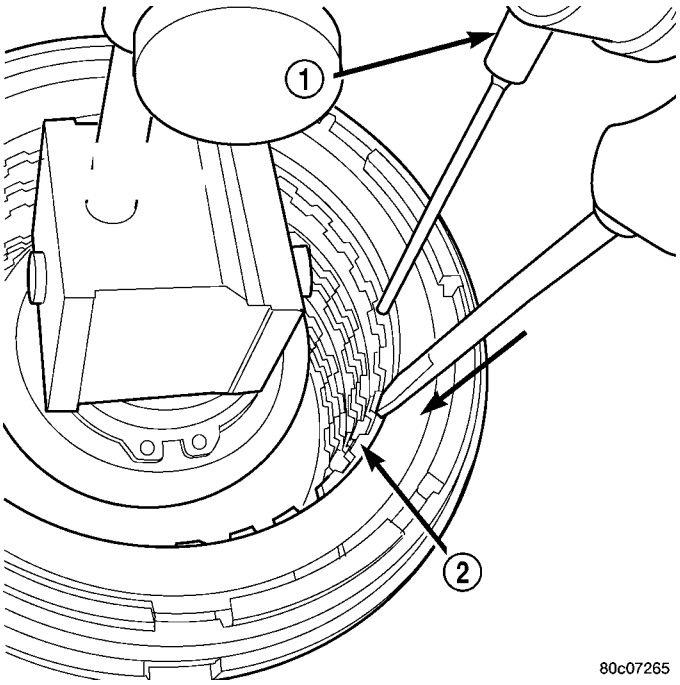

Fig. 261 Press Down on Reverse Clutch and Zero Indicator

1 - DIAL INDICATOR
2 - REVERSE CLUTCH

(36) To complete the assembly, reverse clutch and overdrive clutch must be removed.

(37) Install the #2 needle bearing (Fig. 262).

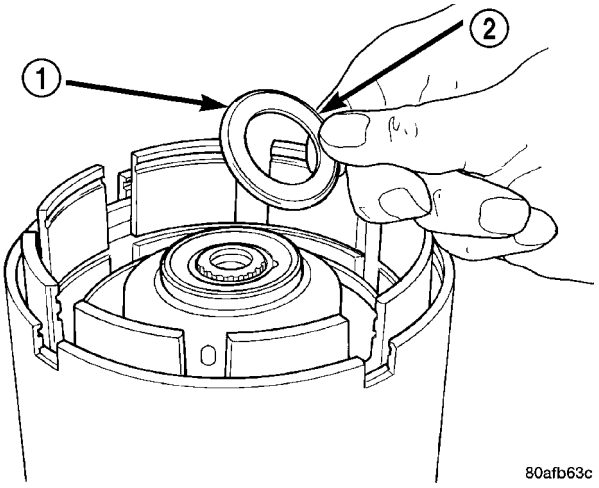

Fig. 262 Install No. 2 Needle Bearing

1 - #2 NEEDLE BEARING (NOTE 3 SMALL TABS)
2 - TABS UP

INPUT CLUTCH ASSEMBLY (Continued)

(38) Install the underdrive shaft assembly (Fig. 263).

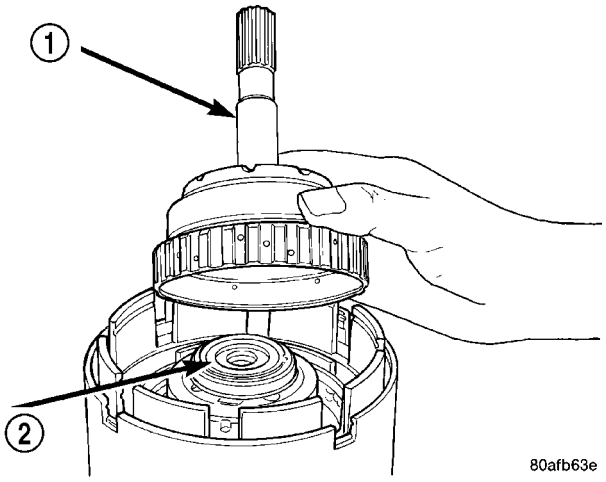

Fig. 263 Install Underdrive Shaft Assembly

1 - UNDERDRIVE SHAFT ASSEMBLY
2 - #2 NEEDLE BEARING

(39) Install the #3 thrust washer to the underdrive shaft assembly. Be sure five tabs are seated properly (Fig. 264).

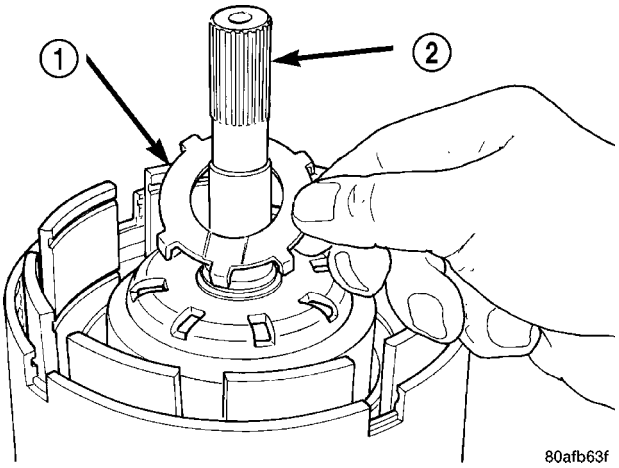

Fig. 264 Install No. 3 Thrust Washer

1 - #3 THRUST WASHER (NOTE 5 TABS)
2 - UNDERDRIVE SHAFT ASSEMBLY

(40) Install the #3 thrust plate to the bottom of the overdrive shaft assembly. Retain with petrolatum or transmission assembly gel (Fig. 265).

(41) Install the overdrive shaft assembly (Fig. 266) (Fig. 267).

(42) Reinstall overdrive and reverse clutch as shown. **Rechecking these clutch clearances is not necessary.**

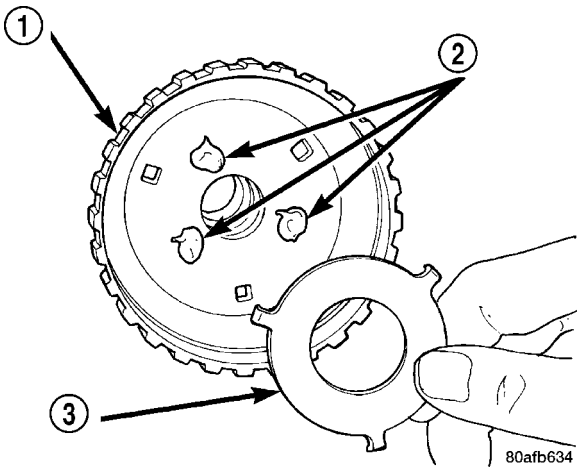

Fig. 265 Install No. 3 Thrust Plate

1 - OVERDRIVE SHAFT ASSEMBLY
2 - DABS OF PETROLATUM (FOR RETENTION)
3 - #3 THRUST PLATE (NOTE 3 TABS)

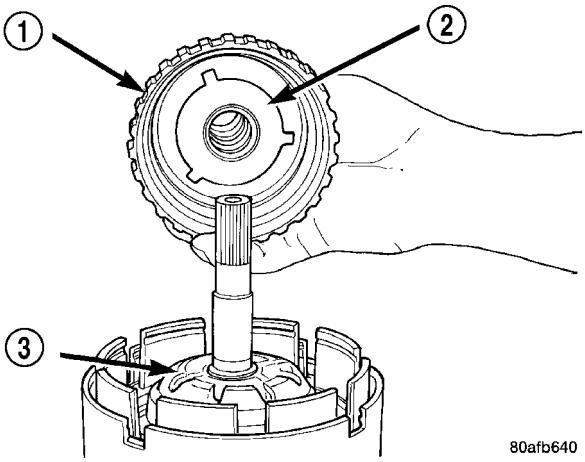

Fig. 266 Install Overdrive Shaft Assembly

1 - OVERDRIVE SHAFT ASSEMBLY
2 - #3 THRUST PLATE
3 - #3 THRUST WASHER

OIL PUMP (Continued)

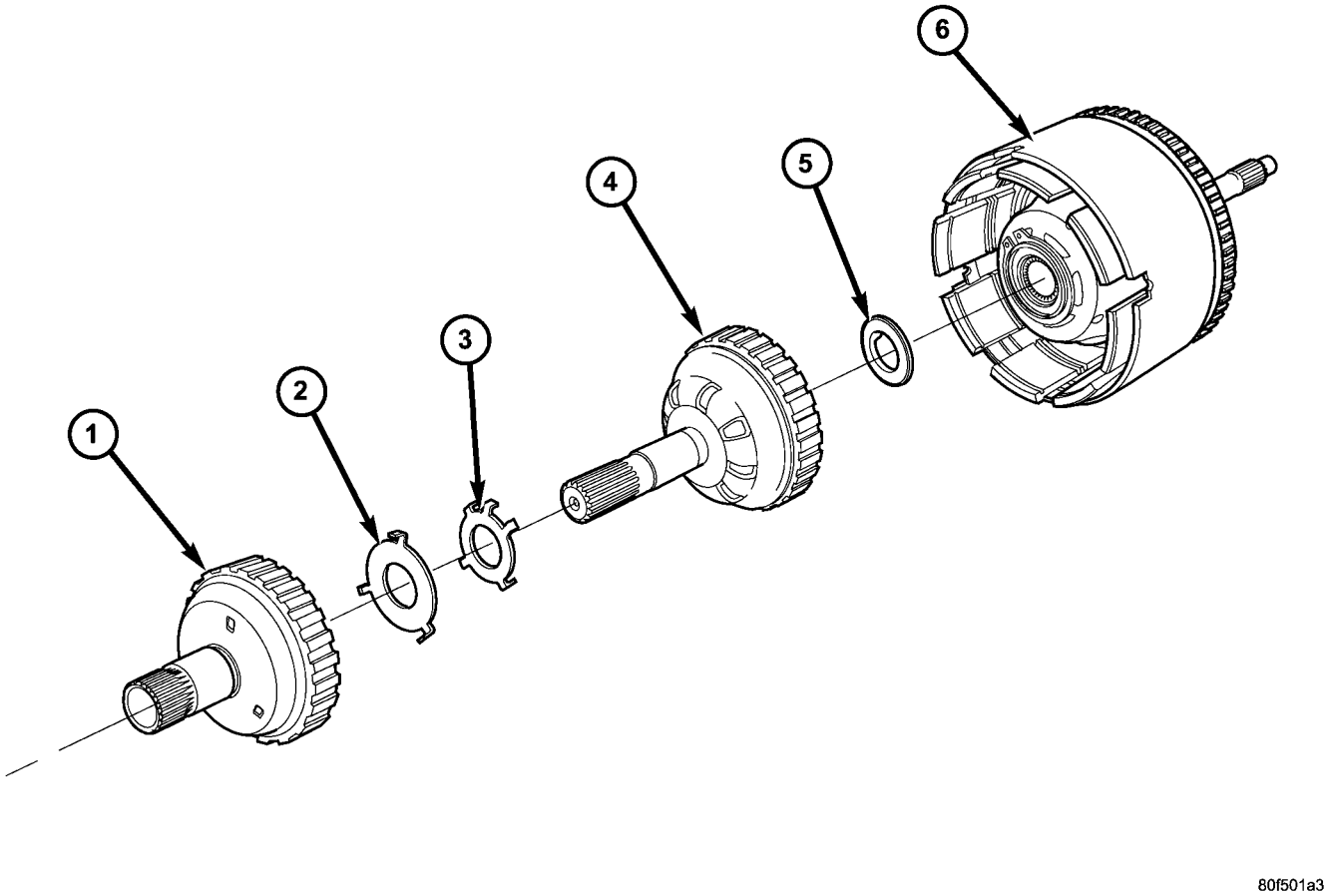

Fig. 267 Overdrive/Underdrive Shafts

1 - OVERDRIVE SHAFT
2 - #3 THRUST PLATE (3 TABS)
3 - #3 THRUST WASHER (5 TABS)
4 - UNDERDRIVE SHAFT
5 - #2 NEEDLE BEARING (3 TABS)
6 - INPUT CLUTCH ASSEMBLY

OIL PUMP

DESCRIPTION

The oil pump is located in the pump housing inside the bell housing of the transaxle case (Fig. 268). The oil pump consists of an inner and outer gear, a housing, and a cover that also serves as the reaction shaft support.

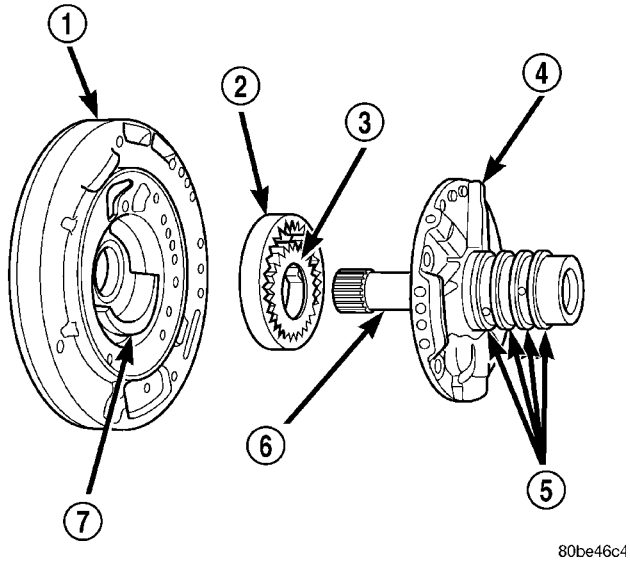

Fig. 268 Oil Pump Assembly

1 - PUMP HOUSING
2 - OUTER PUMP GEAR
3 - INNER PUMP GEAR
4 - REACTION SHAFT SUPPORT
5 - SEAL RINGS (4)
6 - REACTION SHAFT
7 - CRESCENT

OPERATION

As the torque converter rotates, the converter hub rotates the inner and outer gears. As the gears rotate, the clearance between the gear teeth increases in the crescent area, and creates a suction at the inlet side of the pump. This suction draws fluid through the pump inlet from the oil pan. As the clearance between the gear teeth in the crescent area decreases, it forces pressurized fluid into the pump outlet and to the valve body.

DISASSEMBLY

When disassembling the transaxle it is necessary to inspect the oil pump for wear and damage.

(1) Remove the reaction shaft support bolts.

(2) Remove reaction shaft support from pump housing (Fig. 269).

(3) Remove the pump gears (Fig. 270) and check for wear and damage on pump housing and gears.

(4) Re-install the gears and check clearances.

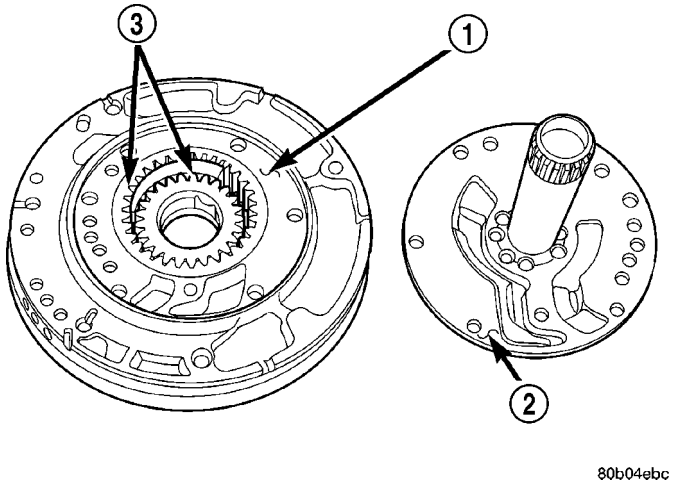

Fig. 269 Reaction Shaft Support

1 - PUMP HOUSING
2 - REACTION SHAFT SUPPORT
3 - PUMP GEARS

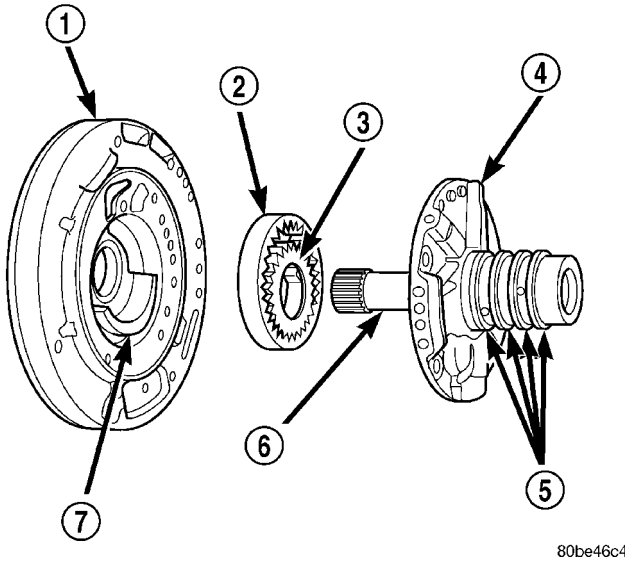

Fig. 270 Oil Pump Assembly

1 - PUMP HOUSING
2 - OUTER PUMP GEAR
3 - INNER PUMP GEAR
4 - REACTION SHAFT SUPPORT
5 - SEAL RINGS (4)
6 - REACTION SHAFT
7 - CRESCENT

(5) Measure the clearance between the outer gear and the pump pocket (Fig. 271). Clearance should be 0.089–0.202 mm (0.0035-0.0079 in.).

(6) Measure clearance between outer gear and crescent. Clearance should be 0.060-0.298 mm (0.0023-0.0117 in.).

(7) Measure clearance between inner gear and crescent. Clearance should be 0.093-0.385 mm (0.0036-0.0151 in.).

OIL PUMP (Continued)

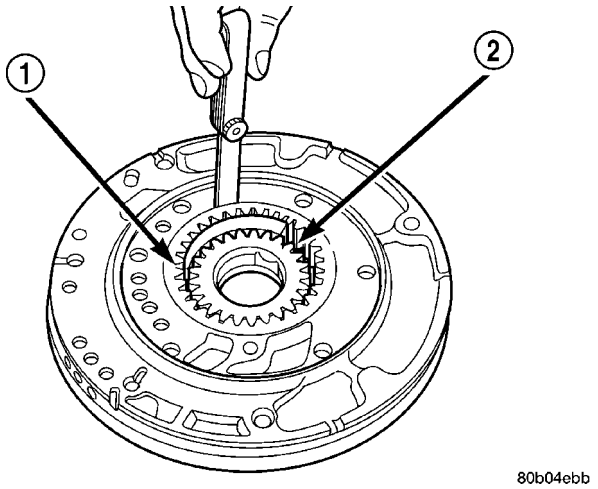

Fig. 271 Measure Outer Gear to Pocket

1 - OUTER GEAR
2 - POCKET

(8) Position an appropriate piece of Plastigage across both pump gears.

(9) Align the Plastigage to a flat area on the reaction shaft support housing.

(10) Install the reaction shaft to the pump housing. Tighten the bolts to 27 N·m (20 ft. lbs.).

(11) Remove bolts and carefully separate the housings. Measure the Plastigage following the instructions supplied.

(12) Clearance between outer gear side and the reaction shaft support should be 0.020-0.046 mm (0.0008-0.0018 in.). Clearance between inner gear side and the reaction shaft support should be 0.020-0.046 mm (0.0008-0.0018 in.).

ASSEMBLY

(1) Assemble oil pump as shown in (Fig. 272)

(2) Install and torque reaction shaft support-to-oil pump housing bolts to 28 N·m (20 ft. lbs.) torque.

PLANETARY GEARTRAIN

DESCRIPTION

The planetary geartrain is located between the input clutch assembly and the rear of the transaxle case. The planetary geartrain consists of two sun gears, two planetary carriers, two annulus (ring) gears, and one output shaft (Fig. 273).

OPERATION

The planetary geartrain utilizes two planetary gear sets that connect the transmission input shaft to the output shaft. Input and holding clutches drive or lock different planetary members to change output ratio or direction.

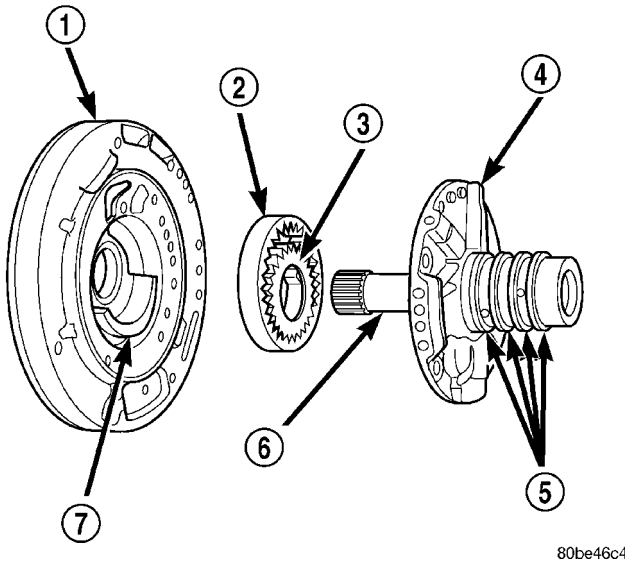

Fig. 272 Oil Pump Assembly

1 - PUMP HOUSING
2 - OUTER PUMP GEAR
3 - INNER PUMP GEAR
4 - REACTION SHAFT SUPPORT
5 - SEAL RINGS (4)
6 - REACTION SHAFT
7 - CRESCENT

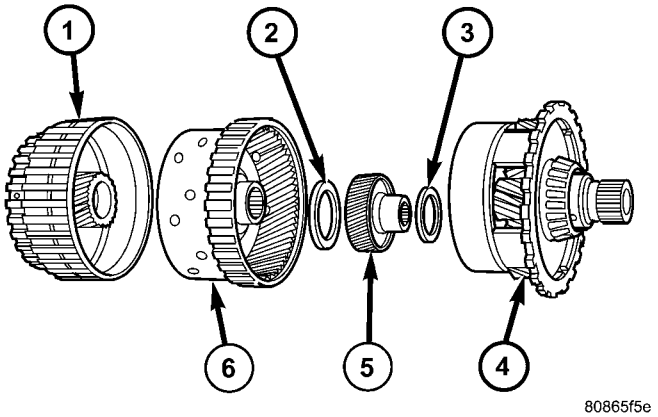

Fig. 273 Planetary Geartrain

1 - FRONT SUN GEAR ASSEMBLY
2 - #6 THRUST BEARING
3 - #7 THRUST BEARING
4 - REAR CARRIER/FRONT ANNULUS ASSEMBLY
5 - REAR SUN GEAR
6 - FRONT CARRIER/REAR ANNULUS ASSEMBLY

SEAL - OIL PUMP

REMOVAL

(1) Remove transaxle from vehicle (Refer to 21 - TRANSMISSION/TRANSAXLE/AUTOMATIC - 41TE - REMOVAL).

(2) Using Tool C-3981-B, remove oil pump seal (Fig. 274).

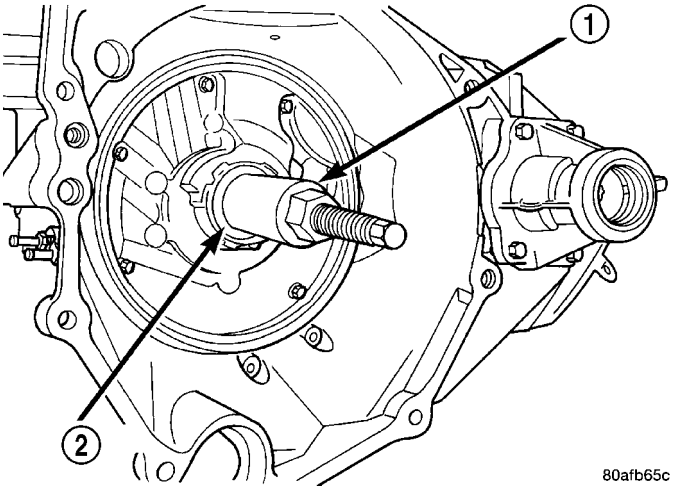

Fig. 274 Remove Oil Pump Seal

1 - TOOL C-3981–B
2 - OIL PUMP SEAL

INSTALLATION

(1) Using Tool C-4193, install oil pump seal (Fig. 275).

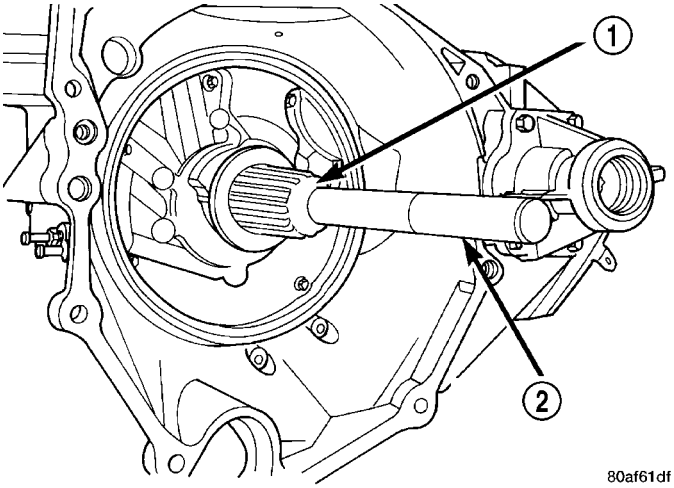

Fig. 275 Install Oil Pump Seal

1 - TOOL C-4193
2 - HANDLE TOOL C-4171

(2) Install transaxle to vehicle (Refer to 21 - TRANSMISSION/TRANSAXLE/AUTOMATIC - 41TE - INSTALLATION).

SHIFT INTERLOCK CABLE

REMOVAL

(1) Disconnect the battery negative cable.

(2) Loosen set screw and remove knob from shifter handle (Fig. 276) .

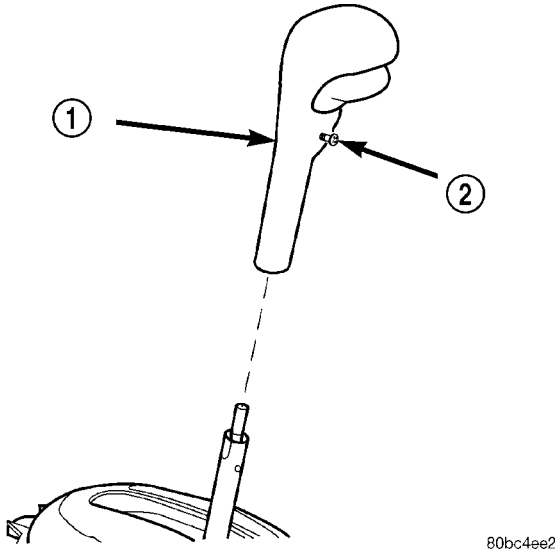

Fig. 276 Gearshift Knob Removal/Installation

1 - SHIFTER KNOB
2 - SET SCREW

(3) Remove the center console assembly as shown in (Fig. 277) .

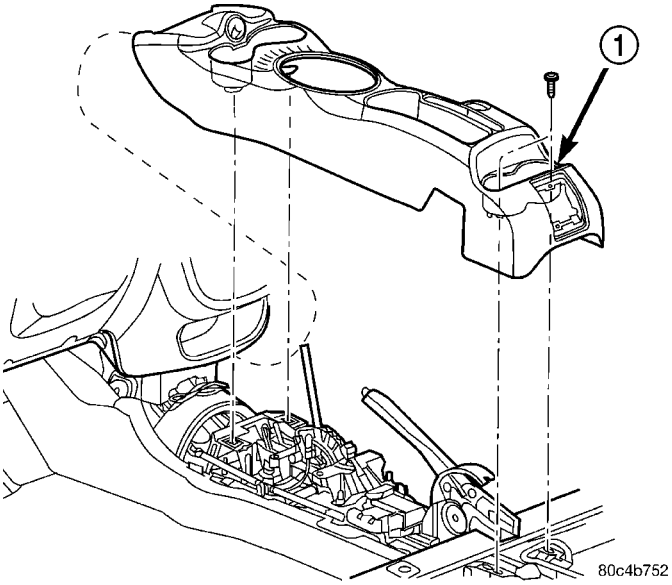

Fig. 277 Center Console Removal/Installation

1 - CENTER CONSOLE

SHIFT INTERLOCK CABLE (Continued)

(4) Remove shifter bezel (Fig. 278) .

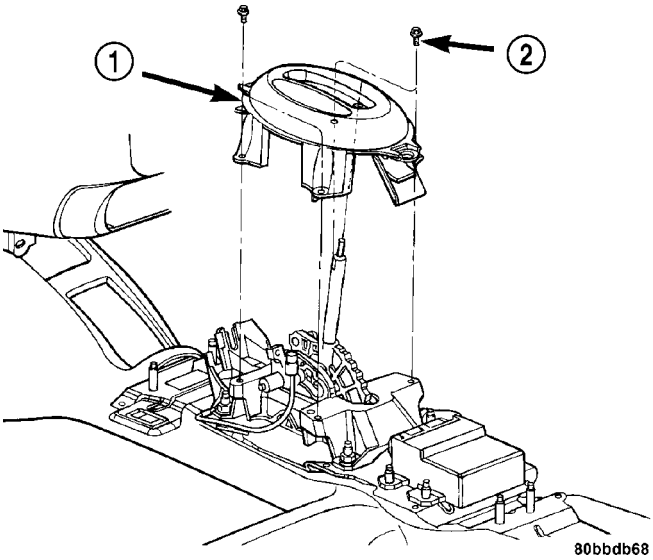

Fig. 278 Shifter Bezel Removal/Installation

1 - BEZEL
2 - SCREW (4)

(5) Disconnect the shifter/ignition interlock cable from the shifter lever and bracket as shown in (Fig. 279) . Remove the cable core end from the plastic cam of the shifter mechanism and release cable from shifter bracket

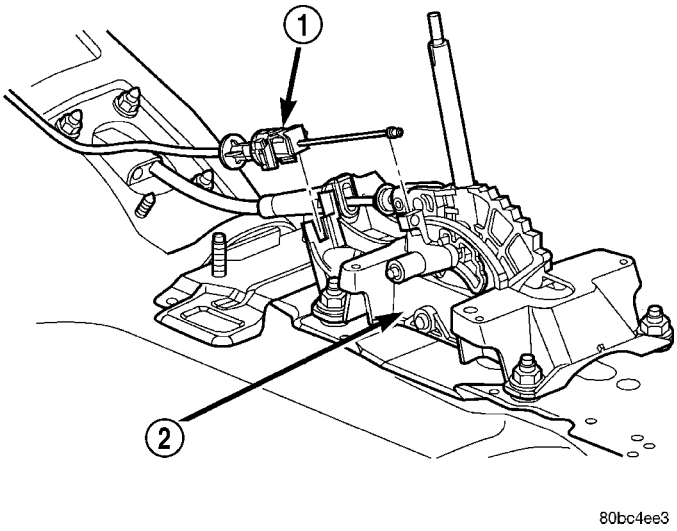

Fig. 279 Interlock Cable at Shifter Assembly

1 - INTERLOCK CABLE
2 - SHIFTER ASSEMBLY

(6) Remove the steering column lower cover (Fig. 280) .

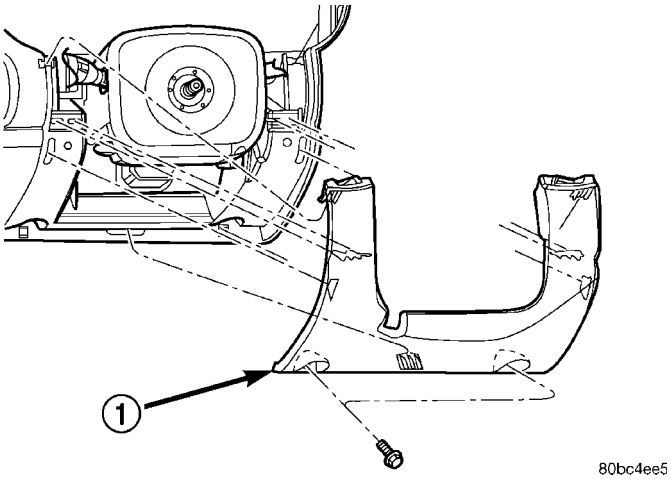

Fig. 280 Steering Column Lower Cover

1 - LOWER COVER

(7) Remove the steering column upper and lower shrouds (Fig. 281) .

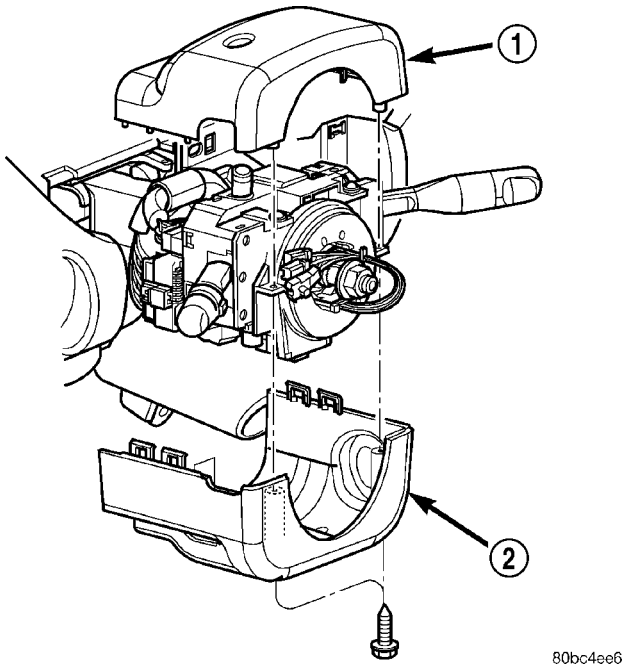

Fig. 281 Steering Column Shrouds

1 - UPPER SHROUD
2 - LOWER SHROUD

SHIFT INTERLOCK CABLE (Continued)

(8) Disconnect the Brake/Transmission Shift Interlock (BTSI) solenoid connector from the interlock cable (Fig. 282) .

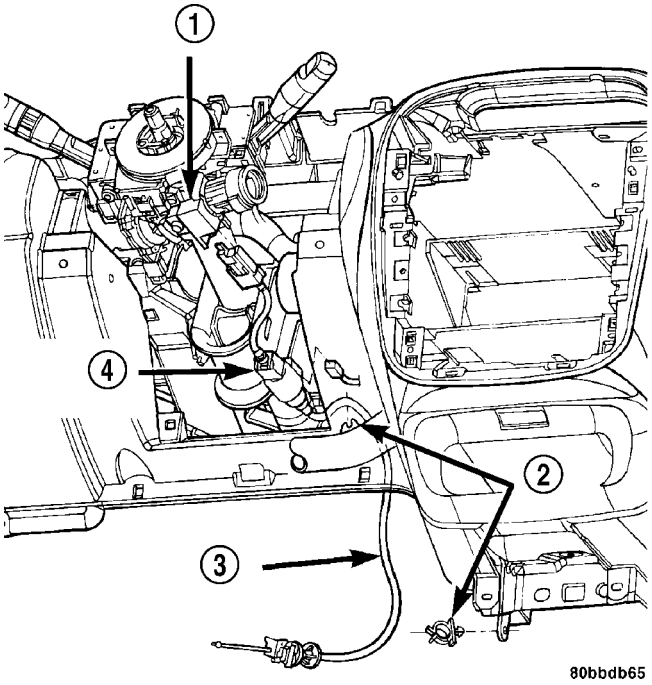

Fig. 282 Interlock Cable at Steering Column-Typical

1 - IGNITION SWITCH
2 - CLIP
3 - INTERLOCK CABLE
4 - BTSI SOLENOID

(9) Rotate the ignition key to the “OFF” or “ON/RUN” position (Fig. 283) .

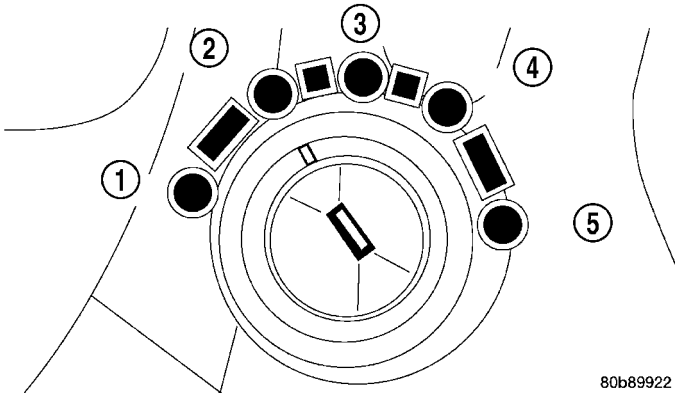

Fig. 283 Ignition Key/Switch Positions

1 - ACC
2 - LOCK
3 - OFF
4 - ON/RUN
5 - START

(10) Squeeze the interlock cable locking tab. Remove the cable from the interlock housing (Fig. 284) .

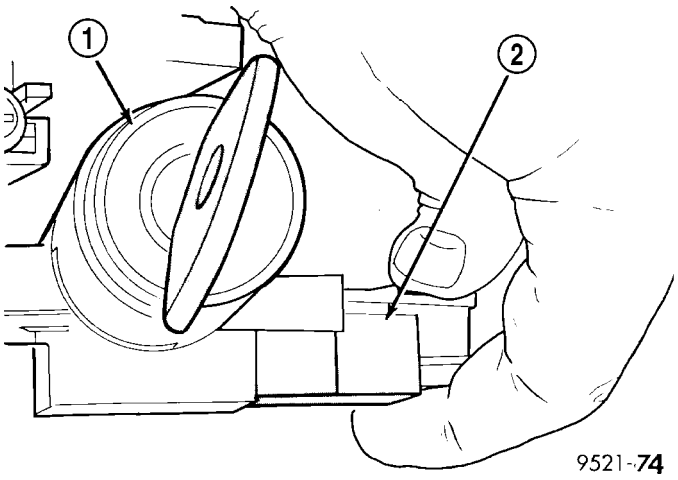

Fig. 284 Interlock Cable and Connector

1 - IGNITION LOCK CYLINDER
2 - INTERLOCK CABLE

(11) Release cable from retaining clips and remove through opening under steering column.

INSTALLATION

CAUTION: When installing interlock cable assembly, care must be taken not to bend exposed cable wire and slug at shifter end of cable.

(1) Route interlock cable through hole in instrument panel below steering column and around to gear shifter assembly.

(2) Turn the ignition key to the “OFF” or “ON/RUN” position (Fig. 283).

(3) Install the interlock cable into the interlock housing at the steering column (Fig. 285). Verify the cable snaps into the housing and is fully seated.

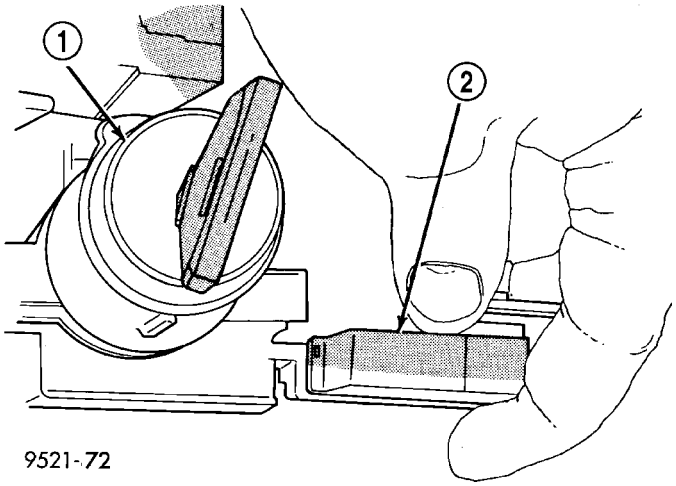

Fig. 285 Interlock Cable at Interlock Housing

1 - IGNITION SWITCH
2 - INTERLOCK CABLE

SHIFT INTERLOCK CABLE (Continued)

(4) Return the ignition key to the “LOCK” position (Fig. 283).

(5) Connect the BTSI solenoid connector (Fig. 282).

(6) Install steering column upper and lower shrouds (Fig. 281).

(7) Install steering column lower cover (Fig. 280).

(8) Verify that shifter is in gated “PARK”.

(9) Install the cable core end to the plastic cam of the shifter mechanism. Snap the shifter/ignition interlock cable end fitting into the groove in the gear-shift mechanism as shown in (Fig. 279).

(10) **Adjust interlock cable/system as follows:** If interlock cable is being replaced, it will come with an adjustment pin. Remove the pin from the cable and allow the cable to “self-adjust”. Lock cable adjustment by pressing down on the adjuster lock until bottomed at the cable housing. If interlock cable is being re-used, no pin will be provided. Pry up on cable adjuster lock to release and allow cable to “self-adjust”. Lock cable adjustment by pressing down on the adjuster lock until bottomed at the cable housing.

(11) **Connect battery negative cable and verify interlock system operation as follows:**

ACTION	EXPECTED RESPONSE
1. Turn key to the ″OFF″ position.	1. Shifter CAN be shifted out of park.
2. Turn key to the ″ON/RUN″ position.	2. Shifter CANNOT be shifted out of park.
3. Turn key to the ″ON/RUN″ position and depress the brake pedal.	3. Shifter CAN be shifted out of park.
4. Leave shifter in any gear and try to return key to the ″LOCK″ or ″ACC″ position.	4. Key cannot be returned to the ″LOCK″ or ″ACC″ position.
5. Return shifter to ″PARK″ and try to remove the key.	5. Key can be removed (after returning to ″LOCK″ position).
6. With the key removed, try to shift out of ″PARK″.	6. Shifter cannot be shifted out of ″PARK″.
NOTE: Any failure to meet these expected responses requires system adjustment or repair.	

(12) Install shifter bezel (Fig. 278).

(13) Install center console assembly (Fig. 277).

(14) Install gearshift knob and tighten set screw to 2 N·m (17 in. lbs.) torque (Fig. 276).

(15) Connect battery negative cable.

SHIFT INTERLOCK MECHANISM

REMOVAL

(1) Remove the steering column lower cover (Fig. 286) .

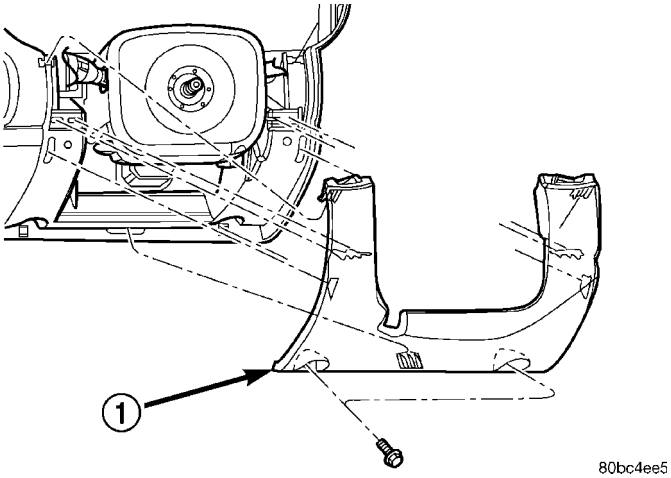

Fig. 286 Steering Column Lower Cover

1 - LOWER COVER

(2) Remove the steering column upper and lower shrouds (Fig. 287) .

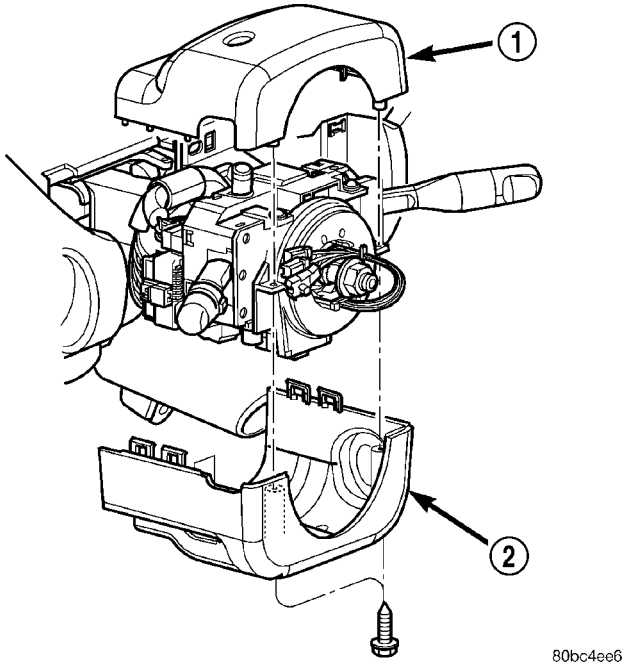

Fig. 287 Steering Column Shrouds

1 - UPPER SHROUD
2 - LOWER SHROUD

SHIFT INTERLOCK MECHANISM (Continued)

(3) Turn the ignition key to the “OFF” or “ON/RUN” position (Fig. 288) .

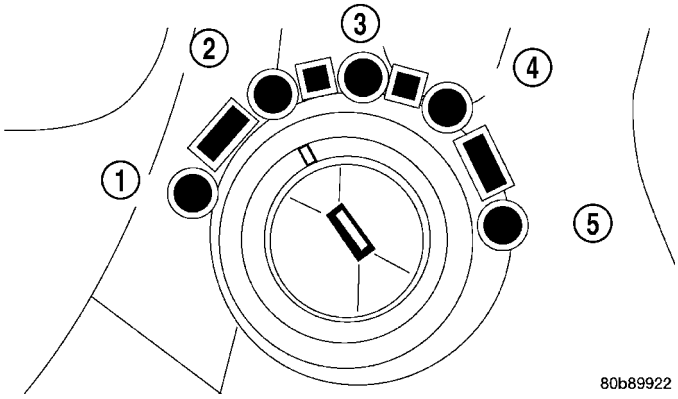

Fig. 288 Ignition Key/Switch Positions

1 - ACC
2 - LOCK
3 - OFF
4 - ON/RUN
5 - START

(4) Grasp the interlock cable and connector firmly. Remove the interlock cable (Fig. 289) .

(5) Remove the two interlock mechanism-to-steering column attaching screws (Fig. 290) . Remove the interlock housing.

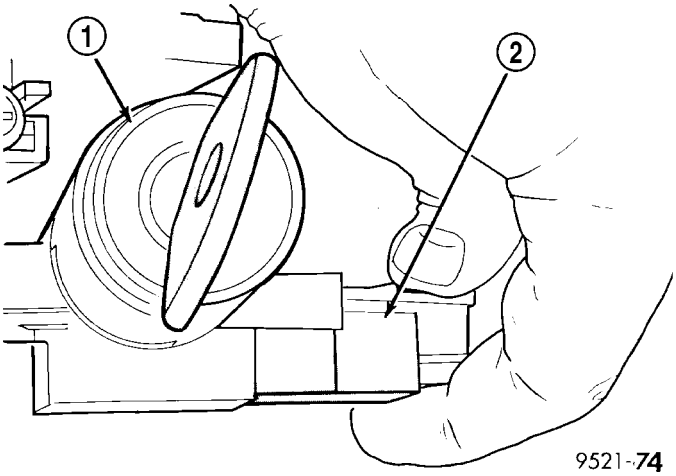

Fig. 289 Interlock Cable

1 - IGNITION LOCK CYLINDER
2 - INTERLOCK CABLE

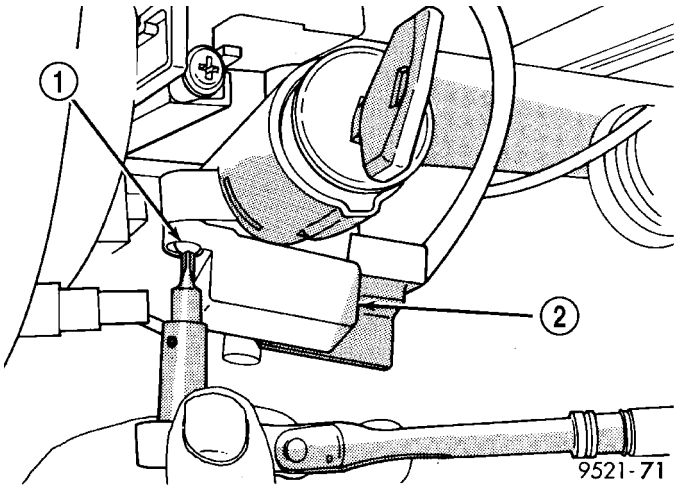

Fig. 290 Interlock Mechanism

1 - MOUNTING SCREW
2 - INTERLOCK MECHANISM

INSTALLATION

(1) Position the interlock housing at steering column. Install the two interlock mechanism-to-steering column attaching screws. Torque screws to 3 N·m (21 in. lbs.).

(2) Snap the interlock cable into the housing.

(3) Install steering column upper and lower shrouds (Fig. 287) .

(4) Install steering column lower cover (Fig. 286) .

SHIFT INTERLOCK SYSTEM

ADJUSTMENTS

BRAKE/TRANSMISSION SHIFT INTERLOCK SYSTEM

VERIFICATION

The following chart describes the normal operation of the Brake Transmission Shift Interlock (BTSI) system. If the “expected response” differs from the vehicle’s response, then system repair and/or adjustment is necessary.

ACTION	EXPECTED RESPONSE
1. Turn key to the ″OFF″ position.	1. Shifter CAN be shifted out of park.
2. Turn key to the ″ON/RUN″ position.	2. Shifter CANNOT be shifted out of park.
3. Turn key to the ″ON/RUN″ position and depress the brake pedal.	3. Shifter CAN be shifted out of park.
4. Leave shifter in any gear and try to return key to the ″LOCK″ or ″ACC″ position.	4. Key cannot be returned to the ″LOCK″ or ″ACC″ position.
5. Return shifter to ″PARK″ and try to remove the key.	5. Key can be removed (after returning to ″LOCK″ position).
6. With the key removed, try to shift out of ″PARK″.	6. Shifter cannot be shifted out of ″PARK″.
NOTE: Any failure to meet these expected responses requires system adjustment or repair.	

ADJUSTMENT

(1) Loosen set screw and remove knob from shifter handle (Fig. 291).

(2) Remove the center console assembly as shown in (Fig. 292).

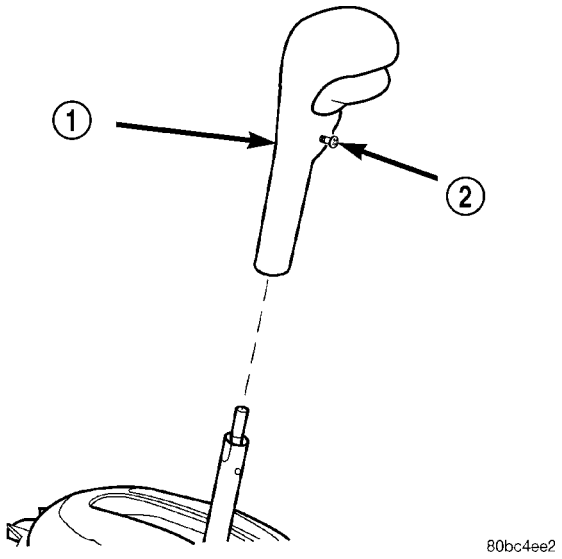

Fig. 291 Gearshift Knob

1 - SHIFTER KNOB
2 - SET SCREW

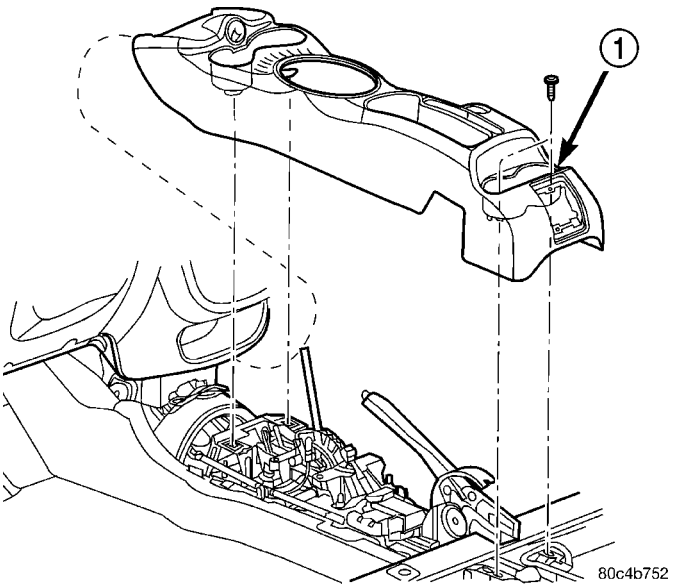

Fig. 292 Center Console Removal/Installation

1 - CENTER CONSOLE

SHIFT INTERLOCK SYSTEM (Continued)

(3) Remove shifter bezel (Fig. 293).

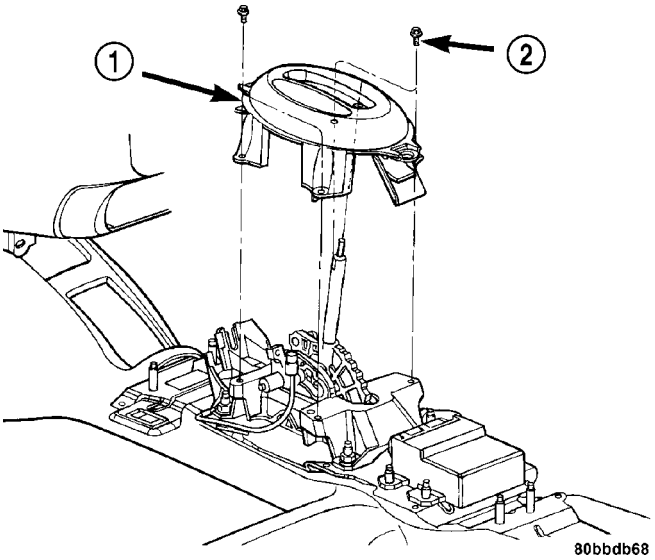

Fig. 293 Shifter Bezel Removal/Installation

1 - BEZEL
2 - SCREW (4)

(4) **Adjust interlock cable/system as follows:** Pry up on cable adjuster lock to release and allow cable to "self-adjust". Lock cable adjustment by pressing down on the adjuster lock until bottomed at the cable housing.

(5) Verify correct system operation. Refer to verification procedure.

(6) Install shifter bezel (Fig. 293).

(7) Install center console assembly (Fig. 292).

(8) Install gearshift knob and tighten set screw to 2 N·m (17 in. lbs.) torque (Fig. 291).

SOLENOID/PRESSURE SWITCH ASSY

DESCRIPTION

The Solenoid/Pressure Switch Assembly (Fig. 294) is external to the transaxle and mounted to the transaxle case. The assembly consists of four solenoids that control hydraulic pressure to the LR/CC, 2/4, OD, and UD friction elements. The reverse clutch is controlled by line pressure from the manual valve in the valve body. The solenoids are contained within the Solenoid/Pressure Switch Assembly, and can only be serviced by replacing the assembly.

The solenoid assembly also contains pressure switches that monitor and send hydraulic circuit information to the PCM/TCM. Likewise, the pressure switches can only be service by replacing the assembly.

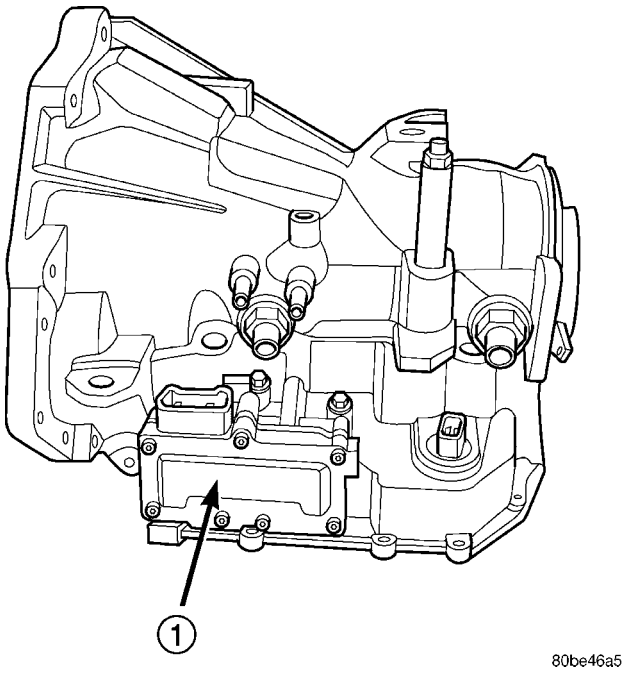

Fig. 294 Solenoid/Pressure Switch Assembly

1 - SOLENOID AND PRESSURE SWITCH ASSEMBLY

OPERATION

SOLENOIDS

The solenoids receive electrical power from the Transmission Control Relay through a single wire. The PCM/TCM energizes or operates the solenoids individually by grounding the return wire of the solenoid needed. When a solenoid is energized, the solenoid valve shifts, and a fluid passage is opened or closed (vented or applied), depending on its default operating state. The result is an apply or release of a frictional element.

The 2/4 and UD solenoids are normally applied, which by design allow fluid to pass through in their relaxed or "off" state. This allows transaxle limp-in (P,R,N,2) in the event of an electrical failure.

The continuity of the solenoids and circuits are periodically tested. Each solenoid is turned on or off depending on its current state. An inductive spike should be detected by the PCM/TCM during this test. It no spike is detected, the circuit is tested again to verify the failure. In addition to the periodic testing, the solenoid circuits are tested if a speed ratio or pressure switch error occurs.

SOLENOID/PRESSURE SWITCH ASSY (Continued)

PRESSURE SWITCHES

The PCM/TCM relies on three pressure switches to monitor fluid pressure in the L/R, 2/4, and OD hydraulic circuits. The primary purpose of these switches is to help the PCM/TCM detect when clutch circuit hydraulic failures occur. The range for the pressure switch closing and opening points is 11-23 psi. Typically the switch opening point will be approximately one psi lower than the closing point. For example, a switch may close at 18 psi and open at 17 psi. The switches are continuously monitored by the PCM/TCM for the correct states (open or closed) in each gear as shown in the following chart:

PRESSURE SWITCH STATES

GEAR	L/R	2/4	OD
R	OP	OP	OP
P/N	CL	OP	OP
1st	CL	OP	OP
2nd	OP	CL	OP
D	OP	OP	CL
OD	OP	CL	CL

OP = OPEN

CL = CLOSED

A Diagnostic Trouble Code (DTC) will set if the PCM/TCM senses any switch open or closed at the wrong time in a given gear.

The PCM/TCM also tests the 2/4 and OD pressure switches when they are normally off (OD and 2/4 are tested in 1st gear, OD in 2nd gear, and 2/4 in 3rd gear). The test simply verifies that they are operational, by looking for a closed state when the corresponding element is applied. Immediately after a shift into 1st, 2nd, or 3rd gear with the engine speed above 1000 rpm, the PCM/TCM momentarily turns on element pressure to the 2/4 and/or OD clutch circuits to identify that the appropriate switch has closed. If it doesn't close, it is tested again. If the switch fails to close the second time, the appropriate Diagnostic Trouble Code (DTC) will set.

REMOVAL

(1) Disconnect the battery cables.

(2) Remove air cleaner assembly (Fig. 295) .

(3) Remove the battery hold down clamp and remove the battery (Fig. 296) .

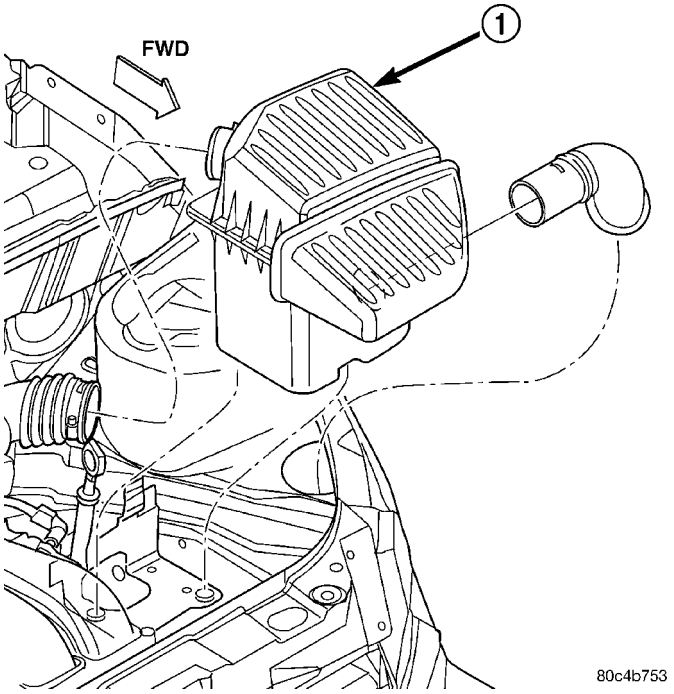

Fig. 295 Air Cleaner Assembly Removal/Installation

1 - AIR CLEANER ASSEMBLY

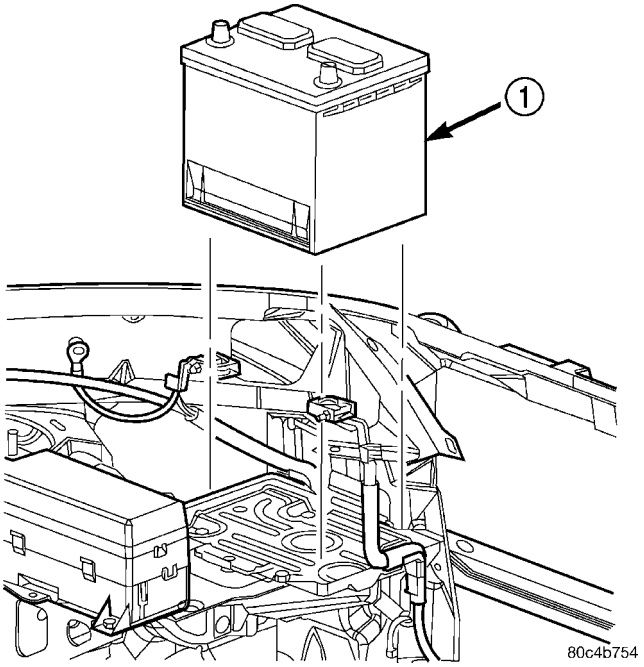

Fig. 296 Battery Removal/Installation

1 - BATTERY

SOLENOID/PRESSURE SWITCH ASSY (Continued)

(4) Remove the battery tray (Fig. 297) .

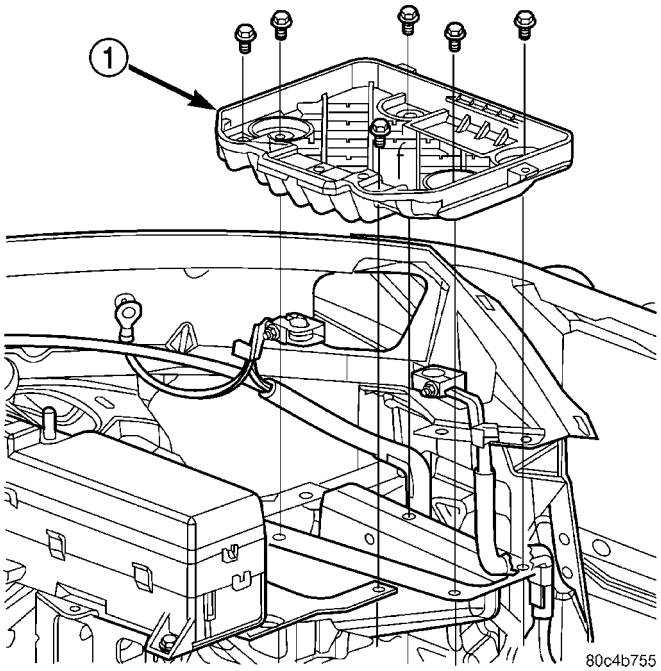

Fig. 297 Battery Tray Removal/Installation

1 - BATTERY TRAY

(5) Disconnect and remove the input speed sensor (Fig. 298) .

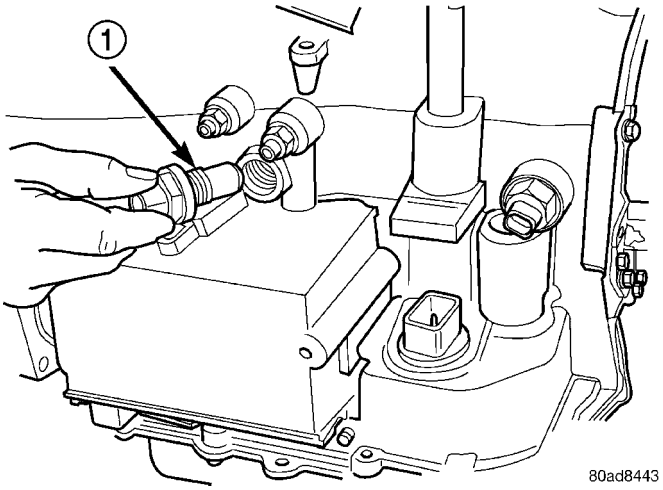

Fig. 298 Input Speed Sensor

1 - INPUT (TURBINE) SPEED SENSOR

(6) Disconnect the transmission oil cooler lines. Cap off hoses and fittings to prevent foreign matter intrusion.

(7) Disconnect the solenoid/pressure switch assembly connector.

(8) Remove the three solenoid/pressure switch assembly-to-transaxle case bolts (Fig. 299) .

(9) Remove solenoid/pressure switch assembly and gasket (Fig. 300) .

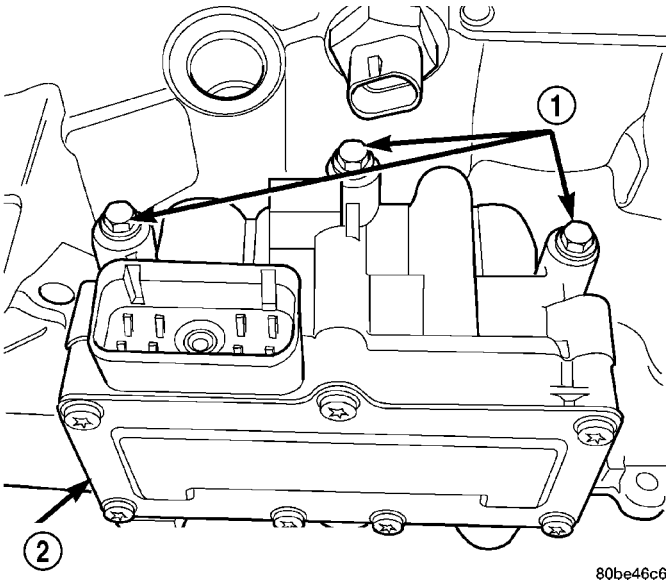

Fig. 299 Attaching Bolts

1 - BOLTS
2 - SOLENOID AND PRESSURE SWITCH ASSEMBLY

CAUTION: Be sure to keep foreign material from entering ports in transaxle case. Erratic transaxle operation and/or failure can result.

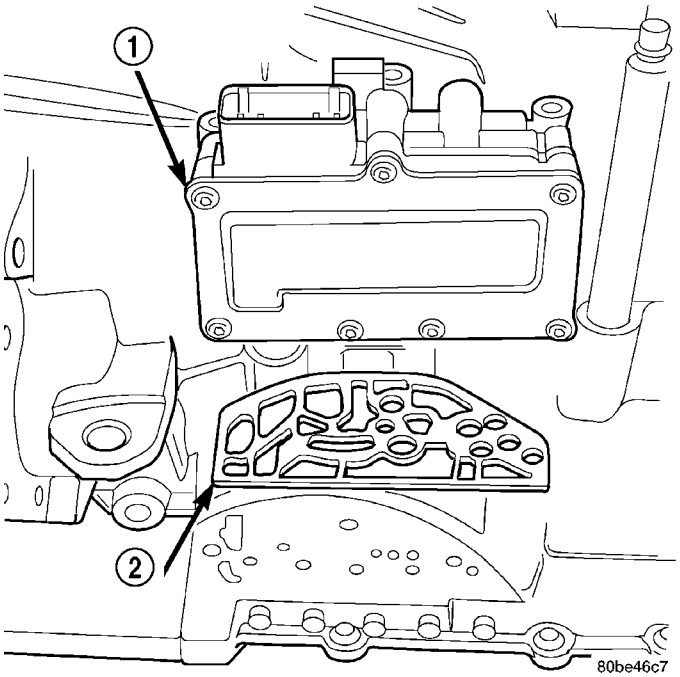

Fig. 300 Solenoid/Pressure Switch Assembly and Gasket

1 - SOLENOID/PRESSURE SWITCH ASSEMBLY
2 - GASKET

INSTALLATION

(1) Install solenoid/pressure switch assembly to case using a new gasket (Fig. 300) .

SOLENOID/PRESSURE SWITCH ASSY (Continued)

(2) Install bolts and torque to 13 N·m (110 in. lbs.) (Fig. 299) .
(3) Install 8-way connector and torque screw to 4 N·m (35 in. lbs.).
(4) Uncap and install transmission oil cooler lines.
(5) Install input speed sensor (Fig. 298) and torque to 27 N·m (20 ft. lbs.).
(6) Install the battery tray (Fig. 297) .
(7) Install the battery and hold down clamp (Fig. 296) .
(8) Install air cleaner assembly (Fig. 295) .
(9) Connect battery cables.
(10) Perform Transaxle Quick Learn Procedure. Refer to SERVICE PROCEDURES.

SPEED SENSOR - INPUT

DESCRIPTION

The Input Speed Sensor is a two-wire magnetic pickup device that generates AC signals as rotation occurs. It is threaded into the transaxle case (Fig. 301), sealed with an o-ring (Fig. 302), and is considered a primary input to the Powertrain/Transmission Control Module.

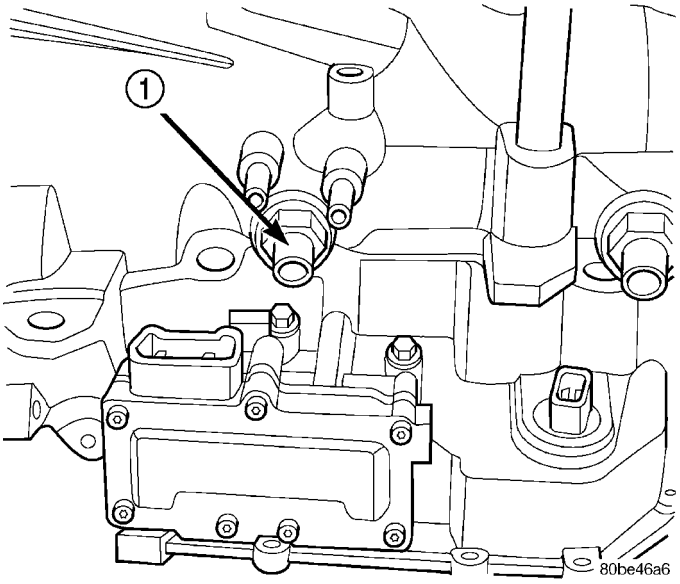

Fig. 301 Input Speed Sensor Location

1 - INPUT SPEED SENSOR

OPERATION

The Input Speed Sensor provides information on how fast the input shaft is rotating. As the teeth of the input clutch hub pass by the sensor coil (Fig. 303), an AC voltage is generated and sent to the PCM/TCM. The PCM/TCM interprets this information as input shaft rpm.

The PCM/TCM compares the input speed signal with output speed signal to determine the following:

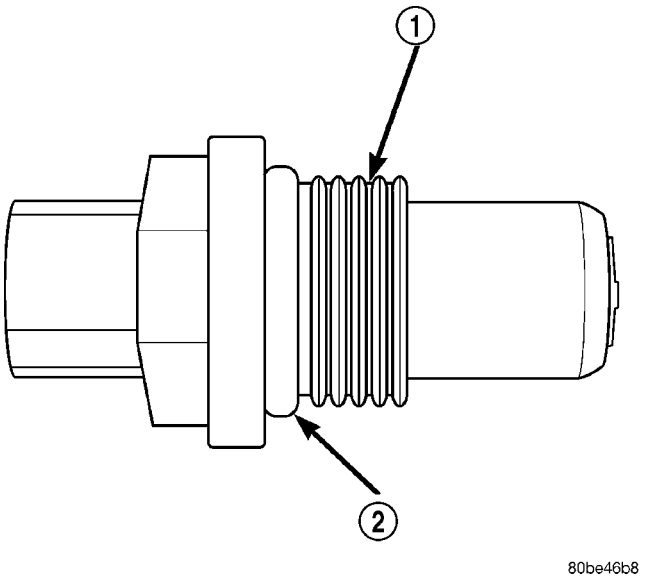

Fig. 302 O-Ring Location

1 - INPUT SPEED SENSOR
2 - O-RING

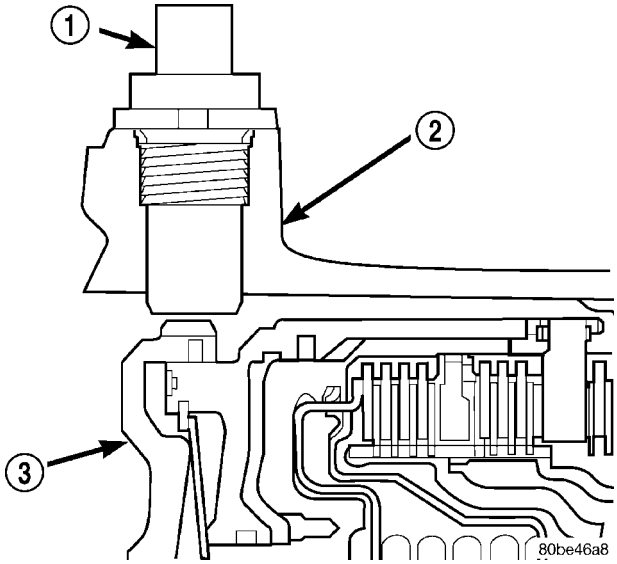

Fig. 303 Sensor Relation to Input Clutch Hub

1 - INPUT SPEED SENSOR
2 - TRANSAXLE CASE
3 - INPUT CLUTCH HUB

- Transmission gear ratio
- Speed ratio error detection
- CVI calculation

The PCM/TCM also compares the input speed signal and the engine speed signal to determine the following:

- Torque converter clutch slippage
- Torque converter element speed ratio

SPEED SENSOR - INPUT (Continued)

REMOVAL

CAUTION: When disconnecting speed sensor connector, be sure that the connector weather seal does not fall off or remain in old sensor.

(1) Disconnect the battery cables.
(2) Remove air cleaner assembly (Fig. 304) .

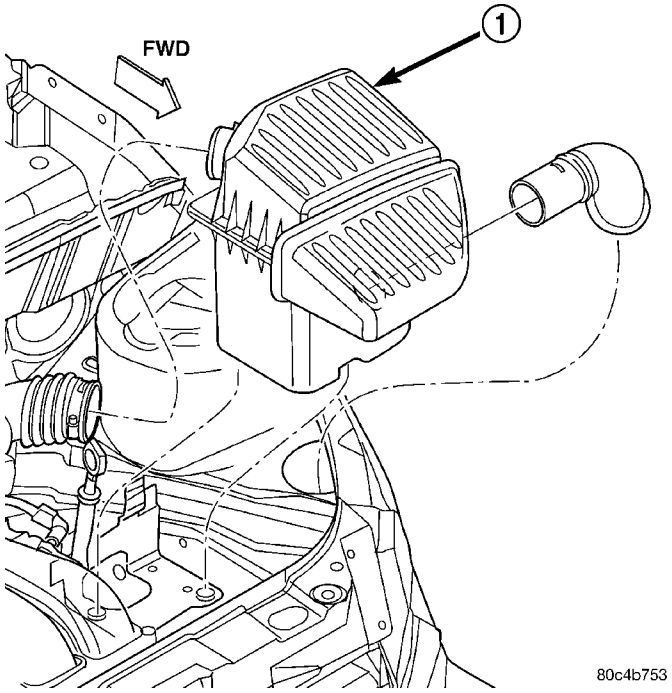

Fig. 304 Air Cleaner Assembly Removal/Installation

1 - AIR CLEANER ASSEMBLY

(3) Remove the battery hold down clamp and remove the battery (Fig. 305) .
(4) Remove the battery tray (Fig. 306) .
(5) Disconnect input speed sensor connector.

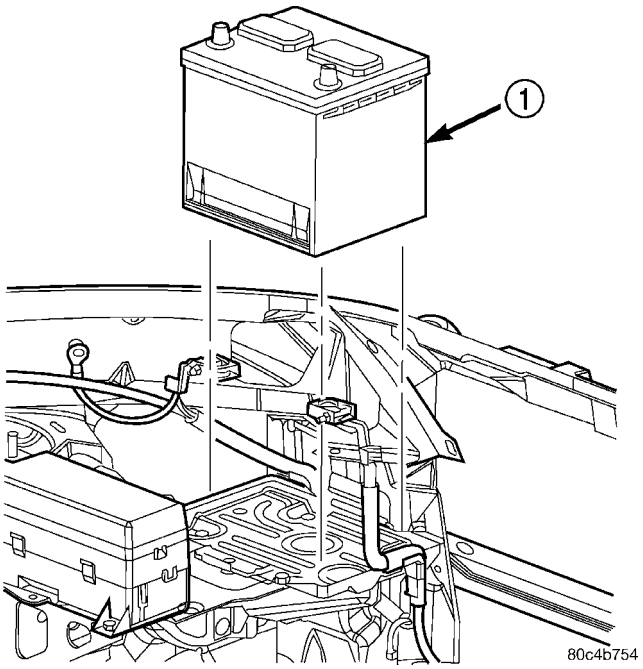

Fig. 305 Battery Removal/Installation

1 - BATTERY

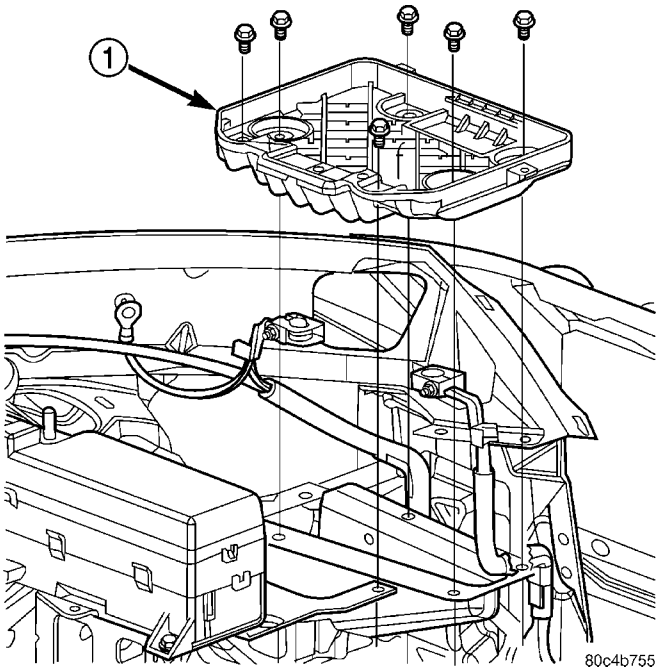

Fig. 306 Battery Tray Removal/Installation

1 - BATTERY TRAY

SPEED SENSOR - INPUT (Continued)

(6) Unscrew and remove input speed sensor (Fig. 307) .

(7) Inspect speed sensor o-ring (Fig. 308) and replace if necessary.

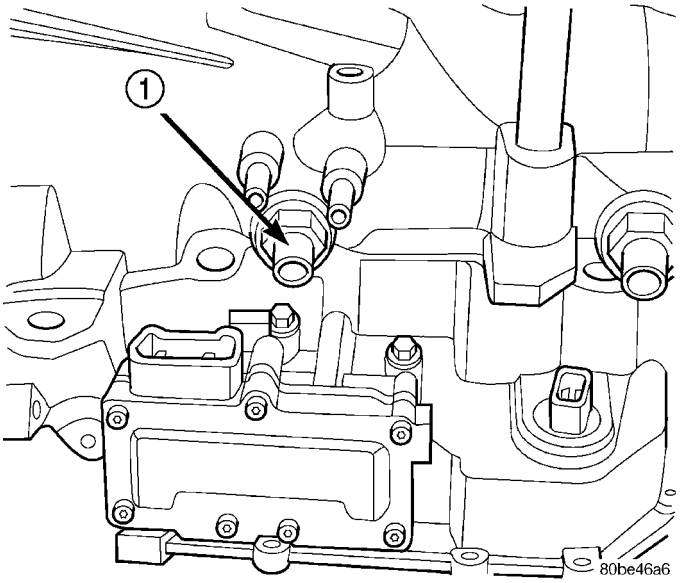

Fig. 307 Input (Turbine) Speed Sensor

1 - INPUT SPEED SENSOR

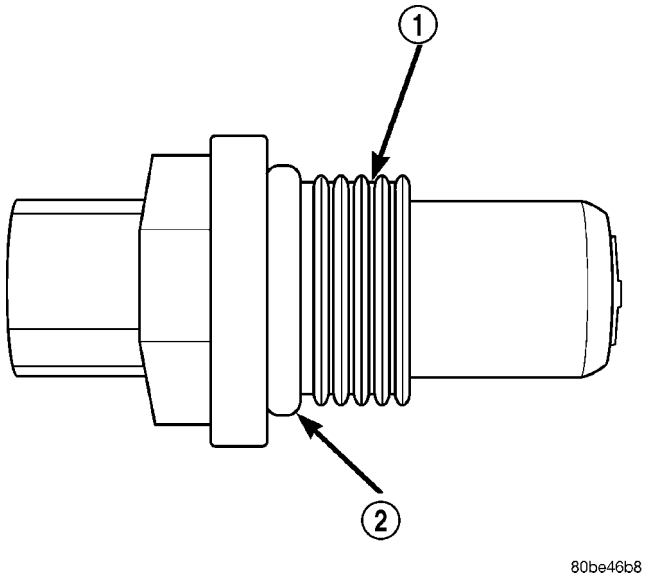

Fig. 308 O-ring Location

1 - INPUT SPEED SENSOR
2 - O-RING

INSTALLATION

CAUTION: When disconnecting speed sensor connector, be sure that the connector weather seal does not fall off or remain in old sensor.

(1) Verify o-ring is installed into position.

(2) Install and tighten input speed sensor to 27 N·m (20 ft. lbs.).

(3) Connect speed sensor connector.

(4) Install the battery tray (Fig. 306) .

(5) Install the battery and hold down clamp (Fig. 305) .

(6) Install air cleaner assembly (Fig. 304) .

(7) Connect battery cables.

SPEED SENSOR - OUTPUT

DESCRIPTION

The Output Speed Sensor is a two-wire magnetic pickup device that generates an AC signal as rotation occurs. It is threaded into the transaxle case (Fig. 309), sealed with an o-ring (Fig. 310), and is considered a primary input to the Powetrain/Transmission Control Module.

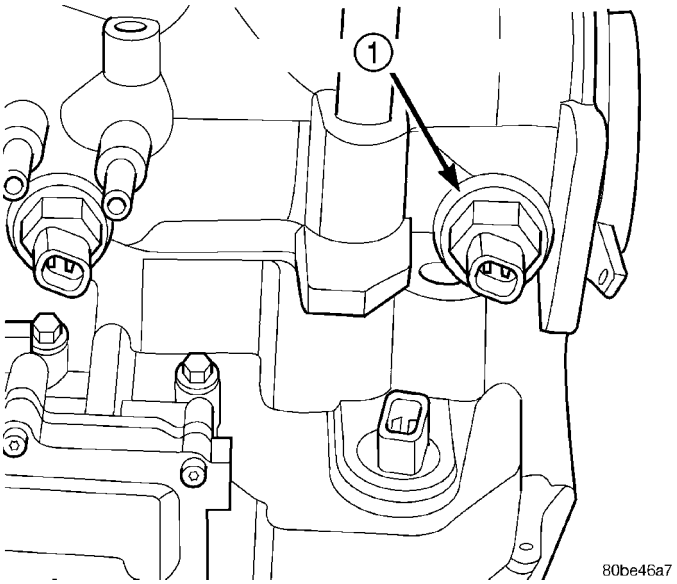

Fig. 309 Output Speed Sensor

1 - OUTPUT SPEED SENSOR

SPEED SENSOR - OUTPUT (Continued)

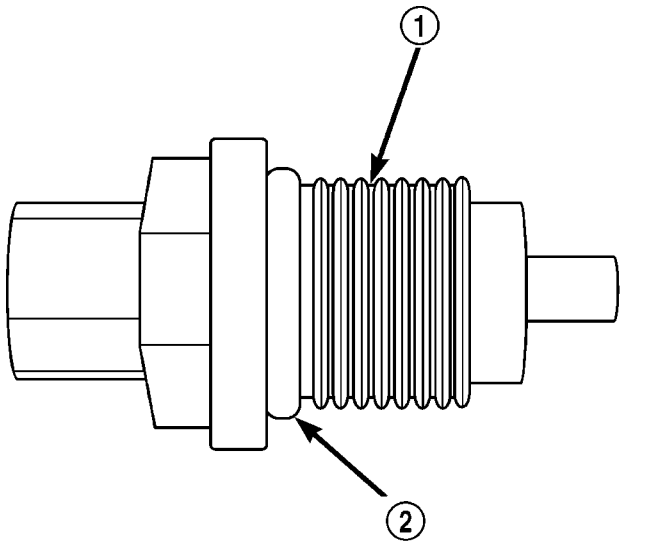

Fig. 310 O-Ring Location

1 - OUTPUT SPEED SENSOR
2 - O-RING

OPERATION

The Output Speed Sensor provides information on how fast the output shaft is rotating. As the rear planetary carrier park pawl lugs pass by the sensor coil (Fig. 311), an AC voltage is generated and sent to the PCM/TCM. The PCM/TCM interprets this information as output shaft rpm.

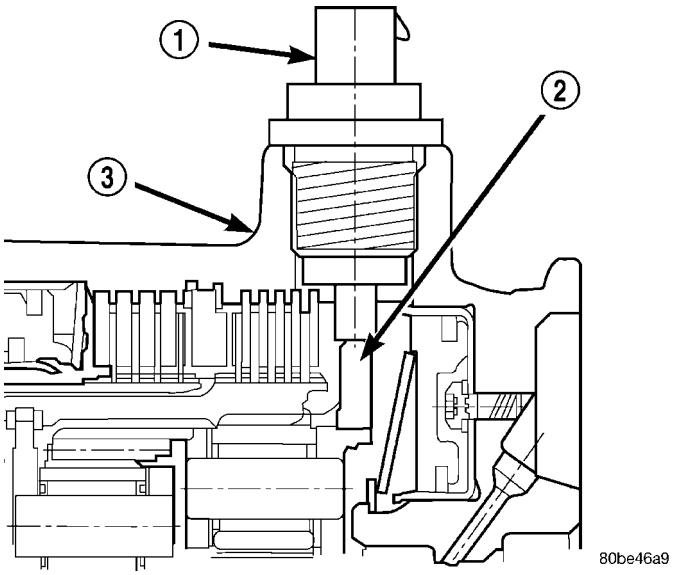

Fig. 311 Sensor Relation to Planet Carrier Park Pawl

1 - OUTPUT SPEED SENSOR
2 - REAR PLANET CARRIER/OUTPUT SHAFT ASSEMBLY
3 - TRANSAXLE CASE

The PCM/TCM compares the input and output speed signals to determine the following:

- Transmission gear ratio
- Speed ratio error detection
- CVI calculation

VEHICLE SPEED SIGNAL

The vehicle speed signal is taken from the Output Speed Sensor. The PCM converts this signal into a pulse per mile signal and sends the vehicle speed message across the communication bus to the BCM. The BCM sends this signal to the Instrument Cluster to display vehicle speed to the driver. The vehicle speed signal pulse is roughly 8000 pulses per mile.

REMOVAL

CAUTION: When disconnecting speed sensor connector, be sure that the connector weather seal does not fall off or remain in old sensor.

(1) Disconnect the battery cables.
(2) Remove air cleaner assembly (Fig. 312) .

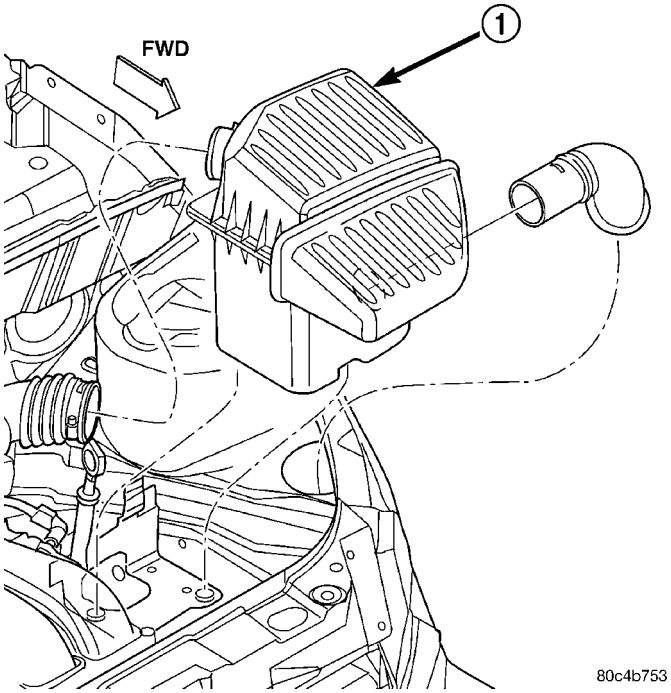

Fig. 312 Air Cleaner Assembly Removal/Installation

1 - AIR CLEANER ASSEMBLY

SPEED SENSOR - OUTPUT (Continued)

(3) Remove the battery hold down clamp and remove the battery (Fig. 313) .

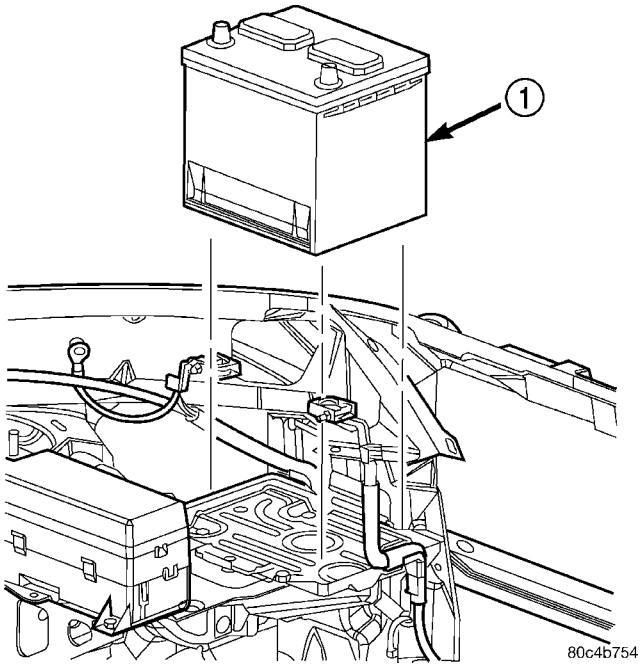

Fig. 313 Battery Removal/Installation

1 - BATTERY

(4) Remove the battery tray (Fig. 314) .

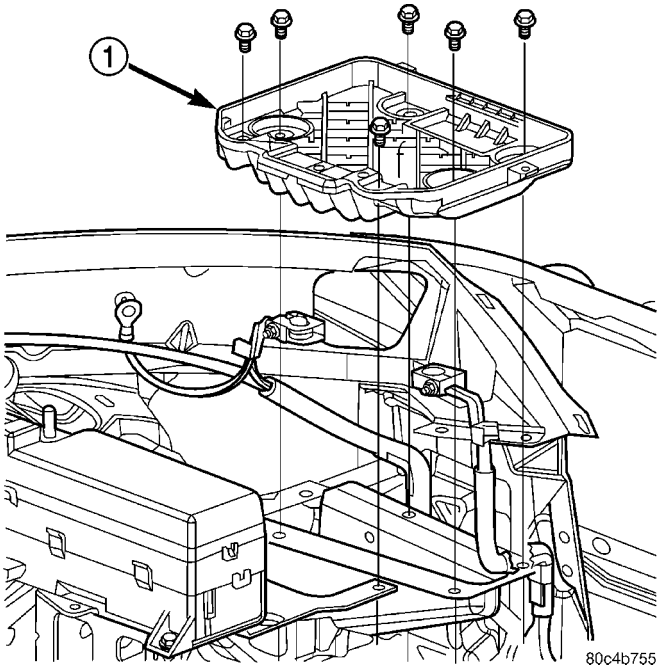

Fig. 314 Battery Tray Removal/Installation

1 - BATTERY TRAY

(5) Disconnect ouput speed sensor connector.

(6) Unscrew and remove output speed sensor (Fig. 315) .

(7) Inspect speed sensor o-ring (Fig. 316) and replace if necessary.

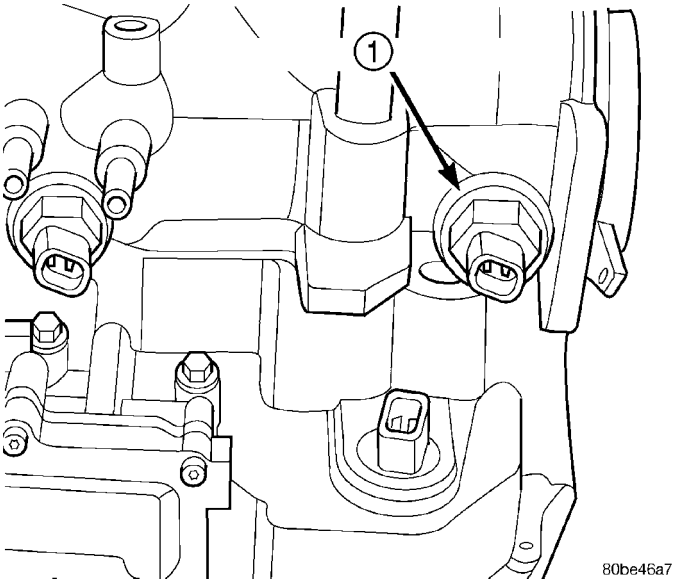

Fig. 315 Output Speed Sensor

1 - OUTPUT SPEED SENSOR

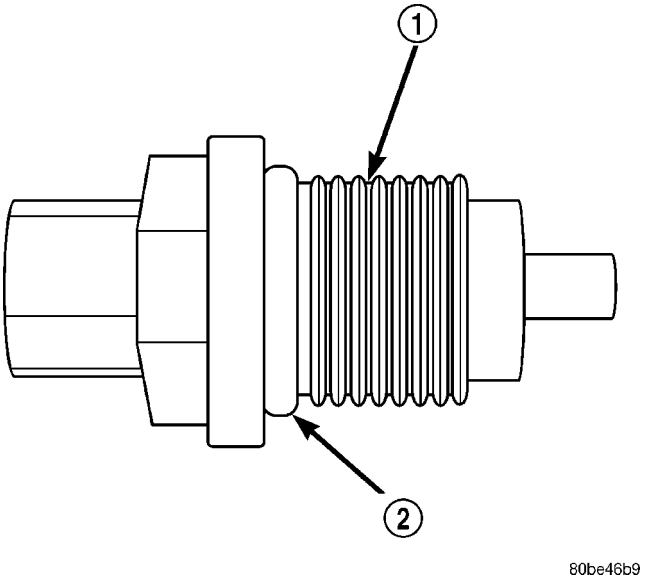

Fig. 316 O-ring Location

1 - OUTPUT SPEED SENSOR
2 - O-RING

INSTALLATION

CAUTION: When disconnecting speed sensor connector, be sure that the connector weather seal does not fall off or remain in old sensor.

(1) Verify o-ring is installed into position (Fig. 316).

(2) Install and tighten output speed sensor to 27 N·m (20 ft. lbs.).

SPEED SENSOR - OUTPUT (Continued)

(3) Connect speed sensor connector.
(4) Install the battery tray (Fig. 314) .
(5) Install the battery and hold down clamp (Fig. 313) .
(6) Install air cleaner assembly (Fig. 312) .

TORQUE CONVERTER

DESCRIPTION

The torque converter (Fig. 317) is a hydraulic device that couples the engine crankshaft to the transmission. The torque converter consists of an outer shell with an internal turbine, a stator, an overrunning clutch, an impeller and an electronically applied converter clutch. The converter clutch provides reduced engine speed and greater fuel economy when engaged. Clutch engagement also provides reduced transmission fluid temperatures. The converter clutch engages in third gear. The torque converter hub drives the transmission oil (fluid) pump.

The torque converter is a sealed, welded unit that is not repairable and is serviced as an assembly.

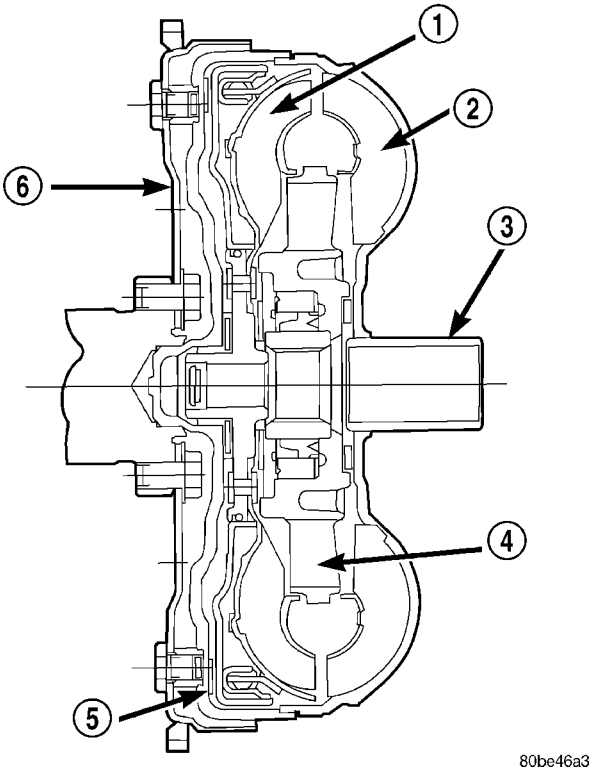

Fig. 317 Torque Converter Assembly

1 - TURBINE
2 - IMPELLER
3 - HUB
4 - STATOR
5 - CONVERTER CLUTCH DISC
6 - DRIVE PLATE

TORQUE CONVERTER (Continued)

IMPELLER

The impeller (Fig. 318) is an integral part of the converter housing. The impeller consists of curved blades placed radially along the inside of the housing on the transmission side of the converter. As the converter housing is rotated by the engine, so is the impeller, because they are one and the same and are the driving member of the system.

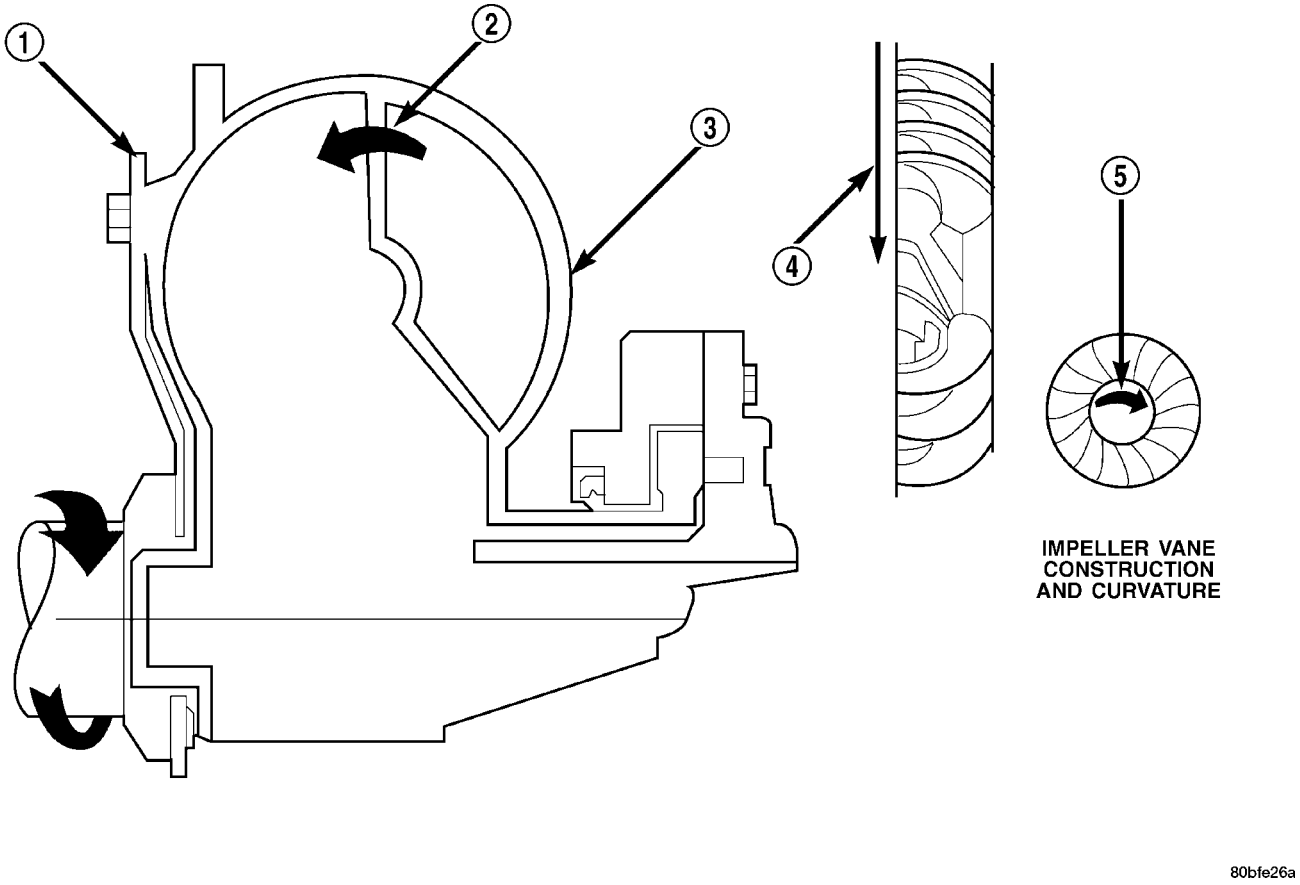

Fig. 318 Impeller

1 - ENGINE FLEXPLATE
2 - OIL FLOW FROM IMPELLER SECTION INTO TURBINE SECTION
3 - IMPELLER VANES AND COVER ARE INTEGRAL
4 - ENGINE ROTATION
5 - ENGINE ROTATION

TORQUE CONVERTER (Continued)

TURBINE

The turbine (Fig. 319) is the output, or driven, member of the converter. The turbine is mounted within the housing opposite the impeller, but is not attached to the housing. The input shaft is inserted through the center of the impeller and splined into the turbine. The design of the turbine is similar to the impeller, except the blades of the turbine are curved in the opposite direction.

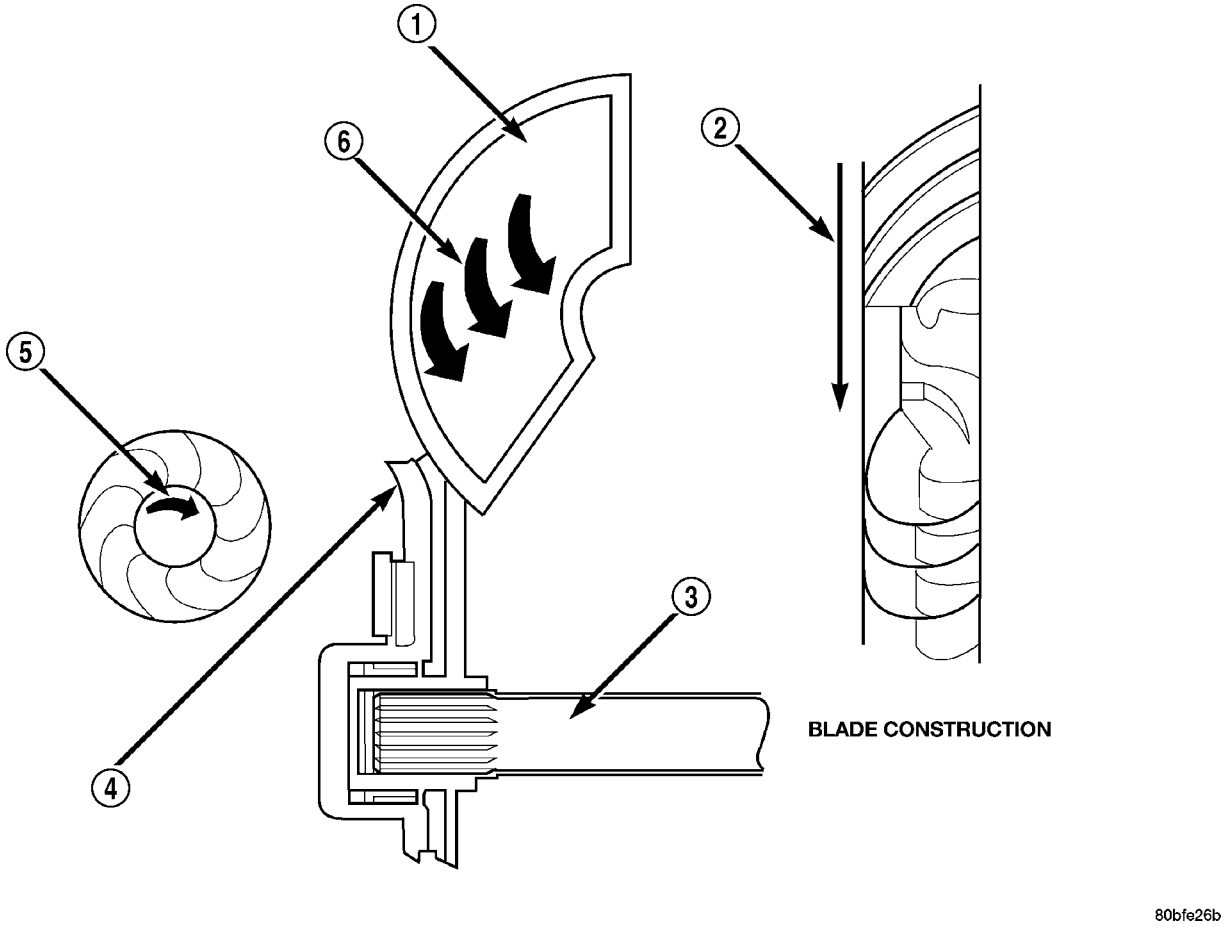

Fig. 319 Turbine

1 - TURBINE VANE
2 - ENGINE ROTATION
3 - INPUT SHAFT
4 - PORTION OF TORQUE CONVERTER COVER
5 - ENGINE ROTATION
6 - OIL FLOW WITHIN TURBINE SECTION

TORQUE CONVERTER (Continued)

STATOR

The stator assembly (Fig. 320) is mounted on a stationary shaft which is an integral part of the oil pump. The stator is located between the impeller and turbine within the torque converter case (Fig. 321). The stator contains an over-running clutch, which allows the stator to rotate only in a clockwise direction. When the stator is locked against the over-running clutch, the torque multiplication feature of the torque converter is operational.

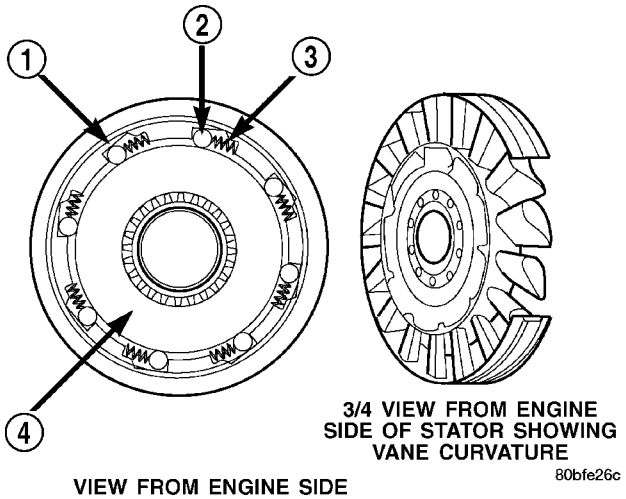

Fig. 320 Stator Components

1 - CAM (OUTER RACE)
2 - ROLLER
3 - SPRING
4 - INNER RACE

TORQUE CONVERTER CLUTCH (TCC)

The TCC (Fig. 322) was installed to improve the efficiency of the torque converter that is lost to the slippage of the fluid coupling. Although the fluid coupling provides smooth, shock–free power transfer, it is natural for all fluid couplings to slip. If the impeller and turbine were mechanically locked together, a zero slippage condition could be obtained. A hydraulic piston was added to the turbine, and a friction material was added to the inside of the front cover to provide this mechanical lock-up.

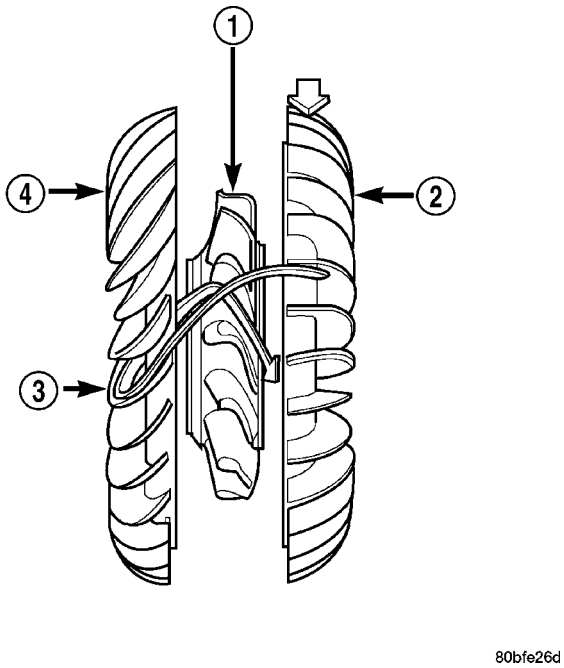

Fig. 321 Stator Location

1 - STATOR
2 - IMPELLER
3 - FLUID FLOW
4 - TURBINE

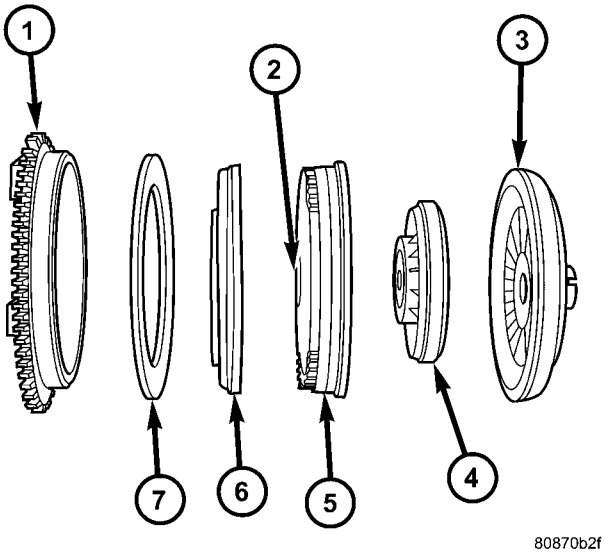

Fig. 322 Torque Converter Clutch (TCC)

1 - IMPELLER FRONT COVER
2 - THRUST WASHER ASSEMBLY
3 - IMPELLER
4 - STATOR
5 - TURBINE
6 - PISTON
7 - FRICTION DISC

TORQUE CONVERTER (Continued)

OPERATION

The converter impeller (Fig. 323) (driving member), which is integral to the converter housing and bolted to the engine drive plate, rotates at engine speed. The converter turbine (driven member), which reacts from fluid pressure generated by the impeller, rotates and turns the transmission input shaft.

TURBINE

As the fluid that was put into motion by the impeller blades strikes the blades of the turbine, some of the energy and rotational force is transferred into the turbine and the input shaft. This causes both of them (turbine and input shaft) to rotate in a clockwise direction following the impeller. As the fluid is leaving the trailing edges of the turbine's blades it continues in a "hindering" direction back toward the impeller. If the fluid is not redirected before it strikes the impeller, it will strike the impeller in such a direction that it would tend to slow it down.

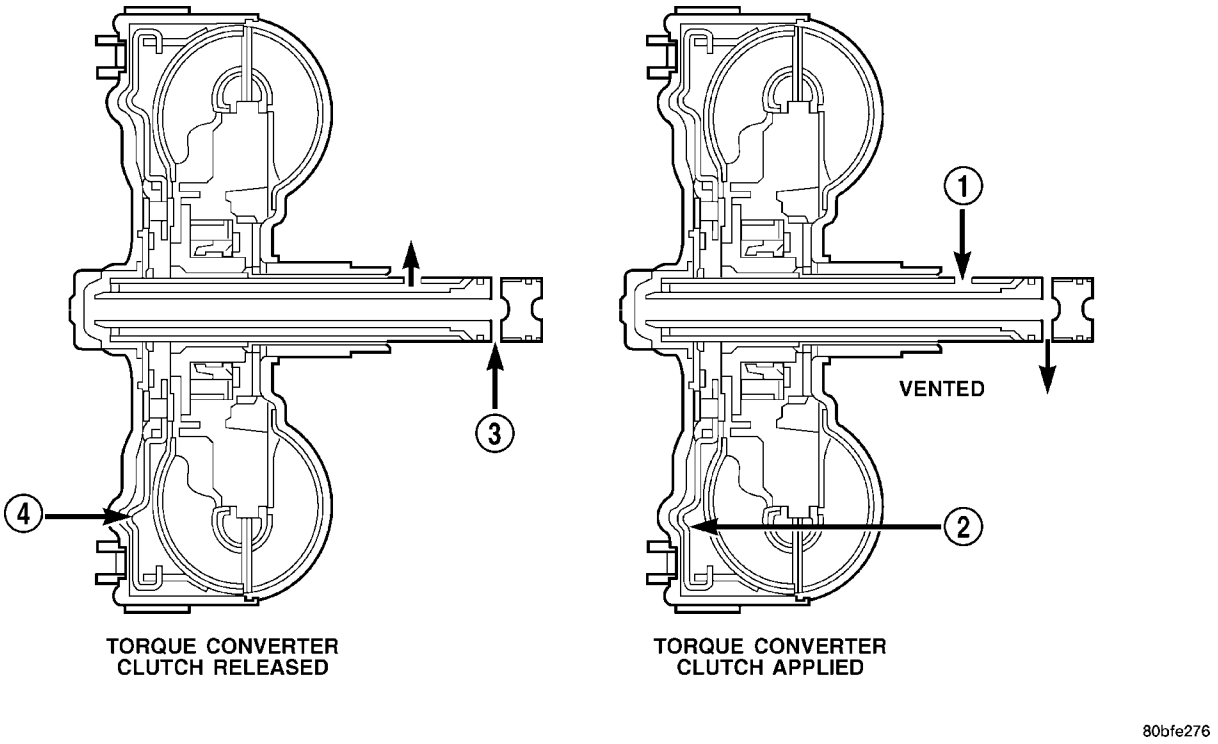

Fig. 323 Torque Converter Fluid Operation

1 - APPLY PRESSURE
2 - THE PISTON MOVES SLIGHTLY FORWARD
3 - RELEASE PRESSURE
4 - THE PISTON MOVES SLIGHTLY REARWARD

TORQUE CONVERTER (Continued)

STATOR

Torque multiplication is achieved by locking the stator's over-running clutch to its shaft (Fig. 324). Under stall conditions (the turbine is stationary), the oil leaving the turbine blades strikes the face of the stator blades and tries to rotate them in a counter-clockwise direction. When this happens the over–running clutch of the stator locks and holds the stator from rotating. With the stator locked, the oil strikes the stator blades and is redirected into a "helping" direction before it enters the impeller. This circulation of oil from impeller to turbine, turbine to stator, and stator to impeller, can produce a maximum torque multiplication of about 2.4:1. As the turbine begins to match the speed of the impeller, the fluid that was hitting the stator in such as way as to cause it to lock–up is no longer doing so. In this condition of operation, the stator begins to free wheel and the converter acts as a fluid coupling.

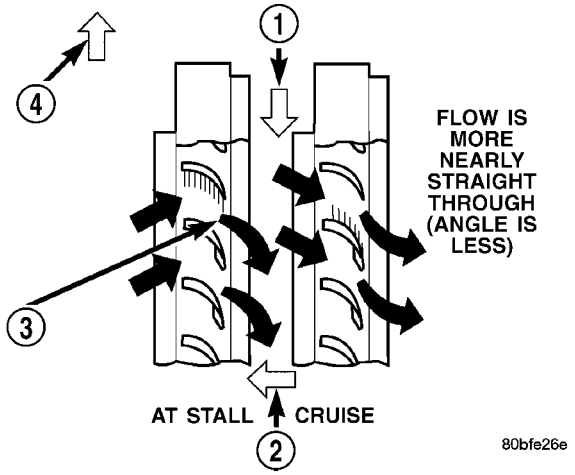

Fig. 324 Stator Operation

1 - DIRECTION STATOR WILL FREE WHEEL DUE TO OIL PUSHING ON BACKSIDE OF VANES
2 - FRONT OF ENGINE
3 - INCREASED ANGLE AS OIL STRIKES VANES
4 - DIRECTION STATOR IS LOCKED UP DUE TO OIL PUSHING AGAINST STATOR VANES

TORQUE CONVERTER CLUTCH (TCC)

In a standard torque converter, the impeller and turbine are rotating at about the same speed and the stator is freewheeling, providing no torque multiplication. By applying the turbine's piston to the front cover's friction material, a total converter engagement can be obtained. The result of this engagement is a direct 1:1 mechanical link between the engine and the transmission.

The engagement and disengagement of the TCC are automatic and controlled by the Powertrain Control Module (PCM). The engagement cannot be activated in the lower gears because it eliminates the torque multiplication effect of the torque converter necessary for acceleration. Inputs that determine clutch engagement are: coolant temperature, vehicle speed and throttle position. The torque converter clutch is engaged by the clutch solenoid on the valve body. The clutch will engage at approximately 56 km/h (35 mph) with light throttle, after the shift to third gear.

REMOVAL

(1) Remove transmission and torque converter from vehicle. (Refer to 21 - TRANSMISSION/TRANSAXLE/AUTOMATIC - 41TE - REMOVAL)

(2) Place a suitable drain pan under the converter housing end of the transmission.

CAUTION: Verify that transmission is secure on the lifting device or work surface, the center of gravity of the transmission will shift when the torque converter is removed creating an unstable condition. The torque converter is a heavy unit. Use caution when separating the torque converter from the transmission.

(3) Pull the torque converter forward until the center hub clears the oil pump seal.

(4) Separate the torque converter from the transmission.

INSTALLATION

Check converter hub and drive notches for sharp edges, burrs, scratches, or nicks. Polish the hub and notches with 320/400 grit paper or crocus cloth if necessary. The hub must be smooth to avoid damaging the pump seal at installation.

(1) Lubricate converter hub and oil pump seal lip with transmission fluid.

(2) Place torque converter in position on transmission.

CAUTION: Do not damage oil pump seal or bushing while inserting torque converter into the front of the transmission.

(3) Align torque converter to oil pump seal opening.

(4) Insert torque converter hub into oil pump.

(5) While pushing torque converter inward, rotate converter until converter is fully seated in the oil pump gears.

(6) Check converter seating with a scale and straightedge (Fig. 325). Surface of converter lugs should be 1/2 in. to rear of straightedge when converter is fully seated.

(7) If necessary, temporarily secure converter with C-clamp attached to the converter housing.

(8) Install the transmission in the vehicle. (Refer to 21 - TRANSMISSION/TRANSAXLE/AUTOMATIC - 41TE - INSTALLATION)

TORQUE CONVERTER (Continued)

(9) Fill the transmission with the recommended fluid. (Refer to 21 - TRANSMISSION/TRANSAXLE/ AUTOMATIC - 41TE/FLUID - STANDARD PROCEDURE)

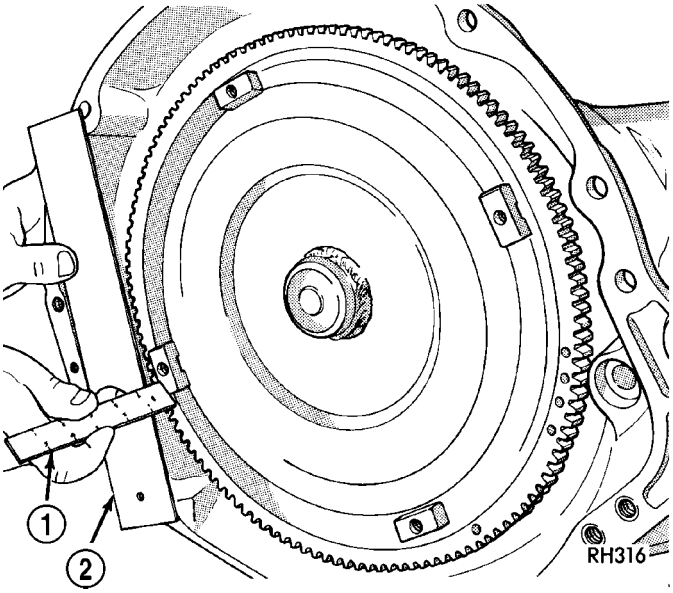

Fig. 325 Checking Torque Converter Seating

1 - SCALE
2 - STRAIGHTEDGE

TRANSMISSION CONTROL RELAY

DESCRIPTION

The transmission control relay is located in the Power Distribution Center (PDC) on the left side of the engine compartment between the brake master cylinder and the air cleaner assembly (Fig. 326) .

OPERATION

The relay is supplied fused B+ voltage, energized by the PCM/TCM, and is used to supply power to the solenoid pack when the transmission is in normal operating mode. When the relay is “off”, no power is supplied to the solenoid pack and the transmission is in “limp-in” mode. After a controller reset (ignition key turned to the “run” position or after cranking engine), the PCM/TCM energizes the relay. Prior to this, the PCM/TCM verifies that the contacts are open by checking for no voltage at the switched battery terminals. After this is verified, the voltage at the solenoid pack pressure switches is checked. After the relay is energized, the PCM/TCM monitors the terminals to verify that the voltage is greater than 3 volts.

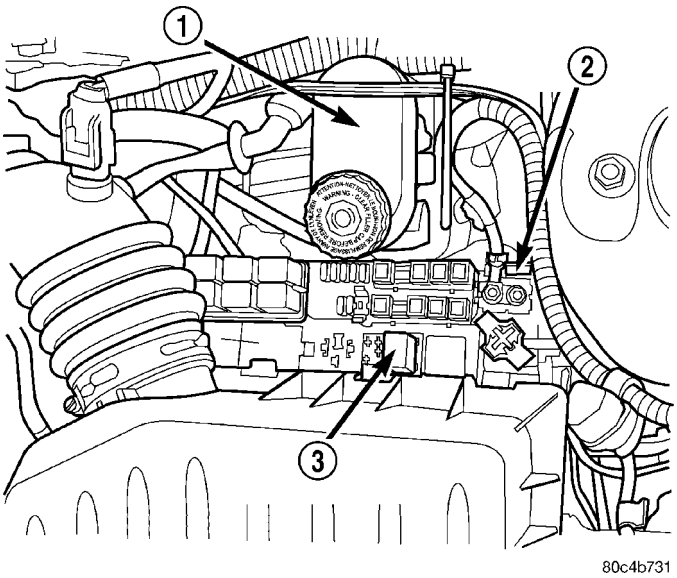

Fig. 326 Transmission Control Relay Location

1 - MASTER CYLINDER
2 - POWER DISTRIBUTION CENTER (PDC)
3 - TRANSMISSION CONTROL RELAY

TRANSMISSION RANGE SENSOR

DESCRIPTION

The Transmission Range Sensor (TRS) is mounted to the top of the valve body inside the transaxle and can only be serviced by removing the valve body. The electrical connector extends through the transaxle case (Fig. 327).

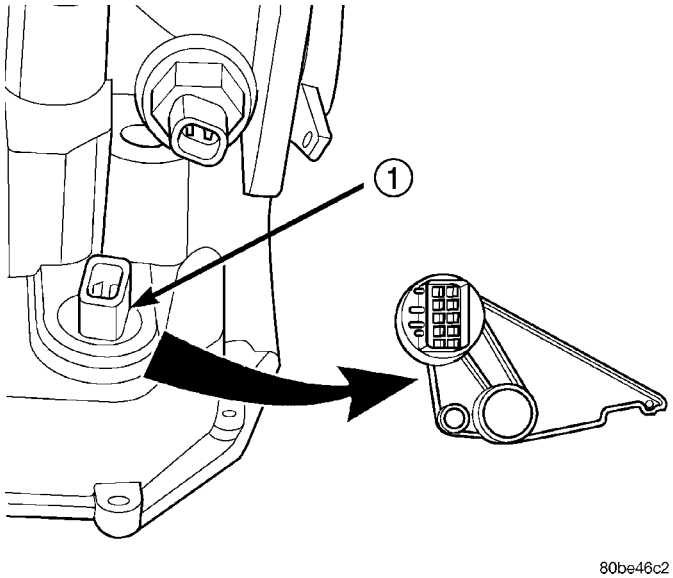

Fig. 327 Transmission Range Sensor (TRS) Location

1 - TRANSMISSION RANGE SENSOR

TRANSMISSION RANGE SENSOR (Continued)

The Transmission Range Sensor (TRS) has four switch contacts that monitor shift lever position and send the information to the PCM/TCM.

The TRS also has an integrated temperature sensor (thermistor) that communicates transaxle temperature to the TCM and PCM (Fig. 328).

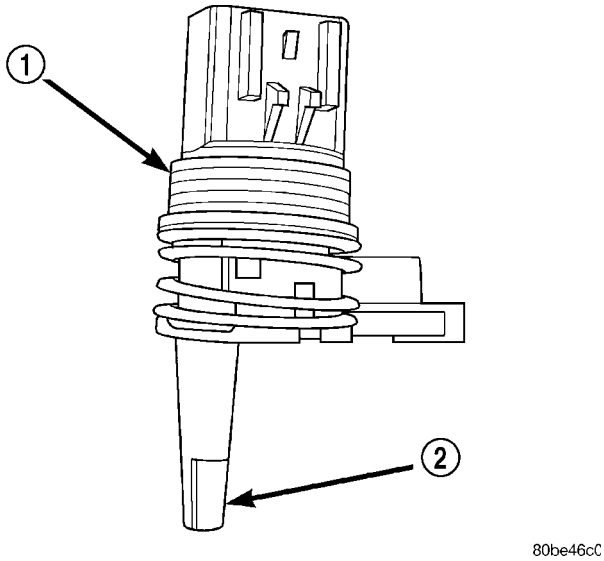

Fig. 328 Transmission Temperature Sensor

1 - TRANSMISSION RANGE SENSOR
2 - TEMPERATURE SENSOR

OPERATION

The Transmission Range Sensor (TRS) (Fig. 327) communicates shift lever position (SLP) to the PCM/TCM as a combination of open and closed switches. Each shift lever position has an assigned combination of switch states (open/closed) that the PCM/TCM receives from four sense circuits. The PCM/TCM interprets this information and determines the appropriate transaxle gear position and shift schedule.

Since there are four switches, there are 16 possible combinations of open and closed switches (codes). Seven of these codes are related to gear position and three are recognized as “between gear” codes. This results in six codes which should never occur. These are called “invalid” codes. An invalid code will result in a DTC, and the PCM/TCM will then determine the shift lever position based on pressure switch data. This allows reasonably normal transmission operation with a TRS failure.

TRS SWITCH STATES

SLP	T42	T41	T3	T1
P	CL	CL	CL	OP
R	CL	OP	OP	OP
N	CL	CL	OP	CL
OD	OP	OP	OP	CL
3	OP	OP	CL	OP
L	CL	OP	CL	CL

TRANSMISSION TEMPERATURE SENSOR

The TRS has an integrated thermistor (Fig. 328) that the PCM/TCM uses to monitor the transmission’s sump temperature. Since fluid temperature can affect transmission shift quality and convertor lock up, the PCM/TCM requires this information to determine which shift schedule to operate in. The PCM also monitors this temperature data so it can energize the vehicle cooling fan(s) when a transmission “overheat” condition exists. If the thermistor circuit fails, the PCM/TCM will revert to calculated oil temperature usage.

CALCULATED TEMPERATURE

A failure in the temperature sensor or circuit will result in calculated temperature being substituted for actual temperature. Calculated temperature is a predicted fluid temperature which is calculated from a combination of inputs:

- Battery (ambient) temperature
- Engine coolant temperature
- In-gear run time since start-up

VALVE BODY

DESCRIPTION

The valve body assembly consists of a cast aluminum valve body, a separator plate, and transfer plate. The valve body contains valves and check balls that control fluid delivery to the torque converter clutch, solenoid/pressure switch assembly, and frictional clutches. The valve body contains the following components (Fig. 329):

- Regulator valve
- Solenoid switch valve
- Manual valve
- Converter clutch switch valve
- Converter clutch control valve
- Torque converter regulator valve
- Low/Reverse switch valve

In addition, the valve body also contains the thermal valve, #2,3&4 check balls, the #5 (overdrive) check valve and the 2/4 accumulator assembly. (Refer to 21 - TRANSMISSION/TRANSAXLE/AUTOMATIC - 41TE/VALVE BODY - DISASSEMBLY)

OPERATION

NOTE: Refer to the Hydraulic Schematics for a visual aid in determining valve location, operation and design.

REGULATOR VALVE

The regulator valve controls hydraulic pressure in the transaxle. It receives unregulated pressure from the pump, which works against spring tension to maintain oil at specific pressures. A system of sleeves and ports allows the regulator valve to work at one of three predetermined pressure levels. Regulated oil pressure is also referred to as “line pressure.”

SOLENOID SWITCH VALVE

The solenoid switch valve controls line pressure from the LR/CC solenoid. In one position, it allows the low/reverse clutch to be pressurized. In the other, it directs line pressure to the converter control and converter clutch valves.

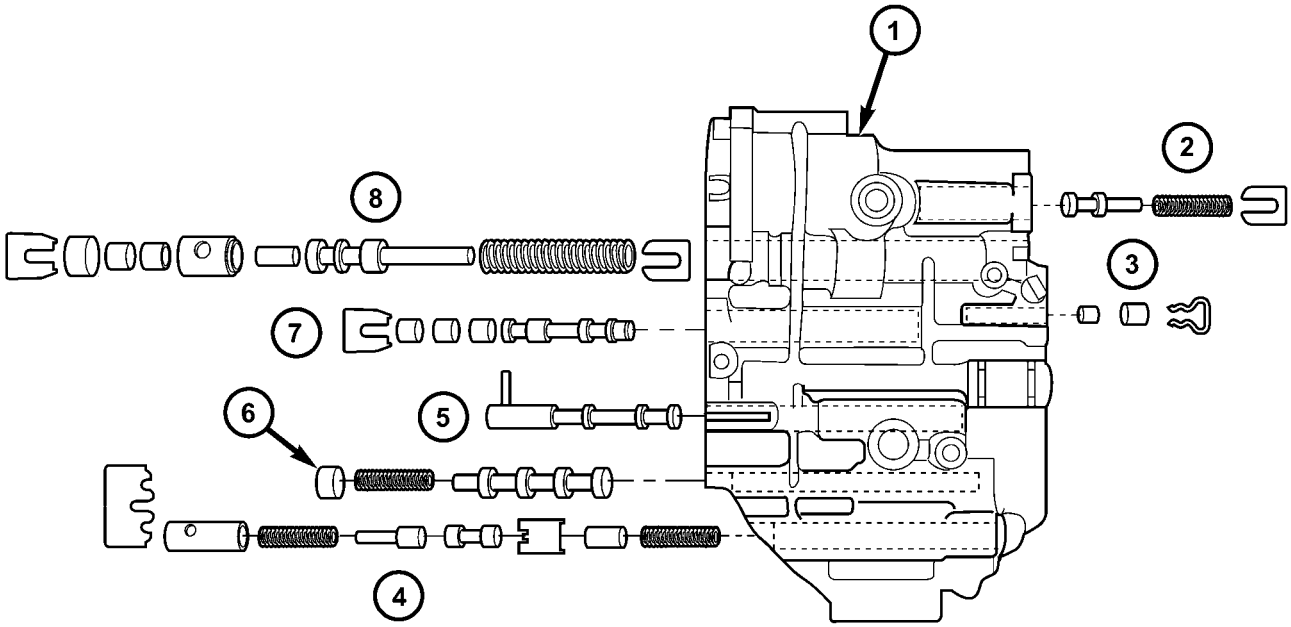

Fig. 329 Valve Body Assembly

1 - VALVE BODY
2 - T/C REGULATOR VALVE
3 - L/R SWITCH VALVE
4 - CONVERTER CLUTCH CONTROL VALVE
5 - MANUAL VALVE
6 - CONVERTER CLUTCH SWITCH VALVE
7 - SOLENOID SWITCH VALVE
8 - REGULATOR VALVE

VALVE BODY (Continued)

MANUAL VALVE

The manual valve is operated by the mechanical shift linkage. Its primary responsibility is to send line pressure to the appropriate hydraulic circuits and solenoids. The valve has three operating ranges or positions.

CONVERTER CLUTCH SWITCH VALVE

The main responsibility of the converter clutch switch valve is to control hydraulic pressure applied to the front (off) side of the converter clutch piston. Line pressure from the regulator valve is fed to the torque converter regulator valve, where it passes through the valve, and is slightly regulated. The pressure is then directed to the converter clutch switch valve and to the front side of the converter clutch piston. This pressure pushes the piston back and disengages the converter clutch.

CONVERTER CLUTCH CONTROL VALVE

The converter clutch control valve controls the back (on) side of the torque converter clutch. When the PCM/TCM energizes or modulates the LR/CC solenoid to apply the converter clutch piston, both the converter clutch control valve and the converter control valve move, allowing pressure to be applied to the back side of the clutch.

T/C REGULATOR VALVE

The torque converter regulator valve slightly regulates the flow of fluid to the torque converter.

LOW/REVERSE SWITCH VALVE

The low/reverse clutch is applied from different sources, depending on whether low (1st) gear or reverse is selected. The low/reverse switch valve alternates positions depending on from which direction fluid pressure is applied. By design, when the valve is shifted by fluid pressure from one channel, the opposing channel is blocked. The switch valve alienates the possibility of a sticking ball check, thus providing consistent application of the low/reverse clutch under all operating conditions.

REMOVAL

(1) Disconnect the battery cables.

(2) Remove air cleaner assembly (Fig. 330).

(3) Remove the battery hold down clamp and remove the battery (Fig. 331).

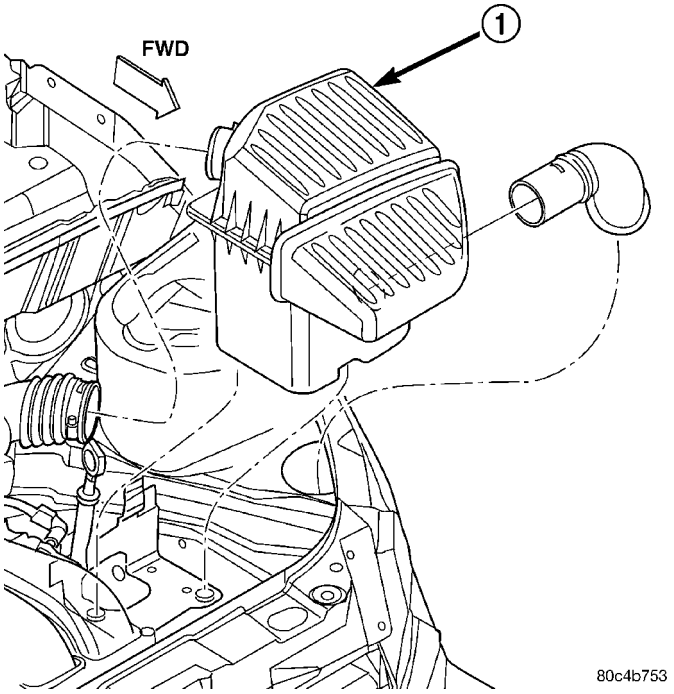

Fig. 330 Air Cleaner Assembly Removal/Installation

1 - AIR CLEANER ASSEMBLY

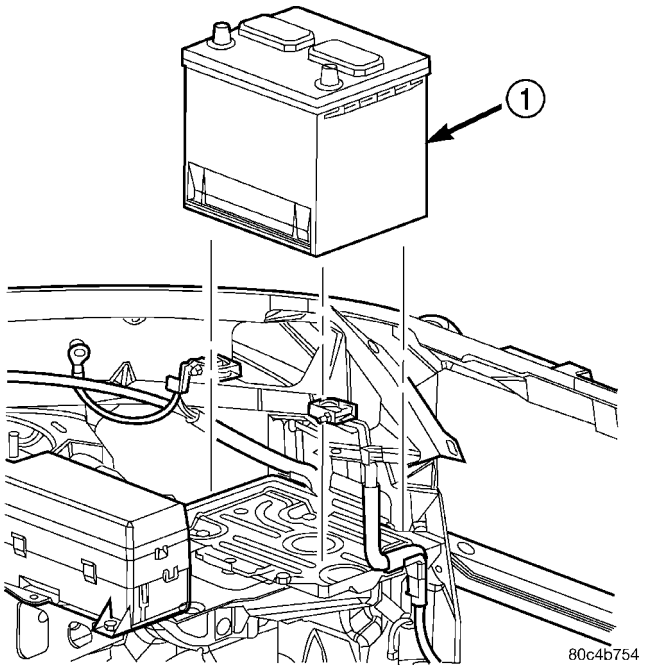

Fig. 331 Battery Removal/Installation

1 - BATTERY

VALVE BODY (Continued)

(4) Remove the battery tray (Fig. 332).

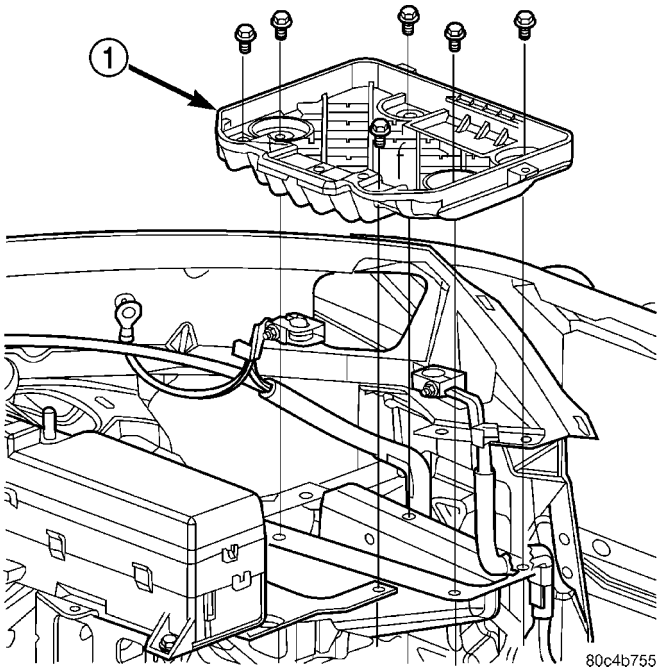

Fig. 332 Battery Tray Removal/Installation

1 - BATTERY TRAY

(5) Disconnect gearshift cable from manual valve lever (Fig. 333).

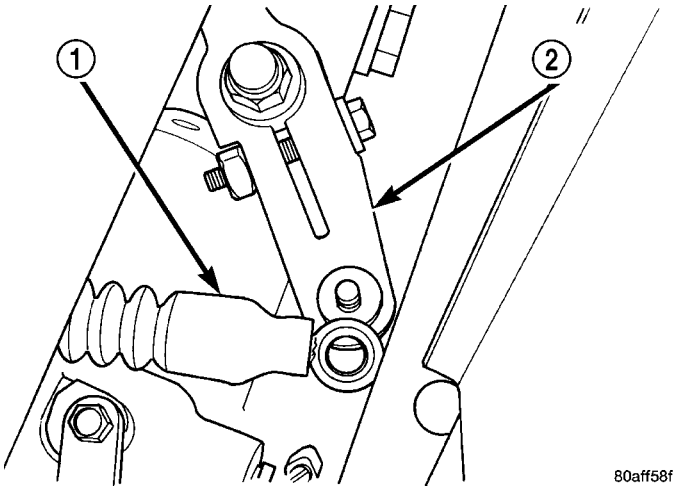

Fig. 333 Gearshift Cable at Manual Valve Lever

1 - GEARSHIFT CABLE
2 - MANUAL VALVE LEVER

(6) Remove manual valve lever from manual shaft.
(7) Raise vehicle on hoist.
(8) Remove oil pan bolts (Fig. 334).

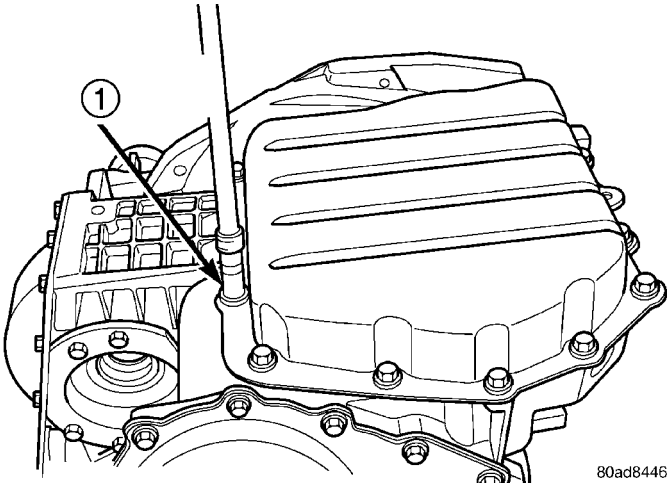

Fig. 334 Oil Pan Bolts

1 - OIL PAN BOLTS (USE RTV UNDER BOLT HEADS)

(9) Remove oil pan (Fig. 335).

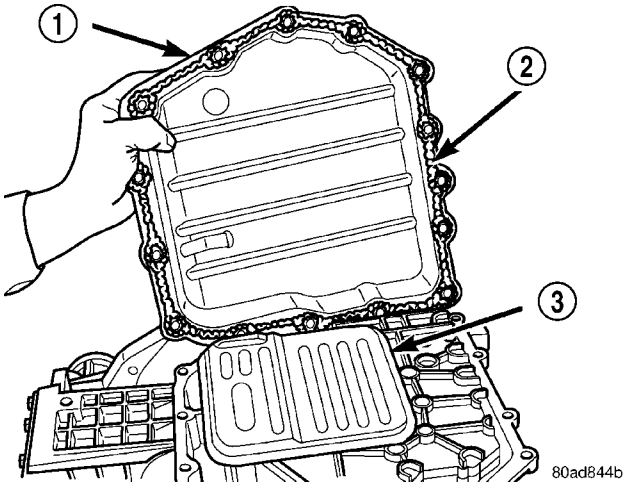

Fig. 335 Oil Pan

1 - OIL PAN
2 - 1/8 INCH BEAD OF RTV SEALANT
3 - OIL FILTER

VALVE BODY (Continued)

(10) Remove oil filter (Fig. 336).

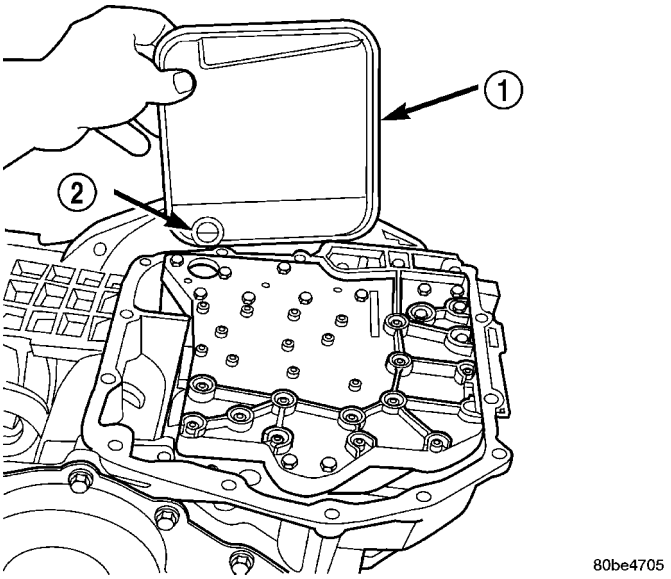

Fig. 336 Oil Filter

1 - OIL FILTER
2 - O-RING

(11) Remove the valve body-to-transaxle case bolts (Fig. 337).

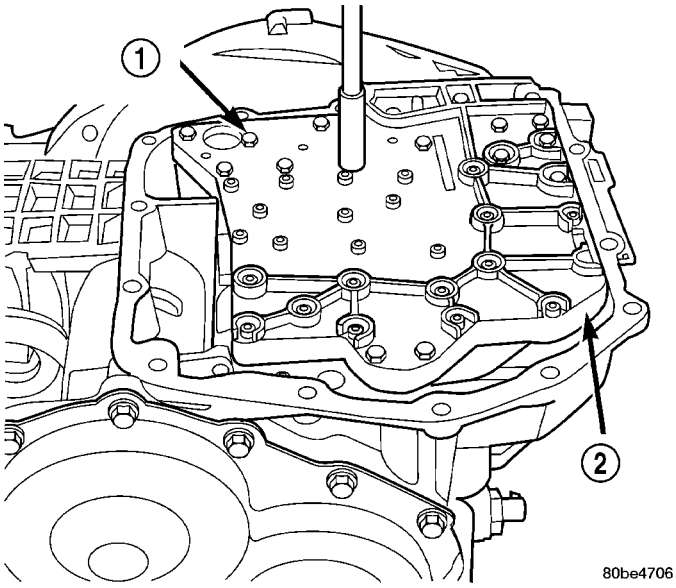

Fig. 337 Valve Body Attaching Bolts

1 - VALVE BODY ATTACHING BOLTS (18)
2 - VALVE BODY

NOTE: To ease removal of the valve body, turn the manual valve lever fully clockwise to low or first gear.

(12) Remove park rod rollers from guide bracket and remove valve body from transaxle (Fig. 338) (Fig. 339).

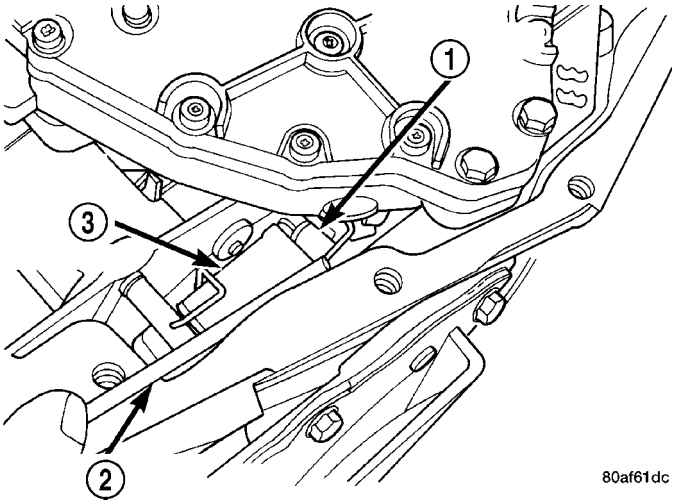

Fig. 338 Push Park Rod Rollers from Guide Bracket

1 - PARK SPRAG ROLLERS
2 - SCREWDRIVER
3 - PARK SPRAG GUIDE BRACKET

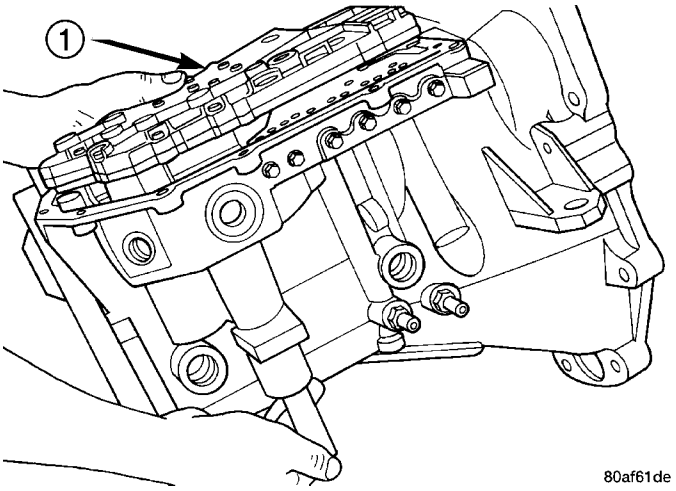

Fig. 339 Valve Body Removal/Installation

1 - VALVE BODY

CAUTION: The valve body manual shaft pilot may distort and bind the manual valve if the valve body is mishandled or dropped.

VALVE BODY (Continued)

DISASSEMBLY

NOTE: If valve body assembly is being reconditioned, the PCM/TCM Quick Learn Procedure must be performed. (Refer to 8 - ELECTRICAL/ELECTRONIC CONTROL MODULES/TRANSMISSION CONTROL MODULE - STANDARD PROCEDURE)

(1) Remove manual shaft seal (Fig. 340).

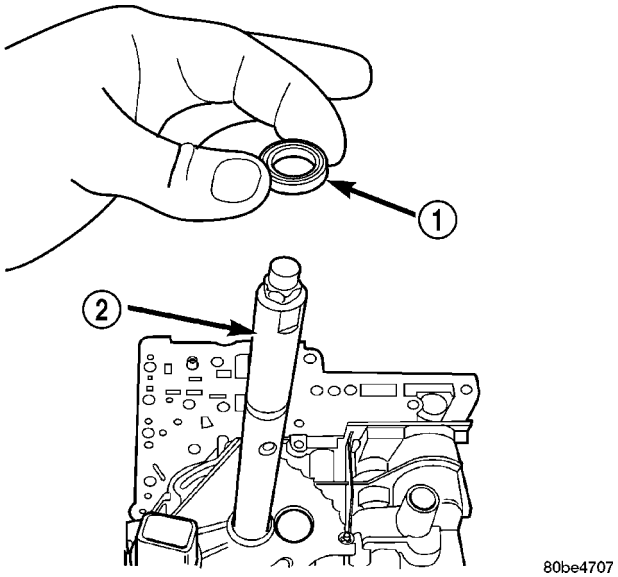

Fig. 340 Manual Shaft Seal

1 - SEAL
2 - MANUAL SHAFT

(2) Remove Transmission Range Sensor retaining screw (Fig. 341).

(3) Remove Manual Shaft/Rooster Comb and Transmission Range Sensor (Fig. 342).

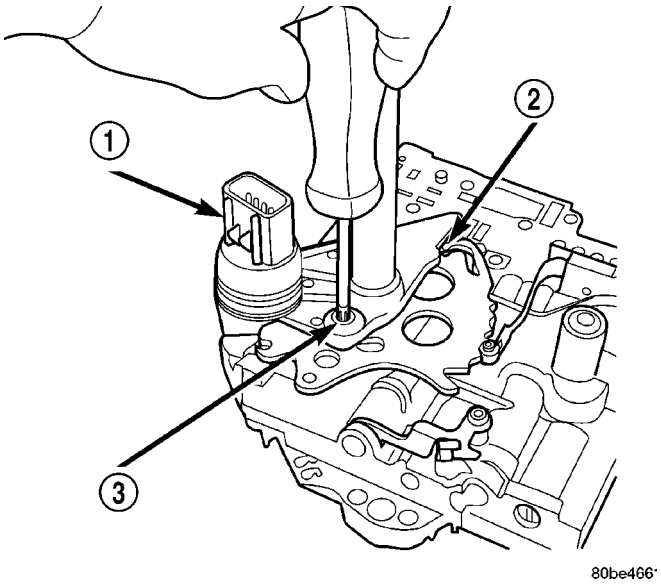

Fig. 341 Remove Transmission Range Sensor

1 - TRANSMISSION RANGE SENSOR
2 - MANUAL VALVE CONTROL PIN
3 - RETAINING SCREW

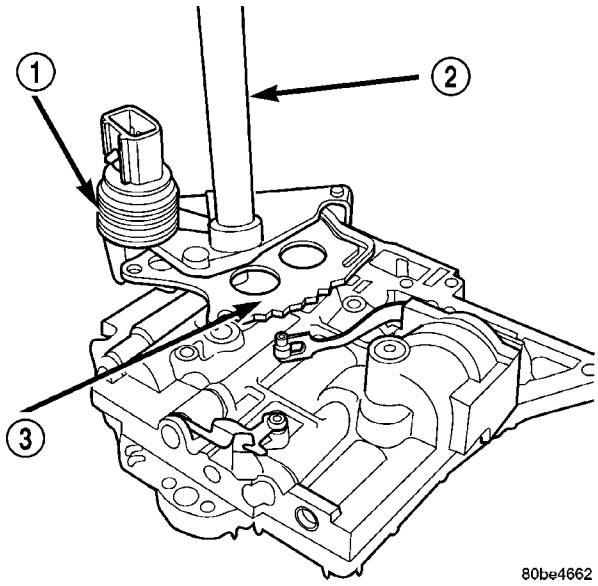

Fig. 342 Manual Shaft/Rooster Comb and Transmission Range Sensor

1 - TRANSMISSION RANGE SENSOR
2 - MANUAL SHAFT
3 - ROOSTER COMB

VALVE BODY (Continued)

(4) Remove 2/4 Accumulator Retaining Plate (Fig. 343).

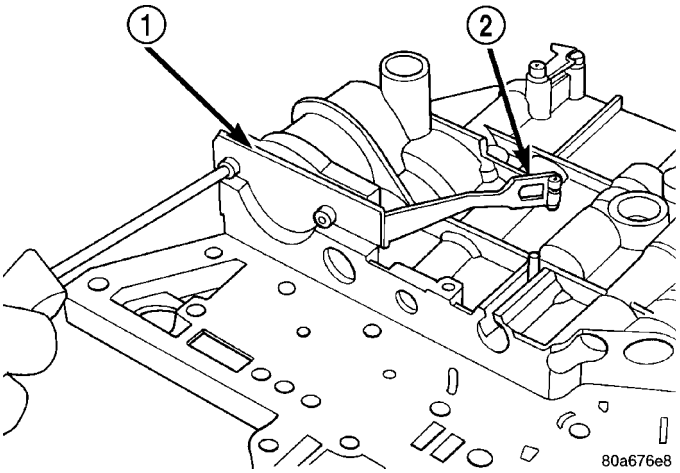

Fig. 343 2/4 Accumulator Retaining Plate

1 - 2–4 ACCUMULATOR RETAINING PLATE
2 - DETENT SPRING

(5) Remove 2/4 Accumulator components as shown in (Fig. 344).

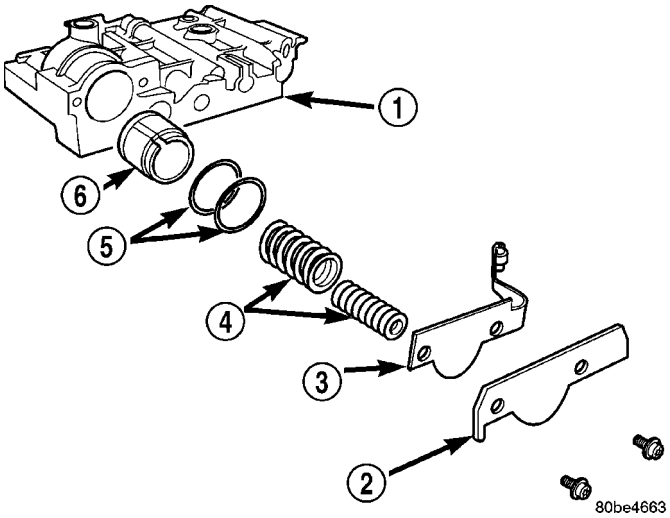

Fig. 344 2/4 Accumulator Assembly

1 - VALVE BODY
2 - RETAINER PLATE
3 - DETENT SPRING
4 - SPRINGS
5 - SEALS
6 - PISTON

(6) Remove Valve Body to Transfer Plate screws (Fig. 345).

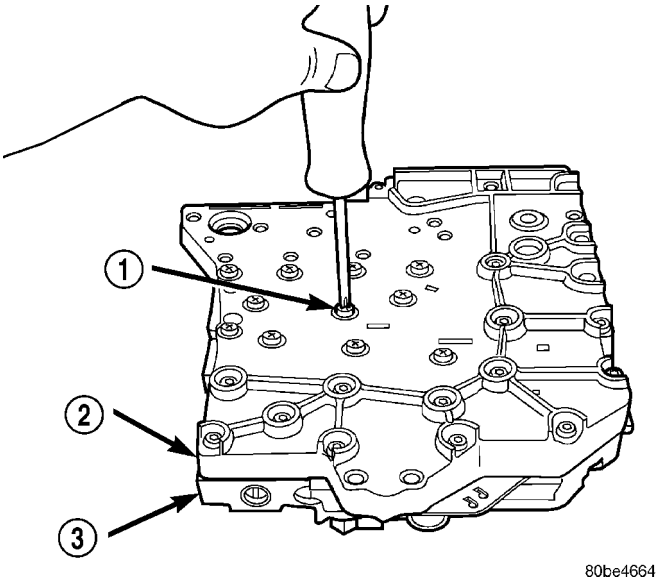

Fig. 345 Remove Valve Body to Transfer Plate Screws

1 - SCREW (24)
2 - TRANSFER PLATE
3 - VALVE BODY

(7) Invert assembly and remove Transfer Plate (Fig. 346). Beware of loose check balls.

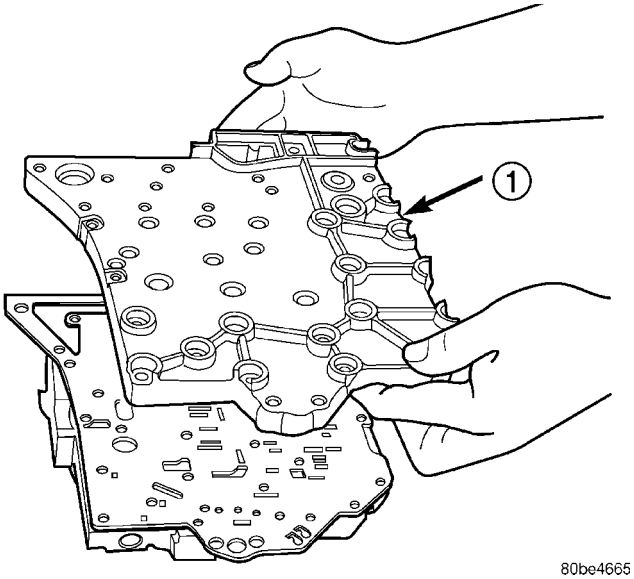

Fig. 346 Remove Transfer Plate

1 - TRANSFER PLATE

VALVE BODY (Continued)

(8) Remove oil screen (Fig. 347).

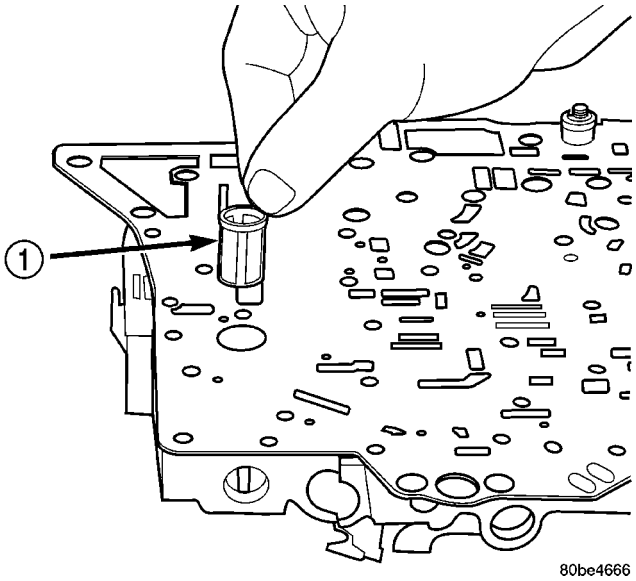

Fig. 347 Remove Oil Screen

1 - OIL SCREEN

(9) Remove the overdrive clutch (#5) check valve (Fig. 348)

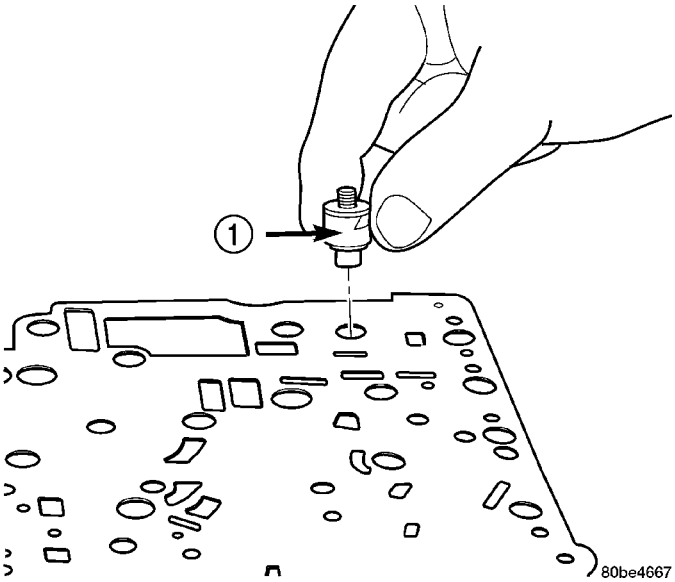

Fig. 348 Remove Overdrive Clutch (#5) Check Valve

1 - OVERDRIVE CLUTCH (#5) CHECK VALVE

(10) Remove separator plate (Fig. 349).

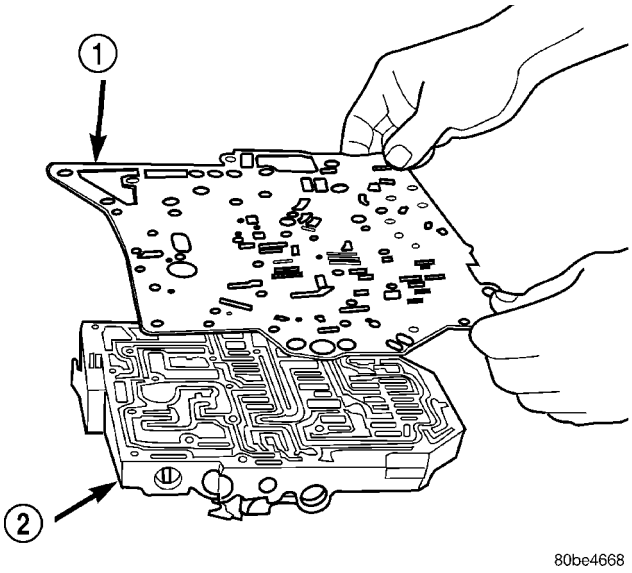

Fig. 349 Remove Separator Plate

1 - SEPARATOR PLATE
2 - VALVE BODY

(11) Remove thermal valve (Fig. 350).

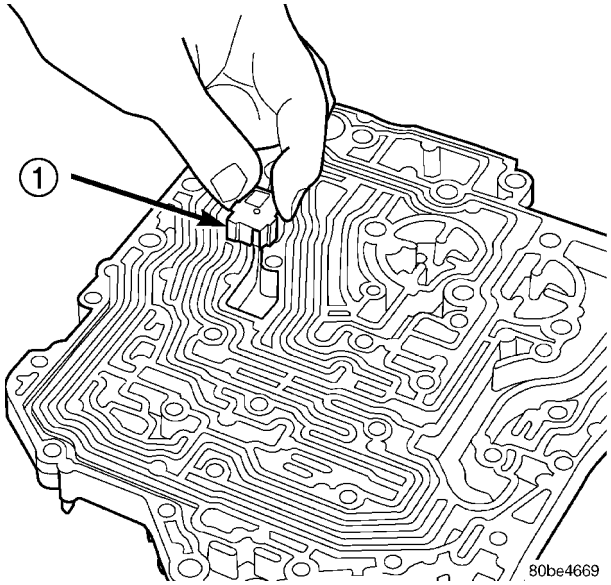

Fig. 350 Remove Thermal Valve

1 - THERMAL VALVE

VALVE BODY (Continued)

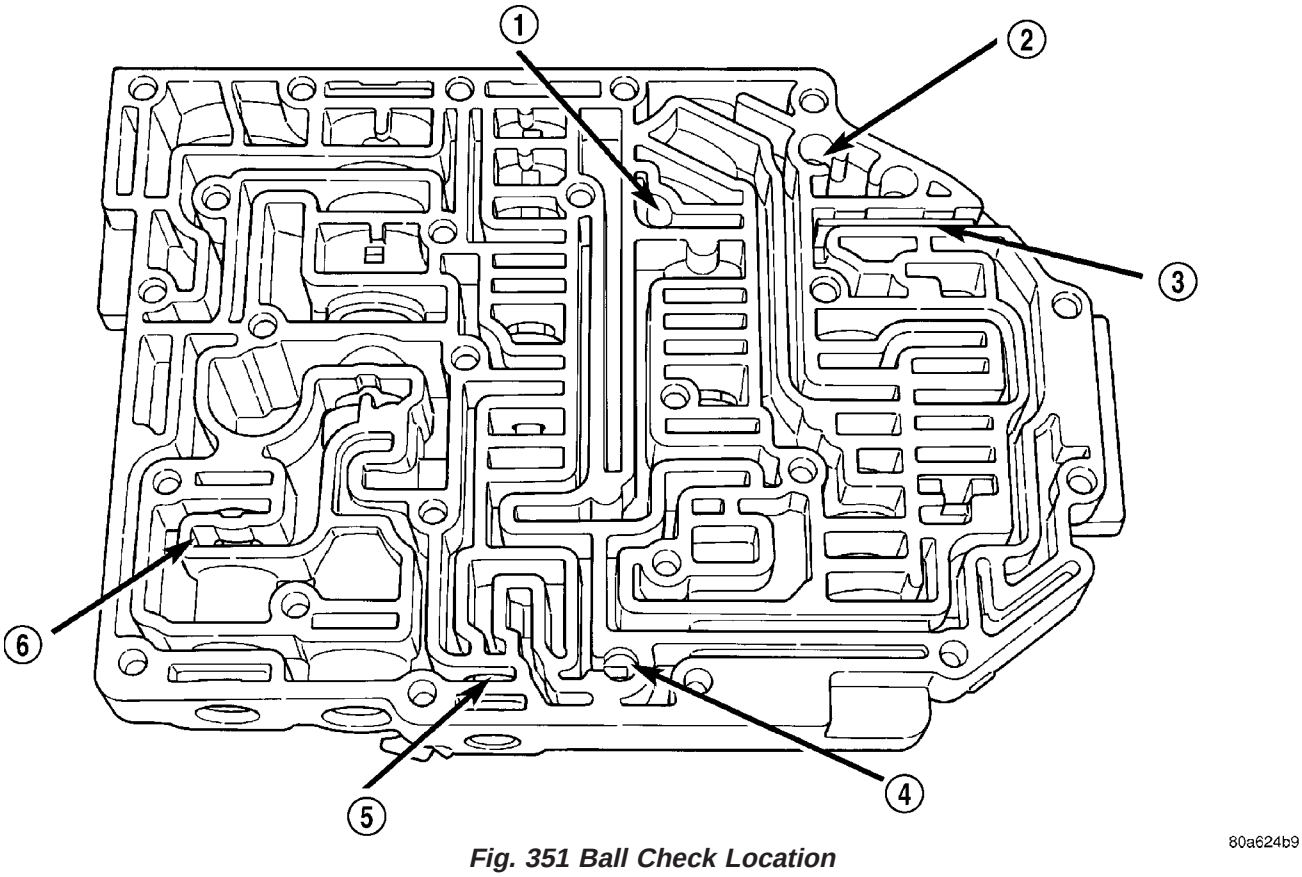

Fig. 351 Ball Check Location

1 - (#4) BALL CHECK LOCATION
2 - (#2) BALL CHECK LOCATION
3 - RETAINER
4 - (#3) BALL CHECK LOCATION
5 - LOW/REVERSE SWITCH VALVE
6 - T/C LIMIT VALVE

(12) Remove check balls (Fig. 351).

NOTE: Tag all valve/spring assemblies for reassembly identification.

(13) Remove dual retainer plate using Tool 6301 (Fig. 352).

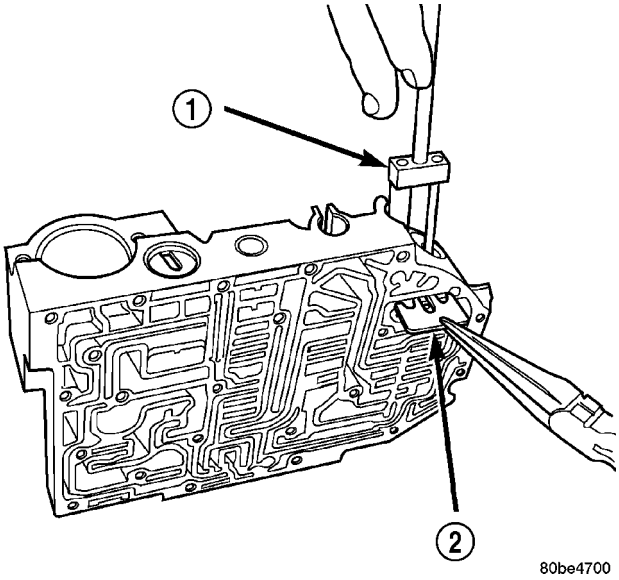

Fig. 352 Remove Dual Retainer Plate using Tool 6301

1 - TOOL 6301
2 - RETAINER

VALVE BODY (Continued)

(14) Remove regulator valve spring retainer (Fig. 353).

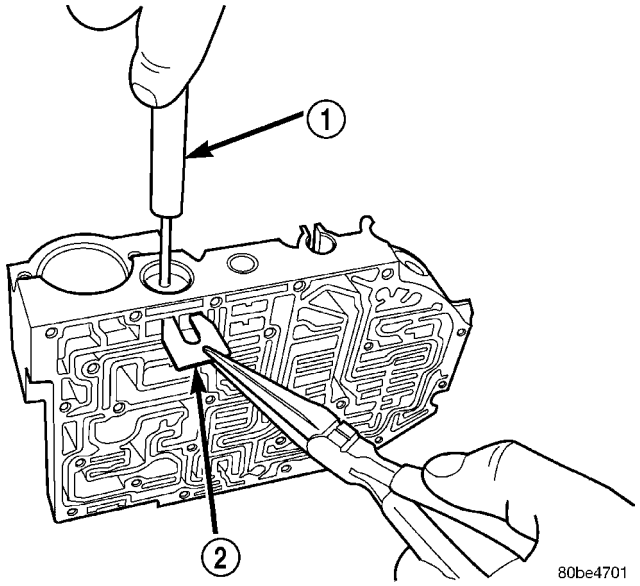

Fig. 353 Remove Regulator Valve Spring Retainer using Tool 6302

1 - TOOL 6302
2 - RETAINER

(15) Remove remaining retainers as shown in (Fig. 354).

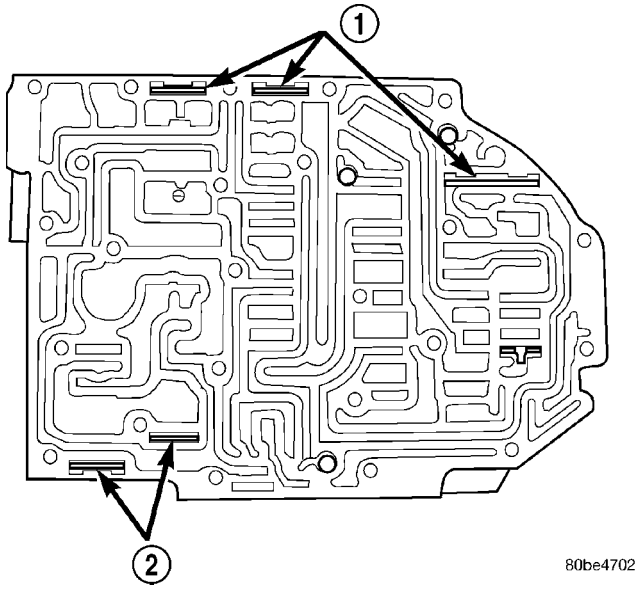

Fig. 354 Valve Retainer Location

1 - RETAINER
2 - RETAINER

(16) Remove valves and springs as shown in (Fig. 355).

NOTE: Refer to Valve Body Cleaning and Inspection for cleaning procedures.

ASSEMBLY

NOTE: If valve body assembly is reconditioned, the PCM/TCM Quick Learn Procedure must be performed. (Refer to 8 - ELECTRICAL/ELECTRONIC CONTROL MODULES/TRANSMISSION CONTROL MODULE - STANDARD PROCEDURE)

(1) Install valves and springs as shown in (Fig. 355).
(2) Install regulator valve spring retainer (Fig. 356).
(3) Install dual retainer plate using Tool 6301 (Fig. 357).

VALVE BODY (Continued)

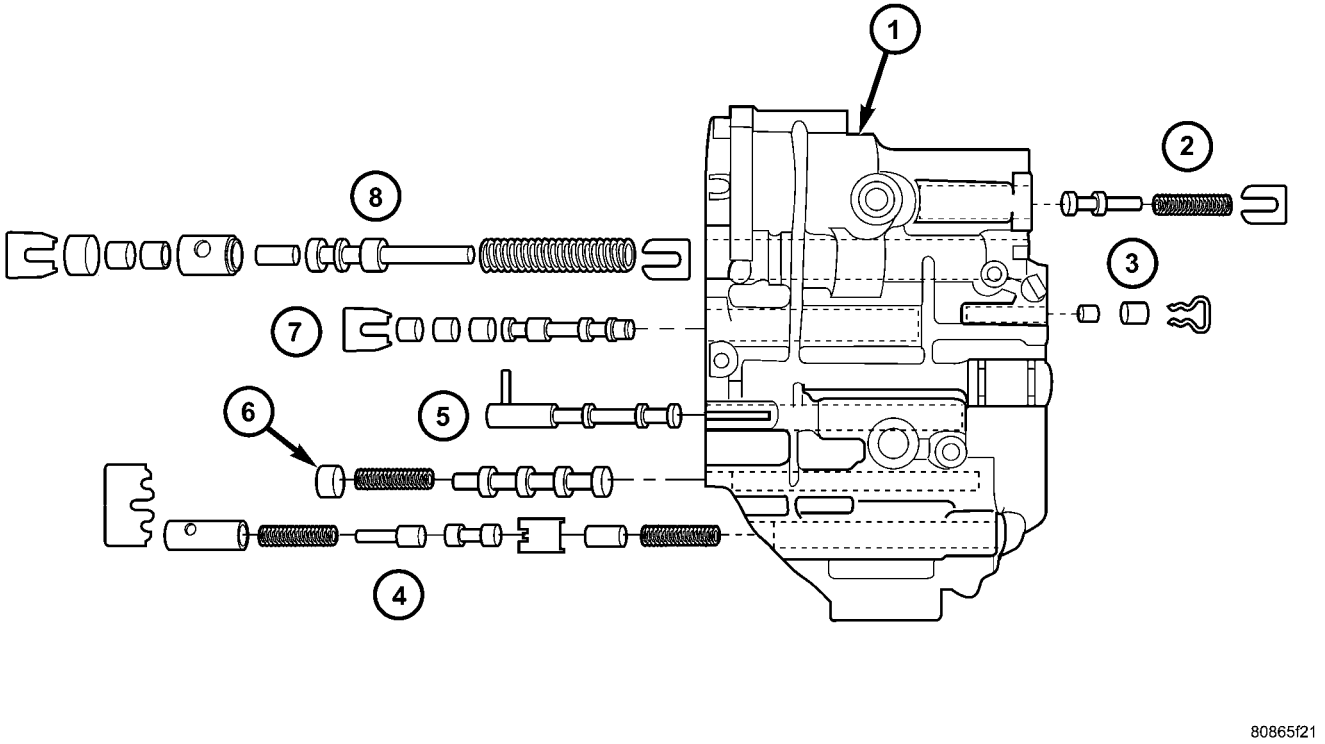

Fig. 355 Springs and Valves Location

1 - VALVE BODY
2 - T/C REGULATOR VALVE
3 - L/R SWITCH VALVE
4 - CONVERTER CLUTCH CONTROL VALVE
5 - MANUAL VALVE
6 - CONVERTER CLUTCH SWITCH VALVE
7 - SOLENOID SWITCH VALVE
8 - REGULATOR VALVE

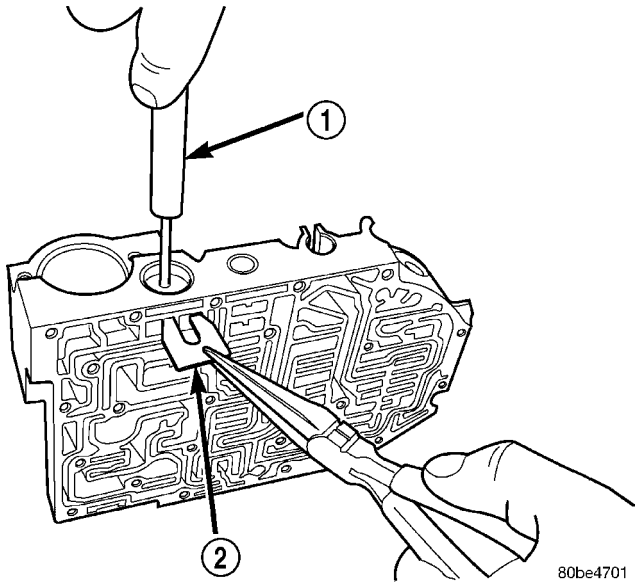

Fig. 356 Install Regulator Valve Spring Retainer using Tool 6302

1 - TOOL 6302
2 - RETAINER

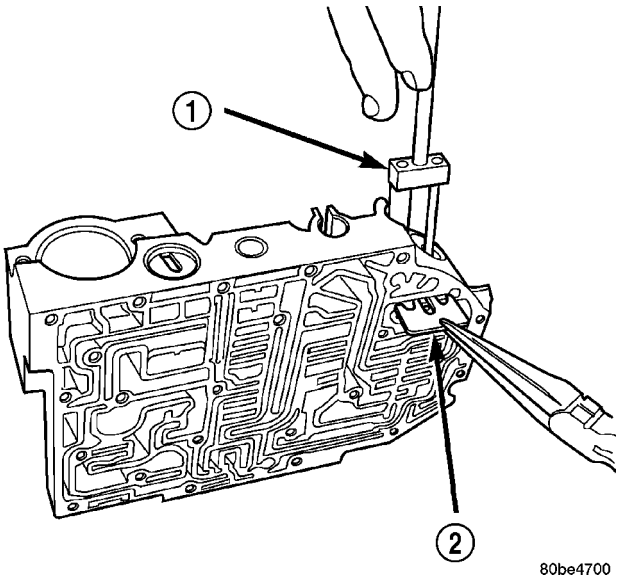

Fig. 357 Install Dual Retainer Plate using Tool 6301

1 - TOOL 6301
2 - RETAINER

VALVE BODY (Continued)

(4) Verify that all retainers are installed as shown in (Fig. 358). Retainers should be flush or below valve body surface.

(5) Install check balls into position as shown in (Fig. 359). If necessary, secure them with petrolatum or transmission assembly gel for assembly ease.

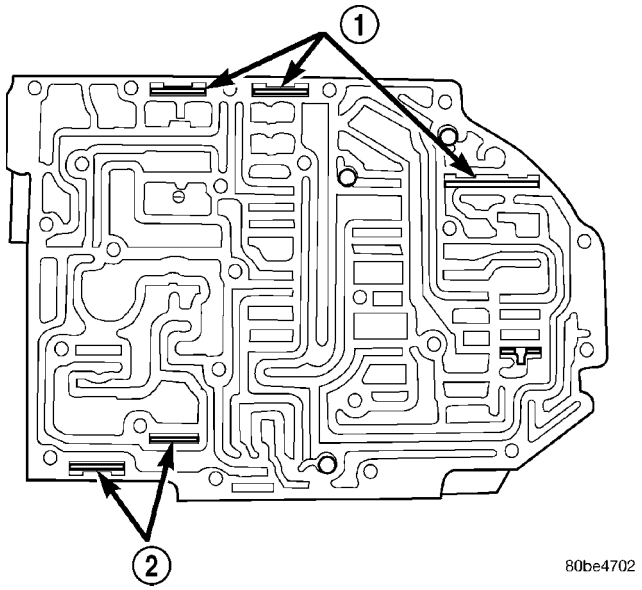

Fig. 358 Valve Retainer Location

1 - RETAINER
2 - RETAINER

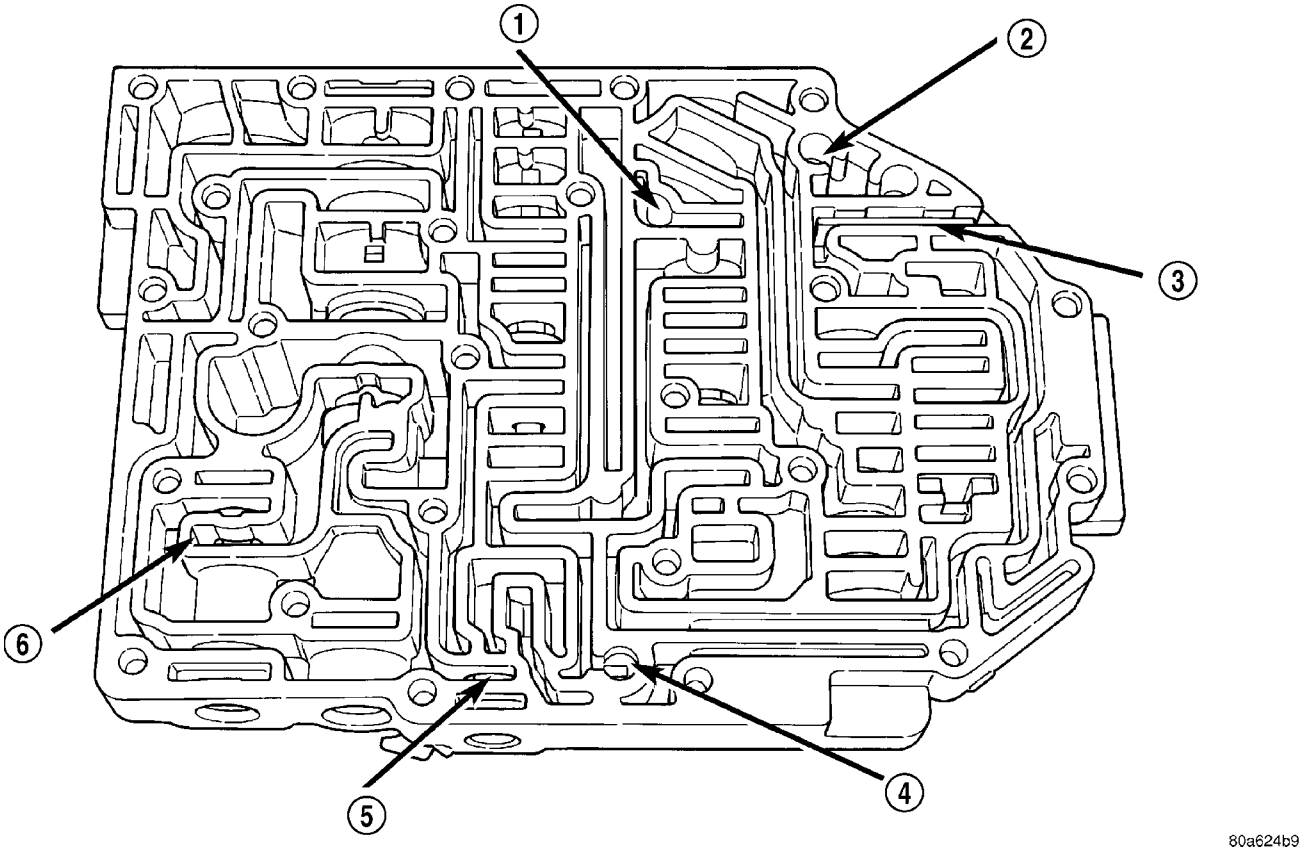

Fig. 359 Ball Check Location

1 - (#4) BALL CHECK LOCATION
2 - (#2) BALL CHECK LOCATION
3 - RETAINER
4 - (#3) BALL CHECK LOCATION
5 - LOW/REVERSE SWITCH VALVE
6 - T/C LIMIT VALVE

VALVE BODY (Continued)

(6) Install thermal valve into transfer plate (Fig. 360).

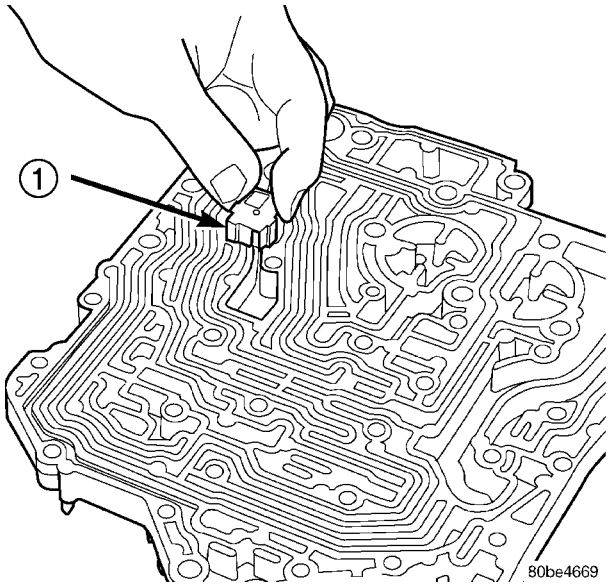

Fig. 360 Install Thermal Valve

1 - THERMAL VALVE

(7) Install separator plate to valve body (Fig. 361).

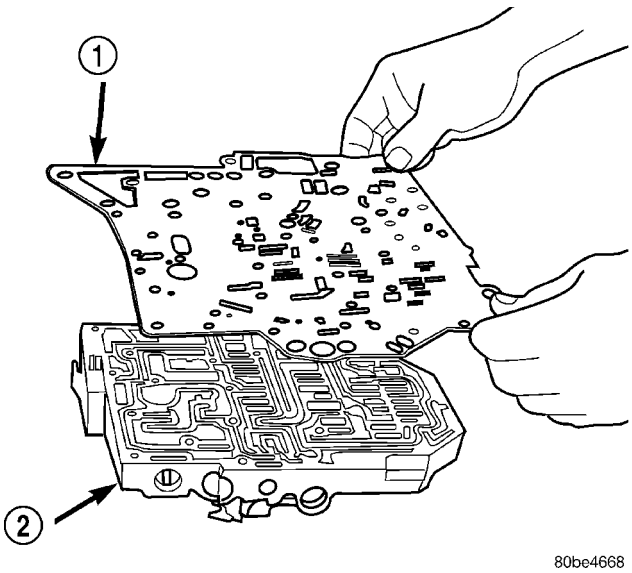

Fig. 361 Install Separator Plate

1 - SEPARATOR PLATE
2 - VALVE BODY

(8) Install the overdrive clutch (#5) check valve to separator plate (Fig. 362)

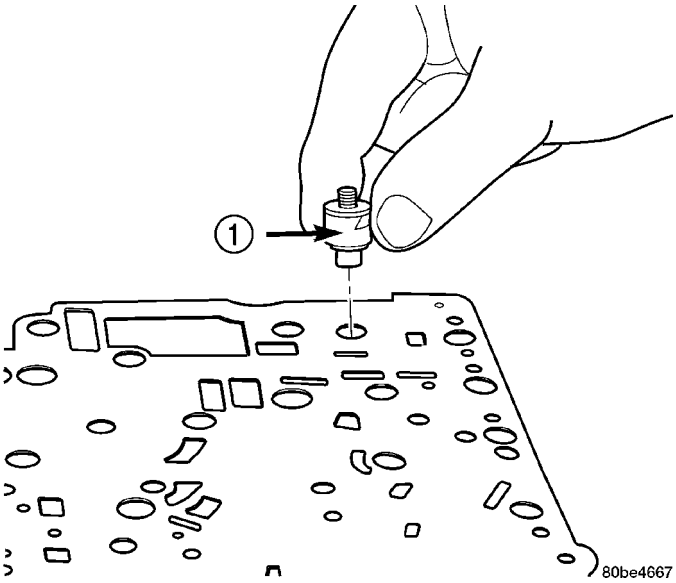

Fig. 362 Install Overdrive Clutch (#5) Check Valve

1 - OVERDRIVE CLUTCH (#5) CHECK VALVE

(9) Install oil screen to separator plate (Fig. 363).

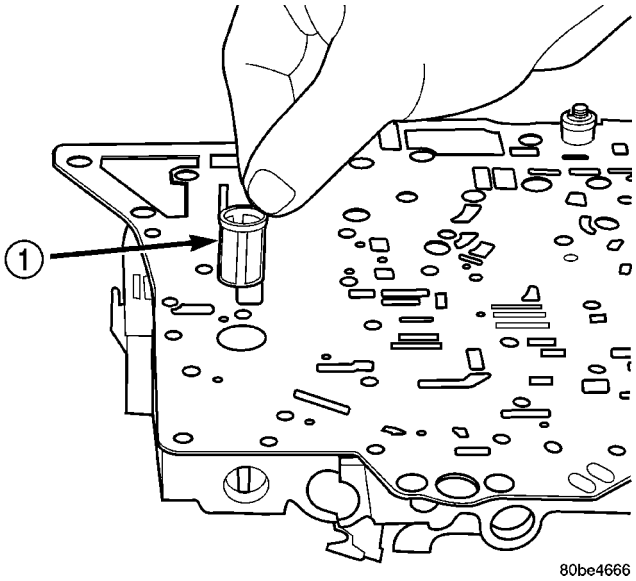

Fig. 363 Install Oil Screen

1 - OIL SCREEN

VALVE BODY (Continued)

(10) Install transfer plate to valve body and separator plate. Make sure oil screen and #5 check valve do not bind (Fig. 364).

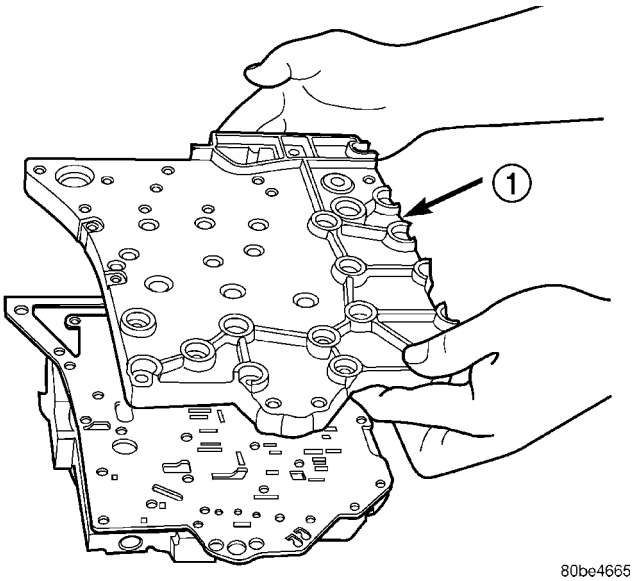

Fig. 364 Install Transfer Plate

1 - TRANSFER PLATE

(11) Install twenty-four transfer plate to valve body screws (Fig. 365) and torque to 5 N·m (45 in. lbs.).

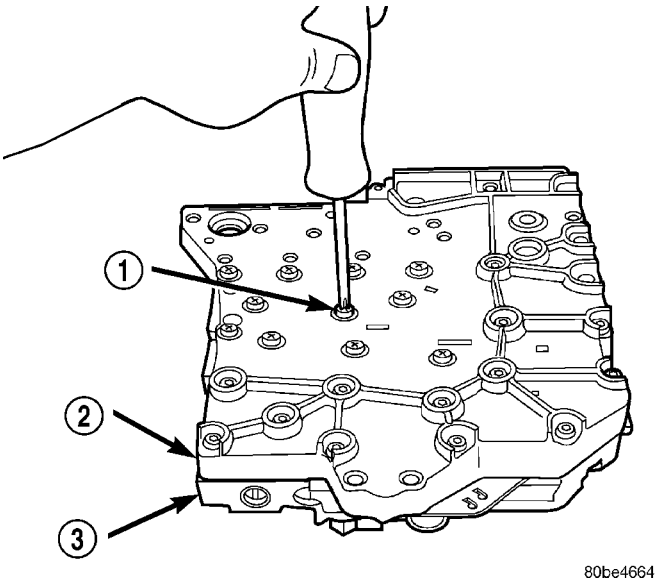

Fig. 365 Install Valve Body to Transfer Plate Screws

1 - SCREW (24)
2 - TRANSFER PLATE
3 - VALVE BODY

(12) Install 2/4 Accumulator components as shown in (Fig. 366).

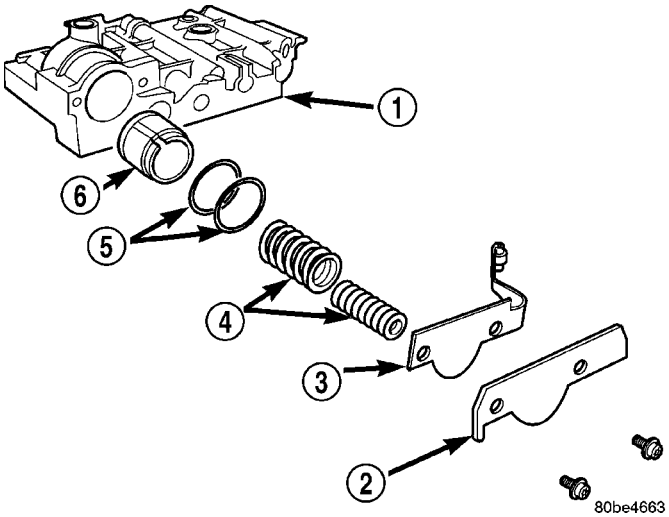

Fig. 366 2/4 Accumulator Assembly

1 - VALVE BODY
2 - RETAINER PLATE
3 - DETENT SPRING
4 - SPRINGS
5 - SEALS
6 - PISTON

(13) Torque 2/4 Accumulator retainer to 5 N·m (45 in. lbs.) (Fig. 367).

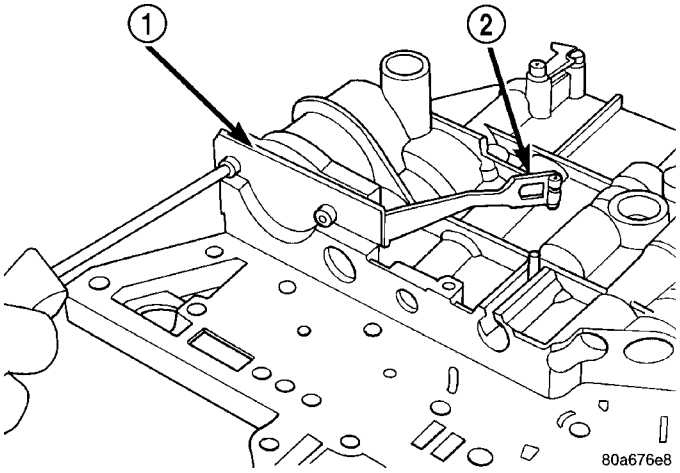

Fig. 367 2/4 Accumulator Retaining Plate

1 - 2–4 ACCUMULATOR RETAINING PLATE
2 - DETENT SPRING

VALVE BODY (Continued)

(14) Install Manual Shaft/Rooster Comb and Transmission Range Sensor (Fig. 368).

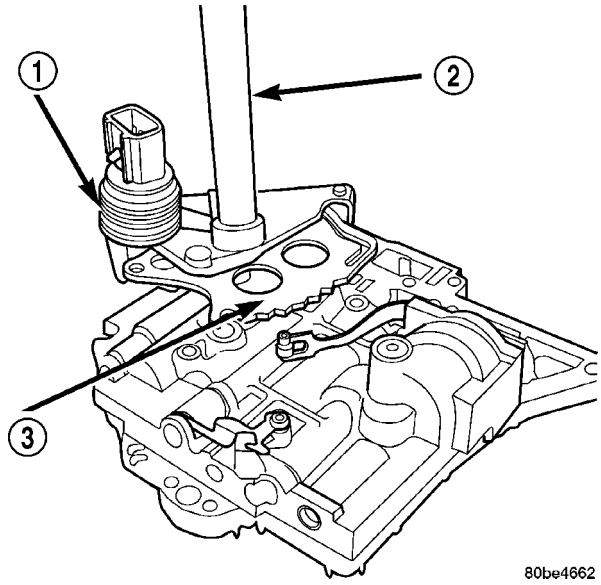

Fig. 368 Install Manual Shaft/Rooster Comb and Transmission Range Sensor

1 - TRANSMISSION RANGE SENSOR
2 - MANUAL SHAFT
3 - ROOSTER COMB

(15) Make sure Manual Valve control pin is contained within the rooster comb slot (Fig. 369). Install Transmission Range Sensor retaining screw (Fig. 369) and torque to 5 N·m (45 in. lbs.).

(16) Install manual shaft seal (Fig. 370).

INSTALLATION

NOTE: To ease installation of the valve body, turn the manual valve lever fully clockwise.

(1) Guide park rod rollers into guide bracket while installing valve body to the transaxle case (Fig. 338) (Fig. 339).

(2) Install the valve body-to-case bolts (Fig. 337)and torque to 12 N·m (105 in. lbs.).

(3) Install the oil filter (Fig. 336). Inspect the o-ring for damage and replace as necessary.

(4) Install an 1/8' bead of RTV as shown in (Fig. 335)and install pan to case.

(5) Install oil pan bolts (Fig. 334) and torque to 19 N·m (165 in. lbs.) torque.

(6) Lower vehicle.

(7) Install manual valve lever to manual shaft (Fig. 333).

(8) Install gearshift cable to manual valve lever (Fig. 333).

(9) Install the battery tray (Fig. 332).

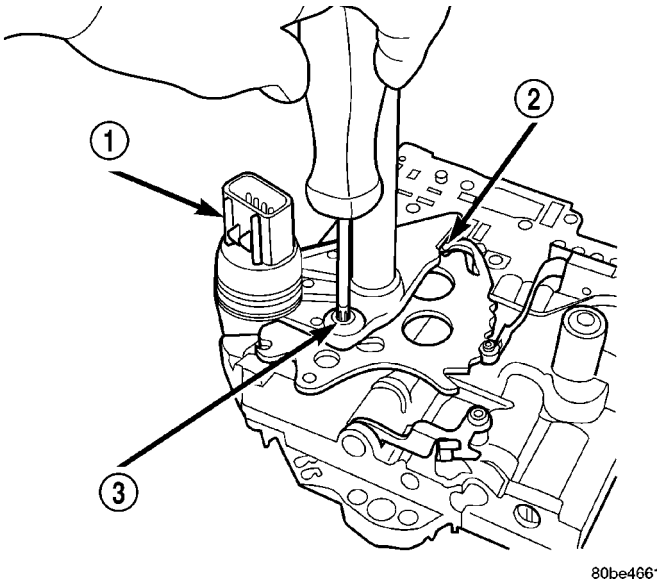

Fig. 369 Install Transmission Range Sensor Retaining Screw

1 - TRANSMISSION RANGE SENSOR
2 - MANUAL VALVE CONTROL PIN
3 - RETAINING SCREW

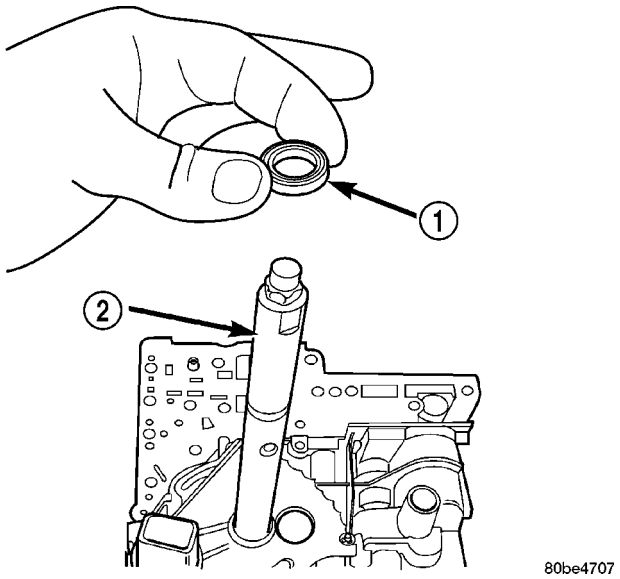

Fig. 370 Manual Shaft Seal

1 - SEAL
2 - MANUAL SHAFT

(10) Install the battery and hold down clamp (Fig. 331).

(11) Install air cleaner assembly (Fig. 330).

(12) Connect battery cables.

(13) Fill transaxle with fluid. Refer to SERVICE PROCEDURES for proper fluid fill procedure.

TIRES/WHEELS

TABLE OF CONTENTS

page

TIRES/WHEELS
DIAGNOSIS AND TESTING - TIRE AND WHEEL RUNOUT 1
STANDARD PROCEDURE
STANDARD PROCEDURE - TIRE AND WHEEL BALANCE 3
STANDARD PROCEDURE - TIRE AND WHEEL MATCH MOUNTING 4
STANDARD PROCEDURE - TIRE AND WHEEL ROTATION 6
REMOVAL
REMOVAL - TIRE AND WHEEL ASSEMBLY (ALUMINUM WHEEL). 6
REMOVAL - TIRE AND WHEEL ASSEMBLY (STEEL WHEEL) 6
INSTALLATION
INSTALLATION - TIRE AND WHEEL ASSEMBLY (ALUMINUM WHEEL) 7
INSTALLATION - TIRE AND WHEEL ASSEMBLY (STEEL WHEEL) 7
TIRES
DESCRIPTION
DESCRIPTION - TIRE 7
DESCRIPTION - RADIAL-PLY TIRES 8
DESCRIPTION - REPLACEMENT TIRES 8
DESCRIPTION - SPARE TIRE (TEMPORARY) 9
DIAGNOSIS AND TESTING
DIAGNOSIS AND TESTING - TIRE NOISE OR VIBRATION 9
DIAGNOSIS AND TESTING - TIRE WEAR PATTERNS 9
DIAGNOSIS AND TESTING - TREAD WEAR INDICATORS 9
DIAGNOSIS AND TESTING - VEHICLE LEAD DIAGNOSIS AND CORRECTION 10
STANDARD PROCEDURE
STANDARD PROCEDURE - TIRE INFLATION PRESSURES 10
STANDARD PROCEDURE - TIRE PRESSURE FOR HIGH SPEED OPERATION 10
STANDARD PROCEDURE - TIRE LEAK REPAIRING 10
CLEANING - TIRES 10
WHEELS
DESCRIPTION - WHEEL 12
DIAGNOSIS AND TESTING - WHEEL INSPECTION 13
CLEANING
WHEEL AND WHEEL TRIM CARE 13
SPECIFICATIONS
WHEEL 13
WHEEL COVER
REMOVAL 14
INSTALLATION 14
WHEEL MOUNTING STUDS - FRONT
REMOVAL 14
INSTALLATION 15
WHEEL MOUNTING STUDS - REAR
REMOVAL 16
INSTALLATION 16

TIRES/WHEELS

DIAGNOSIS AND TESTING - TIRE AND WHEEL RUNOUT

NOTE: Runout should always be measured off the vehicle and on a suitable balance machine.

Radial runout is the difference between the high and low points on the outer edge of the tire or wheel.

Lateral runout is the total side-to-side wobble of the tire or wheel.

Radial runout of more than 1.5 mm (0.060 inch) measured at the center line of the tread may cause the vehicle to shake.

Lateral runout of more than 2.0 mm (0.080 inch) measured at the side of the tire as close to the tread as possible may cause the vehicle to shake.

Sometimes radial runout can be reduced by relocating the wheel and tire on the wheel studs (See Method 1). If this does not reduce runout to an acceptable level, the tire can be rotated on the wheel. (See Method 2).

TIRES/WHEELS (Continued)

METHOD 1 (RELOCATE WHEEL ON HUB)

Check accuracy of the wheel mounting surface; adjust wheel bearings (if applicable).

Drive vehicle a short distance to eliminate tire flat spotting from a parked position.

Verify all wheel nuts are tightened and torqued in the correct sequence (Fig. 1).

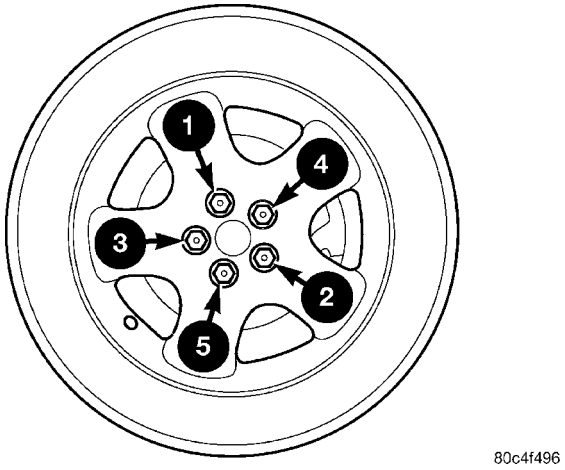

Fig. 1 Wheel Tightening Sequence

Use runout gauge D-128-TR to determine runout (Fig. 2).

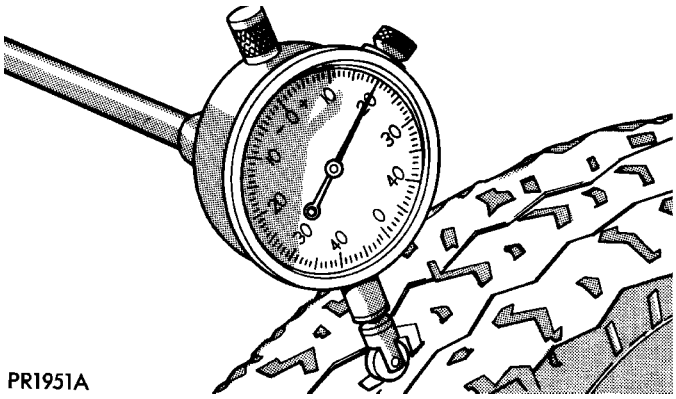

Fig. 2 Runout Gauge

Relocate the wheel on the mounting studs, two studs over from the original position.

Retighten wheel nuts until all are properly torqued. This will prevent brake distortion.

Check radial runout. If still excessive, mark tire sidewall, wheel, and stud at point of maximum runout (Fig. 3) and proceed to Method 2.

METHOD 2 (RELOCATE TIRE ON WHEEL)

Rotating tire on wheel is particularly effective when there is runout in both tire and wheel.

Remove tire from wheel and remount wheel on hub in former position.

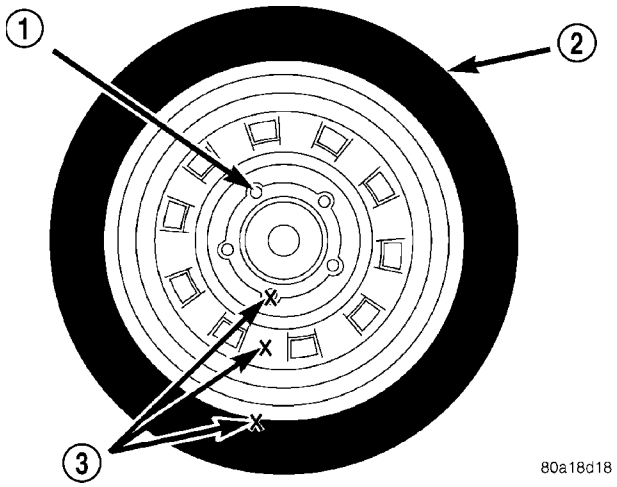

Fig. 3 Chalk Marking On Wheel, Tire And Stud

1 - STUD
2 - TIRE
3 - CHALK MARK LOCATIONS

Check the radial runout of the wheel (Fig. 4). The radial runout should be no more than 0.762 mm (0.030 inch).

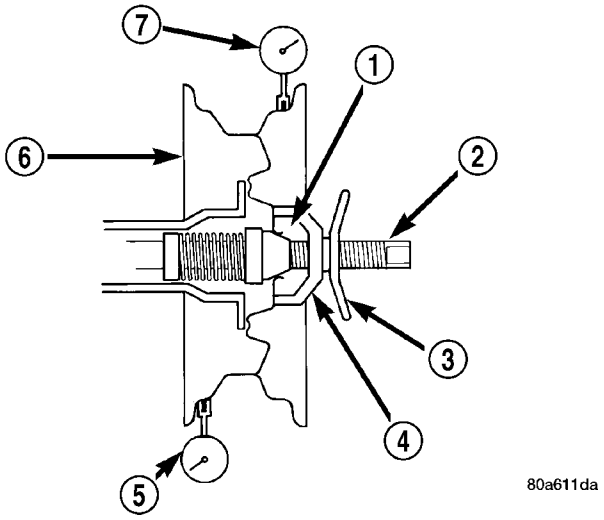

Fig. 4 Checking Wheel Radial Runout

1 - MOUNTING CONE
2 - SPINDLE SHAFT
3 - WING NUT
4 - PLASTIC CUP
5 - DIAL INDICATOR
6 - WHEEL
7 - DIAL INDICATOR

Check the lateral runout of the wheel (Fig. 5). The lateral runout should be no more than 0.762 mm (0.030 inch).

If the point of greatest wheel radial runout is near the original chalk mark, remount the tire on the rim 180 degrees from its original position. Recheck the runout. If this does not reduce the runout to an acceptable level, replace the wheel or the tire.

TIRES/WHEELS (Continued)

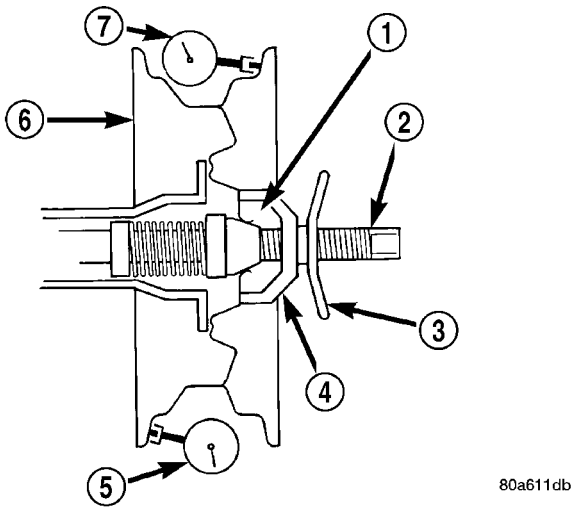

Fig. 5 Checking Wheel Lateral Runout

1 - MOUNTING CONE
2 - SPINDLE SHAFT
3 - WING NUT
4 - PLASTIC CUP
5 - DIAL INDICATOR
6 - WHEEL
7 - DIAL INDICATOR

STANDARD PROCEDURE

STANDARD PROCEDURE - TIRE AND WHEEL BALANCE

NOTE: Balance equipment must be calibrated and maintained per equipment manufacturer's specifications.

Wheel balancing can be accomplished with either on-vehicle or off-vehicle equipment.

NOTE: If using on-vehicle balancing equipment, on the driving axle, remove the opposite wheel and tire assembly.

It is recommended that a two-plane dynamic balancer be used when a wheel and tire assembly requires balancing. A static balancer should only be used when a two-plane balancer is not available.

Balance wheel and tire assemblies dynamically and statically to less than 0.25 (¼) ounce.

For static balancing, find location of heavy spot causing imbalance. Counter balance wheel directly opposite the heavy spot. Determine weight required to counterbalance the area of imbalance. Place half of this weight on the **inner** rim flange and the other half on the **outer** rim flange (Fig. 6).

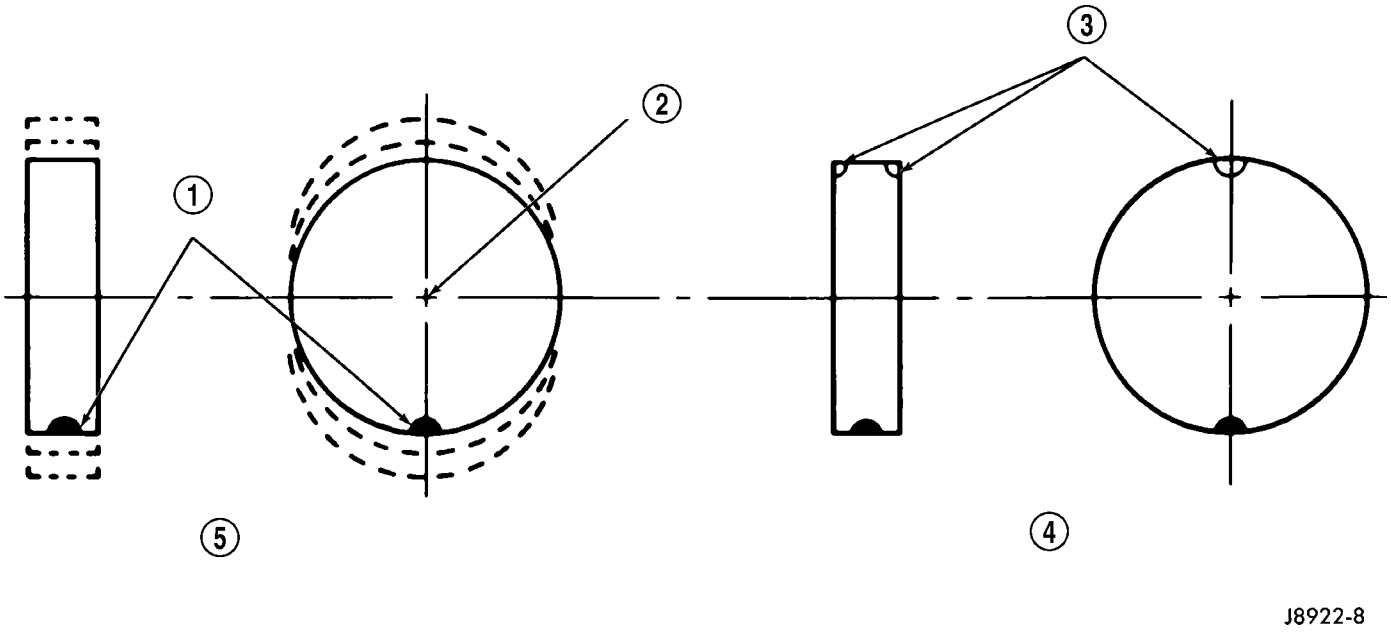

Fig. 6 Static Unbalance & Balance

1 - HEAVY SPOT
2 - CENTER LINE OF SPINDLE
3 - ADD BALANCE WEIGHTS HERE
4 - CORRECTIVE WEIGHT LOCATION
5 - TIRE OR WHEEL TRAMP, OR WHEEL HOP

TIRES/WHEELS (Continued)

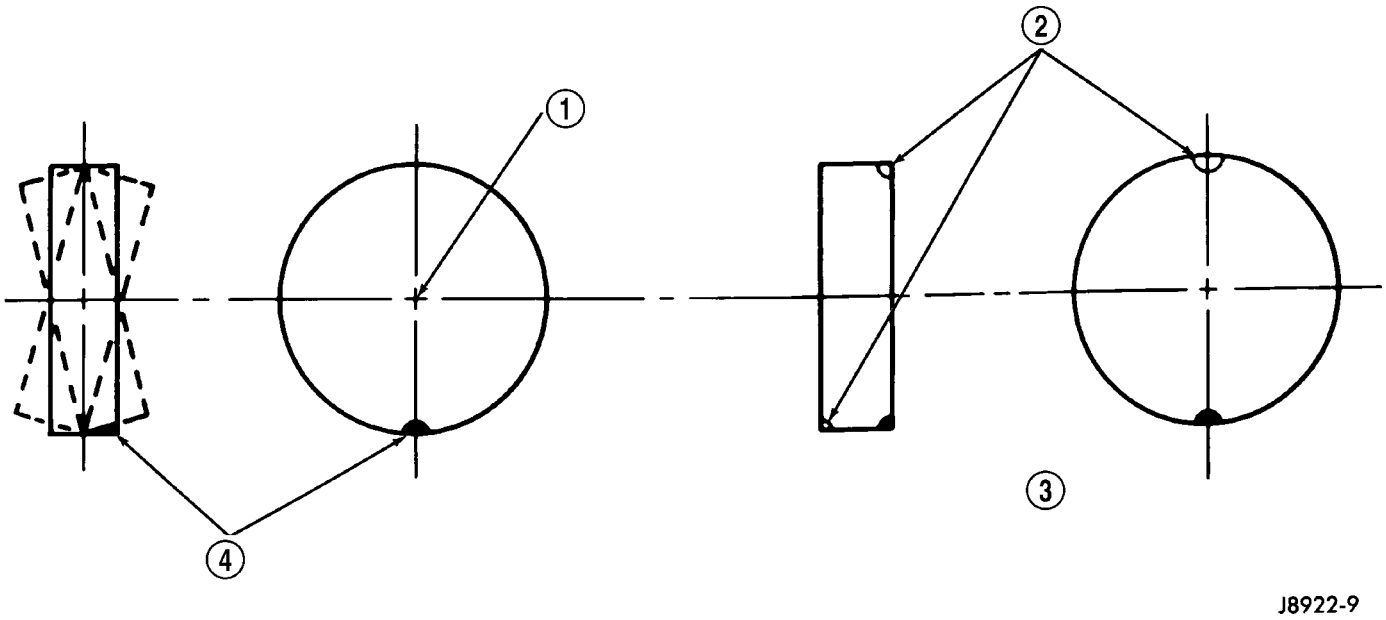

Fig. 7 Dynamic Unbalance & Balance

1 - CENTER LINE OF SPINDLE
2 - ADD BALANCE WEIGHTS HERE
3 - CORRECTIVE WEIGHT LOCATION
4 - HEAVY SPOT WHEEL SHIMMY AND VIBRATION

For dynamic balancing, the balance equipment is designed to indicate the location and amount of weight to be applied to both the inner and outer rim flanges (Fig. 7).

Aluminum wheels use unique wheel weights (Fig. 8). Each wheel weight is designed to fit the contoured surface of the wheel (Fig. 8). When balancing an aluminum wheel, the correct wheel weight must be used. Do not use any other type of wheel weight. It will not properly fit the contour of the wheel.

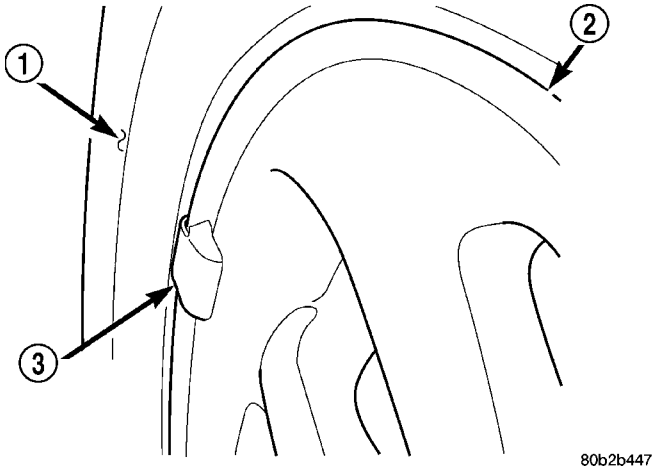

Fig. 8 Aluminum Wheel Weight

1 - TIRE
2 - WHEEL
3 - WHEEL WEIGHT

Always verify the Balance. When using off-vehicle equipment, rotate assembly 180 degrees on balance equipment to verify balance. Variation should not be more than 0.125 (⅛) ounce. If variation is more than 0.125 ounce, balancing equipment could be malfunctioning.

If difficult to balance, break down the wheel and tire assembly and check for loose debris inside tire. Prior to disassembly, mark (index) the tire at the valve stem. Use this mark in order to remount the tire in its original orientation with respect to the wheel.

STANDARD PROCEDURE - TIRE AND WHEEL MATCH MOUNTING

Steel wheels and tires are match mounted at the factory. This means that the high spot of the tire is matched to the low spot on the wheel rim. This technique is used to reduce runout in the wheel/tire assembly. The high spot on the tire is marked with a paint mark or a bright colored adhesive label on the outboard sidewall. The low spot on the rim is identified with a label on the outside of the rim and a dot or line in the drop well on the tire side of the rim. If the outside label has been removed the tire will have to be removed to locate the dot or line on the inside of the rim.

Before dismounting a tire from its wheel, a reference mark should be placed on the tire at the valve stem location. This reference will ensure that it is remounted in the original position on the wheel.

TIRES/WHEELS (Continued)

(1) Measure the total indicator runout on the center of the tire tread rib. Record the indicator reading. Mark the tire to indicate the high spot. Place a mark on the tire at the valve stem location (Fig. 9).

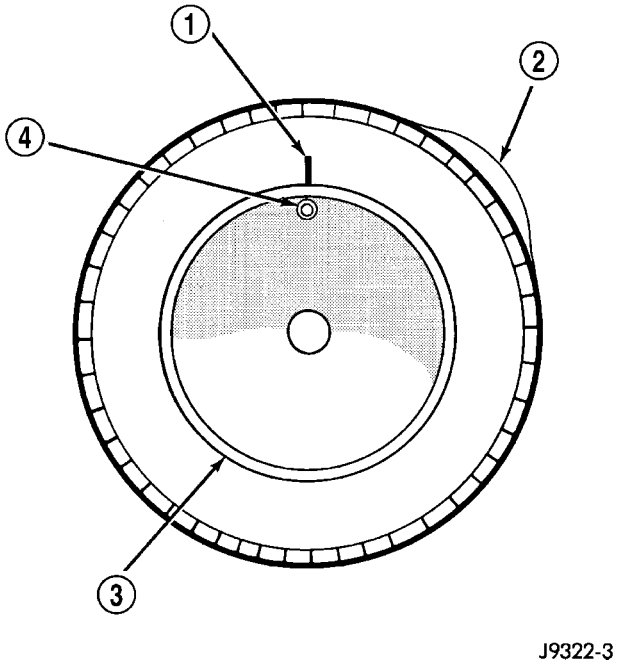

Fig. 9 First Measurement On Tire

1 - REFERENCE MARK
2 - 1ST MEASUREMENT
HIGH SPOT MARK TIRE AND RIM
3 - WHEEL
4 - VALVE STEM

(2) Break down the tire and remount it 180 degrees on the rim (Fig. 10).

(3) Measure the total indicator runout again. Mark the tire to indicate the high spot.

(4) If runout is still excessive (in excess of 1.524 mm or 0.060 in.), the following procedures must be done.

- If the new high spot is within 102 mm (4.0 in.) of the first spot on the tire and is still excessive, replace the tire.
- If the new high spot is within 102 mm (4.0 in.) of the first spot on the wheel, the wheel may be out of specifications. Refer to Tire and Wheel Runout.
- If the new high spot is NOT within 102 mm (4.0 in.) of either high spot, draw an arrow on the tread from new high spot to first. Break down the tire and remount it 90 degrees on rim in that direction (Fig. 11), then remeasure runout. This procedure will normally reduce the runout to an acceptable amount.

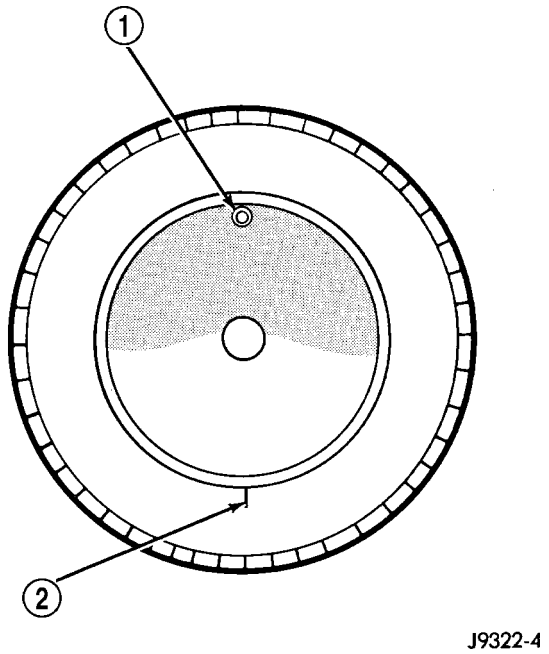

Fig. 10 Remount Tire 180 Degrees

1 - VALVE STEM
2 - REFERENCE MARK

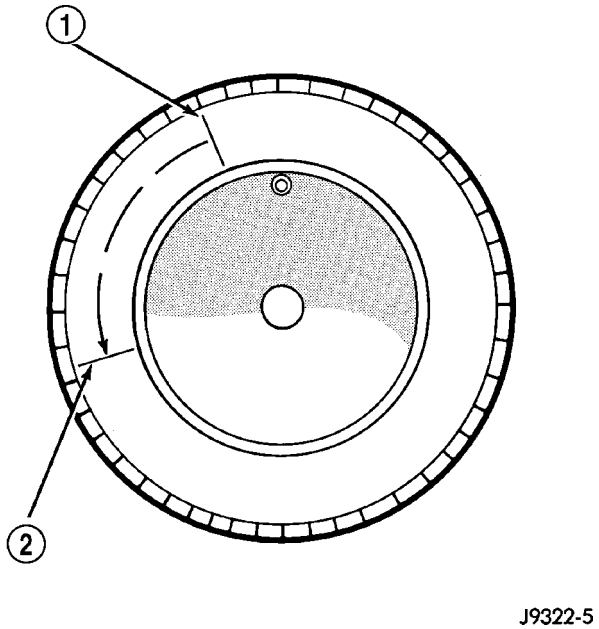

Fig. 11 Remount Tire 90 Degrees In Direction of Arrow

1 - 2ND HIGH SPOT ON TIRE
2 - 1ST HIGH SPOT ON TIRE

TIRES/WHEELS (Continued)

STANDARD PROCEDURE - TIRE AND WHEEL ROTATION

NON-DIRECTIONAL TREAD PATTERN TIRES

Tires on the front and rear axles operate at different loads and perform different functions. For these reasons, they wear at unequal rates, and tend to develop irregular wear patterns. These effects can be reduced by timely rotation of tires. The benefits of rotation are especially worthwhile. Rotation will increase tread life, help to maintain mud, snow, and wet traction levels, and contribute to a smooth, quiet ride.

The suggested rotation method is the forward-cross tire rotation method (Fig. 12). This method takes advantage of current tire industry practice which allows rotation of radial-ply tires. Other rotation methods may be used, but may not have all the benefits of the recommended method.

NOTE: Only the 4 tire rotation method may be used if the vehicle is equipped with a low mileage or temporary spare tire.

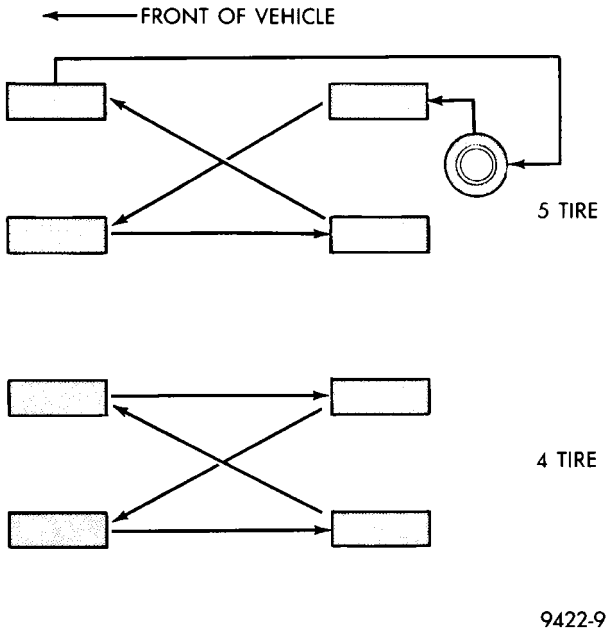

Fig. 12 Forward-Cross Tire Rotation Method

DIRECTIONAL TREAD PATTERN TIRES

Some vehicles are fitted with special high-performance tires having a directional tread pattern. These tires are designed to improve traction on wet pavement. To obtain the full benefits of this design, the tires must be installed so that they rotate in the correct direction. This is indicated by arrows on the tire sidewalls.

When wheels and tires are being installed, extra care is needed to ensure that this direction of rotation is maintained.

Refer to Owner's Manual for rotation schedule.

REMOVAL

REMOVAL - TIRE AND WHEEL ASSEMBLY (ALUMINUM WHEEL)

(1) Raise the vehicle. (Refer to LUBRICATION & MAINTENANCE/HOISTING - STANDARD PROCEDURE)

(2) If the wheel has a large center cap that covers the wheel mounting nuts, remove the cap by prying it off.

(3) Remove the wheel mounting nuts from the studs.

(4) Remove the tire and wheel assembly from the hub.

REMOVAL - TIRE AND WHEEL ASSEMBLY (STEEL WHEEL)

(1) Raise the vehicle. (Refer to LUBRICATION & MAINTENANCE/HOISTING - STANDARD PROCEDURE)

CAUTION: When removing the bolt-on wheel cover, do not attempt to pry the wheel cover off the wheel.

(2) Unthread and remove the 5 nuts attaching the wheel and wheel cover to the vehicle (Fig. 13).

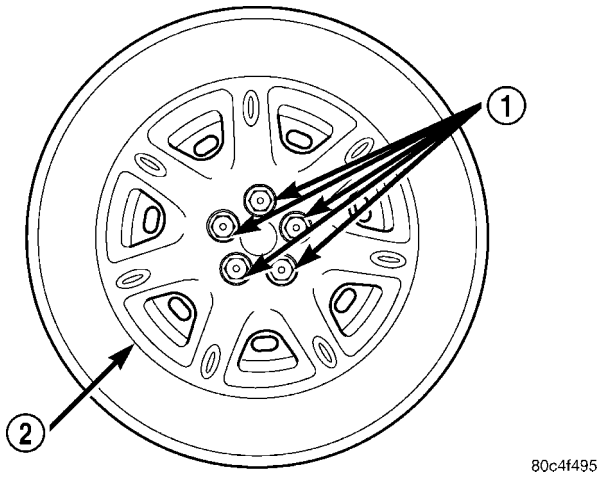

Fig. 13 Wheel And Cover Mounting

1 - WHEEL MOUNTING NUTS
2 - BOLT-ON WHEEL COVER

(3) Remove the wheel cover using care not to let the tire and wheel assembly fall off the vehicle.

(4) Remove the tire and wheel assembly from the hub.

TIRES/WHEELS (Continued)

INSTALLATION

INSTALLATION - TIRE AND WHEEL ASSEMBLY (ALUMINUM WHEEL)

CAUTION: Installing the wheel mounting nuts without having good metal-to-metal contact between the back of the wheel and the hub mounted brake disc or drum could cause the wheel to bind and eventually cause loosening of the wheel mounting nuts.

(1) Install the tire and wheel assembly on the hub studs against the hub mounted brake disc or drum using the hub pilot as a guide.

CAUTION: When installing the tire and wheel assembly, never use oil or grease on studs or nuts.

(2) Install and lightly tighten the wheel mounting nuts in the proper sequence (Fig. 14).

(3) Lower the vehicle.

(4) Progressively tighten the 5 wheel mounting nuts in the proper sequence until tightened to half of the specified torque (Fig. 14). Finally, tighten the wheel nuts in the proper sequence to a torque of 135 N·m (100 ft. lbs.).

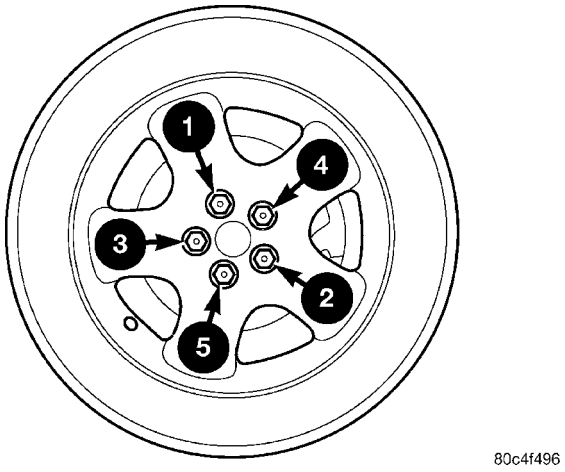

Fig. 14 Wheel Tightening Sequence

(5) If the wheel has a large center cap to cover the wheel mounting nuts, install the cap.

INSTALLATION - TIRE AND WHEEL ASSEMBLY (STEEL WHEEL)

CAUTION: Installing the wheel mounting nuts without having good metal-to-mental contact between the back of the wheel and the hub mounted brake disc or drum could cause the wheel to bind and eventually cause loosening of the wheel mounting nuts.

CAUTION: When installing the tire and wheel assembly, never use oil or grease on studs or nuts.

(1) Install the tire and wheel assembly on the wheel studs, up against the hub mounted brake disc or drum, using the hub pilot as a guide.

(2) Align the valve notch in the wheel cover with the valve stem on the wheel and install the wheel cover on the hub mounted studs.

(3) Install and lightly tighten the wheel mounting nuts in the proper sequence (Fig. 15).

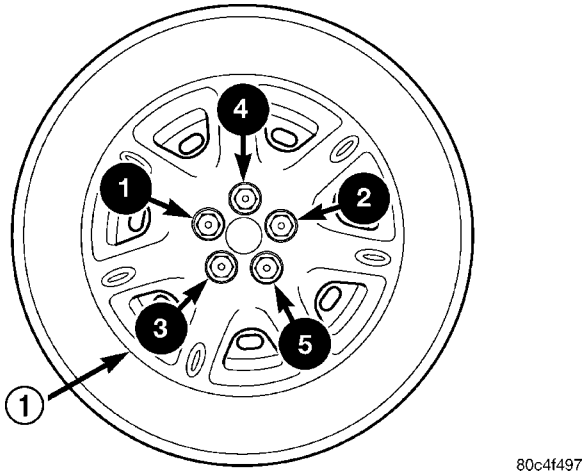

Fig. 15 Nut Tightening Sequence

1 - BOLT-ON WHEEL COVER

(4) Lower the vehicle.

(5) Progressively tighten the 5 wheel mounting nuts in the proper sequence until tightened to half of the specified torque (Fig. 15). Finally, tighten the wheel mounting nuts in the proper sequence to 135 N·m (100 ft. lbs.) torque.

TIRES

DESCRIPTION

DESCRIPTION - TIRE

Original equipment tires are designed and engineered for each specific vehicle. They provide the best overall performance for normal operation. The ride and handling characteristics match the vehicle's requirements. With proper care they will give excellent reliability, traction, skid resistance, and tread life.

Driving habits have more effect on tire life than any other factor. Careful drivers will obtain, in most cases, much greater mileage than severe use or careless drivers. A few of the driving habits which will shorten the life of any tire are:

- Rapid acceleration

TIRES (Continued)

- Severe application of brakes
- High-speed driving
- Taking turns at excessive speeds
- Striking curbs and other obstacles
- Operating vehicle with over or under inflated tire pressures

Radial ply tires are more prone to irregular tread wear. It is important to follow the tire rotation interval shown in the section on Tire And Wheel Rotation. This will help to achieve a greater tread-life potential.

TIRE IDENTIFICATION

Tire type, size, aspect ratio and speed rating are encoded in the letters and numbers imprinted on the side wall of the tire. Refer to the figure (Fig. 16) to interpret the tire identification code.

Performance tires will have a speed rating letter after the aspect ratio number. For example, the letter "S" indicates that the tire is speed rated up to 112 mph (180 km/h). The speed rating is not always printed on the tire sidewall.

- Q - up to 100 mph (160 km/h)
- S - up to 112 mph (180 km/h)
- T - up to 118 mph (190 km/h)
- U - up to 124 mph (200 km/h)
- H - up to 130 mph (210 km/h)
- V - up to 149 mph (240 km/h)
- Z - more than 149 mph (240 km/h) (consult the tire manufacturer for the specific speed rating)

An All Season type tire will have either M + S, M & S or M-S (indicating mud and snow traction) imprinted on the side wall.

TIRE CHAINS

Refer to the owners manual supplied with the vehicle to determine whether the use of tire chains is permitted on this vehicle.

DESCRIPTION - RADIAL-PLY TIRES

Radial-ply tires improve handling, tread life and ride quality, and decrease rolling resistance.

Radial-ply tires must always be used in sets of four. Under no circumstances should they be used on the front only. They may be mixed with temporary spare tires when necessary. A maximum speed of 80 km/h (50 mph) is recommended while a temporary spare is in use.

Radial-ply tires have the same load-carrying capacity as other types of tires of the same size. They also use the same recommended inflation pressures.

The use of oversized tires, either in the front or rear of the vehicle, can cause vehicle drive train failure. This could also cause inaccurate wheel speed signals when the vehicle is equipped with Antilock Brakes.

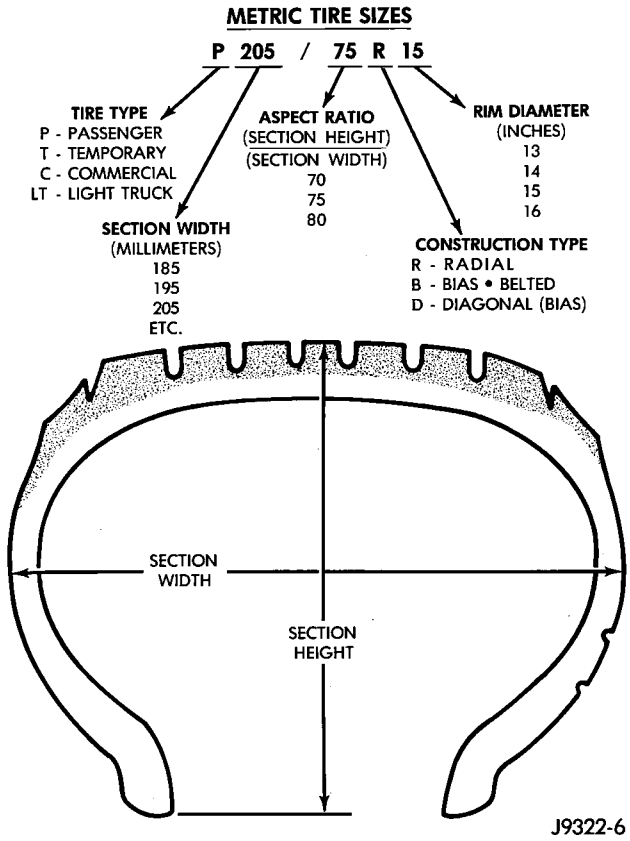

Fig. 16 Tire Identification (Typical)

The use of tires from different manufactures on the same vehicle is NOT recommended. The proper tire pressure should be maintained on all four tires.

DESCRIPTION - REPLACEMENT TIRES

WARNING: FAILURE TO EQUIP THE VEHICLE WITH TIRES HAVING ADEQUATE SPEED CAPABILITY CAN RESULT IN SUDDEN TIRE FAILURE.

It is recommended that tires equivalent to the original equipment tires be used when replacement is needed.

Failure to use equivalent replacement tires may adversely affect the safety and handling of the vehicle.

The original equipment tires provide a proper combination of many characteristics such as:

- Ride
- Noise
- Handling
- Durability
- Tread life
- Traction
- Rolling resistance
- Speed capability

The use of oversize tires may cause interference with vehicle components. Under extremes of suspension and steering travel, interference with vehicle components may cause tire damage.

TIRES (Continued)

DESCRIPTION - SPARE TIRE (TEMPORARY)

The compact temporary spare tire is designed for emergency use only. The original tire should be repaired or replaced at the first opportunity, then reinstalled. Do not exceed speeds of 80 km/h (50 mph) when using the temporary spare tire. Refer to Owner's Manual for complete details.

DIAGNOSIS AND TESTING

DIAGNOSIS AND TESTING - TIRE NOISE OR VIBRATION

Radial-ply tires are sensitive to force impulses caused by improper mounting, vibration, wheel defects, or possibly tire imbalance.

To find out if tires are causing the noise or vibration, drive the vehicle over a smooth road at varying speeds. Note the noise level during acceleration and deceleration. The engine, differential and exhaust noises will change as speed varies, while the tire noise will usually remain constant.

DIAGNOSIS AND TESTING - TIRE WEAR PATTERNS

Under inflation will cause wear on the shoulders of tire. Over inflation will cause wear at the center of tire.

Excessive camber causes the tire to run at an angle to the road. One side of tread is then worn more than the other (Fig. 17).

Excessive toe-in or toe-out causes wear on the tread edges and a feathered effect across the tread (Fig. 17).

DIAGNOSIS AND TESTING - TREAD WEAR INDICATORS

Tread wear indicators are molded into the bottom of the tread grooves. When tread depth is 1.6 mm (1/16 in.), the tread wear indicators will appear as a 13 mm (1/2 in.) band (Fig. 18).

Tire replacement is necessary when indicators appear in two or more grooves or if localized balding occurs.

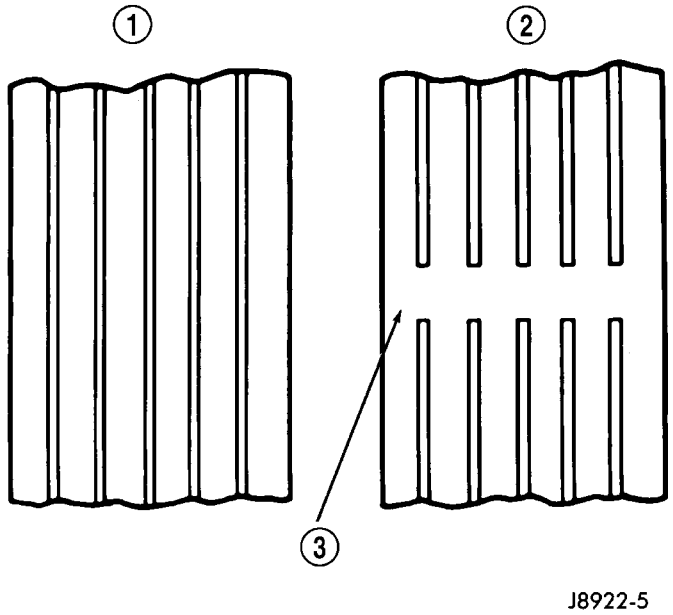

Fig. 18 Tread Wear Indicators

1 - TREAD ACCEPTABLE
2 - TREAD UNACCEPTABLE
3 - WEAR INDICATOR

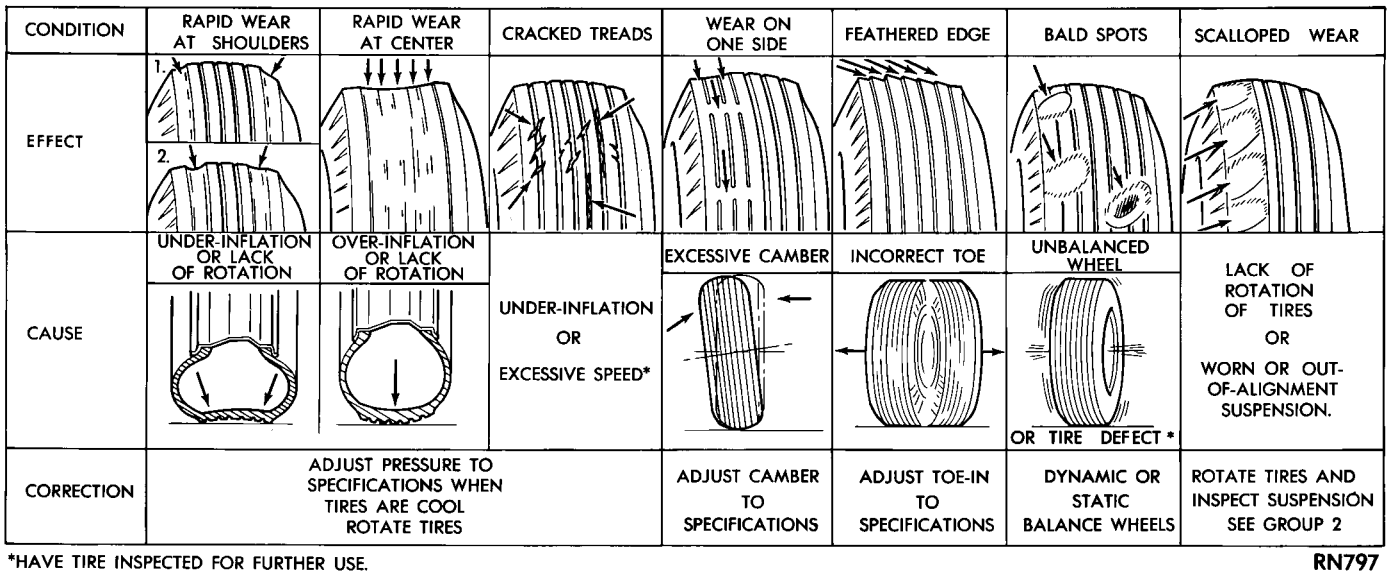

Fig. 17 Tire Wear Patterns

TIRES (Continued)

DIAGNOSIS AND TESTING - VEHICLE LEAD DIAGNOSIS AND CORRECTION

Use the following chart to diagnose a vehicle that has a complaint of a drift or lead condition. The use of this chart will help to determine if the lead condition is the result of a bad tire or is caused by the wheel alignment.

STANDARD PROCEDURE

STANDARD PROCEDURE - TIRE INFLATION PRESSURES

The specified tire pressures have been chosen to provide safe operation, vehicle stability, and a smooth ride. The proper tire pressure specification can be found on the Tire Inflation Pressure Label provided with the vehicle (usually on the rear face of the driver's door).

A quality air pressure gauge is recommended to check tire air pressure. Tire pressure should be checked cold once per month. Check tire pressure more frequently when the weather temperature varies widely. Tire pressure will decrease when the outdoor temperature drops. After checking the air pressure, replace valve cap finger tight.

Inflation pressures specified on the Tire Inflation Pressure Label are always the cold inflation pressure of the tire. Cold inflation pressure is obtained after the vehicle has not been operated for at least 3 hours, or the vehicle is driven less than one mile after being inoperative for 3 hours. Tire inflation pressures may increase from 2 to 6 pounds per square inch (psi) during operation. Do not reduce this normal pressure buildup.

Improper inflation can cause:

- Uneven wear patterns
- Reduced tread life
- Reduced fuel economy
- Unsatisfactory ride
- The vehicle to drift.

WARNING: OVER OR UNDER INFLATED TIRES CAN AFFECT VEHICLE HANDLING. THE TIRE CAN FAIL SUDDENLY, RESULTING IN LOSS OF VEHICLE CONTROL.

Under inflation causes rapid shoulder wear, tire flexing, and can result in tire failure (Fig. 19).

Over inflation causes rapid center wear and loss of the tire's ability to cushion shocks (Fig. 20).

STANDARD PROCEDURE - TIRE PRESSURE FOR HIGH SPEED OPERATION

DaimlerChrysler Corporation advocates driving at safe speeds within posted speed limits. Where speed limits allow the vehicle to be driven at high speeds, correct tire inflation pressure is very important. Vehicles loaded to maximum capacity should not be driven at continuous speeds over 120 km/h (75 mph). Never exceed the maximum speed capacity of the tire. For information on tire identification and speed ratings, (Refer to 22 - TIRES/WHEELS/TIRES - DESCRIPTION).

STANDARD PROCEDURE - TIRE LEAK REPAIRING

For proper repairing, a radial tire must be removed from the wheel. Repairs should only be made if the defect, or puncture, is in the tread area (Fig. 21). The tire should be replaced if the puncture is located in the sidewall.

Deflate tire completely before attempting to dismount the tire from the wheel. **Use a lubricant such as a mild soap solution when dismounting or mounting tire.** Use tools free of burrs or sharp edges which could damage the tire or wheel rim.

Before mounting tire on wheel, make sure all rust is removed from the rim bead and repaint if necessary.

Install wheel on vehicle, and progressively tighten the 5 wheel nuts to a torque of 135 N·m (100 ft. lbs.).

CLEANING - TIRES

Before delivery of a vehicle, remove the protective coating on the tires with white sidewalls or raised white letters. To remove the protective coating, apply warm water and let it soak for a few minutes. Afterwards, scrub the coating away with a soft bristle brush. Steam cleaning may also be used to remove the coating.

CAUTION: DO NOT use gasoline, mineral oil, oil-based solvent or a wire brush for cleaning.

TIRES (Continued)

VEHICLE LEAD DIAGNOSIS AND CORRECTION PROCEDURE

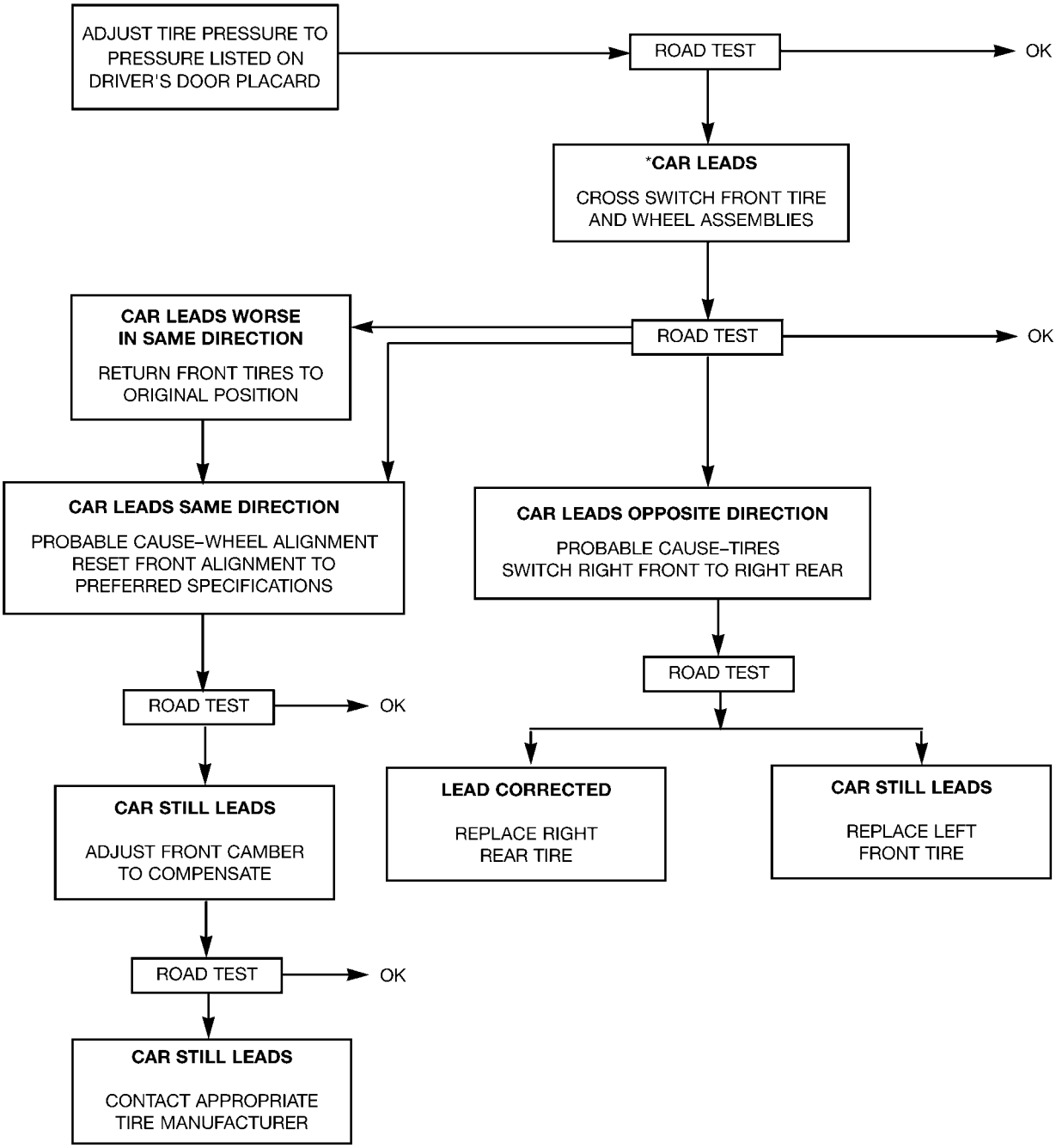

*NOTE: VERIFY THAT LEAD IS NOT RELATED TO STEERING WHEEL NOT CENTERED

80bbc343

TIRES (Continued)

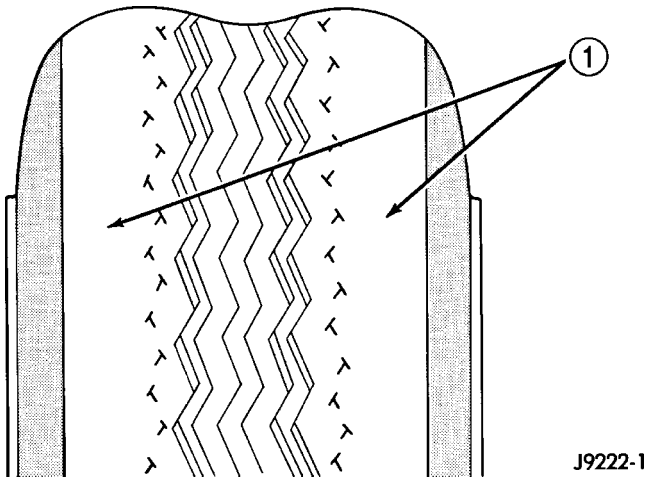

Fig. 19 Under Inflation Wear

1 - THIN TIRE TREAD AREAS

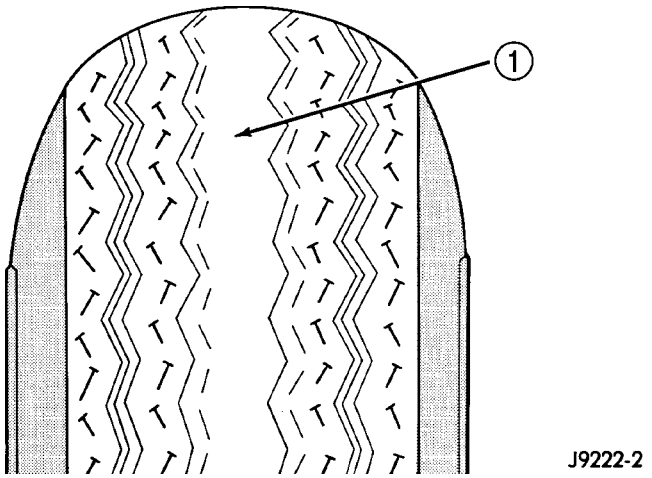

Fig. 20 Over Inflation Wear

1 - THIN TIRE TREAD AREA

WHEELS

DESCRIPTION - WHEEL

Original equipment wheels are designed for proper operation at all loads up to the specified maximum vehicle capacity.

All models use steel or cast aluminum drop center wheels. Every wheel has raised sections between the rim flanges and rim drop well called safety humps (Fig. 22).

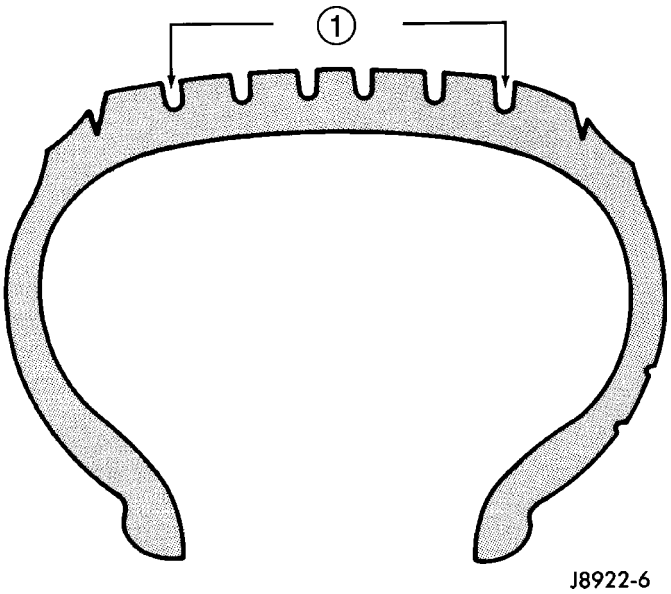

Fig. 21 Tire Repair Area

1 - REPAIRABLE AREA

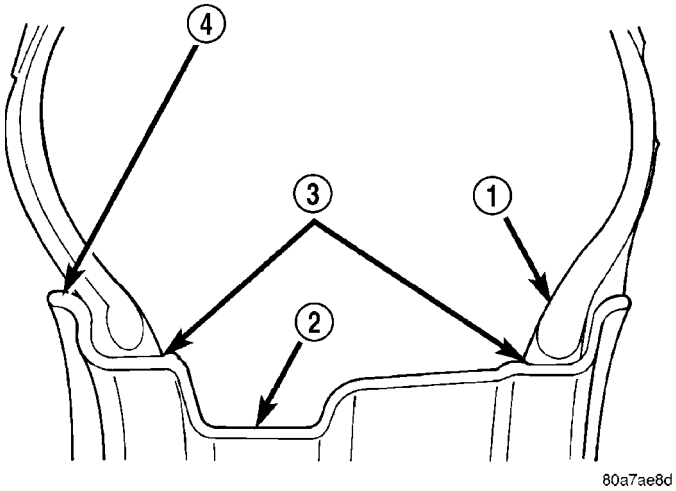

Fig. 22 Safety Rim

1 - TIRE
2 - WELL
3 - SAFETY HUMPS
4 - FLANGE

Initial inflation of the tires forces the bead over these raised sections. In case of air loss the raised sections help hold the tire in position on the wheel until the vehicle can be brought to a safe stop.

WHEELS (Continued)

Cast aluminum wheels require special balance weights to fit the contour of the wheel flange (Fig. 23).

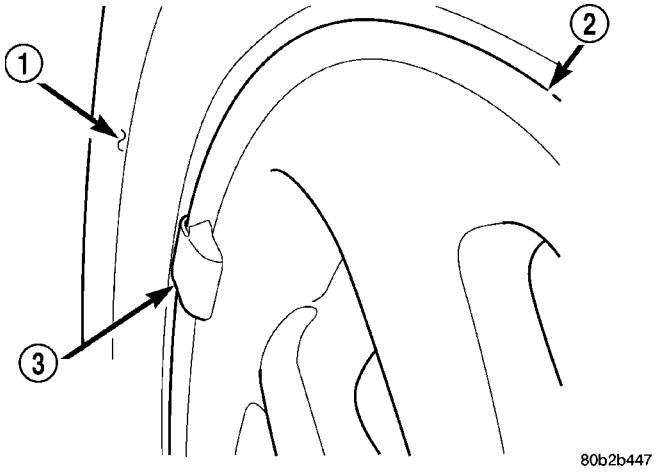

Fig. 23 Aluminum Wheel Weight

1 - TIRE
2 - WHEEL
3 - STYLED WHEEL WEIGHT

The wheel mounting studs and nuts are designed for specific wheel applications and must be replaced with equivalent parts. Do not use replacement parts of lesser quality or of a substitute design. All aluminum wheels use wheel mounting nuts with an enlarged nose. This enlarged nose is necessary to ensure proper retention of the wheels.

Vehicles that are equipped with bolt-on wheel covers use the wheel mounting nuts to retain the wheel cover.

DIAGNOSIS AND TESTING - WHEEL INSPECTION

Inspect wheels for:

- Excessive runout
- Dents, cracks or irregular bends
- Damaged wheel stud (lug) holes
- Air Leaks

NOTE: Do not attempt to repair a wheel by hammering, heating or welding.

If a wheel is damaged, an original equipment replacement wheel should be used. When obtaining replacement wheels, they must be equivalent in load carrying capacity. The diameter, width, offset, pilot hole and bolt circle of the wheel should be the same as the original wheel.

WARNING: FAILURE TO USE EQUIVALENT REPLACEMENT WHEELS MAY ADVERSELY AFFECT THE SAFETY AND HANDLING OF THE VEHICLE.

WARNING: REPLACEMENT WITH USED WHEELS IS NOT RECOMMENDED. THE SERVICE HISTORY OF THE WHEEL MAY HAVE INCLUDED SEVERE TREATMENT OR VERY HIGH MILEAGE. THE RIM COULD FAIL WITHOUT WARNING.

CLEANING

WHEEL AND WHEEL TRIM CARE

All wheels and wheel trim, especially aluminum and chrome plated, should be cleaned regularly using mild soap and water to maintain their luster and to prevent corrosion. Wash them with the same soap solution recommended for the body of the vehicle.

When cleaning extremely dirty wheels, care must be taken in the selection of tire and wheel cleaning chemicals and equipment to prevent damage to the wheels. Mopar® Wheel Treatment or Mopar® Chrome Cleaner is recommended. Any of the “DO NOT USE” items listed below can damage wheels and wheel trim.

DO NOT USE:

- Any abrasive cleaner
- Any abrasive cleaning pad (such as steel wool) or abrasive brush
- Any cleaner that contains an acid which can react with and discolor the chrome surface. **Many wheel cleaners contain acids that can harm the wheel surface.**
- Oven cleaner
- A car wash that uses carbide-tipped wheel cleaning brushes or acidic solutions.

SPECIFICATIONS

WHEEL

SPECIFICATIONS

DESCRIPTION	SPECIFICATION
Wheel Mounting (Lug) Nut Hex Size	19 mm
Wheel Mounting Stud Size	M12 x 1.5 mm

TORQUE SPECIFICATIONS

DESCRIPTION	N·m	Ft. Lbs.	In. Lbs.
Wheel Mounting (Lug) Nut	135	100	—

WHEEL COVER

REMOVAL

(1) Raise the vehicle. (Refer to LUBRICATION & MAINTENANCE/HOISTING - STANDARD PROCEDURE)

CAUTION: When removing the bolt-on wheel cover, do not attempt to pry the wheel cover off the wheel.

(2) Unthread and remove the 5 nuts attaching the wheel and wheel cover to the vehicle (Fig. 24).

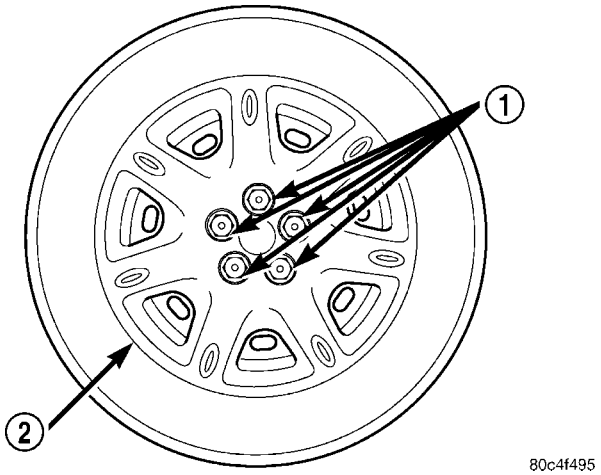

Fig. 24 Wheel And Cover Mounting

1 - WHEEL MOUNTING NUTS
2 - BOLT-ON WHEEL COVER

(3) Remove the wheel cover using care not to let the tire and wheel assembly fall off the vehicle.

INSTALLATION

CAUTION: Installing the wheel mounting nuts without having good metal-to-mental contact between the back of the wheel and the hub mounted brake disc or drum could cause the wheel to bind and eventually cause loosening of the wheel mounting nuts.

CAUTION: Never use oil or grease on wheel studs or wheel mounting nuts.

(1) With the tire and wheel assembly positioned on the wheel studs without the wheel mounting nuts installed, align the valve notch in the wheel cover with the valve stem on the wheel and install the wheel cover on the hub mounted studs.

(2) Install and lightly tighten the wheel mounting nuts in the proper sequence (Fig. 25).

(3) Lower the vehicle.

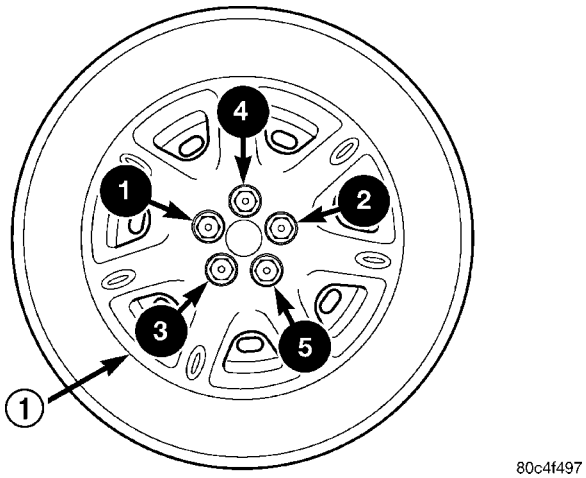

Fig. 25 Nut Tightening Sequence

1 - BOLT-ON WHEEL COVER

(4) Progressively tighten the 5 wheel mounting nuts in the proper sequence until tightened to half of the specified torque (Fig. 25). Finally, tighten the wheel mounting nuts in the proper sequence to 135 N·m (100 ft. lbs.) torque.

WHEEL MOUNTING STUDS - FRONT

REMOVAL

Use the following procedure to remove and install one of five studs on one wheel hub.

(1) Raise the vehicle. Refer to Hoisting in Lubrication And Maintenance.

(2) Remove the front tire and wheel assembly.

(3) Remove the two guide pin bolts securing the front disc brake caliper to the steering knuckle (Fig. 26).

(4) Remove the disc brake caliper from the steering knuckle. The caliper is removed by first tipping either the top (right side) or bottom (left side) of the caliper away from the brake rotor, then pulling the caliper off the opposite end's caliper slide abutment (on the knuckle) and rotor.

(5) Hang the caliper out of the way using a wire hanger or cord. Do not support the caliper by letting it hang by the hydraulic hose.

(6) Remove any retainer clips from the wheel mounting studs. Remove the brake rotor from the front hub (Fig. 26).

CAUTION: Do not hammer wheel mounting studs out of the hub. Damage to the wheel bearing will occur, leading to premature bearing failure.

WHEEL MOUNTING STUDS - FRONT (Continued)

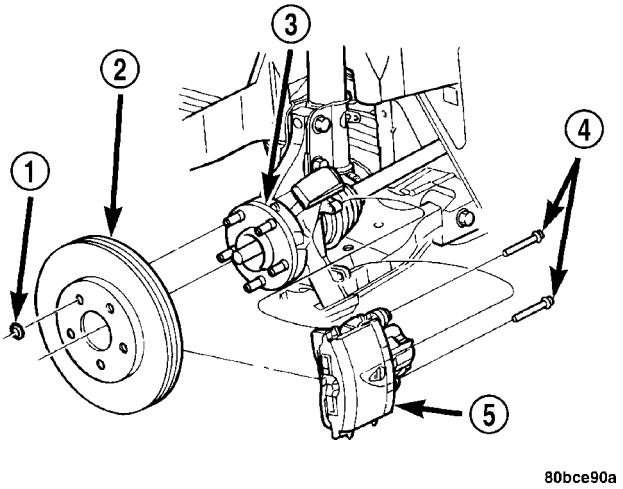

Fig. 26 Brake Caliper And Rotor

1 - RETAINER CLIP
2 - BRAKE ROTOR
3 - HUB
4 - GUIDE PIN BOLTS
5 - DISC BRAKE CALIPER

(7) Install a wheel mounting nut on the wheel mounting stud being removed from the hub far enough so the threads on the stud are even with end of lug nut. Rotate the hub so the stud requiring removal is aligned with notch cast into front of the steering knuckle. Install Remover, Special Tool C-4150A, on hub flange and wheel stud (Fig. 27).

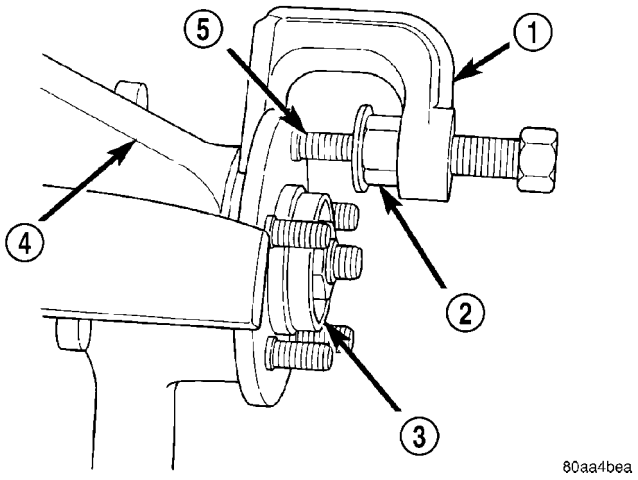

Fig. 27 Wheel Stud Removal

1 - SPECIAL TOOL C-4150A
2 - LUG NUT
3 - HUB/BEARING
4 - STEERING KNUCKLE
5 - WHEEL STUD

(8) Tighten the remover, pushing the wheel mounting stud out the rear of the hub flange. When the shoulder of the stud is past the flange, remove the remover from the hub. Remove the nut from the stud, then remove the stud from the flange.

INSTALLATION

Use the following procedure to remove and install one of five studs on one wheel hub.

(1) Install the wheel mounting stud in the flange of hub from the rear side. Install several washers and a wheel mounting nut on the stud (Fig. 28). The wheel mounting nut must be installed with the flat side of the wheel mounting nut against the washers to eliminate binding.

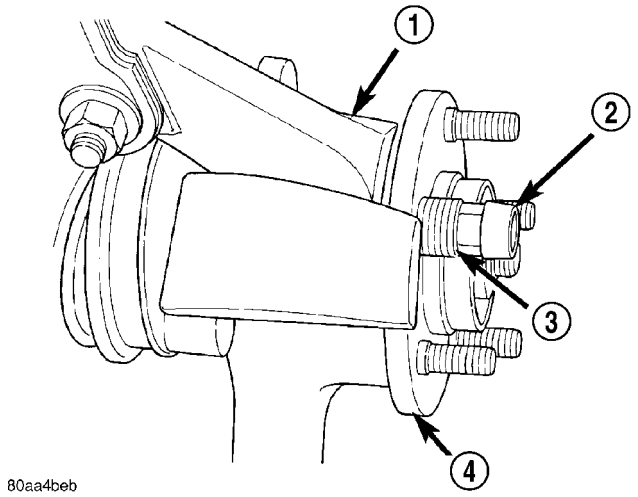

Fig. 28 Installing Wheel Stud

1 - STEERING KNUCKLE
2 - WHEEL LUG NUT
3 - WASHERS
4 - HUB/BEARING

(2) Tighten the wheel mounting nut. This will pull the wheel mounting stud into the flange of the hub. When the head of the stud is fully seated against the rear of the hub flange, remove the wheel mounting nut and washers from the stud.

(3) Install the brake rotor on the hub (Fig. 26).

(4) Install the disc brake caliper (with pads) on the brake rotor and steering knuckle. The left side caliper is installed by first sliding the top of the caliper past the top abutment on the steering knuckle to hook the top edge of the caliper, then pushing the lower end of the caliper into place against the knuckle (Fig. 29). The right side caliper is installed by first sliding the bottom edge of the caliper past the lower abutment on the steering knuckle to hook the lower edge of the caliper, then pushing the top of the caliper into place against the steering knuckle.

(5) Install the two guide pin bolts securing the front disc brake caliper to the steering knuckle (Fig. 26). Tighten the guide pin bolts to a torque of 22 N·m (192 in. lbs.).

(6) Install the tire and wheel assembly. Install the wheel mounting nuts and tighten them to a torque of 135 N·m (100 ft. lbs.).

WHEEL MOUNTING STUDS - FRONT (Continued)

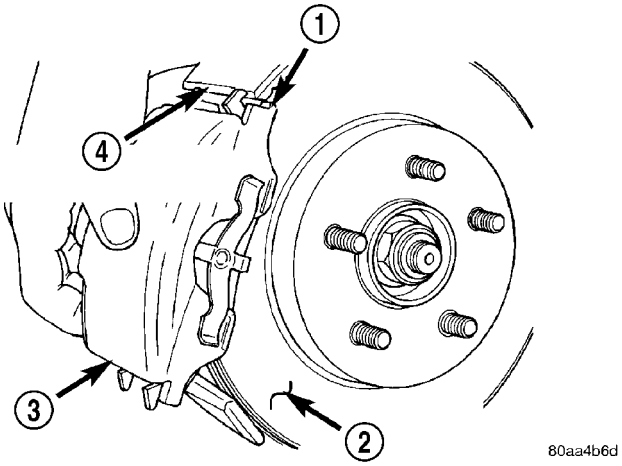

Fig. 29 Brake Caliper Installation

1 - SLIDE TOP OF BRAKE CALIPER UNDER TOP ABUTMENT OF STEERING KNUCKLE AS SHOWN
2 - BRAKING DISC
3 - DISC BRAKE CALIPER
4 - STEERING KNUCKLE BRAKE ABUTMENT

(7) Lower the vehicle.

WHEEL MOUNTING STUDS - REAR

REMOVAL

CAUTION: DO NOT hammer studs out of the hub flange. If a stud is removed by hammering it out of the bearing flange, damage to the hub and bearing assembly will occur leading to premature bearing failure.

(1) Remove the hub and bearing from the vehicle. (Refer to 2 - SUSPENSION/REAR/HUB / BEARING - REMOVAL)

CAUTION: Take care to keep hub and bearing assembly from falling during stud removal. Damage to the hub and bearing could result.

(2) Position the hub and bearing assembly under a hydraulic press ram, supported by a 21 mm deep-well impact socket under the stud to be replaced (Fig. 30).

(3) Press the stud out of the hub flange and into the socket well.

(4) Remove the hub and bearing assembly from the press.

(5) Remove the stud from the socket.

INSTALLATION

CAUTION: DO NOT hammer studs into the hub flange. If a stud is installed in such a manner, damage to the hub and bearing assembly may occur leading to premature bearing failure.

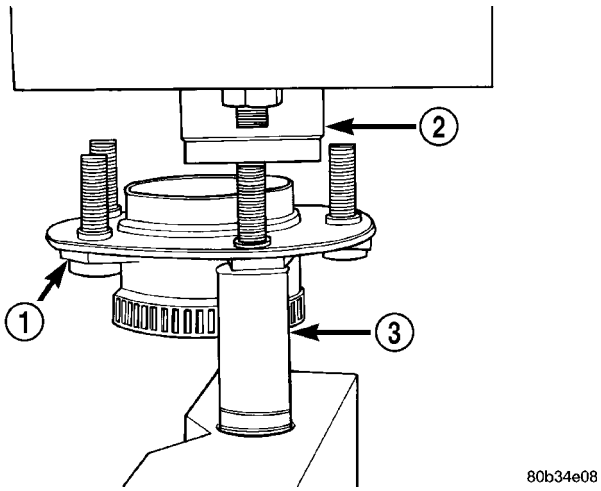

Fig. 30 Wheel Stud Removal

1 - HUB AND BEARING ASSEMBLY
2 - PRESS RAM
3 - 21mm IMPACT SOCKET

(1) Install wheel stud into stud hole in hub and bearing assembly.

(2) Position the hub and bearing assembly face down with stud pointing down into the well of the 21 mm socket. The hydraulic press ram must line up with the stud (Fig. 31).

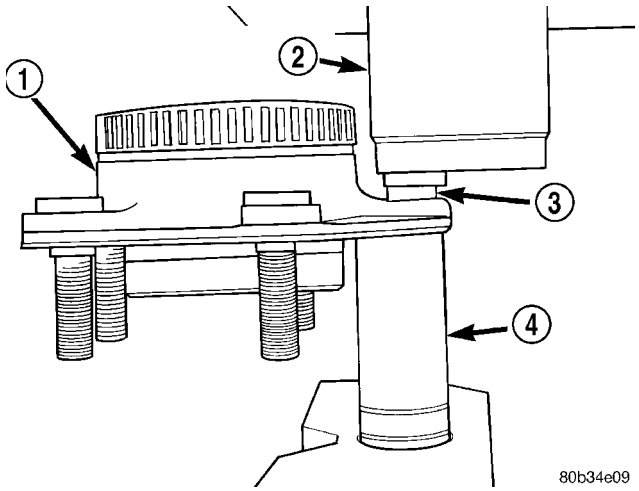

Fig. 31 Wheel Stud Installation

1 - HUB AND BEARING ASSEMBLY
2 - PRESS RAM
3 - WHEEL STUD
4 - 21mm IMPACT SOCKET

(3) Press the stud into the hub flange until it bottoms.

(4) Remove the hub and bearing assembly from the press.

(5) Install the hub and bearing on the vehicle. (Refer to 2 - SUSPENSION/REAR/HUB / BEARING - INSTALLATION)

BODY

TABLE OF CONTENTS

page

BODY
DESCRIPTION - VEHICLE IDENTIFICATION 1
WARNING
SAFETY PRECAUTIONS AND WARNINGS . . . 1
DIAGNOSIS AND TESTING
DIAGNOSIS AND TESTING - WATER LEAKS . 2
DIAGNOSIS AND TESTING - WIND NOISE . . . 3
STANDARD PROCEDURE
STANDARD PROCEDURE - PLASTIC BODY PANEL REPAIR 3
STANDARD PROCEDURE - HEAT STAKING . 10
SPECIFICATIONS
BODY LUBRICATION 10
SPECIFICATIONS - TORQUE 11
SPECIAL TOOLS
BODY 12
LIFTGATE 13
DOOR - FRONT 19
DOORS - REAR 28
EXTERIOR 35
HOOD 43
INSTRUMENT PANEL 46
INTERIOR 60
PAINT 66
SEATS 68
STATIONARY GLASS 74
SUNROOF 81
WEATHERSTRIP/SEALS 90
BODY STRUCTURE 95

BODY

DESCRIPTION - VEHICLE IDENTIFICATION

Throughout this group, references to the DaimlerChrysler Corporation vehicle family identification code are used when describing a procedure that is unique to that vehicle. Refer to Introduction Group of this manual for detailed information on vehicle identification. If a procedure is common to all vehicles covered in this manual, no reference will be made to a vehicle family code.

WARNING

SAFETY PRECAUTIONS AND WARNINGS

WARNING: USE A OSHA APPROVED BREATHING FILTER WHEN SPRAYING PAINT OR SOLVENTS IN A CONFINED AREA. PERSONAL INJURY CAN RESULT.
AVOID PROLONGED SKIN CONTACT WITH PETROLEUM OR ALCOHOL – BASED CLEANING SOLVENTS. PERSONAL INJURY CAN RESULT.
DO NOT STAND UNDER A HOISTED VEHICLE THAT IS NOT PROPERLY SUPPORTED ON SAFETY STANDS. PERSONAL INJURY CAN RESULT.

CAUTION: When holes must be drilled or punched in an inner body panel, verify depth of space to the outer body panel, electrical wiring, or other components. Damage to vehicle can result.
Do not weld exterior panels unless combustible material on the interior of vehicle is removed from the repair area. Fire or hazardous conditions, can result.
Always have a fire extinguisher ready for use when welding.
Disconnect the negative (-) cable clamp from the battery when servicing electrical components that are live when the ignition is OFF. Damage to electrical system can result.
Do not use abrasive chemicals or compounds on painted surfaces. Damage to finish can result.
Do not use harsh alkaline based cleaning solvents on painted or upholstered surfaces. Damage to finish or color can result.
Do not hammer or pound on plastic trim panel when servicing interior trim. Plastic panels can break.

BODY (Continued)

DIAGNOSIS AND TESTING

DIAGNOSIS AND TESTING - WATER LEAKS

Water leaks can be caused by poor sealing, improper body component alignment, body seam porosity, missing plugs, or blocked drain holes. Centrifugal and gravitational force can cause water to drip from a location away from the actual leak point, making leak detection difficult. All body sealing points should be water tight in normal wet-driving conditions. Water flowing downward from the front of the vehicle should not enter the passenger or luggage compartment. Moving sealing surfaces will not always seal water tight under all conditions. At times, side glass or door seals will allow water to enter the passenger compartment during high pressure washing or hard driving rain (severe) conditions. Overcompensating on door or glass adjustments to stop a water leak that occurs under severe conditions can cause premature seal wear and excessive closing or latching effort. After completing a repair, water test vehicle to verify leak has stopped before returning vehicle to use.

VISUAL INSPECTION BEFORE WATER LEAK TESTS

Verify that floor and body plugs are in place, body drains are clear, and body components are properly aligned and sealed. If component alignment or sealing is necessary, refer to the appropriate section of this group for proper procedures.

WATER LEAK TESTS

WARNING: DO NOT USE ELECTRIC SHOP LIGHTS OR TOOLS IN WATER TEST AREA. PERSONAL INJURY CAN RESULT.

When the conditions causing a water leak have been determined, simulate the conditions as closely as possible.

- If a leak occurs with the vehicle parked in a steady light rain, flood the leak area with an open-ended garden hose.
- If a leak occurs while driving at highway speeds in a steady rain, test the leak area with a reasonable velocity stream or fan spray of water. Direct the spray in a direction comparable to actual conditions.
- If a leak occurs when the vehicle is parked on an incline, hoist the end or side of the vehicle to simulate this condition. This method can be used when the leak occurs when the vehicle accelerates, stops or turns. If the leak occurs on acceleration, hoist the front of the vehicle. If the leak occurs when braking, hoist the back of the vehicle. If the leak occurs on left turns, hoist the left side of the vehicle. If the leak occurs on right turns, hoist the right side of the vehicle. For hoisting recommendations (Refer to LUBRICATION & MAINTENANCE/HOISTING - STANDARD PROCEDURE).

WATER LEAK DETECTION

To detect a water leak point-of-entry, do a water test and watch for water tracks or droplets forming on the inside of the vehicle. If necessary, remove interior trim covers or panels to gain visual access to the leak area. If the hose cannot be positioned without being held, have someone help do the water test.

Some water leaks must be tested for a considerable length of time to become apparent. When a leak appears, find the highest point of the water track or drop. The highest point usually will show the point of entry. After leak point has been found, repair the leak and water test to verify that the leak has stopped.

Locating the entry point of water that is leaking into a cavity between panels can be difficult. The trapped water may splash or run from the cavity, often at a distance from the entry point. Most water leaks of this type become apparent after accelerating, stopping, turning, or when on an incline.

MIRROR INSPECTION METHOD

When a leak point area is visually obstructed, use a suitable mirror to gain visual access. A mirror can also be used to deflect light to a limited-access area to assist in locating a leak point.

BRIGHT LIGHT LEAK TEST METHOD

Some water leaks in the luggage compartment can be detected without water testing. Position the vehicle in a brightly lit area. From inside the darkened luggage compartment inspect around seals and body seams. If necessary, have a helper direct a drop light over the suspected leak areas around the luggage compartment. If light is visible through a normally sealed location, water could enter through the opening.

PRESSURIZED LEAK TEST METHOD

When a water leak into the passenger compartment cannot be detected by water testing, pressurize the passenger compartment and soap test exterior of the vehicle. To pressurize the passenger compartment, close all doors and windows, start engine, and set heater control to high blower in HEAT position. If engine can not be started, connect a charger to the battery to ensure adequate voltage to the blower. With interior pressurized, apply dish detergent solution to suspected leak area on the exterior of the vehicle. Apply detergent solution with spray device or soft bristle brush. If soap bubbles occur at a body seam, joint, seal or gasket, the leak entry point could be at that location.

BODY (Continued)

DIAGNOSIS AND TESTING - WIND NOISE

Wind noise is the result of most air leaks. Air leaks can be caused by poor sealing, improper body component alignment, body seam porosity, or missing plugs in the engine compartment or door hinge pillar areas. All body sealing points should be airtight in normal driving conditions. Moving sealing surfaces will not always seal airtight under all conditions. At times, side glass or door seals will allow wind noise to be noticed in the passenger compartment during high cross winds. Over compensating on door or glass adjustments to stop wind noise that occurs under severe conditions can cause premature seal wear and excessive closing or latching effort. After a repair procedure has been performed, test vehicle to verify noise has stopped before returning vehicle to use.

VISUAL INSPECTION BEFORE TESTS

Verify that floor and body plugs are in place and body components are aligned and sealed. If component alignment or sealing is necessary, refer to the appropriate section of this group for proper procedures.

ROAD TESTING WIND NOISE

(1) Drive the vehicle to verify the general location of the wind noise.

(2) Apply 50 mm (2 in.) masking tape in 150 mm (6 in.) lengths along weatherstrips, weld seams or moldings. After each length is applied, drive the vehicle. If noise goes away after a piece of tape is applied, remove tape, locate, and repair defect.

POSSIBLE CAUSE OF WIND NOISE

- Moldings standing away from body surface can catch wind and whistle.
- Gaps in sealed areas behind overhanging body flanges can cause wind-rushing sounds.
- Misaligned movable components.
- Missing or improperly installed plugs in pillars.
- Weld burn through holes.

STANDARD PROCEDURE

STANDARD PROCEDURE - PLASTIC BODY PANEL REPAIR

There are many different types of plastics used in today's automotive environment. We group plastics in three different categories: Rigid, Semi-Rigid, and Flexible. Any of these plastics may require the use of an adhesion promoter for repair. These types of plastic are used extensively on DaimlerChrysler Motors vehicles. Always follow repair material manufacturer's plastic identification and repair procedures.

Rigid Plastics:

Examples of rigid plastic use: Fascias, Hoods, Doors, and other Body Panels, which include SMC, ABS, and Polycarbonates.

Semi-Rigid Plastics:

Examples of semi-rigid plastic use: Interior Panels, Under Hood Panels, and other Body Trim Panels.

Flexible Plastics:

Examples of flexible plastic use: Fascias, Body Moldings, and upper and lower Fascia Covers.

Repair Procedure:

The repair procedure for all three categories of plastics is basically the same. The one difference is the material used for the repair. The materials must be specific for each substrate, rigid repair material for rigid plastic repair, semi-rigid repair material for semi-rigid plastic repair and flexible repair material for flexible plastic repair.

Adhesion Promoter/Surface Modifier:

Adhesion Promoters/Surface Modifiers are required for certain plastics. All three categories may have plastics that require the use of adhesion promoter/surface modifiers. Always follow repair material manufacturer's plastic identification and repair procedures.

SAFETY PRECAUTION AND WARNINGS

WARNING:

- **EYE PROTECTION SHOULD BE USED WHEN SERVICING COMPONENTS. PERSONAL INJURY CAN RESULT.**
- **USE AN OSHA APPROVED BREATHING MASK WHEN MIXING EPOXY, GRINDING, AND SPRAYING PAINT OR SOLVENTS IN A CONFINED AREA. PERSONAL INJURY CAN RESULT.**
- **AVOID PROLONGED SKIN CONTACT WITH RESIN, PETROLEUM, OR ALCOHOL BASED SOLVENTS. PERSONAL INJURY CAN RESULT.**
- **DO NOT VENTURE UNDER A HOISTED VEHICLE THAT IS NOT PROPERLY SUPPORTED ON SAFETY STANDS. PERSONAL INJURY CAN RESULT.**

NOTE:

- **When holes must be drilled or cut in body panels, verify locations of internal body components and electrical wiring. Damage to vehicle can result.**
- **Do not use abrasive chemicals or compounds on undamaged painted surfaces around repair areas. Damage to finish can result.**

BODY (Continued)

RIGID, SEMI-RIGID, AND FLEXIBLE PLASTIC PARTS TYPES

CODE	FAMILY NAME	COMMON TRADE NAME	TYPICAL APPLICATION
ASA	ACRYLONITRILE STYRENE ACRYLITE	LURAN S	CONSOLES, GRILLES
ABS	ACRYLONITRILE BUTADIENE STYRENE	TERLURAN	″A″ PILLARS, CONSOLES, GRILLES
ABS/PC	ABS/PC ALLOY	PULSE, PROLOY, BAYBLEND	DOORS, INSTRUMENT PANELS
ABS/PVC	ABS/PV ALLOY	PROLOY, PULSE, LUSTRAN, CYCLOVIN	DOOR PANELS, GRILLES, TRIM
BMC	BULK MOLDING COMPOUND	BMC	FENDER EXTENSIONS
EMA	EHTYLENE METHYL ACRYLATE/IONOMER	SURLYN, EMA, IONOMER	BUMPER GUARDS, PADS
METTON	METTON	METTON	GRILLES, KICK PANELS, RUNNING BOARDS
MPPO	MODIFIED POLYPHENYLENE OXIDE	MPPO	SPOILER ASSEMBLY
PA	POLYAMID	ZYTEL, VYDYNE, PA, MINLON	FENDERS, QUARTER PANELS
PET	THERMOPLASTIC POLYESTER	RYNITE	TRIM
PBT/PPO	PBT/PPO ALLOY	GERMAX	CLADDINGS
PBTP	POLYBUTYLENE THEREPTHALATE	PBT, PBTP, POCAN, VALOX	WHEEL COVERS, FENDERS, GRILLES
PBTP/EEBC	POLYBUTYLENE THEREPTHALATE/EEBC ALLOY	BEXLOY, ″M″, PBTP/EEBC	FASCIAS, ROCKER PANEL, MOLDINGS
PC	POLYCARBONATE	LEXAN, MERLON, CALIBRE, MAKROLON PC	TAIL LIGHT LENSES, IP TRIM, VALANCE PANELS
PC/ABS	PC/ABS ALLOY	GERMAX, BAY BLENDS, PULSE	DOORS, INSTRUMENT PANELS
PPO	POLYPHENYLENE OXIDE	AZDEL, HOSTALEN, MARLEX, PRFAX, NORYL, GTX, PPO	INTERIOR TRIM, DOOR PANELS, SPLASH SHIELDS, STEERING COLUMN SHROUD
PPO/PA	POLYPHENYLENE/ POLYAMID	PPO/PA, GTX 910	FENDERS, QUARTER PANELS
PR/FV	FIBERGLASS REINFORCED PLASTIC	FIBERGLASS, FV, PR/FV	BODY PANELS
PS	POLYSTYRENE	LUSTREX, STYRON, PS	DOOR PANELS, DASH PANELS
RTM	RESIN TRANSFER MOLDING COMPOUND	RTM	BODY PANELS
SMC	SHEET MOLDED COMPOUND	SMC	BODY PANELS
TMC	TRANSFER MOLDING COMPOUND	TMC	GRILLES

BODY (Continued)

CODE	FAMILY NAME	COMMON TRADE NAME	TYPICAL APPLICATION
UP	UNSATURATED POLYESTER (THERMOSETTING)	SMC, BMC, TMC, ZMC, IMC, XSMC, UP	GRILLE OPENING PANEL, LIFTGATES, FLARESIDE FENDERS, FENDER EXTENSIONS
EEBC	ETHER/ESTER BLOCKED CO-POLYMER	EEBC	BUMPERS
EEBC/PBTP	EEBC/POLYBUTYLENE TEREPTHALATE	EEBC, PBTP, BEXLOY	BUMPER, ROCKER PANELS
EMPP	ETHYLENE MODIFIED POLYPROPYLENE	EMPP	BUMPER COVERS
EPDM	ETHYLENE/ PROPROPYLENE DIENE MONOMER	EPDM, NORDEL, VISTALON	BUMPERS
EPM	ETHYLENE/ PROPROPYLENE CO-POLYMER	EPM	FENDERS
MPU	FOAM POLYURETHANE	MPU	SPOILERS
PE	POLYETHYLENE	ALATHON, DYLAN, LUPOLEN, MARLEX	-
PP	POLYPROPYLENE (BLENDS)	NORYL, AZDEL, MARLOX, DYLON, PRAVEX	INNER FENDER, SPOILERS, KICK PANELS
PP/EPDM	PP/EPDM ALLOY	PP/EPDM	SPOILERS, GRILLES
PUR	POLYURETHANE	COLONELS, PUR, PU	FASCIAS, BUMPERS
PUR/PC	PUR/PC ALLOY	TEXIN	BUMPERS
PVC	POLYVINYL CHLORIDE	APEX, GEON, VINYLITE	BODY MOLDINGS, WIRE INSULATION, STEERING WHEELS
RIM	REACTION INJECTED MOLDED POLYURETHANE	RIM, BAYFLEX	FRONT FASCIAS, MODULAR WINDOWS
RRIM	REINFORCED REACTION INJECTED MOLDED	PUR, RRIM	FASCIAS, BODY PANELS, BODY TRIMS
TPE	THERMO POLYETHYLENE	TPE, HYTREL, BEXLOY-V	FASCIAS, BUMPERS, CLADDINGS
TPO	THERMOPOLYOLEFIN	POLYTROPE, RENFLEX, SANTOPRENE, VISAFLEX, ETA, APEX, TPO, SHIELDS, CLADDINGS	BUMPERS, END CAPS, TELCAR, RUBBER, STRIPS, SIGHT, INTERIOR B POST
TPP	THERMO-POLYPROPYLENE	TPP	BUMPERS
TPU	THERMOPOLYURETHANE, POLYESTER	TPU, HYTREL, TEXIN, ESTANE	BUMPERS, BODY SIDE, MOLDINGS, FENDERS, FASCIAS

BODY (Continued)

PANEL SECTIONING

If it is required to section a large panel for a plastic repair, it will be necessary to reinforce the panel (Fig. 1). To bond two plastic panels together, a reinforcement must overlap both panels. The panels must be “V’d” at a 20 degree angle. The area to be reinforced should be washed, then sanded. Be sure to wipe off any excess soap and water when finished. Lightly sand or abrade the plastic with an abrasive pad or sandpaper. Blow off any dust with compressed air or wipe with a clean dry rag.

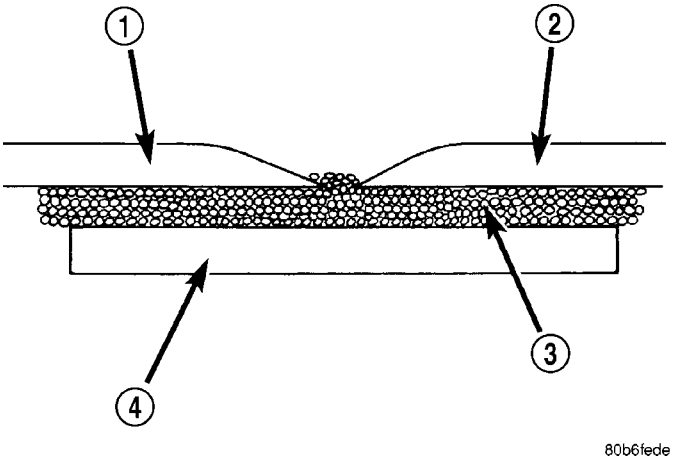

Fig. 1 PANEL SECTIONING

1 - EXISTING PANEL
2 - NEW PANEL
3 - PANEL ADHESIVE
4 - BONDING STRIP

When bonding plastic panels, Follow repair material manufacturers recommendations. Be sure that enough adhesive has been applied to allow squeeze out and to fill the full bond line. Once the pieces have been brought together, do not move them until the adhesive is cured. The assembly can be held together with clamps, rivets, etc. A faster cure can be obtained by heating with a heat lamp or heat gun. After the parts have been bonded and have had time to cure, rough sand the seam and apply the final adhesive filler to the area being repaired. Smooth the filler with a spreader, wooden tongue depressor, or squeegee. For fine texturing, a small amount of water can be applied to the filler surface while smoothing. The cured filler can be sanded as necessary and, as a final step, cleanup can be done with soapy water. Wipe the surface clean with a dry cloth allowing time for the panel to dry before moving on with the repair.

PANEL REINFORCEMENT

Structural repair procedures for rigid panels with large cracks and holes will require a reinforcement backing. Reinforcements can be made with several applications of glass cloth saturated with structural adhesive. Semi-rigid or flexible repair materials should be used for semi-rigid or flexible backing reinforcement (Fig. 2) and (Fig. 3). Open meshed fiberglass dry wall tape can be used to form a reinforcement. The dry wall tape allows the resin to penetrate through and make a good bond between the panel and the adhesive. Structurally, the more dry wall tape used, the stronger the repair.

Another kind of repair that can be done to repair large cracks and holes is to use a scrap piece of similar plastic and bond with structural adhesive. The reinforcement should cover the entire break and should have a generous amount of overlap on either side of the cracked or broken area.

When repairing plastic, the damaged area is first “V’d” out, or beveled. Large bonding areas are desirable when repairing plastic because small repairs are less likely to hold permanently. Beveling the area around a crack at a 20 degree angle will increase the bonding surface for a repair (Fig. 4). It is recommended that sharp edges be avoided because the joint may show through after the panel is refinished.

- Panel repair for both flexible and rigid panels

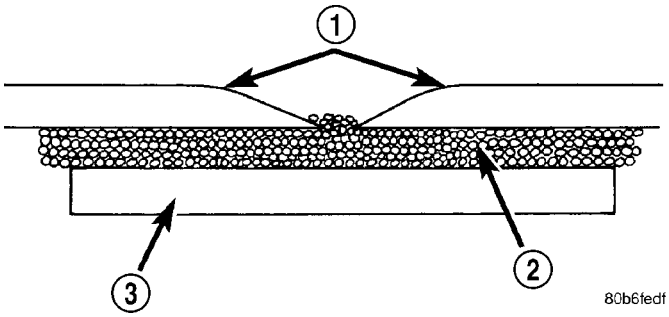

Fig. 2 SOFTENED EDGES

1 - SOFTENED EDGES
2 - PANEL ADHESIVE
3 - BONDING STRIP

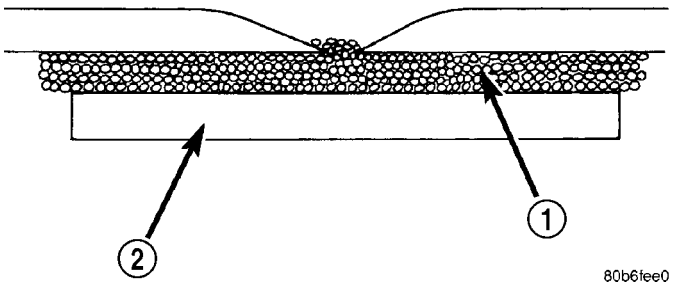

Fig. 3 PANEL REINFORCEMENT

1 - PANEL ADHESIVE
2 - REINFORCEMENT

are basically the same. The primary difference between flexible panel repair and rigid panel repair is in the adhesive materials used (Fig. 5).

BODY (Continued)

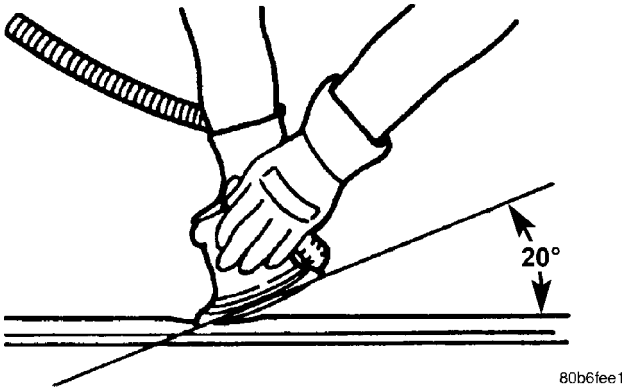

Fig. 4 BEVELING ANGLE - 20 DEGREE

- The technician should first decide what needs to be done when working on any type of body panel. One should determine if it is possible to return the damage part to its original strength and appearance without exceeding the value of the replacement part.
- When plastic repairs are required, it is recommended that the part be left on the vehicle when every possible. That will save time, and the panel will remain stationary during the repair. Misalignment can cause stress in the repair areas and can result in future failure.

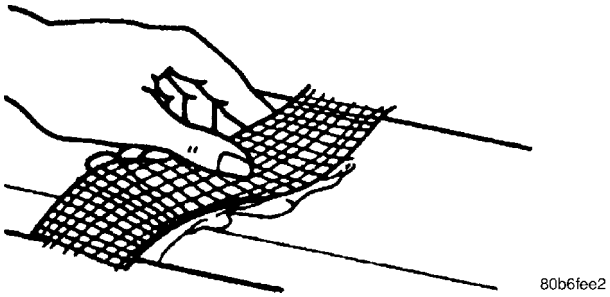

Fig. 5 FIBERGLASS TAPE

VISUAL INSPECTION

Composite materials can mask the severity of an accident. Adhesive bond lines, interior structure of the doors, and steel structures need to be inspected carefully to get a true damage assessment. Close inspection may require partial removal of interior trim or inner panels.

Identify the type of repair: Puncture or Crack - Damage that has penetrated completely through the panel. Damage is confined to one general area; a panel section is not required. However, a backer panel, open fiberglass tape, or matted material must be bonded from behind (Fig. 7) (Fig. 6).

PANEL SURFACE PREPARATION

If a body panel has been punctured, cracked, or crushed, the damaged area must be removed from the panel to achieve a successful repair. All spider web cracks leading away from a damaged area must be stopped or removed. To stop a running crack in a panel, drill a 6 mm (0.250 in.) hole at the end of the crack farthest away from the damage. If spider web cracks can not be stopped, the panel would require replacement. The surfaces around the damaged area should be stripped of paint and freed from wax and oil. Scuff surfaces around repair area with 360 grit wet/dry sandpaper, or equivalent, to assure adhesion of repair materials.

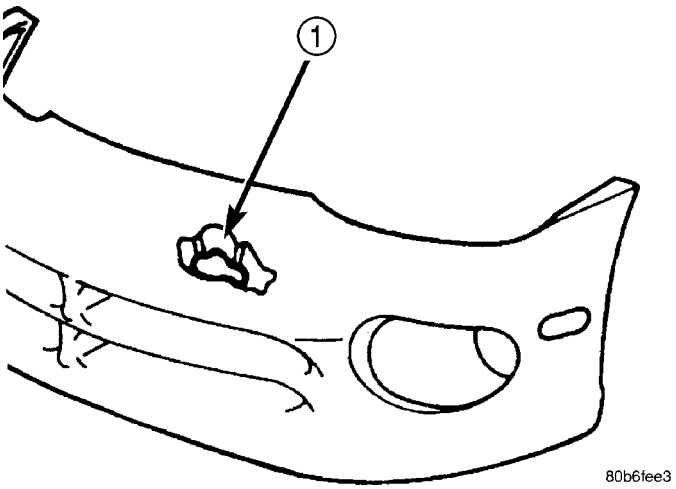

Fig. 6 DAMAGE COMPONENT

1 - PUNCTURE

PATCHING PANELS

An panel that has extensive puncture type damage can be repaired by cutting out the damaged material (Fig. 7). Use a suitable reciprocating saw or cut off wheel to remove the section of the panel that is damaged. The piece cut out can be used as a template to shape the new patch. It is not necessary to have access to the back of the panel to install a patch. Bevel edges of cutout at 20 degrees to expose a larger bonding area on the outer side. This will allow for an increased reinforcement areas.

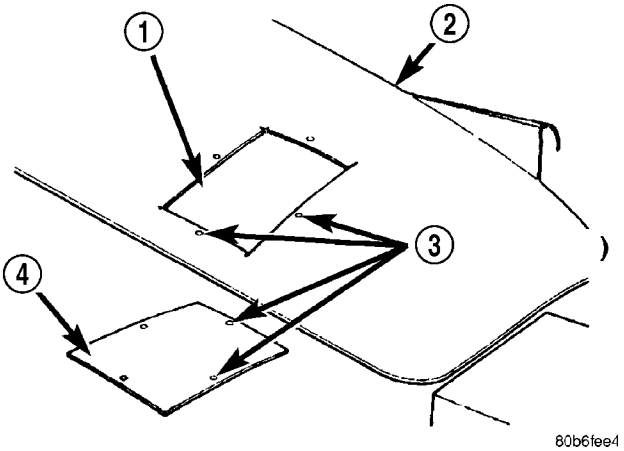

Fig. 7 DAMAGED PANEL CUTOUT AND PATCH

1 - CUTOUT
2 - DAMAGED BODY PANEL
3 - 4 MM (0.160 IN.) HOLES
4 - PATCH CUT TO SIZE

BODY (Continued)

PANEL PATCH FABRICATIONS

A patch can be fabricated from any rigid fiberglass panel that has comparable contour with the repair area. Lift gates and fenders can be used to supply patch material. If existing material is not available or compatible, a patch can be constructed with adhesive and reinforcement mesh (dry wall tape). Perform the following operation if required:

(1) Cover waxed paper or plastic with adhesive backed nylon mesh (dry wall tape) larger than the patch required (Fig. 8).

(2) Tape waxed paper or plastic sheet with mesh to a surface that has a compatible contour to the repair area.

(3) Apply a liberal coat of adhesive over the reinforcement mesh (Fig. 8). If necessary apply a second or third coat of adhesive and mesh after firs coat has cured. The thickness of the patch should be the same as the repair area.

(4) After patch has cured, peel waxed paper or plastic from the back of the patch.

(5) If desired, a thin film coat of adhesive can be applied to the back of the patch to cover mesh for added strength.

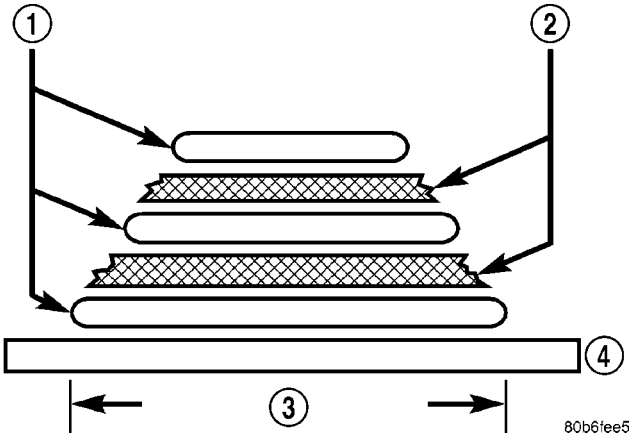

Fig. 8 FABRICATED PANEL

1 - STRUCTURAL ADHESIVE
2 - FIBERGLASS CLOTH OR FIBERGLASS MESH TAPE
3 - WIDTH OF V-GROOVE
4 - WAXED PAPER

PANEL PATCH INSTALLATION

(1) Make a paper or cardboard pattern the size and shape of the cutout hole in the panel.

(2) Trim 3 mm (0.125 in.) from edges of pattern so patch will have a gap between connecting surfaces.

(3) Using the pattern as a guide, cut the patch to size.

(4) Cut scrap pieces of patch material into 50 mm (2 in.) squares to use as patch supports to sustain the patch in the cutout.

(5) Drill 4 mm (0.160 in.) holes 13 mm (0.5 in.) in from edge of cutout hole (Fig. 7).

(6) Drill 4 mm (0.160 in.) holes 13 mm (0.5 in.) away from edge of patch across from holes drilled around cutout.

(7) Drill 3 mm (0.125 in.) holes in the support squares 13 mm (0.5 in.) from the edge in the center of one side.

(8) Scuff the backside of the body panel around the cutout hole with a scuff pad or sandpaper.

(9) Mix enough adhesive to cover one side of all support squares.

(10) Apply adhesive to cover one side of all support squares.

(11) Using number 8 sheet metal screws, secure support squares to back side of body panel with adhesive sandwiched between the panel and squares (Fig. 9).

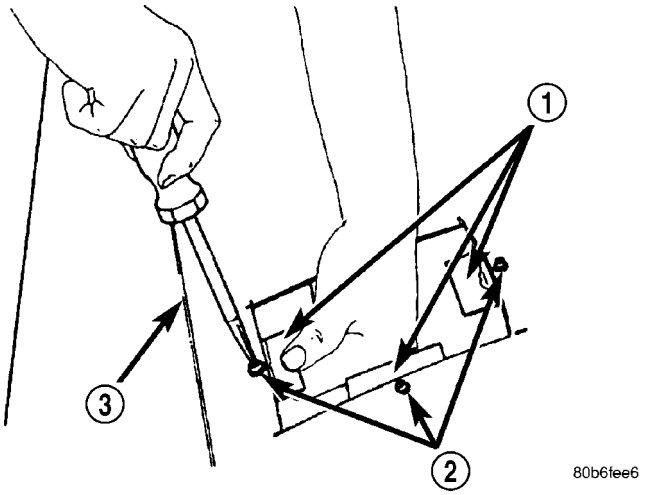

Fig. 9 SECURE SUPPORT SQUARES TO BODY PANEL

1 - SUPPORT SQUARES
2 - SCREWS
3 - DAMAGED BODY PANEL

(12) Position patch in cutout against support squares and adjust patch until the gap is equal along all sides (Fig. 10).

(13) Drill 3 mm (0.125 in.) holes in the support squares through the pre-drilled holes in the patch.

(14) Apply a coat of adhesive to the exposed ends of the support squares (Fig. 11).

(15) Install screws to hold the patch to support squares (Fig. 12). Tighten screws until patch surface is flush with panel surface.

(16) Allow adhesive to cure, and remove all screws.

(17) Using a 125 mm (5 in.) 24 grit disc grinder, grind a 50 mm (2 in.) to 75 mm (3 in.) wide and 2 mm (0.080 in.) deep path across the gaps around the patch (Fig. 13). With compressed air, blow dust from around patch.

(18) Apply adhesive backed nylon mesh (dry wall tape) over gaps around patch (Fig. 14).

BODY (Continued)

(19) Mix enough adhesive to cover the entire patch area.

(20) Apply adhesive over the mesh around patch, and smooth epoxy with a wide spreader to reduce finish grinding. Use two to three layers of mesh and adhesive to create a stronger repair (Fig. 15).

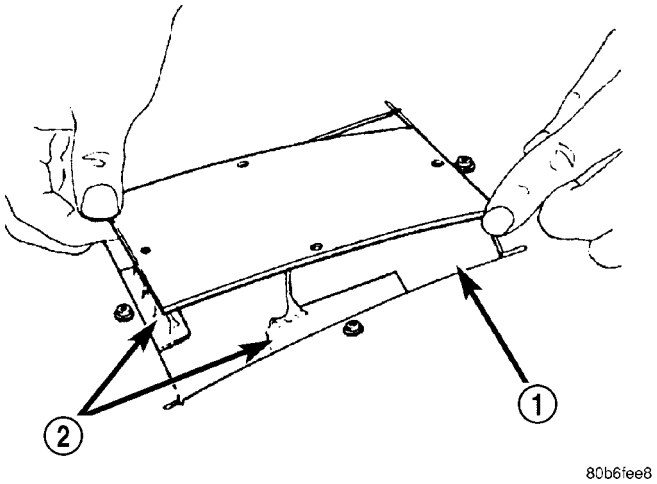

Fig. 10 POSITION PATCH IN CUTOUT AND ALIGN

1 - CUTOUT
2 - SUPPORT SQUARES

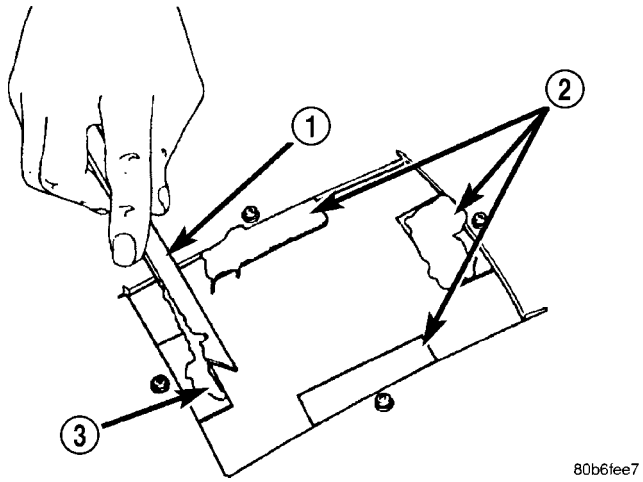

Fig. 11 APPLY ADHESIVE TO SUPPORT SQUARES

1 - APPLICATOR
2 - SUPPORT SQUARES
3 - ADHESIVE

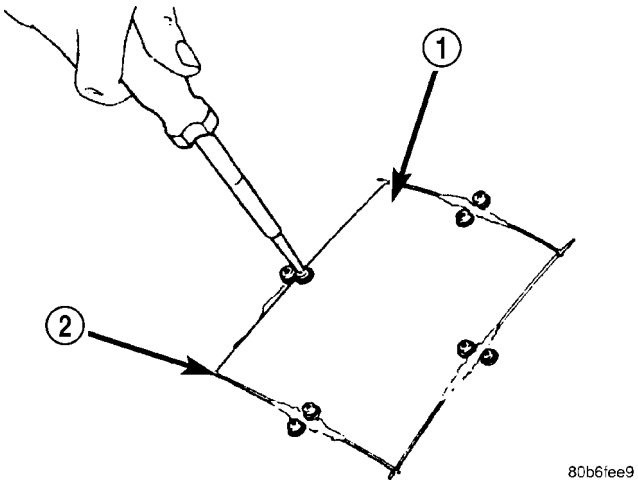

Fig. 12 INSTALL SCREWS

1 - PATCH
2 - GAP

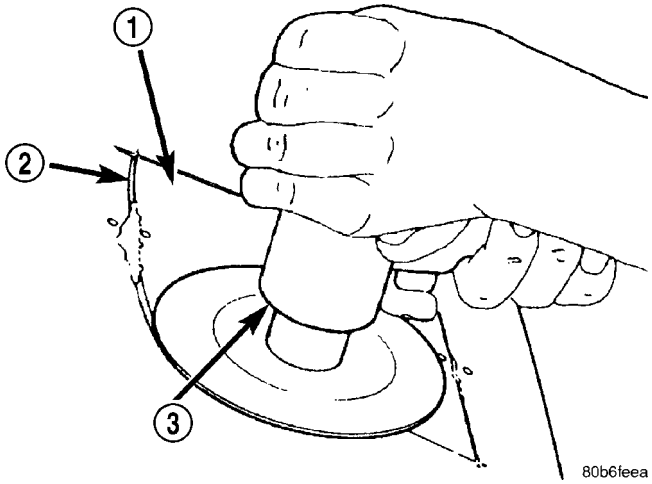

Fig. 13 GRIND SURFACE

1 - PATCH
2 - GAP
3 - DISC GRINDER

PATCHED PANEL SURFACING

After patch panel is installed, the patch area can be finished using the same methods as finishing other types of body panels. If mesh material is exposed in the patched area, grind surface down, and apply a coat of high quality rigid plastic body filler. Prime, block sand, and paint as required.

BODY (Continued)

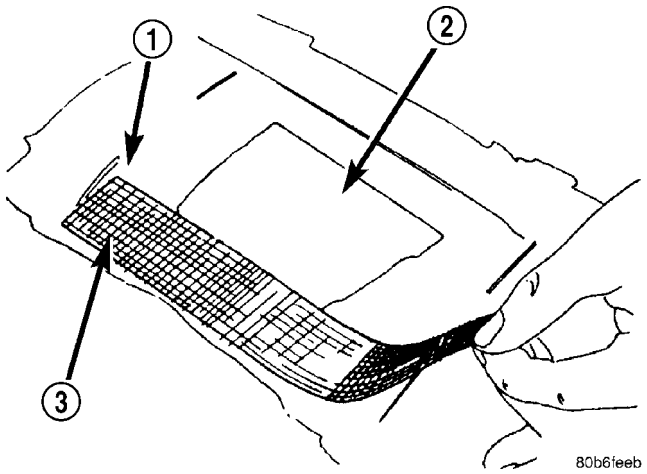

Fig. 14 COVER GAPS WITH MESH

1 - GROUND DOWN AREA
2 - PATCH
3 - MESH

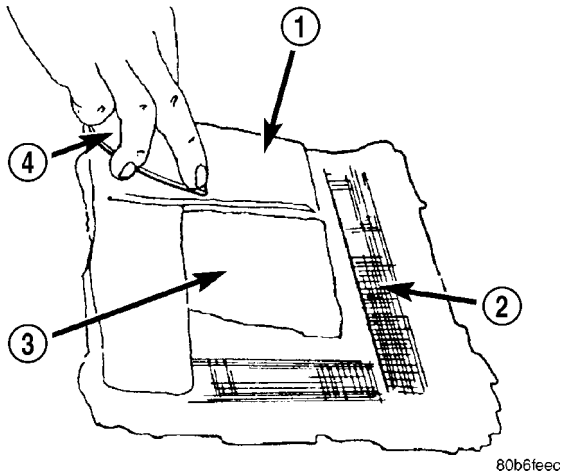

Fig. 15 COVER MESH WITH ADHESIVE

1 - ADHESIVE
2 - MESH
3 - PATCH
4 - SPREADER

STANDARD PROCEDURE - HEAT STAKING

(1) Remove trim panel.

(2) Bend or move the trim panel components at the heat staked joints. Observe the heat staked locations and/or component seams for looseness.

(3) Heat stake the components.

(a) If the heat staked or component seam location is loose, hold the two components tightly together and using a soldering gun with a flat tip, melt the material securing the components together. Do not over heat the affected area, damage to the exterior of the trim panel may occur.

(b) If the heat staked material is broken or missing, use a hot glue gun to apply new material to the area to be repaired. The panels that are being heat staked must be held together while the applying the glue. Once the new material is in place, it may be necessary to use a soldering gun to melt the newly applied material. Do not over heat the affected area, damage to the exterior of the trim panel may occur.

(4) Allow the repaired area to cool and verify the repair.

(5) Install trim panel.

SPECIFICATIONS

BODY LUBRICATION

LUBRICATION REQUIREMENTS

Body mechanisms and linkages should be inspected, cleaned, and lubricated, as required, to maintain ease of operation and to provide protection against rust and wear. When performing other under hood services, the hood latch release mechanism and safety catch should be inspected, cleaned, and lubricated. During the winter season, external door lock cylinders should be lubricated to assure proper operation when exposed to water and ice.

Prior to the application of any lubricant, the parts concerned should be wiped clean to remove dust and grit. If necessary, a suitable solvent can be used to clean the item to be lubricated. After lubricating a component, any excess oil or grease should be removed.

LUBRICANT APPLICATION

DOOR LOCK CYLINDERS

(1) Apply a small amount of lubricant directly into the lock cylinder.

(2) Apply a small amount of lubricant to the key.

(3) Insert key into lock cylinder and cycle the mechanism from the locked to the unlocked position.

NOTE: Do not add more lubricant.

(4) Cycle the lock cylinder mechanism several times to allow the lubricant to flow throughout the cylinder.

(5) Wipe all lubricant from exterior of lock cylinder and key.

ALL OTHER BODY MECHANISMS

(1) Clean component as described above.

(2) Apply specified lubricant to all pivoting and sliding contact areas of component.

BODY (Continued)

LUBRICANT USAGE

ENGINE OIL

- Door Hinges – Hinge Pin and Pivot Contact Areas
- Hood Hinges – Pivot Points
- Liftgate Hinges

MOPAR® SPRAY WHITE LUBE OR EQUIVALENT

- Door Check Straps
- Liftgate Latches
- Liftgate Prop Pivots
- Ash Receiver
- Fuel Filler Door Remote Control Latch Mechanism
- Parking Brake Mechanism
- Sliding Seat Tracks
- Liftgate Latch

MOPAR® Multipurpose GREASE OR EQUIVALENT

- All Other Hood Mechanisms

MOPAR® LOCK CYLINDER LUBRICANT OR EQUIVALENT

- Door Lock Cylinders
- Liftgate Lock Cylinder

SPECIFICATIONS - TORQUE

DESCRIPTION	N·m	Ft. Lbs.	In. Lbs.
All seat belt anchor bolts	40 N·m	30 ft. lbs.	—
All seat belt anchor nuts	40 N·m	30 ft. lbs.	—
All seat belt retractor bolts	40 N·m	30 ft. lbs.	—
Liftgate latch striker	22 N·m	16 ft. lbs.	—
Front seat track to floor pan bolts	55 N·m	40 ft. lbs.	—
Front seat inboard pivot bolt	40 N·m	30 ft. lbs.	—
Front seat recliner to seat cushion frame	12 N·m	9 ft. lbs.	—
Front seat track to cushion frame bolt	12 N·m	9 ft. lbs.	—
Front seat back	40 N·m	30 ft. lbs.	—
Front seat back recliner to seat back	12 N·m	9 ft. lbs.	—

DESCRIPTION	N·m	Ft. Lbs.	In. Lbs.
Front door hinge to hinge pillar bolt	28 N·m	21 ft. lbs.	—
Front door hinge to door nuts and bolt	28 N·m	21 ft. lbs.	—
Front door latch striker	28 N·m	20 ft. lbs.	—
Hood latch striker	13.5 N·m	10 ft. lbs.	—
Rear door glass to regulator bolt	11 N·m	105 in. lbs.	—
Rear door hinge to B-pillar bolt	28 N·m	20 ft. lbs.	—
Rear door latch striker	28 N·m	20 ft. lbs	—
Rear seat back and seat belt buckle anchor nut	57 N·m	42 ft. lbs.	—

BODY (Continued)

SPECIAL TOOLS

BODY

INDEX

DESCRIPTION	FIGURE
STICK, TRIM C 4755	16
REMOVER, MOLDINGS C-4829	17
PLIERS, HEADLINER CLIP 6967	18

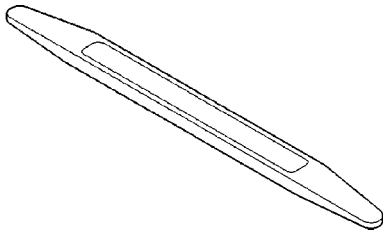

Fig. 16 STICK, TRIM C 4755

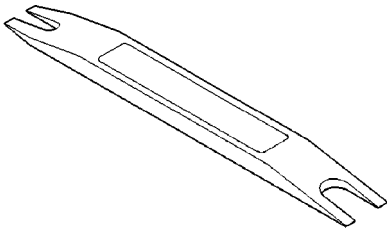

Fig. 17 REMOVER, MOLDINGS C-4829

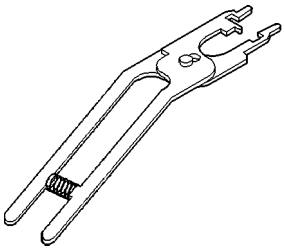

Fig. 18 PLIERS, HEADLINER CLIP 6967

LIFTGATE

TABLE OF CONTENTS

	page
LIFTGATE CHMSL ACCESS PANEL	
REMOVAL	13
INSTALLATION	13
LIFTGATE OUTSIDE HANDLE	
REMOVAL	13
INSTALLATION	13
LIFTGATE HINGE	
REMOVAL	14
INSTALLATION	14
LIFTGATE LATCH	
REMOVAL	15
INSTALLATION	15
LIFTGATE INNER CONTROL ASSEMBLY PANEL	
REMOVAL	15
INSTALLATION	15
LATCH STRIKER	
REMOVAL	15
INSTALLATION	15
LIFTGATE	
REMOVAL	16
INSTALLATION	16
LIFTGATE LOCK CYLINDER	
REMOVAL	17
INSTALLATION	17
LIFTGATE SUPPORT ROD	
REMOVAL	17
INSTALLATION	17
LIFTGATE TRIM PANEL	
REMOVAL	18
INSTALLATION	18

LIFTGATE CHMSL ACCESS PANEL

REMOVAL

(1) Using a trim stick (C-4755), disengage clips holding CHMSL cover trim to liftgate (Fig. 1) .

(2) Remove CHMSL cover trim from vehicle.

INSTALLATION

(1) Place CHMSL cover trim in position on vehicle (Fig. 1) .

(2) Press tabs into position to hold CHMSL cover trim to liftgate.

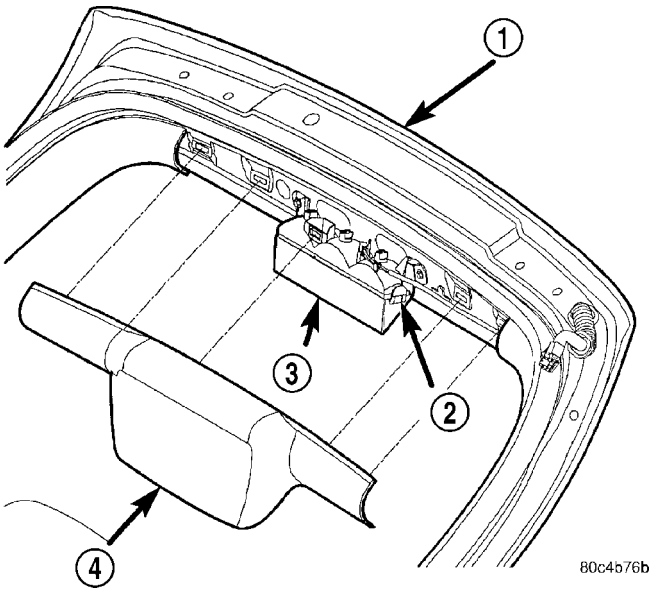

Fig. 1 CHMSL COVER TRIM

1 - LIFTGATE
2 - SNAP
3 - CHMSL LAMP
4 - CHMSL COVER

LIFTGATE OUTSIDE HANDLE

REMOVAL

(1) Remove liftgate trim (Fig. 3).

(2) Disconnect latch linkage and electrical connectors from liftgate control assembly (Fig. 2).

(3) Remove liftgate control assembly from liftgate.

(4) Remove fasteners attaching liftgate outside handle.

(5) Using a heat gun, apply heat to the wings to loosen the double sided tape for removal of the handle.

(6) Clean surface of any residua.

INSTALLATION

(1) Place liftgate outside handle into position. Remove protected cover from the two side tape (Fig. 3) .

LIFTGATE OUTSIDE HANDLE (Continued)

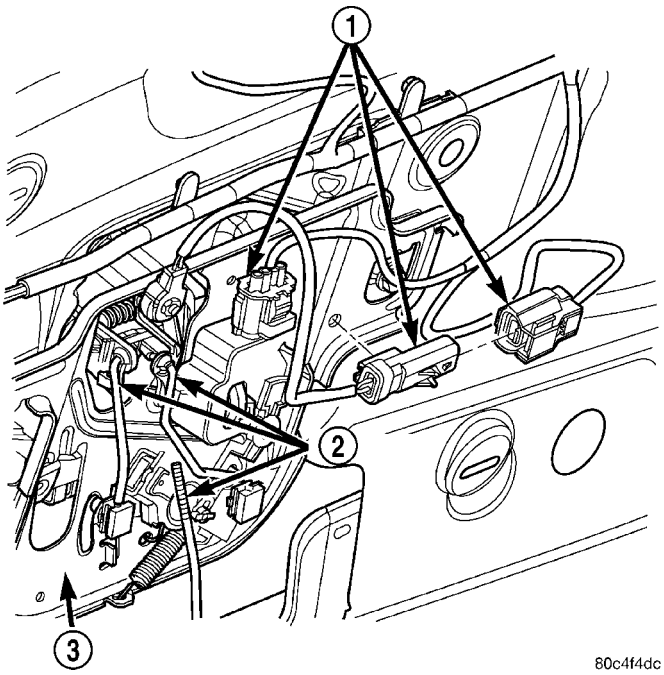

Fig. 2 LINKAGE AND ELECTRICAL CONNECTORS REMOVAL/INSTALLATION

1 - ELECTRICAL WIRING CONNECTORS
2 - LINKAGE
3 - CONTROL ASSEMBLY

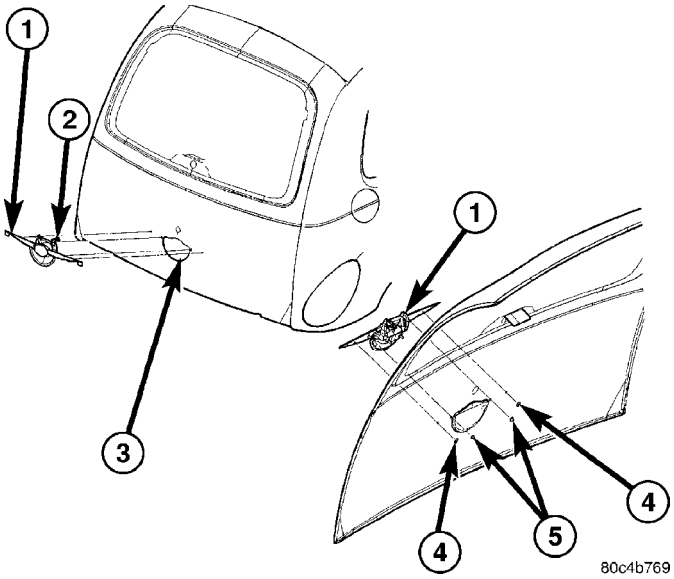

Fig. 3 LIFTGATE OUTSIDE HANDLE

1 - LIFTGATE OUTSIDE HANDLE
2 - PULL LEVER ARM
3 - LIFTGATE
4 - ATTACHING PUSH NUTS
5 - ATTACHING NUTS

(2) Install handle fasteners. Tighten two nuts to 7 N·m (60 in. lbs.).

(3) Install liftgate control assembly onto liftgate.

(4) Connect latch linkages and electrical connectors (Fig. 2) .

(5) Install liftgate trim panel.

LIFTGATE HINGE

REMOVAL

(1) Release liftgate latch and open liftgate.

(2) Support liftgate on a suitable lifting device in the full open position.

(3) Apply several layers of duct tape on the outside of to roof across the gap to the lift gate to hold the liftgate in position.

(4) Remove bolts attaching liftgate hinge to roof header.

(5) Remove bolts attaching hinge to liftgate (Fig. 4).

(6) Remove hinge from vehicle.

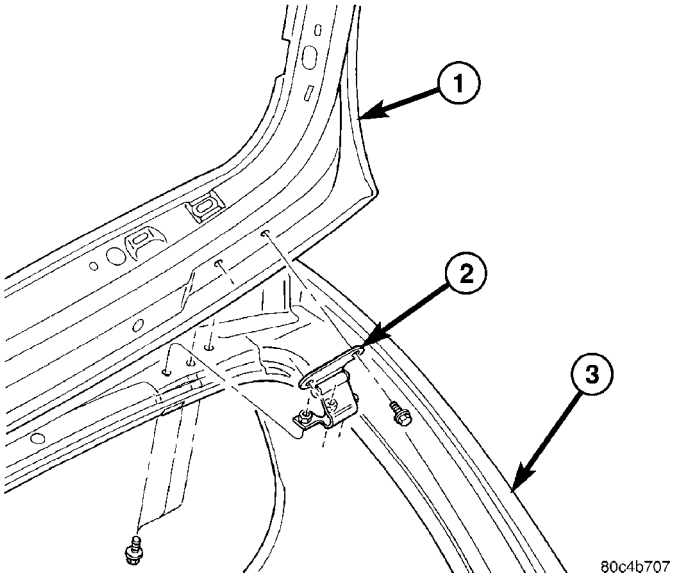

Fig. 4 LIFTGATE HINGE

1 - LIFTGATE
2 - LIFTGATE HINGE
3 - LIFTGATE OPENING

INSTALLATION

(1) If necessary, paint replacement hinge before installation.

(2) Place hinge in position on vehicle (Fig. 4).

(3) Align hinge to marks on liftgate.

(4) Install bolts attaching hinge to liftgate. Tighten bolts to 33 N·m (24 ft. lbs.) torque.

(5) Align hinge to marks on roof header.

(6) Install bolts attaching liftgate hinge to roof header. Tighten outer two bolts to 33 N·m (24 ft. lbs.) torque. The sheet medal screw at center 12 N·m (105 in. lbs.)

(7) Remove duct tape from roof and liftgate.

LIFTGATE HINGE (Continued)

(8) Verify liftgate alignment. Refer to Liftgate Remove and Installation for proper gap measurements.

LIFTGATE LATCH

REMOVAL

(1) Remove liftgate trim panel.
(2) Disengage outside handle link from clip on latch.
(3) Disconnect wire connector from liftgate ajar switch (Fig. 5).
(4) Remove screws attaching latch to liftgate.
(5) Remove latch from vehicle.

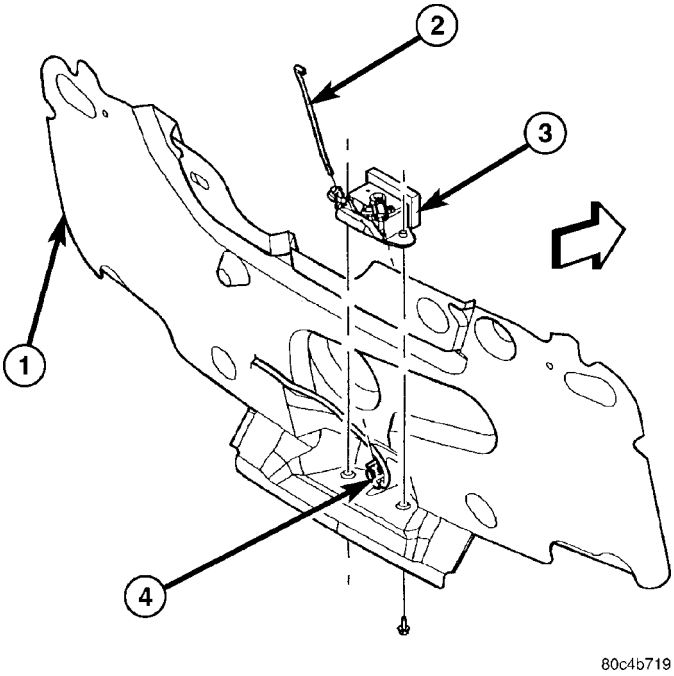

Fig. 5 LIFTGATE LATCH

1 - WATER SHIELD LIFTGATE INNER PANEL
2 - CONTROL ASSEMBLY TO LIFTGATE LATCH LINK
3 - LIFTGATE LATCH
4 - WIRING CONNECTOR

INSTALLATION

(1) Place latch in position on vehicle.
(2) Install screws attaching latch to liftgate. Tighten to 16 N·m (12 ft. lbs.) torque (Fig. 5) .
(3) Pull downward on outside handle link and engage link to clip on latch.
(4) Connect wire connector to liftgate ajar switch.
(5) Verify liftgate fit and operation. Adjust as necessary.
(6) Install liftgate trim panel.

LIFTGATE INNER CONTROL ASSEMBLY PANEL

REMOVAL

(1) Remove liftgate trim panel.
(2) Disconnect linkage (Fig. 6).
(3) Remove fasteners attaching control assembly inner panel.
(4) Remove control assembly inner panel from vehicle.

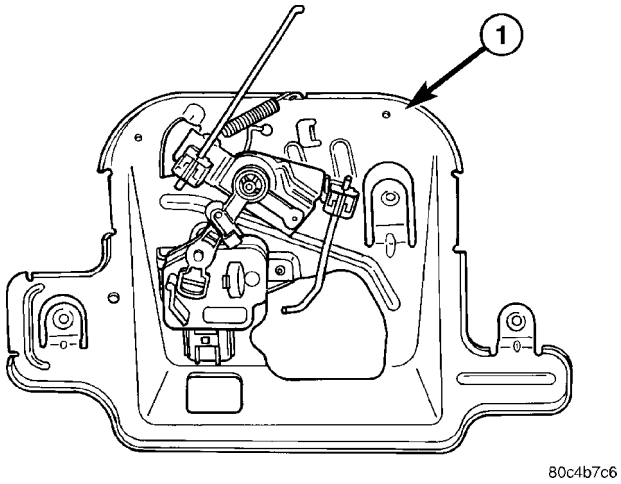

Fig. 6 LIFTGATE CONTROL ASSEMBLY INNER PANEL

1 - LIFTGATE CONTROL ASSEMBLY INNER PANEL

INSTALLATION

(1) Place into position control assembly inner panel (Fig. 6) .
(2) Tighten control assembly inner panel fasteners.
(3) Verify liftgate operation.

LATCH STRIKER

REMOVAL

(1) Open liftgate.
(2) Mark outline of striker on sill to aid installation.
(3) Remove screws attaching striker to sill (Fig. 7).
(4) Remove striker from vehicle.

INSTALLATION

(1) Place striker in position on vehicle (Fig. 7) .
(2) Align striker to outline mark on sill.
(3) Install screws attaching striker to sill. Tighten screws to 28 N·m (21 ft. lbs.) torque.
(4) Verify liftgate alignment and operation.

LATCH STRIKER (Continued)

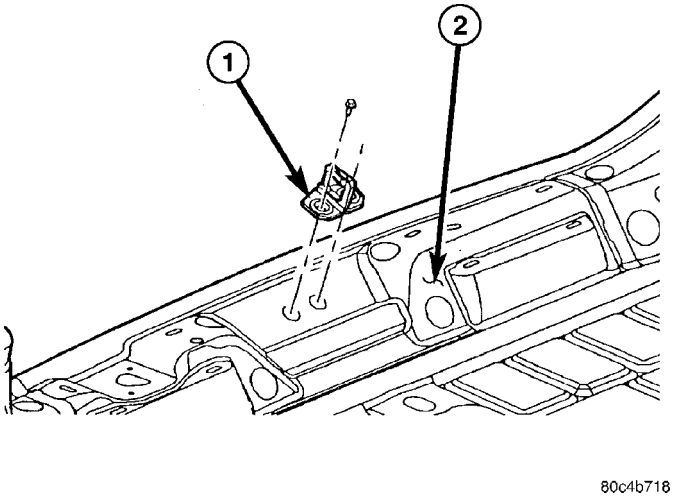

Fig. 7 LIFTGATE LATCH STRIKER

1 - LIFTGATE LATCH STRIKER
2 - LIFTGATE OPENING LOWER CENTER PANEL

LIFTGATE

REMOVAL

(1) Release liftgate latch and open liftgate.

(2) Remove screws attaching liftgate wire connector to rear header.

(3) Disconnect liftgate wire harness from body wire harness.

(4) Remove liftgate upper frame molding.

(5) Disconnect rear window washer hose from spray nozzle.

(6) Support liftgate on a suitable lifting device.

(7) Remove screws attaching support cylinders to liftgate.

(8) Remove bolts attaching liftgate hinge to roof header (Fig. 8).

(9) With assistance, remove liftgate from vehicle.

INSTALLATION

(1) With assistance, place liftgate in position on vehicle.

(2) Install bolts attaching liftgate hinge to roof header. Tighten bolts to 33 N·m (24 ft. lbs.) torque (Fig. 8) .

(3) Install screws attaching support cylinders to liftgate. Tighten bolts to 28 N·m (21 ft. lbs.) torque.

(4) Remove lifting device from under liftgate.

(5) Connect liftgate wire harness into body wire harness.

(6) Install screws attaching wire connector to rear header.

(7) Connect rear window washer hose onto spray nozzle.

(8) Install liftgate upper frame molding.

(9) Verify liftgate alignment. The liftgate should have a gap to adjacent panels and fit flush across the gaps. The gap is;

- 7 mm (0.280 in.) to the fascia,
- 6 mm (0.240 in.) to the roof,
- 4 mm (0.160 in.) to the aperture.

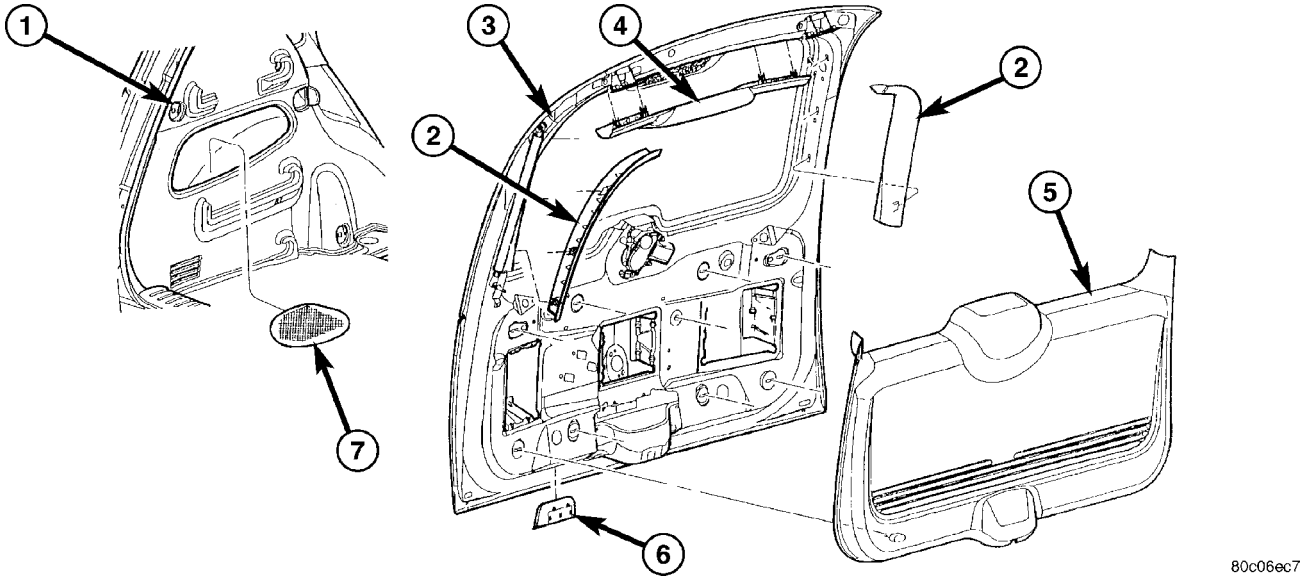

Fig. 8 LIFTGATE

1 - EDGE OF LIFTGATE TROUGH
2 - LIFTGATE HALO
3 - LIFTGATE
4 - CHMSL COVER TRIM
5 - LIFTGATE TRIM PANEL
6 - LIFTGATE PULL CUP
7 - REAR CONVENIENCE BEZEL

LIFTGATE LOCK CYLINDER

REMOVAL

NOTE: Do not remove E-clip.

(1) Remove outside liftgate handle.
(2) Remove lock cylinder clip from handle (Fig. 9).
(3) Remove lock cylinder and arm from handle.

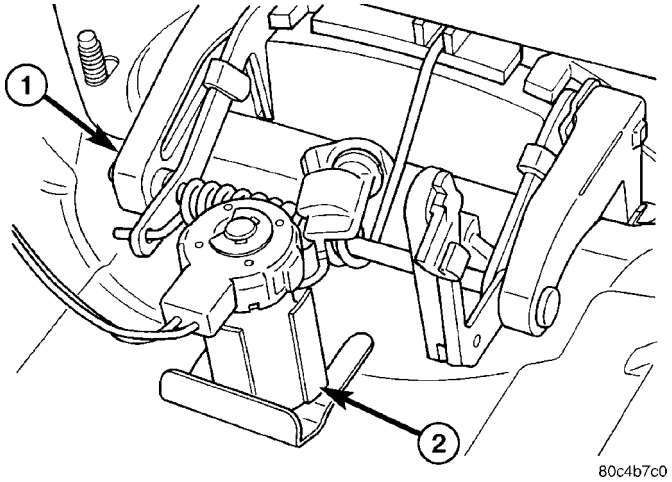

Fig. 9 LOCK CYLINDER REMOVAL

1 - LIFTGATE HANDLE
2 - LIFTGATE LOCK CYLINDER

INSTALLATION

(1) Install lock cylinder clip into liftgate (Fig. 9) .
(2) Push lock cylinder into handle until clip engages groove in lock cylinder with an audible click.
(3) Install outside liftgate handle.
(4) Verify lock cylinder operation.

LIFTGATE SUPPORT ROD

REMOVAL

(1) Release liftgate latch and open liftgate.
(2) Support liftgate on a suitable lifting device in the full open position.
(3) Pull liftgate opening weatherstrip from D-pillar flange next to prop assembly end pivot.
(4) Remove bolt attaching end pivot to D-pillar (Fig. 10).
(5) Remove bolt attaching prop assembly to liftgate.
(6) Remove prop assembly from vehicle.

INSTALLATION

Ensure that the cylinder end is attached to the D-pillar and the shaft end is attached to the liftgate (Fig. 10).
(1) Place prop assembly position.
(2) Install bolt attaching prop assembly to liftgate.

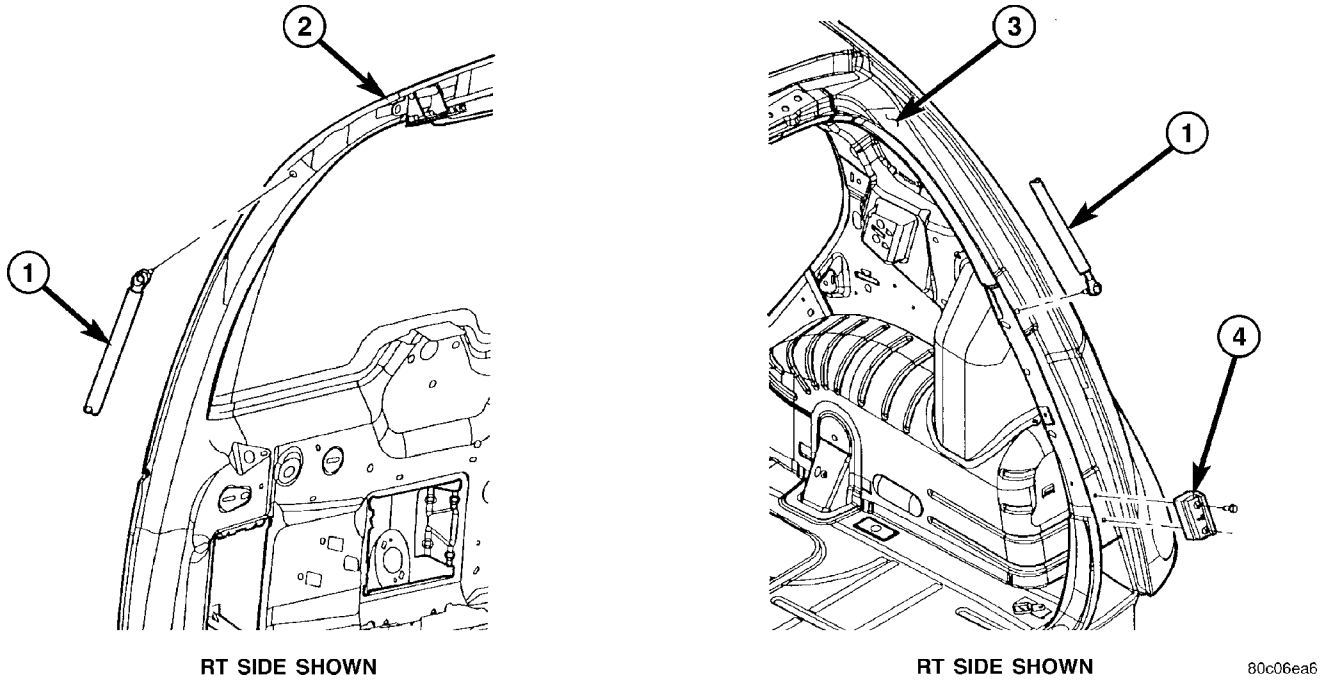

Fig. 10 LIFTGATE PROP ASSEMBLY

1 - LIFTGATE GAS PROP ROD
2 - LIFTGATE ASSEMBLY
3 - LIFTGATE SIDE DRAIN TROUGH
4 - DRAIN TROUGH OUTER STABLE BUMPER

LIFTGATE SUPPORT ROD (Continued)

(3) Install bolt attaching end pivot to D-pillar. Tighten bolts to 28 N·m (21 ft. lbs.) torque.

(4) Install liftgate opening weatherstrip to D-pillar flange next to prop assembly end pivot.

(5) Close liftgate. Check liftgate operation.

LIFTGATE TRIM PANEL

REMOVAL

(1) Open liftgate.

(2) Using a trim stick (C-4755), disengage clips attaching CHMSL cover trim to liftgate (Fig. 1).

(3) Remove CHMSL cover trim from vehicle.

(4) Using a trim stick (C-4755), disengage clips attaching liftgate halo trim panels both sides (Fig. 8).

(5) Remove halo trim panels trim from vehicle.

(6) Using a trim stick (C-4755), disengage clips attaching liftgate trim panel (Fig. 8).

(7) Remove liftgate trim panel trim from vehicle.

INSTALLATION

(1) Place liftgate trim panel in position on vehicle (Fig. 8).

(2) Press tabs into position to attaching liftgate trim panel to liftgate.

(3) Place liftgate halo trim panels in position on vehicle, both sides (Fig. 8).

(4) Press tabs into position to attaching liftgate halo trim panels to liftgate.

(5) Place CHMSL cover trim in position on vehicle (Fig. 1).

(6) Press tabs into position to hold CHMSL cover trim to liftgate.

(7) Close liftgate.

DOOR - FRONT

TABLE OF CONTENTS

	page
FRONT DOOR APPLIQUE	
REMOVAL	19
INSTALLATION	19
FRONT DOOR CHECK STRAP	
REMOVAL	20
INSTALLATION	20
FRONT DOOR	
REMOVAL	20
INSTALLATION	20
FRONT DOOR GLASS	
REMOVAL	21
INSTALLATION	21
FRONT DOOR OUTSIDE HANDLE	
REMOVAL	21
INSTALLATION	21
FRONT DOOR HINGE	
REMOVAL	22
INSTALLATION	22
FRONT DOOR INSIDE HANDLE ACTUATOR	
REMOVAL	22
INSTALLATION	23
FRONT DOOR LATCH	
REMOVAL	23
INSTALLATION	23
ADJUSTMENTS	
FRONT DOOR LATCH ADJUSTMENT	24
FRONT DOOR LATCH STRIKER	
REMOVAL	24
INSTALLATION	24
FRONT DOOR LOCK CYLINDER	
REMOVAL	25
INSTALLATION	25
FRONT DOOR VERTICAL GUIDE BAR	
REMOVAL	25
INSTALLATION	25
SIDE VIEW MIRROR TRIM BEZEL	
REMOVAL	25
INSTALLATION	25
FRONT DOOR TRIM PANEL	
REMOVAL	25
INSTALLATION	25
FRONT DOOR WATER DAM	
REMOVAL	26
INSTALLATION	27
FRONT DOOR WINDOW REGULATOR	
REMOVAL	27
INSTALLATION	27

FRONT DOOR APPLIQUE

REMOVAL

(1) Open front door.

(2) Remove screw attaching outside belt weatherstrip and remove from door (Fig. 1).

(3) Remove glass run weatherstrip as necessary to access the three screws attaching applique (Fig. 2).

(4) Remove the three screws attaching applique and remove applique from door (Fig. 3).

INSTALLATION

(1) Place applique into position.

(2) Install the three attaching screws (Fig. 3).

(3) Install glass run weatherstrip into position (Fig. 2).

(4) Place outside belt weatherstrip into position and install attaching screw (Fig. 1).

(5) Close door

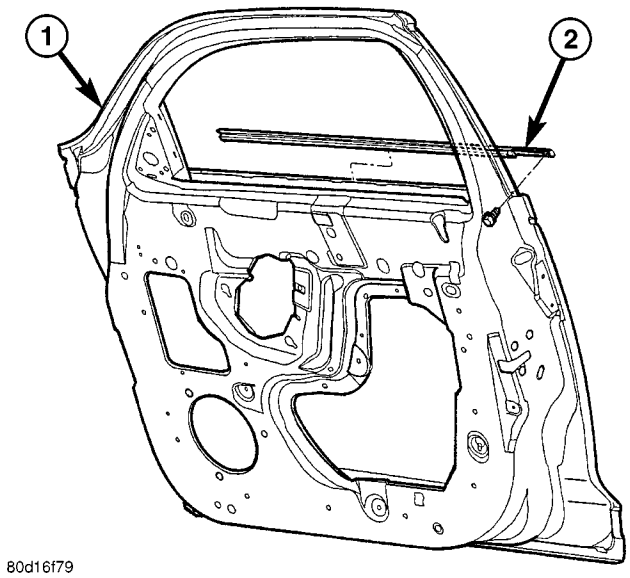

Fig. 1 GLASS RUN WEATHERSTRIP

1 - FRONT DOOR
2 - FRONT DOOR OUTSIDE BELT WEATHERSTRIP

FRONT DOOR APPLIQUE (Continued)

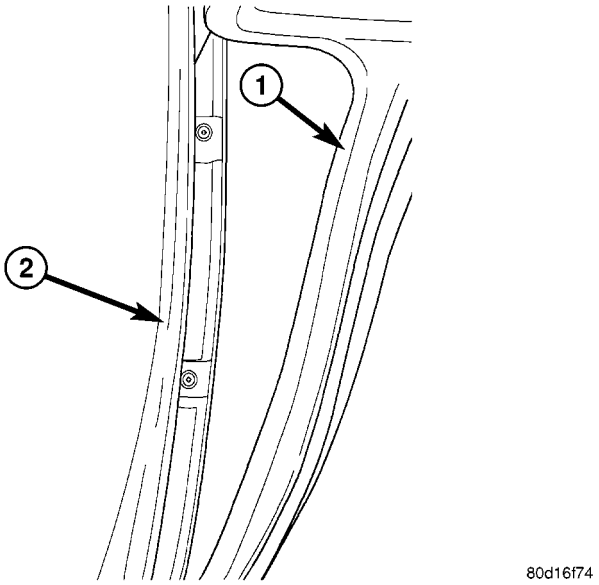

Fig. 2 FRONT DOOR OUTSIDE BELT WEATHERSTRIP

1 - GLASS RUN WEATHERSTRIP
2 - UPPER DOOR FRAME

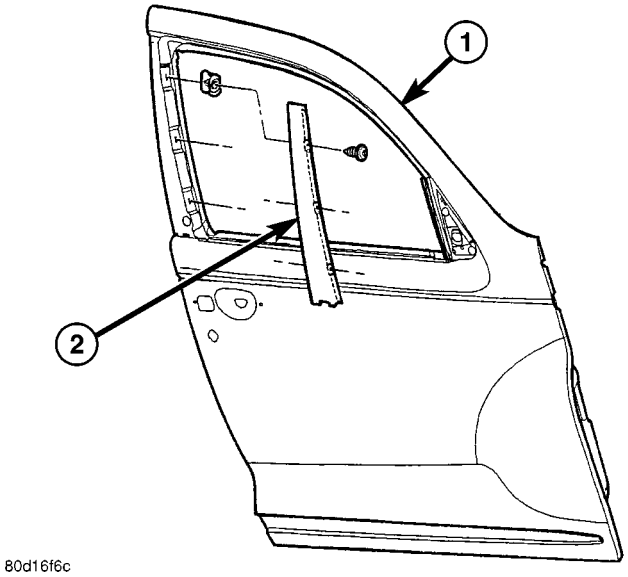

Fig. 3 FRONT DOOR B-PILLAR APPLIQUE

1 - FRONT DOOR
2 - FRONT DOOR B-PILLAR APPLIQUE

FRONT DOOR CHECK STRAP

REMOVAL

(1) Remove door trim panel and water dam.
(2) Remove bolt attaching check strap to hinge pillar.
(3) Remove door speaker.
(4) Remove glass run.
(5) Remove bolts attaching check strap to door end frame.
(6) Remove check strap and cover from vehicle.

INSTALLATION

NOTE: Do not grease check strap.

(1) Assemble check strap cover to check strap.
(2) Position door check on vehicle and install bolts attaching strap to door end frame.
(3) Install glass run.
(4) Install door speaker, if so equipped.
(5) Install bolt attaching door check strap to hinge pillar.
(6) Install door trim panel and water dam.

FRONT DOOR

REMOVAL

NOTE: The retaining clips used on the door hinge pins are not to be reused. Verify availability prior to proceeding.

(1) Open and support door on a suitable lifting device.
(2) Disconnect wire connector at hinge pillar, if necessary.
(3) Mark the location of the hinge.
(4) Remove bolts attaching door check strap to hinge pillar (Fig. 4).
(5) Remove bolts attaching lower hinge to door.
(6) Remove bolts attaching upper hinge to door.
(7) Remove door from vehicle.

INSTALLATION

(1) Align the hinge marks and position door to the hinges on vehicle (Fig. 4) .
(2) Install bolt into hinge top hole on the right side or bottom hole left side (smallest hole).
(3) Install bolt into hinge bottom hole on the right side or top hole left side (slotted hole).
(4) Install bolts attaching door check strap to hinge pillar.
(5) Connect wire connector at hinge pillar, if necessary.
(6) Verify door flush and gap measurements, adjust as necessary.

FRONT DOOR (Continued)

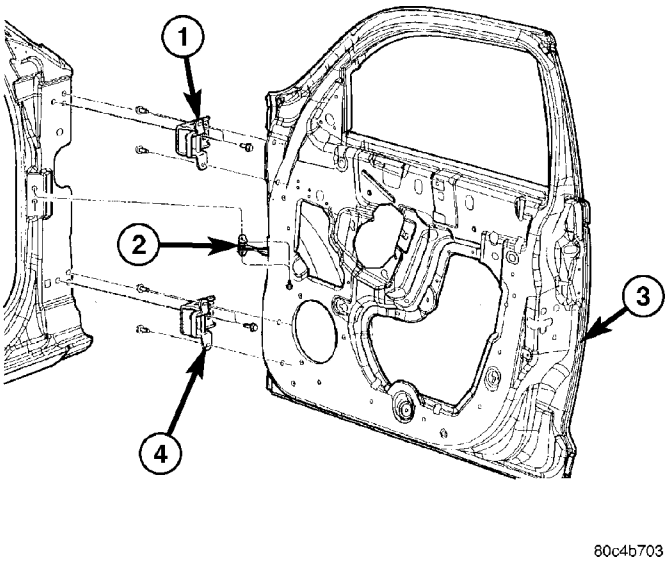

Fig. 4 FRONT DOOR HINGES

1 - FRONT DOOR UPPER HINGE
2 - FRONT DOOR CHECK STRAP
3 - FRONT DOOR
4 - FRONT DOOR LOWER HINGE

FRONT DOOR GLASS

REMOVAL

(1) Remove door trim panel and water dam.
(2) Remove inner door belt weatherstrip (Fig. 5).
(3) Lower door glass to bottom of door to gain access to attaching bolts.
(4) Loosen bolts attaching door glass to window regulator lift plates.
(5) Disengage door glass from regulator.
(6) Lift door glass upward, tilting down at the front and up at the back, out of the opening at the top of door.

INSTALLATION

(1) Carefully lower door glass through opening in top of door.
(2) Position door glass into window regulator lift plates (Fig. 5) .
(3) Install bolts door glass to lift plates and do not tighten.
(4) Raise glass to the full up position and then tighten the lift plate bolts.
(5) Install inner door belt weatherstrip.
(6) Install door trim panel and water dam.

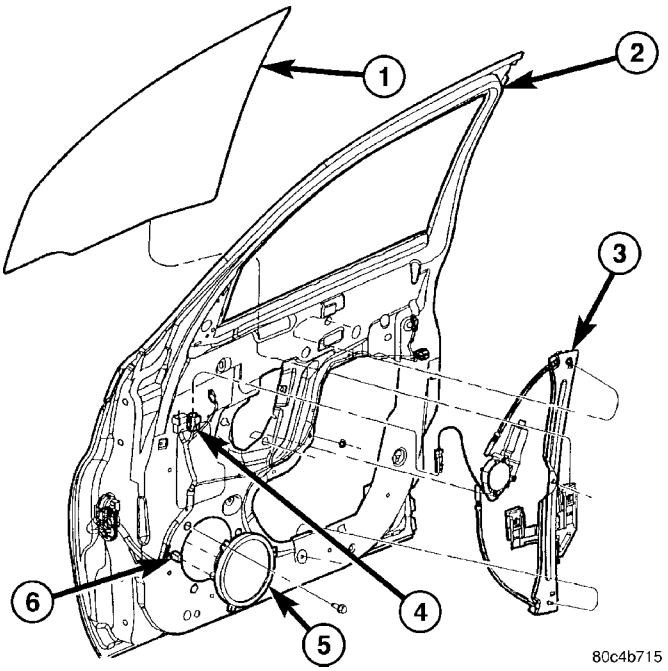

Fig. 5 FRONT DOOR GLASS - POWER WINDOW

1 - FRONT DOOR WINDOW GLASS
2 - FRONT DOOR
3 - FRONT DOOR WINDOW POWER REGULATOR
4 - POWER WINDOW REGULATOR WIRING CONNECTOR
5 - FRONT DOOR SPEAKER
6 - SPEAKER WIRE CONNECTOR

FRONT DOOR OUTSIDE HANDLE

REMOVAL

(1) Remove door trim panel and water dam.
(2) Move door glass to the up position.
(3) Disconnect outside door handle link to latch.
(4) Remove nut attaching outside door handle to outer door panel (Fig. 6).
(5) Remove door handle from vehicle.

INSTALLATION

(1) Install door handle latch link to handle.
(2) Position door handle into door (Fig. 6) .
(3) Install fasteners attaching door handle to outer door panel.
(4) Connect lock and latch rods to door latch.
(5) Install door trim panel and water dam.

FRONT DOOR OUTSIDE HANDLE (Continued)

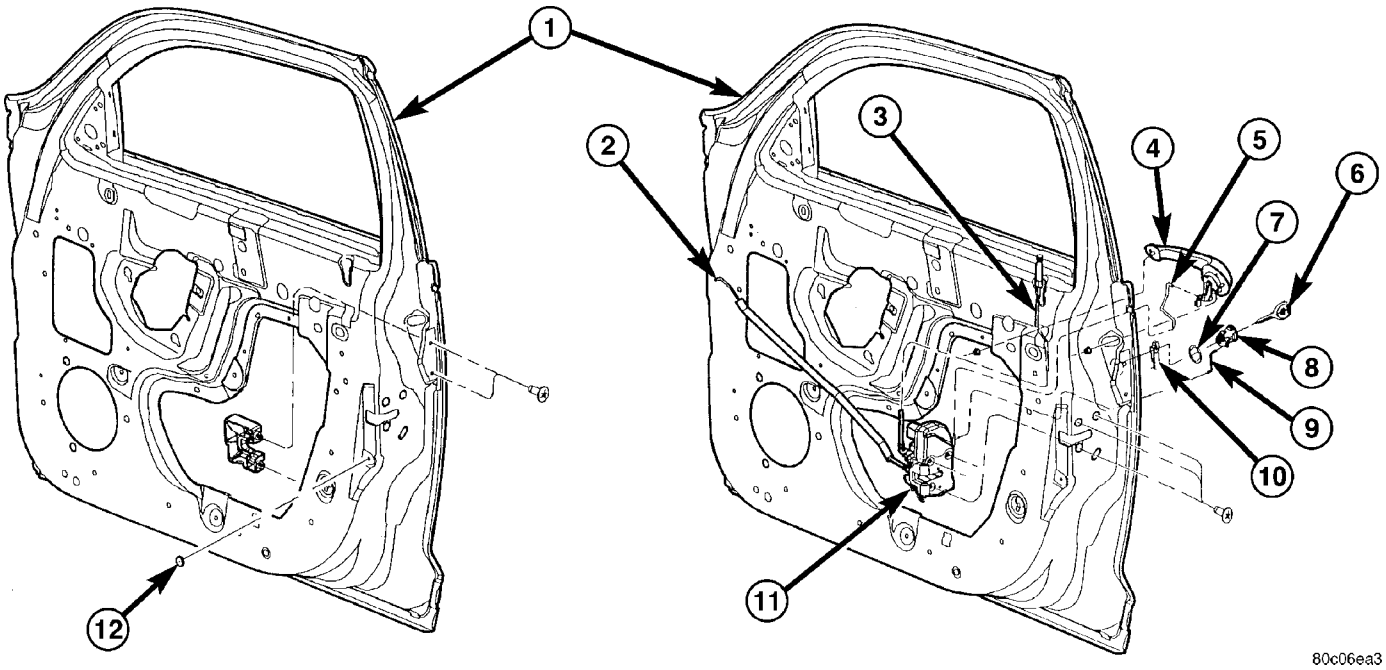

Fig. 6 FRONT DOOR OUTSIDE HANDLE

1 - FRONT DOOR
2 - FRONT DOOR INSIDE REMOTE HANDLE TO LATCH LINK & SLEEVE
3 - FRONT DOOR LOCK KNOB LINK TO LATCH
4 - FRONT DOOR OUTSIDE HANDLE
5 - FRONT DOOR OUTSIDE HANDLE TO LATCH LINK
6 - KEY
7 - KEY CYLINDER GASKET
8 - KEY CYLINDER
9 - FRONT DOOR KEY CYLINDER TO LATCH LINK
10 - CENTRAL LOCKING SWITCH
11 - FRONT DOOR OVERRIDE LOCKS LATCH
12 - FRONT DOOR AJAR SWITCH BUMPER

FRONT DOOR HINGE

REMOVAL

(1) Open and support door on a suitable lifting device.

(2) Remove bolts attaching door check strap to lower A-pillar for greater access, if necessary (Fig. 4) .

(3) Mark position of hinge on both the door end frame and lower A-pillar to ease installation.

(4) Remove bolts attaching hinge to door end frame.

(5) Remove bolts attaching hinge to lower A-pillar.

(6) Remove door hinge from vehicle.

INSTALLATION

CAUTION: When installing a new hinge, make sure that the head of each hinge pin is fully seated into the door hinge. Also, remove the plastic shipping clip and replace it with the correct metal retaining clip once the hinge pin is seated.

(1) If necessary, paint new door hinge prior to installation.

(2) Position door hinge on vehicle (Fig. 4) .

(3) Loosely install bolts attaching hinge to lower A-pillar.

(4) Loosely install bolts attaching hinge to door end frame.

(5) Align hinge to marks made previously and tighten all bolts.

(6) Install bolts attaching door check strap to lower A-pillar, if removed previously.

(7) Verify door fit and operation. Adjust door hinge for proper door alignment, if necessary.

FRONT DOOR INSIDE HANDLE ACTUATOR

REMOVAL

(1) Remove the door trim panel.

CAUTION: Do not use a drill to remove the heat stakes.

(2) Remove the heat stakes using a razor knife or equivalent and remove the door handle. (Fig. 7)

(3) Remove the front door inside remote handle/ power door lock switch bezel.

FRONT DOOR INSIDE HANDLE ACTUATOR (Continued)

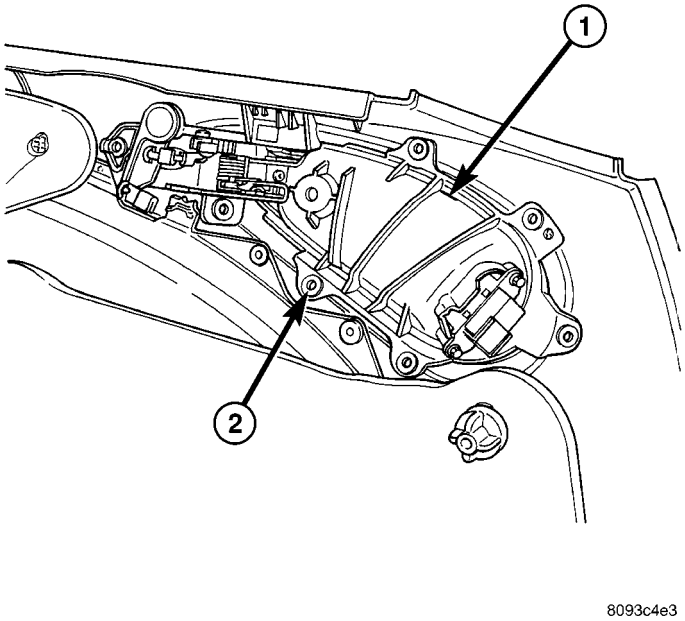

Fig. 7 INSIDE HANDLE ACTUATOR

1 - INSIDE HANDLE ACTUATOR
2 - HEAT STAKES

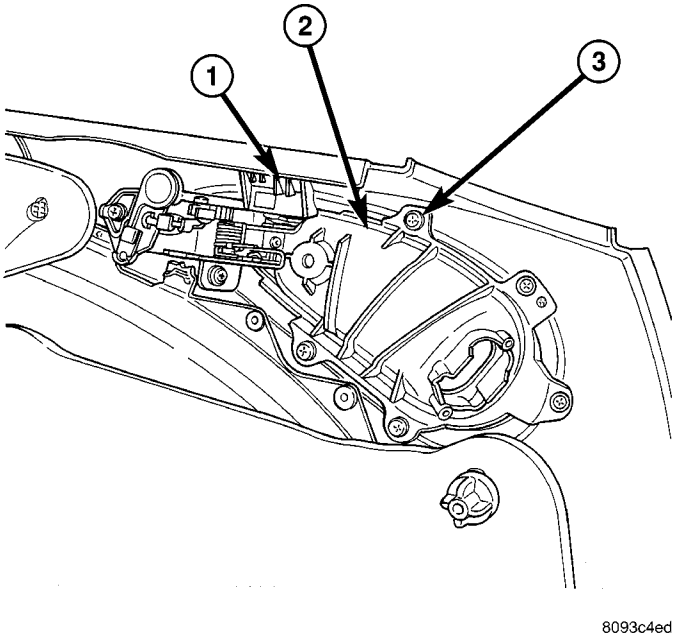

Fig. 8 FRONT DOOR INSIDE HANDLE ACTUATOR

1 - HEAT STAKE LOCATION
2 - INSIDE HANDLE ACTUATOR
3 - PHILLIPS TYPE SCREWS

INSTALLATION

NOTE: Clean the excess heat staking off of the studs to aid installation.

(1) Install the new inside door handle, install the screws and hand tighten. (Fig. 8)
(2) If necessary renew the upper heat stake. Refer to page 23-28 for heat staking procedure. (Fig. 8)
(3) Install the remote handle/power door lock switch bezel.
(4) Install the door trim panel.

FRONT DOOR LATCH

REMOVAL

(1) Remove door trim panel and water shield.
(2) Raise door glass.
(3) Disconnect lock and latch rods from door latch (Fig. 6)and (Fig. 9).
(4) Disengage wire connector from power door lock motor, if equipped.
(5) Remove screws attaching latch to door end frame.
(6) Remove door latch from vehicle.

INSTALLATION

CAUTION: Do not close door before adjusting the door latch. Door may fail to open.

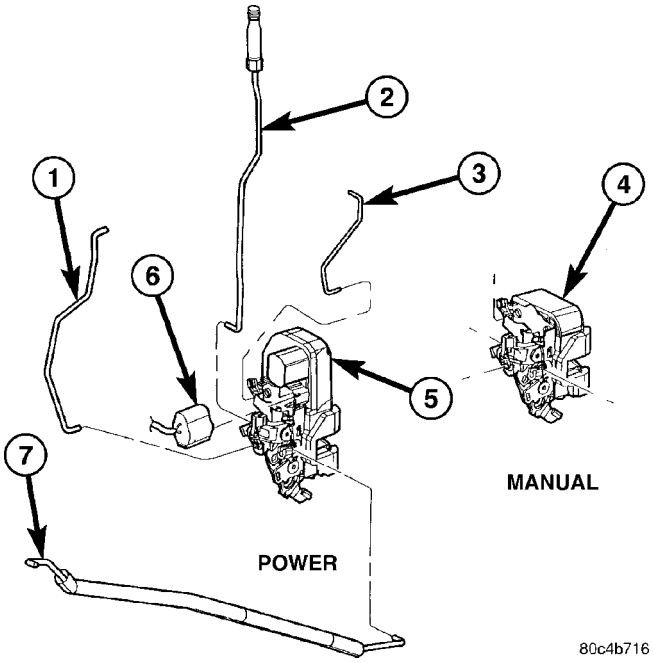

Fig. 9 FRONT DOOR LATCH

1 - FRONT DOOR OUTSIDE HANDLE TO LATCH LINK
2 - FRONT DOOR LOCK KNOB TO LATCH LINK
3 - FRONT DOOR KEY CYLINDER TO LATCH LINK
4 - FRONT DOOR OVERRIDE MANUAL LOCK LATCH
5 - FRONT DOOR OVERRIDE POWER LOCK LATCH
6 - FRONT DOOR OVERRIDE POWER LOCK LATCH CONNECTION
7 - FRONT DOOR INSIDE REMOTE HANDLE LINK AND SLEEVE TO LATCH

FRONT DOOR LATCH (Continued)

(1) Position door latch inside door and install screws holding latch to door end frame (Fig. 6) and (Fig. 9).

(2) Engage wire connector into power door lock motor, if so equipped.

(3) Connect latch and lock rods to door latch.

(4) Install door trim panel and water shield.

(5) Adjust door latch using procedure in this section.

ADJUSTMENTS

FRONT DOOR LATCH ADJUSTMENT

(1) Insert a Torx®-wrench through the elongated hole in the door end frame near the latch striker opening.

(2) Loosen Torx® head screw on the side of the latch linkage.

(3) Push button on outside door handle and release it.

(4) Tighten Torx® head screw on latch.

(5) Verify latch operation.

FRONT DOOR LATCH STRIKER

REMOVAL

(1) Mark outline of door latch striker on B-pillar to aid installation.

(2) Remove screws attaching door latch striker to B-pillar (Fig. 10).

INSTALLATION

(1) Install door latch striker into the door (Fig. 10).

(2) Install screws attaching door latch striker to B-pillar loosely.

(3) Align door latch striker to outline marks on the B-pillar

(4) Tighten screws attaching door latch striker to B-pillar.

(5) Check door alignment and adjust as necessary.

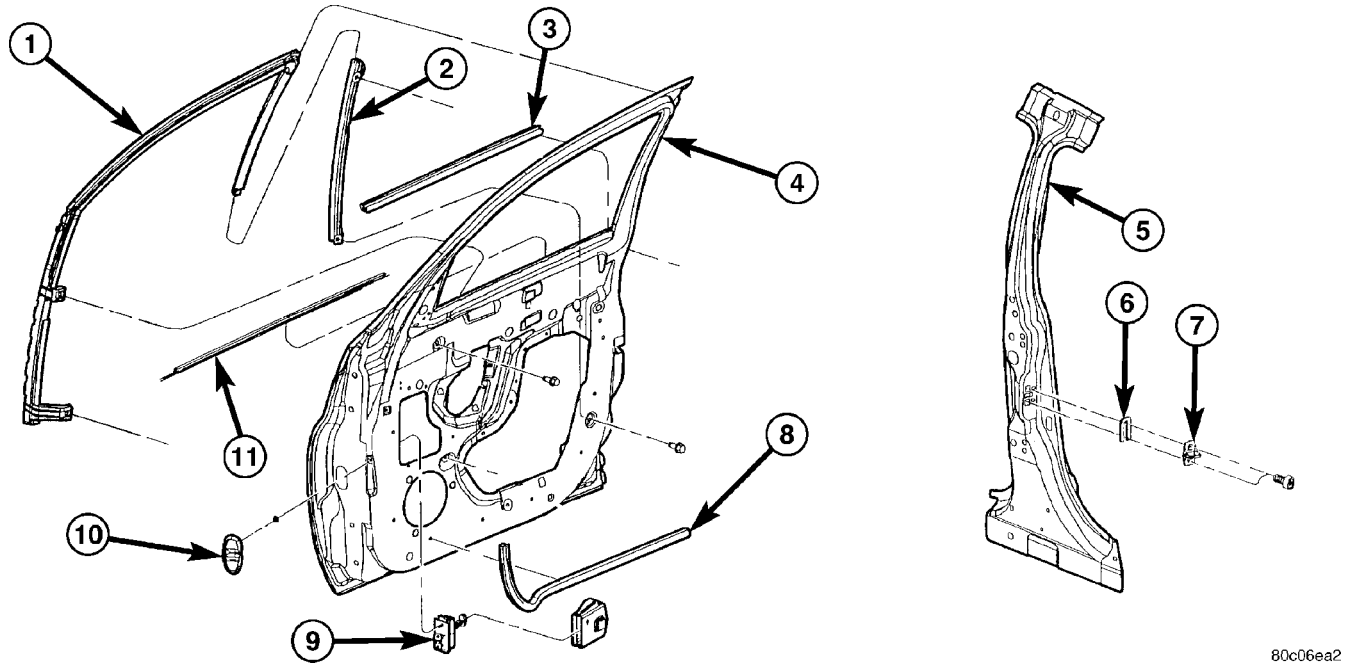

Fig. 10 FRONT DOOR WEATHERSTRIP AND LATCH STRIKER

1 - FRONT DOOR GLASS RUN WEATHERSTRIP
2 - FRONT DOOR GLASS LOWER REAR CHANNEL
3 - FRONT DOOR INNER BELT WEATHERSTRIP
4 - FRONT DOOR
5 - B-PILLAR
6 - FRONT DOOR LATCH STRIKER SPACER
7 - FRONT DOOR LATCH STRIKER
8 - FRONT DOOR SILL WEATHERSTRIP
9 - FRONT DOOR CHECK STRAP AND COVER
10 - FRONT DOOR CHECK STRAP SEAL
11 - FRONT DOOR OUTER BELT WEATHERSTRIP

FRONT DOOR LOCK CYLINDER

REMOVAL

(1) Remove door trim panel and water dam.
(2) Raise door glass.
(3) Disconnect door lock rod from latch (Fig. 6) .
(4) Disengage wiring from lock cylinder if so equipped.
(5) Remove fasteners attaching lock cylinder retainer to door.
(6) Remove lock cylinder retainer.
(7) Pull lock cylinder from door handle.

INSTALLATION

(1) Place lock cylinder and gasket into door outer panel (Fig. 6) .
(2) Install cylinder retainer to door.
(3) Connect door lock rod from latch.
(4) Engage wiring connectors, if equipped.
(5) Install door trim panel and water dam.

FRONT DOOR VERTICAL GUIDE BAR

REMOVAL

(1) Remove door trim panel and water dam.
(2) Remove door speaker, if equipped.
(3) Remove front lift guide.
(4) Remove bolt attaching top of front guide bar to inner door panel.
(5) Using a Snap-on® flare-nut socket (FRXM10) and a hex wrench, remove nut attaching bottom of guide bar to door panel while holding jack screws.

INSTALLATION

(1) Install nut attaching bottom of guide bar to door panel.
(2) Install bolt attaching top of front guide bar to inner door panel.
(3) Install front lift guide.
(4) Install door speaker, if equipped.
(5) Verify door glass alignment, adjust if necessary.
(6) Install door trim panel and water dam.

SIDE VIEW MIRROR TRIM BEZEL

REMOVAL

(1) Disengage clips attaching side view mirror trim bezel to stanchion. Left side only with manual mirrors .
(2) Remove mirror bezel from vehicle.

INSTALLATION

(1) Place mirror trim bezel in position.
(2) Engage clips attaching side view mirror trim bezel to stanchion.

FRONT DOOR TRIM PANEL

REMOVAL

(1) Release door latch and open door.
(2) Lower door glass.
(3) Remove screw from inside arm rest pull cup (Fig. 11).
(4) Remove fasteners from door trim panel.
(5) Remove screw from behind inside remote handle.
(6) Disengage push-in fasteners attaching trim to door panel around perimeter of trim panel.
(7) Tilt trim panel outward to clear locator pins on backside of trim panel.
(8) Disconnect trim panel from retainer channel in inner belt weatherstrip at top of door by lifting while gently jiggling.
(9) Move trim panel away from door and disengage clip attaching inside remote handle link.
(10) Remove inside remote handle link.

CAUTION: Do not allow door trim panel to hang by the wire connector or wiring.

(11) Disconnect wire connector from power door lock switch, mirror switch, and power window switch if so equipped.
(12) Remove trim panel from door.

INSTALLATION

(1) Replace any damaged or missing push in fasteners from around perimeter of door trim panel (Fig. 11) .
(2) Place trim panel near door.
(3) Connect wire connector into power door lock switch, mirror switch, and power window switch, if so equipped.
(4) Insert inside remote handle link into handle and engage clip.
(5) Install trim panel over lock knob and into inner belt retainer channel at top of door and push down to seat.
(6) Locate door trim panel to inner door panel by aligning locating pins on backside of trim panel to mating holes in inner door panel.
(7) Install push in fasteners to hold trim to door panel around perimeter of trim panel.
(8) Install screw behind inside remote handle.
(9) Install screw inside arm rest pull cup.

FRONT DOOR TRIM PANEL (Continued)

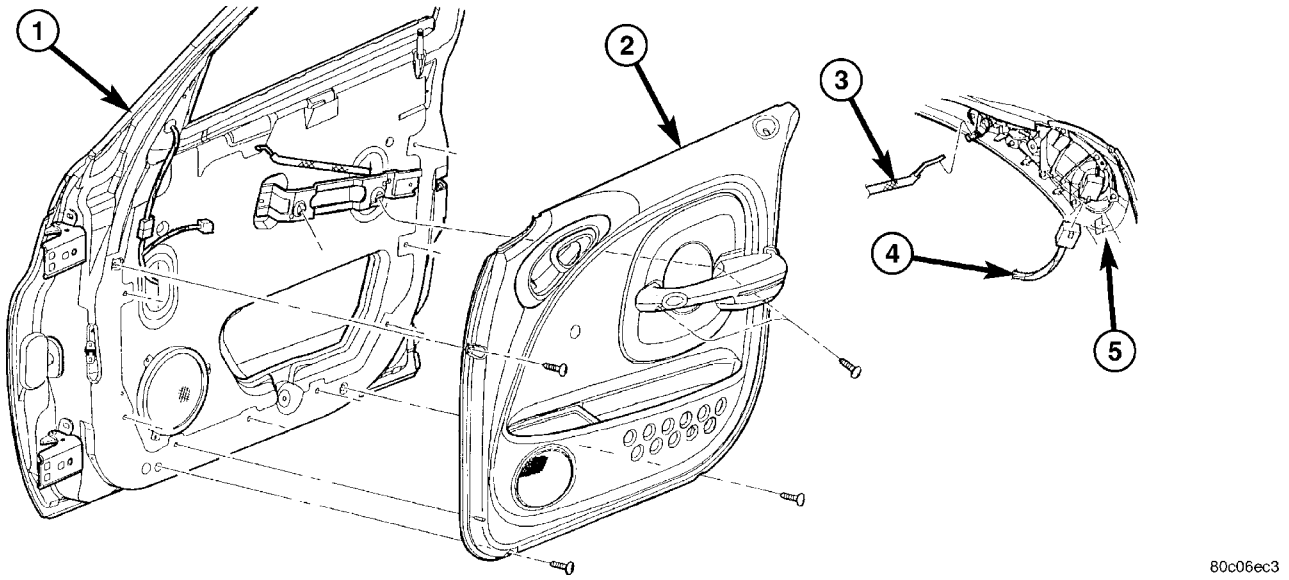

Fig. 11 FRONT DOOR TRIM

1 - FRONT DOOR
2 - FRONT DOOR TRIM PANEL
3 - FRONT DOOR INSIDE REMOTE HANDLE LINK AND SLEEVE TO LATCH
4 - FRONT DOOR WIRE CONNECTOR
5 - FRONT DOOR INSIDE REMOTE HANDLE/POWER DOOR LOCK SWITCH BEZEL

FRONT DOOR WATER DAM

REMOVAL

(1) Remove door trim panel.
(2) Remove door speaker, if equipped.
(3) Remove armrest to inner panel bracket.
(4) Disconnect outside power mirror and power window regulator connectors, if equipped.
(5) Peel water dam away from adhesive around perimeter of inner door panel (Fig. 12).

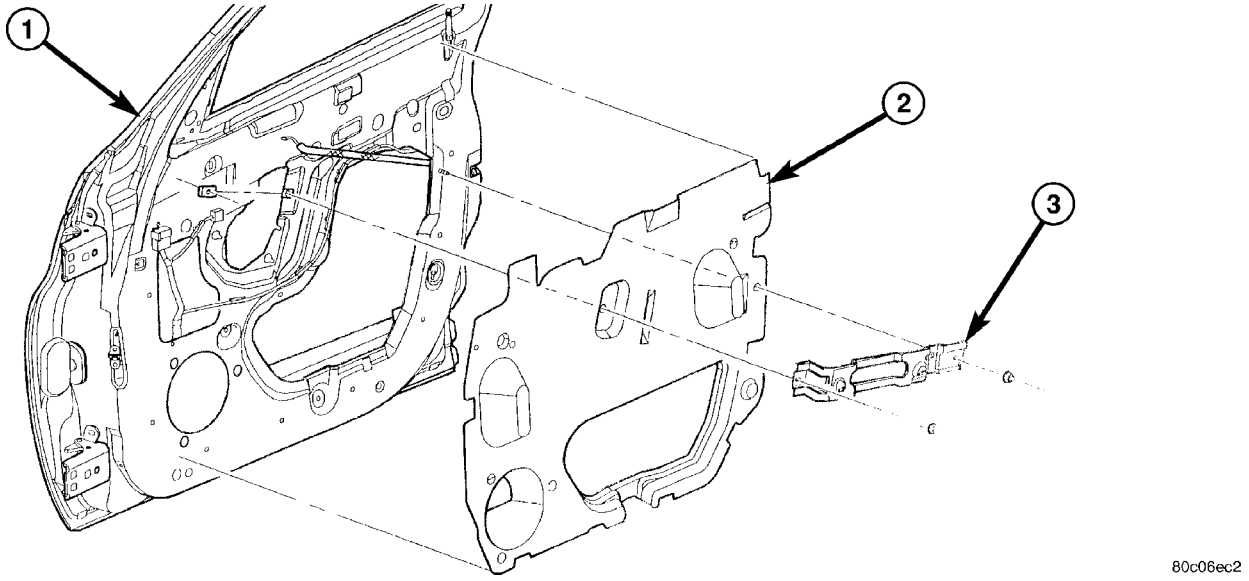

Fig. 12 WATER DAM

1 - FRONT DOOR
2 - FRONT DOOR WATER DAM
3 - FRONT DOOR ARMREST TO INNER PANEL ATTACHING BRACKET

FRONT DOOR WATER DAM (Continued)

INSTALLATION

(1) Insure that enough adhesive remains to securely retain the water dam. Replace as necessary (Fig. 12) .

(2) Place the water dam into position and press securely to adhesive making sure to properly route wiring and linkages.

(3) Engage clip attaching lock linkage to lock button bell-crank.

(4) Install door trim pull cup mount bracket.

(5) Install door speaker, if equipped.

(6) Install door trim panel.

FRONT DOOR WINDOW REGULATOR

REMOVAL

(1) Remove front door trim panel.

(2) Remove front door glass from regulator channel.

(3) Loosen screws attaching window regulator channel and crank housing to door panel (Fig. 5) .

(4) Disengage screw and bolt heads from keyhole slots in door panel.

(5) Loosen bolts attaching window regulator to door panel.

(6) Disengage regulator from door panel, and crank housing.

(7) Slide regulator rearward and rotate forward end of roller channel through access hole in door panel,

(8) Remove window regulator from door through access hole in inner panel.

INSTALLATION

(1) Position window regulator and crank housing on door panel through access hole in door panel (Fig. 5) .

(2) Tighten bolts attaching window regulator to door panel.

(3) Engage window regulator bolt heads on channel to key hole slots in door panel.

(4) Tighten screw attaching window regulator channel and crank housing.

(5) Position glass to regulator roller channel.

(6) Tighten fasteners attaching door glass to roller channel.

(7) Install door trim panel.

DOORS - REAR

TABLE OF CONTENTS

	page
REAR DOOR APPLIQUE	
REMOVAL	28
INSTALLATION	29
REAR DOOR CHECK STRAP	
REMOVAL	29
INSTALLATION	29
REAR DOOR	
REMOVAL	30
INSTALLATION	30
REAR DOOR GLASS	
REMOVAL	30
INSTALLATION	30
REAR DOOR OUTSIDE HANDLE	
REMOVAL	31
INSTALLATION	31
REAR DOOR HINGE	
REMOVAL	31
INSTALLATION	31
REAR DOOR LATCH	
REMOVAL	32
INSTALLATION	32
ADJUSTMENTS	
REAR DOOR LATCH ADJUSTMENT	32
REAR DOOR LATCH STRIKER	
REMOVAL	32
INSTALLATION	32
REAR DOOR TRIM PANEL	
REMOVAL	32
INSTALLATION	33
REAR DOOR WATER DAM	
REMOVAL	33
INSTALLATION	33
REAR DOOR WINDOW REGULATOR	
REMOVAL	34
INSTALLATION	34

REAR DOOR APPLIQUE

REMOVAL

(1) Open rear door.

(2) Lower door window to the lowest position (Fig. 1).

(3) Remove front and rear screws attaching outside belt weatherstrip and remove from door (Fig. 2).

(4) Remove glass run weatherstrip as necessary to access the three screws in the B-pillar applique. The glass run weatherstrip will need to be free of the glass on forward edge, so that the front edge of the glass can push outward to access the lower screw (Fig. 3).

(5) Place a shop towel between the tract and glass so that screw(s) do not fall in to the door opening.

(6) Remove screws attaching B-pillar applique.

(7) Remove B-pillar applique from door.

(8) To remove C-pillar applique pull glass run weatherstrip down as necessary to access the three screws in the C-pillar applique (Fig. 4).

(9) Remove screws attaching C-pillar applique.

(10) Remove C-pillar from door.

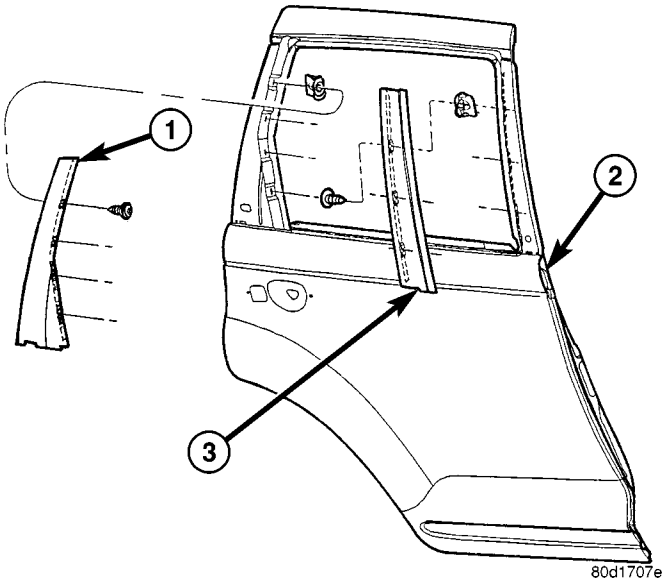

Fig. 1 REAR DOOR APPLIQUE

1 - REAR DOOR C=PILLAR APPLIQUE
2 - REAR DOOR
3 - REAR DOOR B-PILLAR

REAR DOOR APPLIQUE (Continued)

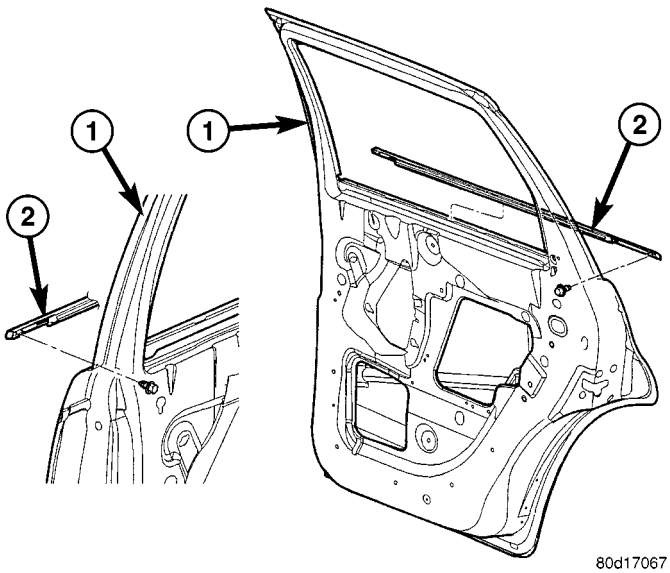

Fig. 2 REAR DOOR OUTSIDE WEATHERSTRIP

1 - REAR DOOR FRAME
2 - REAR DOOR GLASS RUN WEATHERSTRIP

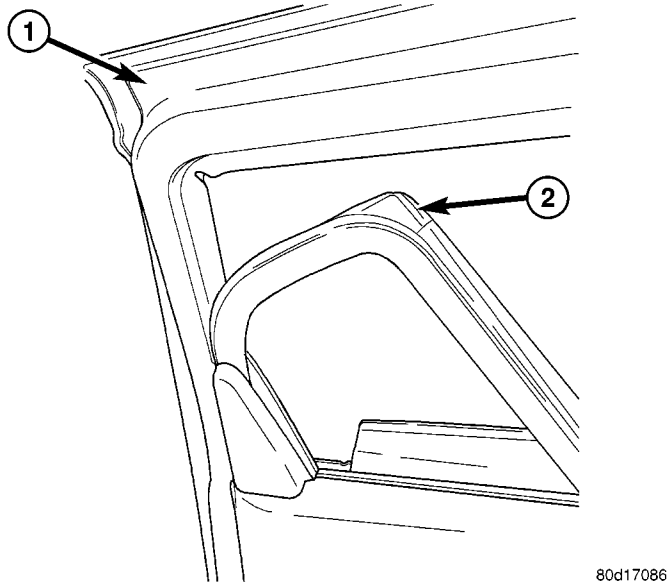

Fig. 4 DOOR RUN WEATHERSTRIP

1 - UPPER DOOR FRAME
2 - DOOR RUN WEATHERSTRIP

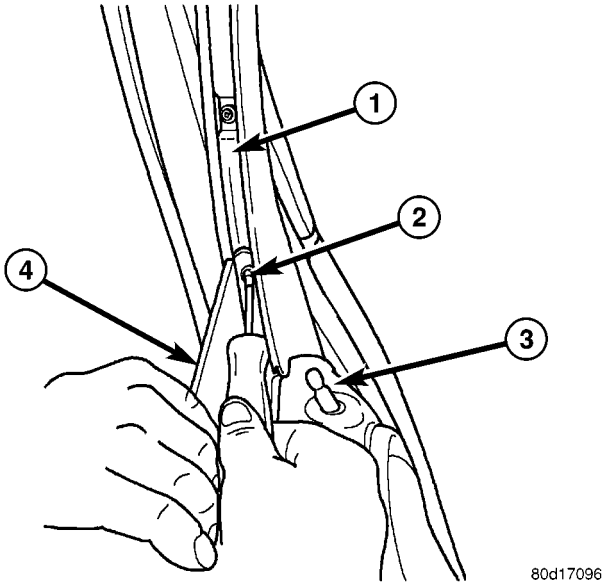

Fig. 3 REMOVE LOWER SCREW

1 - UPPER DOOR FRAME
2 - LOWER SCREW
3 - SHOP TOWEL
4 - DOOR WINDOW GLASS

INSTALLATION

(1) Position C-pillar applique on door.
(2) Install attaching screws to C-pillar.
(3) Install C-pillar applique glass run weatherstrip into position (Fig. 4).
(4) Position B-pillar applique on door.
(5) With shop towel between the tract and glass so that screw(s) do not fall in to the door opening.
(6) Install attaching screws to B-pillar applique.
(7) Install glass run weatherstrip into position on the door frame (Fig. 3).
(8) Place outside belt weatherstrip into position.
(9) Install front and rear screws attaching outside belt weatherstrip (Fig. 2).
(10) Raise door window glass.
(11) Close door.

REAR DOOR CHECK STRAP

REMOVAL

(1) Raise glass to full up position.
(2) Remove door trim panel.
(3) Remove bolts attaching check strap to hinge pillar (Fig. 5).
(4) Remove check strap seal from door end frame.
(5) Remove bolts attaching check strap to door end frame.
(6) Remove check strap from vehicle.

INSTALLATION

CAUTION: Do not close door before adjusting the door latch. Door may fail to open.

(1) Position door check strap on door.

REAR DOOR CHECK STRAP (Continued)

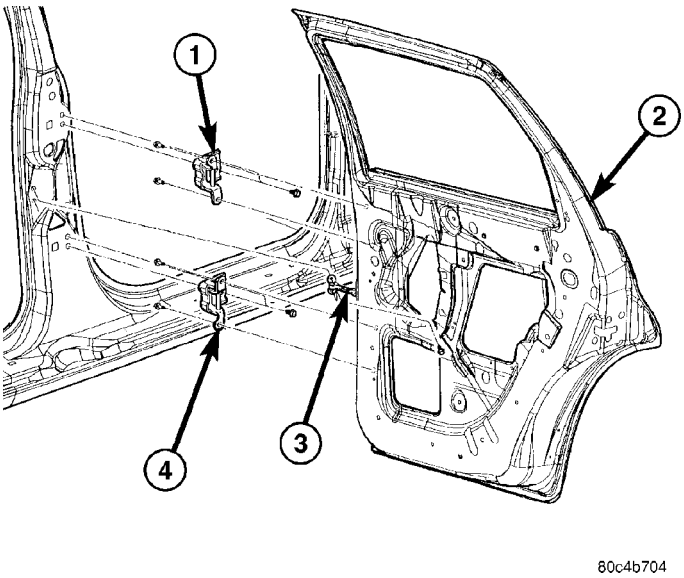

Fig. 5 REAR DOOR CHECK STRAP

1 - REAR DOOR UPPER HINGE
2 - REAR DOOR
3 - REAR DOOR CHECK STRAP
4 - REAR DOOR LOWER HINGE

(2) Install check strap attaching bolts to the door end frame (Fig. 5) .

(3) Install check strap seal. If seal is damaged or worn replace seal.

(4) Install check strap attaching bolts to the hinge pillar.

(5) Install water shield and door trim panel.

REAR DOOR

REMOVAL

(1) Open door and support on a suitable lifting device.

(2) Disconnect the wire connector at the hinge pillar.

(3) Remove bolts attaching door check strap to B-pillar.

(4) Mark door hinges for reinstallation.

(5) Remove bolts attaching lower hinge to door (Fig. 5) .

(6) Remove bolts attaching upper hinge to door.

INSTALLATION

(1) Install bolts to the upper hinge to door (Fig. 5) .

(2) Install bolts to the lower hinge to door.

(3) Connect the wire connector at the B-pillar.

(4) Remove lifting device.

(5) Install door check strap bolts.

(6) Adjust door as necessary.

REAR DOOR GLASS

REMOVAL

(1) Remove door trim panel and inner belt weatherstrip.

(2) Lower the window to 50 mm (2 ins.) from bottom of travel.

(3) Loosen bolts attaching rear lower run channel to inner door panel (Fig. 6).

(4) Remove rear run channels from door.

(5) Loosen screws attaching window regulator to glass.

(6) Remove glass.

(7) Lift door glass upward out of the opening at the top of door.

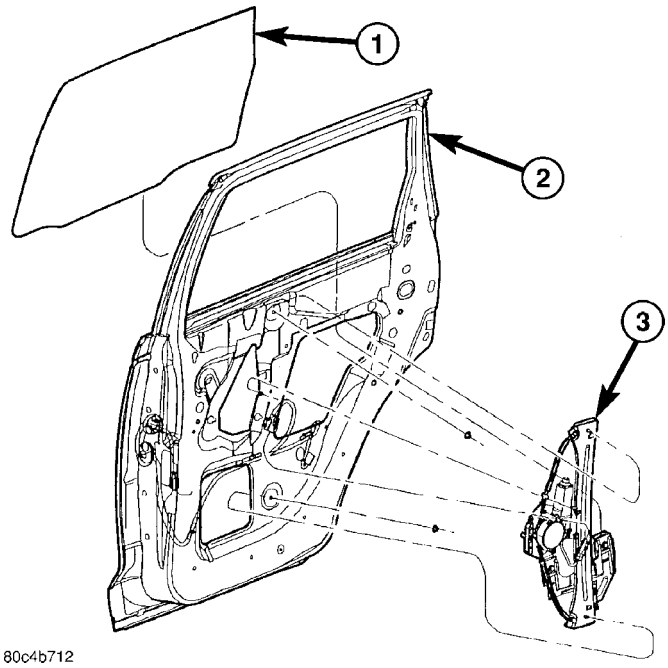

Fig. 6 REAR DOOR GLASS

1 - REAR DOOR WINDOW GLASS
2 - REAR DOOR
3 - REAR DOOR WINDOW POWER REGULATOR

INSTALLATION

(1) Lower door glass through opening in top of door and into position in the window regulator (Fig. 6) .

(2) Raise window glass and regulator to full up position.

(3) Tighten screws attaching window regulator to glass.

(4) Install lower belt brackets.

(5) Install inner door belt door trim panel and inner belt weatherstrip.

(6) Install outer belt weatherstrip.

(7) Operate window and check for interference. Adjust glass as necessary.

REAR DOOR OUTSIDE HANDLE

REMOVAL

(1) Remove door trim panel.
(2) Raise door glass.
(3) Disengage clips attaching linkage rods to door latch.
(4) Remove nuts attaching outside handle to door (Fig. 7).
(5) Remove outside handle.

INSTALLATION

(1) Connect lock and latch rods to door handle.
(2) Position door outside handle in opening (Fig. 7) .
(3) Tighten attaching nuts.
(4) Connect linkage rods to latch.
(5) Install door trim panel.

REAR DOOR HINGE

REMOVAL

NOTE: If both hinges on one door are to be replaced, remove and install one hinge completely prior to beginning the second hinge.

(1) With rear door closed apply tape to secure door into body.
(2) Open front door.
(3) Mark position of hinge on both the door end frame and lower B-pillar to ease installation.
(4) Remove B-pillar lower trim panel.
(5) Remove bolts attaching hinge to door end frame (Fig. 5) .
(6) Remove bolts attaching hinge to lower B-pillar.
(7) Remove door hinge from vehicle.

INSTALLATION

NOTE: If both hinges on one door are to be replaced, remove and install one hinge completely prior to beginning the second hinge.

NOTE: Do not grease door hinges.

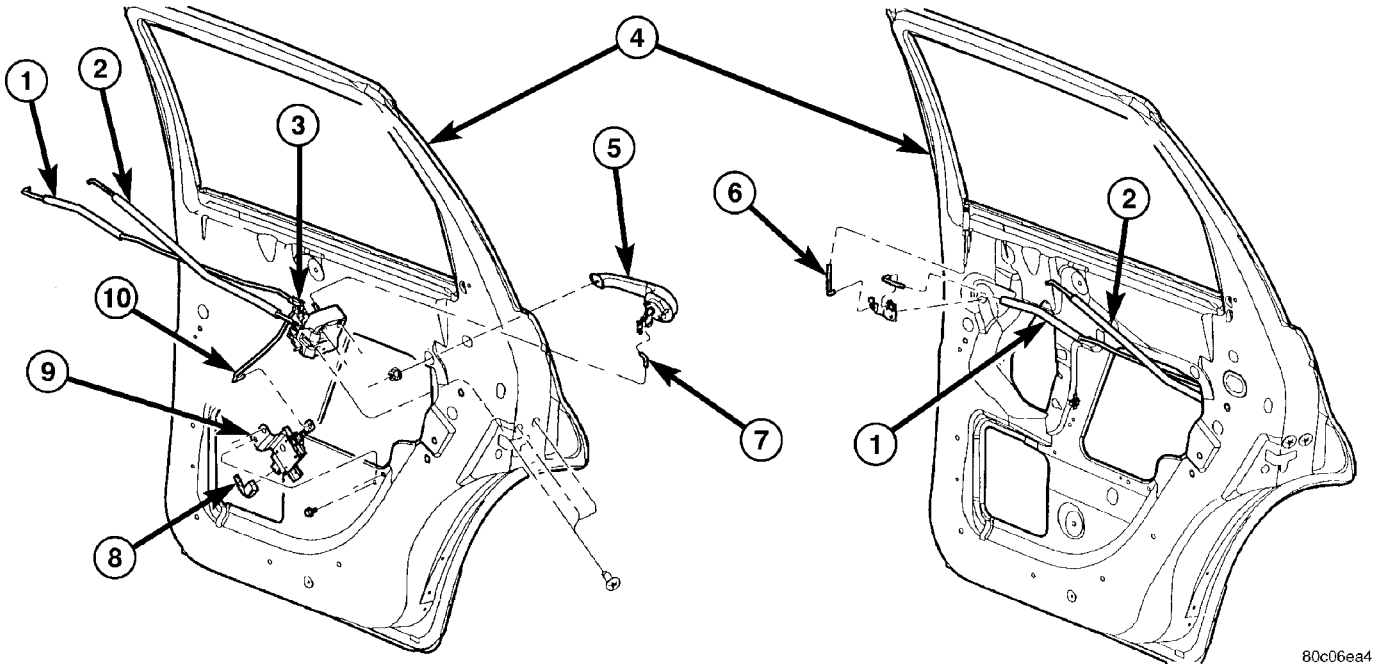

Fig. 7 REAR DOOR OUTSIDE HANDLE

1 - REAR DOOR BELLCRANK TO LATCH LINK AND SLEEVE
2 - REAR DOOR INSIDE ROD TO LATCH LINK AND SLEEVE
3 - REAR DOOR LOCK LATCH
4 - REAR DOOR
5 - REAR DOOR OUTSIDE HANDLE
6 - REAR DOOR LATCH LINKAGE KNOB AND ROD
7 - REAR DOOR OUTSIDE HANDLE LINK TO LATCH
8 - REAR DOOR WIRE POWER LOCK CONNECTOR
9 - REAR DOOR POWER LOCK MOTOR AND BRACKET
10 - REAR DOOR POWER LOCK ACTUATOR TO LATCH LINK

REAR DOOR HINGE (Continued)

(1) If necessary, paint new door hinge prior to installation.
(2) Position door hinge on vehicle (Fig. 5) .
(3) Loosely install bolts attaching hinge to lower B-pillar.
(4) Loosely install bolts attaching hinge to door end frame.
(5) Align hinge to marks made previously and tighten all bolts.
(6) Verify door fit and operation. Adjust door hinge for proper door alignment, if necessary.
(7) Install B-pillar lower trim panel.

REAR DOOR LATCH

REMOVAL

(1) Remove door trim panel.
(2) Raise door glass to full up position.
(3) Remove lower rear run channel.
(4) Disconnect clips attaching linkage rods to door latch.
(5) Remove linkage rods from latch (Fig. 8).
(6) Remove screws attaching latch to door end frame
(7) Remove door latch from vehicle.

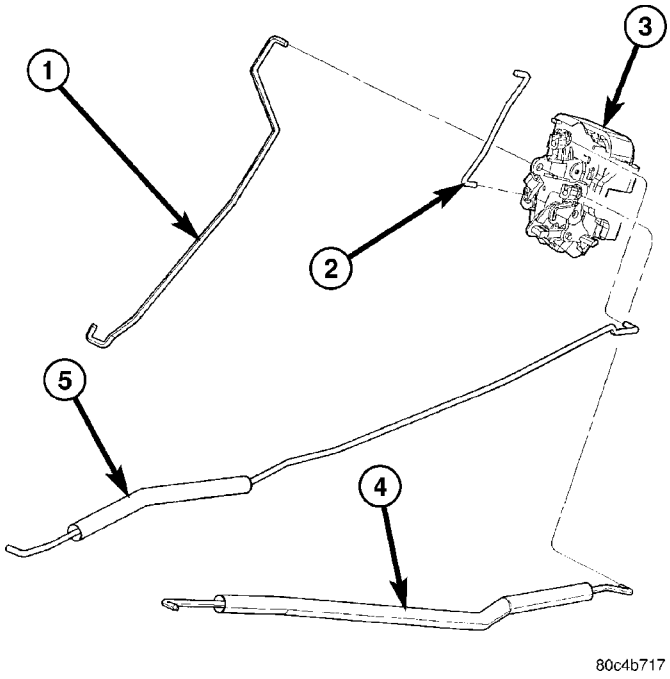

Fig. 8 REAR DOOR LATCH

1 - REAR DOOR POWER LOCK ACTUATOR TO LATCH LINK
2 - REAR DOOR OUTSIDE HANDLE TO LATCH LINK
3 - REAR DOOR LOCK LATCH
4 - REAR DOOR INSIDE ROD TO LATCH LINK AND SLEEVE
5 - REAR DOOR BELLCRANK TO LATCH LINK AND SLEEVE

INSTALLATION

CAUTION: Do not close door before adjusting the door latch. Door may fail to open.

(1) Position door latch on vehicle and install screws attaching latch to door end frame (Fig. 8) .
(2) Connect linkage rods to latch.
(3) Connect lock and latch rods to door latch.
(4) Install lower rear run channel.
(5) Install door trim panel.

ADJUSTMENTS

REAR DOOR LATCH ADJUSTMENT

(1) Insert a Torx® wrench through the elongated hole in the door end frame near the latch striker opening.
(2) Loosen screw on the side of the latch linkage.
(3) Push button on outside door handle and release it.
(4) Tighten screw on latch.
(5) Verify latch operation.

REAR DOOR LATCH STRIKER

REMOVAL

(1) Mark outline of door latch striker on B-pillar to aid installation (Fig. 9).
(2) Remove screws attaching door latch striker to B-pillar.
(3) Remove door latch striker from vehicle.

INSTALLATION

(1) Install door latch striker from vehicle (Fig. 9) .
(2) Install screws attaching door latch striker to B-pillar.
(3) Align marked outline of door latch striker on B-pillar to aid installation.

REAR DOOR TRIM PANEL

REMOVAL

(1) Release door latch and open door.
(2) Lower window glass.
(3) Remove screw from inside arm rest pull cup (Fig. 10).
(4) Remove screw from behind inside latch release handle.
(5) Remove fasteners from door trim panel.
(6) Disengage push in fasteners attaching trim to door panel around perimeter of trim panel.
(7) Disengage push-in metal spring clip attaching trim in sail flag area.

REAR DOOR TRIM PANEL (Continued)

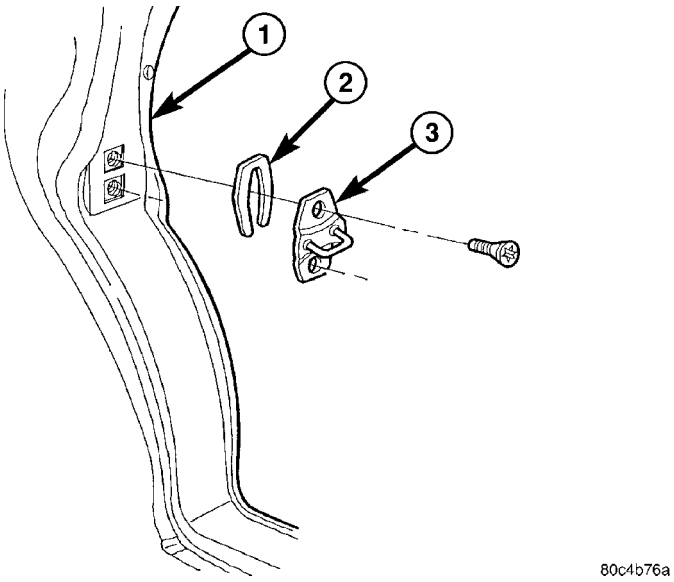

Fig. 9 REAR DOOR LATCH STRIKER

1 - C-PILLAR
2 - SPACER
3 - REAR DOOR STRIKER

(8) Lift trim panel up off belt weatherstrip.
(9) Tilt top of trim panel away from door and disengage clip attaching latch rod to handle.
(10) Remove latch rod from handle.
(11) Remove trim panel from door.

INSTALLATION

(1) Replace any damaged or missing push in fasteners from around perimeter of door trim panel.
(2) Place trim panel in position on door (Fig. 10) .
(3) Insert latch rod into handle and engage clip.
(4) Engage trim panel into retainer channel at top of door.
(5) Locate door trim panel to inner door panel by aligning locating pins on backside of trim panel to mating holes in inner door panel.
(6) Engage push in fasteners attaching trim to door panel around perimeter of trim panel.
(7) Install fasteners in door trim panel.
(8) Install screw behind inside latch release handle.
(9) Install screw inside arm rest pull cup.

REAR DOOR WATER DAM

REMOVAL

(1) Remove door trim panel.
(2) Remove door speaker, if equipped (Fig. 11).
(3) Remove door trim pull cup mount bracket.
(4) Disconnect clip attaching lock linkage to lock button bell-crank.
(5) Peel water dam away from adhesive around perimeter of inner door panel.

INSTALLATION

(1) Insure that enough adhesive remains to securely retain the water dam. Replace as necessary.
(2) Place the water dam into position and press securely to adhesive making sure to properly route wiring and linkages (Fig. 11) .

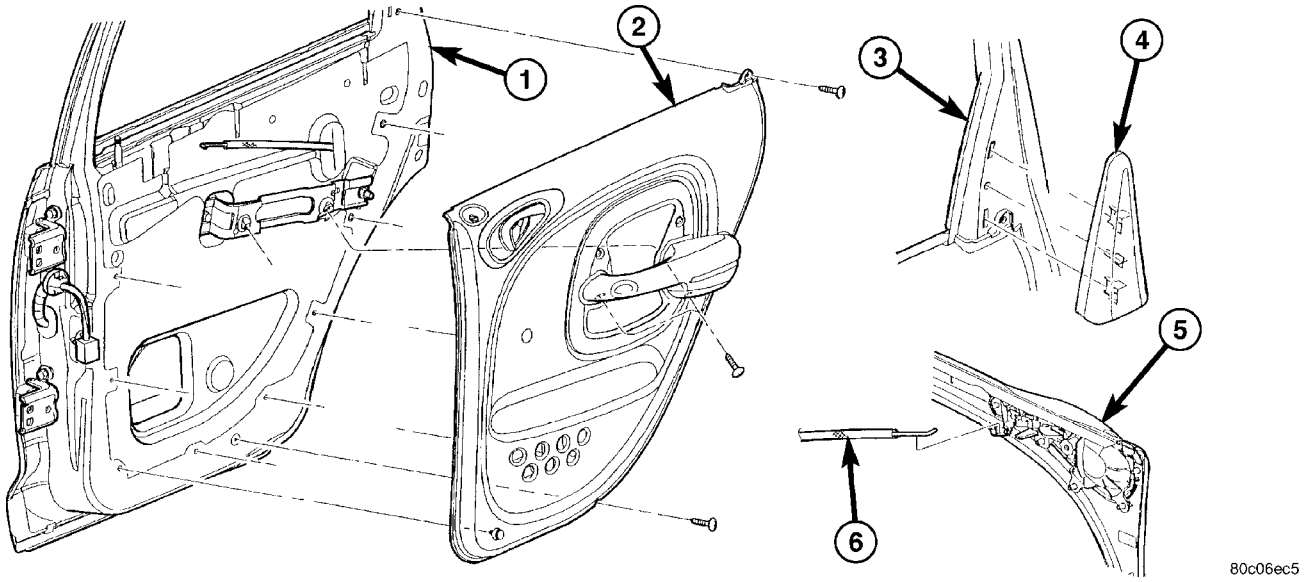

Fig. 10 REAR DOOR TRIM PANEL

1 - REAR DOOR
2 - REAR DOOR TRIM PANEL
3 - REAR DOOR REAR EDGE
4 - REAR DOOR FLAG TRIM
5 - REAR DOOR REMOTE HANDLE/BEZEL ASSEMBLY
6 - REAR DOOR LATCH LINK AND SLEEVE

REAR DOOR WATER DAM (Continued)

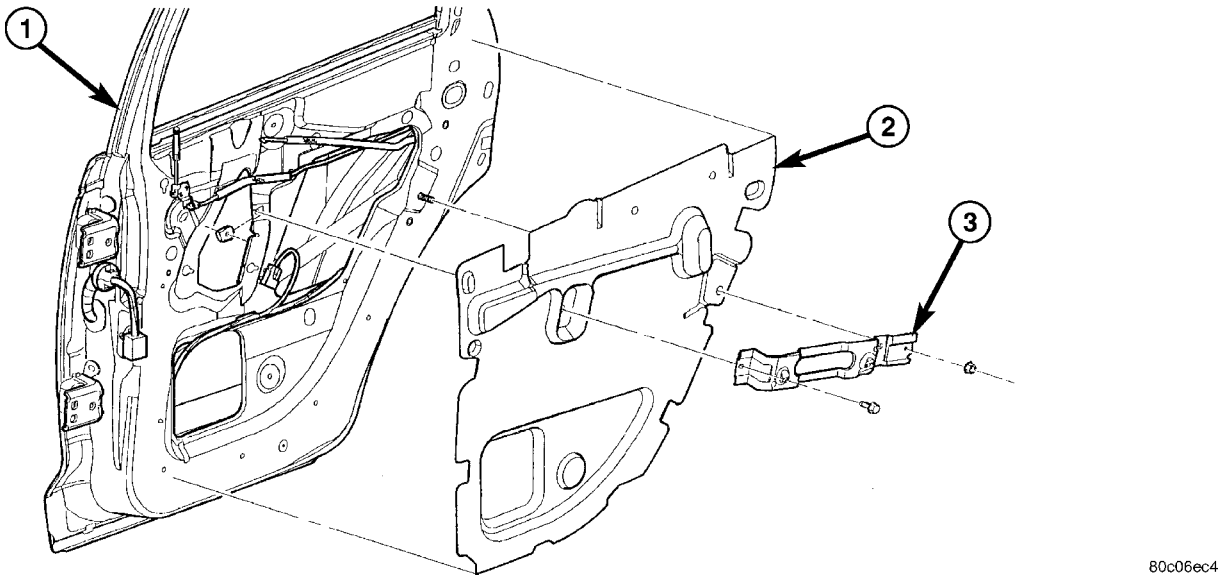

Fig. 11 WATER DAM

1 - REAR DOOR
2 - REAR DOOR WATER DAM
3 - REAR DOOR ARMREST TO INNER PANEL ATTACHING BRACKET

(3) Engage clip attaching lock linkage to lock button bell-crank.
(4) Install door trim pull cup mount bracket.
(5) Install door speaker, if equipped.
(6) Install door trim panel.

REAR DOOR WINDOW REGULATOR

REMOVAL

(1) Remove door trim panel and watershield.
(2) Remove door glass from regulator channel. Secure glass in the door frame in the “UP” position.
(3) Remove fasteners attaching window regulator channel and crank motor to door panel (Fig. 6) .
(4) Disengage wiring at clip.
(5) Disengage regulator from door panel, and motor housing.
(6) Slide regulator rearward and rotate forward end of channel through access hole in door panel.
(7) Remove window regulator from door through access hole in inner panel.

INSTALLATION

(1) Position window regulator and motor housing on door panel through access hole in door panel (Fig. 6) .
(2) Install fasteners attaching window regulator to door panel.
(3) Position glass to regulator roller channel.
(4) Tighten fasteners attaching door glass to lift plate.
(5) Engage electrical wiring.
(6) Position watershield, and install door trim panel.

EXTERIOR

TABLE OF CONTENTS

page

COWL GRILLE SCREEN
REMOVAL 35
INSTALLATION 35
EXTERIOR NAME PLATES
REMOVAL
REMOVAL - EXTERIOR BADGING 35
REMOVAL - BADGING/TAPE 36
INSTALLATION
INSTALLATION - EXTERIOR BADGING 36
INSTALLATION - BADGING/TAPE 36
FRONT WHEELHOUSE SPLASH SHIELDS
REMOVAL 36
INSTALLATION 36
FRONT FENDER
REMOVAL 37
INSTALLATION 37
FUEL FILL DOOR
REMOVAL 37
INSTALLATION 37
GRILLE
REMOVAL 38
INSTALLATION 38
FRONT SIDE RAIL ACCESS PULLEY SPLASH SHIELD
REMOVAL 38
INSTALLATION 38
LUGGAGE RACK CROSSBAR
REMOVAL 39
INSTALLATION 39
LUGGAGE RACK SIDE RAIL
REMOVAL 39
INSTALLATION 39
RADIATOR CLOSURE PANEL
REMOVAL 39
INSTALLATION 40
SIDE VIEW MIRROR
REMOVAL 40
INSTALLATION 40
SIDE VIEW MIRROR GLASS
REMOVAL 41
INSTALLATION 41
BODY SIDE MOLDINGS
REMOVAL 41
INSTALLATION 41
WOOD GRAIN/FLAME DECALS
REMOVAL 41
INSTALLATION 41

COWL GRILLE SCREEN

REMOVAL

(1) Remove wiper arms (Refer to 8 - ELECTRICAL/WIPERS/WASHERS/WIPER ARMS - REMOVAL).
(2) Open hood.
(3) Remove screws attaching right cowl grille screen (Fig. 1).
(4) Remove right cowl grille screen from vehicle.
(5) Remove screws attaching left cowl grille screen.
(6) Remove left cowl grille screen from vehicle.

INSTALLATION

(1) Open hood.
(2) Place left cowl grille screen into position (Fig. 1).
(3) Install attaching screws.
(4) Place right cowl grille screen into position.
(5) Install attaching screws
(6) Install wiper arms (Refer to 8 - ELECTRICAL/WIPERS/WASHERS/WIPER ARMS - INSTALLATION).
(7) Close hood.

EXTERIOR NAME PLATES

REMOVAL

REMOVAL - EXTERIOR BADGING

(1) Mark reference points before removing.
(2) Using a heat gun gently apply heat in a circular motion to loosen the adhesive bond.
(3) Using a nonmetallic prying device, such as a plastic or wood trim stick gently pry up at corners and remove.
(4) Clean off all traces of adhesive or double sided tape from the panel with a general purpose adhesive remover.

EXTERIOR NAME PLATES (Continued)

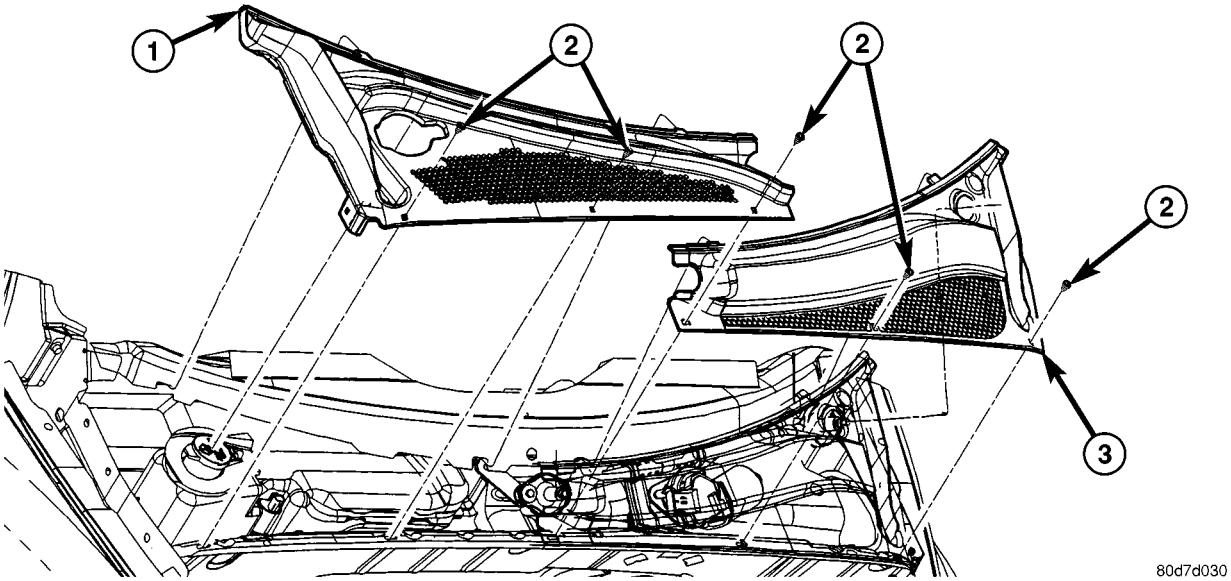

Fig. 1 COWL GRILLE SCREEN

1 - RIGHT COWL GRILLE SCREEN
2 - ATTACHING SCREWS
3 - LEFT COWL GRILLE SCREEN

REMOVAL - BADGING/TAPE

(1) Mark reference points before removing.
(2) Using a heat gun gently apply heat in a circular motion to loosen the adhesive bond.
(3) With your fingernail lift up and peel away badging/tape from panel, using a heat gun as you go.
(4) Clean off all traces of adhesive from the panel(s) with a general purpose adhesive remover.

INSTALLATION

INSTALLATION - EXTERIOR BADGING

(1) Clean panel surface with isopropyl alcohol.
(2) Align badging to reference points.
(3) Install and press securely to full adhesive contact
(4) Clean away any reference points.

INSTALLATION - BADGING/TAPE

(1) Clean panel surface with isopropyl alcohol.
(2) Remove paper carrier and align badging/tape to reference points or adjacent panel.
(3) Install and press securely, using a plastic spreader to eliminate all air bubbles.
(4) Remove top protective carrier.
(5) Clean away any reference points.

FRONT WHEELHOUSE SPLASH SHIELDS

REMOVAL

(1) Hoist and support vehicle on safety stands.
(2) Remove front wheel.
(3) Remove push-in fasteners attaching splash shield to frame rail forward of suspension (Fig. 2).
(4) Remove push in fasteners attaching splash shield to frame rail rearward of suspension.
(5) Remove screws attaching wheelhouse splash shield to front fender.
(6) Remove splash shield from vehicle.

INSTALLATION

(1) Place splash shield in position on vehicle (Fig. 2) .
(2) Install screws attaching wheelhouse splash shield to front fender.
(3) Install push in fasteners attaching splash shield to frame rail rearward of suspension.
(4) Install push in fasteners attaching splash shield to frame rail forward of suspension.
(5) Install front wheel.
(6) Lower vehicle.

FRONT WHEELHOUSE SPLASH SHIELDS (Continued)

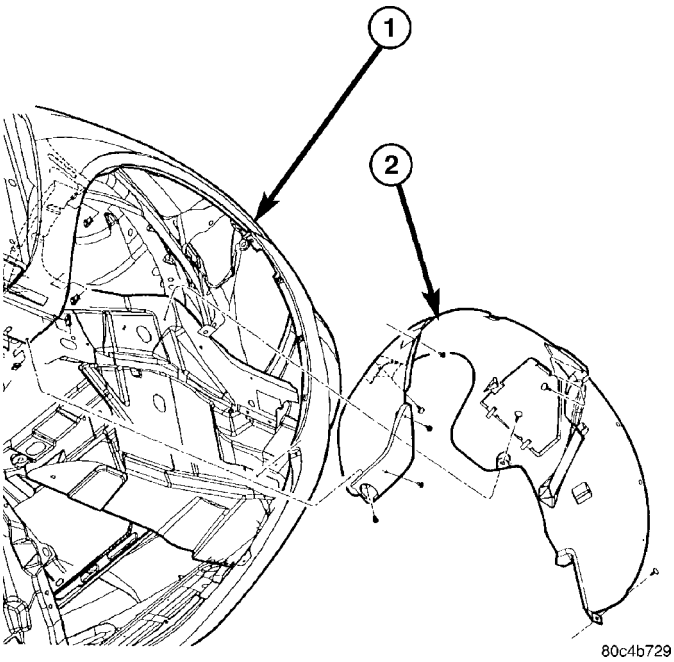

Fig. 2 FRONT WHEELHOUSE SPLASH SHIELD

1 - FRONT FENDER
2 - FRONT FENDER SPLASH SHIELD

FRONT FENDER

REMOVAL

(1) Remove headlamp housing.
(2) Right side of vehicle remove front side rail access pulley splash shield.
(3) Remove splash shield.
(4) Remove fender to fascia nuts.
(5) Remove fender bolt to lower rocker panel (Fig. 3).
(6) Remove fender bolt to lower cowl.
(7) Pull fascia away from fender.
(8) Remove bolts attaching fender to upper rail.
(9) Remove fender from vehicle.

INSTALLATION

(1) Place fender in position on vehicle (Fig. 3) .
(2) Start the center upper rail bolt.
(3) From inside engine compartment, install all the bolts attaching fender to upper rail and tighten.
(4) Install lower cowl panel bolt to fender.
(5) Install rocker panel bolt to fender.
(6) Place fascia into position.
(7) Install fender to fascia nuts.
(8) Install inner splash shield.
(9) Install right side pulley splash shield.
(10) Install headlamp assembly.
(11) Check fender for flush and gap.

FUEL FILL DOOR

REMOVAL

(1) Open the fuel filler door.
(2) Remove the screws attaching the door to the quarter panel (Fig. 4).
(3) Remove the door from the panel.

INSTALLATION

(1) Position the fuel filler door on the quarter panel with the screw holes aligned (Fig. 4) .

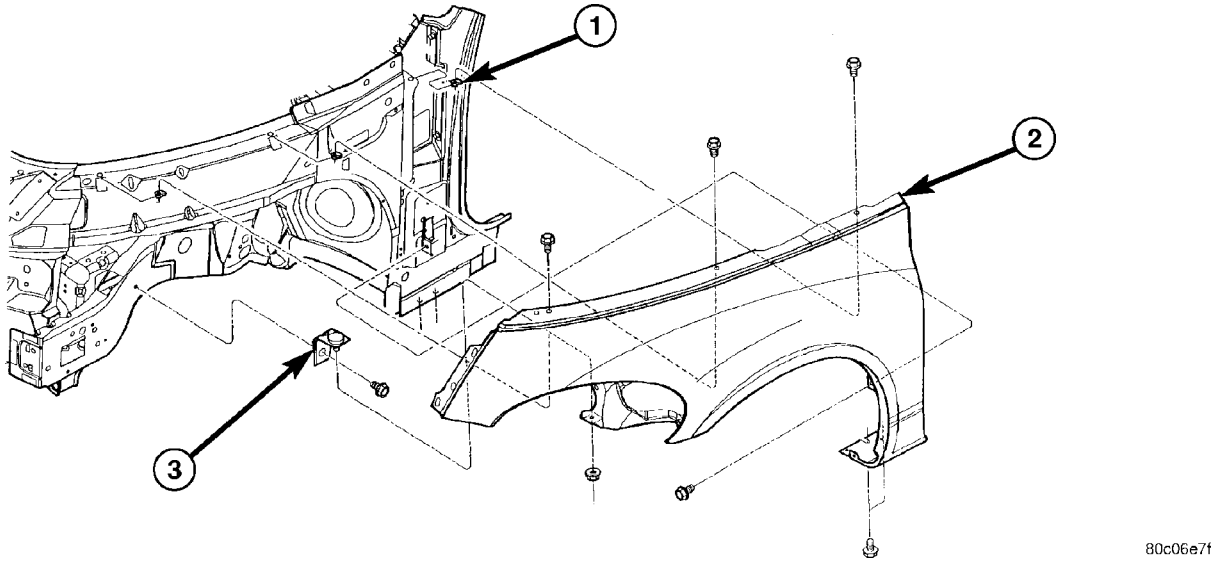

Fig. 3 FENDER

1 - U-NUTS
2 - FRONT FENDER
3 - FRONT FENDER SUPPORT

FUEL FILL DOOR (Continued)

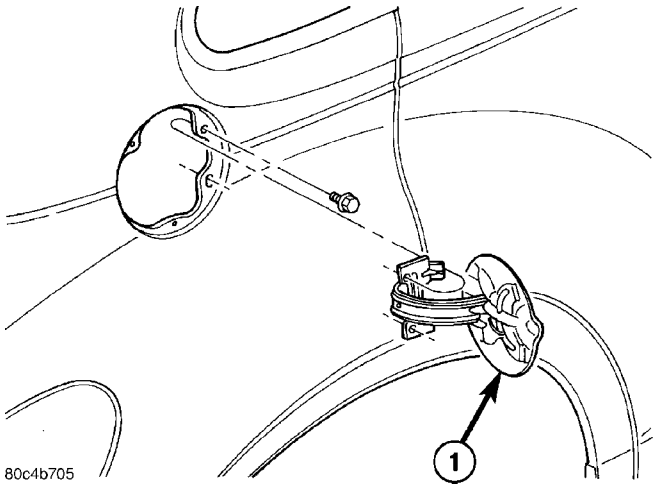

Fig. 4 FUEL FILLER DOOR

1 - FUEL FILLER DOOR

(2) Install the screws attaching the fuel filler door to the quarter panel.

GRILLE

REMOVAL

(1) Open hood and support hood on prop rod.

(2) Remove screws attaching grille to radiator closure panel (Fig. 5).

(3) Pull top of grille down and to disengage hooks from fender.

(4) Remove grille from vehicle.

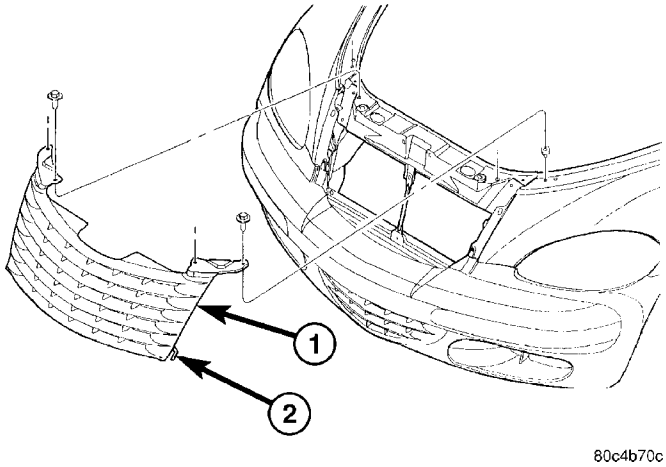

Fig. 5 GRILLE

1 - GRILLE
2 - RETAINER

INSTALLATION

(1) Place grille into position on vehicle, engage lower hook into fascia first, then engage middle hook to fender, then engage top hook. (Fig. 5) .

(2) Install screw attaching grille to radiator closure panel.

(3) Close hood.

FRONT SIDE RAIL ACCESS PULLEY SPLASH SHIELD

REMOVAL

(1) Hoist and support vehicle on safety stands.

(2) Remove front wheel.

(3) Remove fasteners attaching lower fascia and air dam. Pull fascia forward to access fastener attaching front edge of the splash shield.

(4) Remove push-in fasteners attaching side rail access pulley splash shield to frame rail forward of suspension (Fig. 6).

(5) Remove side rail access pulley splash shield from vehicle.

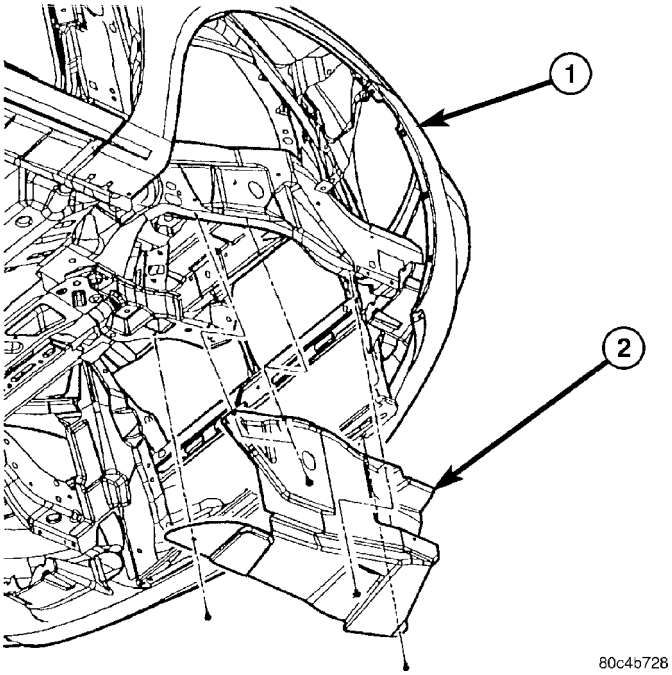

Fig. 6 FRONT SIDE RAIL ACCESS PULLEY SPLASH SHIELD

1 - FRONT FENDER
2 - FRONT SIDE RAIL ACCESS PULLEY SPLASH SHIELD

INSTALLATION

(1) Place side rail access pulley splash shield in position on vehicle (Fig. 6) .

(2) Install fasteners attaching side rail access pulley splash shield to frame rail.

(3) Install fasteners attaching fascia and air dam.

(4) Install front wheel.

(5) Lower vehicle.

LUGGAGE RACK CROSSBAR

REMOVAL

(1) Loosen the end cap set screws on both side rails and remove end caps. (Fig. 7)

(2) Release the cross bars and slide off the side rails.

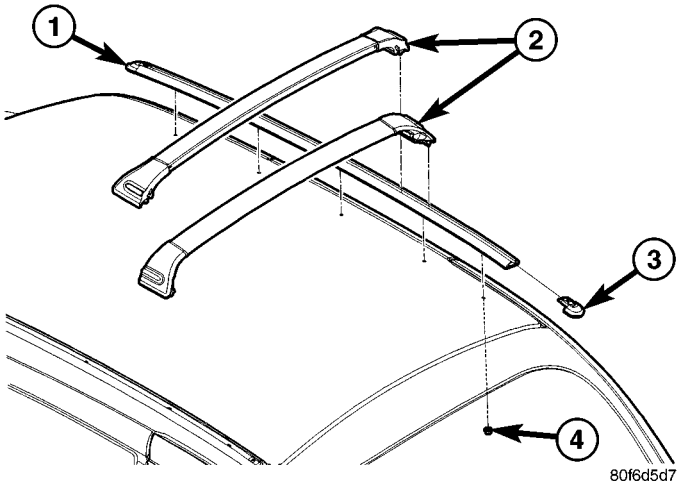

Fig. 7 LUGGAGE RACK

1 - SIDE RAILS
2 - CROSSBARS
3 - END CAPS
4 - NUTS (5 PER SIDE)

INSTALLATION

(1) Install the crossbars onto the side rails.

(2) Install the end caps and tighten the set screws.

(3) Place the cross bars into the far rear position and lock down.

LUGGAGE RACK SIDE RAIL

REMOVAL

(1) Remove the crossbars. (Refer to 23 - BODY/EXTERIOR/LUGGAGE RACK CROSSBAR - REMOVAL)

(2) Disconnect and isolate the battery negative cable.

NOTE: Remove the following trim panels from the same side as the side rail only.

(3) Remove the a-pillar trim. (Refer to 23 - BODY/INTERIOR/A-PILLAR TRIM - REMOVAL)

(4) Remove the sunvisor and holder. (Refer to 23 - BODY/INTERIOR/SUN VISOR - REMOVAL)

(5) Partially remove the sunroof trim lace. (Refer to 23 - BODY/SUNROOF/OPENING TRIM LACE - REMOVAL)

(6) Remove the upper b-pillar trim. (Refer to 23 - BODY/INTERIOR/B-PILLAR TRIM - REMOVAL)

(7) Remove the front and rear assist handles.

(8) Remove the upper c-pillar trim. (Refer to 23 - BODY/INTERIOR/C-PILLAR TRIM - REMOVAL)

(9) Remove the upper d-pillar trim. (Refer to 23 - BODY/INTERIOR/D-PILLAR TRIM - REMOVAL)

(10) Remove push pin fastener at the rear of the head liner.

(11) Lower headliner to gain access to the side rail nuts.

(12) Remove the five side rail nuts and remove the side rail.

INSTALLATION

(1) Install the side rail and side rail bolts.

(2) Apply a suitable body sealer to the bolt threads and install the nuts.

(3) Raise the headliner and install the push pin fastener at the rear.

(4) Install the upper d-pillar trim. (Refer to 23 - BODY/INTERIOR/D-PILLAR TRIM - INSTALLATION)

(5) Install the upper c-pillar trim. (Refer to 23 - BODY/INTERIOR/C-PILLAR TRIM - INSTALLATION)

(6) Install the assist handles.

(7) Install the upper b-pillar trim. (Refer to 23 - BODY/INTERIOR/B-PILLAR TRIM - INSTALLATION)

(8) Install the sunroof trim lace. (Refer to 23 - BODY/SUNROOF/OPENING TRIM LACE - INSTALLATION)

(9) Install the sunvisor. (Refer to 23 - BODY/INTERIOR/SUN VISOR - INSTALLATION)

(10) Install the a-pillar trim. (Refer to 23 - BODY/INTERIOR/A-PILLAR TRIM - INSTALLATION)

(11) Reconnect the battery.

(12) Install the crossbars. (Refer to 23 - BODY/EXTERIOR/LUGGAGE RACK CROSSBAR - INSTALLATION)

RADIATOR CLOSURE PANEL

REMOVAL

(1) Open hood.

(2) Mark bolt locations on the upper radiator closure panel (Fig. 8).

(3) Remove fasteners attaching radiator closure panel to fenders.

(4) Move temperature sensor as necessary.

(5) Remove bolt attaching lower radiator closure panel to the upper radiator closure panel.

(6) For replacement of upper radiator closure panel, remove hood latch, and any other hardware.

RADIATOR CLOSURE PANEL (Continued)

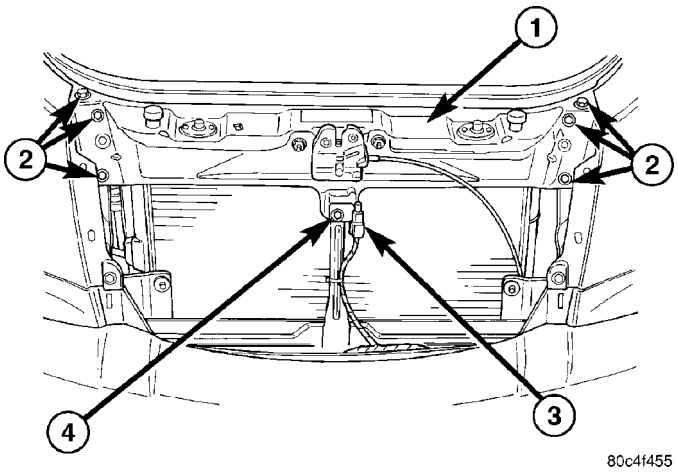

Fig. 8 RADIATOR CLOSURE PANEL

1 - UPPER RADIATOR CLOSURE PANEL
2 - UPPER CLOSURE ATTACHING FASTENERS
3 - TEMPERATURE SENSOR
4 - FASTENER ATTACHING LOWER CLOSURE PANEL TO UPPER CLOSURE PANEL

INSTALLATION

(1) Place in position the upper radiator closure panel (Fig. 8) .

(2) Install bolts attaching upper radiator closure panel to fenders. Check bolt alignment marks.

(3) Install bolt attaching the lower radiator closure panel to upper radiator closure panel.

(4) Place in position temperature sensor in position.

(5) Install hood latch and cable.

(6) Check hood latch operation.

SIDE VIEW MIRROR

REMOVAL

(1) Disengage the clips retaining the side mirror bezel to stanchion.(Left side only with manual mirror).

(2) Remove door trim panel if necessary.

(3) Remove nuts attaching mirror to door inner panel (Fig. 9)or (Fig. 10).

(4) Manual mirrors snap left side manual remote from bezel.

(5) Electrical mirrors disconnect wire connector.

(6) Remove mirror from vehicle.

INSTALLATION

(1) Connect electrical mirror wire connector.

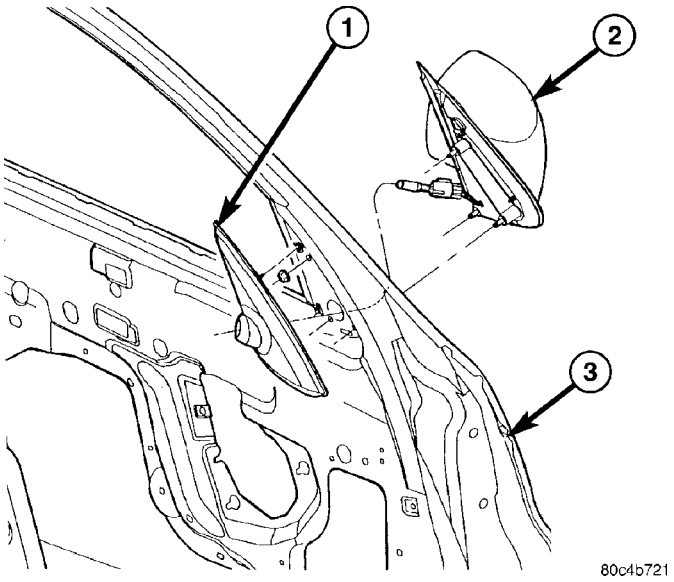

Fig. 9 MANUAL SIDE VIEW MIRROR

1 - INSIDE REMOTE CONTROL MIRROR BEZEL
2 - FRONT DOOR OUTSIDE REMOTE CONTROL MIRROR
3 - FRONT DOOR

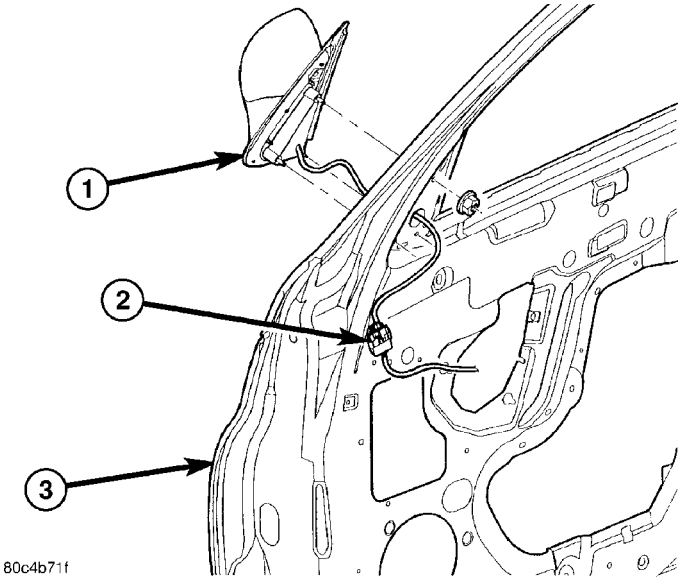

Fig. 10 POWER SIDE VIEW MIRROR

1 - MIRROR
2 - WIRING CONNECTOR
3 - FRONT DOOR

(2) Position side view mirror on vehicle (Fig. 9) or (Fig. 10).

(3) Install nuts attaching mirror.

(4) Install mirror bezel or door trim panel as necessary.

SIDE VIEW MIRROR GLASS

REMOVAL

WARNING: ALWAYS WEAR EYE AND HAND PROTECTION WHEN SERVICING THE MIRROR ASSEMBLY. FAILURE TO OBSERVE THESE WARNINGS MAY RESULT IN PERSONAL INJURY FROM BROKEN GLASS.

(1) Carefully pull/pry the broken glass holder from the mirror assembly.

(2) Disconnect the heated mirror electrical connectors from the terminals on the mirror glass holder, if equipped.

INSTALLATION

CAUTION: It is important to make sure the motor is square to the glass holder (attaching fingers) prior to glass holder attachment, otherwise the glass holder could be installed incorrectly causing poor retention and possible repeat failure.

(1) Position the new mirror glass holder to the mirror assembly.

NOTE: Position the mirror glass holder so that the moisture drain hole on the mirror glass holder assembly is facing downward.

(2) Align the mirror glass holder's attaching fingers to the mirror motor housing.

NOTE: Ensure that the protective rubber cover of the mirror motor housing is positioned correctly around the bottom of the fingers area.

(3) Using one hand, firmly press the mirror glass holder assembly into place while at the same time supporting the housing assembly from the backside with the other hand.

NOTE: Pressure must be applied equally over the center portion of the mirror to engage the mirror glass holder's attaching fingers to the corresponding fingers on the housing assembly. One or more clicks may be heard when finger engagement takes place.

(4) Verify retention of the mirror glass holder assembly by gently pulling outward on the mirror glass holder.

BODY SIDE MOLDINGS

REMOVAL

(1) Using a grease pencil or equivalent, mark the location of the molding for reference during installation.

(2) Warm the body side molding and body metal to approximately 38°C (100°F) using a suitable heat lamp or heat gun.

(3) Pull the molding from the vehicle.

(4) Clean off all traces of adhesive tape residue from the panel(s) with a general purpose adhesive remover.

INSTALLATION

(1) Clean panel surface with isopropyl alcohol and wipe surface dry with a lint free cloth.

(2) Remove the protective cover from the tape on the back of the molding and apply to the body according to the reference points marked previously.

(3) Firmly press the molding to the body surface to insure adhesion.

WOOD GRAIN/FLAME DECALS

REMOVAL

(1) Using a grease pencil or equivalent, mark the location of the decals to aid installation.

(2) Using a heat gun, gently apply heat in a circular motion to loosen the adhesive bond.

(3) Using your fingernail, plastic or wood trim stick, lift up and peel away the decal from the body panel applying heat as you go.

(4) Clean off all traces of adhesive from the panel(s) with a general purpose adhesive remover.

INSTALLATION

Surface Preparation

(1) Clean vehicle surfaces, removing any grease/oil marks using a 50 percent mixture of a isopropyl alcohol and water or 3M® High Performance Cloth.

(2) Dry surface using a lint free cloth.

Application

NOTE: Decal and vehicle temperatures should be between 13-32C (55-90F).

NOTE: Vehicle surface must be free of wax, grease, oil, etc.

WOOD GRAIN/FLAME DECALS (Continued)

NOTE: Use detergent that is free of any lanolin or lotions.

(1) Peel back liner from the decal by flicking a corner of the decal to separate the backing liner. Pull the liner away at a 180° angle – taking care not to let adhesive side of the decal touch clothing or fold back on itself.

NOTE: For woodgrain decals, do not allow the back of the liner to get wet before peeling back film. Pieces of wet liner paper will stick to the adhesive.

NOTE: Decals that have locating tabs: At times the paper liner will remain on these tabs when removing the liner from the decals. This liner piece can be left on the tabs, as it will not affect the locating ability of the tab and the tab will eventually be removed.

(2) Using a detergent water solution made of 2-3 drops of detergent per liter (quart) of water, spray decal application area and decal liberally.

(3) Apply the decal using the reference marks made previously.

(4) Using a squeegee, start at the center of the decal and squeegee out the wrinkles and liquid, fanning out to the edges so as not to trap liquid and air. Use one hand to squeegee and the other to keep the decal from sliding on initial squeegee stroke. If the decal has locating tabs, remove and discard the tabs after the decal has been secured sufficiently.

(5) Wipe the surface with a cloth to remove the any excess water. This may be helpful during the squeegee process to visually inspect for bubbles and wrinkles.

(6) Inspect the decal in good lighting conditions from all angles for bubbles. Use the squeegee to push bubbles to edges of the decal, forcing out air or water. If bubbles do not move, the adhesive has already been wetted out. A pin or equivalent tool may be used as an air release tool to pop the bubble and release the air and or wetting solution. Gently use a squeegee over the area to release the water after using the air release tool.

(7) **WOODGRAIN LIFTGATE DECAL ONLY:** apply moderate heat to film overlapping the recess area of the opening for the lift-gate handle. Use a cloth wrapped squeegee or fingers to mold the film into the recess and seal the film. It is important to remove trapped air and/or water around this area before applying heat, as the heat will seal off the handle opening and preclude air and water from escaping in that direction.

HOOD

TABLE OF CONTENTS

page

HOOD HINGE
REMOVAL 43
INSTALLATION 43
HOOD
REMOVAL 43
INSTALLATION 43
HOOD LATCH
REMOVAL 44
INSTALLATION 44
HOOD LATCH RELEASE CABLE
REMOVAL 44
INSTALLATION 45
HOOD LATCH STRIKER
REMOVAL 45
INSTALLATION 45
SILENCER PAD
REMOVAL 45
INSTALLATION 45

HOOD HINGE

REMOVAL

(1) Support hood on the side that requires hinge replacement.

(2) Mark all bolt and hinge attachment locations with a grease pencil or other suitable device to provide reference marks for installation.

(3) Remove bolts holding hood to hinge (Fig. 1).

(4) Remove bolts holding hood hinge to load beam flange and remove hinge from vehicle. If necessary, paint new hinge before installation.

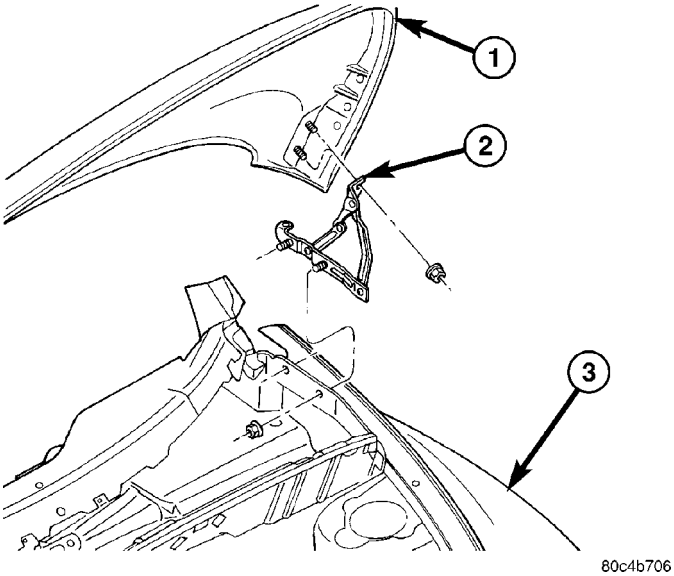

Fig. 1 HOOD HINGE

1 - HOOD
2 - HOOD HINGE
3 - FRONT FENDER

INSTALLATION

(1) If necessary, paint new hinge before installation.

(2) Place hinge in position on vehicle (Fig. 1) .

(3) Install bolts to hold hood hinge to front fender flange.

(4) Install bolts to hold hood to hinge.

(5) Align all marks and secure bolts. The hood should be aligned to 4 mm (0.160 in.) gap to the front fenders and flush across the top surfaces along fenders. Shims can be added or removed under hood hinge to achieve proper hood height.

(6) Remove support from under hood and verify hood operation.

HOOD

REMOVAL

(1) Raise hood to full up position (Fig. 2).

(2) Mark all bolt and hinge attachment locations with a grease pencil or other suitable device to provide reference marks for installation.

(3) Remove the top bolts attaching hood to hinge and loosen the bottom bolts until they can be removed by hand.

(4) With assistance from a helper at the opposite side of the vehicle to support the hood, remove bottom bolts attaching hood to hinge.

(5) Remove the hood from the vehicle.

INSTALLATION

(1) Place hood in position on vehicle. With assistance from a helper at the opposite side of the vehicle to support the hood, install bottom bolts to hold hood to hinge finger tight (Fig. 2) .

(2) Install top bolts attaching hood to hinge finger tight.

HOOD (Continued)

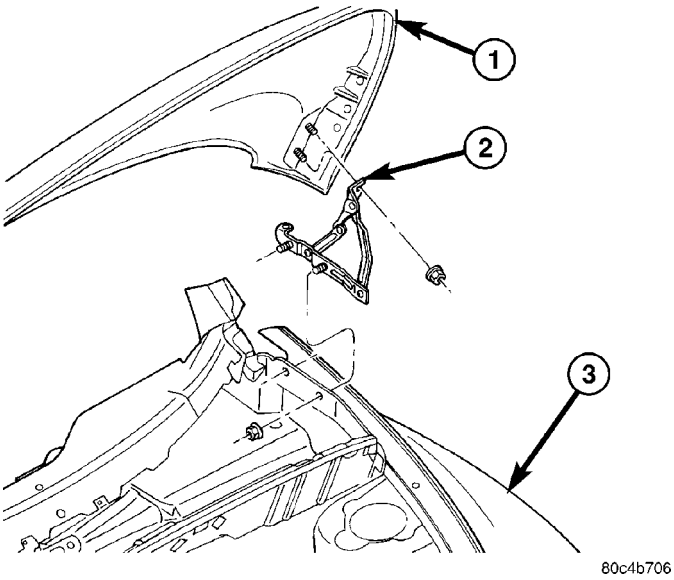

Fig. 2 HOOD

1 - HOOD
2 - HOOD HINGE
3 - FRONT FENDER

(3) When installing hood, align all marks and secure bolts. The hood should be aligned to 4 mm (0.160 in.) gap to the front fenders and flush across the top surfaces along fenders.

(4) Verify hood operation and alignment.

HOOD LATCH

REMOVAL

(1) Release hood latch and open hood.

(2) Support hood on prop rod.

(3) Remove grille.

(4) Remove screws attaching hood latch to radiator closure panel (Fig. 3).

(5) Remove hood latch from closure panel.

(6) Disengage remote release cable from latch (Fig. 4).

INSTALLATION

(1) Engage remote release cable into latch (Fig. 4).

(2) Place hood latch onto radiator closure panel (Fig. 3).

(3) Install bolts attaching latch to closure panel.

(4) Install grille.

(5) Close hood and verify alignment of hood and that latch is securely engaged.

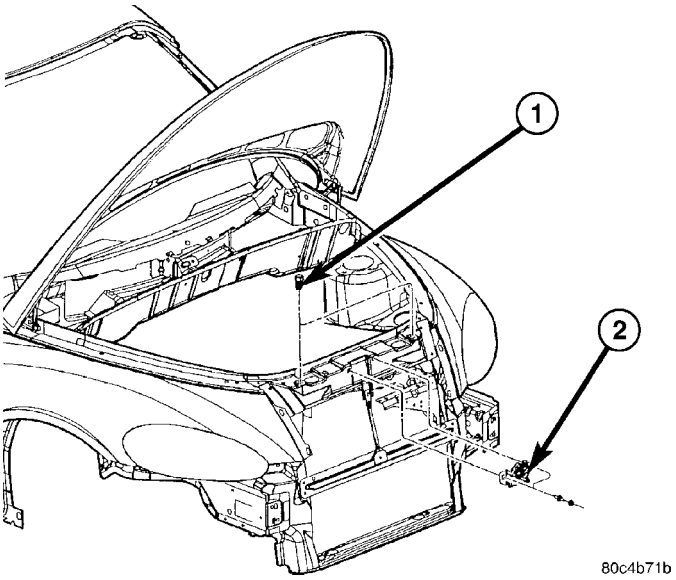

Fig. 3 HOOD LATCH

1 - HOOD ADJUSTER BUMPER
2 - HOOD LATCH

HOOD LATCH RELEASE CABLE

REMOVAL

(1) Remove hood latch.

(2) Disconnect remote hood release cable from hood latch (Fig. 4).

(3) Remove left front cowl trim panel.

(4) Remove screws attaching hood release handle to cowl panel.

HOOD LATCH RELEASE CABLE (Continued)

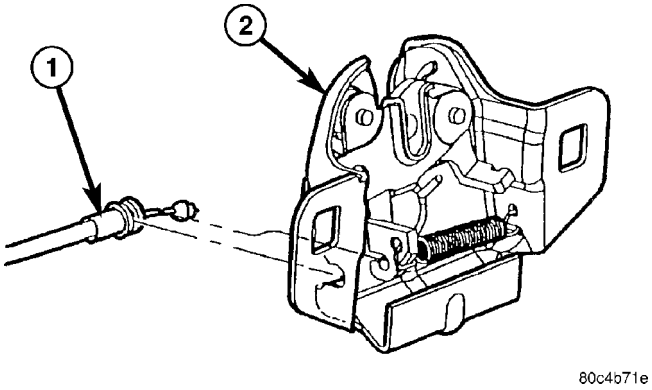

Fig. 4 HOOD LATCH RELEASE CABLE

1 - HOOD LATCH RELEASE CABLE
2 - HOOD LATCH

(5) Disconnect rubber grommet from dash panel behind instrument panel.
(6) Pull release cable through hole in dash panel.
(7) Remove cable and handle from vehicle.

INSTALLATION

(1) Assemble cable and handle onto vehicle.
(2) Push release cable through hole in dash panel.
(3) Connect rubber grommet into dash panel.
(4) Install screws attaching hood release handle to cowl panel.
(5) Install left front cowl trim panel.
(6) Connect remote hood release cable to hood latch (Fig. 4).
(7) Install hood latch.
(8) Close hood and verify operation.

HOOD LATCH STRIKER

REMOVAL

(1) Release hood latch and open hood.
(2) Remove bolts attaching striker to inside of hood (Fig. 5).
(3) Remove hood latch striker from vehicle.

INSTALLATION

(1) Position hood latch striker on vehicle (Fig. 5) .
(2) Install bolts attaching hood latch striker to hood.
(3) Align hood latch striker to engage smoothly into hood latch.
(4) Verify hood operation and alignment. Adjust as necessary.
(5) Tighten attaching bolts to 13.5 N·m (10 ft. lbs.) torque.

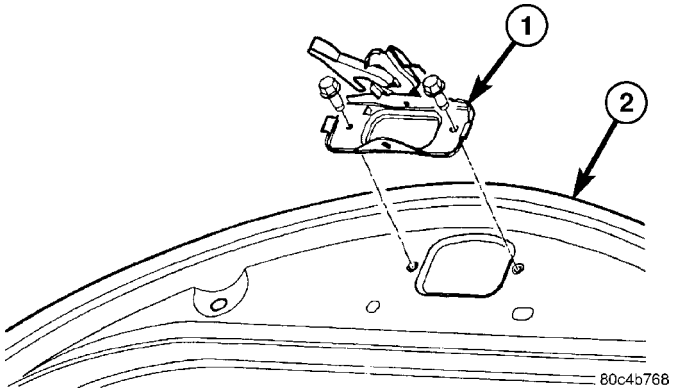

Fig. 5 HOOD STRIKER

1 - HOOD STRIKER
2 - HOOD

SILENCER PAD

REMOVAL

(1) Open hood.
(2) Remove fasteners attaching hood silencer to hood (Fig. 6).
(3) Remove hood silencer from vehicle.

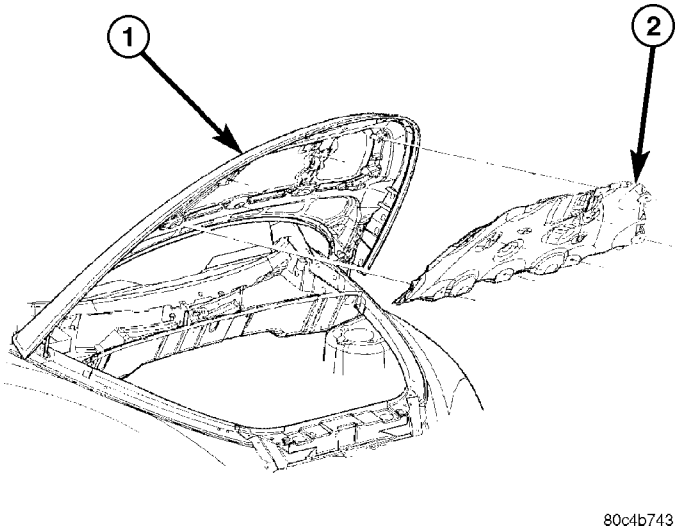

Fig. 6 HOOD SILENCER

1 - HOOD
2 - HOOD INNER PANEL SILENCER

INSTALLATION

(1) Place hood silencer in position on hood (Fig. 6) .
(2) Install fastener attaching hood silencer to hood.
(3) Close hood.

INSTRUMENT PANEL

TABLE OF CONTENTS

	page
ACCESSORY SWITCH BEZEL	
REMOVAL	46
INSTALLATION	46
CLUSTER BEZEL	
REMOVAL	46
INSTALLATION	48
GLOVE BOX	
REMOVAL	48
INSTALLATION	48
GLOVE BOX LATCH	
REMOVAL	49
INSTALLATION	49
GLOVE BOX LOCK CYLINDER	
REMOVAL	49
INSTALLATION	50
INSTRUMENT PANEL ASSEMBLY	
REMOVAL	50
INSTALLATION	53
INSTRUMENT PANEL CENTER BEZEL	
REMOVAL	56
INSTALLATION	56
INSTRUMENT PANEL CENTER BEZEL CONTROL KNOBS	
REMOVAL	56
INSTALLATION	57
INSTRUMENT PANEL END CAP	
REMOVAL	57
INSTALLATION	57
INSTRUMENT PANEL TOP COVER	
REMOVAL	57
INSTALLATION	58
STEERING COLUMN OPENING COVER	
REMOVAL	59
INSTALLATION	59

ACCESSORY SWITCH BEZEL

REMOVAL

NOTE: The accessory switches are serviced separately, but the cigar lighter/power outlet is not (Fig. 1).

(1) Open hood.

(2) Disconnect and isolate the battery negative cable (Fig. 2).

(3) Remove the instrument panel center bezel. Refer to Removal and Installation, Instrument Panel Center Bezel in this section.

(4) Remove two screws retaining the accessory switch bezel (Fig. 3).

(5) Disconnect the harness connectors to the following (Fig. 4):

- Rear Window Defogger Switch (if equipped)
- Traction Control Switch (if equipped)
- Cigar Lighter/Power Outlet
- Rear Windshield Washer/Wiper Switch

(6) To remove switches from bezel, use both thumbs and slightly pull out on the two walls that are holding the switches (Fig. 5).

INSTALLATION

NOTE: The accessory switches are serviced separately, but the cigar lighter/power outlet is not.

If replacing the accessory switch bezel, you must transfer the switches to the new bezel.

(1) Reconnect accessory switch bezel connectors (Fig. 4).

(2) Reinstall switch bezel into instrument panel opening and install two retaining screws (Fig. 3).

(3) Reinstall instrument panel center bezel. Refer to Removal and Installation, Instrument Panel Center Bezel in this section.

(4) Reconnect the battery negative cable (Fig. 2).

(5) Close the hood.

(6) Verify vehicle and system operation.

CLUSTER BEZEL

REMOVAL

(1) Open hood.

(2) Disconnect and isolate the battery negative cable (Fig. 2).

(3) Remove the instrument panel top cover. (Refer to 23 - BODY/INSTRUMENT PANEL/INSTRUMENT PANEL TOP COVER - REMOVAL)

(4) Remove the steering column cover. (Refer to 23 - BODY/INSTRUMENT PANEL/STEERING COLUMN OPENING COVER - REMOVAL)

(5) Remove the left instrument panel end cap. (Refer to 23 - BODY/INSTRUMENT PANEL/INSTRUMENT PANEL END CAP - REMOVAL)

CLUSTER BEZEL (Continued)

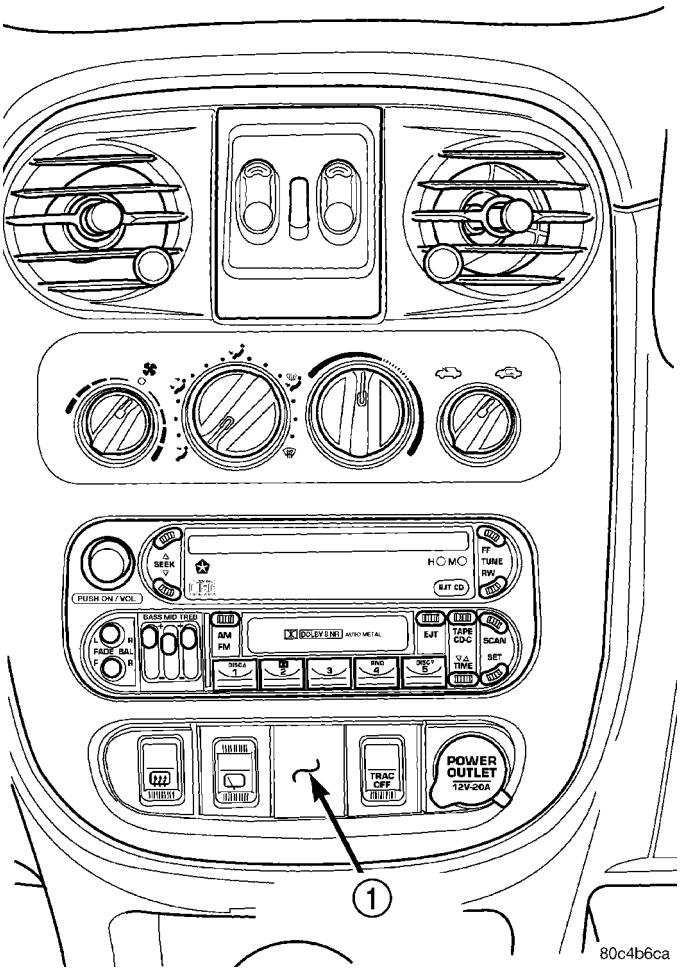

Fig. 1 ACCESSORY SWITCH BEZEL LOCATION

1 - ACCESSORY SWITCH BEZEL

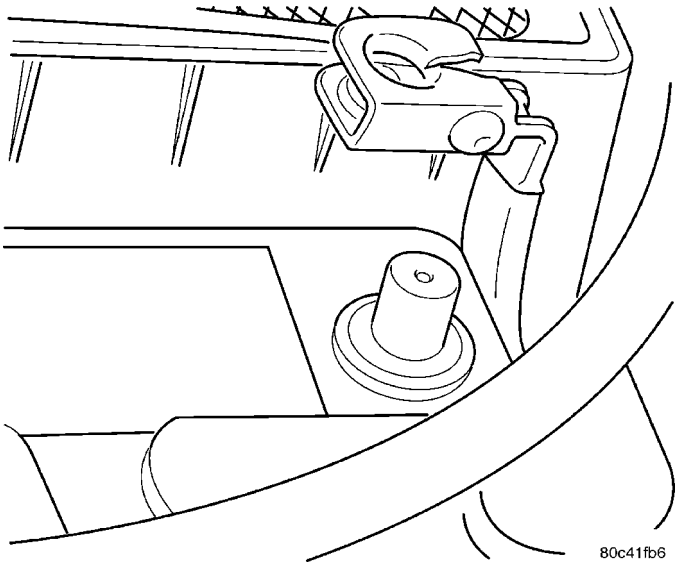

Fig. 2 DISCONNECT AND ISOLATE BATTERY NEGATIVE CABLE

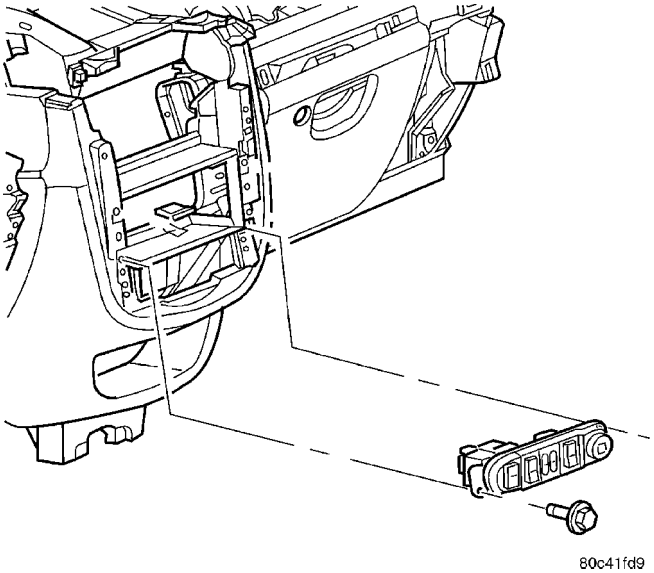

Fig. 3 ACCESSORY SWITCH BEZEL

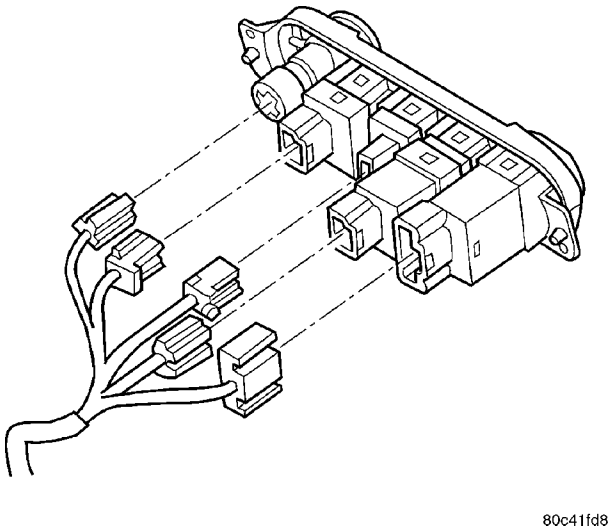

Fig. 4 ACCESSORY SWITCH BEZEL CONNECTORS

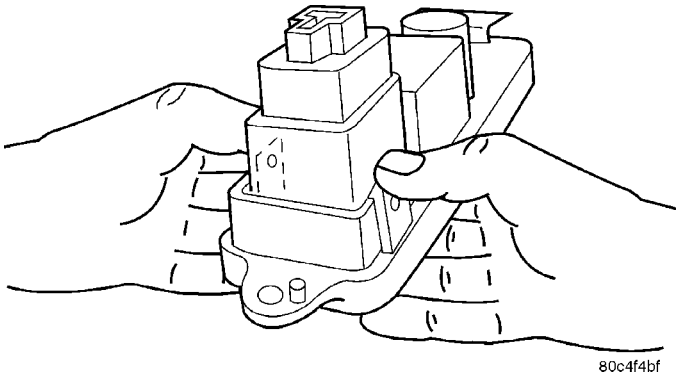

Fig. 5 ACCESSORY SWITCH BEZEL SWITCH

CLUSTER BEZEL (Continued)

(6) Grab the sides of the instrument cluster bezel and gently give a quick pull to unsnap the cluster bezel (Fig. 6).

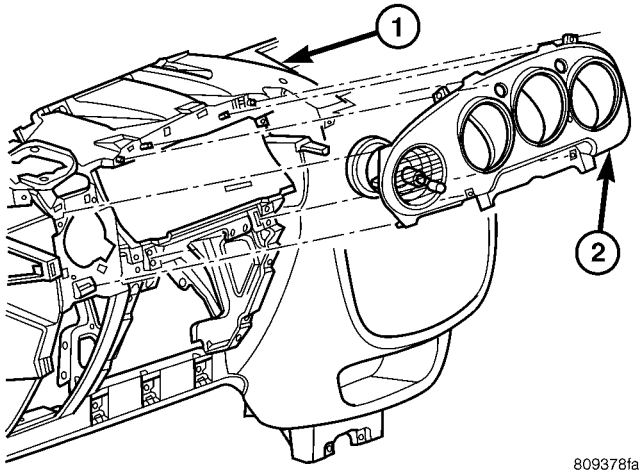

Fig. 6 INSTRUMENT CLUSTER BEZEL

1 - INSTRUMENT PANEL
2 - CLUSTER BEZEL

(7) Disconnect the turn signal lamps from the instrument cluster bezel (Fig. 7).

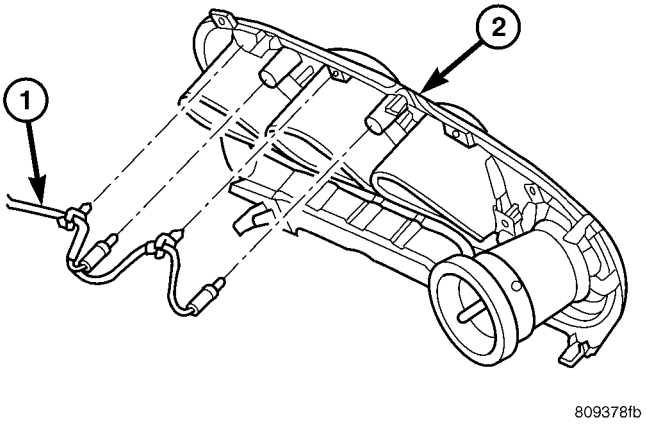

Fig. 7 TURN SIGNAL INDICATOR LAMPS

1 -CLUSTER BEZEL
2 - TURN SIGNAL LAMPS AND WIRE HARNESS

(8) Remove bezel from vehicle.

If replacing the instrument cluster bezel, the A/C outlet housing assembly must be transferred to the new bezel. Refer to Removal and Installation, A/C Outlet Housing Assembly in this section.

INSTALLATION

(1) Insert turn signal lamps into the instrument cluster bezel (Fig. 7).

(2) Position instrument cluster bezel in position making sure all fasteners are lined up with their respective slots.

(3) Gently, but forcefully, snap the instrument cluster bezel into place (Fig. 6).

(4) Install the left instrument panel end cap. (Refer to 23 - BODY/INSTRUMENT PANEL/INSTRUMENT PANEL END CAP - INSTALLATION)

(5) Install the steering column cover. (Refer to 23 - BODY/INSTRUMENT PANEL/STEERING COLUMN OPENING COVER - INSTALLATION)

(6) Install the instrument panel top cover. (Refer to 23 - BODY/INSTRUMENT PANEL/INSTRUMENT PANEL TOP COVER - INSTALLATION)

(7) Connect the battery negative cable (Fig. 2).

(8) Close the hood.

(9) Verify vehicle and system operation.

GLOVE BOX

REMOVAL

(1) Open front passenger door.

(2) Open glove box door, push in on box/bin sides to release the glove box (Fig. 8).

(3) Allow the glove box to drop down. With a firm quick motion, twist the glove box assembly off the hinge pins.

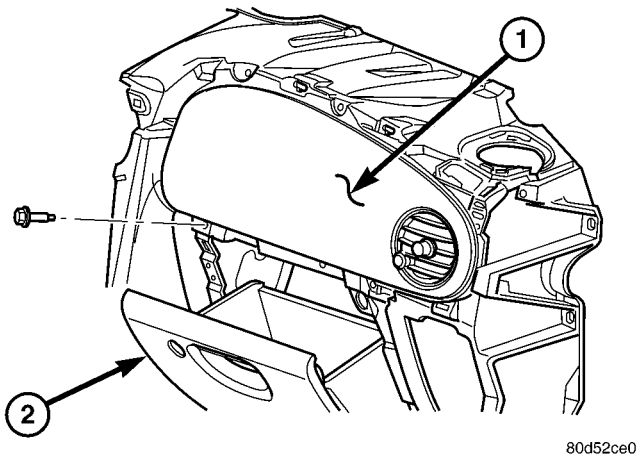

Fig. 8 GLOVE BOX

1 - INSTRUMENT PANEL PASSENGER AIRBAG COVER
2 - GLOVE BOX

INSTALLATION

(1) Place glove box assembly in position and make sure the orientation of the hinge is correct and rotate glove box assembly hinge into place (Fig. 9).

(2) Lift glove box assembly up, push in on the box/bin sides to allow the glove box to pass by the instrument panel (Fig. 8).

(3) Close glove box.

GLOVE BOX (Continued)

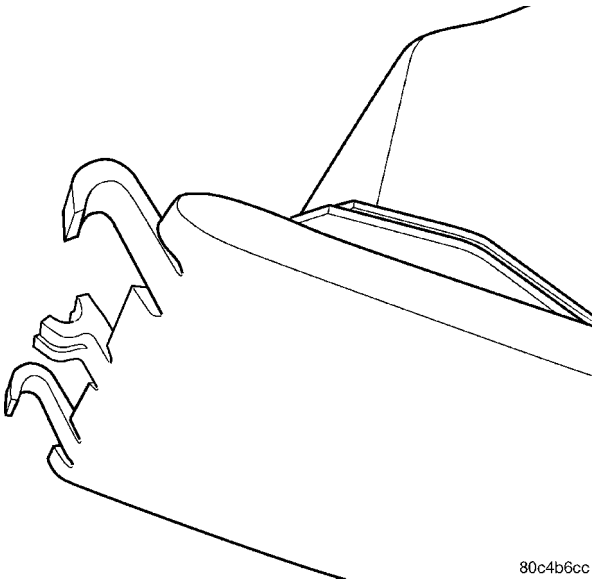

Fig. 9 GLOVE BOX ASSEMBLY HINGE

(4) Shut passenger door.

GLOVE BOX LATCH

REMOVAL

(1) Open front passenger door.

(2) Remove glove box assembly. Refer to Removal and Installation, Glove Box Assembly in this section.

(3) With glove box assembly on bench, remove eleven glove box assembly screws (Fig. 10).

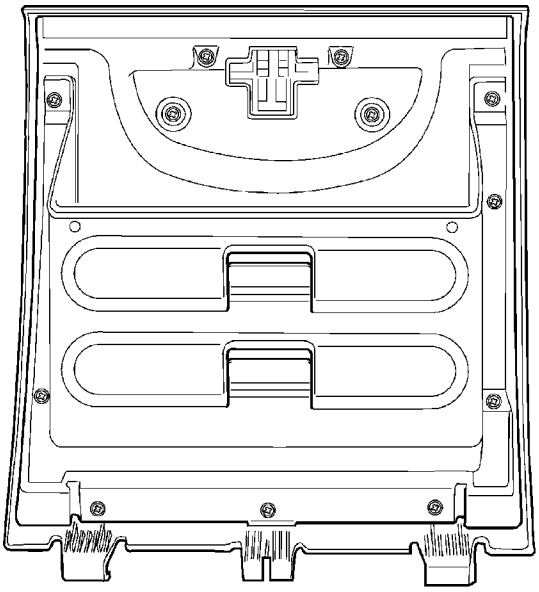

Fig. 10 GLOVE BOX ASSEMBLY SCREWS

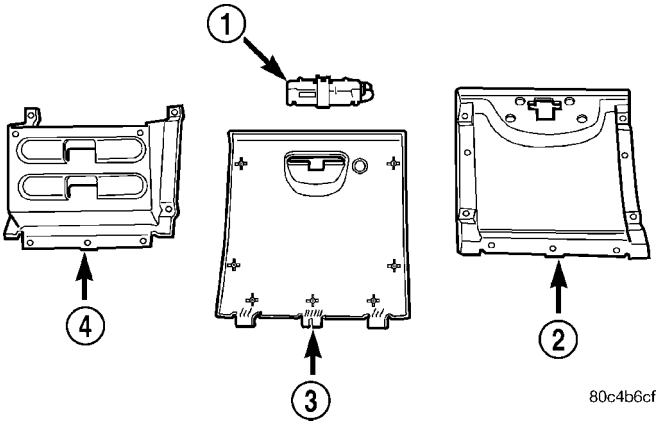

Fig. 11 GLOVE BOX ASSEMBLY BREAKDOWN

1 - LATCH
2 - INNER DOOR
3 - OUTER DOOR
4 - BOX

INSTALLATION

(1) Reassemble glove box assembly (Fig. 10) and (Fig. 11).

(2) Install glove box assembly. Refer to Removal and Installation, Glove Box Assembly in this section.

(3) Close passenger door.

GLOVE BOX LOCK CYLINDER

REMOVAL

(1) Open passenger door.

(2) Remove and disassemble glove box assembly. Refer to Removal and Installation, Glove Box Door/Bin/Latch in this section.

(3) Insert key into glove box lock cylinder. Using a small pocket screwdriver or equivalent, push in on retaining tab as you turn the lock cylinder 90° and pull out lock cylinder (Fig. 12) and (Fig. 13).

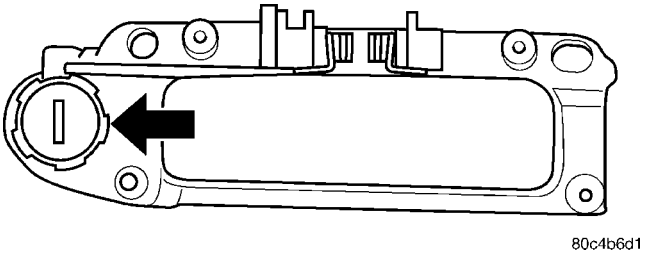

Fig. 12 GLOVE BOX LOCK CYLINDER RELEASE TAB LOCATION

GLOVE BOX LOCK CYLINDER (Continued)

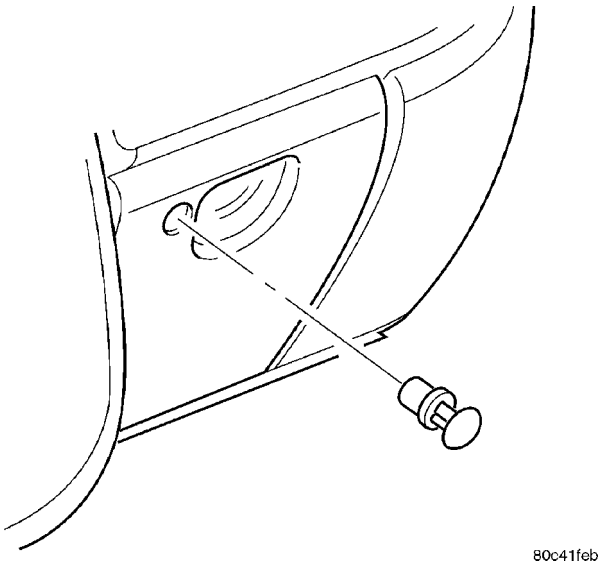

Fig. 13 GLOVE BOX LOCK CYLINDER

INSTALLATION

(1) Insert key into lock cylinder.

(2) Push lock cylinder into latch and turn to straight up and down position.

(3) Remove key.

(4) Reassemble glove box assembly and reinstall into vehicle. Refer to Removal and Installation, Glove Box Door/Bin/Latch in this section.

INSTRUMENT PANEL ASSEMBLY

REMOVAL

(1) Open hood.

(2) Disconnect and isolate the battery negative cable (Fig. 14).

(3) Remove the instrument panel top cover (Fig. 15).

(a) Using a trim stick (special tool #C-4755) or equivalent, gently pry off the left and right A-pillar trim.

(b) Using a trim stick or equivalent, gently pry out the front power window switch from the instrument panel center bezel. Disconnect the harness connector and remove.

(c) Remove the one center bezel retaining screw.

(d) Pull off the HVAC control knobs.

(e) Using a trim stick or equivalent, gently pry off the center bezel and remove.

(f) Remove the two top cover retaining screws.

(g) Gently pull rearward on the top cover and unlatch it from the instrument panel and remove.

(4) Remove two screws retaining HVAC control.

(5) Pull the HVAC control out of instrument panel, disconnect the one wiring connector, the one vacuum harness connector, and disconnect the two control cables. Remove HVAC control from vehicle.

(6) Remove the two retaining screws to the upper and lower steering column shrouds.

(7) Gently pry the upper and lower shrouds apart and remove from steering column.

(8) Remove the steering column cover. Pull top down, lower to floor and twist steering column cover off instrument panel hinge pins.

(9) Disconnect the steering column wire connectors:

(a) Ignition Switch

(b) Multi-Function Switch

(c) Clockspring

CAUTION: Lock the steering wheel in the straight ahead position. This will prevent clockspring damage when the steering wheel rotates freely.

(10) Remove steering column:

(a) Remove the steering column pinch bolt at the base of the lower coupler.

(b) Remove the four retaining nuts to the steering column.

(c) Pull column rearward and out of instrument panel opening and remove from vehicle.

(11) Remove the two brake pedal support bracket, instrument panel retaining bolts (Fig. 16).

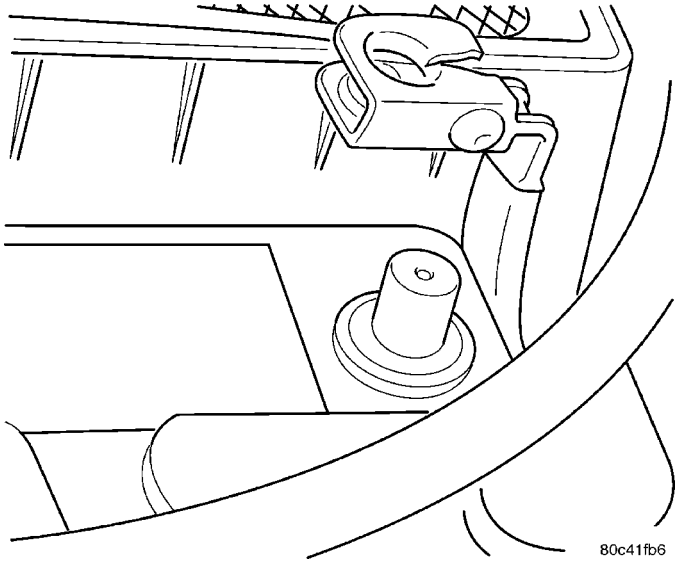

Fig. 14 BATTERY NEGATIVE CABLE REMOVAL/ INSTALLATION

(12) Remove two screws to the left instrument panel end cap.

(13) Pull the left end cap rearward to unsnap and remove it from vehicle.

(14) Disconnect the five left side wiring connectors:

(a) Data Link Connector

(b) Two main instrument panel connectors.

(c) Brake Switch

INSTRUMENT PANEL ASSEMBLY (Continued)

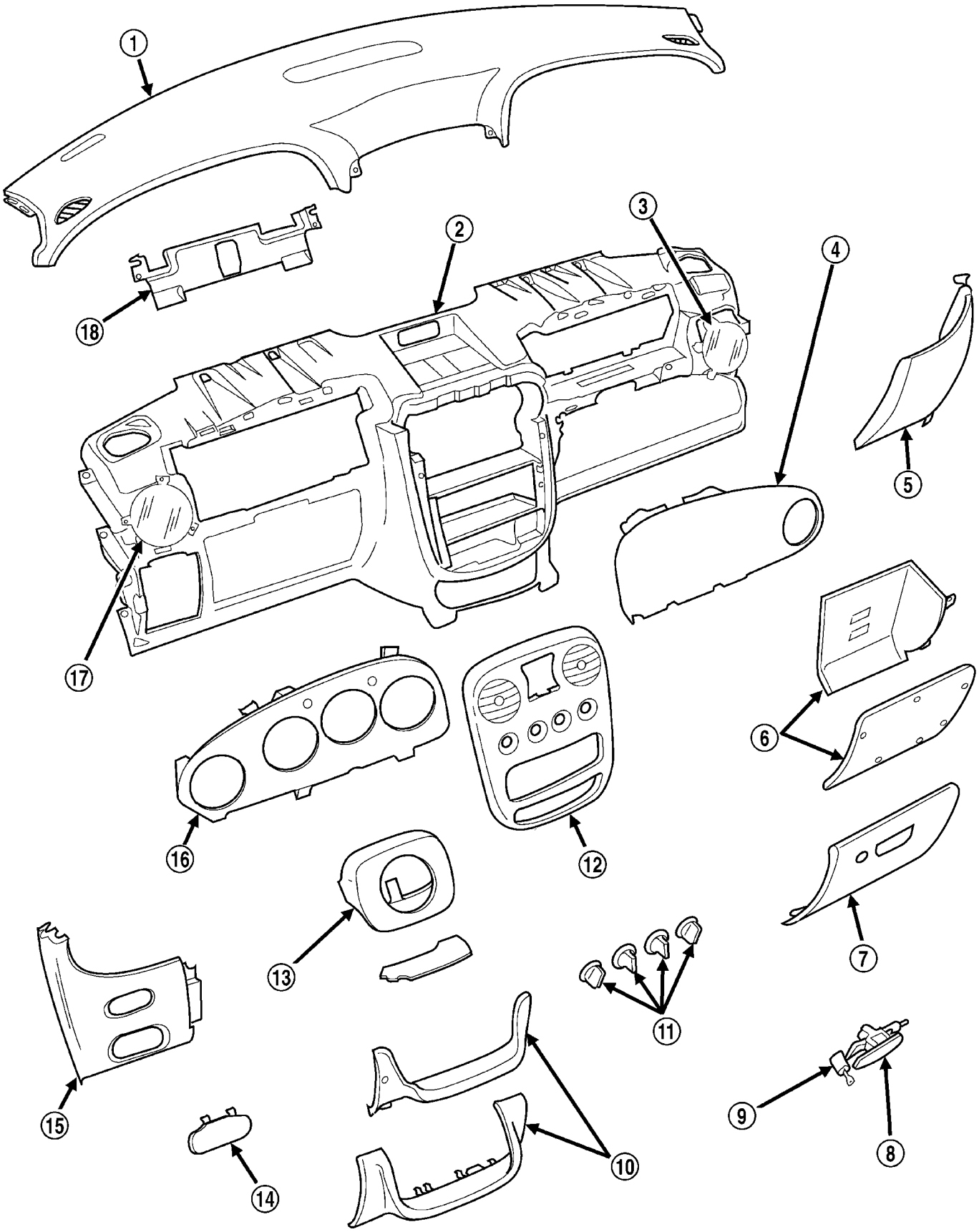

Fig. 15 INSTRUMENT PANEL ASSEMBLY

INSTRUMENT PANEL ASSEMBLY (Continued)

1 - INSTRUMENT PANEL TOP COVER
2 - INSTRUMENT PANEL
3 - INSTRUMENT PANEL OUTBOARD A/C OUTLET HOUSING
4 - PASSENGER AIRBAG COVER, PASSENGER AIRBAG MODULE
5 - INSTRUMENT PANEL END CAP
6 - INSTRUMENT PANEL GLOVE BOX
7 - INSTRUMENT PANEL GLOVE BOX DOOR
8 - INSTRUMENT PANEL GLOVE BOX LATCH
9 - LOCK CYLINDER
10 - INSTRUMENT PANEL STEERING COLUMN COVER
11 - HVAC CONTROL KNOBS
12 - INSTRUMENT PANEL CENTER BEZEL
13 - STEERING COLUMN SHROUD
14 - FUSE COVER
15 - INSTRUMENT PANEL END CAP
16 - INSTRUMENT CLUSTER BEZEL
17 - INSTRUMENT PANEL CLUSTER BEZEL A/C OUTLET HOUSING
18 - CLUSTER SUPPORT PANEL

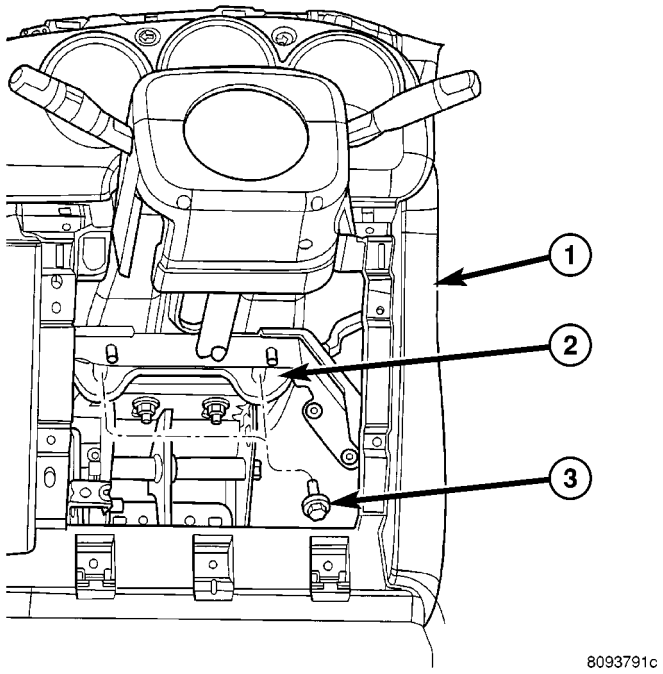

Fig. 16 BRAKE PEDAL SUPPORT BRACKET, INSTRUMENT PANEL RETAINING BOLTS

1 - INSTRUMENT PANEL
2 - FLOOR PAN BRACKET
3 - ATTACHING SCREW(S)

(d) Left Side Body Harness
(e) Left Door Harness

(15) Remove the two left side A-pillar, instrument panel retaining bolts and one nut. (Fig. 17)

(16) Remove two retaining bolts at the left side of the center support bracket (Fig. 18).

(17) Remove four screws to center console.

(18) Using a trim stick or equivalent, gently pry rear power window switch out of console and disconnect wiring and remove.

(19) Pull parking brake handle all the way up.

(20) Lift up the front of the center console to gain access to the power outlet connector.

(21) Disconnect one wire connector to console mounted auxiliary power outlet.

(22) Pull up on rear of console first to clear parking brake handle and remove from vehicle.

(23) If equipped with an automatic, remove the shifter handle and shifter bezel.

(a) **Shifter Handle** - Loosen the set screw retaining the shifter handle and pull up on handle to remove.

(b) **Shifter Bezel** - Pull upward on edge of shifter bezel, disconnect the illumination lamp and remove bezel.

(24) Disconnect and remove the two remaining center console wiring connectors:

(a) Occupant Restraint Controller (ORC) connector

(b) Park Brake Switch connector

(25) Remove two retaining bolts at the right side of the center support bracket (Fig. 18).

NOTE: The center console wiring is routed underneath the rear floor heat duct. Loosen the retainers holding down the heat duct and you can maneuver the wiring from underneath it without removal.

(26) Remove glove box assembly:

(a) Open glove box and push in on the sides of the glove box bin to allow the retainers to clear the instrument panel.

(b) Let the glove box drop down and give it quick pull downward to disengage the hinge.

(27) Remove two screws to the right instrument panel end cap.

(28) Pull end cap rearward to unsnap and remove from vehicle.

(29) Remove the two right side A-pillar, instrument panel retaining bolts and one nut (Fig. 17).

(30) Disconnect the right side instrument panel wire connectors:

(a) Antenna
(b) Overhead Systems (Fig. 19)
(c) Blower Motor
(d) Left Door Harness
(e) Body Harness

(31) Remove the four fence line instrument panel retaining bolts (Fig. 20).

(32) With the help of an assistant, carefully remove the instrument panel from the vehicle being careful not to damage the instrument panel or vehicle interior.

INSTRUMENT PANEL ASSEMBLY (Continued)

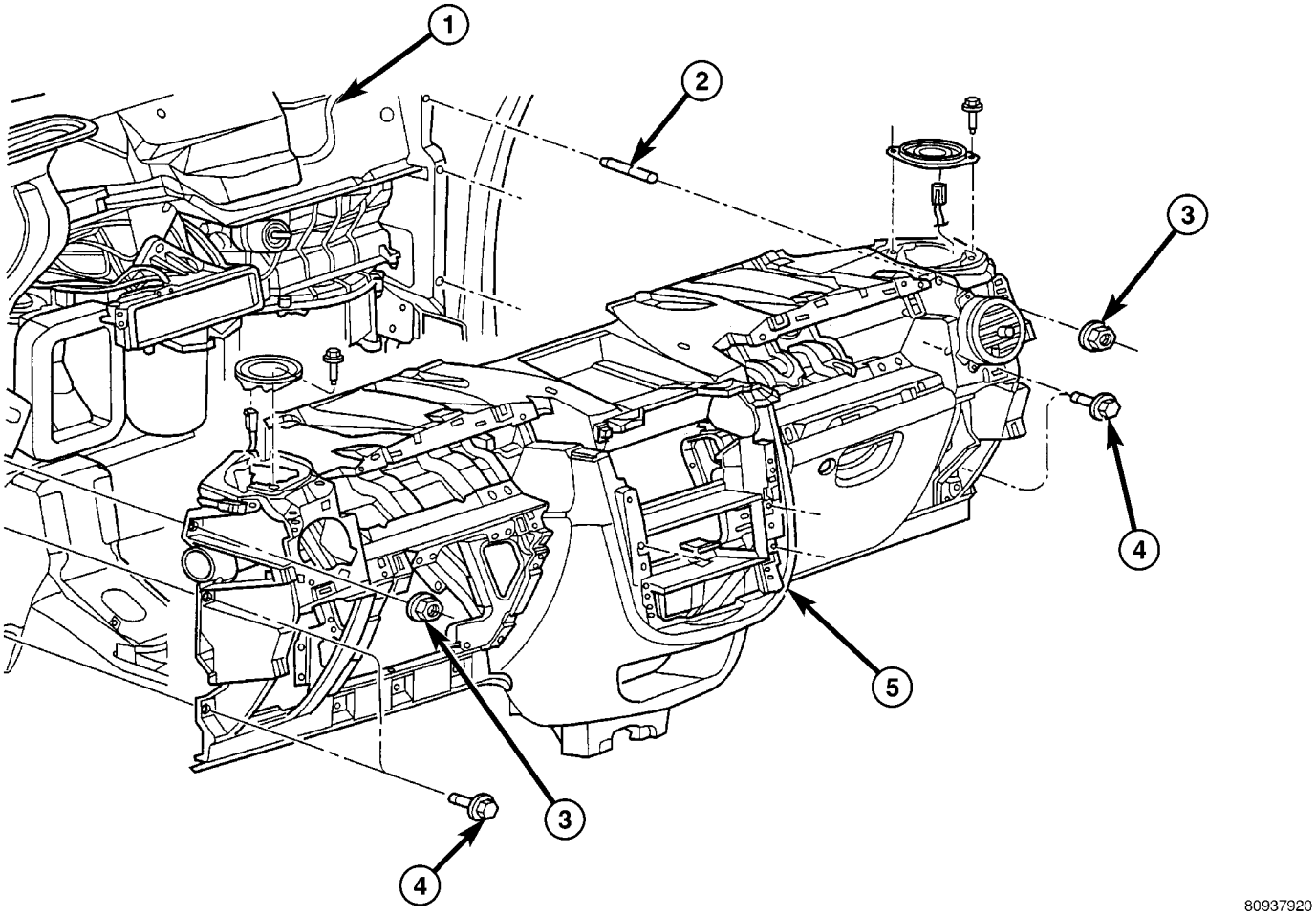

Fig. 17 INSTRUMENT PANEL

1 - WINDSHIELD COWL
2 - INSTRUMENT PANEL TO COWL STUD RT/LT
3 - INSTRUMENT PANEL TO COWL NUT(S)
4 - INSTRUMENT PANEL TO COWL SCREW(S)
5 - INSTRUMENT PANEL

NOTE: If the instrument panel is being replaced, all the components left on the assembly must be transferred.

This would include:

- Passenger Airbag
- Instrument Cluster and Cluster Bezel
- Cluster Area Support Panel
- Remote Keyless Entry Module (if equipped)
- Radio
- Accessory Switch Bezel
- Left and Right Instrument Panel Speakers
- Instrument Panel Wire Harness
- Right Instrument Panel A/C Outlet Housing Assembly
- All A/C and Heat Duct work and Plumbing

INSTALLATION

(1) With the help of an assistant, carefully install the instrument panel in the vehicle being careful not to damage the instrument panel or vehicle interior.

(2) Install the four fence line instrument panel retaining bolts (Fig. 20).

(3) Connect the right side instrument panel wire connectors:

(a) Antenna
(b) Overhead Systems (Fig. 19)
(c) Blower Motor
(d) Left Door Harness
(e) Body Harness

(4) Install the two right side A-pillar, instrument panel retaining bolts and one nut (Fig. 17).

(5) Place the right end cap in position and snap into place.

INSTRUMENT PANEL ASSEMBLY (Continued)

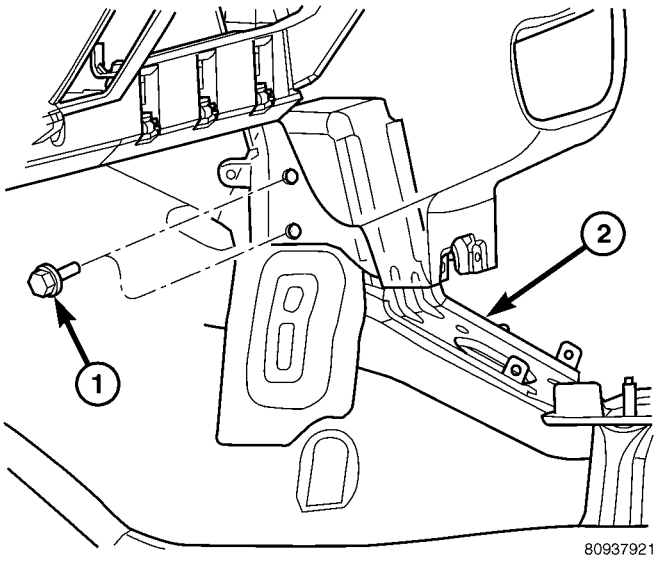

Fig. 18 INSTRUMENT PANEL CENTER SUPPORT RETAINING BOLTS

1 - ATTACHING SCREW(S)
2 - FLOOR PAN BRACKET

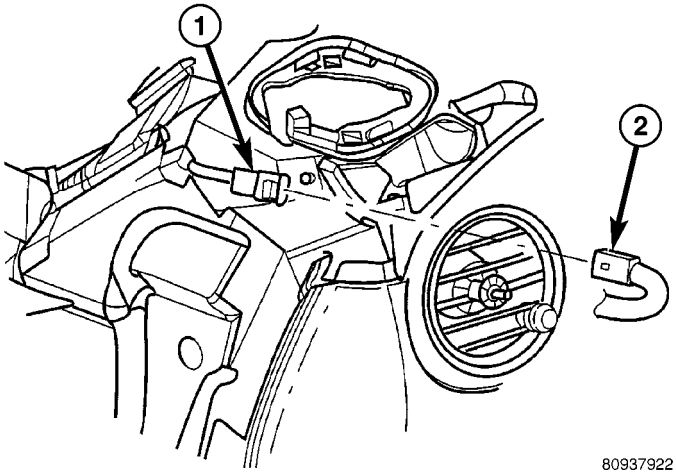

Fig. 19 INSTRUMENT PANEL TO OVERHEAD SYSTEMS JUMPER HARNESS CONNECTOR - TYPICAL LEFT OR RIGHT

1 - INSTRUMENT PANEL
2 - HEADLINER CONNECTOR

(6) Install two screws to the right instrument panel end cap.

(7) Install glove box assembly:

(a) Place glove box assembly in position and make the orientation of the hinge is correct and snap glove box assembly hinge into place (Fig. 9).

(b) Lift glove box assembly up, push in on the box/bin sides to allow the glove box to pass by the instrument panel.

(c) Close glove box.

NOTE: The center console wiring is routed underneath the rear floor heat duct. You can maneuver the wiring underneath the rear seat heat duct without removal.

(8) Install two retaining bolts at the right side of the center support bracket (Fig. 18).

(9) Connect the following two center console wiring connectors:

(a) Occupant Restraint Controller (ORC) connector

(b) Park Brake Switch connector

(10) If equipped with an automatic, install the shifter handle and shifter bezel.

(a) **Shifter Bezel** - Connect the illumination lamp, place in position and snap into place.

(b) **Shifter Handle** - Place the shifter handle on the shifter assembly, tighten the set screw retaining the shifter handle.

(11) Place front of console into place and then rear over parking brake handle.

(12) Lift up the front of the console and connect one wire connector to console mounted auxiliary power outlet.

(13) Release parking brake handle.

(14) Connect wiring to rear power window switch and snap into rear of center console.

(15) Install four screws to center console.

(16) Install two retaining bolts at the left side of the center support bracket (Fig. 18).

(17) Install the two left side A-pillar, instrument panel retaining bolts and one nut (Fig. 17).

(18) Connect the five left side wiring connectors:

(a) Data Link Connector

(b) Two main instrument panel connectors.

(c) Brake Switch

(d) Left Side Body Harness

(e) Left Door Harness

(19) Place the left end cap in position and snap into place.

(20) Install two screws to the left instrument panel end cap.

(21) Install the two brake pedal support bracket, instrument panel retaining bolts (Fig. 16).

(22) Install steering column:

(a) Place column in instrument panel opening.

(b) Install the four retaining nuts to the steering column.

(c) Install the steering column pinch bolt at the base of the lower coupler.

(23) Connect the steering column wire connectors:

(a) Ignition Switch

(b) Multi-Function Switch

(c) Clockspring

INSTRUMENT PANEL ASSEMBLY (Continued)

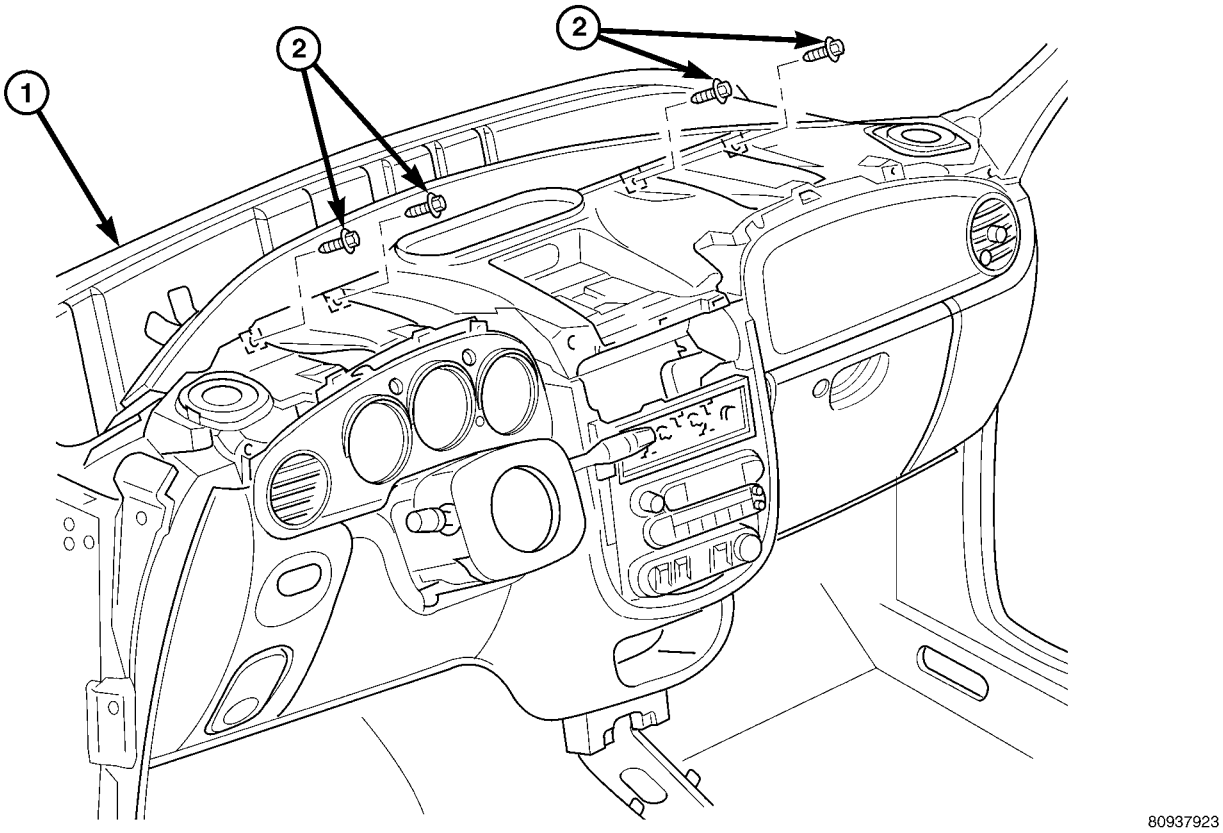

Fig. 20 INSTRUMENT PANEL FENCE LINE RETAINING BOLTS

1 - WINDSHIELD COWL
2 - INSTRUMENT PANEL COWL ATTACHING SCREW(S)

(24) Place steering column cover in position and make sure the orientation of the hinge is correct and snap bezel hinge into place

(25) Rotate steering column cover upward and snap into place.

(26) Place upper and lower steering column shrouds into place and snap together.

(27) Install the two retaining screws to the upper and lower steering column shrouds.

(28) Place HVAC control head into place in instrument panel.

(29) Connect the following onto the HVAC control head:

(a) Two control cables

(b) Vacuum harness connector

(c) One wiring connector

(30) Install the two screws retaining the HVAC control head.

(31) Install the instrument panel top cover.

(a) Place the top cover into place. Line up the fasteners with each slot and firmly snap into place.

(b) Install the two top cover retaining screws.

(c) Place the center bezel into position, lining up the fasteners with the slots and snap into place.

(d) Install the HVAC control knobs.

(e) Install the one center bezel retaining screw.

(f) Connect the harness connector to the front power window switch. Align the front power window switch into the instrument panel center bezel opening and snap into place.

(g) Install the left and right A-pillar trim.

(32) Connect the battery negative cable (Fig. 14).

(33) Close hood.

(34) Verify vehicle and system operation.

INSTRUMENT PANEL CENTER BEZEL

REMOVAL

(1) Open hood.

(2) Disconnect and isolate the battery negative cable (Fig. 14).

(3) Using a trim stick (special tool #C-4755) or equivalent, gently pry out the front power window switch from the instrument panel switch bezel (Fig. 21) and disconnect the switch electrical connector.

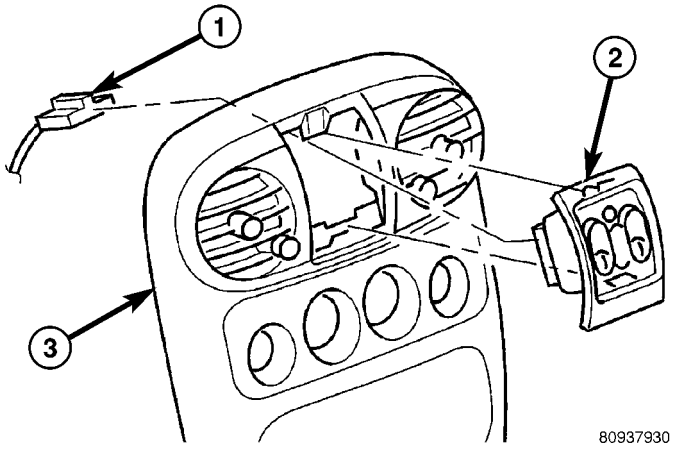

Fig. 21 FRONT POWER WINDOW SWITCH

1 - FRONT POWER WINDOW SWITCH CONNECTOR
2 - FRONT POWER WINDOW SWITCH
3 - INSTRUMENT PANEL BEZEL

(4) Remove HVAC control knobs from control head (Fig. 22).

(5) Remove one retaining screw to center bezel inside window switch opening (Fig. 23).

(6) Using a trim stick or equivalent, gently pry the center bezel out of the instrument panel and remove (Fig. 23) from vehicle.

INSTALLATION

(1) Place center bezel over opening. Align the retaining clips and press firmly into place (Fig. 23).

(2) Install one center bezel retaining screw.

(3) Reconnect the front power window switch connector and reinstall into center bezel opening (Fig. 21).

(4) Install the four HVAC control knobs (Fig. 22).

(5) Reconnect the battery negative cable (Fig. 14).

(6) Close hood.

(7) Verify operation of vehicle and systems.

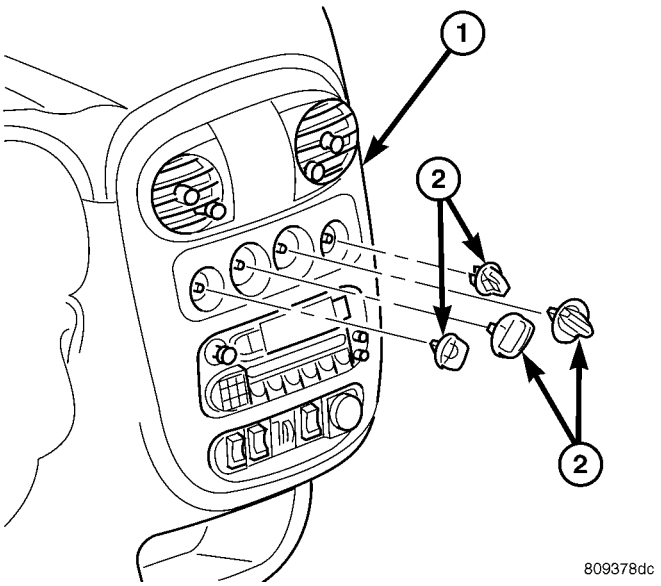

Fig. 22 HVAC CONTROL KNOBS

1 - CENTER BEZEL
2 - HVAC KNOB(S)

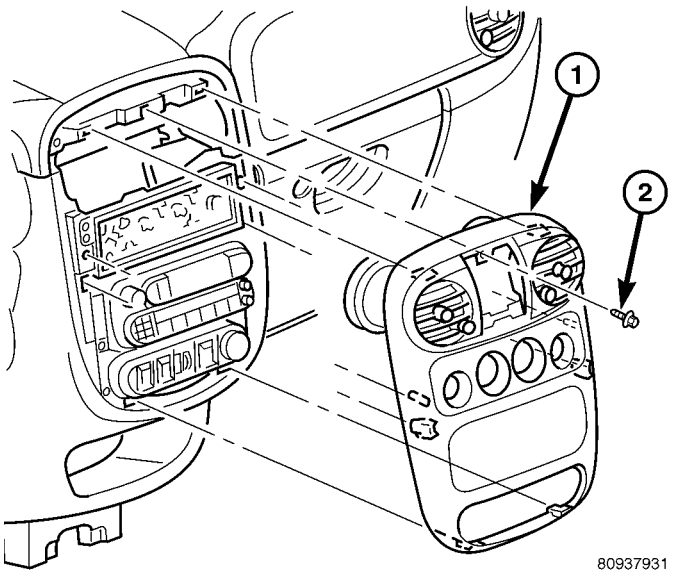

Fig. 23 INSTRUMENT PANEL CENTER BEZEL AND RETAINING SCREW

1 - CENTER BEZEL
2 - ATTACHING SCREW

INSTRUMENT PANEL CENTER BEZEL CONTROL KNOBS

REMOVAL

(1) Open door.

(2) Pull off the HVAC control knobs (Fig. 22).

INSTRUMENT PANEL CENTER BEZEL CONTROL KNOBS (Continued)

INSTALLATION

(1) Install the HVAC control knobs (Fig. 22).
(2) Close door.
(3) Verify vehicle and system operation.

INSTRUMENT PANEL END CAP

REMOVAL

LEFT END CAP

(1) Remove the left lower instrument panel bezel. Pull top rearward, lower to floor and with a quick pulling motion remove off instrument panel.

(2) Remove two screws to the left instrument panel end cap.

(3) Pull the left end cap rearward to unsnap (Fig. 24). Maneuver it out from underneath the left A-pillar trim and top cover. Removal of these components is not necessary.

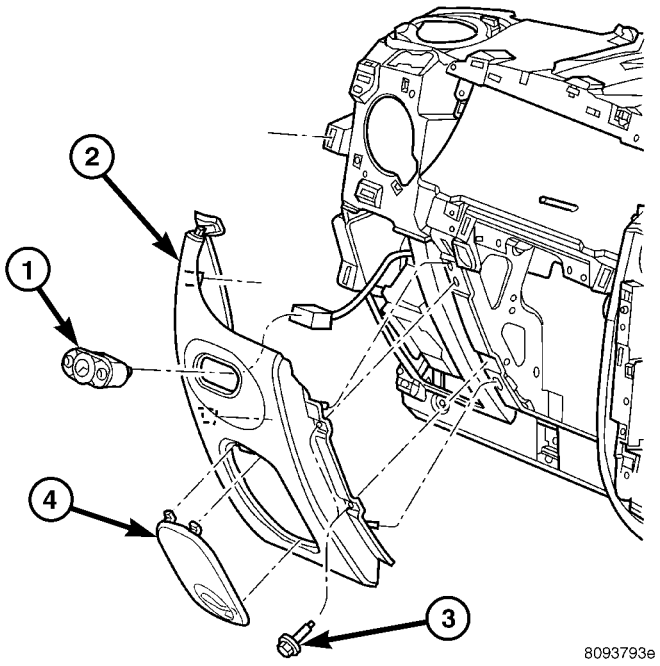

Fig. 24 LEFT INSTRUMENT PANEL END CAP - TYPICAL RT & LT SIDE

1 - POWER MIRROR SWITCH
2 - INSTRUMENT PANEL LEFT END CAP
3 - ATTACHING SCREW(S)
4 - INSTRUMENT PANEL FUSE ACCESS COVER

(4) Disconnect the power mirror switch wiring connector (if equipped) and remove from vehicle.

RIGHT END CAP

(1) Remove glove box assembly:

(2) Open glove box and push in on the sides of the glove box bin to allow the retainers to clear the instrument panel.

(3) Let the glove box drop down to the floor.

(4) Remove two screws to the right instrument panel end cap.

(5) Pull end cap rearward to unsnap and remove from vehicle. Maneuver it out from underneath the right A-pillar trim and top cover. Removal of these components is not necessary.

INSTALLATION

LEFT END CAP

(1) Connect the power mirror switch wiring connector (if equipped).

(2) Place the left end cap in position and snap into place. Make sure that it is underneath the A-pillar trim and top cover.

(3) Install two screws to the left instrument panel end cap.

(4) Place left lower instrument panel bezel in position and make sure the orientation of the hinge is correct and snap bezel hinge into place

(5) Roll bezel upward and snap into place.

RIGHT END CAP

(1) Place the right end cap in position and snap into place. Make sure that it is underneath the A-pillar trim and top cover.

(2) Install two screws to the right instrument panel end cap.

(3) Lift glove box assembly up, push in on the box/bin sides to allow the glove box retainers to pass by the instrument panel.

(4) Close glove box door.

INSTRUMENT PANEL TOP COVER

REMOVAL

(1) Open hood.

(2) Disconnect and isolate the battery negative cable (Fig. 14).

(3) Using a trim stick (special tool #C-4755) or equivalent, gently pry off the left and right A-pillar trim.

(4) Using a trim stick or equivalent, gently pry out the front power window switch from the instrument panel center bezel. Disconnect the harness connector and remove (Fig. 21).

(5) Remove the one center bezel retaining screw (Fig. 23).

(6) Pull off the HVAC control knobs (Fig. 22).

(7) Using a trim stick or equivalent, gently pry off the center bezel and remove (Fig. 23).

(8) Remove the two top cover attaching screws (Fig. 25).

INSTRUMENT PANEL TOP COVER (Continued)

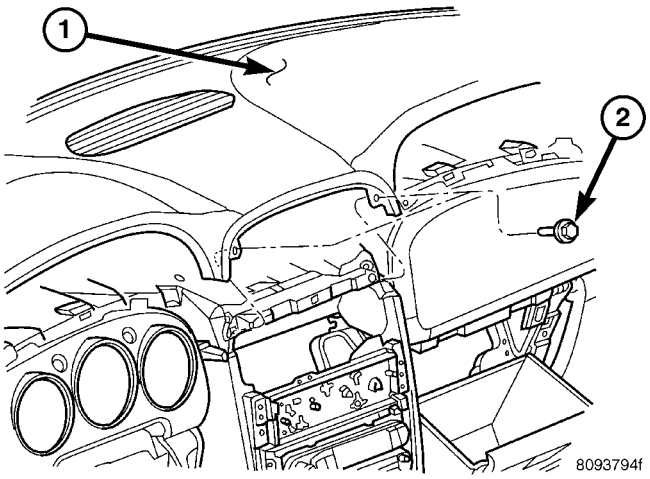

Fig. 25 TOP COVER RETAINING SCREWS

1 - INSTRUMENT PANEL TOP COVER
2 - ATTACHING SCREW(S)

(9) Gently pull rearward on the top cover and unlatch it from the instrument panel and remove (Fig. 26).

INSTALLATION

(1) Place the top cover into place. Line up the fasteners with each slot and firmly, pushing forward, snap into place (Fig. 14).

(2) Install the two top cover attaching screws (Fig. 25).

(3) Place the center bezel into position, lining up the fasteners with the slots and snap into place (Fig. 23).

(4) Install the HVAC control knobs (Fig. 22).

(5) Install the one center bezel retaining screw (Fig. 23).

(6) Connect the harness connector to the front power window switch. Align the front power window switch into the instrument panel center bezel opening and snap into place (Fig. 21).

(7) Install the left and right A-pillar trim.

(8) Connect the battery negative cable (Fig. 14).

(9) Close hood.

(10) Verify vehicle and system operation.

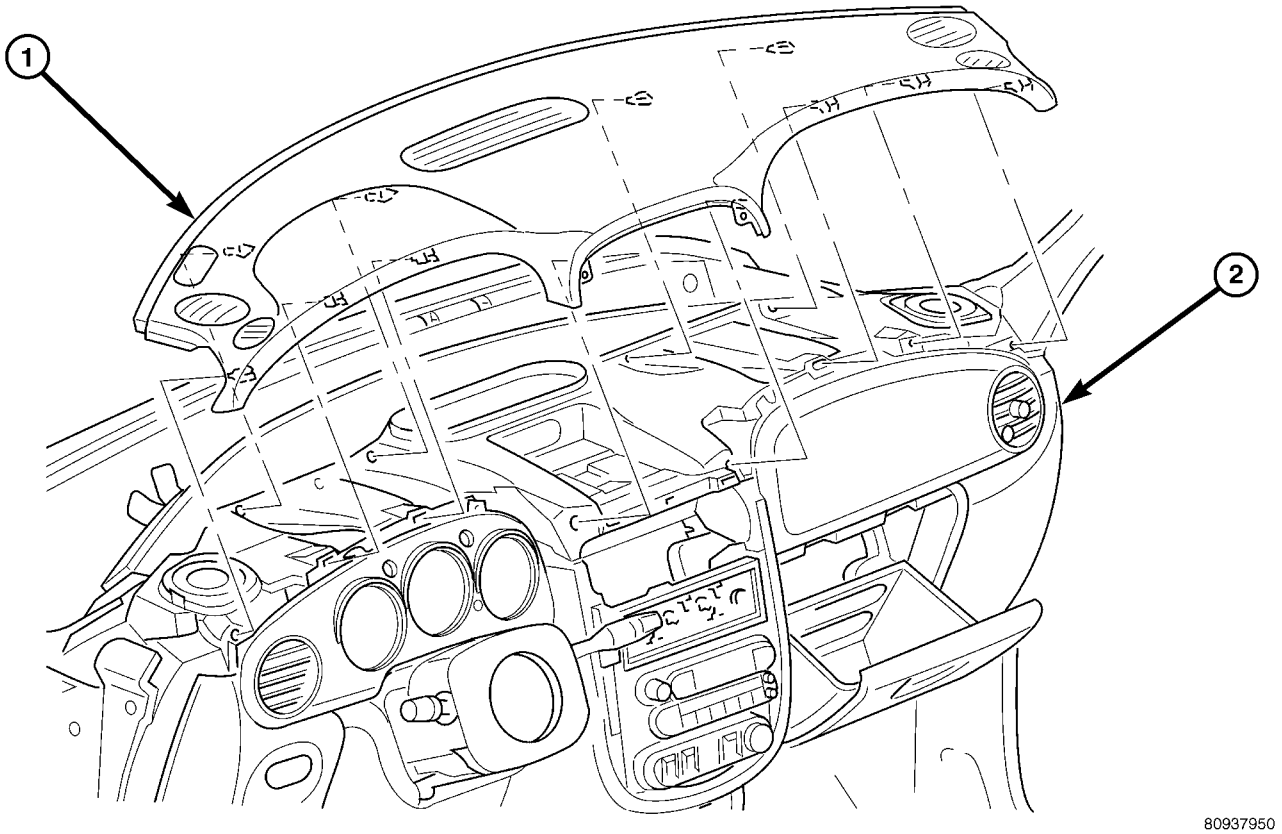

Fig. 26 INSTRUMENT PANEL TOP COVER

1 - INSTRUMENT PANEL TOP COVER
2 - INSTRUMENT PANEL

STEERING COLUMN OPENING COVER

REMOVAL

(1) Pull the top of the steering column cover down.
(2) Swing top of steering column cover to floor.
(3) Rotate steering column cover off instrument panel hinge pins (Fig. 27).

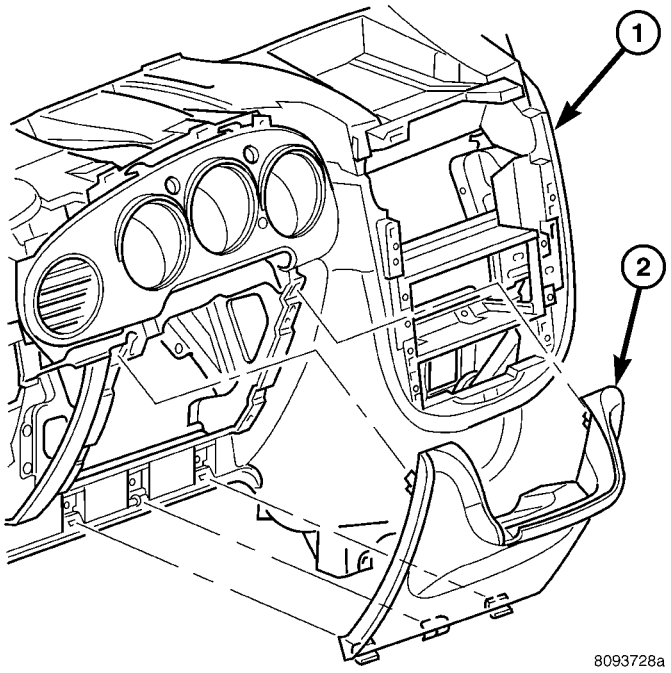

Fig. 27 STEERING COLUMN OPENING COVER

1 - INSTRUMENT PANEL
2 - INSTRUMENT PANEL STEERING COLUMN COVER

INSTALLATION

(1) Place the steering column cover into position and make sure the orientation of the hinge is correct and rotate the cover into place (Fig. 28).

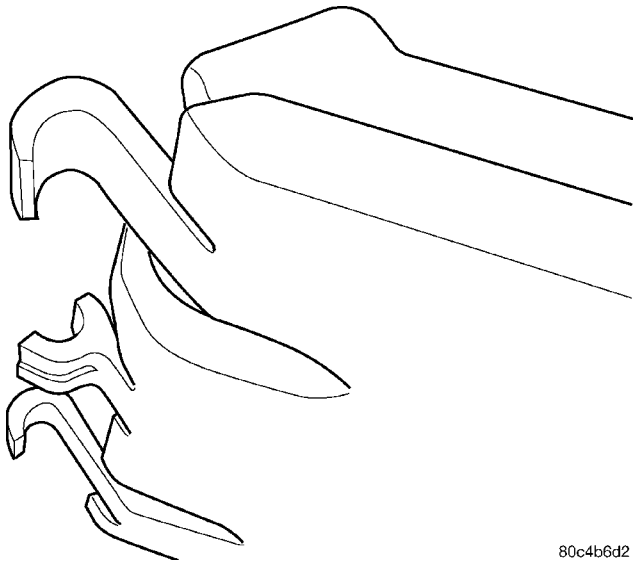

Fig. 28 STEERING COLUMN COVER HINGE

(2) Rotate the cover upward and snap into place (Fig. 27).

INTERIOR

TABLE OF CONTENTS

	page
A-PILLAR TRIM	
REMOVAL	60
INSTALLATION	60
B-PILLAR TRIM	
REMOVAL	60
INSTALLATION	60
BODY VENT	
REMOVAL	61
INSTALLATION	61
FLOOR CARPET	
REMOVAL	61
INSTALLATION	61
SIDE COWL TRIM PANEL	
REMOVAL	62
INSTALLATION	62
UPPER C-PILLAR TRIM	
REMOVAL	63
INSTALLATION	63
DOOR SILL TRIM	
REMOVAL	63
INSTALLATION	63
UPPER D-PILLAR TRIM	
REMOVAL	63
INSTALLATION	63
HEADLINER	
REMOVAL	63
INSTALLATION	64
LOWER QUARTER TRIM PANEL	
REMOVAL	64
INSTALLATION	64
INSIDE REAR VIEW MIRROR	
REMOVAL	65
INSTALLATION	65
SUN VISOR	
REMOVAL	65
INSTALLATION	65

A-PILLAR TRIM

REMOVAL

(1) Disengage clips attaching trim to A-pillar.
(2) Remove A-pillar trim from vehicle (Fig. 1).

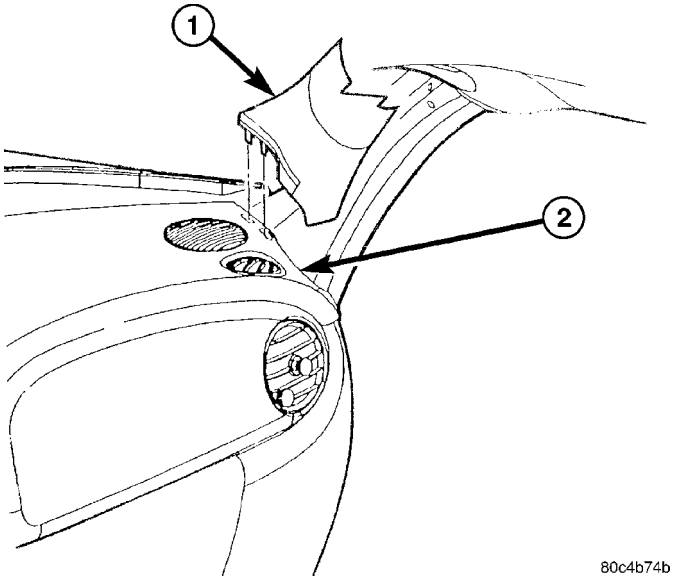

Fig. 1 A-PILLAR TRIM

1 - WINDSHIELD (A-PILLAR) SIDE GARNISH TRIM
2 - INSTRUMENT PANEL TOP COVER

INSTALLATION

(1) Position A-pillar trim panel to A-pillar (Fig. 1) .
(2) Align locating pins on backside of trim panel to mating holes in A-pillar.
(3) Push clips on trim panel into slots in A-pillar.

B-PILLAR TRIM

REMOVAL

(1) Remove shoulder belt height control knob.
(2) Remove bolt attaching turning loop to belt adjuster (Fig. 2).
(3) Remove bolt attaching lower seat belt anchor to floor pan kick- up.
(4) Remove upper B-pillar trim.
(5) Remove access cover from B-pillar trim.
(6) Disengage clips attaching trim to B-pillar.
(7) Feed seat belt turning loop and seat belt through trim panel.
(8) Remove lower B-pillar trim from vehicle.

INSTALLATION

NOTE: Tighten all seat belt bolts to 40 N·m (40 ft. lbs.) torque.

(1) Position lower B-pillar trim panel near B-pillar (Fig. 2) .

B-PILLAR TRIM (Continued)

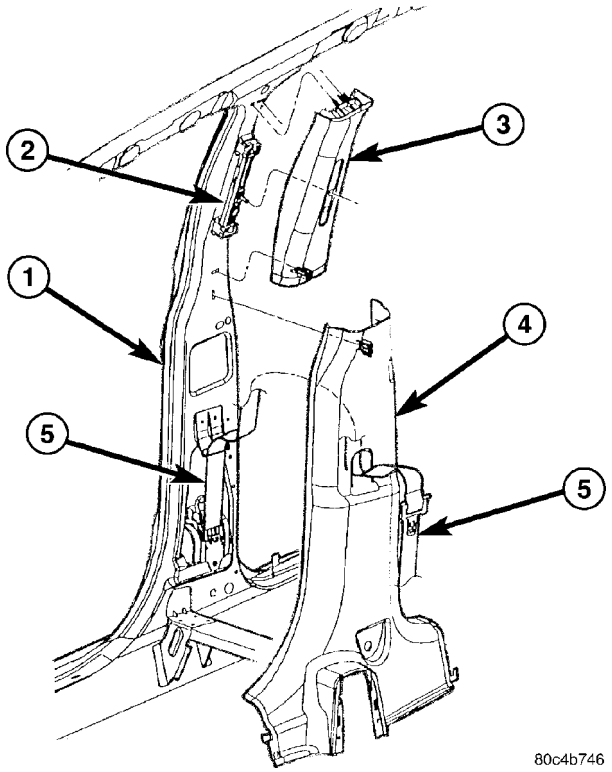

Fig. 2 B-PILLAR TRIM

1 - B-PILLAR
2 - SEAT BELT ADJUSTER
3 - B-PILLAR UPPER TRIM COVER
4 - B-PILLAR LOWER TRIM COVER
5 - SEAT BELT ASSEMBLY

(2) Feed seat belt turning loop and seat belt through trim panel.

(3) Align locating pins on backside of trim panel to mating holes in B-pillar.

(4) Push clips on trim panel into slots in B-pillar.

(5) Install access cover to B-pillar trim.

(6) Install bolt attaching turning loop to belt adjuster.

(7) Move height adjuster to the lowest position.

(8) Install upper B-pillar trim.

(9) Install shoulder belt height control knob.

(10) Install bolt attaching lower seat belt anchor to floor pan kick-up.

BODY VENT

REMOVAL

(1) Hoist rear end of vehicle and support on safety stands.

(2) From behind rear bumper fascia below quarter panel, disengage clips attaching body vent to wheel well.

(3) Remove body vent from vehicle (Fig. 3).

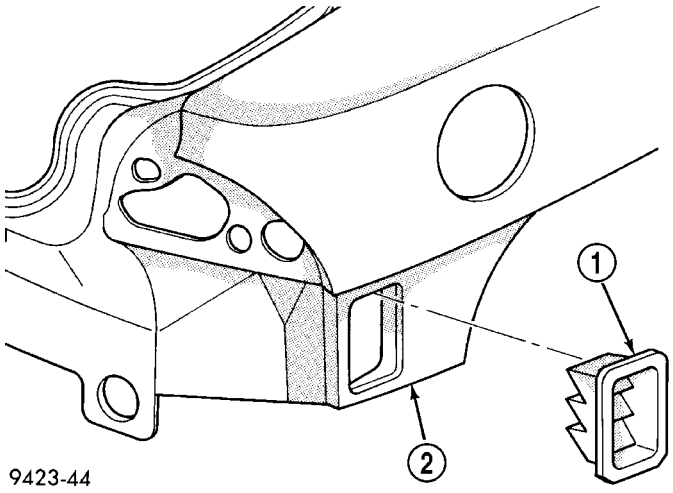

Fig. 3 BODY VENT

1 - BODY VENT
2 - TRUNK WELL SIDE PANEL

INSTALLATION

(1) Place body vent in vehicle.

(2) From behind rear bumper fascia below quarter panel, engage clips attaching body vent to wheel well.

(3) Lower vehicle.

FLOOR CARPET

REMOVAL

(1) Remove front seats.

(2) Remove rear seats from vehicle (Fig. 4)

(3) Remove door sill trim covers.

(4) Remove cowl trim covers.

(5) Remove center floor console.

(6) Remove rear seat pivot bezels and striker bezel.

(7) Remove lower fasteners from B-pillar trim panel.

(8) Pull carpet from behind trim panel.

(9) Fold carpet in half toward rear seat.

(10) Remove carpet through rear door opening.

INSTALLATION

The new carpet must be cut for installation. The area is marked on the reverse side of the carpet. The location is in front of the tunnel area.

(1) Install carpet through liftgate opening.

(2) Unfold carpet.

(3) Tuck carpet behind trim pane (Fig. 4) .

(4) Install lower fasteners holding B-pillar trim panel.

(5) Install center floor console.

(6) Install cowl trim covers.

(7) Install rear seat pivot bezels and striker bezel.

FLOOR CARPET (Continued)

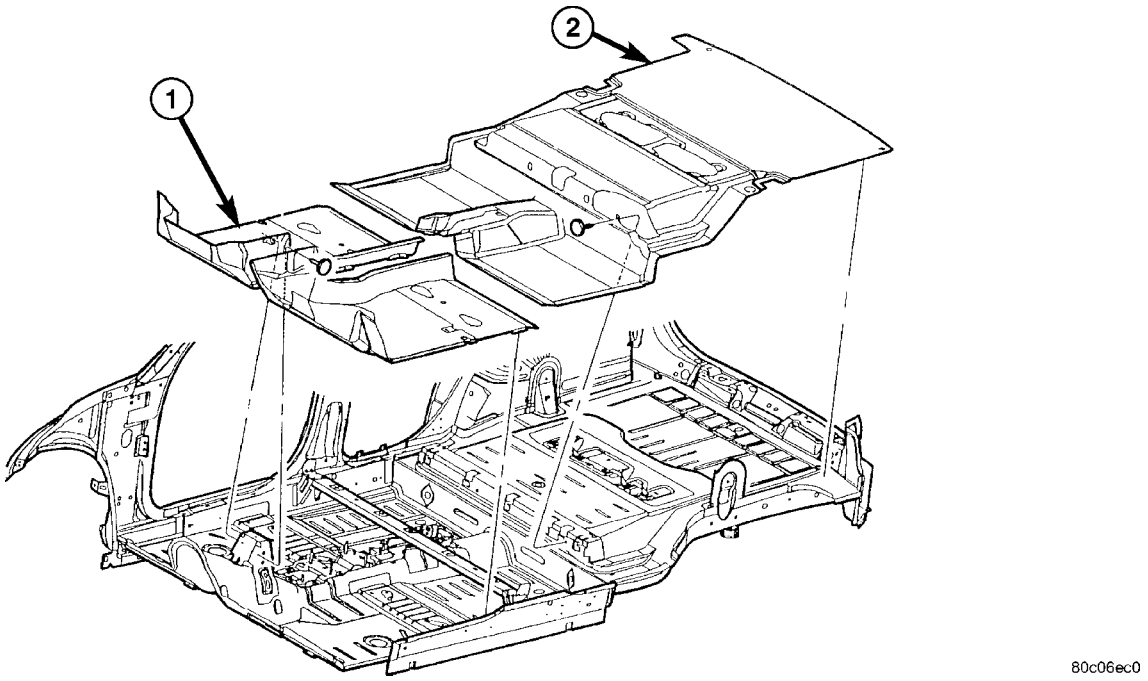

Fig. 4 CARPET

1 - PASSENGER FLOOR CARPET
2 - REAR PASSENGER FLOOR/CARGO AREA CARPET

(8) Install door sill trim covers.

(9) Install bolts attaching front seat belt lower anchors to floor. Tighten all seat belts to 40 N·m (30 ft. lbs.) torque.

(10) Install front seats.

(11) Install rear seats

SIDE COWL TRIM PANEL

REMOVAL

(1) Disengage clips attaching cowl trim to cowl side panel.

(2) Remove cowl trim from vehicle (Fig. 5).

INSTALLATION

(1) Position cowl trim panel to inner cowl panel (Fig. 5) .

(2) Align locating pins on backside of cowl trim panel to mating holes in inner cowl panel.

(3) Push clips on trim panel into slots in inner cowl panel.

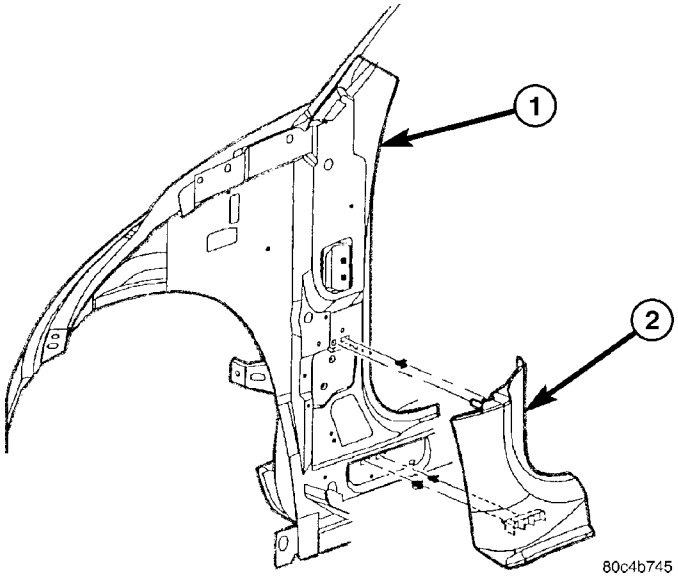

Fig. 5 SIDE COWL TRIM

1 - COWL ASSEMBLY
2 - COWL SIDE TRIM PANEL

UPPER C-PILLAR TRIM

REMOVAL

(1) Disengage clips attaching trim to C-pillar (Fig. 6).

(2) Remove upper trim panel from vehicle.

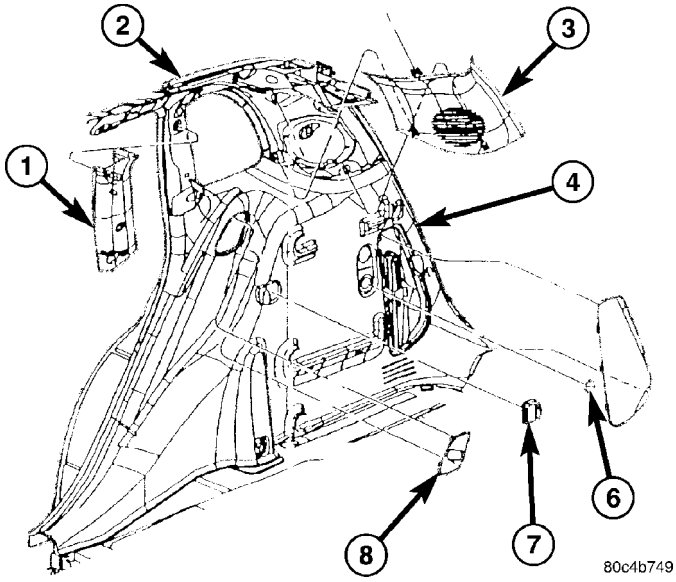

Fig. 6 UPPER C-PILLAR TRIM PANEL

1 - C-PILLAR UPPER TRIM PANEL
2 - REAR QUARTER PANEL
3 - D-PILLAR UPPER TRIM PANEL
4 - QUARTER LOWER TRIM PANEL
5 - JACK STORAGE ACCESS DOOR
6 - QUARTER TRIM PANEL LOWER PLUG
7 - VERTICAL BUMPER

INSTALLATION

(1) Place C-pillar trim panel in position (Fig. 6) .

(2) Push clips on trim panel into slots in upper C-pillar panel.

DOOR SILL TRIM

REMOVAL

(1) Open door to gain access to sill trim.

(2) Disengage clips attaching sill trim to door sill and door opening flange.

(3) Remove door sill trim from vehicle (Fig. 7).

INSTALLATION

(1) Position door sill trim on door sill (Fig. 7) .

(2) Align locating pins on backside of trim panel to holes in door sill.

(3) Engage clips on trim panel into slots in door sill.

(4) Engage clips on trim panel onto door opening flange.

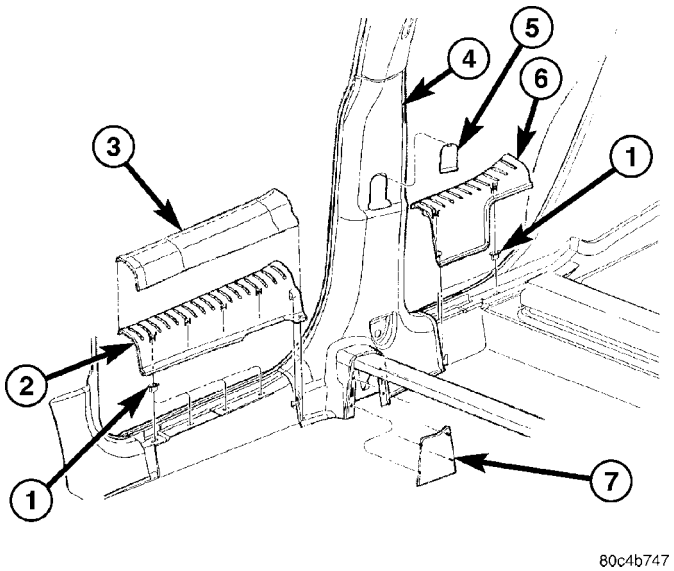

Fig. 7 DOOR SILL TRIM

1 - SILL SCUFF PLATE ATTACHING NUT
2 - FRONT DOOR SILL SCUFF PLATE
3 - FRONT SILL SCUFF PROTECTOR - RHD
4 - B-PILLAR
5 - B-PILLAR SEAT BELT ACCESS COVER
6 - REAR DOOR SILL SCUFF PLATE
7 - CLOSE OUT COVER

(5) Press downward on trim panel to fully engage all clips.

UPPER D-PILLAR TRIM

REMOVAL

(1) Disengage clips attaching trim to D-pillar (Fig. 6) .

(2) Remove upper trim panel from vehicle.

INSTALLATION

(1) Place D-pillar trim panel in position (Fig. 6) .

(2) Push clips on trim panel into slots in upper D-pillar panel.

HEADLINER

REMOVAL

(1) Remove screws attaching sun visors to roof header panel (Fig. 8).

(2) Disconnect wire connector from lighted vanity mirror, if so equipped.

(3) Remove trim lace, if equipped with sun roof.

(4) Remove sun visors from vehicle.

(5) Remove A-pillar trim covers.

(6) Remove B-pillar trim panels.

(7) Remove C-pillar and D-pillar trim panels.

(8) Remove assist handle, if so equipped.

HEADLINER (Continued)

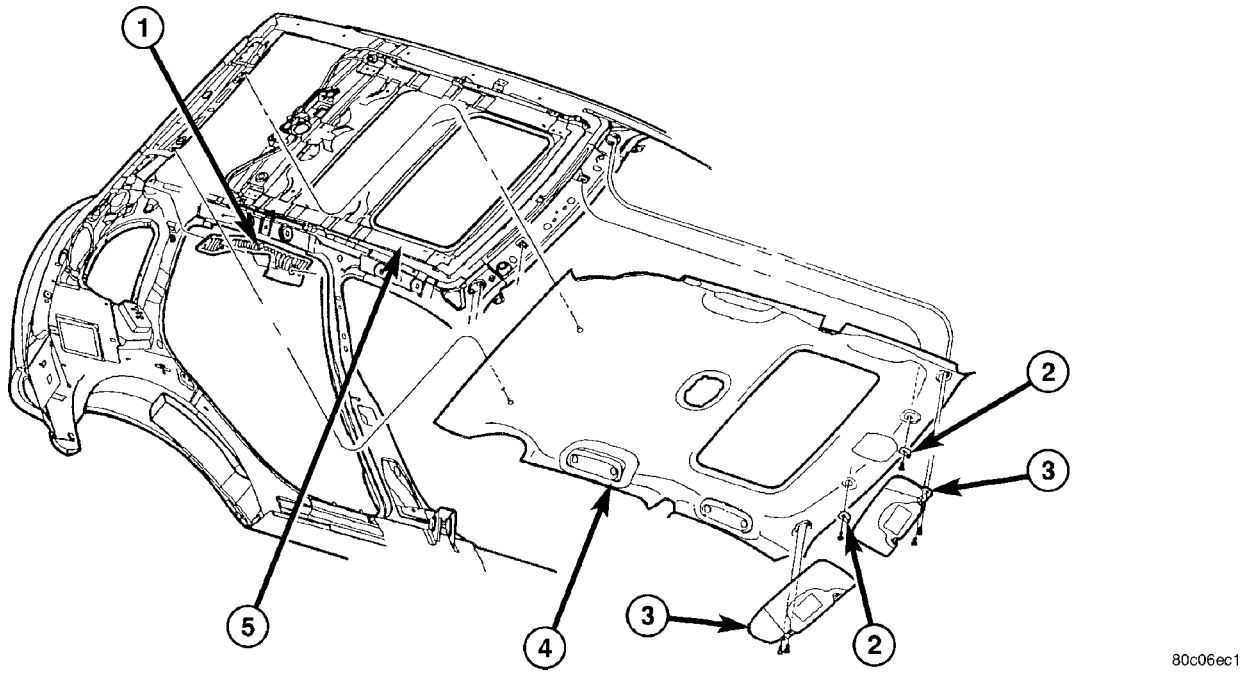

Fig. 8 HEADLINER WITH SUN ROOF - TYPICAL

1 - HEADLINER REAR QUARTER FOAM
2 - HEADLINER VISOR RECEPTACLE
3 - SUN VISOR
4 - HEADLINER PANEL ASSEMBLY
5 - SUN ROOF ASSEMBLY

(9) Remove sun visor hooks.
(10) Remove coat hooks, if so equipped.
(11) Remove two push in fasteners at rear of headliner.
(12) Disengage dome lamp wire connector, at rear of headliner.
(13) Remove push in fastener attaching wiring to C-pillar.
(14) Remove headliner through door opening.

INSTALLATION

(1) Position headliner in vehicle (Fig. 8).
(2) Install sun visor hooks, if so equipped.
(3) Install two push in fastener at rear of headliner.
(4) Install coat hooks, if so equipped.
(5) Install assist handles, if so equipped.
(6) Install push in fastener attaching headliner wiring to C-pillar.
(7) Connect dome lamp wire connector, at rear of headliner.
(8) Install (upper) quarter panel trim panel.
(9) Install B-pillar trim panels.
(10) Install A-pillar trim covers.
(11) Install trim lace, if equipped with sun roof.
(12) Install sun visors, lighted vanity mirror wire connector, if so equipped, and screws attaching sun visors to roof header panel.

LOWER QUARTER TRIM PANEL

REMOVAL

(1) Remove upper quarter trim panel (Fig. 9).
(2) Disengage clips attaching trim to lower quarter trim panel.
(3) Remove cargo tie down trim panel.
(4) Remove lower quarter trim from vehicle.

INSTALLATION

(1) Position lower quarter trim panel to vehicle (Fig. 9) .
(2) Align locating pins on backside of trim panel to mating holes in inner quarter panel.
(3) Press clips on trim panel into slots in inner quarter panel.
(4) Install upper quarter trim panel.

LOWER QUARTER TRIM PANEL (Continued)

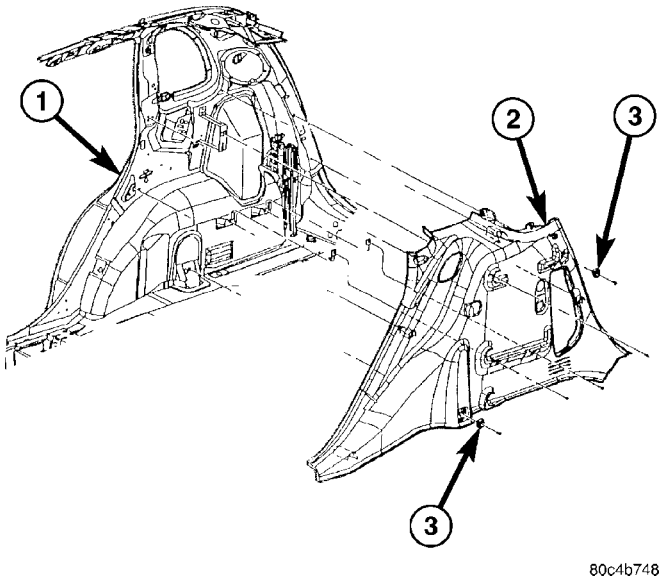

Fig. 9 LOWER QUARTER TRIM PANEL

1 - REAR QUARTER PANEL
2 - REAR QUARTER TRIM PANEL
3 - CARGO TIE DOWN QUARTER TRIM LOWER LOOP

INSIDE REAR VIEW MIRROR

REMOVAL

(1) Loosen the mirror base set screw (Fig. 10).
(2) Slide the mirror base upward and off the bracket.

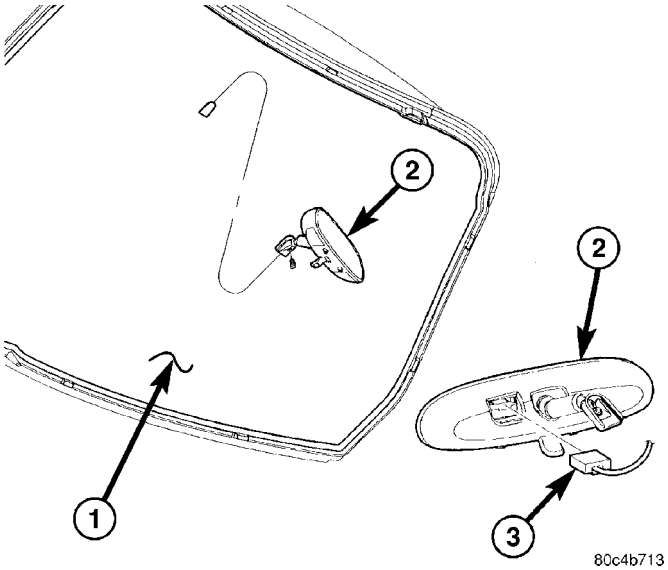

Fig. 10 REAR VIEW MIRROR

1 - WINDSHIELD
2 - REAR VIEW MIRROR
3 - REAR VIEW MIRROR CONNECTOR

INSTALLATION

(1) Position the mirror base at the bracket and slide it downward onto the support bracket (Fig. 10) .
(2) Tighten the setscrew 1 N·m (15 in. lbs.) torque.

SUN VISOR

REMOVAL

WARNING: ALL VEHICLES WITH DRIVER AND PASSENGER SIDE AIRBAGS MUST HAVE A COLORED CODED FIVE BULLET POINT AIRBAG WARNING LABEL APPLIED TO THE SUN VISOR, VERIFY LABEL AVAILABILITY AND ENSURE THE LABEL IS INSTALLED.

(1) Remove sun visor from center support.
(2) Remove screws attaching sun visor to roof header.
(3) Remove sun visor from header.
(4) If equipped, disconnect wire connector from body harness.
(5) Remove sun visor from vehicle.

INSTALLATION

WARNING: ALL VEHICLES WITH DRIVER AND PASSENGER SIDE AIRBAGS MUST HAVE A COLORED CODED FIVE BULLET POINT AIRBAG WARNING LABEL APPLIED TO THE SUN VISOR, VERIFY LABEL AVAILABILITY AND ENSURE THE LABEL IS INSTALLED.

(1) Place sun visor in position.
(2) If equipped, connect wire connector from body harness.
(3) Install screws attaching sun visor to header.
(4) Install sun visor into center support.

PAINT

TABLE OF CONTENTS

page

PAINT
SPECIFICATIONS - COLOR CODES 66
BASECOAT/CLEARCOAT FINISH
DESCRIPTION 66
PAINT CODE
DESCRIPTION 66
PAINT TOUCH-UP
DESCRIPTION 67
FINESSE SANDING/BUFFING & POLISHING
DESCRIPTION 67

PAINT

SPECIFICATIONS - COLOR CODES

EXTERIOR COLORS

EXTERIOR COLOR	DAIMLERCHRYSLER CODE	EXTERIOR COLOR	DAIMLERCHRYSLER CODE
BLACK CLEARCOAT	DX8	LIGHT ALMOND PEARL METALLIC CLEARCOAT	ZKJ
BRIGHT SILVER METALLIC CLEARCOAT	WS2	PATRIOT BLUE PEARLCOAT	WB7
DARK CRANBERRY RED PEARLCOAT	VMT	STEEL BLUE PEARLCOAT	XBQ
ONYX GREEN PEARLCOAT	YJR	STONE WHITE CLEARCOAT	SW1
INFERNO RED TINTED PEARLCOAT	WEL	ELECTRIC BLUE PEARLCOAT	AB5

INTERIOR COLORS

INTERIOR COLOR	DAIMLERCHRYSLER COLOR CODE
LIGHT PEARL BEIGE/DARK TAUPE	N
DARK SLATE GRAY	S

BASECOAT/CLEARCOAT FINISH

DESCRIPTION

On most vehicles a two-part paint application (basecoat/clearcoat) is used. Color paint that is applied to primer is called basecoat. The clearcoat protects the basecoat from ultraviolet light and provides a durable high-gloss finish.

CAUTION: Do not use abrasive chemicals or compounds on painted surfaces. Damage to finish can result.

Do not use harsh alkaline based cleaning solvents on painted surfaces. Damage to finish or color can result.

PAINT CODE

DESCRIPTION

Exterior vehicle body colors are identified on the Body Code plate. (Refer to VEHICLE DATA/VEHICLE INFORMATION/BODY CODE PLATE - DESCRIPTION). The paint code is also identified on the Vehicle Safety Certification Label which is located on the drivers door shut face. The first digit

PAINT CODE (Continued)

of the paint code listed on the vehicle indicates the sequence of application, i.e.: P = primary coat, Q = secondary coat. The codes listed in the Color Code Chart are used for manufacturing purposes.

PAINT TOUCH-UP

DESCRIPTION

When a painted metal surface has been scratched or chipped, it should be touched up as soon as possible to avoid corrosion. For best results, use Mopar® Scratch Filler/Primer, Touch Up Paints and Clear Top Coat. (Refer to VEHICLE DATA/VEHICLE INFORMATION/BODY CODE PLATE - DESCRIPTION).

WARNING: USE A OSHA APPROVED RESPIRATOR AND SAFETY GLASSES WHEN SPRAYING PAINT OR SOLVENTS IN A CONFINED AREA. PERSONAL INJURY CAN RESULT.

TOUCH UP PROCEDURE

(1) Scrape loose paint and corrosion from inside scratch or chip.

(2) Clean affected area with Mopar® Tar/Road Oil Remover, and allow to dry.

(3) Fill the inside of the scratch or chip with a coat of filler/primer. Do not overlap primer onto good surface finish. The applicator brush should be wet enough to puddle-fill the scratch or chip without running. Do not stroke brush applicator on body surface. Allow the filler/primer to dry hard.

(4) Cover the filler/primer with color touch up paint. Do not overlap touch up color onto the original color coat around the scratch or chip. Butt the new color to the original color, if possible. Do not stroke applicator brush on body surface. Allow touch up paint to dry hard.

(5) On vehicles without clearcoat, the touch up color can be lightly finesse sanded (1500 grit) and polished with rubbing compound.

(6) On vehicles with clearcoat, apply clear top coat to touch up paint with the same technique as described in Step 4. Allow clear top coat to dry hard. If desired, Step 5 can be performed on clear top coat.

WARNING: AVOID PROLONGED SKIN CONTACT WITH PETROLEUM OR ALCOHOL – BASED CLEANING SOLVENTS. PERSONAL INJURY CAN RESULT.

FINESSE SANDING/BUFFING & POLISHING

DESCRIPTION

Minor acid etching, orange peel, or smudging in clearcoat or single-stage finishes can be reduced with light finesse sanding, hand buffing, and polishing. **If the finish has been finesse sanded in the past, it cannot be repeated. Finesse sanding operation should be performed by a trained automotive paint technician.**

CAUTION: Do not remove clearcoat finish, if equipped. Basecoat paint must retain clearcoat for durability.

SEATS

TABLE OF CONTENTS

	page
FRONT SEAT	
REMOVAL	68
INSTALLATION	68
FRONT SEAT BACK	
REMOVAL	69
INSTALLATION	69
FRONT SEAT BACK COVER	
REMOVAL	69
INSTALLATION	69
FRONT SEAT CUSHION	
REMOVAL	70
INSTALLATION	70
FRONT SEAT CUSHION COVER	
REMOVAL	70
INSTALLATION	70
FRONT SEAT HEAD RESTRAINT	
REMOVAL	70
INSTALLATION	70
REAR SEAT	
REMOVAL	70
INSTALLATION	70
REAR SEAT BACK	
REMOVAL	71
INSTALLATION	71
REAR SEAT BACK COVER	
REMOVAL	71
INSTALLATION	71
REAR SEAT CUSHION	
REMOVAL	71
INSTALLATION	71
REAR SEAT BACK CUSHION / COVER	
REMOVAL	71
INSTALLATION	72
UNDER SEAT STORAGE BIN	
REMOVAL	72
INSTALLATION	72
REAR SEAT PIVOT BEZEL	
REMOVAL	72
INSTALLATION	72
CHILD SEAT TETHER ANCHOR BEZEL	
REMOVAL	73
INSTALLATION	73

FRONT SEAT

REMOVAL

WARNING: BEFORE SERVICING THE SEAT THE AIRBAG SYSTEM MUST BE DISARMED. FAILURE TO DO SO MAY RESULT IN ACCIDENTAL DEPLOYMENT OF THE AIRBAG AND POSSIBLE PERSONAL INJURY. REFER TO RESTRAINT SYSTEMS FOR SERVICE PROCEDURES.

(1) Move seat to forward position.
(2) Remove bolts attaching rear of the seat track.
(3) Move seat to rearward position.
(4) Remove bolts attaching front of seat track to floor (Fig. 1).
(5) Disengage electrical connectors, if equipped.
(6) Remove seat from vehicle.

INSTALLATION

WARNING: BEFORE SERVICING THE SEAT THE AIRBAG SYSTEM MUST BE DISARMED. FAILURE TO DO SO MAY RESULT IN ACCIDENTAL DEPLOYMENT OF THE AIRBAG AND POSSIBLE PERSONAL INJURY. REFER TO RESTRAINT SYSTEMS FOR SERVICE PROCEDURES.

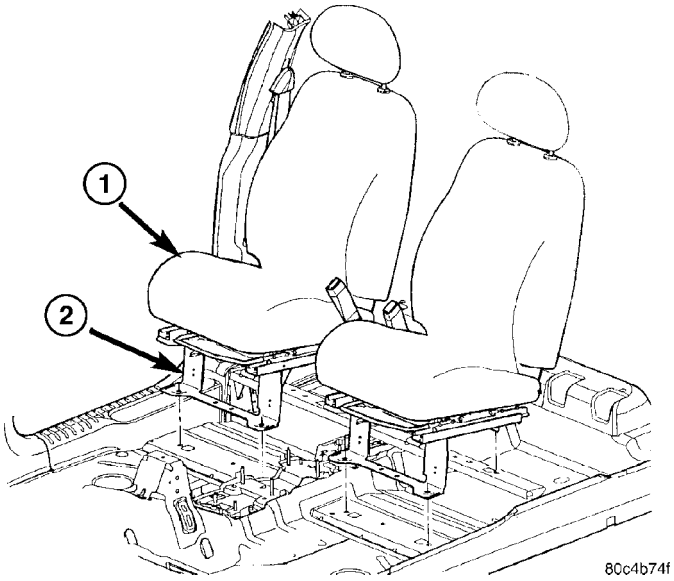

Fig. 1 FRONT SEAT

1 - FRONT SEAT ASSEMBLY
2 - FRONT SEAT RISER

(1) Place seat into position in vehicle. Do not use the head restraint, side shield, recliner handle, or the adjuster lift bar to move the seat (Fig. 1).
(2) Engage electrical connectors, if equipped.

FRONT SEAT (Continued)

(3) Install bolts attaching seat track to floor cross-member. Tighten front seat bolt to 55 N·m (40 ft. lbs.) torque.

(4) Install rear seat track attaching bolts. Tighten rear seat bolts to 55 N·m (40 ft. lbs.) torque.

FRONT SEAT BACK

REMOVAL

WARNING: BEFORE SERVICING THE SEAT BACK THE AIRBAG SYSTEM MUST BE DISARMED. FAILURE TO DO SO MAY RESULT IN ACCIDENTAL DEPLOYMENT OF THE AIRBAG AND POSSIBLE PERSONAL INJURY. REFER TO RESTRAINT SYSTEMS FOR SERVICE PROCEDURES.

CAUTION: Do not reuse the recliner assembly attaching bolts.

(1) Remove seat from vehicle.

(2) Remove seat cushion side shields.

(3) Remove bolts attaching recliner to seat back cushion frame.

(4) Remove inboard pivot bolt.

(5) Disconnect any electrical connectors to the seat back, if equipped.

(6) Remove seat back from seat cushion.

INSTALLATION

WARNING: BEFORE SERVICING THE SEAT BACK THE AIRBAG SYSTEM MUST BE DISARMED. FAILURE TO DO SO MAY RESULT IN ACCIDENTAL DEPLOYMENT OF THE AIRBAG AND POSSIBLE PERSONAL INJURY. REFER TO RESTRAINT SYSTEMS FOR SERVICE PROCEDURES.

CAUTION: Do not reuse the recliner assembly attaching bolts.

(1) Position seat back on cushion.

(2) Connect electrical connectors to the seat back, if equipped.

(3) Install inboard pivot bolt. Tighten bolt to 40 N·m (30 ft. lbs.) torque.

(4) Install bolts attaching recliner to seat cushion frame. Tighten bolts to 12 N·m (9 ft. lbs.) torque.

(5) Install seat cushion side shields.

(6) Install seat in vehicle.

FRONT SEAT BACK COVER

REMOVAL

WARNING: BEFORE SERVICING THE SEAT BACK COVER THE AIRBAG SYSTEM MUST BE DISARMED. FAILURE TO DO SO MAY RESULT IN ACCIDENTAL DEPLOYMENT OF THE AIRBAG AND POSSIBLE PERSONAL INJURY. REFER TO RESTRAINT SYSTEMS FOR SERVICE PROCEDURES.

(1) Remove seat from vehicle.

(2) Remove head restraint.

(3) Remove front seat back.

(4) Disengage the J-strap retainer.

(5) Roll cover upward to hog rings. Cut hog rings to free cover (Fig. 2).

(6) Roll cover to top of seat back and remove head restraint sleeve guides.

(7) Remove cover from seat back.

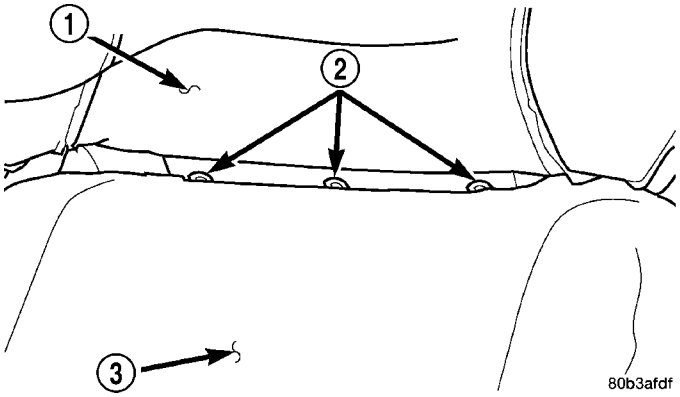

Fig. 2 FRONT SEAT BACK HOG RINGS

1 - SEAT COVER
2 - HOG RINGS
3 - CUSHION

INSTALLATION

WARNING: BEFORE SERVICING THE SEAT BACK COVER THE AIRBAG SYSTEM MUST BE DISARMED. FAILURE TO DO SO MAY RESULT IN ACCIDENTAL DEPLOYMENT OF THE AIRBAG AND POSSIBLE PERSONAL INJURY. REFER TO RESTRAINT SYSTEMS FOR SERVICE PROCEDURES.

CAUTION: Do not reuse the recliner assembly attaching bolts.

(1) Position cover at the top of seat back.

(2) Carefully roll cover down to the area that hog rings are to be installed (Fig. 2) .

(3) Install hog rings.

FRONT SEAT BACK COVER (Continued)

(4) Roll cover downward.
(5) Engage the J-strap retainer
(6) Install new head restraint sleeve guides.
(7) Install seat back to seat cushion. Tighten bolts to 40 N·m (30 ft. lbs.) torque.
(8) Install seat in vehicle.
(9) Install head restraint.
(10) Check seat back and headrest operation.

FRONT SEAT CUSHION

REMOVAL

(1) Disengage electrical connectors, if equipped.
(2) Remove seat from vehicle.
(3) Remove front seat cushion side shield.
(4) Remove seat back.
(5) Remove track and recliner assembly.
(6) Disengage electrical connectors for heated seat element, if equipped. Remove seat cushion (Fig. 3) .

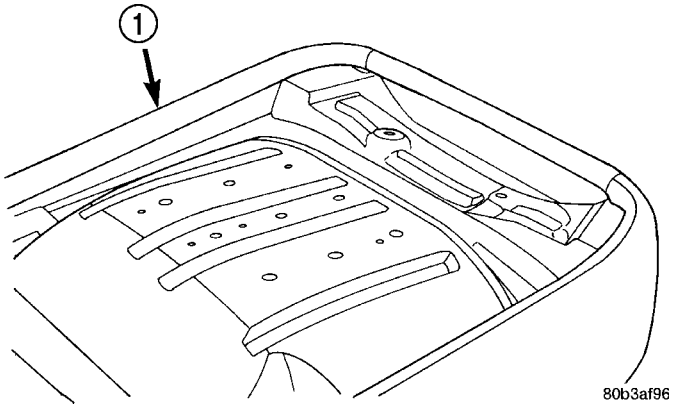

Fig. 3 Front Seat Cushion

1 - FRONT SEAT CUSHION

INSTALLATION

(1) Connect seat cushion heater element connector, if equipped. Install seat cushion (Fig. 3).
(2) Install track and recliner assembly. Tighten bolts to 12 N·m (9 ft. lbs.) torque.
(3) Install seat back. Tighten bolts to 40 N·m (30 ft. lbs.) torque.
(4) Install cushion side shields.
(5) Install seat in vehicle.

FRONT SEAT CUSHION COVER

REMOVAL

(1) Remove seat from vehicle.
(2) Remove front seat cushion side shields.
(3) Remove seat back.
(4) Remove track and recliner assembly.
(5) Disengage J-strap attaching seat cover from the seat cushion frame.
(6) Pull cover off to the hog rings.
(7) Cut hog rings attaching seat cover to seat cushion pad.
(8) Remove seat cushion cover from seat cushion.

INSTALLATION

(1) Position seat cover on cushion.
(2) Align seat cover with cushion alignment indentations.
(3) Install hog rings.
(4) Engage J-strap attaching seat cover to front of seat cushion frame.
(5) Install track and recliner assembly. Tighten front track to pan bolts to 12 N·m (9 ft. lbs.) torque.
(6) Install seat back.
(7) Install front seat cushion side shields.
(8) Install seat in vehicle.

FRONT SEAT HEAD RESTRAINT

REMOVAL

(1) Raise head restraint slightly.
(2) Insert a stiff wire into the hole on the right hand side head restraint sleeve/guide and push to release latch.
(3) At the same time, press the button on the head restraint sleeve/guide left hand side and pull upward to release the head restraint.
(4) Remove head restraint from seat back.

INSTALLATION

(1) Place head restraint in position.
(2) Push head restraint down into the lock position.
(3) Raise head restraint to ensure it locks at the last stop.

REAR SEAT

REMOVAL

(1) Fold seat back down and then roll forward to access disengage hooks (Fig. 4).
(2) Disengage hooks and remove seat from vehicle.

INSTALLATION

(1) Place rear seat back into position in vehicle (Fig. 4) .
(2) Push seat downward to engage hooks.

REAR SEAT (Continued)

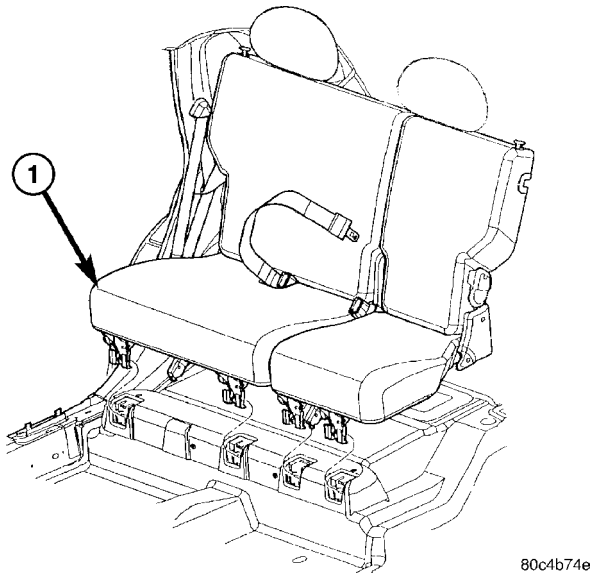

Fig. 4 REAR SEAT

1 - REAR SEAT

REAR SEAT BACK

REMOVAL

(1) Remove seat from vehicle.
(2) Remove seat cushion side shields.
(3) Remove bolts attaching recliner to seat back cushion frame.
(4) Remove inboard pivot bolt.
(5) Remove seat back from seat cushion.

INSTALLATION

(1) Position seat back on cushion.
(2) Install inboard pivot bolt. Tighten bolt to 40 N·m (30 ft. lbs.) torque.
(3) Install bolts attaching recliner to seat cushion frame. Tighten bolts to 12 N·m (9 ft. lbs.) torque.
(4) Install rear seat cushion side shields.
(5) Install seat in vehicle.

REAR SEAT BACK COVER

REMOVAL

(1) Remove seat from vehicle.
(2) Remove head restraint.
(3) Remove rear seat back.
(4) Disengage the J-strap retainer.
(5) Roll cover upward to hog rings. Cut hog rings to free cover.
(6) Roll cover to top of seat back and remove head restraint sleeve guides.
(7) Remove cover from seat back.

INSTALLATION

(1) Position cover at the top of seat back.
(2) Carefully roll cover down to the area that hog rings are to be installed.
(3) Install hog rings.
(4) Roll cover downward.
(5) Engage the J-strap retainer
(6) Install new head restraint sleeve guides.
(7) Install seat back to seat cushion. Tighten bolts to 40 N·m (30 ft. lbs.) torque.
(8) Install seat in vehicle.
(9) Install head restraint.
(10) Check seat back and headrest operation.

REAR SEAT CUSHION

REMOVAL

(1) Remove seat from vehicle.
(2) Remove rear seat cushion side shields.
(3) Remove seat back.
(4) Remove rear seat and track assembly.
(5) Disengage J-strap attaching seat cover from the seat cushion frame.
(6) Pull cover off to the hog rings.
(7) Cut hog rings attaching seat cover to seat cushion pad.
(8) Remove seat cushion cover from seat cushion.

INSTALLATION

(1) Position seat cover on cushion.
(2) Align seat cover with cushion alignment indentations.
(3) Install hog rings.
(4) Engage J-strap attaching seat cover to cushion frame.
(5) Install rear seat and track assembly. Tighten front track to pan bolts to 12 N·m (9 ft. lbs.) torque.
(6) Install seat back.
(7) Install rear seat cushion side shields.
(8) Install seat in vehicle.

REAR SEAT BACK CUSHION / COVER

REMOVAL

(1) Remove seat from vehicle.
(2) Remove rear seat cushion side shields.
(3) Remove seat back.
(4) Remove track assembly.
(5) Disengage J-strap attaching seat cover from the seat cushion frame.
(6) Pull cover off to the hog rings.
(7) Cut hog rings attaching seat cover to seat cushion pad.

REAR SEAT BACK CUSHION / COVER (Continued)

(8) Remove seat cushion cover from seat cushion.

INSTALLATION

(1) Position seat cover on cushion.
(2) Align seat cover with cushion alignment indentations.
(3) Install hog rings.
(4) Engage J-strap attaching seat cover to front of seat cushion frame.
(5) Install track assembly. Tighten front track to pan bolts to 12 N·m (9 ft. lbs.) torque.
(6) Install seat back.
(7) Install rear seat cushion side shields.
(8) Install seat in vehicle.

UNDER SEAT STORAGE BIN

REMOVAL

(1) Open cargo bin.
(2) Pull cargo bin out until it reaches the end of the guide (Fig. 5).
(3) Lift upward on cargo bin and remove.

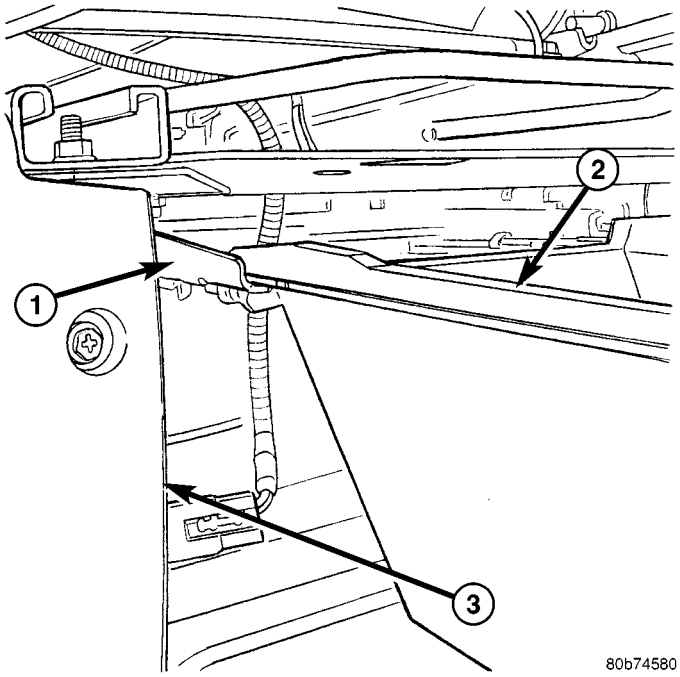

Fig. 5 CARGO BIN

1 - CARGO BIN TRACK
2 - CARGO BIN
3 - SEAT TRIM

INSTALLATION

(1) Position cargo bin into cargo bin guides.
(2) Lift upward on front of cargo bin to engage cargo bin stop.
(3) Slide cargo bin to the fully closed position (Fig. 6).

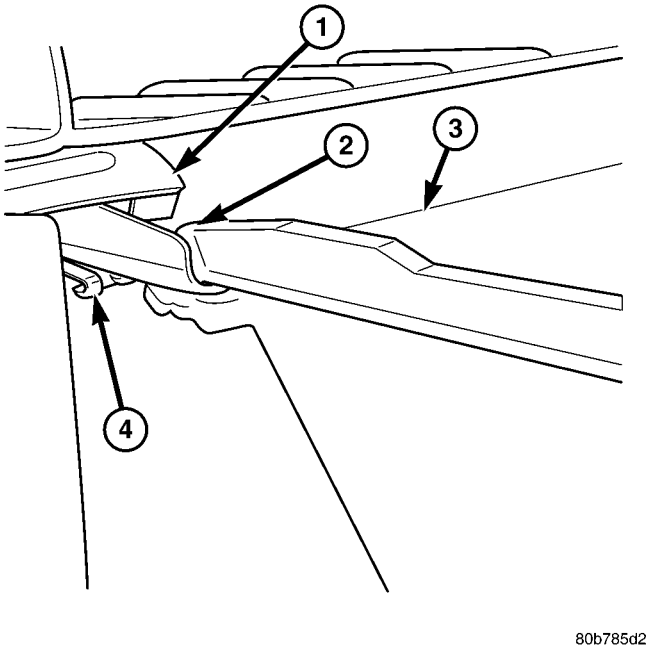

Fig. 6 CARGO BIN GUIDE

1 - CARGO BIN STOP - SEAT SIDE
2 - CARGO BIN STOP - CARGO BIN SIDE
3 - CARGO BIN
4 - CARGO BIN GUIDE

REAR SEAT PIVOT BEZEL

REMOVAL

(1) Fold the rear seats forward.
(2) Remove the seat to access the proper bezel.
(3) Using a trim stick, to disengage bezel(s).
(4) Remove bezel from vehicle.

INSTALLATION

(1) Place bezel(s) into position.
(2) Press down to engage bezel(s) into position.
(3) Install rear seat(s).
(4) Place rear seats into position.

CHILD SEAT TETHER ANCHOR BEZEL

REMOVAL

(1) Lay rear seat back down (Fig. 7).

(2) Remove screws attaching Child Tether anchor bezel.

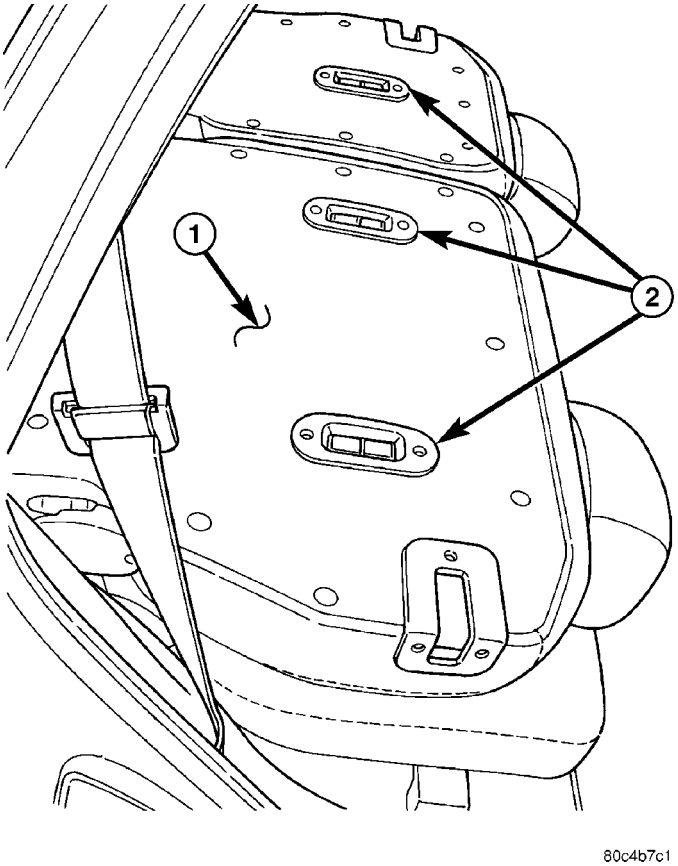

Fig. 7 CHILD TETHER ANCHOR BEZEL

1 - REAR SEAT BACK
2 - CHILD TETHER ANCHOR BEZEL

INSTALLATION

(1) Place Child Tether anchor bezel in position (Fig. 7) .

(2) Install screws attaching bezels.

STATIONARY GLASS

TABLE OF CONTENTS

	page
BACKLITE	
REMOVAL	74
INSTALLATION	74
QUARTER WINDOW	
REMOVAL	76
INSTALLATION	76
WINDSHIELD	
DESCRIPTION	77
WARNING	
WINDSHIELD SAFETY PRECAUTIONS	78
REMOVAL	
REMOVAL - EXTERIOR METHOD	78
REMOVAL - INTERIOR METHOD	78
INSTALLATION	79

BACKLITE

REMOVAL

WARNING: DO NOT OPERATE THE VEHICLE WITHIN 24 HOURS OF WINDSHIELD INSTALLATION. IT TAKES AT LEAST 24 HOURS FOR URETHANE ADHESIVE TO CURE. IF IT IS NOT CURED, THE WINDSHIELD MAY NOT PERFORM PROPERLY IN AN ACCIDENT. BE SURE TO REFER TO THE URETHANE MANUFACTURER'S DIRECTIONS FOR CURING TIME SPECIFICATIONS, AND DO NOT USE ADHESIVE AFTER ITS EXPIRATION DATE.
CAUTION: Open the left front door glass before installing the rear window to avoid pressurizing the passenger compartment if a door is slammed before the urethane bonding is fully cured. Water leaks can result

Refer to the Windshield Removal procedure for a description of tools and adhesive systems that are recommended for use in this procedure.

(1) Remove liftgate trim panels (Fig. 1).

(2) Disconnect wire connectors from rear window defogger (Fig. 2)

(3) Disconnect and remove CHMSL lamp.

WARNING: WEAR EYE AND HAND PROTECTION WHEN HANDLING SAFETY GLASS. PERSONAL INJURY CAN RESULT.

CAUTION: Do not damage body or trim finish when cutting out glass or applying fence primer.

(4) Cut the urethane around the perimeter of the rear window glass. Refer to Windshield for proper procedures.

(5) Remove the rear window from the vehicle.

(6) Prepare the work area, window fence, and glass the same way as described in the Windshield Installation procedure.

INSTALLATION

WARNING: DO NOT OPERATE THE VEHICLE WITHIN 24 HOURS OF WINDSHIELD INSTALLATION. IT TAKES AT LEAST 24 HOURS FOR URETHANE ADHESIVE TO CURE. IF IT IS NOT CURED, THE WINDSHIELD MAY NOT PERFORM PROPERLY IN AN ACCIDENT. BE SURE TO REFER TO THE URETHANE MANUFACTURER'S DIRECTIONS FOR CURING TIME SPECIFICATIONS, AND DO NOT USE ADHESIVE AFTER ITS EXPIRATION DATE.

CAUTION: OPEN THE LEFT FRONT DOOR GLASS BEFORE INSTALLING THE REAR WINDOW TO AVOID PRESSURIZING THE PASSENGER COMPARTMENT IF A DOOR IS SLAMMED BEFORE THE URETHANE BONDING IS FULLY CURED. WATER LEAKS CAN RESULT.

Refer to the Windshield Removal procedure for a description of tools and adhesive systems that are recommended for use in this procedure.

(1) Install the Liftgate window molding on glass.

(2) Apply a 10 mm (0.4 in.) bead of urethane around the perimeter of the glass.

(3) Place liftgate window glass into position (Fig. 3)

(4) Install the glass in the same manner described in the Windshield Install.

(5) Connect rear window defogger wiring (Fig. 2)

(6) After urethane has cured, water test rear window to verify repair. Verify rear window defogger operation.

(7) Install and connect the CHMSL lamp.

(8) Install liftgate trim panels (Fig. 1).

BACKLITE (Continued)

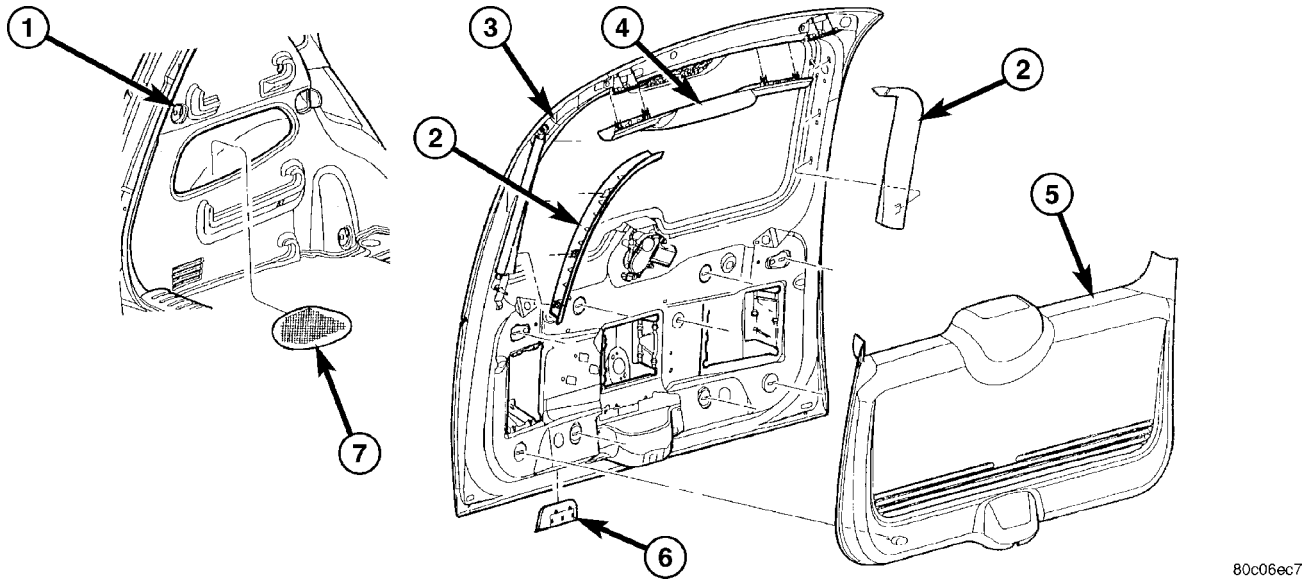

Fig. 1 LIFTGATE TRIM PANELS

1 - EDGE OF LIFTGATE TROUGH
2 - LIFTGATE HALO
3 - LIFTGATE
4 - CHMSL COVER TRIM
5 - LIFTGATE TRIM PANEL
6 - LIFTGATE PULL CUP
7 - REAR CONVENIENCE BEZEL

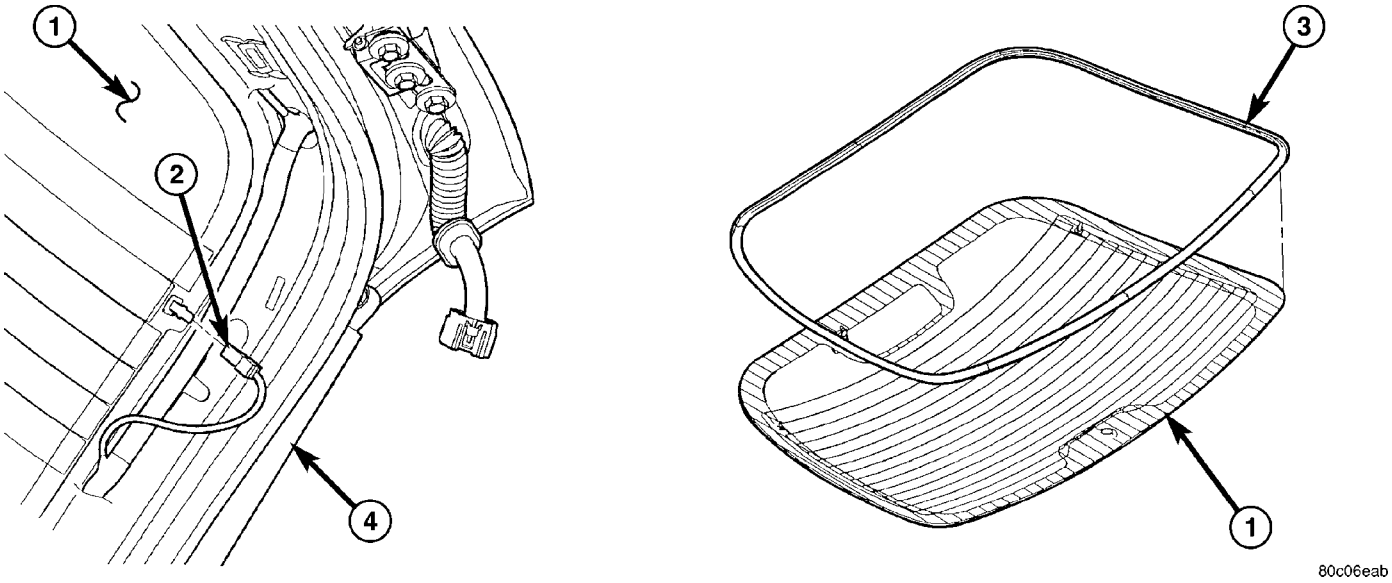

Fig. 2 REAR WINDOW GLASS

1 - LIFTGATE WINDOW GLASS
2 - REAR WINDOW DEFOGGER CONNECTOR
3 - LIFTGATE GLASS MOLDING
4 - LIFTGATE INNER PANEL

BACKLITE (Continued)

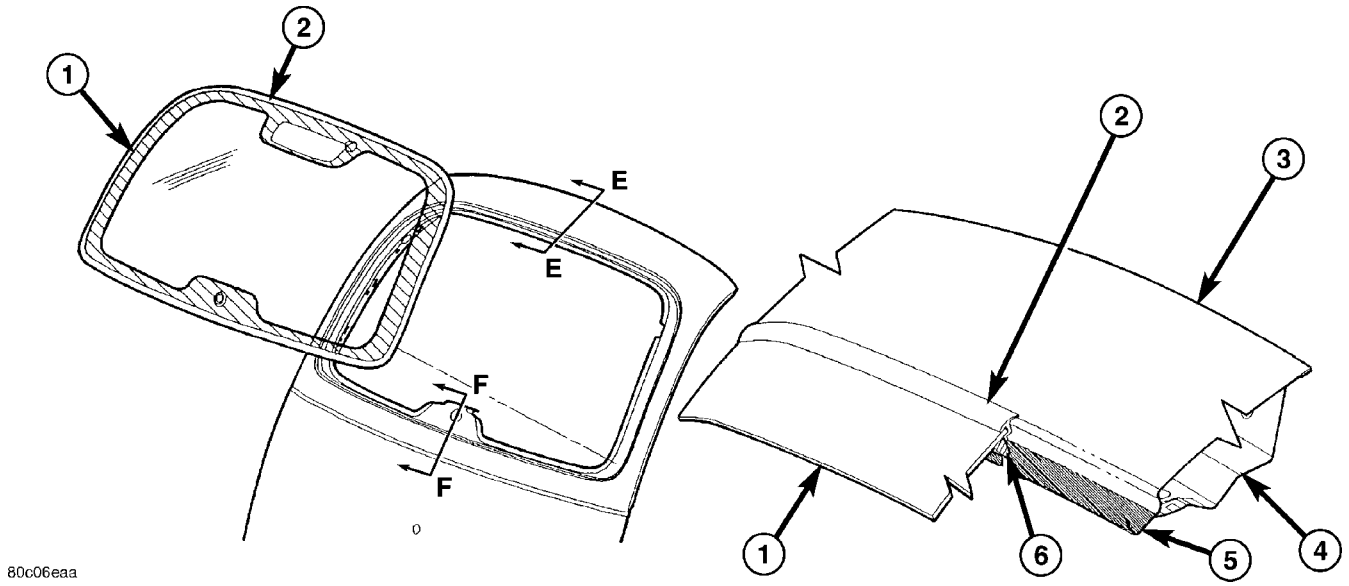

Fig. 3 LIFTGATE WINDOW GLASS INSTALLATION

1 - LIFTGATE WINDOW GLASS
2 - LIFTGATE GLASS MOLDING
3 - LIFTGATE OUTER PANEL
4 - LIFTGATE INNER PANEL
5 - CLEAN WITH VM & P NAPTHA & PRIMER BLACK OUT GLASS PAINT
6 - HIGH VISCOSITY ADHESIVE

QUARTER WINDOW

REMOVAL

Refer to the Windshield Removal procedure for a description of tools and adhesive systems that are recommended for use in this procedure.

(1) Open liftgate

(2) Remove C & D Pillar upper trim panel (Fig. 4).

(3) Remove lower quarter trim panel as necessary (Fig. 5).

(4) Remove nuts attaching quarter window glass. (Fig. 6).

WARNING: WEAR EYE AND HAND PROTECTION WHEN HANDLING SAFETY GLASS. PERSONAL INJURY CAN RESULT.

CAUTION: Do not damage body or trim finish when cutting out glass or applying fence primer.

(5) Remove the quarter window glass from the vehicle by pushing on glass from inside of vehicle.

INSTALLATION

(1) Prepare window fence by removing existing butyl.

(2) Remove butyl release paper on quarter glass.

(3) Place quarter window glass into position.

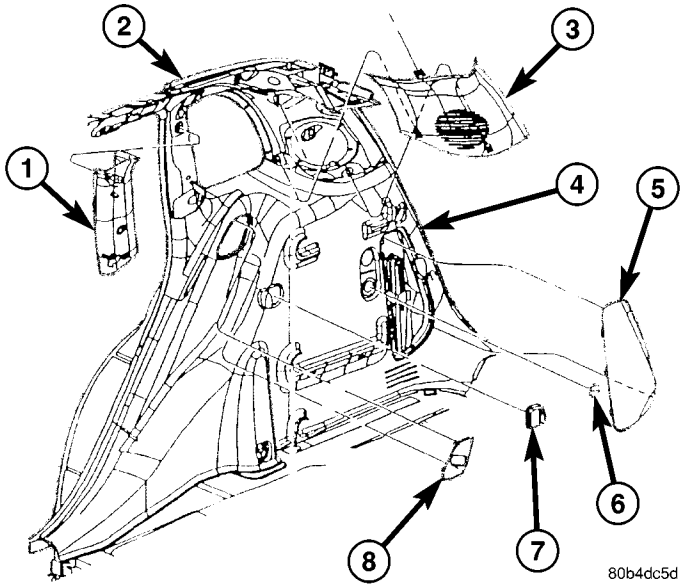

Fig. 4 QUARTER TRIM PANEL

1 - C-PILLAR UPPER TRIM PANEL
2 - REAR QUARTER PANEL
3 - D-PILLAR UPPER TRIM PANEL
4 - QUARTER LOWER TRIM PANEL
5 - JACK STORAGE ACCESS DOOR
6 - QUARTER TRIM PANEL LOWER PLUG
7 - VERTICAL BUMPER
8 - SEAT LATCH STRIKER COVER

QUARTER WINDOW (Continued)

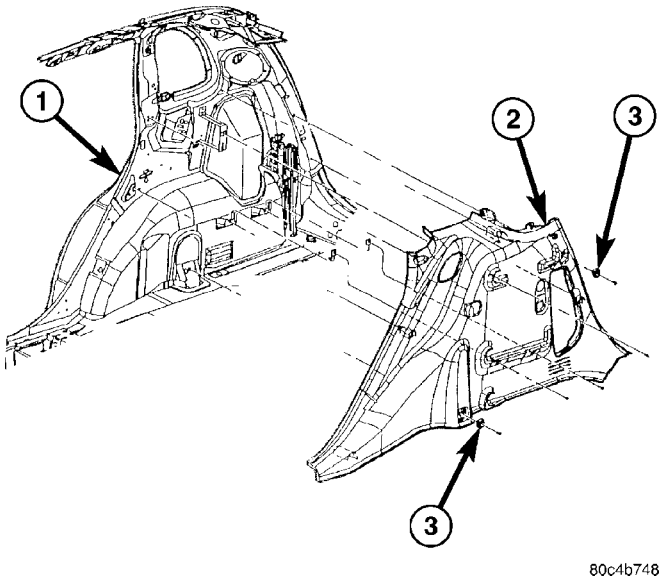

Fig. 5 LOWER QUARTER TRIM

1 - REAR QUARTER PANEL
2 - REAR QUARTER TRIM PANEL
3 - CARGO TIE DOWN QUARTER TRIM LOWER LOOP

(4) Install quarter window glass attaching nuts.

(5) Water test quarter window glass to verify repair.

(6) Install lower quarter trim, and C& D-Pillar trim (Fig. 4) and (Fig. 5).

(7) Close liftgate.

WINDSHIELD

DESCRIPTION

Windshields are made of two pieces of glass with a plastic inner layer. Windshields and selected stationary glass are structural members of the vehicle. The windshield glass is bonded to the windshield frame with urethane adhesive.

Windshields and other stationary glass protect the occupants from the effects of the elements. Windshields are also used to retain some airbags in position during deployment.

The windshield is attached to the window frame with urethane adhesive. The urethane adhesive is applied cold and seals the surface area between the window opening and the glass. The primer adheres the urethane adhesive to the windshield.

It is difficult to salvage a windshield during the removal operation. The windshield is part of the structural support for the roof. The urethane bonding used to secure the windshield to the fence is difficult to cut or clean from any surface. If the moldings are set in urethane, it would also be unlikely they could be salvaged. Before removing the windshield, check the availability of the windshield and moldings from the parts supplier.

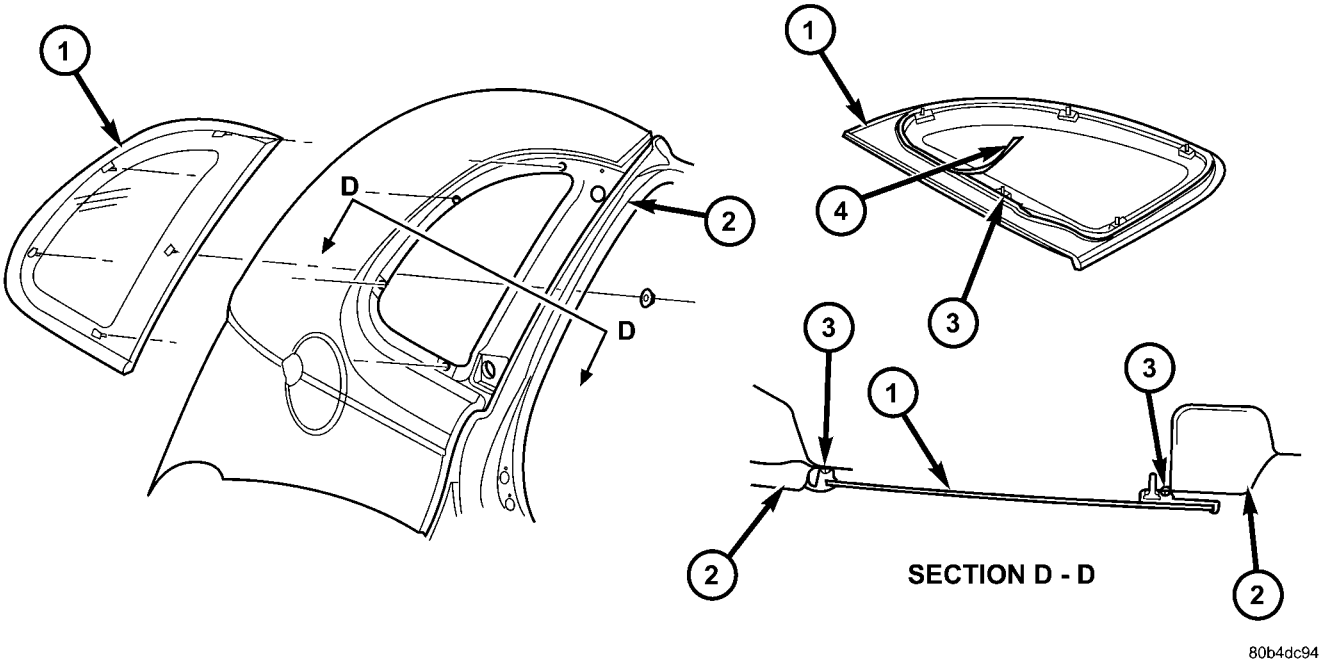

Fig. 6 QUARTER WINDOW GLASS

1 - QUARTER WINDOW GLASS
2 - C-PILLAR
3 - BUTYL
4 - BUTYL RELEASE PAPER

WINDSHIELD (Continued)

RECOMMENDED TOOLS AND ADHESIVE

- Fein® Power Cutout Knife
- Equalizer® Magnum, Interior Auto Glass Cut Out Knife

ADHESIVE, PRIMER AND CLEANER

The urethane adhesive holding the windshield to the opening pinch weld (fence) can be cut using a sharp cold knife from the exterior of the vehicle. Using the cold knife method is effective if the windshield is already broken. If the glass must be salvaged, cutting the urethane adhesive from the interior of the vehicle using a reciprocating or oscillating power knife is recommended.

RECOMMENDED TOOLS AND ADHESIVE

The following urethane adhesive systems are OEM certified and conform to the FMVSS 212 windshield retention standard and the FMVSS 216 roof crush standard.

WARNING

WINDSHIELD SAFETY PRECAUTIONS

WARNING: DO NOT OPERATE THE VEHICLE WITHIN 24 HOURS OF WINDSHIELD INSTALLATION. IT TAKES AT LEAST 24 HOURS FOR URETHANE ADHESIVE TO CURE. IF IT IS NOT CURED, THE WINDSHIELD MAY NOT PERFORM PROPERLY IN AN ACCIDENT.
URETHANE ADHESIVES ARE APPLIED AS A SYSTEM. USE GLASS CLEANER, GLASS PREP SOLVENT, GLASS PRIMER, AND PINCH WELD (FENCE) PRIMER PROVIDED BY THE ADHESIVE MANUFACTURER. IF NOT, STRUCTURAL INTEGRITY COULD BE COMPROMISED.
DAIMLERCHRYSLER DOES NOT RECOMMEND GLASS ADHESIVE BY BRAND. TECHNICIANS SHOULD REVIEW PRODUCT LABELS AND TECHNICAL DATA SHEETS, AND USE ONLY ADHESIVES THAT THEIR MANUFACTURES WARRANT WILL RESTORE A VEHICLE TO THE REQUIREMENTS OF FMVSS 212. TECHNICIANS SHOULD ALSO INSURE THAT PRIMERS AND CLEANERS ARE COMPATIBLE WITH THE PARTICULAR ADHESIVE USED.
BE SURE TO REFER TO THE URETHANE MANUFACTURER'S DIRECTIONS FOR CURING TIME SPECIFICATIONS, AND DO NOT USE ADHESIVE AFTER ITS EXPIRATION DATE.
VAPORS THAT ARE EMITTED FROM THE URETHANE ADHESIVE OR PRIMER COULD CAUSE PERSONAL INJURY. USE THEM IN A WELL-VENTILATED AREA.
SKIN CONTACT WITH URETHANE ADHESIVE SHOULD BE AVOIDED. PERSONAL INJURY MAY RESULT.
ALWAYS WEAR EYE AND HAND PROTECTION WHEN WORKING WITH GLASS.

CAUTION: Protect all painted and trimmed surfaces from coming in contact with urethane or primers. Be careful not to damage painted surfaces when removing moldings or cutting urethane around windshield.

REMOVAL

REMOVAL - EXTERIOR METHOD

The urethane adhesive holding the windshield to the opening pinch weld (fence) can be cut using a sharp cold knife from the exterior of the vehicle. Using the cold knife method is effective if the windshield is already broken. If the glass must be salvaged, cutting the urethane adhesive from the interior of the vehicle using a reciprocating or oscillating power knife is recommended.

(1) Remove inside rear view mirror.
(2) Remove windshield wiper arms.
(3) Remove cowl cover.
(4) Place protective covers over instrument panel and hood.
(5) Remove windshield A-pillar trim.
(6) Using a sharp cold knife, cut urethane adhesive holding the windshield to the A-pillars, roof header and cowl pinch weld fences (Fig. 7). A power cutting device can be used if available.
(7) Remove windshield from vehicle.

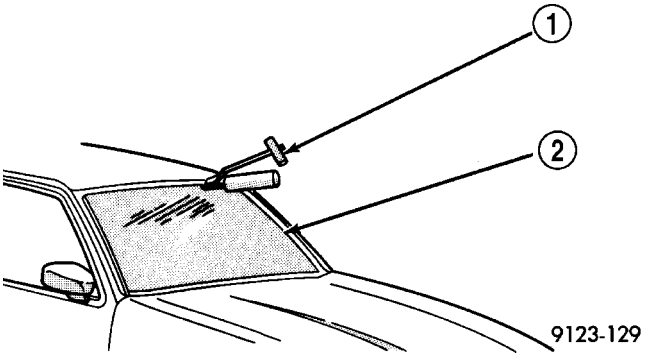

Fig. 7 CUT URETHANE AROUND WINDSHIELD

1 - COLD KNIFE
2 - WINDSHIELD ASSEMBLY WITH ENCAPSULATION

REMOVAL - INTERIOR METHOD

The urethane adhesive holding the windshield to the opening pinch weld (fence) can be cut using a sharp cold knife from the exterior of the vehicle. Using the cold knife method is effective if the windshield is already broken. If the glass must be salvaged, cutting the urethane adhesive from the

WINDSHIELD (Continued)

interior of the vehicle using a reciprocating or oscillating power knife is recommended.

(1) Remove inside rear view mirror.

(2) Remove instrument panel top cover, refer to Instrument Panel.

(3) Remove A-pillar trim.

(4) Place protective covers over instrument panel and hood.

(5) Using a reciprocating or oscillating power knife, cut urethane adhesive holding the windshield to the A-pillars, roof header and cowl pinch weld fences. Refer to instructions provided with the equipment being used.

(6) Remove windshield from vehicle.

INSTALLATION

CAUTION: Open the left front door glass before installing windshield to avoid pressurizing the passenger compartment. If a door is slammed before urethane bonding is cured, water leaks can result. Allow the urethane at least 24 hours to cure before returning the vehicle to use.
To avoid stressing the replacement windshield, the urethane bonding material on the windshield fence should be smooth and consistent to the shape of the replacement windshield. The support spacers should be cleaned and properly installed on weld studs or repair screws at bottom of windshield opening.

(1) Verify support spacers in windshield opening. If not present, install spacers as indicated. (Fig. 9)

(2) Verify squeak tape on roof panel hooks. If not present, install squeak tape. (Fig. 9) Section C-C.

(3) Verify replacement windshield has squeak tape and anti-squeak lube. If not present, install squeak tape and anti-squeak lube. (Fig. 8)

(4) Position windshield into opening by installing encapsulation locator pin then loading the encapsulation hooks onto the panel hooks. (Fig. 10)

(5) Verify glass encapsulation lays evenly along roof panel and that there is no gapping of the encapsulation squeak tape to the windshield opening. If gaps are present, the pinch weld fence must be formed to the shape of the new glass.

(6) Remove replacement windshield from opening.

(7) Position the windshield inside up on a suitable work surface with two padded, wood 10 cm by 10 cm by 50 cm (4 in. by 4 in. by 20 in.) blocks, placed parallel 75 cm (2.5 ft.) apart. (Fig. 11)

WARNING: DO NOT USE SOLVENT BASED GLASS CLEANER TO CLEAN WINDSHIELD BEFORE APPLYING GLASS PREP AND PRIMER. POOR ADHESION CAN RESULT.

(8) Clean inside of windshield with ammonia based glass cleaner and lint-free cloth.

(9) Apply Glass Prep adhesion promoter 25 mm (1 in.) wide around perimeter of windshield and wipe with clean/dry lint-free cloth until no streaks are visible.

(10) Apply Glass Primer 25 mm (1 in.) wide around perimeter of windshield. Allow at least three minutes drying time.

(11) Apply a bead of urethane on windshield glass as indicated. (Fig. 11)

(12) With the aid of a helper, position the windshield over the windshield opening and install encapsulation locator pin then load encapsulation hooks onto the roof panel hooks.

(13) Push windshield into opening until no gap encapsulation lays evenly along roof panel and there is no gapping of encapsulation squeak tape to the windshield opening

(14) Clean excess urethane from exterior with Mopar, Super clean or equivalent.

(15) Apply tape to windshield assembly as required if gap exists around windshield opening.

(16) After urethane has cured, remove tape strips and water test windshield to verify repair.

(17) Install cowl covers.

(18) Install inside rear view mirror.

(19) Allow urethane to cured for 10–12 hours. Remove tape strips and water test windshield.

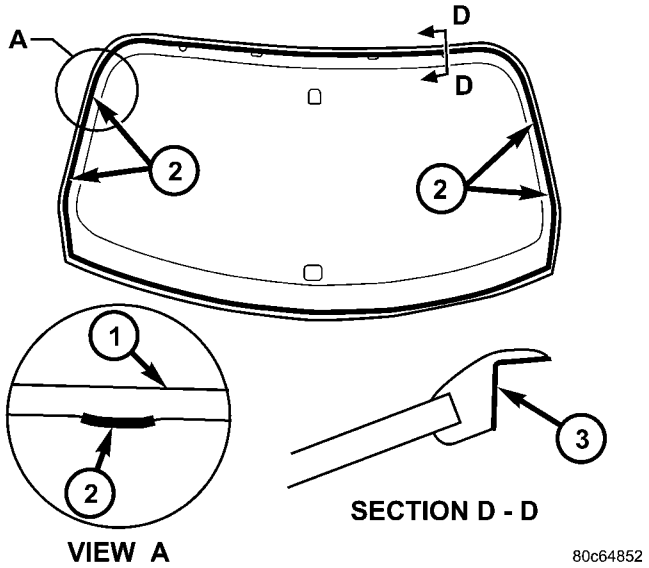

Fig. 8 WINDSHIELD INSTALLATION

1- WINDSHIELD ASSEMBLY WITH ENCAPSULATION
2 - ENCAPSULATION SQUEAK REDUCTION TAPE
3 - ANTI-SQUEAK LUBRICANT

WINDSHIELD (Continued)

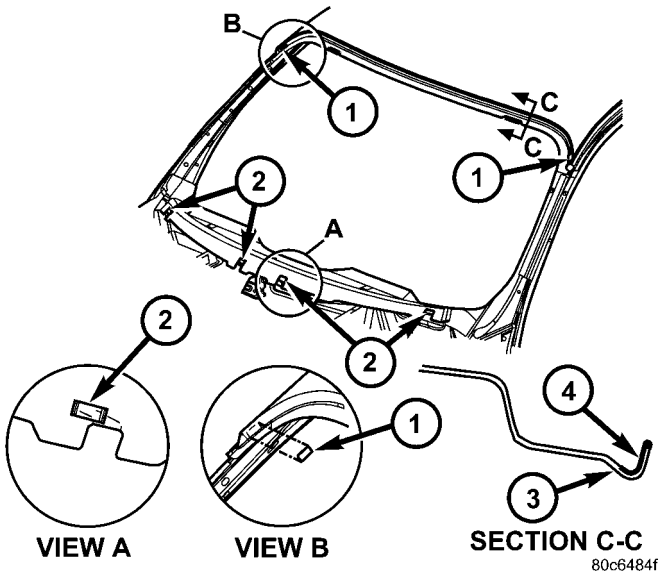

Fig. 9 WINDSHIELD SUPPORTS

1 - SUPPORT SPACERS ON ROOF PANEL (9mm X 20mm X 3mm)
2 - SUPPORT SPACERS ON COWL PANEL (9mm X 20mm X 6mm)
3 - ROOF PANEL HOOK
4 - ROOF PANEL SQUEAK REDUCTION TAPE

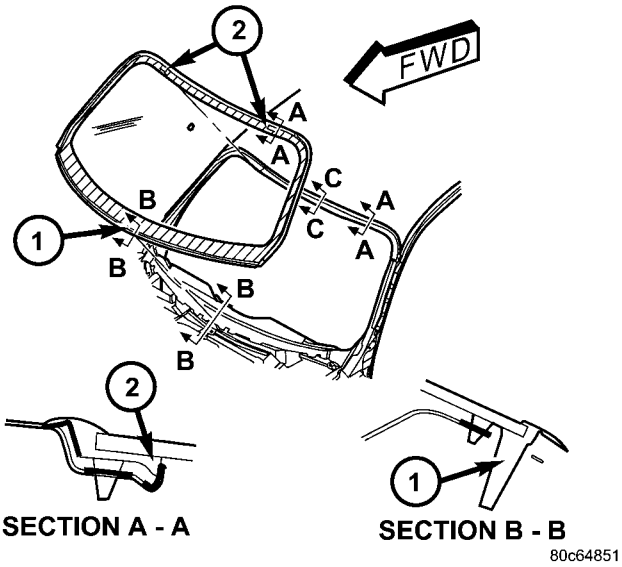

Fig. 10 WINDSHIELD LOADING

1 - ENCAPSULATION LOCATOR PIN
2 - ENCAPSULATION HOOK

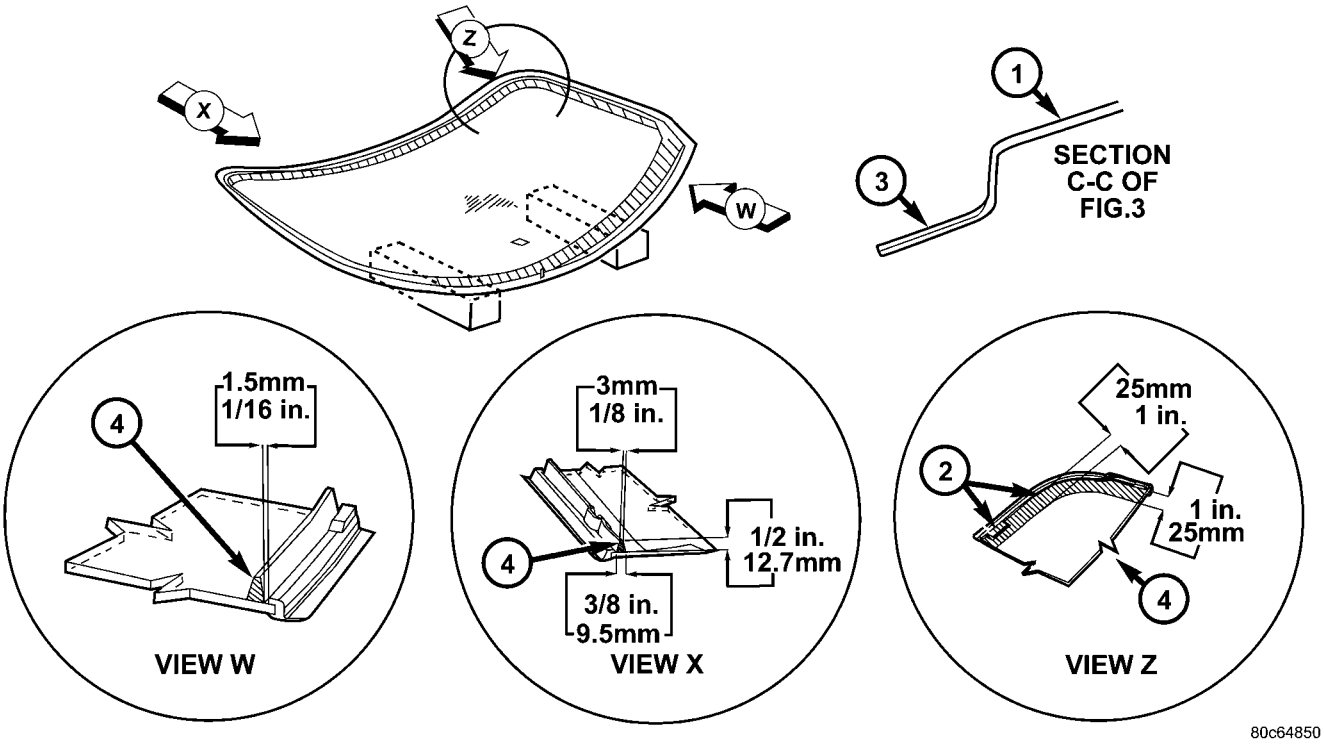

Fig. 11 URETHANE APPLICATION

1 - WINDSHIELD ASSEMBLY WITH ENCAPSULATION
2 - GLASS PRIMERS
3 - WINDSHIELD OPENING PRIMER
4 - URETHANE

SUNROOF

TABLE OF CONTENTS

	page
SUNROOF	
DESCRIPTION	81
DIAGNOSIS AND TESTING - SUNROOF	81
SUNROOF MODULE ASSEMBLY	
REMOVAL	83
INSTALLATION	83
ELECTRONIC CONTROL MODULE	
REMOVAL	84
INSTALLATION	84
SUNROOF DRIVE MOTOR	
REMOVAL	84
INSTALLATION	85
SUNROOF CONTROL SWITCH	
REMOVAL	85
INSTALLATION	85
WIND DEFLECTOR	
REMOVAL	85
INSTALLATION	85
GLASS PANEL	
REMOVAL	86
INSTALLATION	86
ADJUSTMENTS	
SUNROOF GLASS PANEL ADJUSTMENT	86
SUNROOF SUNSHADE	
REMOVAL	86
INSTALLATION	87
SUNROOF GLASS PANEL SEAL	
REMOVAL	87
INSTALLATION	87
OPENING TRIM LACE	
REMOVAL	87
INSTALLATION	87
SUNROOF TROUGH GUIDE ASSEMBLY	
REMOVAL	87
INSTALLATION	88
DRAIN TUBE	
REMOVAL	88
INSTALLATION	88

SUNROOF

DESCRIPTION

WARNING: Keep fingers and other body parts out of sunroof opening at all times.

The sunroof features a power sliding glass panel and a sunshade which can be manually positioned anywhere along its travel, rearward of glass panel front edge.

The sunroof is electrically operated from two switches located on the windshield header, rearward of the map lamp. To operate the sunroof the ignition switch must be in either the Accessory or On/Run position. One switch (vent) is a push button type and opens the sunroof to the vent position only. The other switch (open/close) is a rocker type for opening and closing the sunroof. Pressing and releasing the open button once the sunroof will express open and the wind deflector will rise. If the button is pressed a second time the sunroof will stop in that position. Pressing and holding the close button will close the sunroof. If the close button is released the sunroof will stop in that position.

DIAGNOSIS AND TESTING - SUNROOF

Before beginning sunroof diagnostics verify that all other power accessories are in proper operating condition. Refer to Sunroof Diagnostic Chart for possible causes. If not, a common electrical problem may exist. Refer to Wiring Diagrams, in this publication for circuit, splice and component descriptions. Check the condition of the circuit protection (20 amp circuit breaker in cavity 19 of the Junction Block). Inspect all wiring connector pins for proper engagement and continuity. Check for battery voltage at the power sunroof controller, refer to Wiring Diagrams, for circuit information. If battery voltage of more than 10 volts is detected at the controller, proceed with the following tests (the controller will not operate at less than 10 volts).

Before beginning diagnosis for wind noise or water leaks, verify that the problem was not caused by releasing the control switch before the sunroof was fully closed. The sunroof module has a water-management system. If however, the sunroof glass is in a partial closed position, high pressure water may be forced beyond the water management system boundaries and onto the headlining.

SUNROOF (Continued)

SUNROOF DIAGNOSIS CHART

SYMPTOM	POSSIBLE CAUSE
Sunroof motor inoperative.	Faulty control switch. Faulty circuit ground between sunroof electronics module, control switch, and body harness. Faulty power circuit between sunroof electronics module, control switch, and body harness. Faulty sunroof drive motor. Faulty sunroof electronics module. Faulty sunroof drive motor or electronics module.
Audible whine when switch is depressed, sunroof does not operate.	Faulty sunroof drive motor. Binding cable.
Audible clicking or ratcheting when switch is pressed, sunroof does not operate.	Broken or worn drive cable. Worn drive motor gear. Mechanisms not synchronized.
Sunroof vents and opens, but does not close.	Broken or disengaged trough guide Binding cable. Faulty circuit. Faulty control switch. Faulty sunroof electronic module. Faulty drive motor.
Sunroof vents, but does not open.	Binding cable or mechanism. Faulty circuit. Faulty switch. Faulty sunroof electronic module.
Sunroof does not vent	Binding cable or mechanism. Faulty circuit. Faulty control switch. Faulty sunroof electronic module.
Sunroof water leak.	Drain tubes clogged or kinked or disconnected from the sunroof. Glass panel improperly adjusted. Faulty glass panel seal.
Gurgling sound from sunroof	Low spot in drain hose routing, allowing water to stand.
Wind noise from sunroof.	Front of glass panel too high or rear too low. Wind deflector not deploying. Glass not centered in opening. Faulty glass panel seal.
Rattles from open sunroof while driving	Loose or broken attaching hardware. Worn or broken mechanism.

SUNROOF (Continued)

WATER DRAINAGE AND WIND NOISE DIAGNOSIS

The sliding glass panel is designed to seal water entry with a snug fit between the roof and the seal. The fit can be checked by inserting a piece of paper between the roof and the seal. The piece of paper should have some resistance when pulled out when the glass panel is in the closed position. The sunroof housing will drain off a minimum amount of water. Excessive wind noise could result if the gap clearances are exceeded. The sunroof glass panel may need to be adjusted. Refer to Sunroof Glass Panel Adjustment for proper procedures.

Adequate drainage is provided by a drain trough in the sunroof housing which encircles the sliding glass panel and leads to drain hoses. If a wet headliner or other water leak complaints are encountered, before performing any adjustments, first ensure that the drainage system is not plugged or disconnected. Use a pint container to pour water into the sunroof housing drain trough. If water flow is restricted, use compressed air to blow out any material plugging the drain system. Retest system again.

To further check for a disconnected drain hose:

(1) Remove A-pillar trim, sun visors, and map lamps/mini console.

(2) Remove sunroof opening trim lace. Refer to Sunroof Opening Trim Lace.

(3) Lower headliner as necessary to gain access to sunroof housing drain tubes. Refer to Headlining Removal and Installation for proper procedures.

(4) Repair as necessary.

SUNROOF MODULE ASSEMBLY

REMOVAL

(1) Move glass panel to the fully closed position.

(2) Disconnect battery negative cable.

(3) Recline both front seats.

(4) Remove sunroof opening trim lace (Refer to 23 - BODY/SUNROOF/OPENING TRIM LACE - REMOVAL).

(5) Remove control switch(Refer to 23 - BODY/SUNROOF/CONTROL SWITCH - REMOVAL).

(6) Remove headliner (Refer to 23 - BODY/INTERIOR/HEADLINER - REMOVAL) and disconnect sunroof wire harness.

(7) Disconnect the four drain tubes from sunroof housing.

(8) Loosen fasteners attaching sunroof module assembly.

(9) Remove the two bracket screws at the rear of the module.

(10) With the aid of a helper, support the sunroof and remove the remaining six fasteners attaching sunroof module assembly to roof panel (Fig. 1).

(11) Remove sunroof module from vehicle.

INSTALLATION

(1) Raise sunroof module assembly and guide it carefully into position.

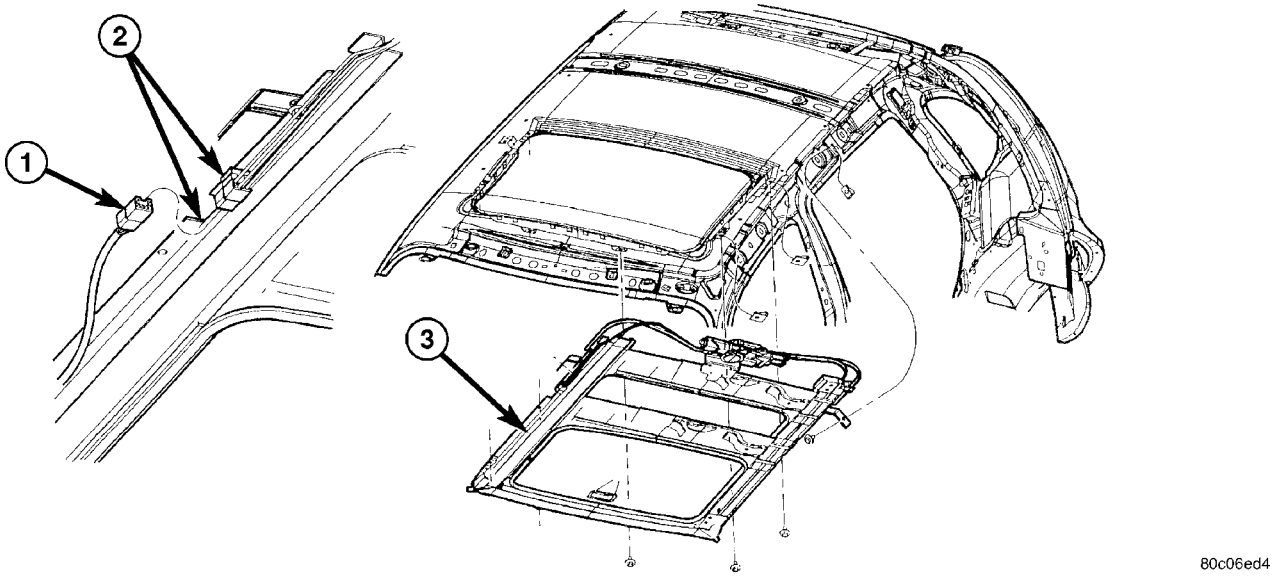

Fig. 1 SUNROOF MODULE ASSEMBLY

1 - SUNROOF WIRING CONNECTOR
2 - SIDE RAIL
3 - SUNROOF MODULE

SUNROOF MODULE ASSEMBLY (Continued)

(2) While supporting the sunroof module tighten the six module attaching screws (Fig. 1). Tighten to 9.5 N·m (84 in. lbs.) torque.

(3) Install the two bracket screws at the rear of the module. Tighten to 9.5 N·m (84 in. lbs.) torque.

(4) Connect the drain tubes to the sunroof.

(5) Connect wire harness.

(6) Install headliner(Refer to 23 - BODY/INTERIOR/HEADLINER - INSTALLATION).

(7) Install sunroof control switch (Refer to 23 - BODY/SUNROOF/CONTROL SWITCH - INSTALLATION).

(8) Connect battery negative cable.

(9) Test sunroof operation, adjust as necessary(Refer to 23 - BODY/SUNROOF/GLASS PANEL - ADJUSTMENTS).

(10) Install sunroof opening trim lace position(Refer to 23 - BODY/SUNROOF/OPENING TRIM LACE - INSTALLATION).

ELECTRONIC CONTROL MODULE

REMOVAL

(1) Remove sunroof module assembly(Refer to 23 - BODY/SUNROOF/MODULE ASSEMBLY - REMOVAL).

(2) Cut wire retaining tape near motor being careful not to cut wires.

(3) Disconnect drive motor's wire harness.

(4) Remove three motor assembly retaining screws from bottom side of motor, and remove motor assembly (Fig. 2).

(5) From top side of module assembly, remove one attaching screw from control module.

(6) Disconnect the two wire connectors from electronic control module assembly.

(7) Remove control module.

INSTALLATION

(1) Check glass assembly position. Adjust to full closed position. Insert pin into holes in lift arm assembly to check position (Fig. 3).

(2) Check electronics module and ensure it's in the full closed position.

(3) Set new electronic module in position on top side of motor mounting bracket engaging drive cables with pinion gear in electronics module.

(4) Install one screw to attach electronics module to motor bracket. Tighten screw to 3 N·m (27 in. lbs.) torque.

(5) Install motor assembly to motor bracket and electronics module with three screws. Tighten screw to 3 N·m (27 in. lbs.) torque.

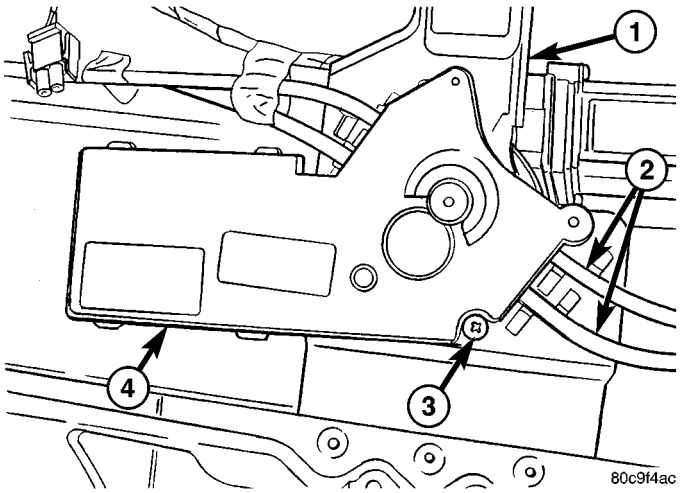

Fig. 2 CONTROL MODULE

1 - MOTOR BRACKET
2 - CABLES
3 - SCREW
4 - CONTROL MODULE

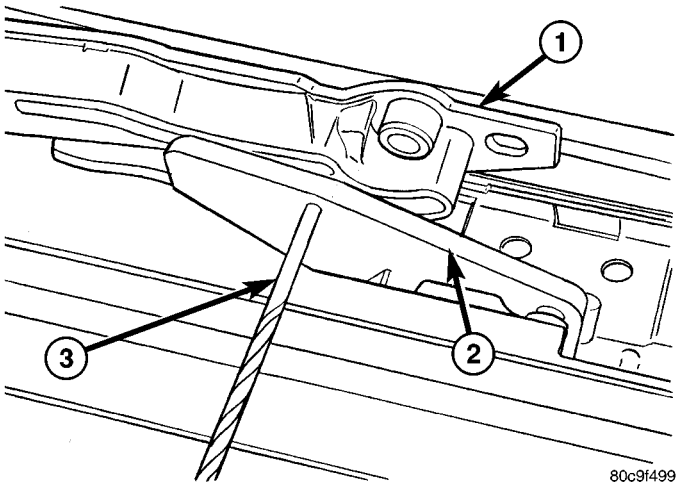

Fig. 3 LIFT ARM POSITIONING

1 - GLASS BRACKET
2 - LIFT ARM
3 - ALIGNMENT PIN

(6) Connect electrical connectors to module assembly wire harness. Secure any loose wires.

(7) Install sunroof module assembly(Refer to 23 - BODY/SUNROOF/MODULE ASSEMBLY - INSTALLATION).

SUNROOF DRIVE MOTOR

REMOVAL

(1) Remove sunroof opening trim lace(Refer to 23 - BODY/SUNROOF/OPENING TRIM LACE - REMOVAL).

SUNROOF DRIVE MOTOR (Continued)

(2) Remove sunroof control switch(Refer to 23 - BODY/SUNROOF/CONTROL SWITCH - REMOVAL).

(3) Remove headliner(Refer to 23 - BODY/INTERIOR/HEADLINER - REMOVAL) and disconnect sunroof wire connector.

(4) Cut wire retaining tape near motor being careful not to cut wires.

(5) Disengage wire harness from motor (Fig. 4).

(6) Remove three motor assembly attaching screws from bottom side of motor assembly.

(7) Remove motor assembly.

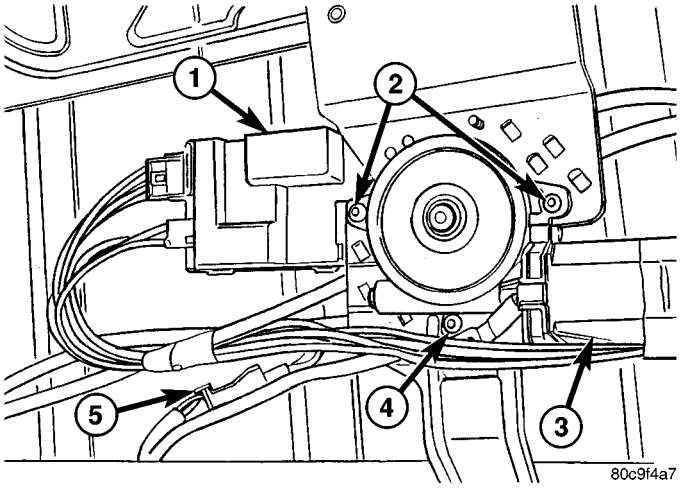

Fig. 4 DRIVE MOTOR ASSEMBLY

1 - CONTROL MODULE
2 - SCREWS
3 - DRIVE MOTOR
4 - SCREW
5 - ELECTRICAL CONNECTOR

INSTALLATION

(1) Place motor into position (Fig. 4).

(2) Install three screws attaching motor to bracket. Tighten screws to 3 N·m (27 in. lbs.) torque.

NOTE: Hold electronics module to motor bracket when inserting motor shaft to avoid disengaging drive cables.

(3) Connect sunroof electrical connector.

(4) Tape wires to drive cables to prevent rattles.

(5) Install headliner(Refer to 23 - BODY/INTERIOR/HEADLINER - INSTALLATION).

(6) Install sunroof control switch(Refer to 23 - BODY/SUNROOF/CONTROL SWITCH - INSTALLATION).

(7) Test sunroof operation, adjust sunroof glass as necessary(Refer to 23 - BODY/SUNROOF/GLASS PANEL - INSTALLATION).

(8) Install sunroof opening lace(Refer to 23 - BODY/SUNROOF/OPENING TRIM LACE - INSTALLATION).

SUNROOF CONTROL SWITCH

REMOVAL

(1) Using a flat blade tool, release switch from the headliner.

(2) Disconnect the wire connector from the control switch.

INSTALLATION

(1) Connect the wire connector to the control switch.

(2) Install control switch into headliner.

(3) Test sunroof operation.

WIND DEFLECTOR

REMOVAL

(1) Fully open sunroof glass panel.

(2) Remove two screws attaching wind deflector straps to front crossmember (Fig. 5).

(3) Rotate wind deflector into the vertical, 90° to the roof.

(4) Push wind deflector arms down and rearward to disengage arms from spring hooks.

(5) Remove wind deflector.

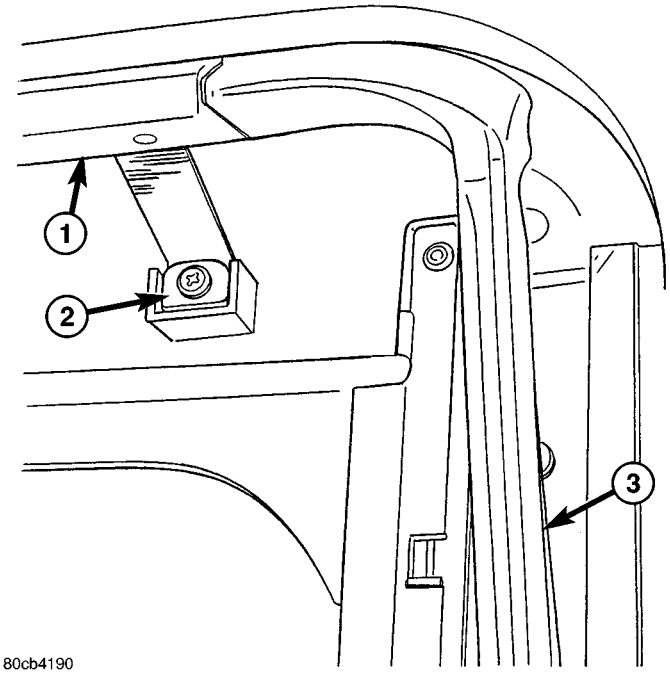

Fig. 5 SUNSHADE

1 - WIND DEFLECTOR
2 - SCREW
3 - SPRING

INSTALLATION

(1) Place wind deflector in position 90° to roof.

WIND DEFLECTOR (Continued)

(2) Push arms down and forward to engage spring hooks.

(3) Rotate wind deflector forward into correct position. Depress wind deflector down onto front crossmember to check spring function.

(4) Install two screw attaching wind deflector straps to front crossmember (Fig. 5). Tighten screws to 1 N·m (9 in. lbs.) torque.

GLASS PANEL

REMOVAL

(1) Move the glass panel to the closed position.
(2) Slide sunshade rearward to the open position.
(3) Remove the four glass panel screws (Fig. 6).
(4) Lift off glass panel and remove from vehicle.

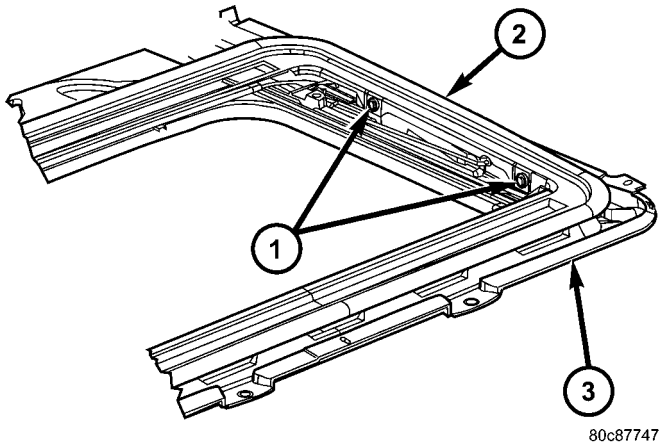

Fig. 6 GLASS PANEL

1 - SCREWS
2 - GLASS PANEL
3 - MODULE ASSEMBLY

INSTALLATION

(1) Position glass panel on to mechanism lift arms.

(2) Start the four attaching screws, do not fully tighten (Fig. 6).

(3) Adjust sunroof glass(Refer to 23 - BODY/SUNROOF/GLASS PANEL - ADJUSTMENTS).

(4) Verify sunroof operation and alignment.

ADJUSTMENTS

SUNROOF GLASS PANEL ADJUSTMENT

(1) Move the sunshade rearward to the open position.

(2) Move the sunroof glass panel to the fully closed position.

(3) Loosen the forward attaching screws on each side enough to make the front of the glass to adjust up or down (Fig. 6).

(4) Adjust the front surface of the sunroof glass panel 1.75 mm to 2.75 mm (0.07 in. to 0.11 in.) below the top surface of the roof.

NOTE: Top of the glass seal is 2.5 mm (0.1 in.) higher than the surface of the sunroof glass. Measure at 300 mm (11.8 in.) outboard of the center line of the vehicle.

(5) Tighten the front glass panel attaching two screws to 3.5 N·m (31 in. lbs.) torque (Fig. 6).

(6) Loosen the rear screws on each side enough to make the rear adjustment (Fig. 6).

(7) Adjust the rear surface of the sunroof glass panel 0.75 mm to .75 mm (0.03 in. to 0.07 in.) below the top surface of the roof.

(8) Tighten the rear glass panel attaching two screws to 3.5 N·m (31 in. lbs.) torque (Fig. 6).

(9) Check for proper fit. If not OK, repeat glass panel adjustment.

SUNROOF SUNSHADE

REMOVAL

(1) Remove sunroof glass panel (Refer to 23 - BODY/SUNROOF/GLASS PANEL - REMOVAL).

(2) From the top of the vehicle through the roof opening remove the two screws (one LH and one RH side) attaching trough assembly to trough guides (Fig. 7).

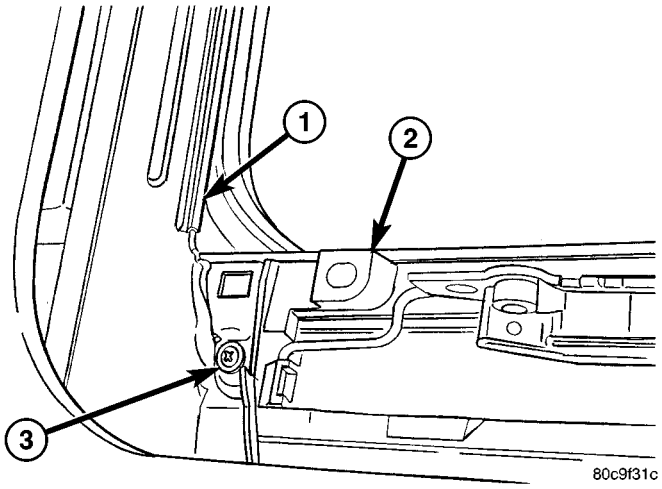

Fig. 7 GUIDE ASSEMBLY TROUGH

1 - TROUGH
2 - TROUGH GUIDE
3 - SCREW

(3) Remove trough assembly.

SUNROOF SUNSHADE (Continued)

(4) From the top of the vehicle through roof opening slide the sunshade forward, disengaging sunshade front guide feet through front opening in tracks.

(5) Continue to pull the sunshade forward and rotate sunshade until rear guide feet are disengaged from tracks and sunshade is completely free from the sunroof assembly.

CAUTION: Use care not to crease the sunshade when removing or installing.

INSTALLATION

(1) From top of the vehicle through roof opening place sunshade into position, rotating rear guide feet of sunshade into opening of track.

(2) Guide front sunroof feet through front opening and into the track grooves.

(3) Set trough assembly in position on sunroof assembly. Ensure that the trough crosses over the top of the sunshade.

(4) Install two screws attaching trough guide to trough assembly. Tighten screw to 1 N·m (9 in. lbs.) torque (Fig. 7).

SUNROOF GLASS PANEL SEAL

REMOVAL

(1) Remove sunroof glass panel (Refer to 23 - BODY/SUNROOF/GLASS PANEL - REMOVAL).

(2) Place glass panel on a clean work area with the top side up. Support the glass assembly from under side to avoid bending or otherwise damaging the mounting tabs.

(3) Grasp the seal and pull seal away from the glass panel. The seal is a one piece seal.

INSTALLATION

NOTE: Always position seal seam on center side of the passenger side of glass panel.

(1) Place seal into position.

(2) Install seal on glass panel. Using care working the seal around the glass, being careful not to stretch the seal while installing.

(3) Replace sunroof glass panel (Refer to 23 - BODY/SUNROOF/GLASS PANEL - INSTALLATION).

(4) Verify sunroof operation and alignment(Refer to 23 - BODY/SUNROOF/GLASS PANEL - ADJUSTMENTS).

OPENING TRIM LACE

REMOVAL

(1) Remove lace by starting at the joint center of the opening on driver's side.

(2) Pull one end of the lace away from the headliner until the entire lace is removed.

INSTALLATION

(1) Place trim lace into position starting at center of the opening on driver's side.

(2) Push lace into position.

(3) Ensure that the corner radii is fully engage.

(4) Once trim lace is attached to sunroof module begin tucking the headline under the lip on the trim lace working all the way around the opening.

SUNROOF TROUGH GUIDE ASSEMBLY

REMOVAL

(1) Remove the sunroof glass panel(Refer to 23 - BODY/SUNROOF/GLASS PANEL - REMOVAL).

(2) Place sunroof into the vent position.

(3) Remove two screws from the trough assembly (Fig. 7).

(4) Remove trough.

(5) Disconnect the guide link (Fig. 8).

(6) Slide trough guide forward and disengage the sliders through the notches in guide channels (Fig. 9).

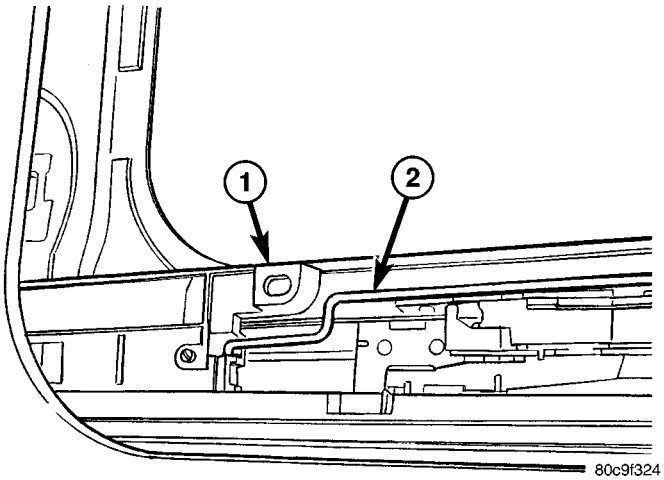

Fig. 8 TROUGH GUIDES

1 - TROUGH GUIDE
2 - GUIDE LINK

SUNROOF TROUGH GUIDE ASSEMBLY (Continued)

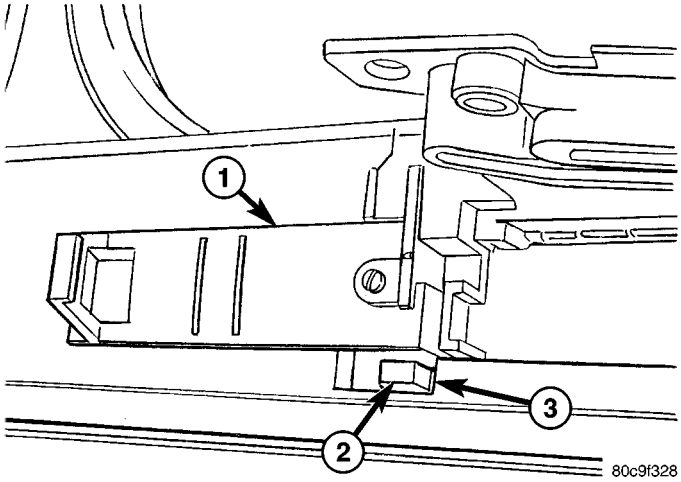

Fig. 9 TROUGH GUIDE REMOVAL

INSTALLATION

(1) Carefully twist trough guide through small slot (cut out) on track to install (Fig. 9).

(2) Connect the trough guide wire to the lifter arm (Fig. 8).

(3) Place the trough into position on sunroof. Ensure that the trough crosses over the top of the sunshade.

(4) Install the two screws that attach the trough to the trough guides (Fig. 7). Tighten screws to 1 N·m (9 in. lbs.) torque.

(5) Install sunroof glass panel (Refer to 23 - BODY/SUNROOF/GLASS PANEL - INSTALLATION).

DRAIN TUBE

REMOVAL

FRONT HOSES

(1) Move glass panel to the fully closed position.

(2) Remove sunroof opening trim lace (Refer to 23 - BODY/SUNROOF/OPENING TRIM LACE - REMOVAL).

(3) Disconnect the control switch and wire connector.

(4) Remove headliner (Refer to 23 - BODY/INTERIOR/HEADLINER - REMOVAL).

(5) Disconnect the drain hose from the sunroof housing (Fig. 10).

(6) Drain any liquid from hose connection, if necessary.

(7) Attach new drain hose to old hose with tape that is to be replaced.

(8) Work the old hose back and forth to loosen the sealer.

(9) Use care and pull the old hose out through the bottom and the new hose through.

REAR HOUSING HOSE

(1) Move glass panel to the fully closed position.

(2) Remove sunroof opening trim lace (Refer to 23 - BODY/SUNROOF/OPENING TRIM LACE - REMOVAL).

(3) Disconnect the control switch and wire connector.

(4) Remove headliner (Refer to 23 - BODY/INTERIOR/HEADLINER - REMOVAL).

(5) Disconnect the drain hose from the sunroof housing (Fig. 11).

(6) Drain any liquid from hose connection, if necessary.

(7) Attach new drain hose to old hose with tape that is to be replaced.

(8) Work the old hose back and forth to loosen the sealer.

(9) Use care and pull the old hose out through the bottom and the new hose through.

INSTALLATION

FRONT HOSES

(1) Connect the new drain hose to the sunroof housing and test drainage (Fig. 10).

(2) Install headliner (Refer to 23 - BODY/INTERIOR/HEADLINER - INSTALLATION).

(3) Install sunroof opening trim lace (Refer to 23 - BODY/SUNROOF/OPENING TRIM LACE - INSTALLATION).

(4) Connect the control switch wire connector and install control switch.

(5) Verify sunroof operation and alignment(Refer to 23 - BODY/SUNROOF/GLASS PANEL - ADJUSTMENTS).

DRAIN TUBE (Continued)

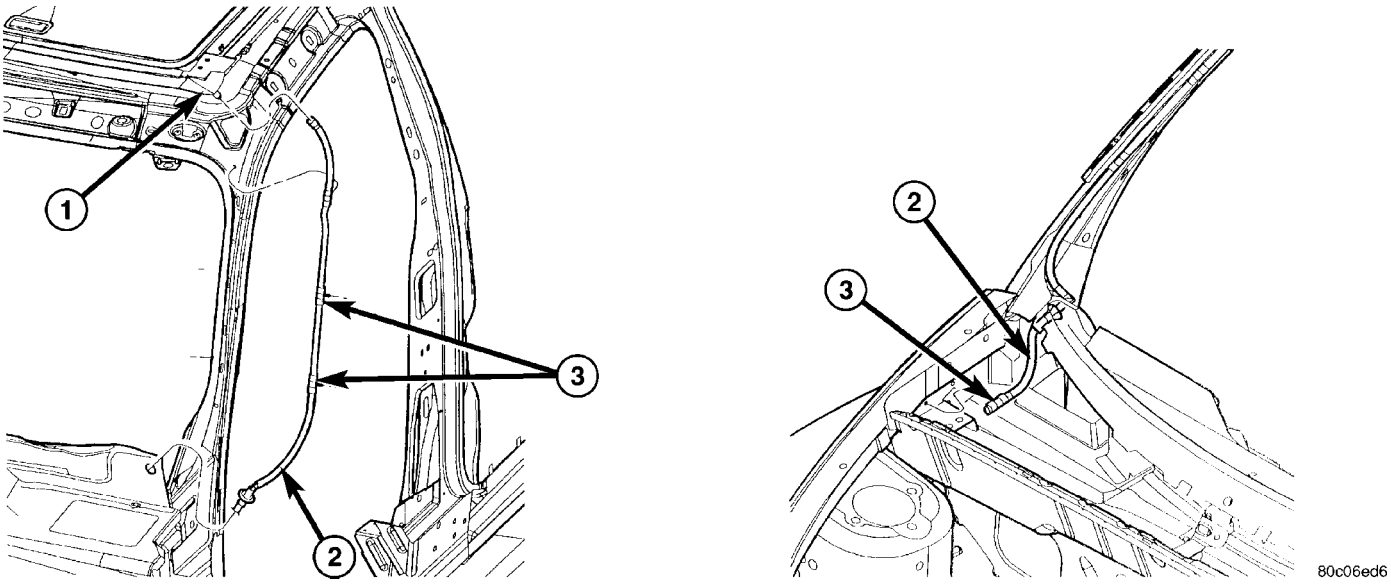

Fig. 10 FRONT DRAIN HOSE

1 - SUNROOF MODULE
2 - SUNROOF FRONT DRAIN HOSE
3 - CLIPS

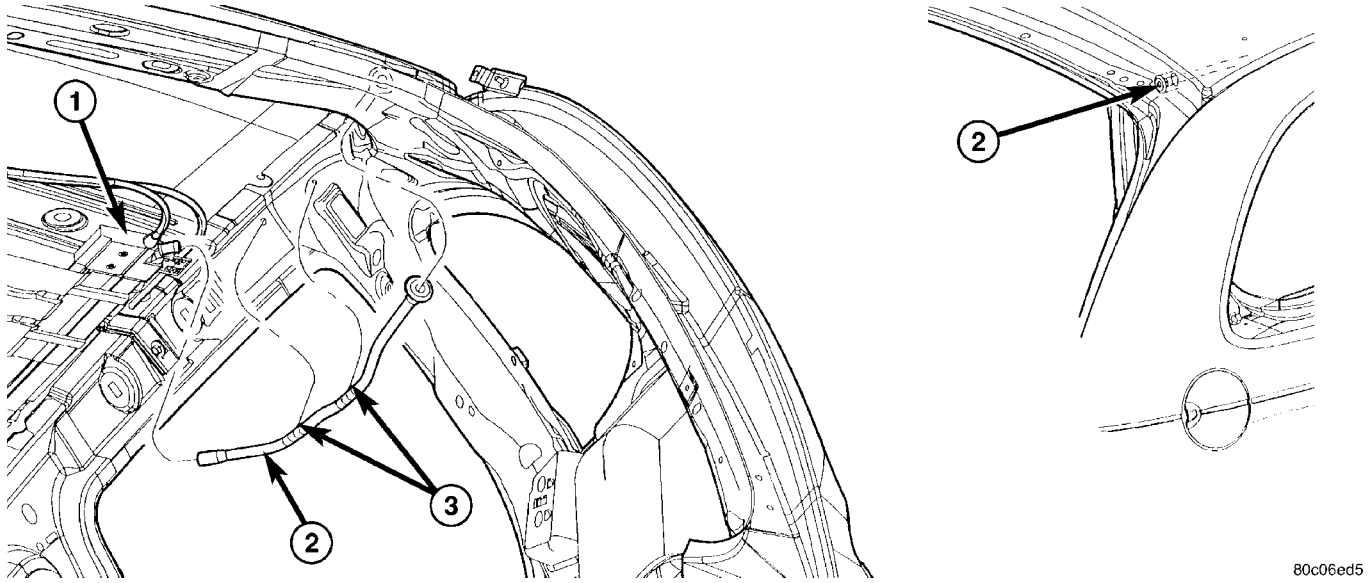

Fig. 11 REAR DRAIN HOSES

1 - SUNROOF MODULE
2 - SUNROOF REAR DRAIN HOSE
3 - CLIPS

REAR HOUSING HOSE

(1) Connect the new drain hose to the sunroof housing and test drainage (Fig. 11).

(2) Install headliner (Refer to 23 - BODY/INTERIOR/HEADLINER - INSTALLATION).

(3) Install sunroof opening trim lace (Refer to 23 - BODY/SUNROOF/OPENING TRIM LACE - INSTALLATION).

(4) Connect the control switch wire connector and install control switch.

(5) Verify sunroof operation and alignment(Refer to 23 - BODY/SUNROOF/GLASS PANEL - ADJUSTMENTS).

WEATHERSTRIP/SEALS

TABLE OF CONTENTS

page

FRONT AND REAR DOOR OPENING WEATHERSTRIP
REMOVAL 90
INSTALLATION 90
FRONT AND REAR DOOR UPPER SECONDARY WEATHERSTRIP
REMOVAL 90
INSTALLATION 90
FRONT DOOR GLASS RUN WEATHERSTRIP
REMOVAL 90
INSTALLATION 90
FRONT DOOR INNER BELT WEATHERSTRIP
REMOVAL 92
INSTALLATION 92
FRONT DOOR OUTER BELT WEATHERSTRIP
REMOVAL 92
INSTALLATION 92
LIFTGATE WEATHERSTRIP
REMOVAL 92
INSTALLATION 92
REAR DOOR GLASS RUN WEATHERSTRIP
REMOVAL 92
INSTALLATION 93
REAR DOOR INNER BELT WEATHERSTRIP
REMOVAL 93
INSTALLATION 93
SILL SECONDARY WEATHERSTRIP
REMOVAL 93
INSTALLATION 93

FRONT AND REAR DOOR OPENING WEATHERSTRIP

REMOVAL

(1) Open front/rear door.
(2) Remove door opening sill plate.
(3) Pull body mounted weatherstrip from fence around door opening (Fig. 1).

INSTALLATION

(1) Position weatherstrip at the B-pillar upper corner (Fig. 1) .
(2) Engage front/rear weatherstrip on the fence at upper B-pillar and work down the B-pillar.
(3) Engage weatherstrip along the header and down the A-pillar/C-pillar.
(4) Engage weatherstrip along the sill. There may be slack material work it to the front of the opening.
(5) Verify weatherstrip sealing.

FRONT AND REAR DOOR UPPER SECONDARY WEATHERSTRIP

REMOVAL

(1) Open the front/rear door.
(2) Using a wide blade flat tool, unseat the push pin at the base of the “A” pillar.
(3) Pull the weatherstrip off the vehicle.

INSTALLATION

(1) Clean off any remain butyl residue on the body.
(2) Push seal into position under the quarter window glass and along the door opening.
(3) Locate the push pins at the base of the “A” pillar and push into place.
(4) Install the remainder of the seal.

FRONT DOOR GLASS RUN WEATHERSTRIP

REMOVAL

(1) Remove flag cover, door trim panel, water dam as necessary.
(2) Remove door glass.
(3) Loosen side view mirror, as necessary.
(4) Remove weatherstrip fasteners (Fig. 2).
(5) Pull weatherstrip from lower front channel above door latch.
(6) Pull run weatherstrip from window frame channel.

INSTALLATION

(1) Clean butyl material from door flange area.
(2) Place door run weatherstrip in position on window frame channel (Fig. 2).
(3) Starting in the corners, push door run weatherstrip into window frame channel.
(4) Push weatherstrip into lower front channel above door latch.

FRONT DOOR GLASS RUN WEATHERSTRIP (Continued)

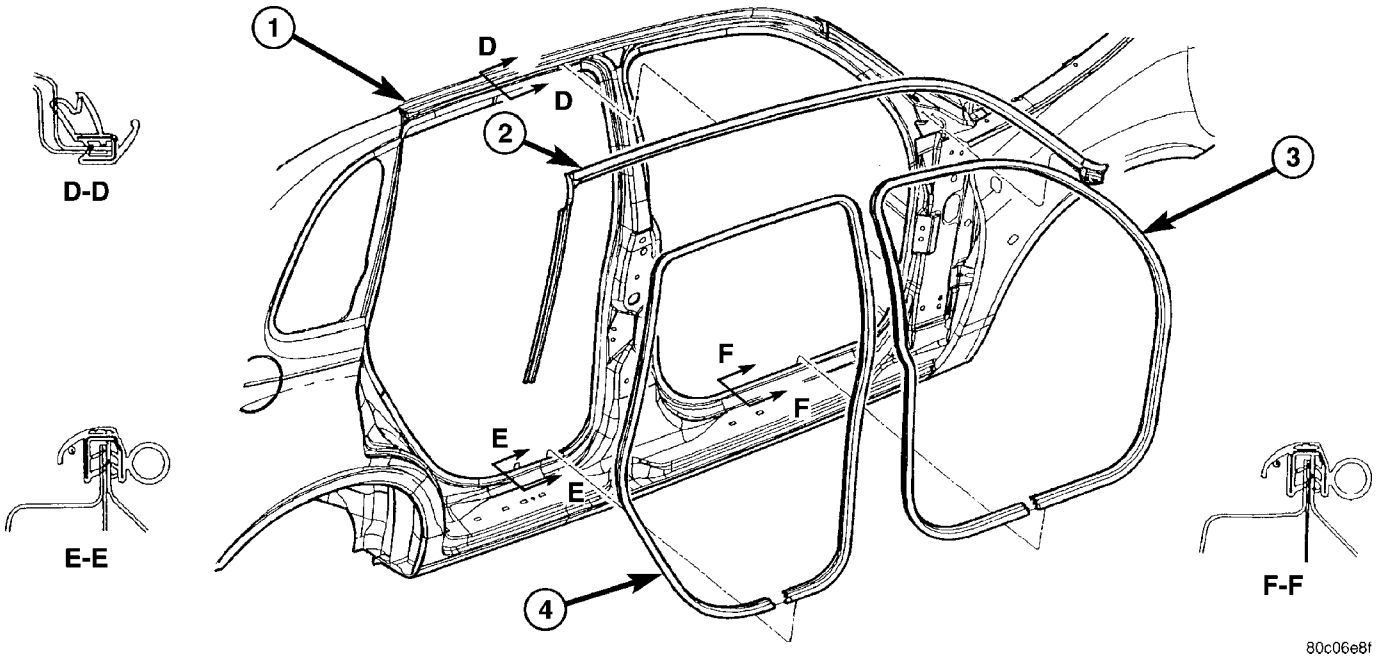

Fig. 1 FRONT DOOR BODY MOUNTED WEATHERSTRIP

1 - ROOF LINE
2 - FRONT/REAR DOOR UPPER SECONDARY WEATHERSTRIP
3 - FRONT DOOR OPENING WEATHERSTRIP
4 - REAR DOOR OPENING WEATHERSTRIP

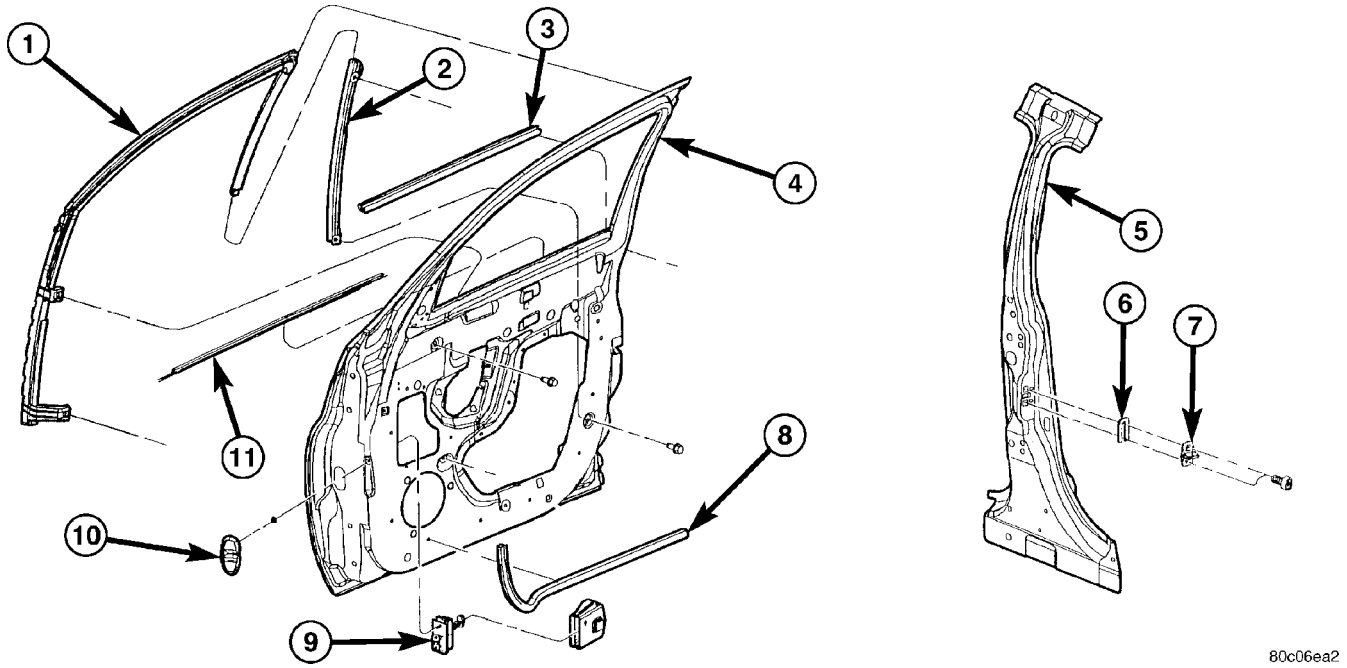

Fig. 2 FRONT DOOR WEATHERSTRIP

1 - FRONT DOOR GLASS RUN WEATHERSTRIP
2 - FRONT DOOR GLASS LOWER REAR CHANNEL
3 - FRONT DOOR INNER BELT WEATHERSTRIP
4 - FRONT DOOR
5 - B-PILLAR
6 - FRONT DOOR LATCH STRIKER SPACER
7 - FRONT DOOR LATCH STRIKER
8 - FRONT DOOR SILL WEATHERSTRIP
9 - FRONT DOOR CHECK STRAP AND COVER
10 - FRONT DOOR CHECK STRAP SEAL
11 - FRONT DOOR OUTER BELT WEATHERSTRIP

FRONT DOOR GLASS RUN WEATHERSTRIP (Continued)

(5) Install weatherstrip fasteners.
(6) Install door glass.
(7) Tighten side view mirror.
(8) Install pull cup support bracket, water shield, door trim panel and flag trim.

FRONT DOOR INNER BELT WEATHERSTRIP

REMOVAL

(1) Remove door trim panel.
(2) Remove inner belt weatherstrip from door. If necessary, use a rubber mallet and a block of wood, tapping upward at each clip attaching the molding to the door (Fig. 2).

INSTALLATION

(1) Align the weatherstrip to the “A” and “B” pillars. Push down on weatherstrip to engage channel to door panel (Fig. 2).
(2) Install door trim panel.

FRONT DOOR OUTER BELT WEATHERSTRIP

REMOVAL

(1) Open door glass.
(2) Remove weatherstrip screw at the rearward edge of door (Fig. 3).
(3) Pull upward at rear end of outer belt weatherstrip.
(4) Remove outer belt weatherstrip from vehicle.

INSTALLATION

(1) Starting at leading edge of door, press weatherstrip into position (Fig. 3) .
(2) Install screw into weatherstrip.
(3) Operate window and check for interference.

LIFTGATE WEATHERSTRIP

REMOVAL

(1) Open liftgate.
(2) Remove weatherstrip, pull outward on the weatherstrip. (Fig. 4)
(3) Remove outer belt weatherstrip from vehicle.

INSTALLATION

(1) Starting at bottom center, press weatherstrip into position (Fig. 4) .
(2) Open and close liftgate and check for interference.

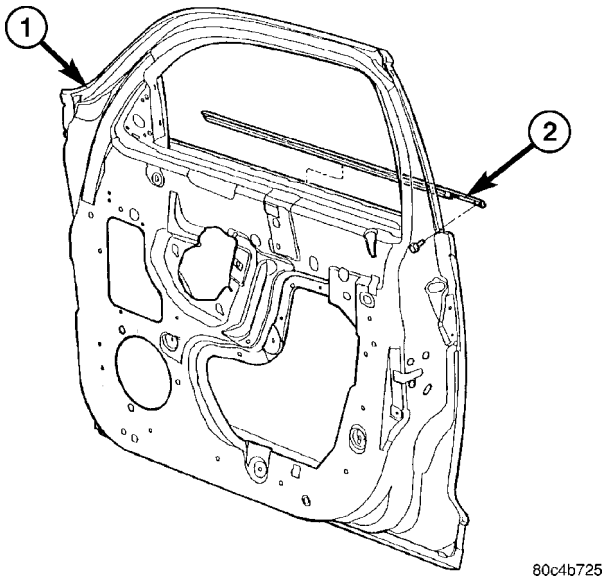

Fig. 3 DOOR OUTER BELT WEATHERSTRIP

1 - FRONT DOOR
2 - DOOR OUTER BELT WEATHERSTRIP

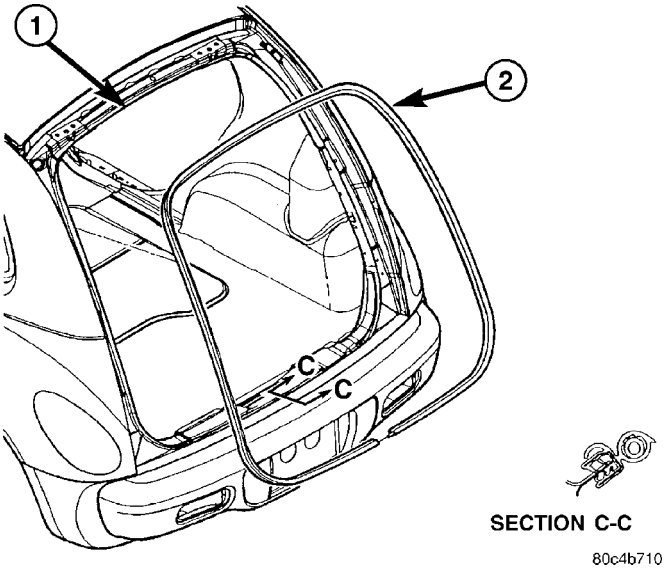

Fig. 4 DOOR OUTER BELT WEATHERSTRIP

1 - LIFTGATE OPENING
2 - LIFTGATE OPENING WEATHERSTRIP

REAR DOOR GLASS RUN WEATHERSTRIP

REMOVAL

(1) Remove door trim panel, water shield as necessary.
(2) Remove door glass.
(3) Pull weatherstrip from flange.
(4) Pull run weatherstrip from window frame channel.

REAR DOOR GLASS RUN WEATHERSTRIP (Continued)

INSTALLATION

(1) Clean butyl material from door flange area.

(2) Place door run weatherstrip in position on window frame channel corners first (Fig. 5) .

(3) Push door run weatherstrip into window frame channel.

(4) Install door glass.

(5) Install pull cup support bracket, water dam, and door trim panel.

REAR DOOR INNER BELT WEATHERSTRIP

REMOVAL

(1) Remove door trim panel.

(2) Remove inner belt weatherstrip from door. If necessary, use a rubber mallet and a block of wood, tapping upward at each clip attaching the molding to the door (Fig. 6).

INSTALLATION

(1) Align the weatherstrip to the “B” and “C” pillars.Push down on weatherstrip to engage channel to door panel (Fig. 6).

(2) Install door trim panel.

SILL SECONDARY WEATHERSTRIP

REMOVAL

(1) Using a fork-type prying tool, disengage push in fasteners attaching sill secondary weatherstrip to door (Fig. 7).

(2) Remove weatherstrip from door.

INSTALLATION

(1) Position weatherstrip to door (Fig. 7) .

(2) Press sill secondary weatherstrip fasteners into position.

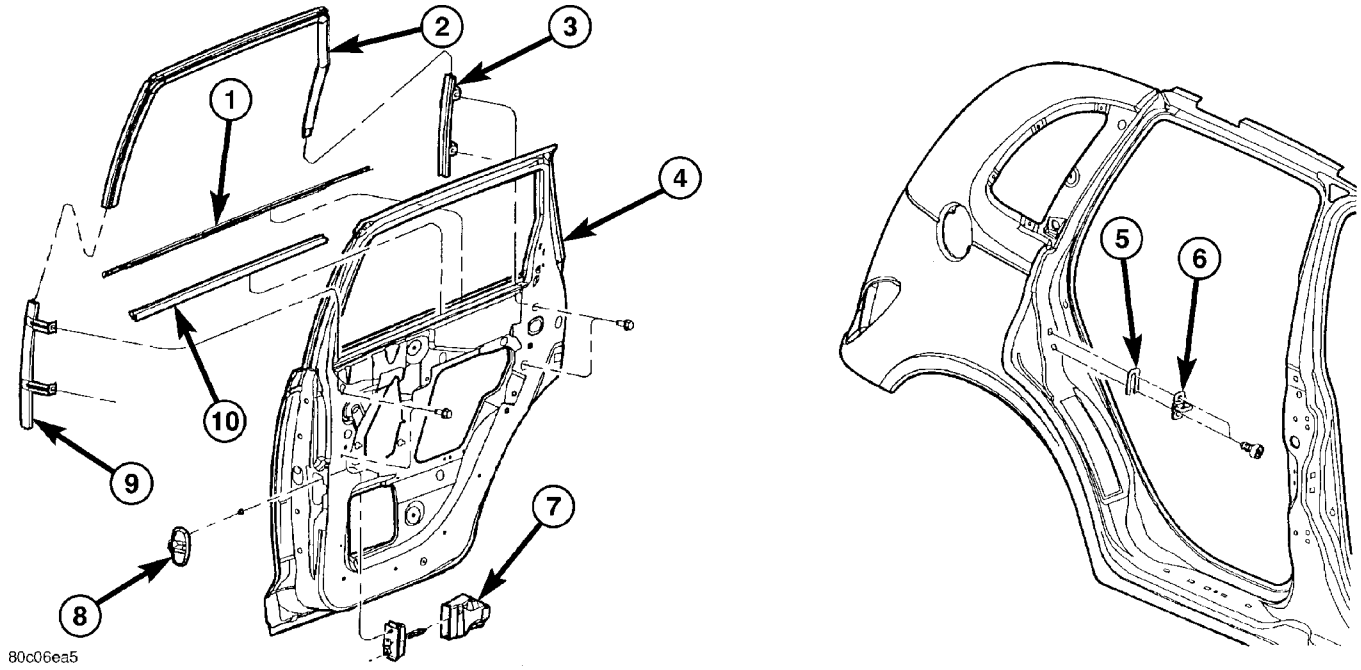

Fig. 5 Rear Door Striker

1 -REAR DOOR OUTER BELT WEATHERSTRIP
2 - REAR DOOR GLASS RUN WEATHERSTRIP
3 - REAR DOOR GLASS LOWER CHANNEL REAR
4 - REAR DOOR
5 - REAR DOOR LATCH STRIKER SPACER
6 - REAR DOOR LATCH STRIKER
7 - REAR DOOR CHECK STRAP AND COVER
8 - REAR DOOR CHECK STRAP SEAL
9 - REAR DOOR GLASS LOWER CHANNEL FRONT
10 - REAR DOOR INNER BELT WEATHERSTRIP

SILL SECONDARY WEATHERSTRIP (Continued)

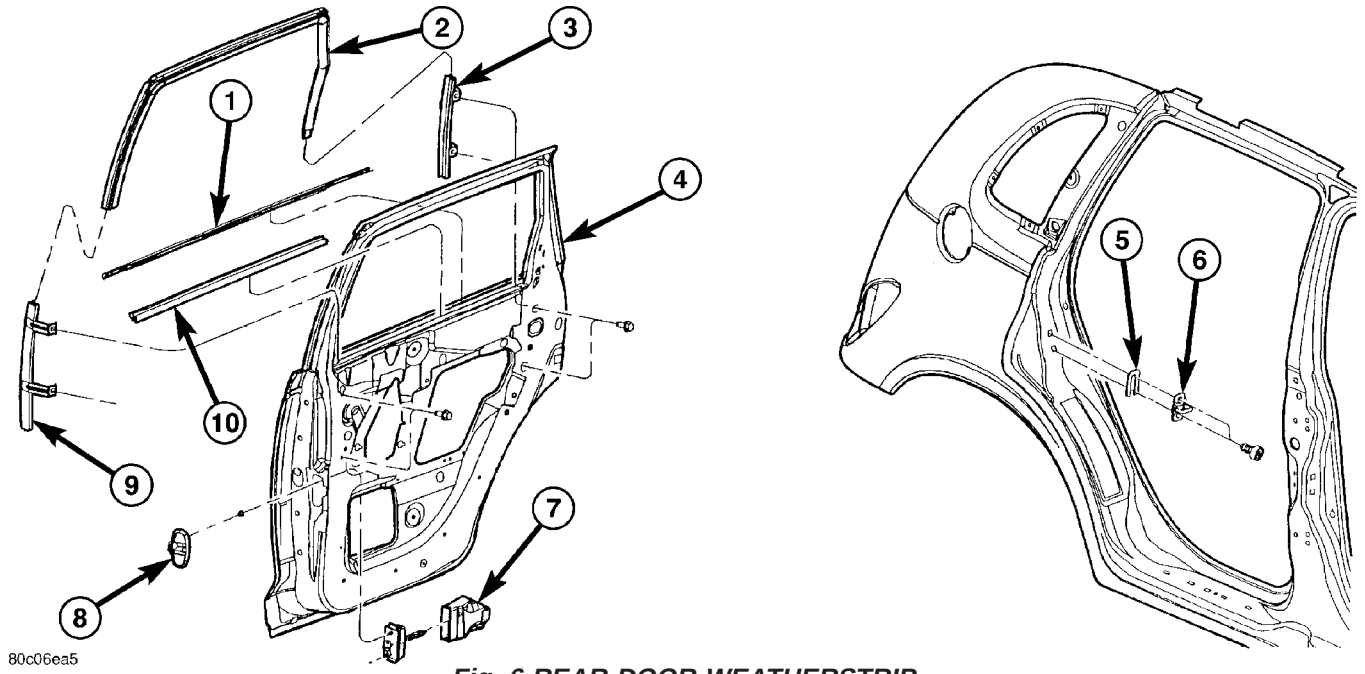

Fig. 6 REAR DOOR WEATHERSTRIP

1 - REAR DOOR OUTER BELT WEATHERSTRIP
2 - REAR DOOR GLASS RUN WEATHERSTRIP
3 - REAR DOOR GLASS LOWER CHANNEL REAR
4 - REAR DOOR
5 - REAR DOOR LATCH STRIKER SPACER
6 - REAR DOOR LATCH STRIKER
7 - REAR DOOR CHECK STRAP AND COVER
8 - REAR DOOR CHECK STRAP SEAL
9 - REAR DOOR GLASS LOWER CHANNEL FRONT
10 - REAR DOOR INNER BELT WEATHERSTRIP

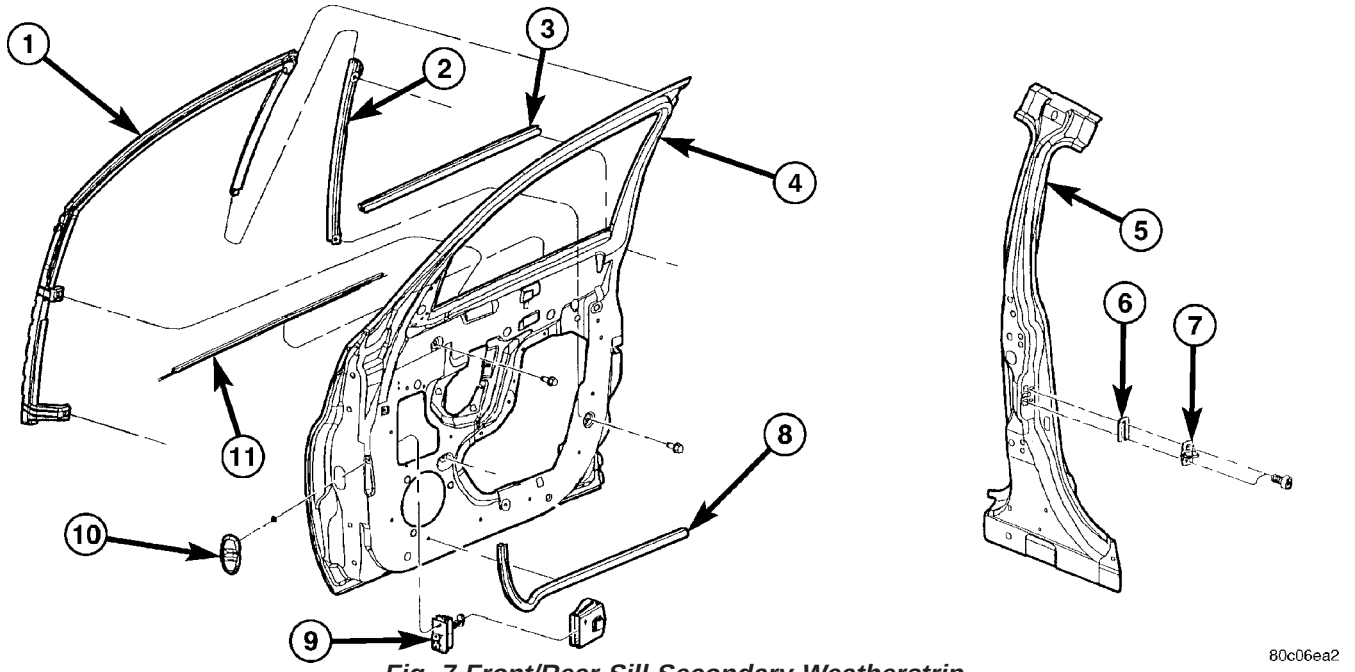

Fig. 7 Front/Rear Sill Secondary Weatherstrip

1 – FRONT DOOR GLASS RUN WEATHERSTRIP
2 – FRONT DOOR GLASS LOWER REAR CHANNEL
3 – FRONT DOOR INNER BELT WEATHERSTRIP
4 – FRONT DOOR
5 – B-PILLAR
6 – FRONT DOOR LATCH STRIKER SPACER
7 – FRONT DOOR LATCH STRIKER
8 – FRONT DOOR SILL WEATHERSTRIP
9 – FRONT DOOR CHECK STRAP AND COVER
10 – FRONT DOOR CHECK STRAP SEAL
11 – FRONT DOOR OUTER BELT WEATHERSTRIP

BODY STRUCTURE

TABLE OF CONTENTS

page

GAP AND FLUSH
SPECIFICATIONS - BODY GAP AND FLUSH MEASUREMENTS 95
OPENING DIMENSIONS
SPECIFICATIONS - BODY OPENING DIMENSION 97
SEALER LOCATIONS
SPECIFICATIONS - BODY SEALING LOCATIONS 99

page

STRUCTURAL ADHESIVE LOCATIONS
SPECIFICATIONS - STRUCTURAL ADHESIVES 114
WELD LOCATIONS
SPECIFICATIONS - WELD LOCATIONS 119

GAP AND FLUSH

SPECIFICATIONS - BODY GAP AND FLUSH MEASUREMENTS

INDEX

DESCRIPTION	FIGURE
BODY GAP AND FLUSH	1

OPENING DIMENSIONS (Continued)

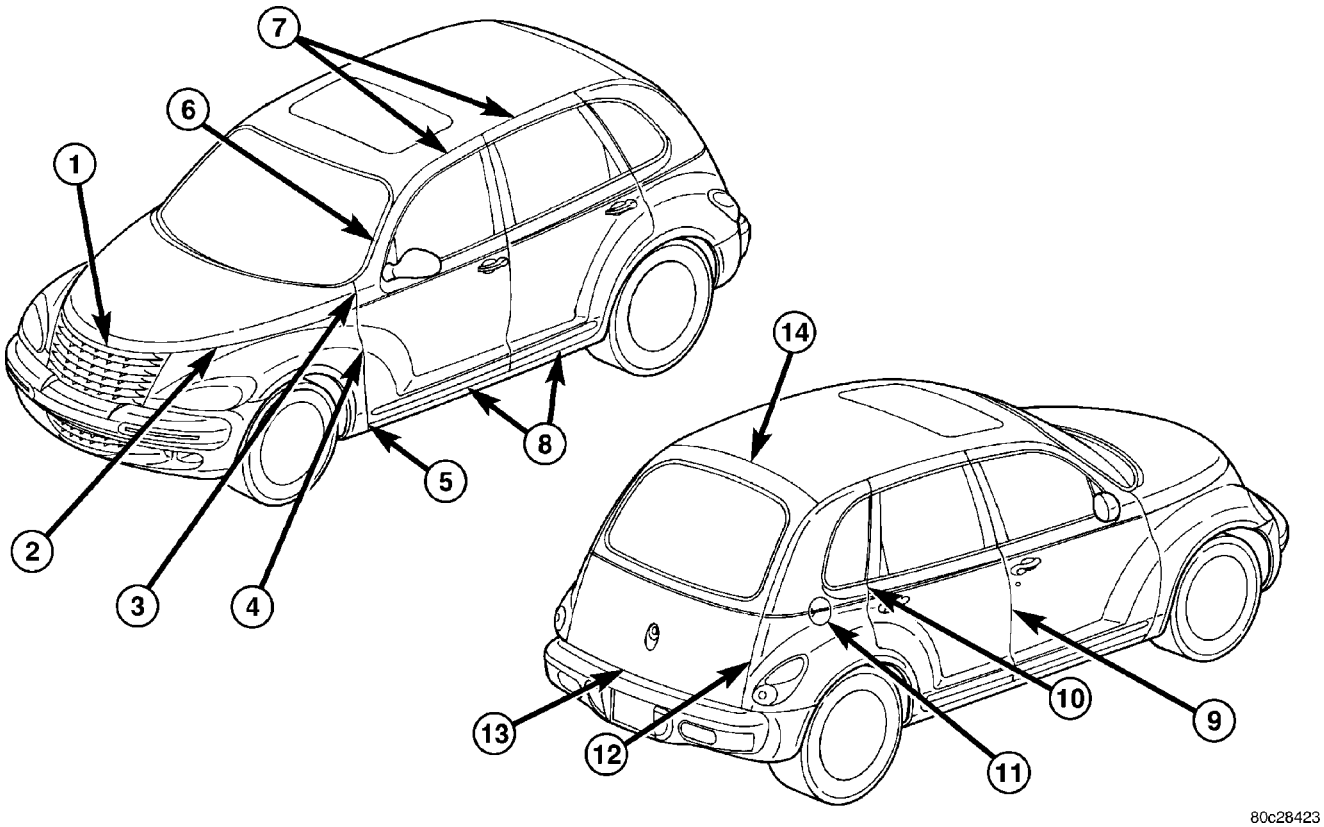

Fig. 1 BODY GAP AND FLUSH

	LOCATION	GAP	FLUSH
1	Hood to Grille	// within 2.0	Grille Ends 5.0 Grille Center 7.0
2	Hood to Fender	6.0 ± 1.0 // 1.0	Under flush ± 1.5 Fender Front Overflush 1.5 ± 1.0 Fender Middle & Rear ± 1.0
3	Hood to Door	5.0 ± 1.0 // 1.0	Consistent Within 1.0 ± 1.5 Consistent within 1.0
4	Front Door to Fender	5.0 ± 1.0 // 1.0	+0.5 -1.5 Lower Area Underflush 1.0 ± 1.0 Consistent within 1.0
	Fender to Sill	4.5 ± 1.5 // 1.0	± 1.0
6	Front Door To Windshield Molding (A-Pillar)	5.0 ± 1.75 // 1.0	± 1.0 Consistent Within 1.0
7	Front & Rear Door to Roof	6.0 ± 1.5 // 1.0	Overflush 2.0 ± 2.0 // 1.5
8	Front & Rear Door To Sill	6.0 ± 1.5 // 1.0	Underflush 1.0 ± 1.0
9	Front Door to Rear Door	4.5 ± 1.0 // 1.0	Excluding Door Header ± 1.5 Door Header ± 1.0
10	Rear Door to Body Side	4.5 ± 1.0 // 1.0	Front Door Lower Area Overflush 1.0 ± 1.0 Consistent Within 1.0 ± 1.0 Consistent Within 1.0
11	Body Side to Fuel Filler	3.0 ± 1.0 Consistent Within 1.0	Body Side 0.5 Overflush ± 0.75
12	Liftgate to Body Side	4.0 ± 1.0 // 1.0	Liftgate Underflush 1.0 ± 1.0 Consistent Within 1.0
13	Liftgate to Rear Fascia	7.0 ± 1.5 // 1.5	N/A
14	Liftgate to Roof	8.0 ± 1.5 // 1.5	Liftgate Underflush 1.0 +1.0 -2.0 Consistent Within 1.5

NOTE:
NOTE: ALL MEASUREMENTS ARE IN mm

OPENING DIMENSIONS

SPECIFICATIONS - BODY OPENING DIMENSION

INDEX

DESCRIPTION	FIGURE
DOOR OPENINGS	2
WINDSHIELD OPENINGS	3
REAR WINDOW AND LIFTGATE OPENINGS	4

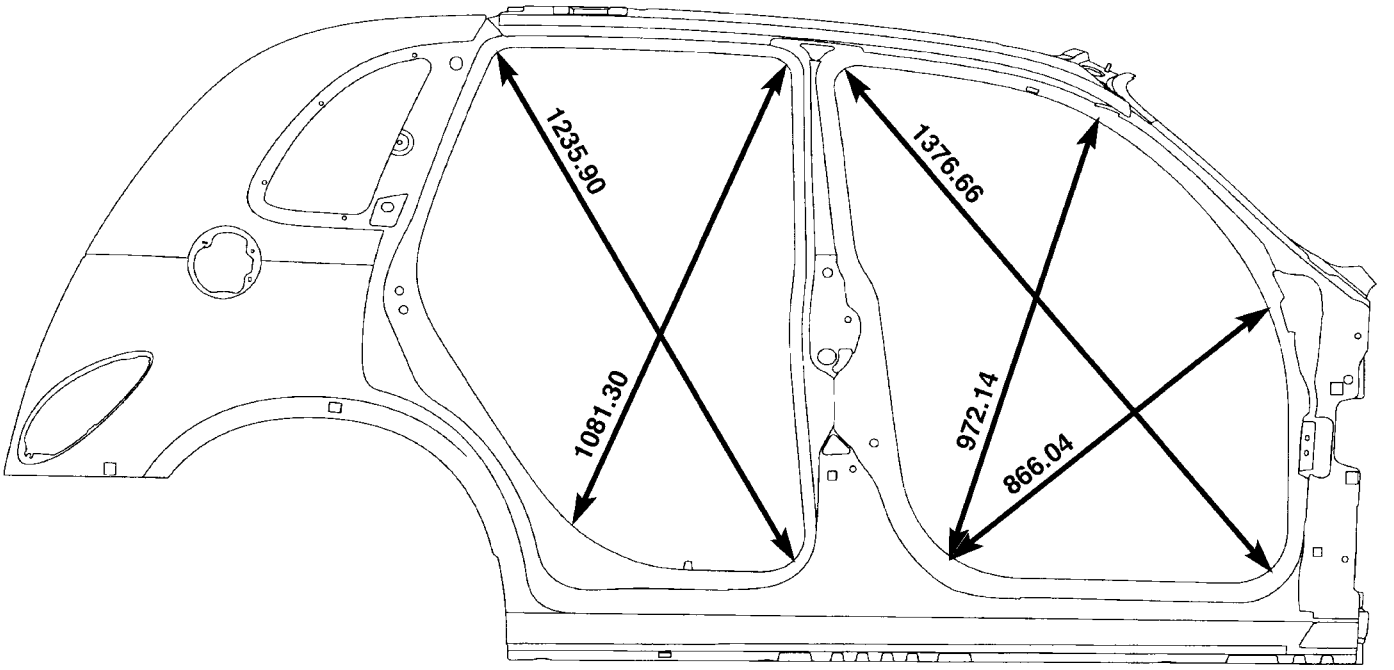

Fig. 2 DOOR OPENINGS

OPENING DIMENSIONS (Continued)

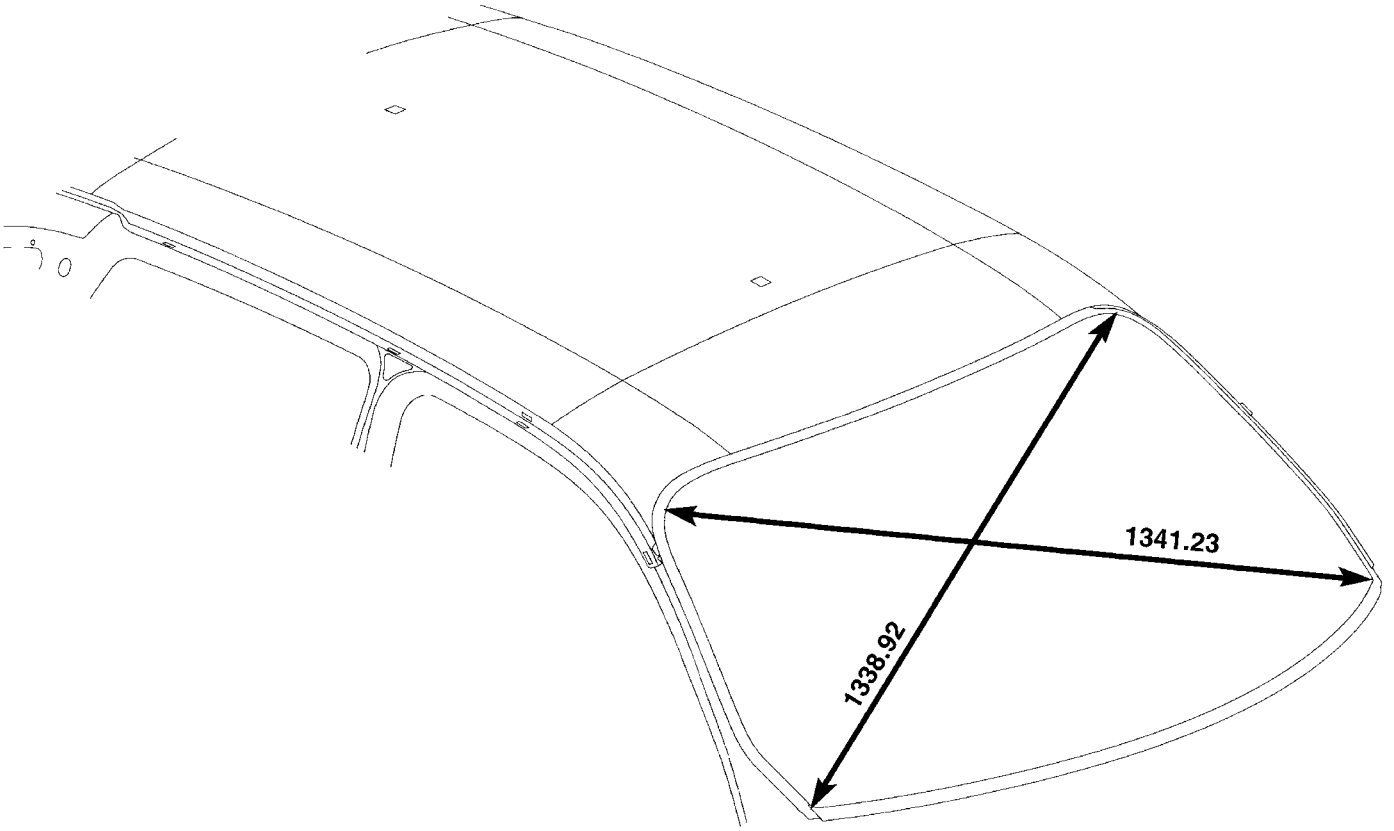

80c4da55

Fig. 3 WINDSHIELD OPENINGS

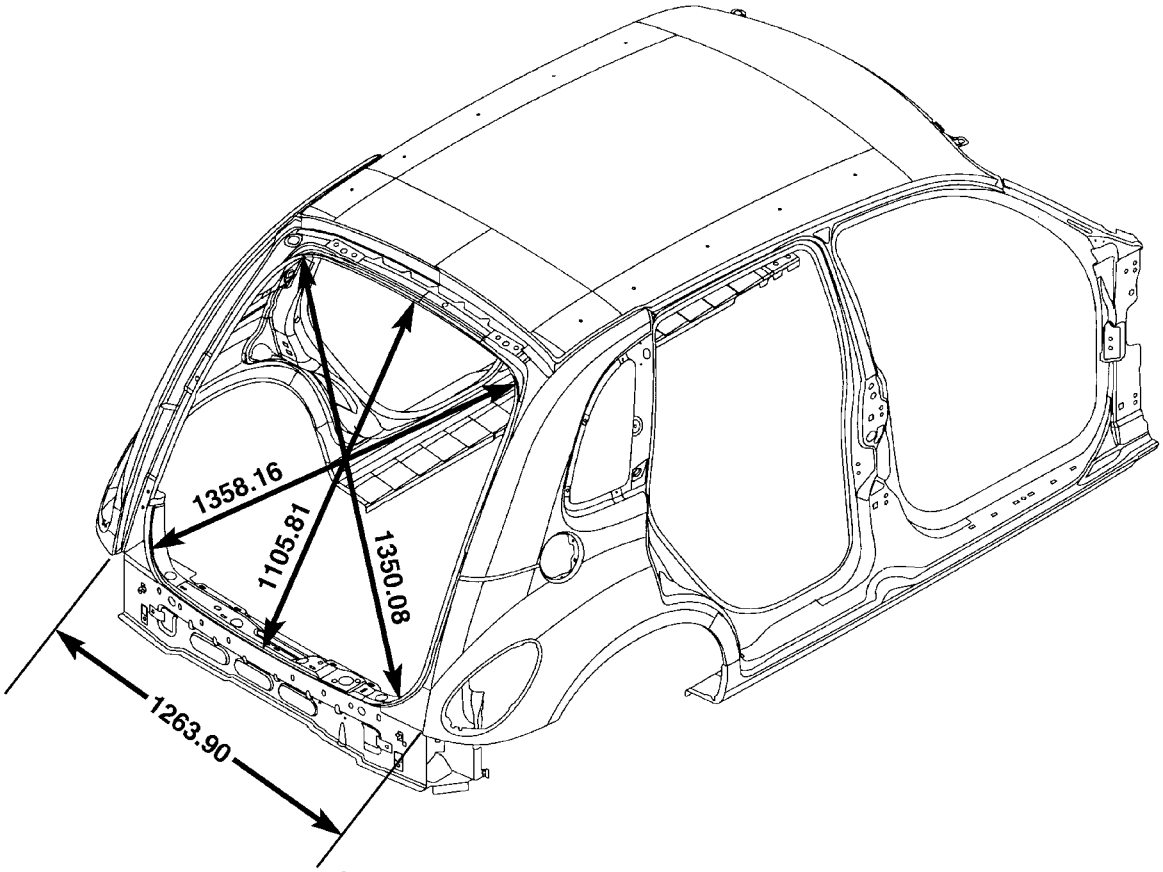

80c4da57

Fig. 4 REAR WINDOW AND LIFTGATE OPENINGS

SEALER LOCATIONS

SPECIFICATIONS - BODY SEALING LOCATIONS

INDEX

DESCRIPTION	FIGURE
BODY LOCATIONS	5
LOAD BEAM, STRUT TOWER, COWL and DASH PANEL	6
COWL and DASH PANEL	7
FLOOR PAN and DASH PANEL	8
ROOF	9
INNER WHEELHOUSE	10
COWL PLENUM	11
COWL and COWL PLENUM	12
COWL PLENUM and DASH PANEL	13
COWL SIDE	14
BODY SIDE APERTURE	15
BODY SIDE QUARTER PANEL APERTURE	16
REAR FLOOR PAN	17
CARGO AREA	18

SEALER LOCATIONS (Continued)

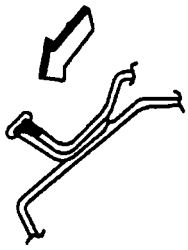

HOLD GUN NOZZLE IN DIRECTION OF ARROW IN ORDER TO EFFECTIVELY SEAL METAL JOINTS.

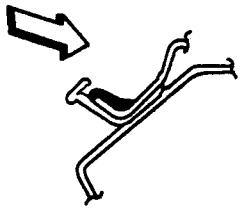

DO NOT HOLD GUN NOZZLE IN DIRECTION OF ARROW. SEALER APPLIED AS SHOWN IS INEFFECTIVE.

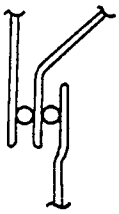

3 METAL THICKNESS

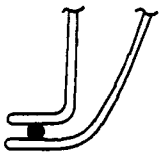

2 METAL THICKNESS

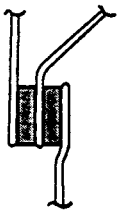

3 METAL THICKNESS

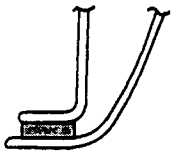

2 METAL THICKNESS

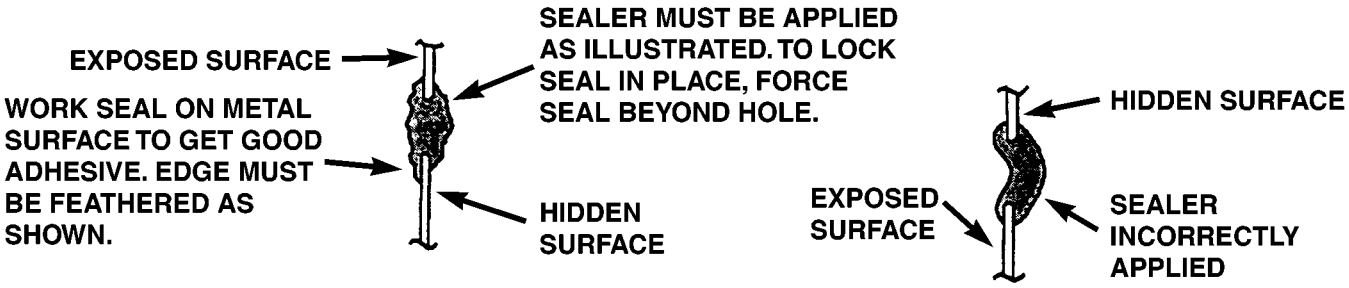

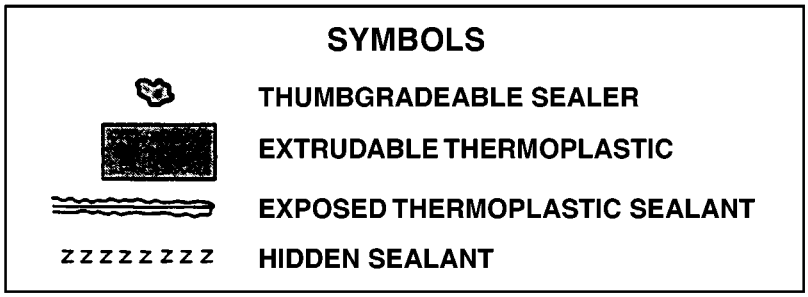

80866cc6

Fig. 5 BODY LOCATIONS

SEALER LOCATIONS (Continued)

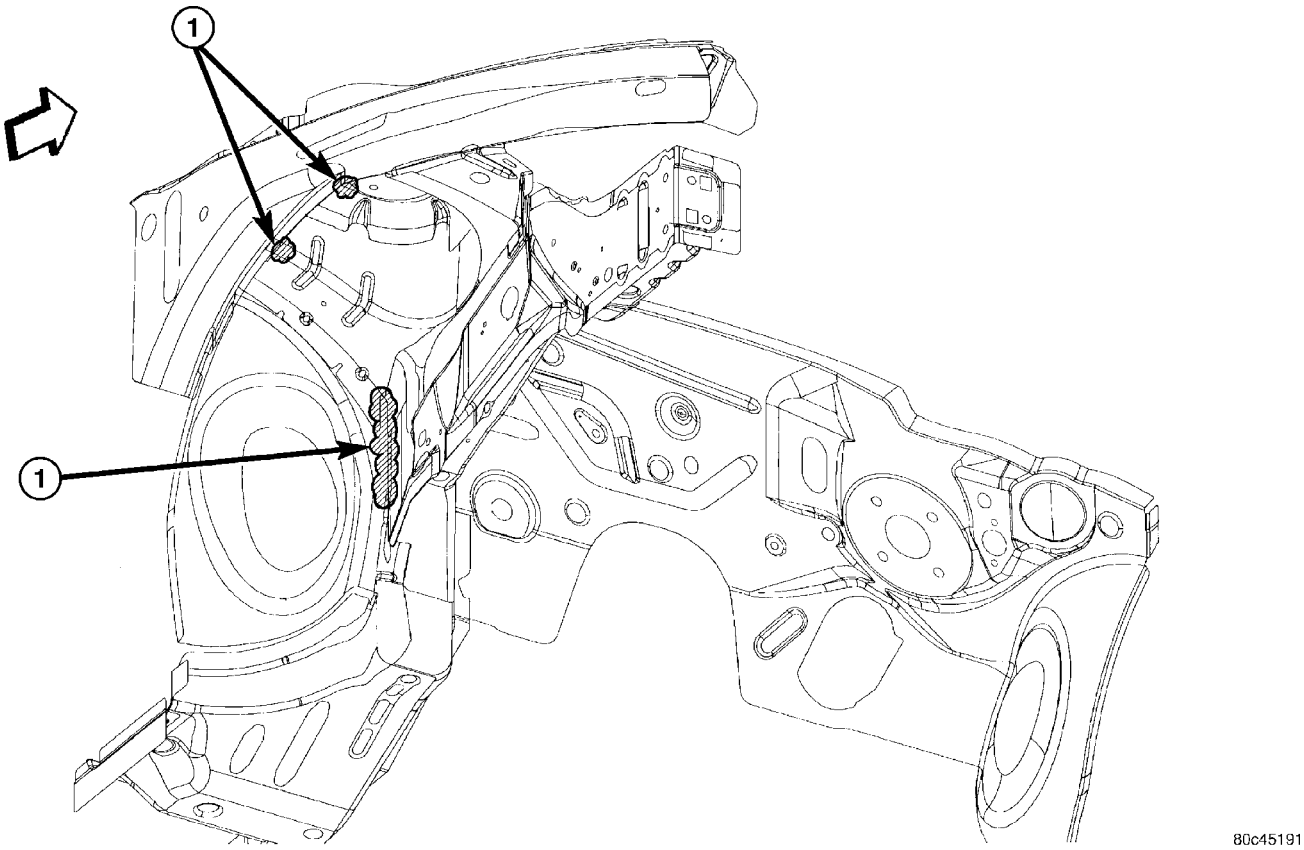

Fig. 6 LOAD BEAM, STRUT TOWER, COWL and DASH PANEL

1 - THUMBGRADE SEALER

SEALER LOCATIONS (Continued)

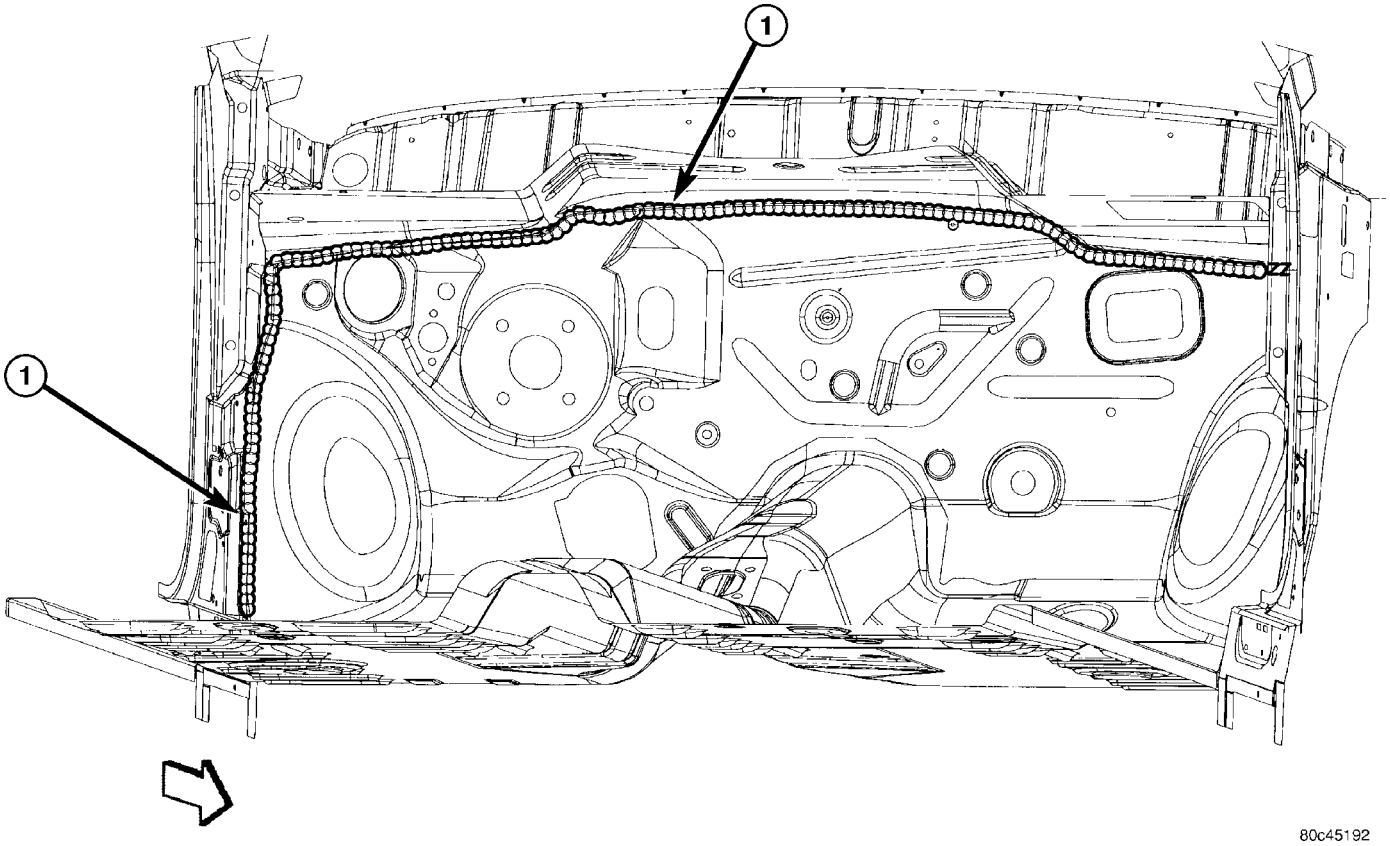

Fig. 7 COWL and DASH PANEL

1 - SPRAYABLE NON-PAINTABLE SEALER

SEALER LOCATIONS (Continued)

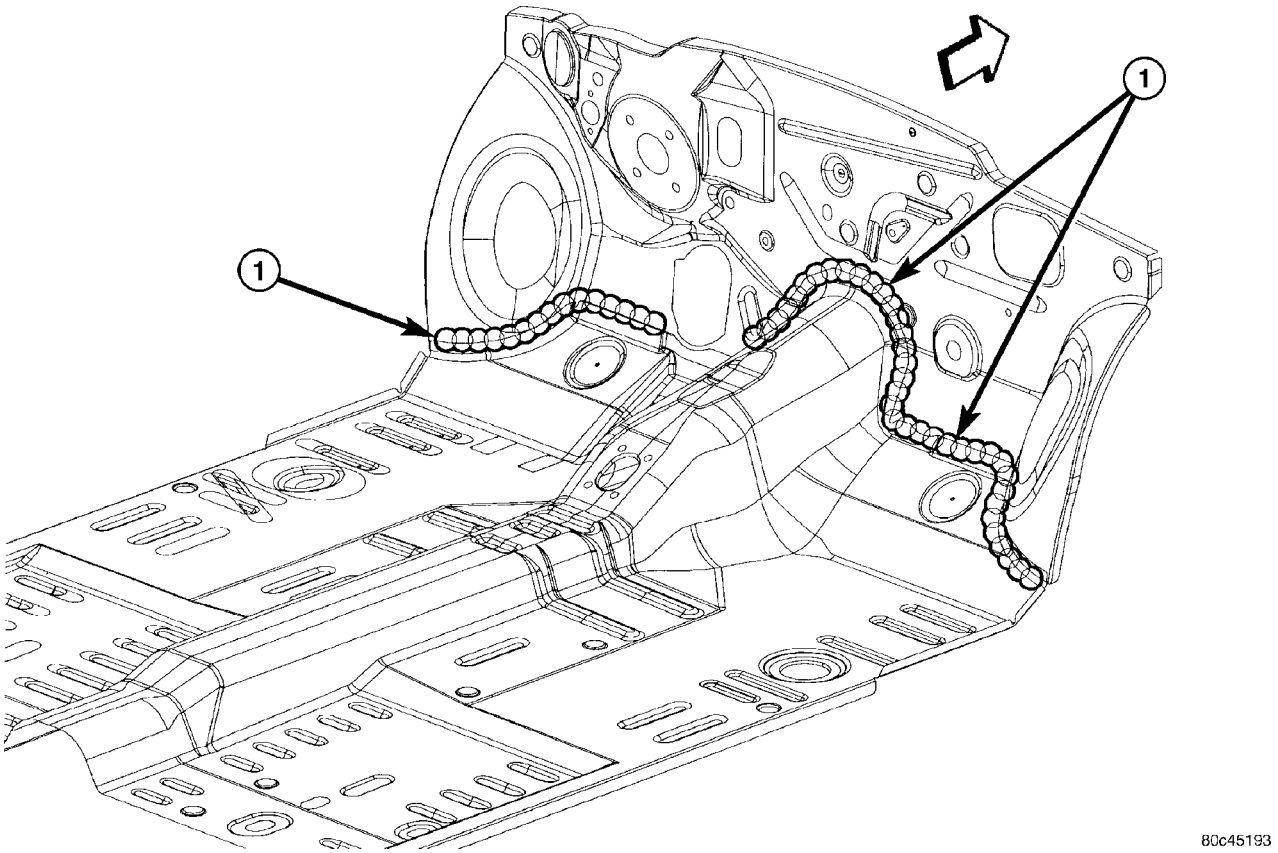

Fig. 8 FLOOR PAN and DASH PANEL

1 - SPRAYABLE NON-PAINTABLE SEALER

SEALER LOCATIONS (Continued)

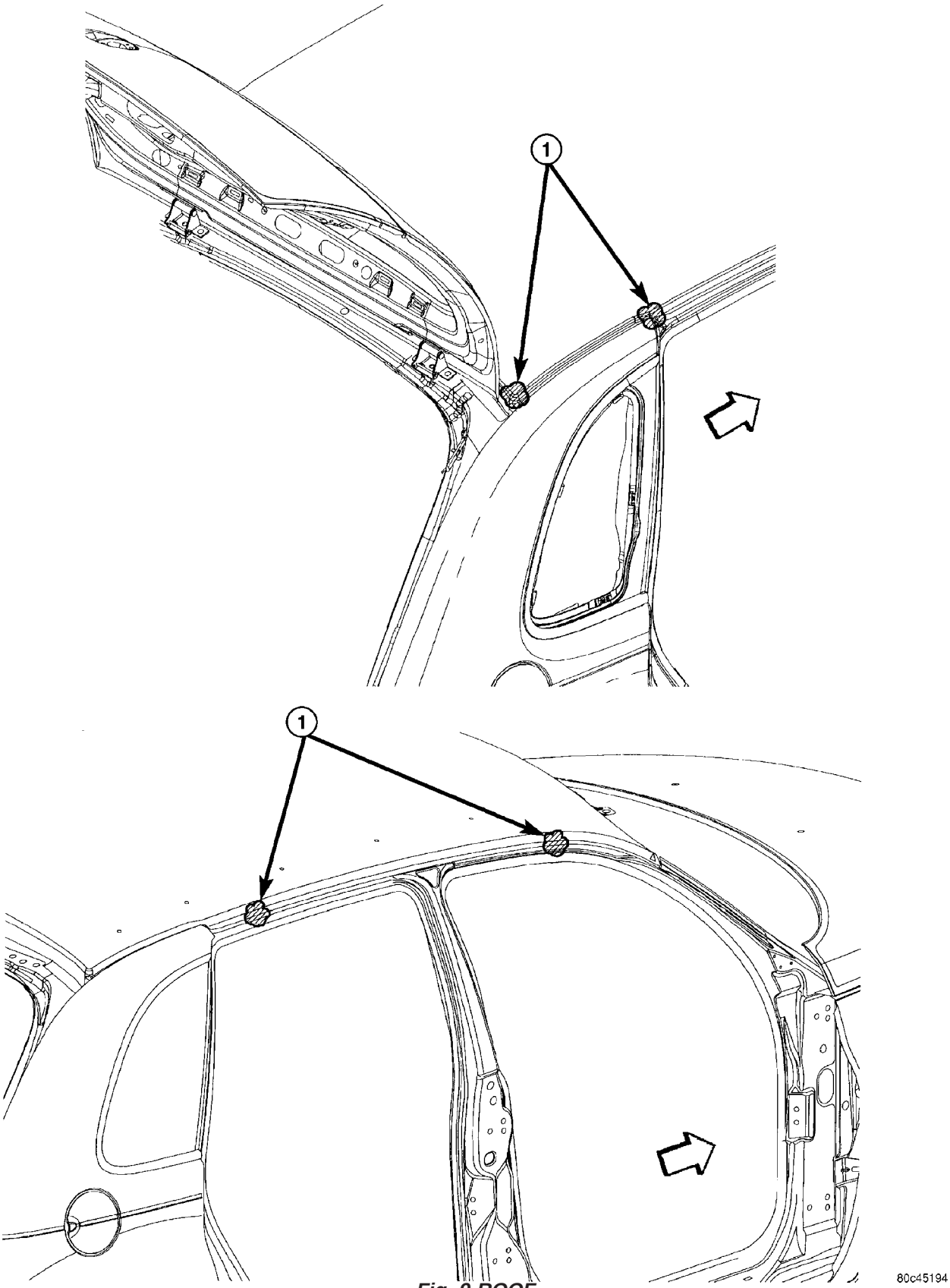

Fig. 9 ROOF

1 - THUMBGRADE SEALER

SEALER LOCATIONS (Continued)

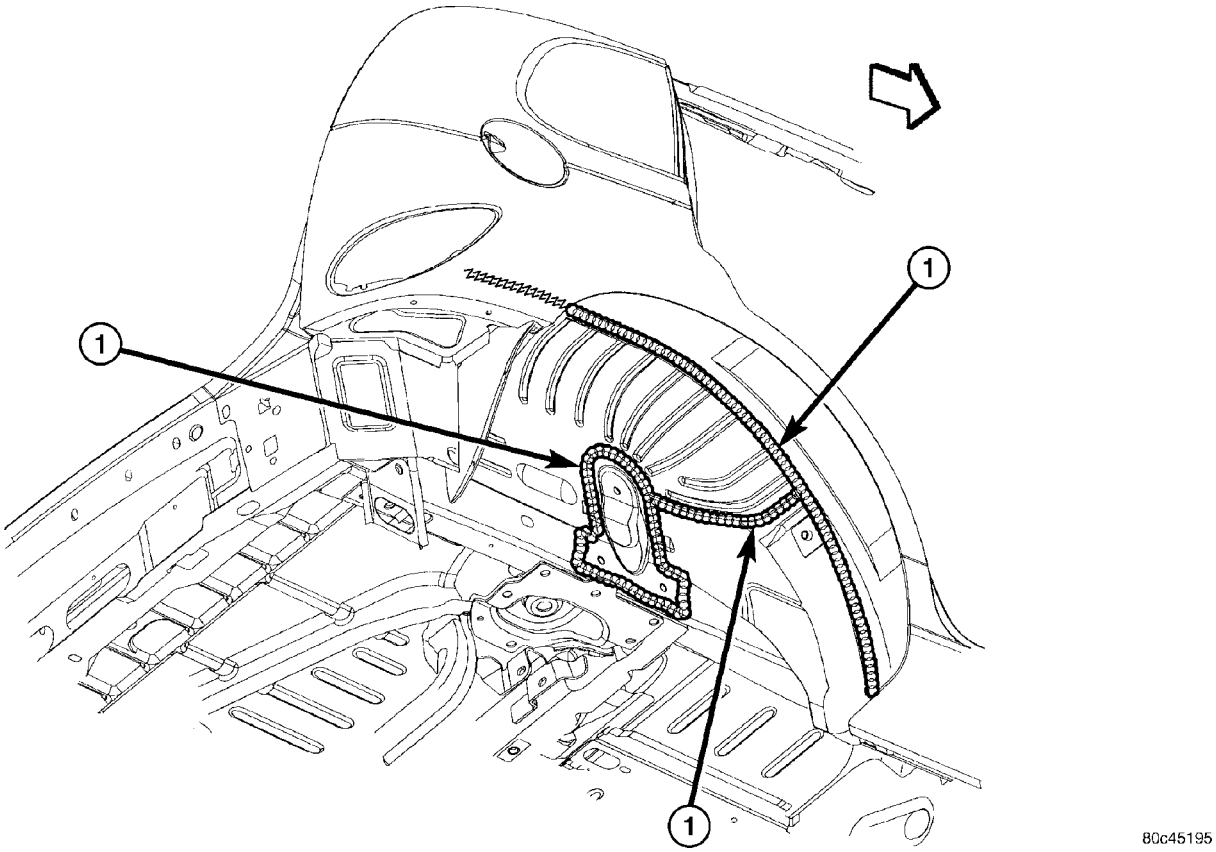

Fig. 10 INNER WHEELHOUSE

1 - SPRAYABLE NON-PAINTABLE SEALER

SEALER LOCATIONS (Continued)

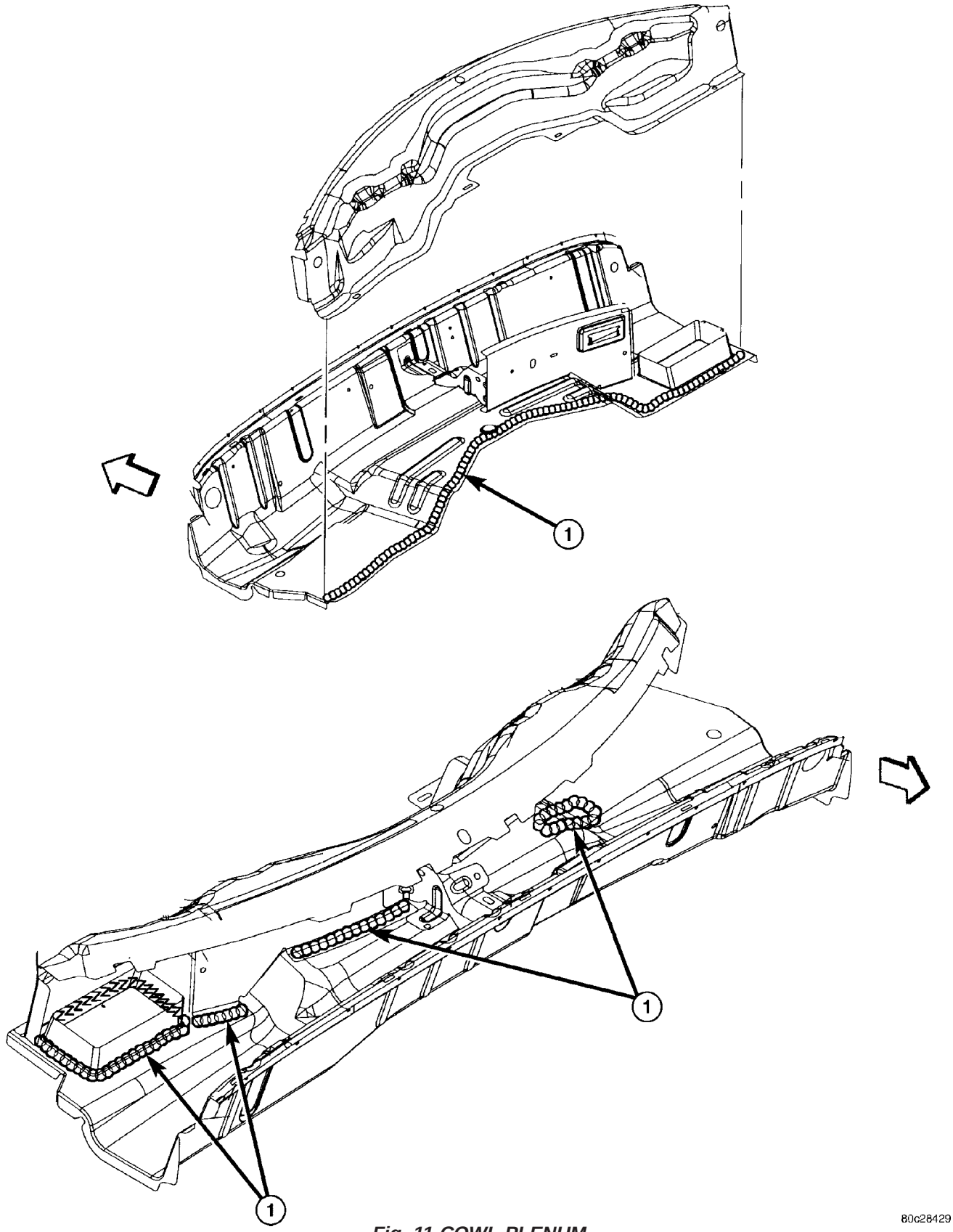

Fig. 11 COWL PLENUM

1 - PUMPABLE SEALER

SEALER LOCATIONS (Continued)

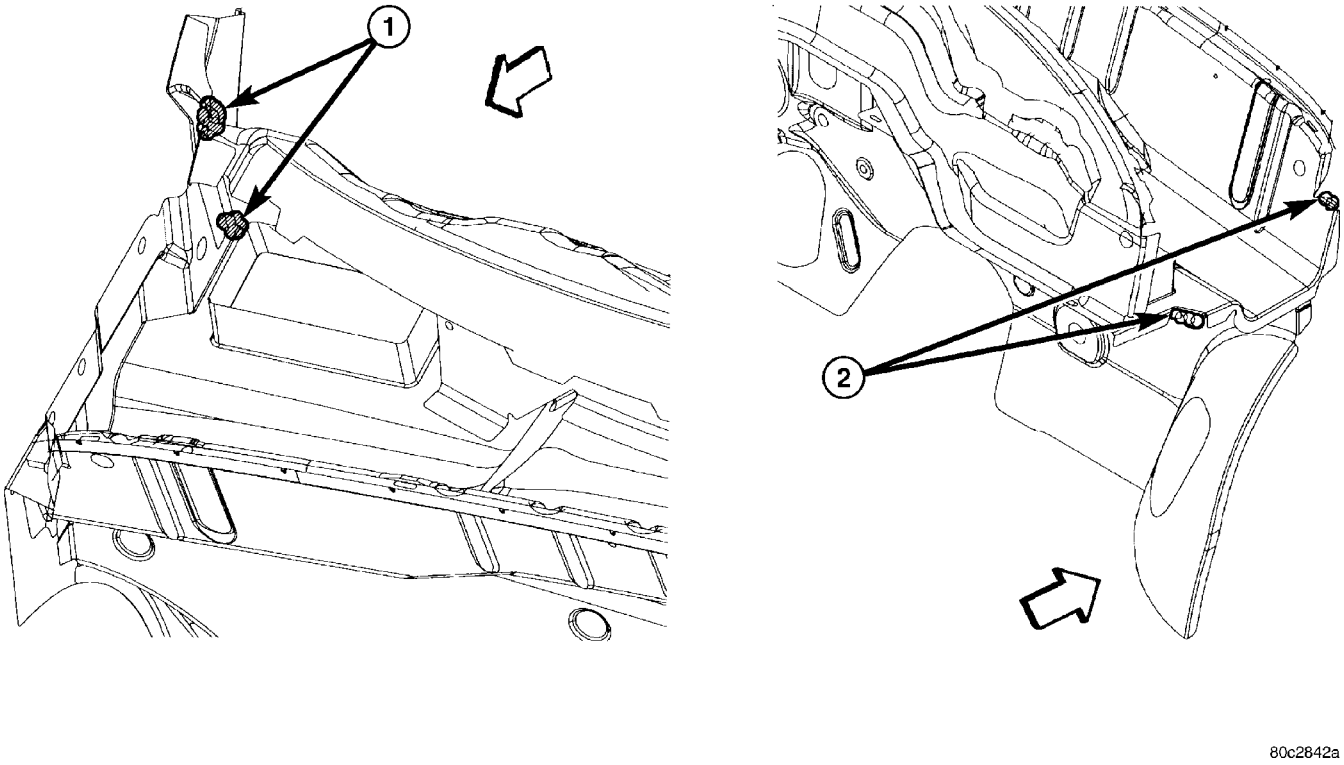

Fig. 12 COWL and COWL PLENUM

1 - NON-EXPANDABLE THUMBGRADE SEALER
2 - EXPANDABLE SEALER TAPE

SEALER LOCATIONS (Continued)

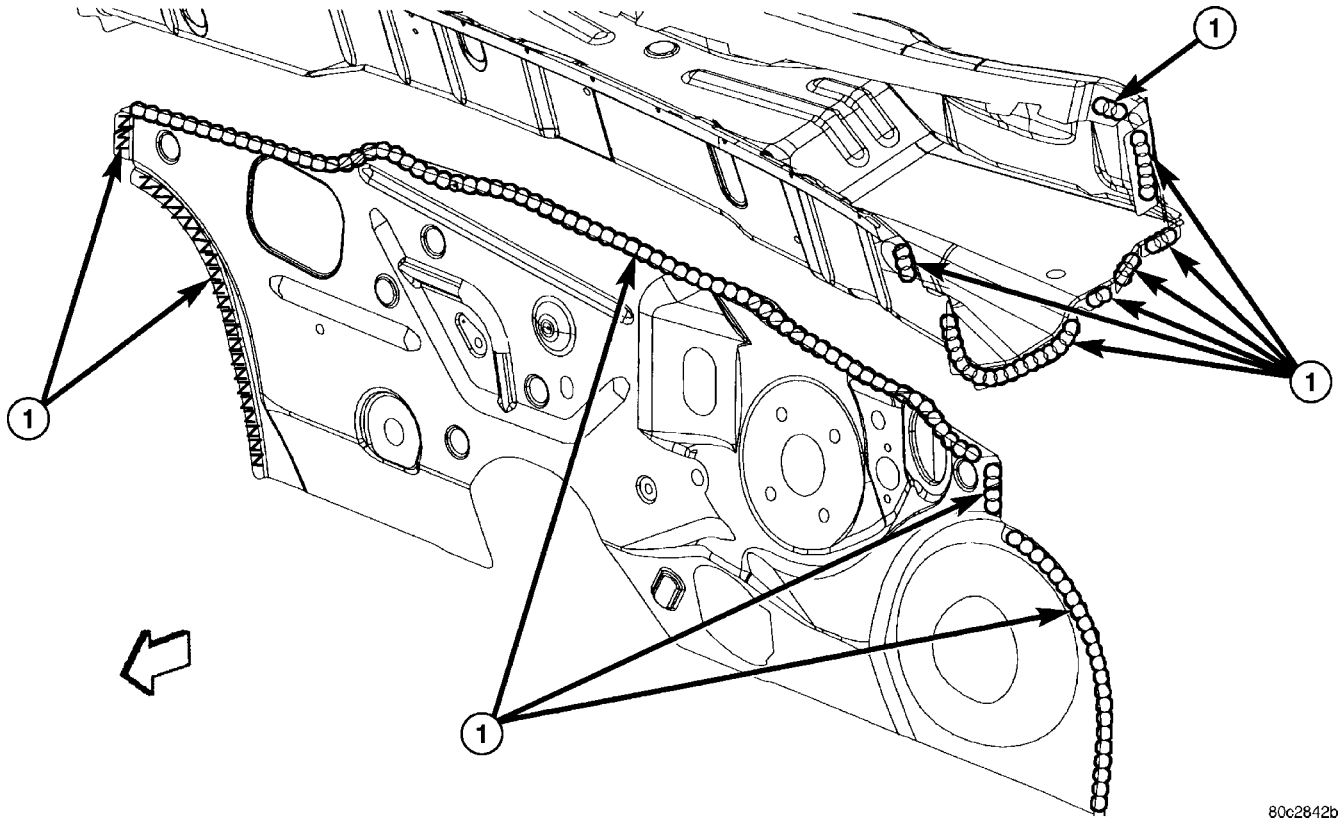

Fig. 13 COWL PLENUM and DASH PANEL

1 - EXPANDABLE SEALER

SEALER LOCATIONS (Continued)

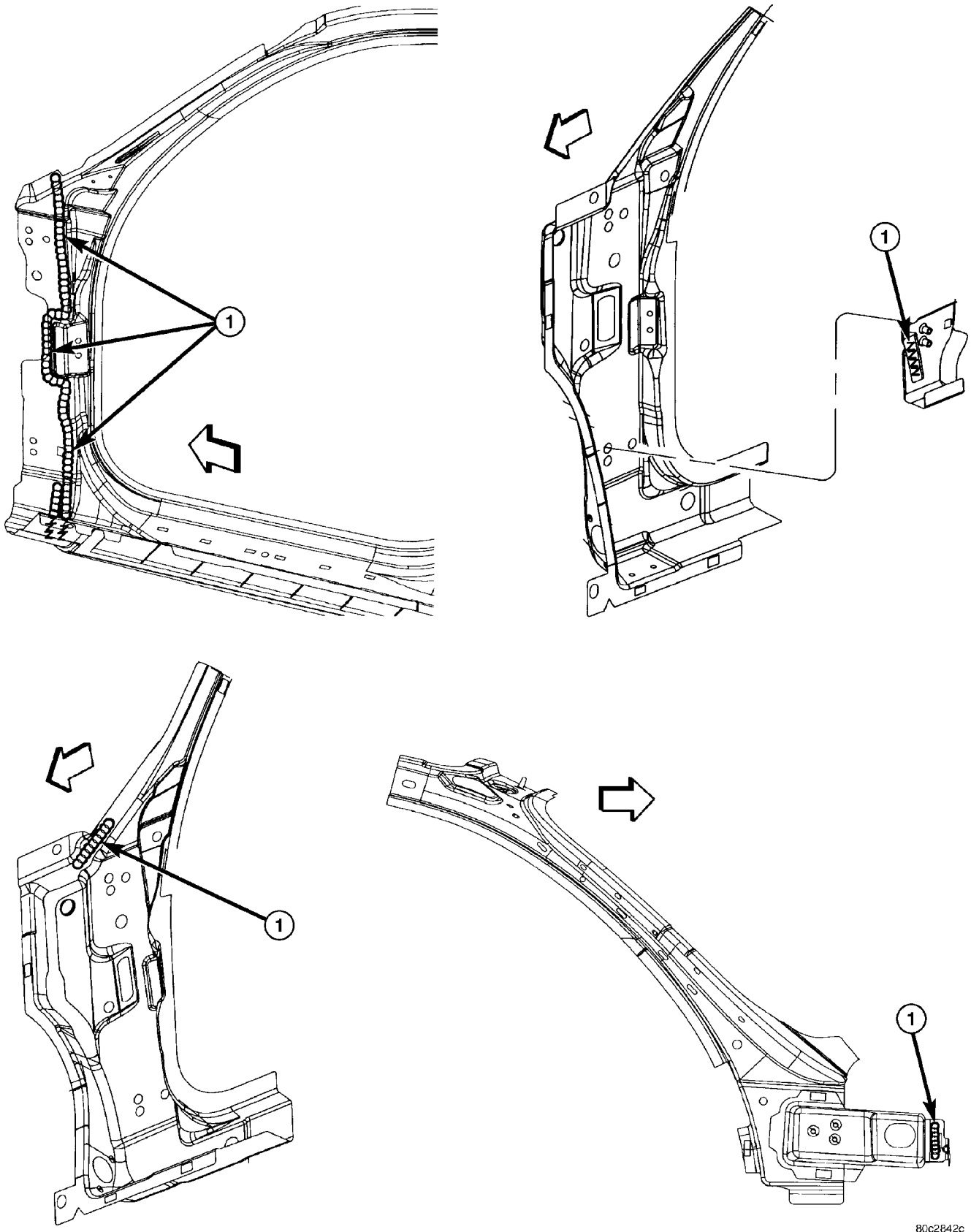

Fig. 14 COWL SIDE

1 - PUMPABLE SEALER

SEALER LOCATIONS (Continued)

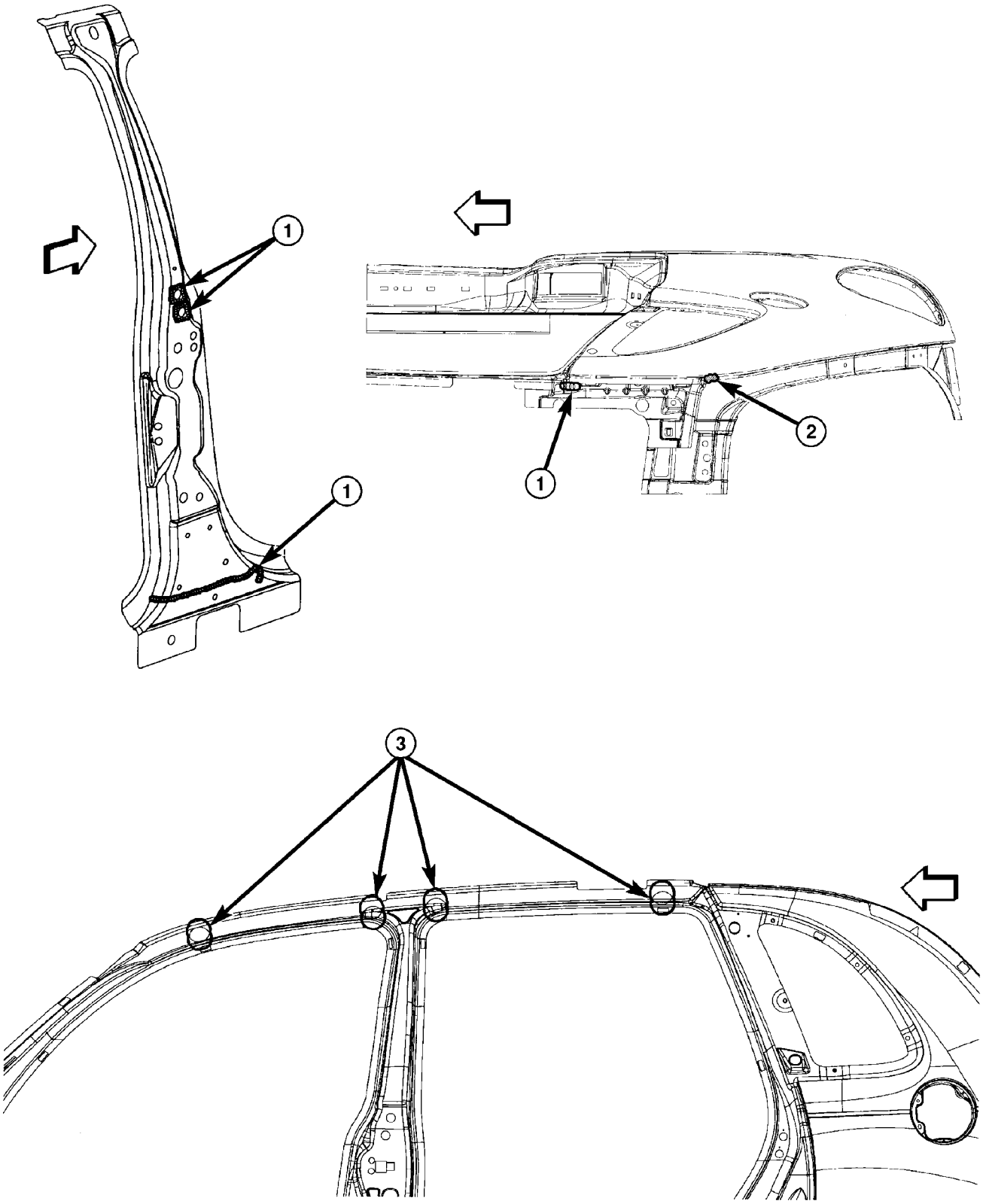

Fig. 15 BODY SIDE APERTURE

1 - SEALER TAPE
2 - THUMBGRADE SEALER
3 - PUMPABLE SEALER

SEALER LOCATIONS (Continued)

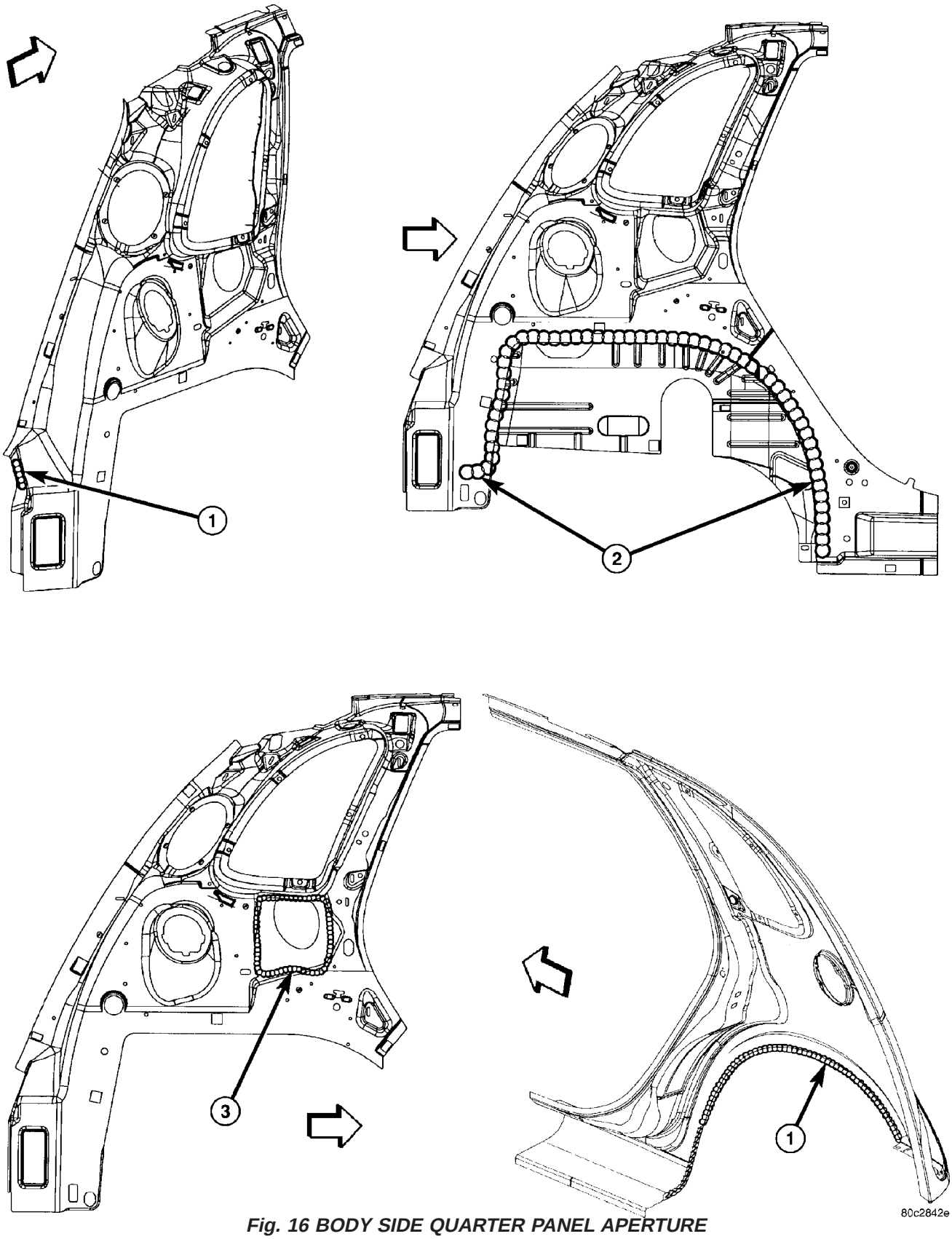

Fig. 16 BODY SIDE QUARTER PANEL APERTURE

1 - PUMPABLE SEALER
2 - EXPANDABLE BEAD SEALER
3 - SEALER TAPE

SEALER LOCATIONS (Continued)

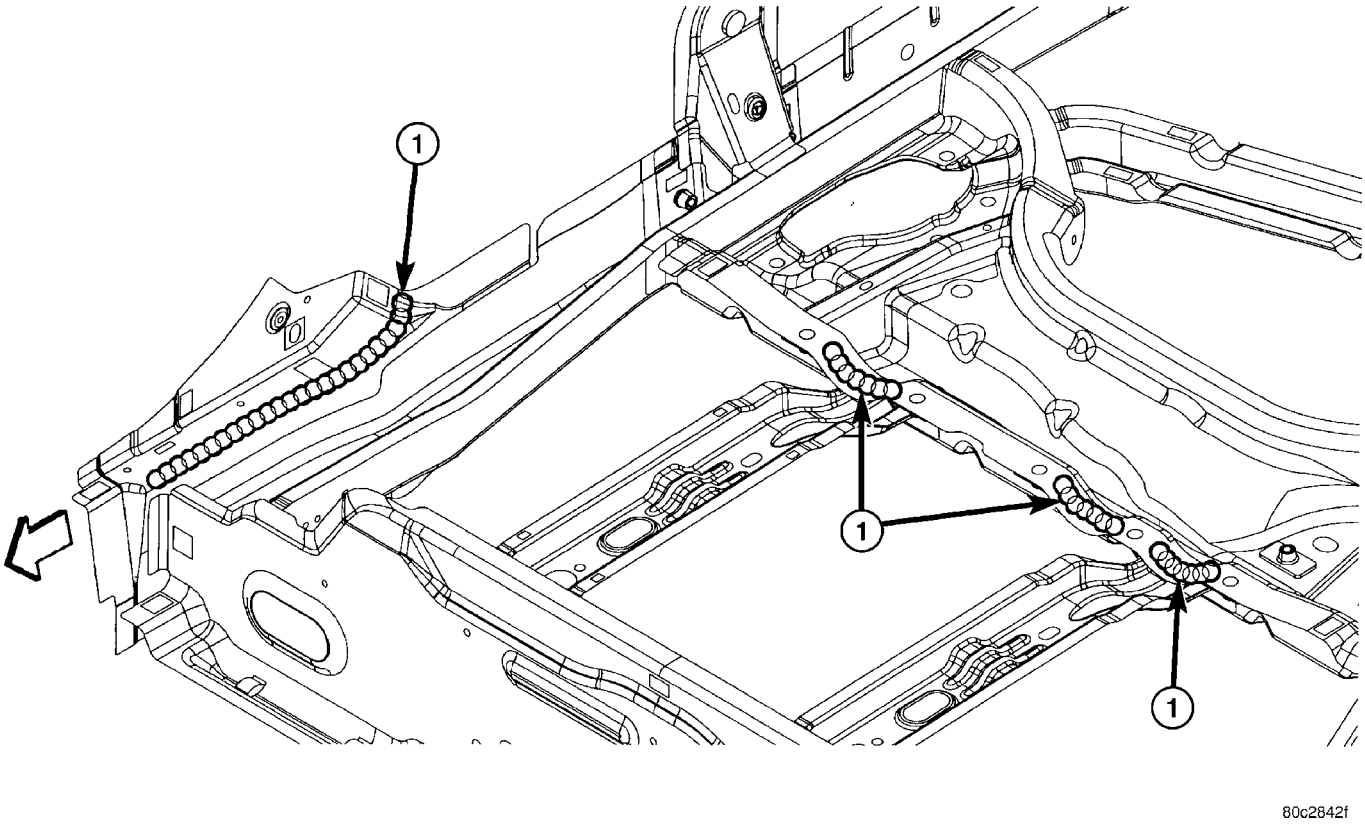

Fig. 17 REAR FLOOR PAN

1 - PUMPABLE SEALER

SEALER LOCATIONS (Continued)

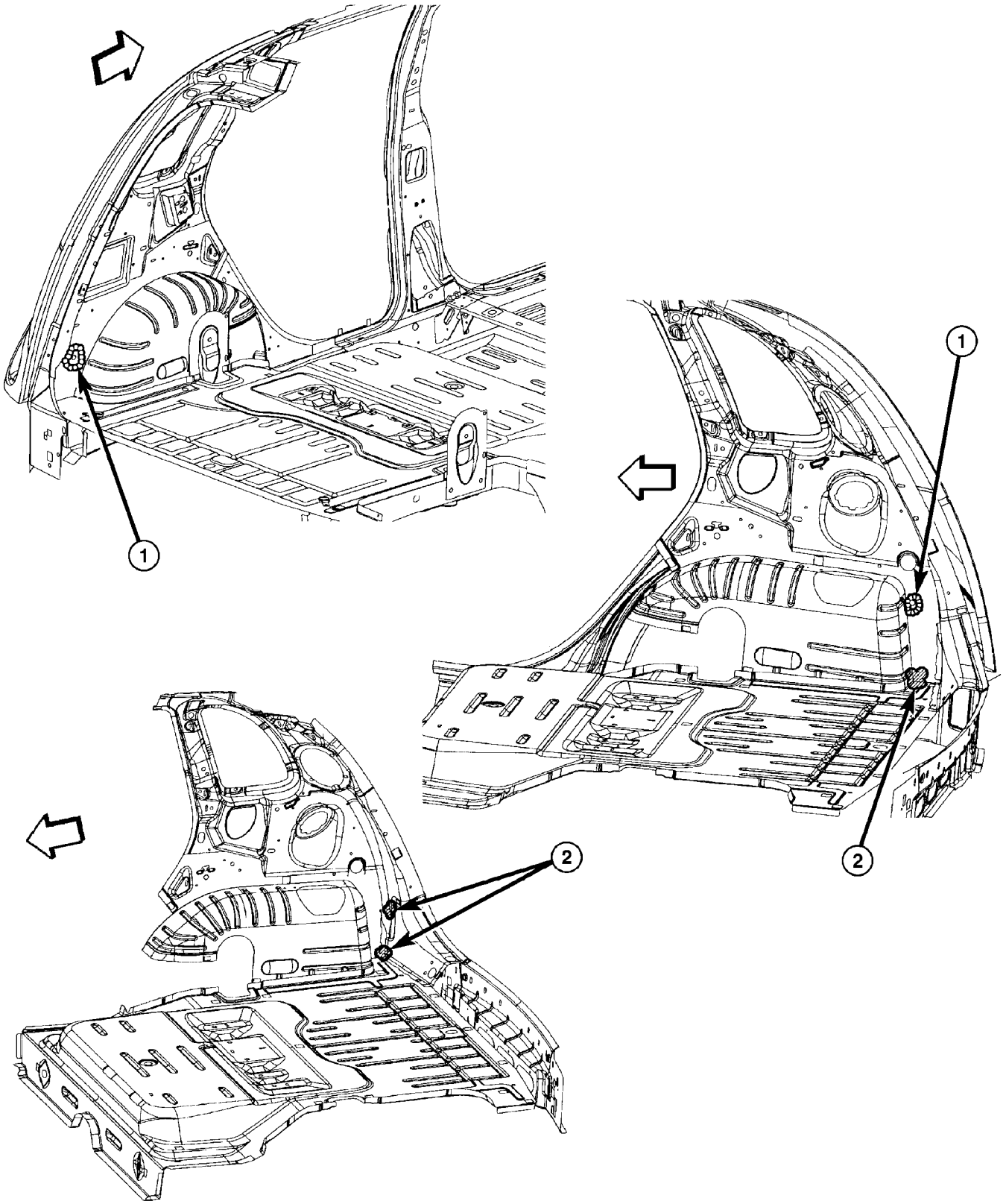

Fig. 18 CARGO AREA

1 - SEALER TAPE
2 - THUMBGRADE SEALER

STRUCTURAL ADHESIVE LOCATIONS

SPECIFICATIONS - STRUCTURAL ADHESIVES

INDEX

DESCRIPTION	FIGURE
COWL SIDE AND LOAD BEAM	19
DASH PANEL AND FLOOR PAN	20
REAR FLOOR PAN	21
BODY SIDE APERTURE	22

STRUCTURAL ADHESIVE LOCATIONS (Continued)

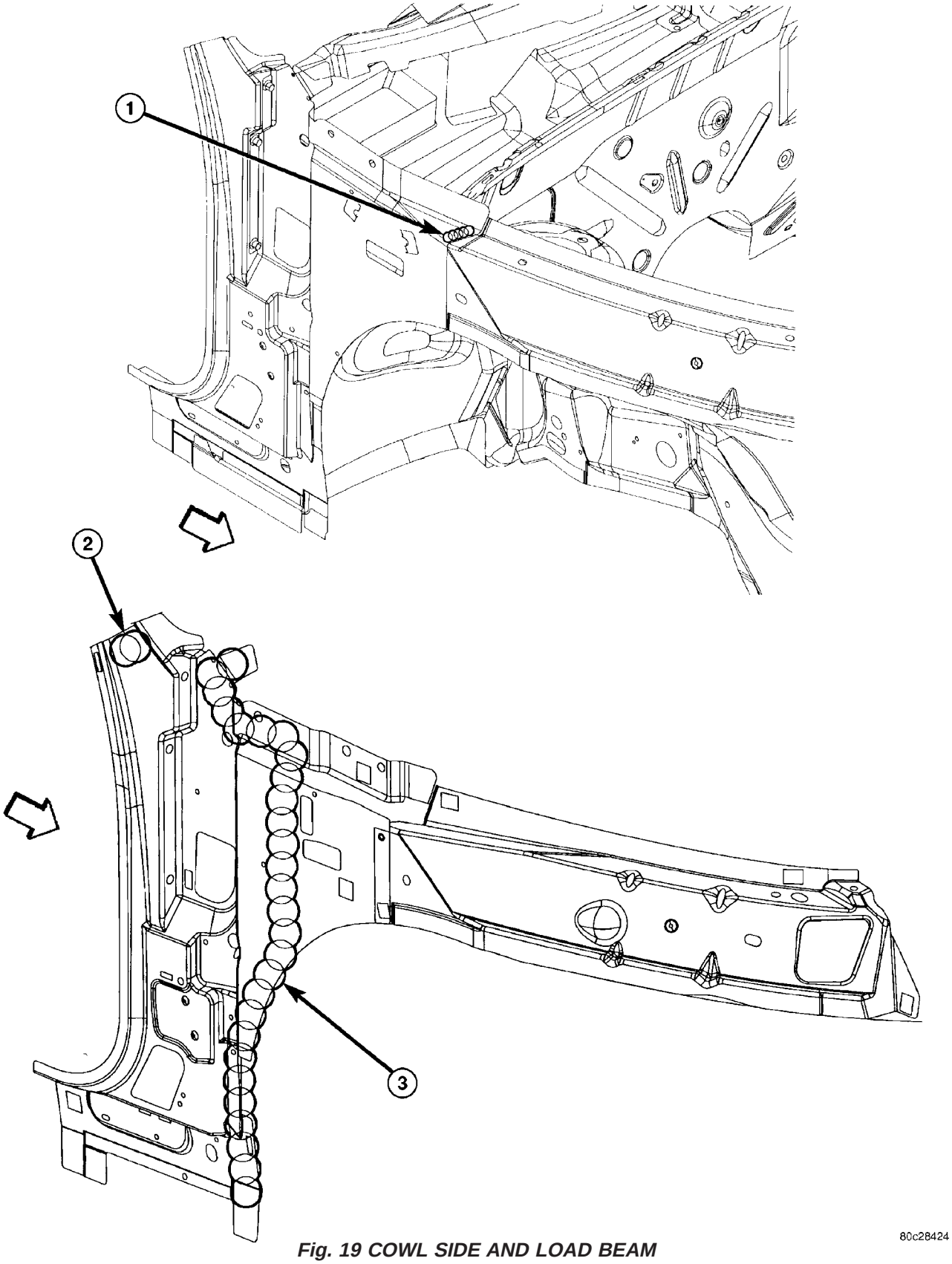

Fig. 19 COWL SIDE AND LOAD BEAM

1 - STRUCTURAL ADHESIVE TAPE
2 - EXPANDABLE SEALER
3 - ADHESIVE STRIP BEAD

STRUCTURAL ADHESIVE LOCATIONS (Continued)

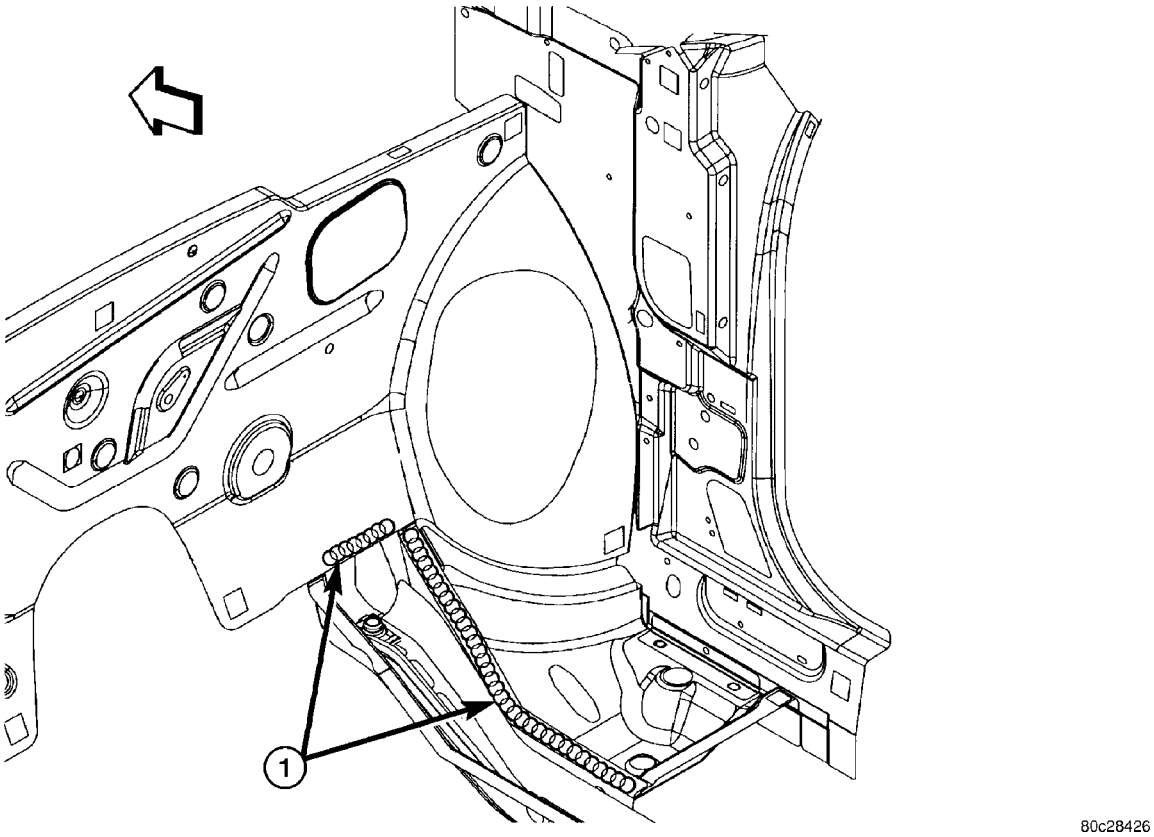

Fig. 20 DASH PANEL AND FLOOR PAN

1 - STRUCTURAL ADHESIVE TAPE

STRUCTURAL ADHESIVE LOCATIONS (Continued)

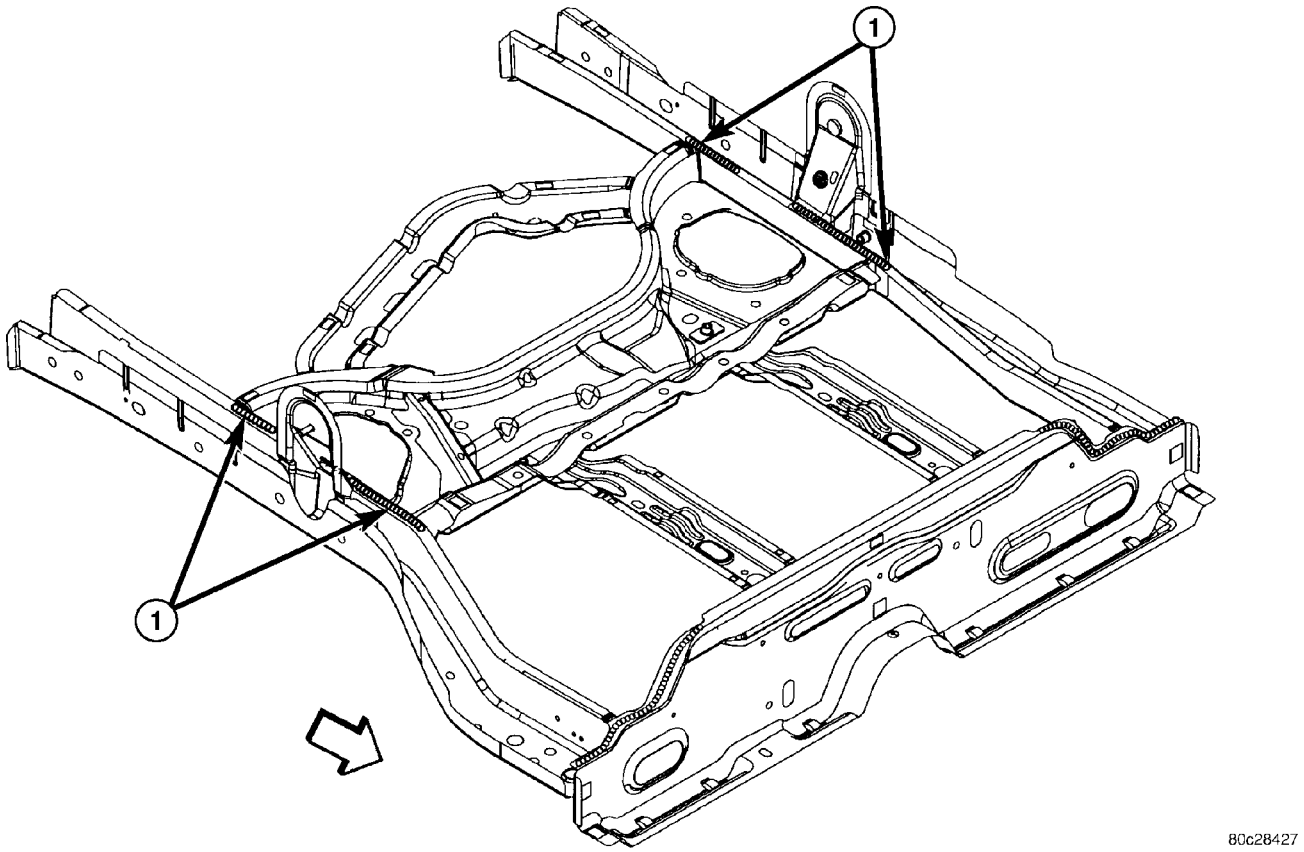

Fig. 21 REAR FLOOR PAN

1 - STRUCTURAL ADHESIVE TAPE

STRUCTURAL ADHESIVE LOCATIONS (Continued)

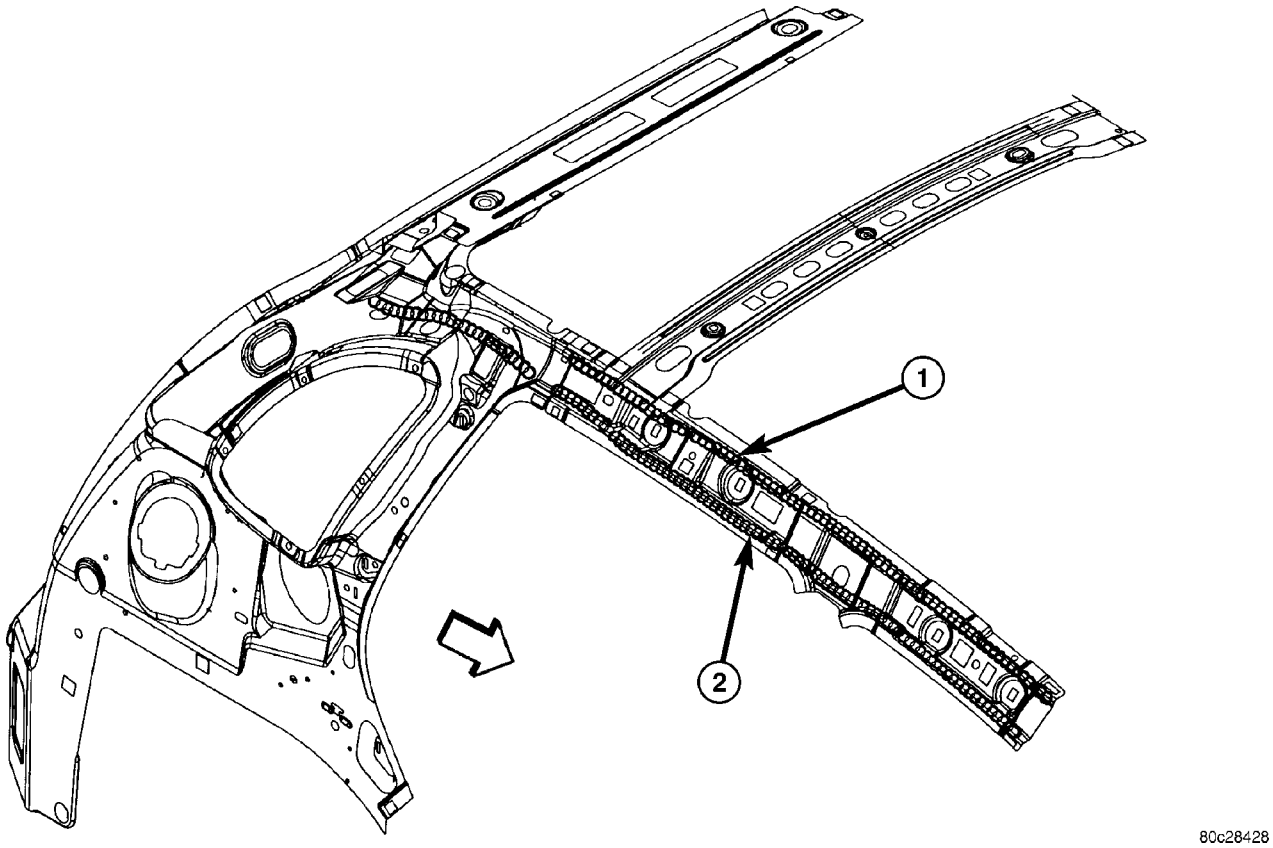

Fig. 22 BODY SIDE APERTURE

1 - PUMPABLE ADHESIVE
2 - STRUCTURAL ADHESIVE

WELD LOCATIONS

SPECIFICATIONS - WELD LOCATIONS

INDEX

DESCRIPTION	FIGURE
HEADLAMP CLOSURE PANEL AND HINGE PILLAR REINFORCEMENT	23
UPPER WINDSHIELD FRAME, ROOF BOWS, LIFTGATE ROOF FRAME TO BODY, SIDE APERTURE	24
OUTER ROOF PANEL TO BODY SIDE APERTURE WINDSHIELD FRAME AND LIFTGATE	25
FRONT SIDE RAIL REAR TO DASH AND COWL SIDE PANELS	26
RADIATOR CLOSURE TO UPPER LOAD BEAM AND FRONT SIDE RAIL ASSEMBLY	27
STRUT TOWER TO DASH PANEL	28
RADIATOR CLOSURE PLANE BRACE TO UPPER RADIATOR CROSSMEMBER BRACE	29
COWL TOP TO COWL PLENUM	30
COWL PLENUM TO DASH PANEL	31
COWL PLENUM TO COWL SIDE PANEL	32
OUTER LOAD BEAM TO COWL SIDE PANEL	33
INNER LOAD BEAM TO STRUT TOWER AND COWL SIDE PANEL	34
WINDSHIELD WIPER REINFORCEMENT GUSSET	35
INSTRUMENT PANEL REINFORCEMENT TO COWL SIDE PANEL	36
COWL PLENUM WATER DEFLECTOR TO COWL PLENUM PANEL	37
LEFT WINDSHIELD WIPER ATTACHING BRACKET TO COWL PLENUM	38
BRAKE PEDAL SUPPORT BRACKET TO COWL PLENUM	39
FRONT FLOOR PAN TO DASH PANEL AND COWL SIDE PANEL	40
INNER BODY SIDE SILL TO FRONT FLOOR PAN AND FRONT SEAT REINFORCEMENT	41
A-PILLAR WEATHERSTRIP RETAINER TO BODY SIDE APERTURE PANEL	42
LIFTGATE SIDE DRAIN TROUGH TO BODY SIDE APERTURE PANEL	43
INNER ROOF SIDE RAIL REINFORCEMENT TO BODY SIDE APERTURE PANEL	44
FRONT HINGE PILLAR TO BODY SIDE APERTURE PANEL	45
INNER WINDSHIELD SIDE FRAME TO BODY SIDE APERTURE PANEL	46
D-PILLAR UPPER REINFORCEMENT TO BODY SIDE APERTURE PANEL, ROOF RAIL SIDE REINFORCEMENT AND INNER QUARTER PANEL	47
INNER QUARTER PANEL TAIL LAMP REINFORCEMENT TO BODY SIDE APERTURE PANEL	48
INNER QUARTER PANEL TO BODY SIDE APERTURE PANEL	49
LATCH STRIKER REINFORCEMENT TO BODY SIDE APERTURE PANEL	50
B-PILLAR REINFORCEMENT TO BODY SIDE APERTURE PANEL	51
OUTER LOAD BEAM TO FRONT HINGE PILLAR	52
INNER B-PILLAR TO B-PILLAR REINFORCEMENT AND BODY SIDE APERTURE PANEL	53
INNER QUARTER PANEL TO LIFTGATE SIDE DRAIN TROUGH	54

WELD LOCATIONS (Continued)

DESCRIPTION	FIGURE
WINDSHIELD OUTER FRAME AND LOWER HINGE PLATE TO FRONT HINGE PILLAR	55
INNER WINDSHIELD FRAME AND UPPER HINGE BRACKET TO FRONT HINGE PILLAR	56
INNER B-PILLAR TO INNER ROOF SIDE REINFORCEMENT	57
RIGHT AND LEFT INNER WHEELHOUSE TO INNER QUARTER PANEL	58
UPPER INNER C-PILLAR TO INNER QUARTER PANEL	59
UPPER LIFTGATE TO REINFORCEMENT TO LOWER LIFTGATE ROOF FRAME	60
FUEL FILLER HOUSING, SEAT BACK REINFORCEMENT, SEAT BELT ANCHOR AND JACK PANEL REINFORCEMENT TO INNER QUARTER PANEL	61
STRIKER ASSEMBLY TO LOWER LIFTGATE PANEL TO REAR FLOOR PAN CLOSURE PANEL	62
RIGHT AND LEFT REAR FLOOR PAN CLOSURE REINFORCEMENTS TO SPARE TIRE CLOSURE PANEL	63
LOWER LIFTGATE OPENING PANEL TO INNER QUARTER PANEL AND LOWER LIFTGATE PANEL	64
REAR SHOCK MOUNT GUSSET TO REAR SHOCK MOUNT REINFORCEMENT TO REAR FLOOR PAN SIDE REINFORCEMENT	65
CONSOLE MOUNTING BRACKET AND FRONT SEAT REINFORCEMENTS TO FRONT FLOOR PAN	66
LEFT INNER WHEELHOUSE TO REAR FLOOR PAN AND SHOCK MOUNT	67
RIGHT INNER WHEELHOUSE TO REAR FLOOR PAN AND SHOCK MOUNT	68
D.S.I. BEAM TO FRONT FLOOR PAN AND INNER SIDE SILL	69
D.S.I. BEAM TO FRONT FLOOR PAN AND INNER SIDE SILL	70
REAR FLOOR PAN TO REAR CROSSMEMBER AND FUEL TANK SUPPORT - RIGHT SIDE	71
REAR FLOOR PAN TO REAR CROSSMEMBER AND FUEL TANK SUPPORT - LEFT SIDE	72
FRONT FLOOR PAN TO FRONT SIDE RAIL REAR EXTENSION - TYPICAL BOTH SIDES	73
REAR FLOOR PAN SIDE RAIL TO REAR FLOOR PAN CROSSMEMBER AND REAR FLOOR PAN FRONT KICK UP CROSSMEMBER	74
REAR FLOOR PAN, REAR CROSSMEMBER TO REAR SUSPENSION AND FUEL TANK CROSSMEMBER	75
REAR INNER SIDE SILL TO FLOOR PAN SIDE RAIL AND REAR FLOOR PAN FRONT KICK UP CROSSMEMBER	76
REAR FLOOR PAN FRONT KICK UP CROSSMEMBER TO FUEL TANK SUPPORT REINFORCEMENT AND REAR FLOOR PAN SIDE RAILS	77
REAR FLOOR PAN TO INNER BODY SIDE SILL	78
REAR FLOOR PAN TO REAR FLOOR PAN FRONT KICK UP CROSSMEMBER AND FRONT SIDE RAIL REAR EXTENSION	79
REAR FLOOR PAN SIDE RAIL REINFORCEMENT TO REAR FLOOR PAN SIDE RAIL TO REAR SUSPENSION CROSSMEMBER	80

WELD LOCATIONS (Continued)

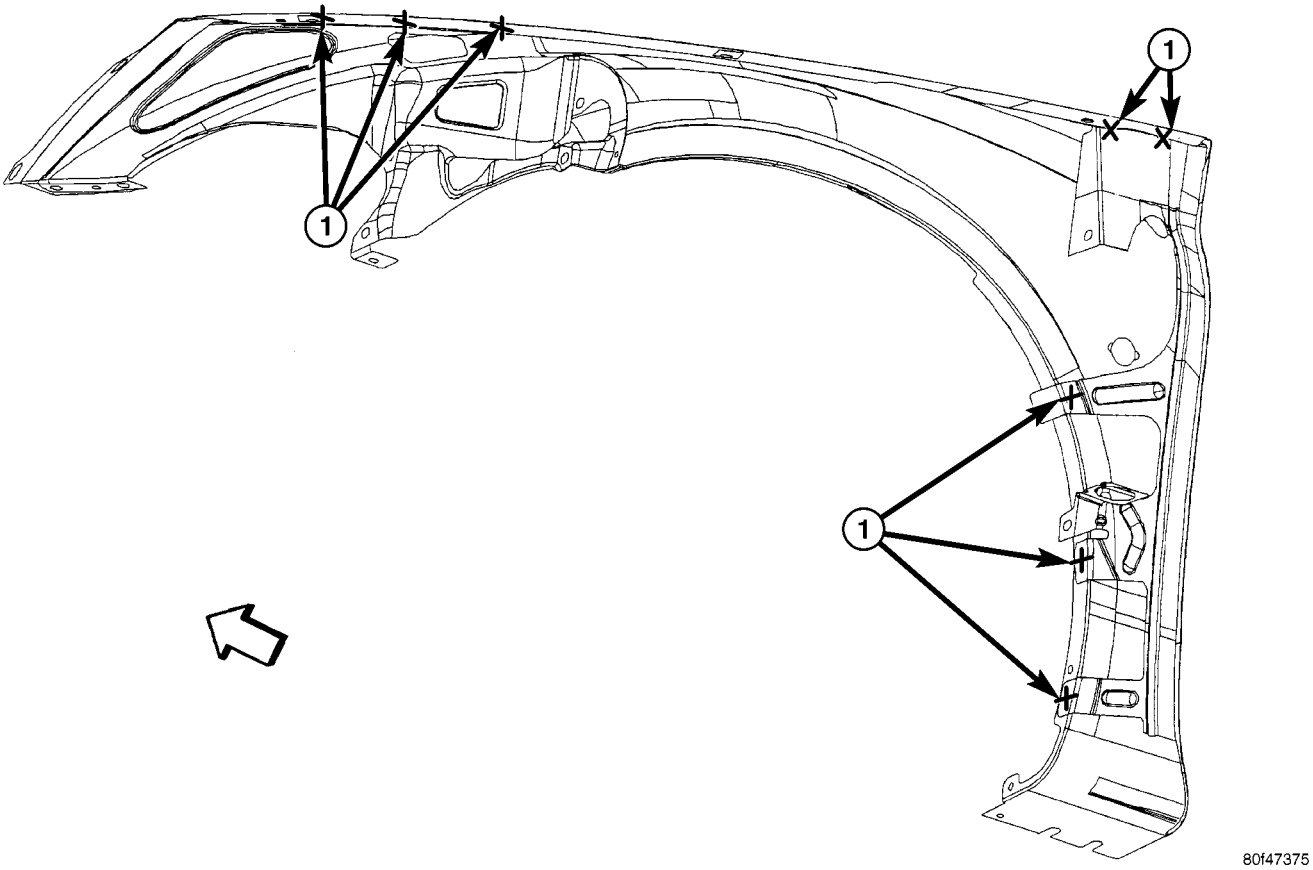

Fig. 23 HEADLAMP CLOSURE PANEL AND HINGE PILLAR REINFORCEMENT

1 - WELDING OF TWO PARTS

WELD LOCATIONS (Continued)

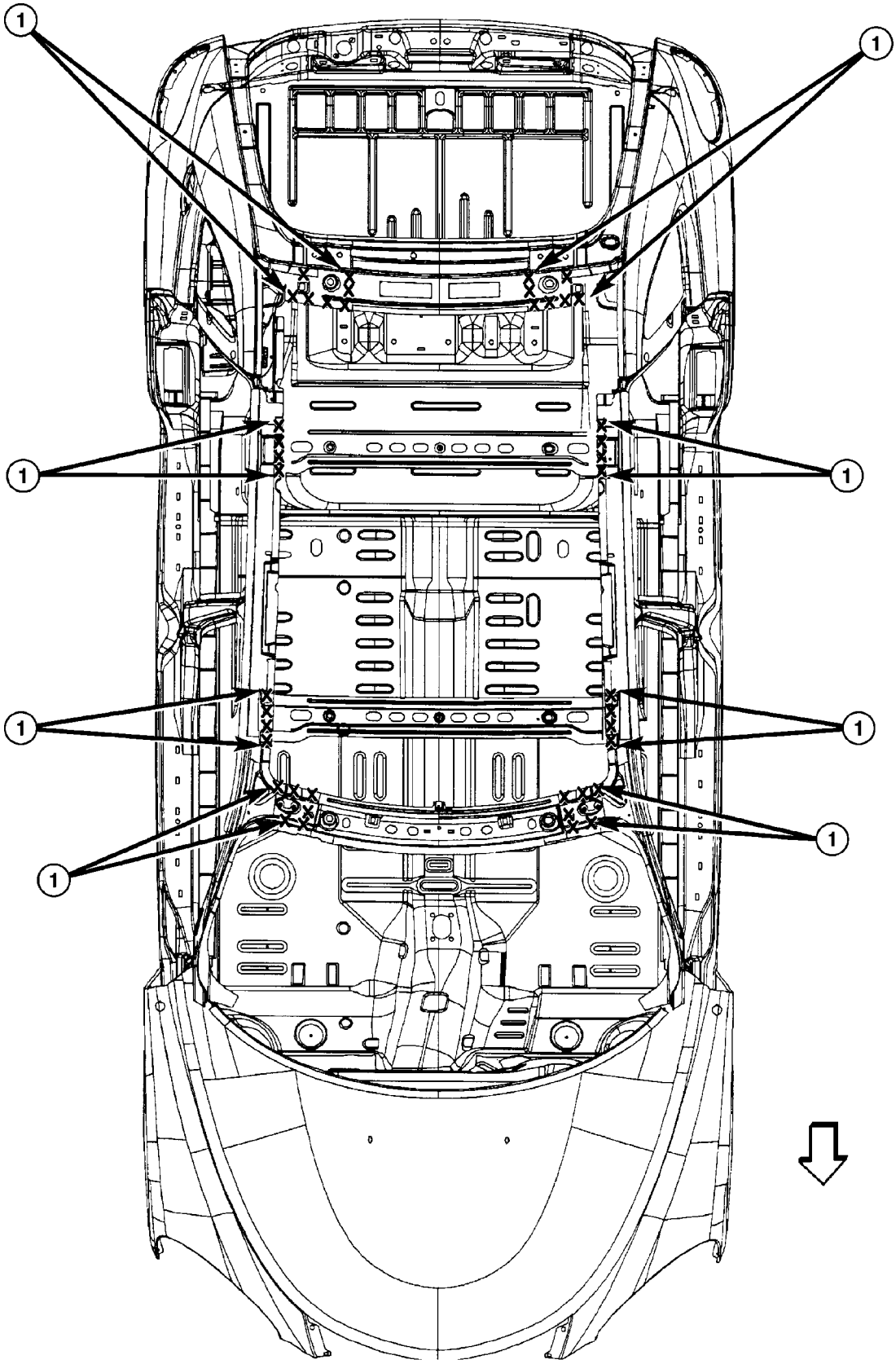

Fig. 24 UPPER WINDSHIELD FRAME, ROOF BOWS, LIFTGATE ROOF FRAME TO BODY, SIDE APERTURE

1 - WELDING OF TWO PARTS

WELD LOCATIONS (Continued)

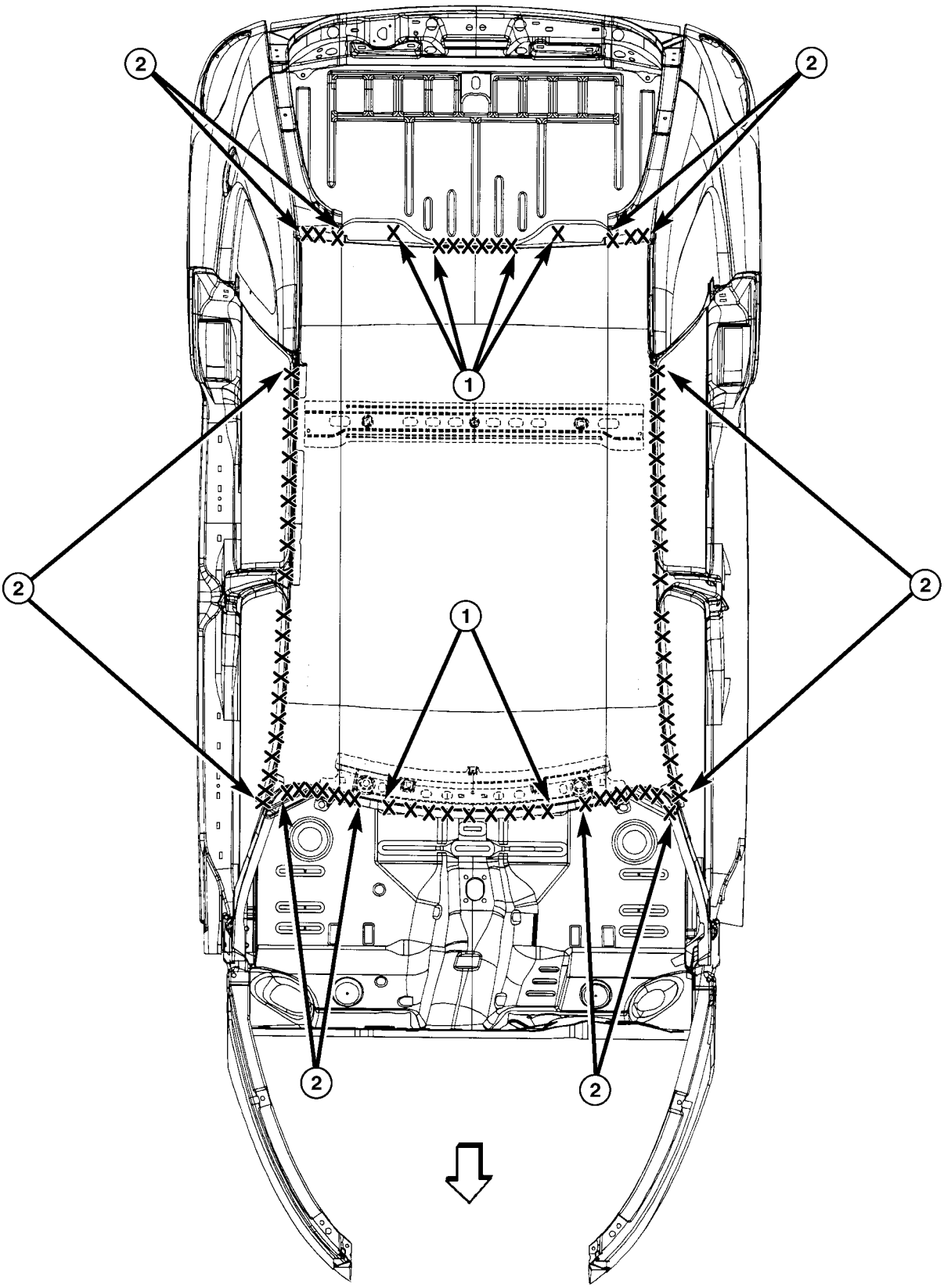

Fig. 25 OUTER ROOF PANEL TO BODY SIDE APERTURE WINDSHIELD FRAME AND LIFTGATE

1 - WELDING OF TWO PARTS

2 - WELDING OF THREE PARTS

WELD LOCATIONS (Continued)

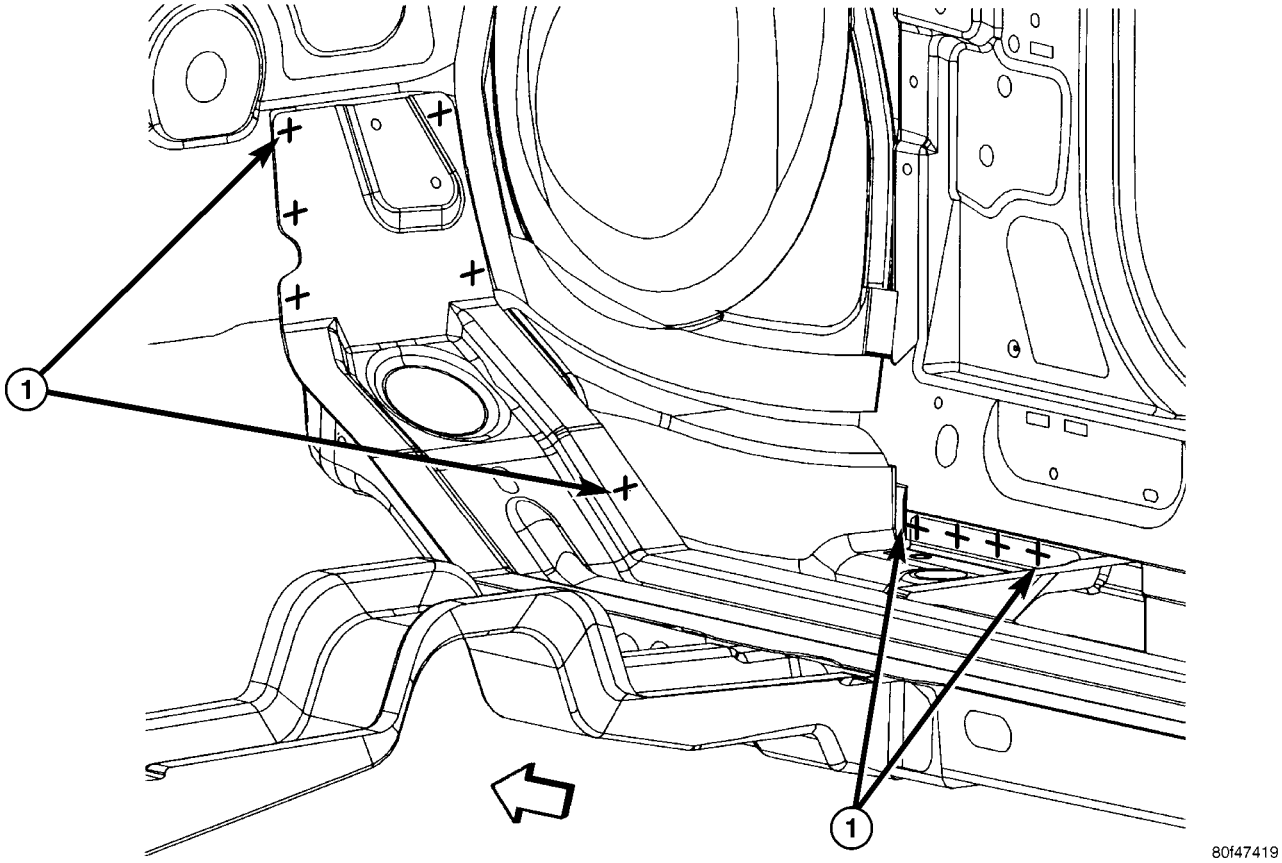

Fig. 26 FRONT SIDE RAIL REAR TO DASH AND COWL SIDE PANELS

1 - WELDING OF TWO PARTS

WELD LOCATIONS (Continued)

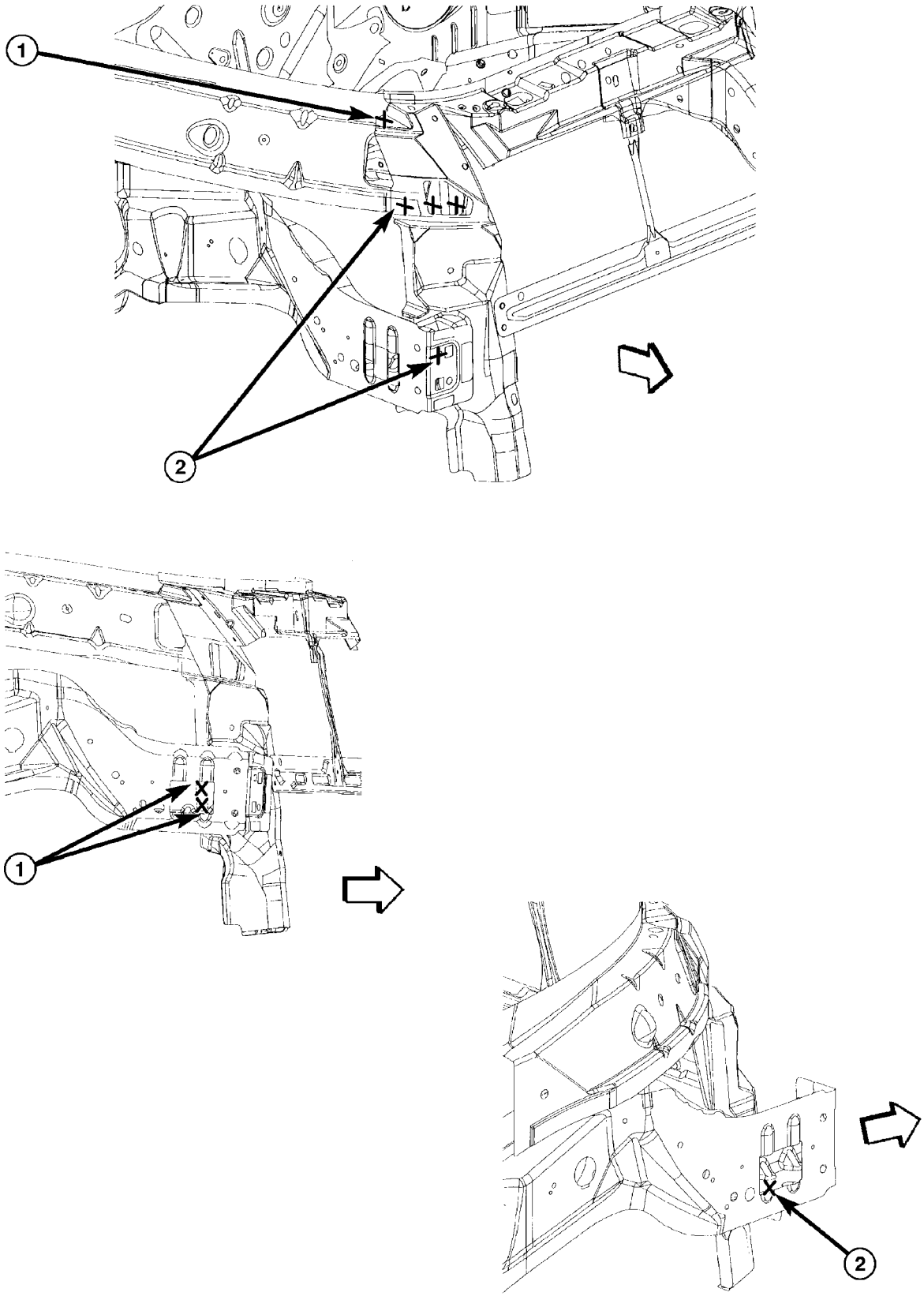

Fig. 27 RADIATOR CLOSURE TO UPPER LOAD BEAM AND FRONT SIDE RAIL ASSEMBLY

1 - WELDING OF TWO PARTS

2 - WELDING OF THREE PARTS

WELD LOCATIONS (Continued)

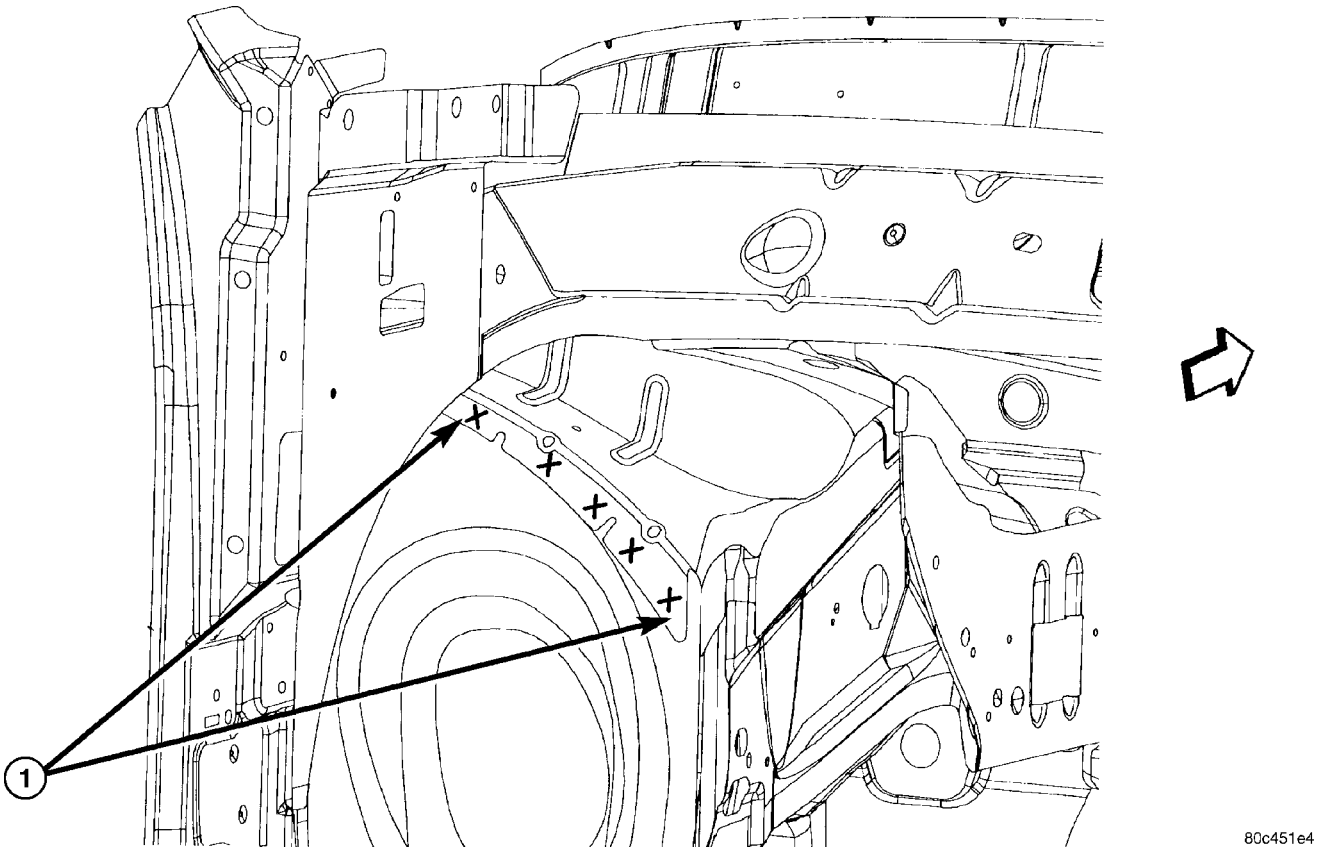

Fig. 28 STRUT TOWER TO DASH PANEL

1 - WELDING OF TWO PARTS

WELD LOCATIONS (Continued)

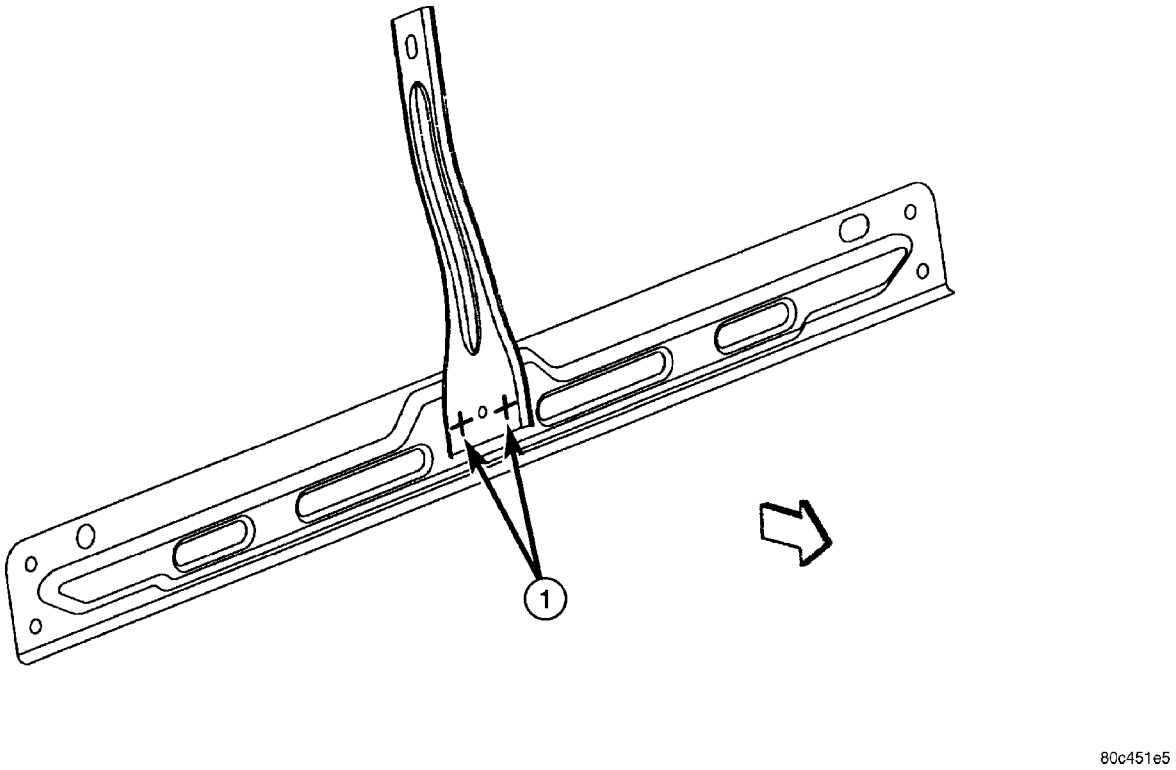

Fig. 29 RADIATOR CLOSURE PLANE BRACE TO UPPER RADIATOR CROSSMEMBER BRACE

1 - WELDING OF TWO PARTS

WELD LOCATIONS (Continued)

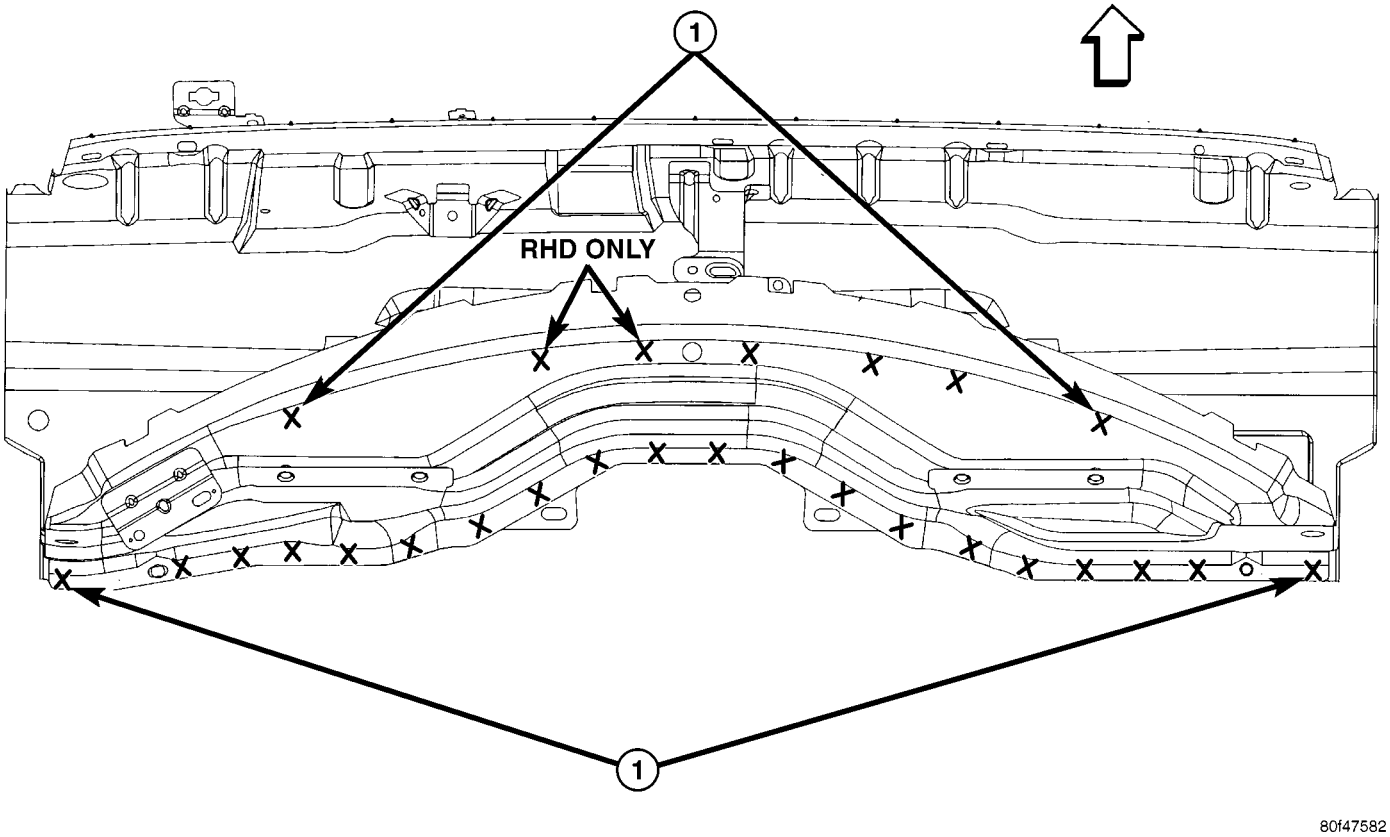

Fig. 30 COWL TOP TO COWL PLENUM

1 - WELDING OF TWO PARTS

WELD LOCATIONS (Continued)

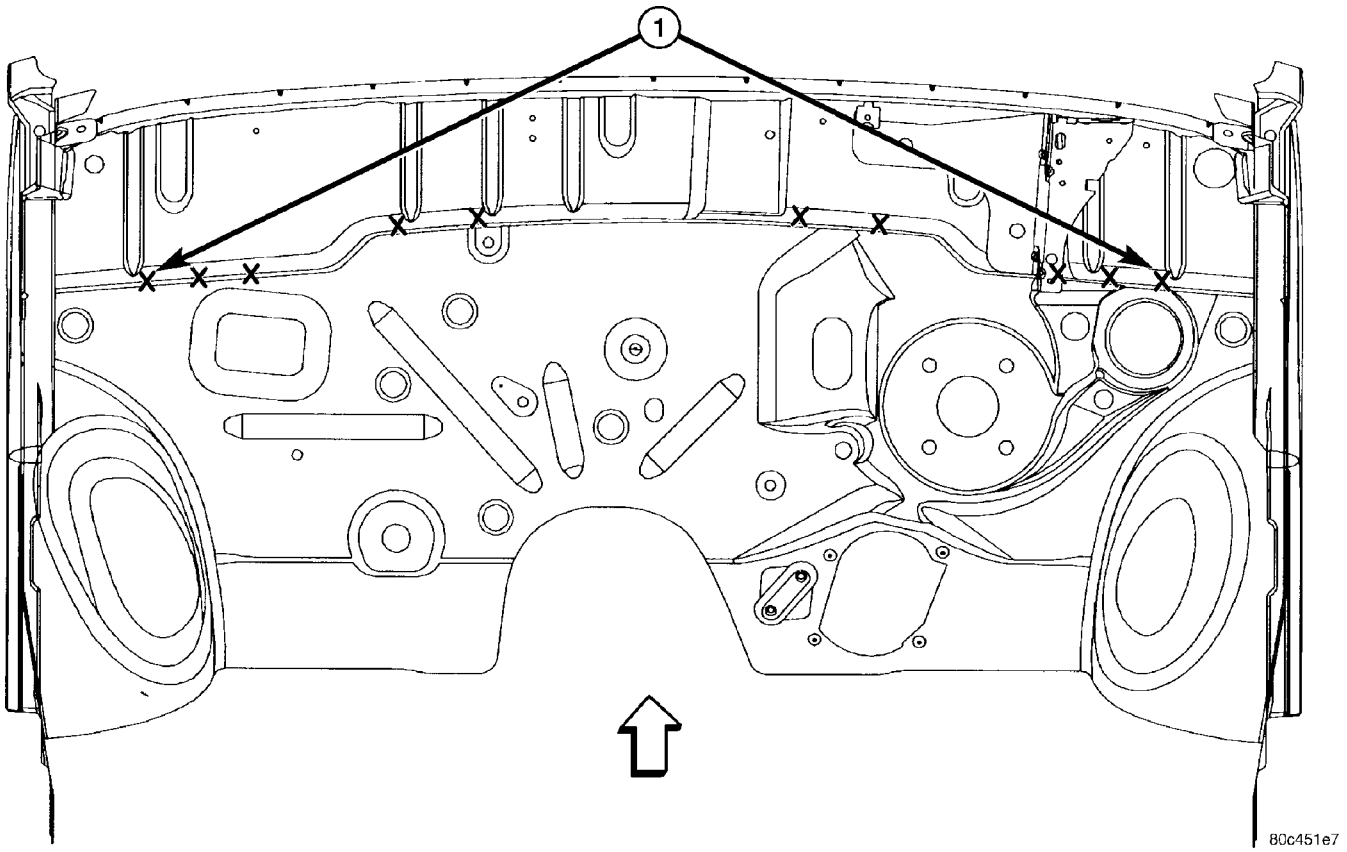

Fig. 31 COWL PLENUM TO DASH PANEL

1 - WELDING OF TWO PARTS

WELD LOCATIONS (Continued)

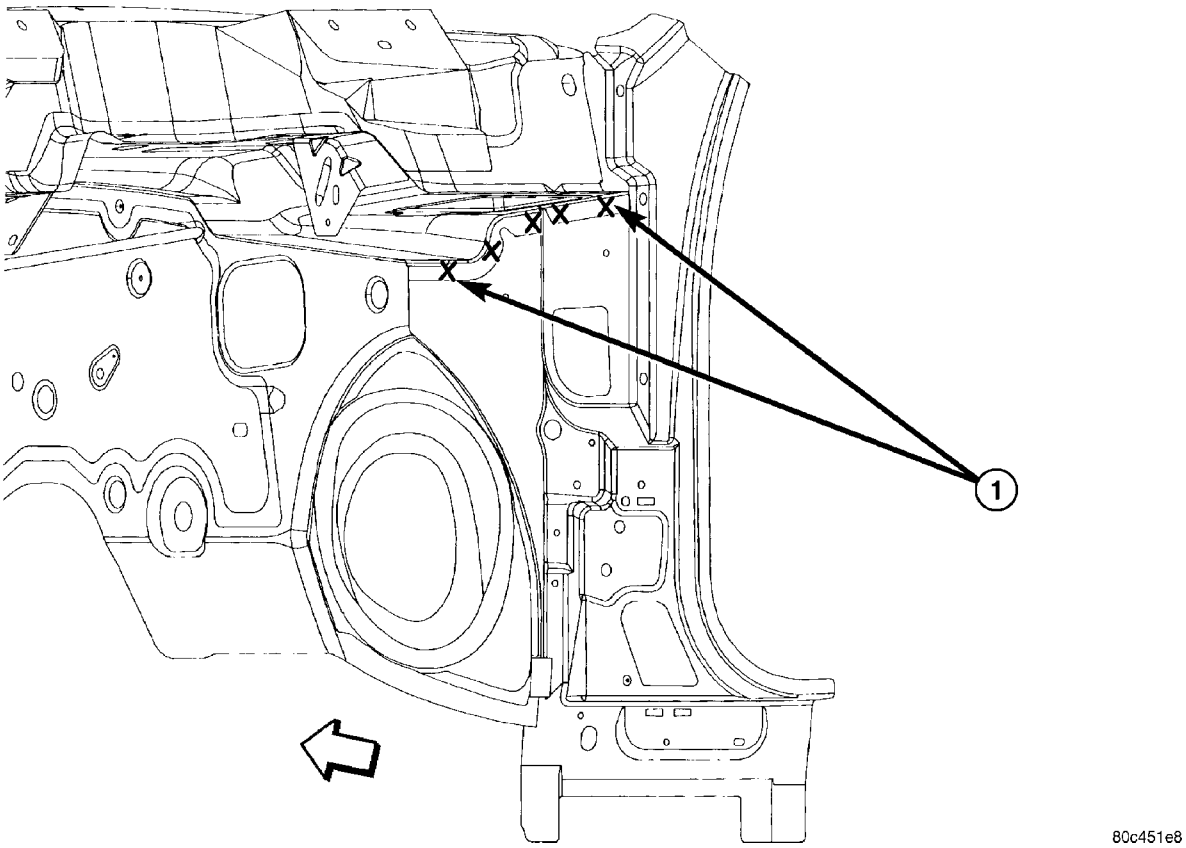

Fig. 32 COWL PLENUM TO COWL SIDE PANEL

1 - WELDING OF TWO PARTS

WELD LOCATIONS (Continued)

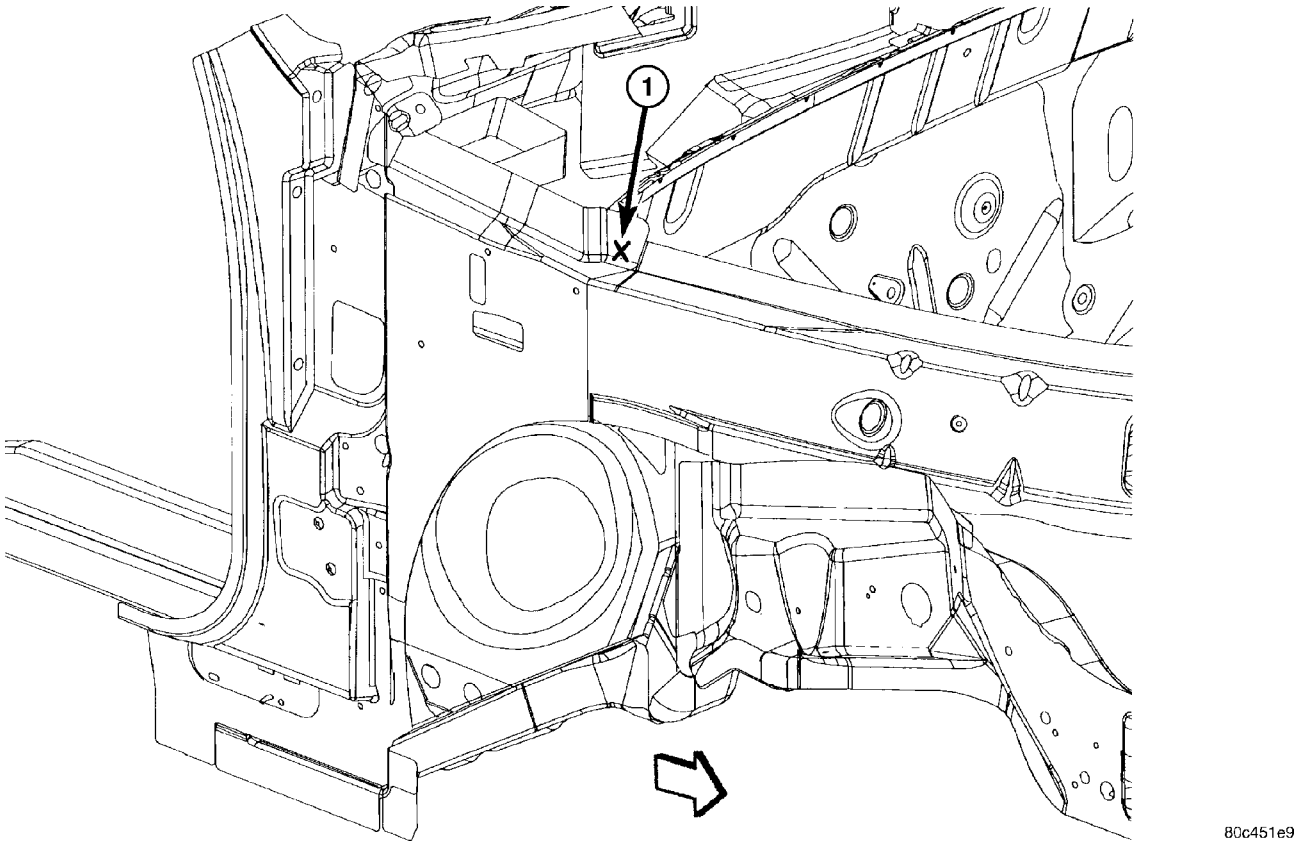

Fig. 33 OUTER LOAD BEAM TO COWL SIDE PANEL

1 - WELDING OF TWO PARTS

WELD LOCATIONS (Continued)

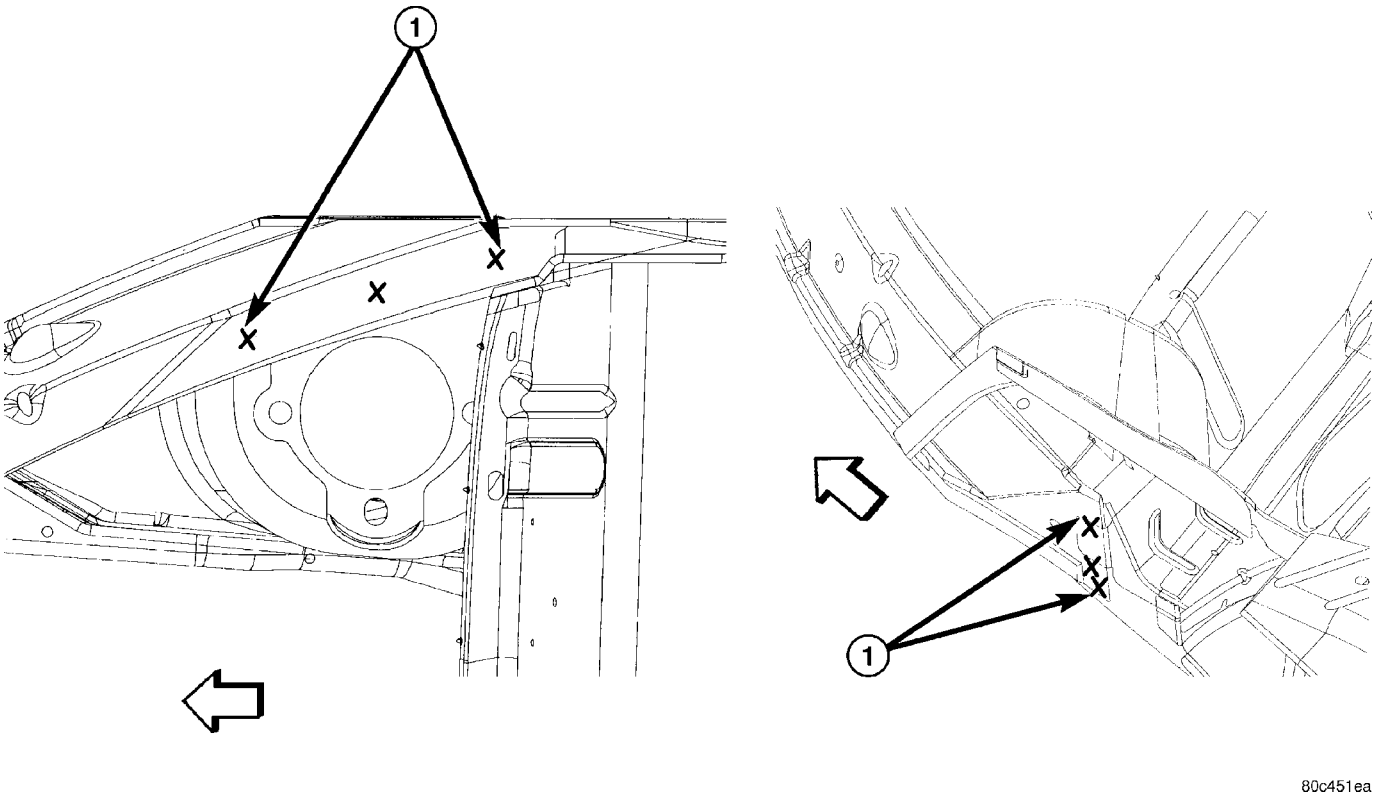

Fig. 34 INNER LOAD BEAM TO STRUT TOWER AND COWL SIDE PANEL

1 - WELDING OF TWO PARTS

WELD LOCATIONS (Continued)

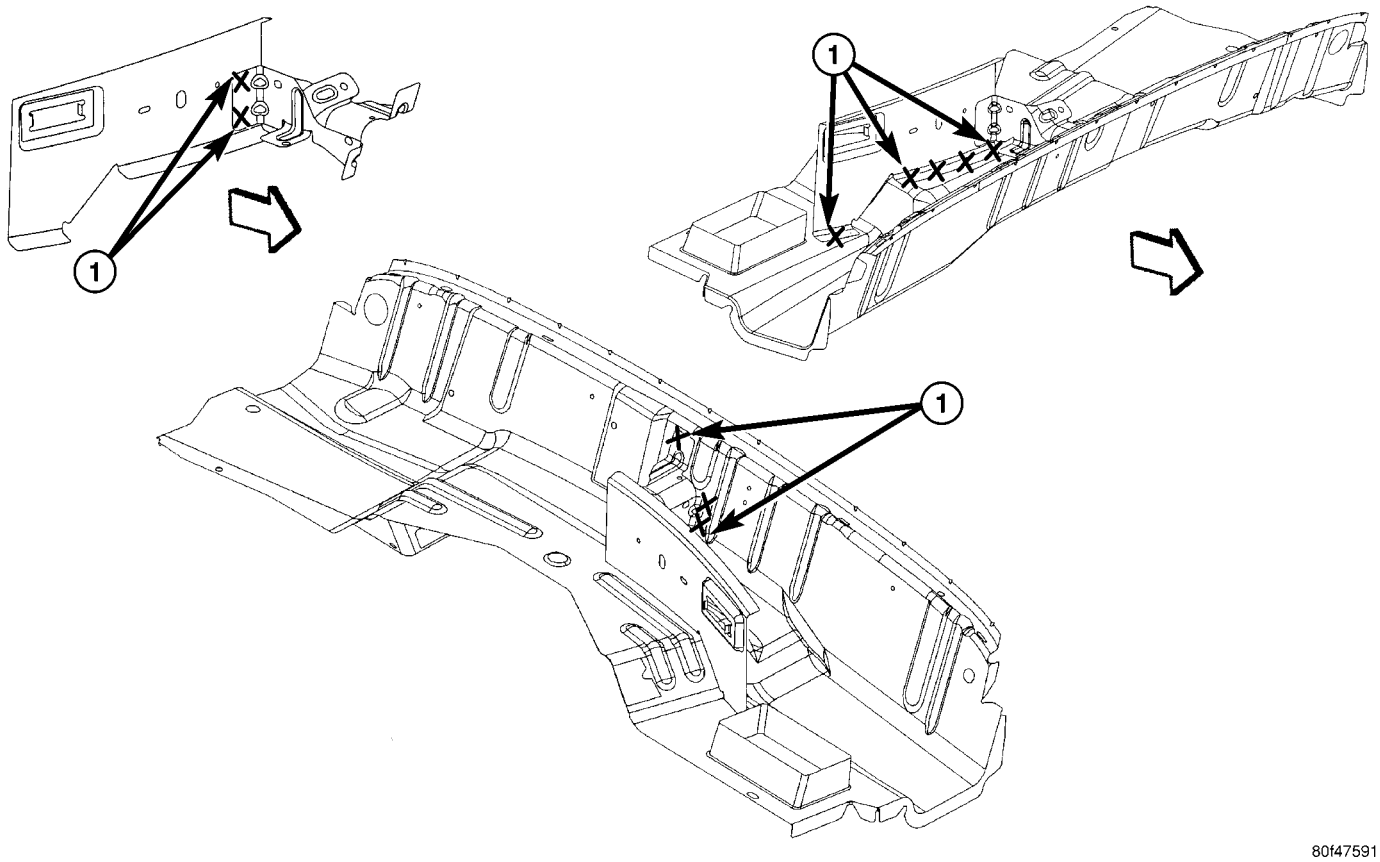

Fig. 35 WINDSHIELD WIPER REINFORCEMENT GUSSET

1 - WELDING OF TWO PARTS

WELD LOCATIONS (Continued)

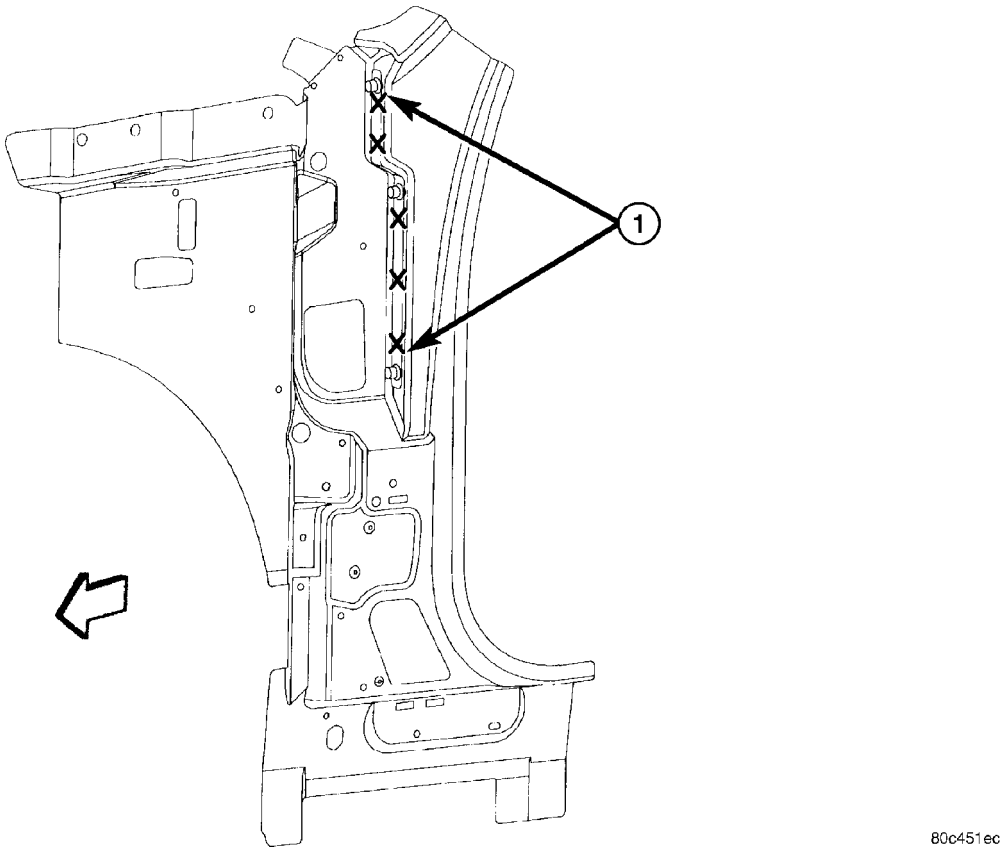

Fig. 36 INSTRUMENT PANEL REINFORCEMENT TO COWL SIDE PANEL

1 - WELDING OF TWO PARTS

WELD LOCATIONS (Continued)

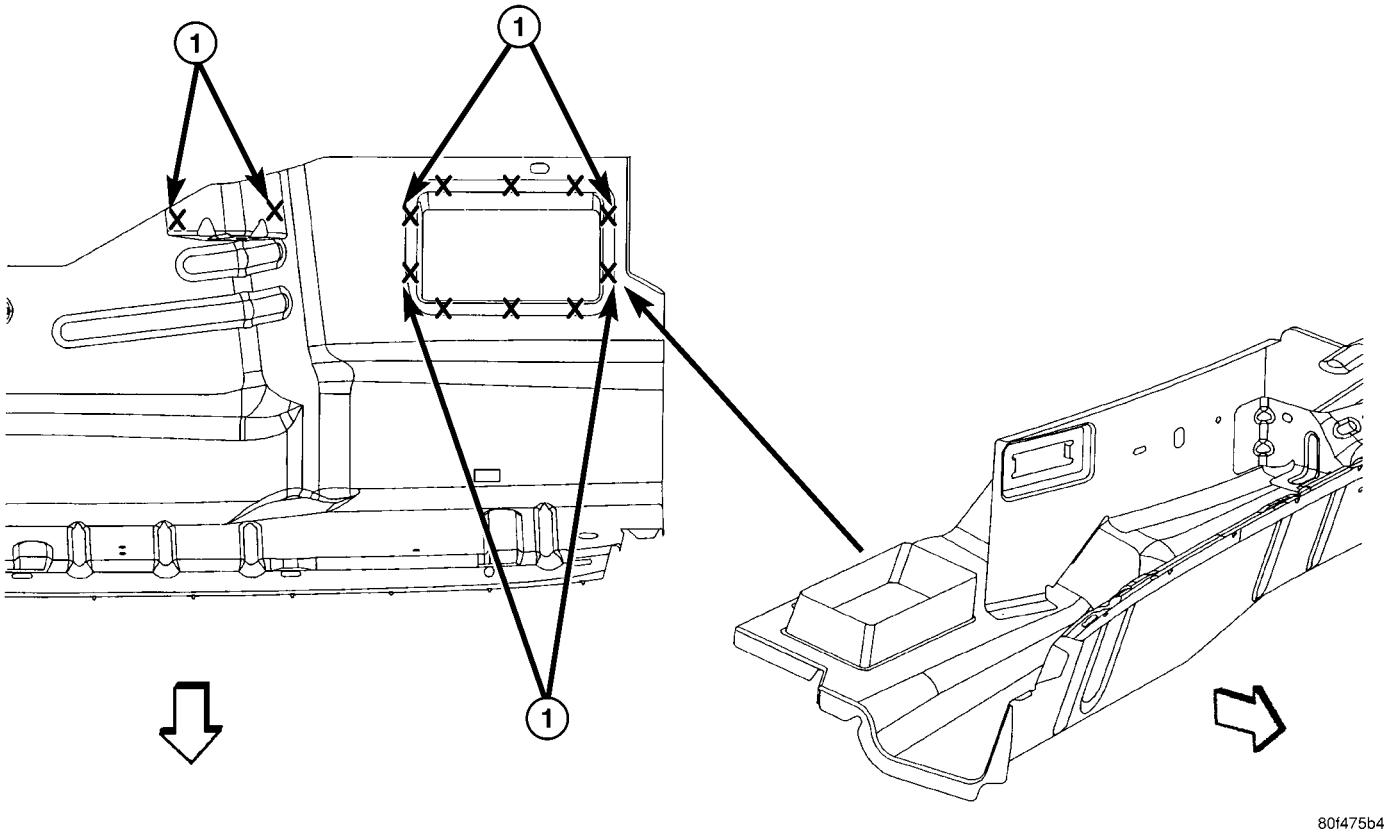

Fig. 37 COWL PLENUM WATER DEFLECTOR TO COWL PLENUM PANEL

1 - WELDING OF TWO PARTS

WELD LOCATIONS (Continued)

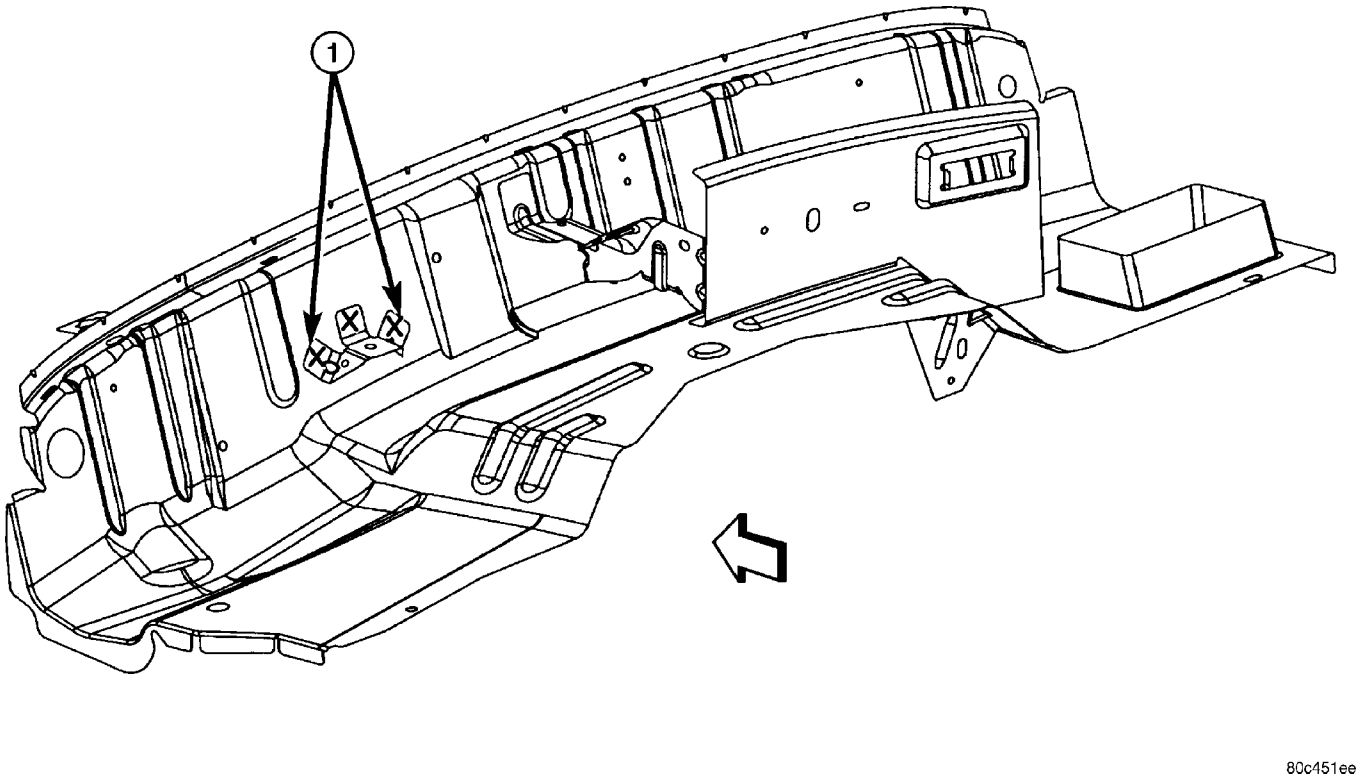

Fig. 38 LEFT WINDSHIELD WIPER ATTACHING BRACKET TO COWL PLENUM

1 - WELDING OF TWO PARTS

WELD LOCATIONS (Continued)

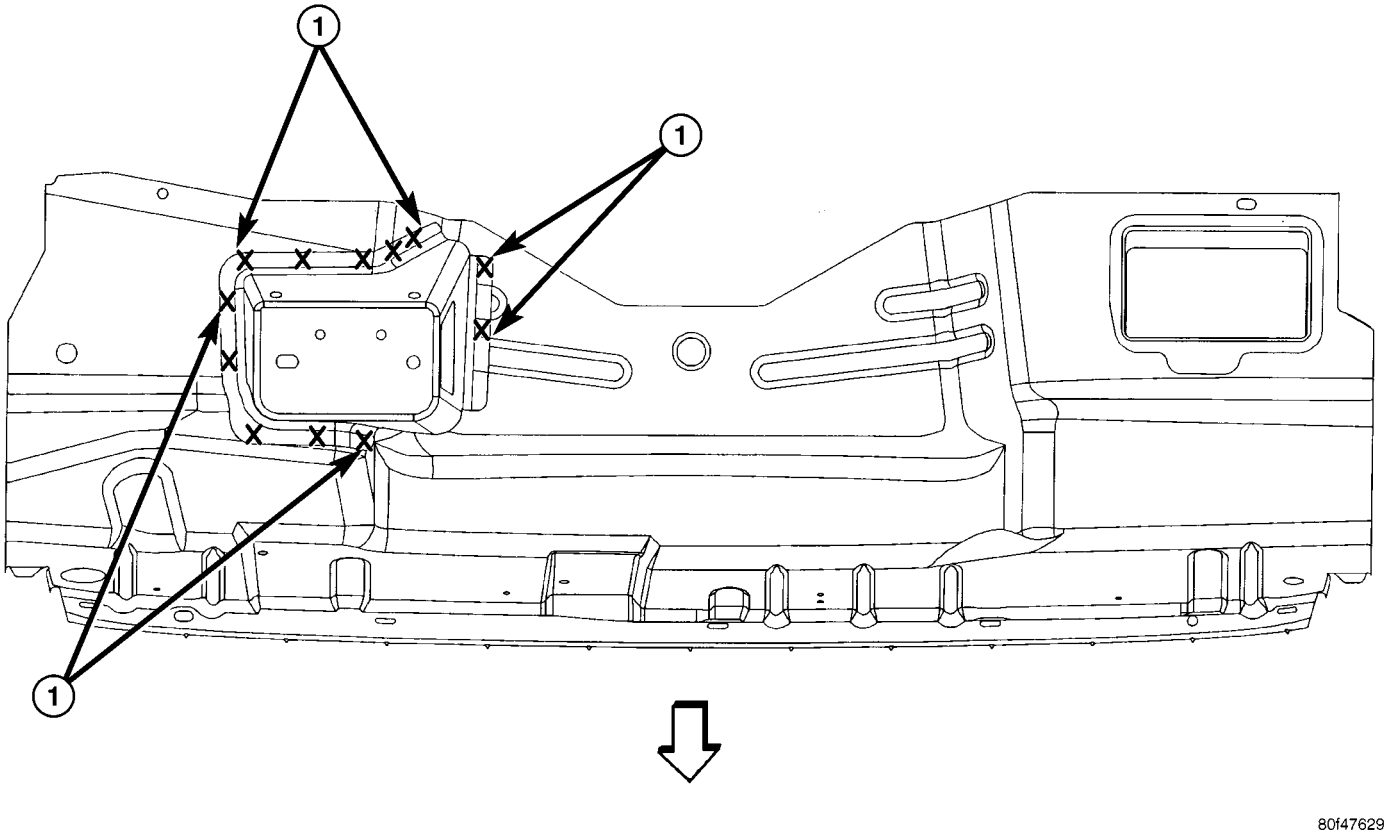

Fig. 39 BRAKE PEDAL SUPPORT BRACKET TO COWL PLENUM

1 - WELDING OF TWO PARTS

WELD LOCATIONS (Continued)

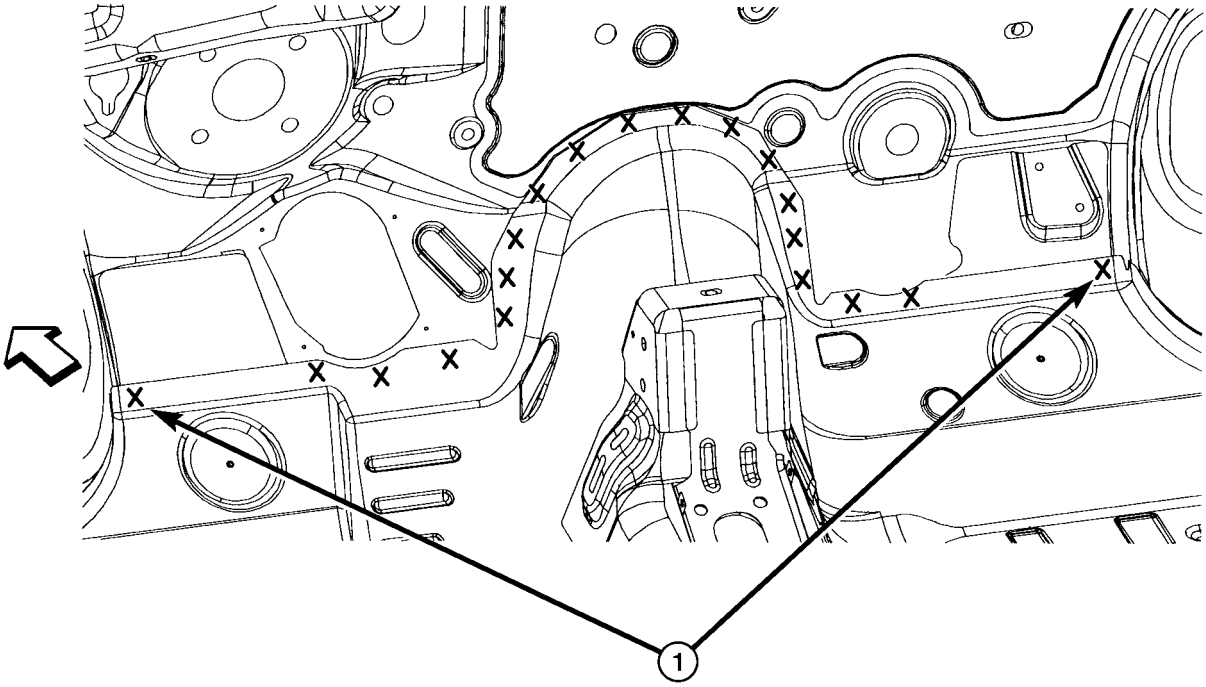

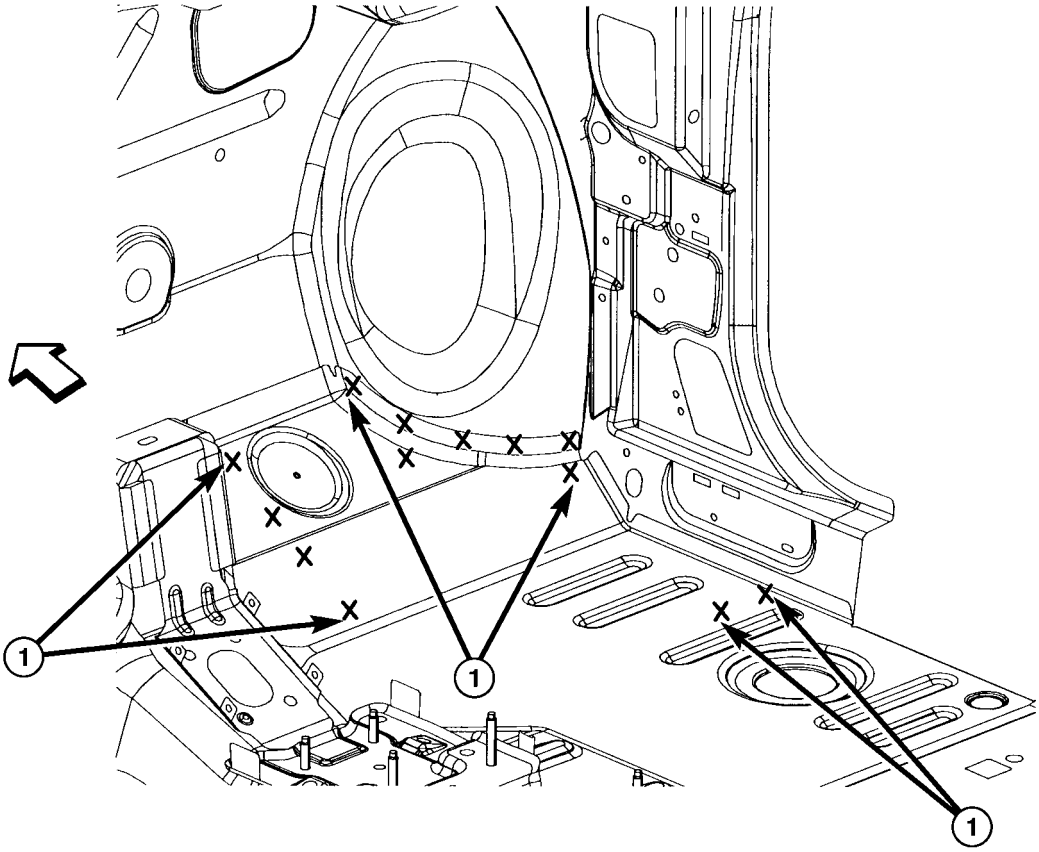

Fig. 40 FRONT FLOOR PAN TO DASH PANEL AND COWL SIDE PANEL

1 - WELDING OF TWO PARTS

WELD LOCATIONS (Continued)

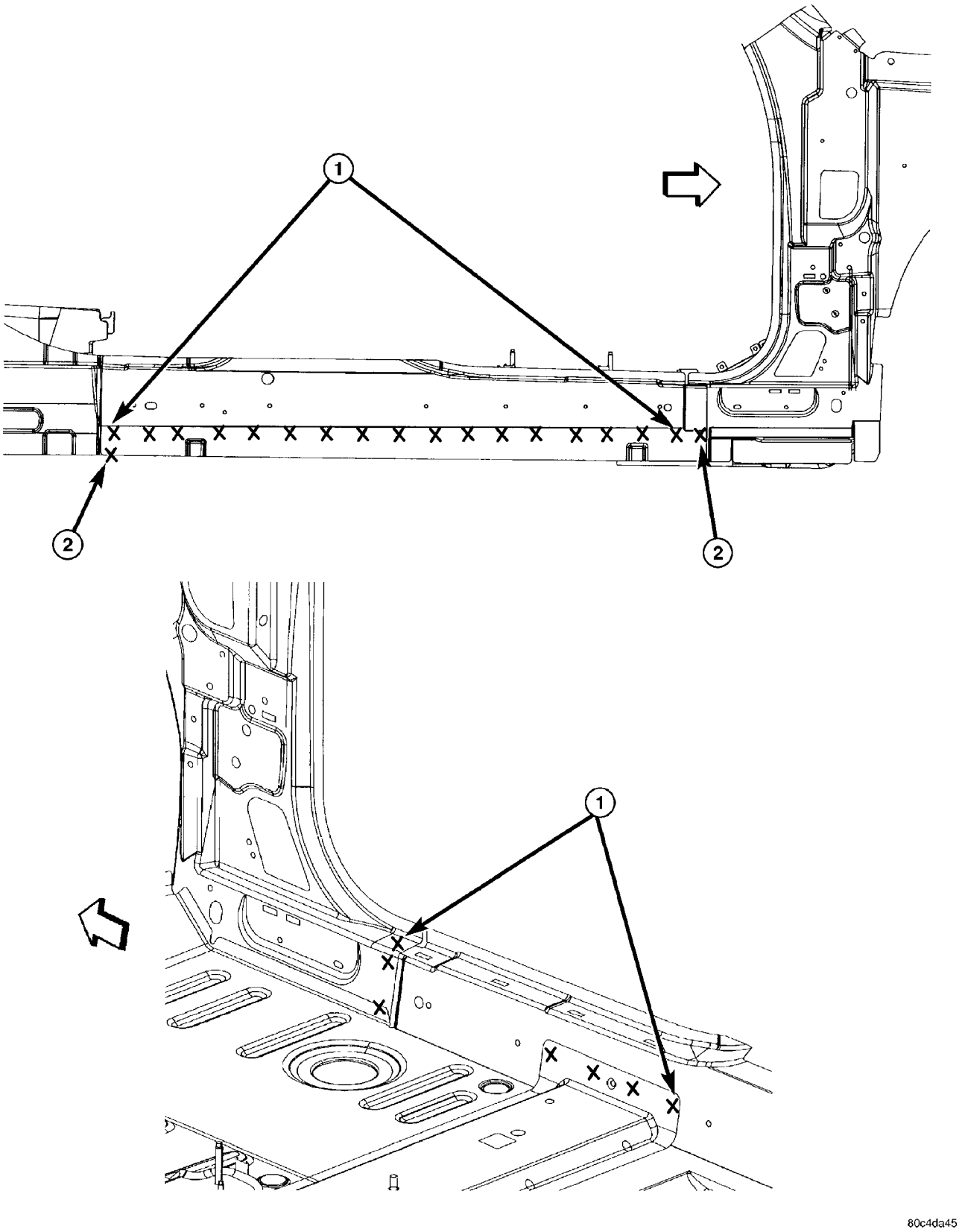

Fig. 41 INNER BODY SIDE SILL TO FRONT FLOOR PAN AND FRONT SEAT REINFORCEMENT

1 - WELDING OF TWO PARTS
2 - WELDING OF THREE PARTS

WELD LOCATIONS (Continued)

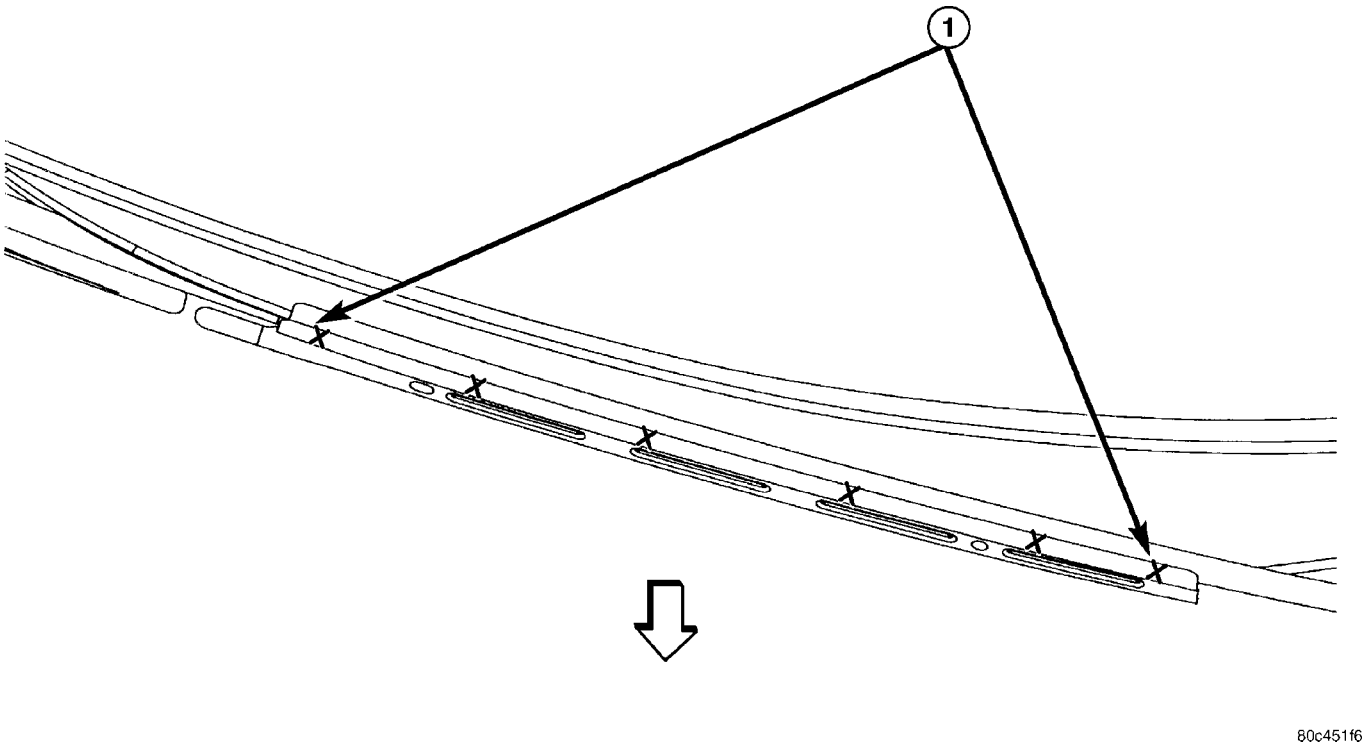

Fig. 42 A-PILLAR WEATHERSTRIP RETAINER TO BODY SIDE APERTURE PANEL

1 - WELDING OF TWO PARTS

WELD LOCATIONS (Continued)

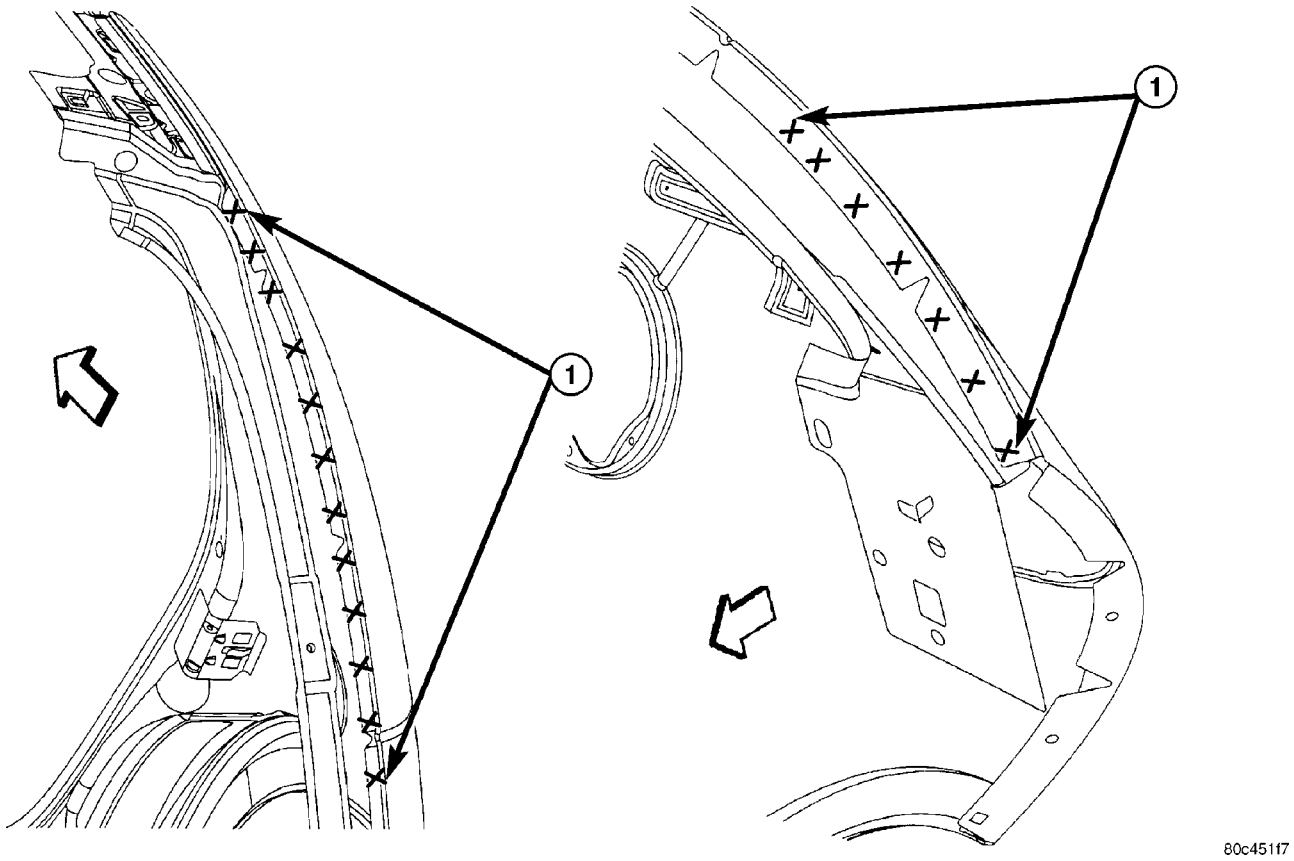

Fig. 43 LIFTGATE SIDE DRAIN TROUGH TO BODY SIDE APERTURE PANEL

1 - WELDING OF TWO PARTS

WELD LOCATIONS (Continued)

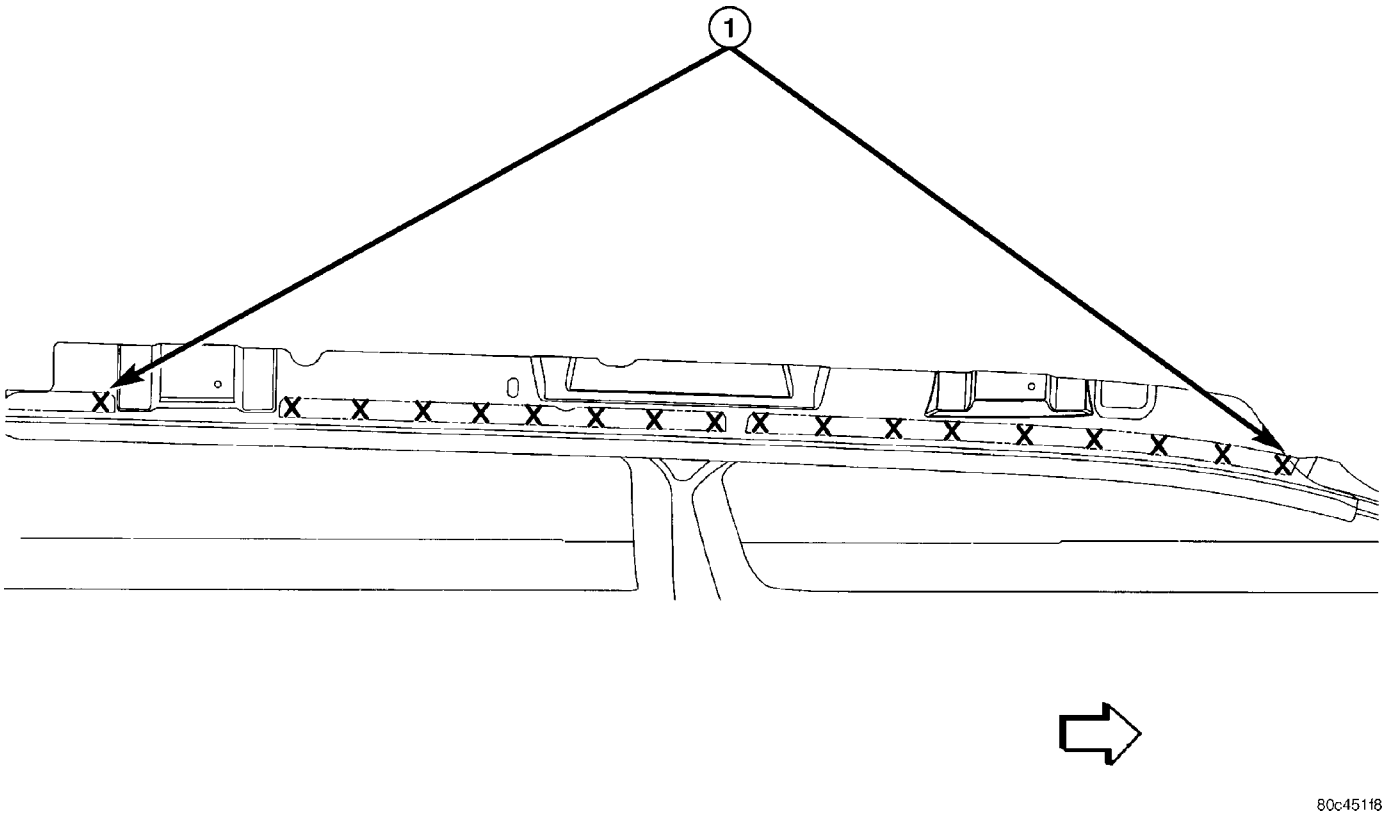

Fig. 44 INNER ROOF SIDE RAIL REINFORCEMENT TO BODY SIDE APERTURE PANEL

1 - WELDING OF TWO PARTS

WELD LOCATIONS (Continued)

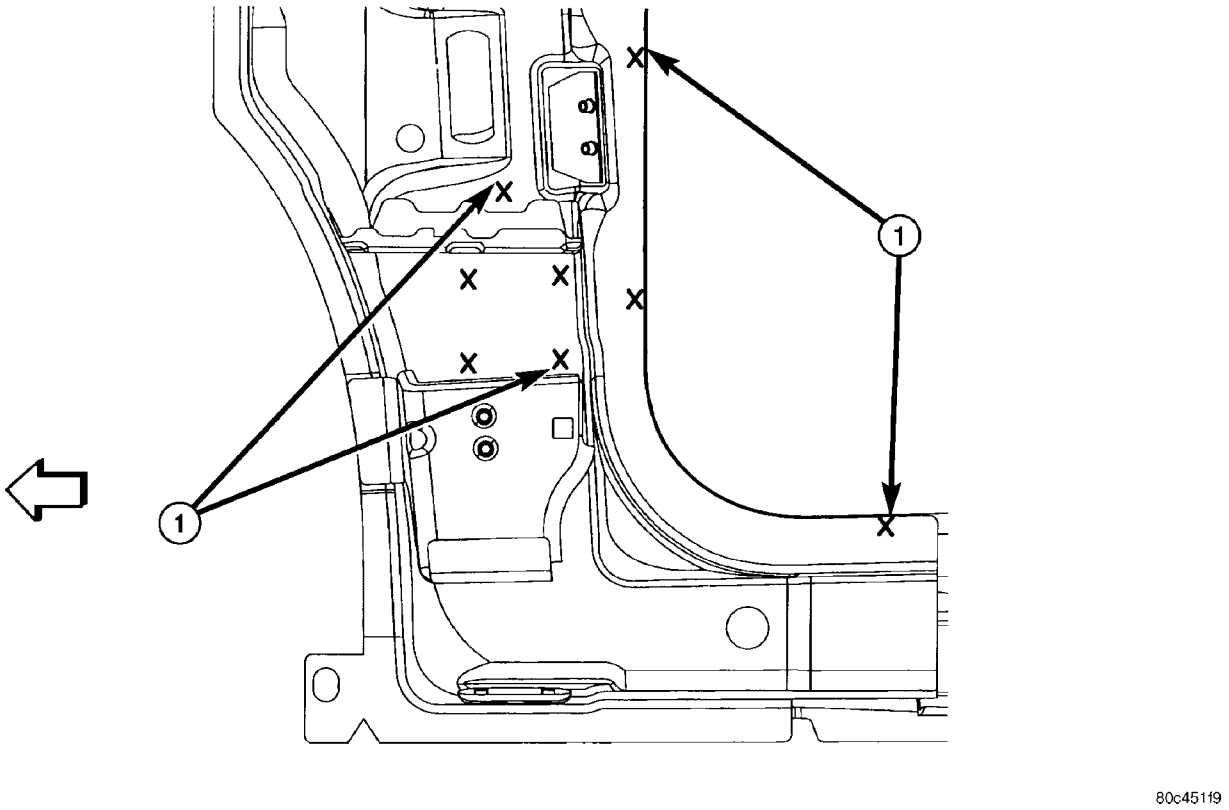

Fig. 45 FRONT HINGE PILLAR TO BODY SIDE APERTURE PANEL

1 - WELDING OF TWO PARTS

WELD LOCATIONS (Continued)

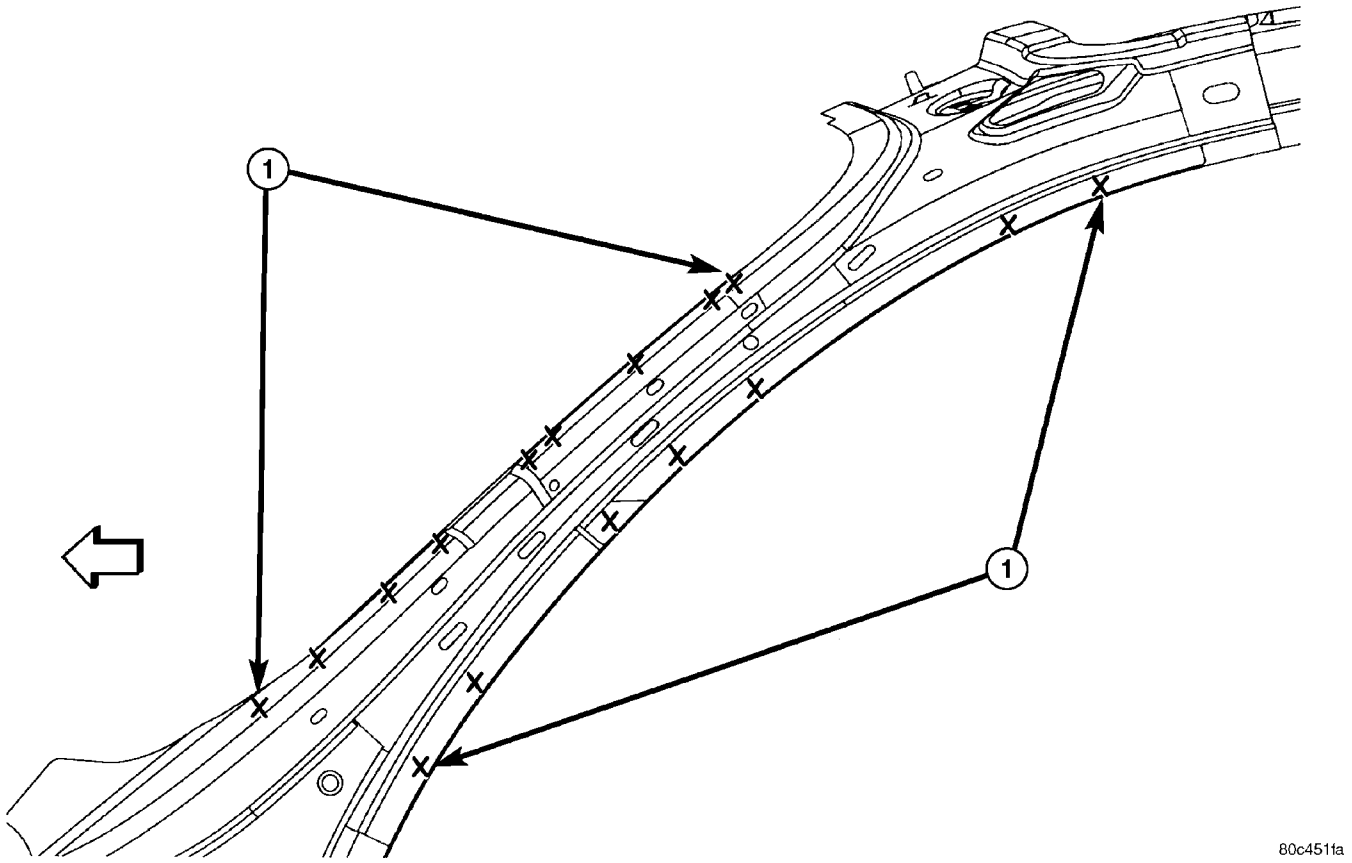

Fig. 46 INNER WINDSHIELD SIDE FRAME TO BODY SIDE APERTURE PANEL

1 - WELDING OF TWO PARTS

WELD LOCATIONS (Continued)

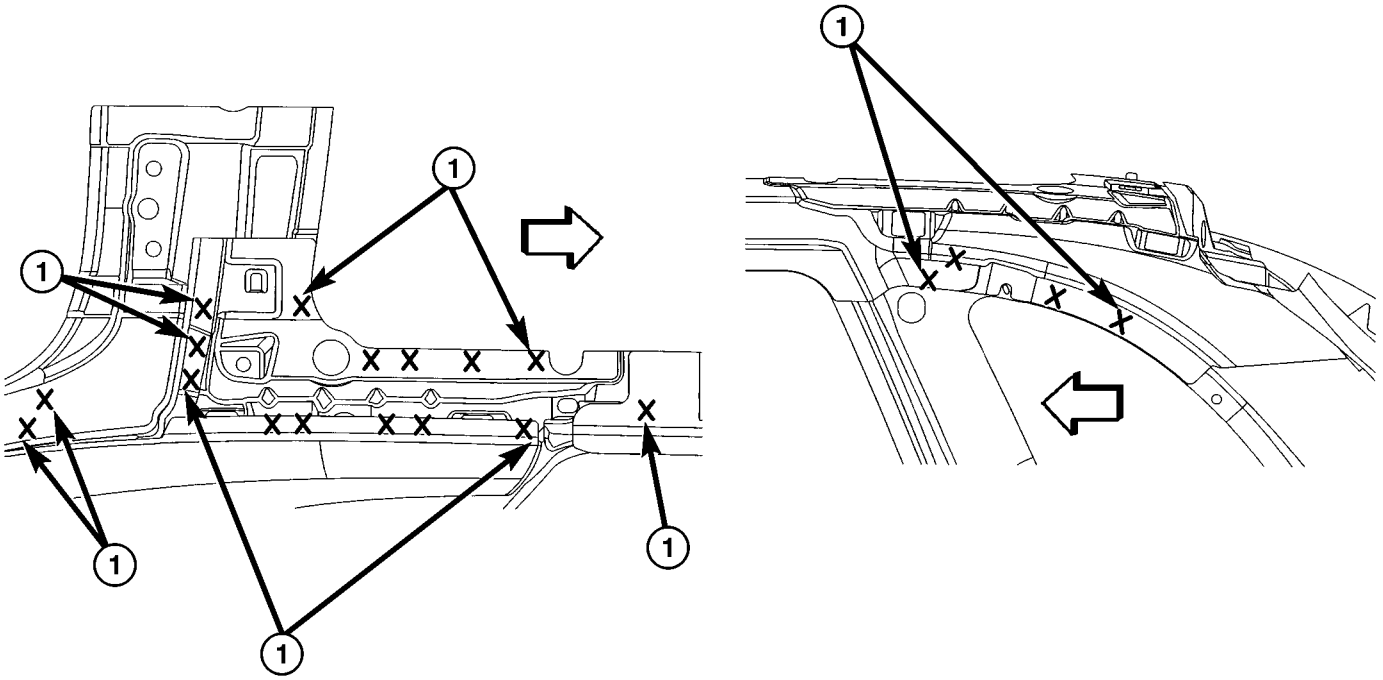

Fig. 47 D-PILLAR UPPER REINFORCEMENT TO BODY SIDE APERTURE PANEL, ROOF RAIL SIDE REINFORCEMENT AND INNER QUARTER PANEL

1 - WELDING OF TWO PARTS

WELD LOCATIONS (Continued)

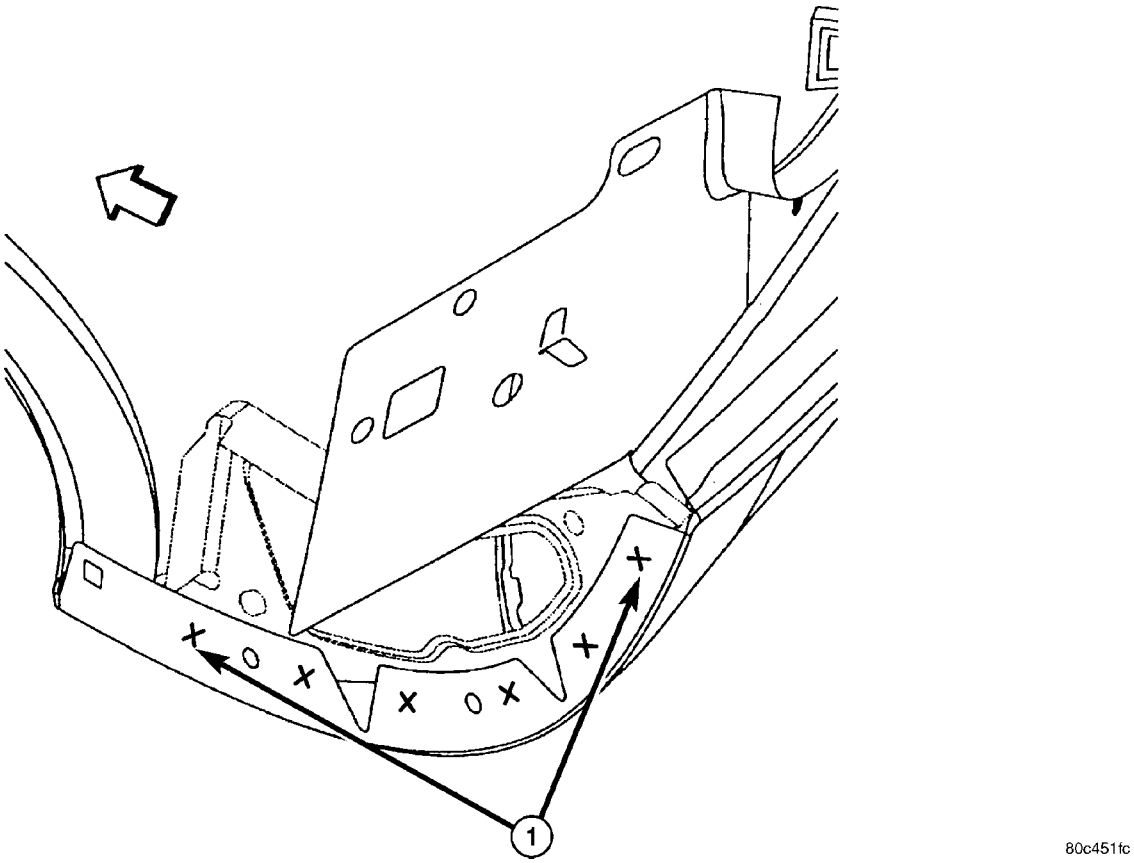

Fig. 48 INNER QUARTER PANEL TAIL LAMP REINFORCEMENT TO BODY SIDE APERTURE PANEL

1 - WELDING OF TWO PARTS

WELD LOCATIONS (Continued)

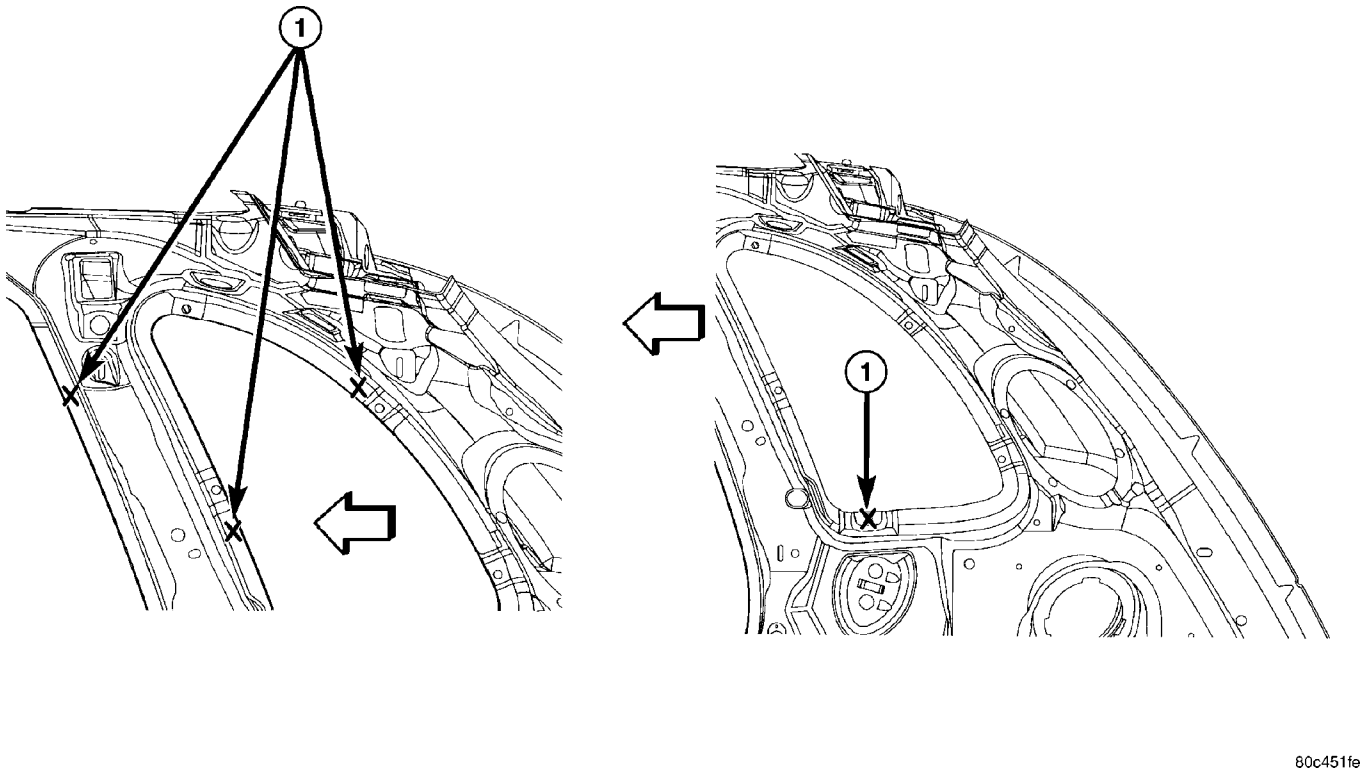

Fig. 49 INNER QUARTER PANEL TO BODY SIDE APERTURE PANEL

1 - WELDING OF TWO PARTS

WELD LOCATIONS (Continued)

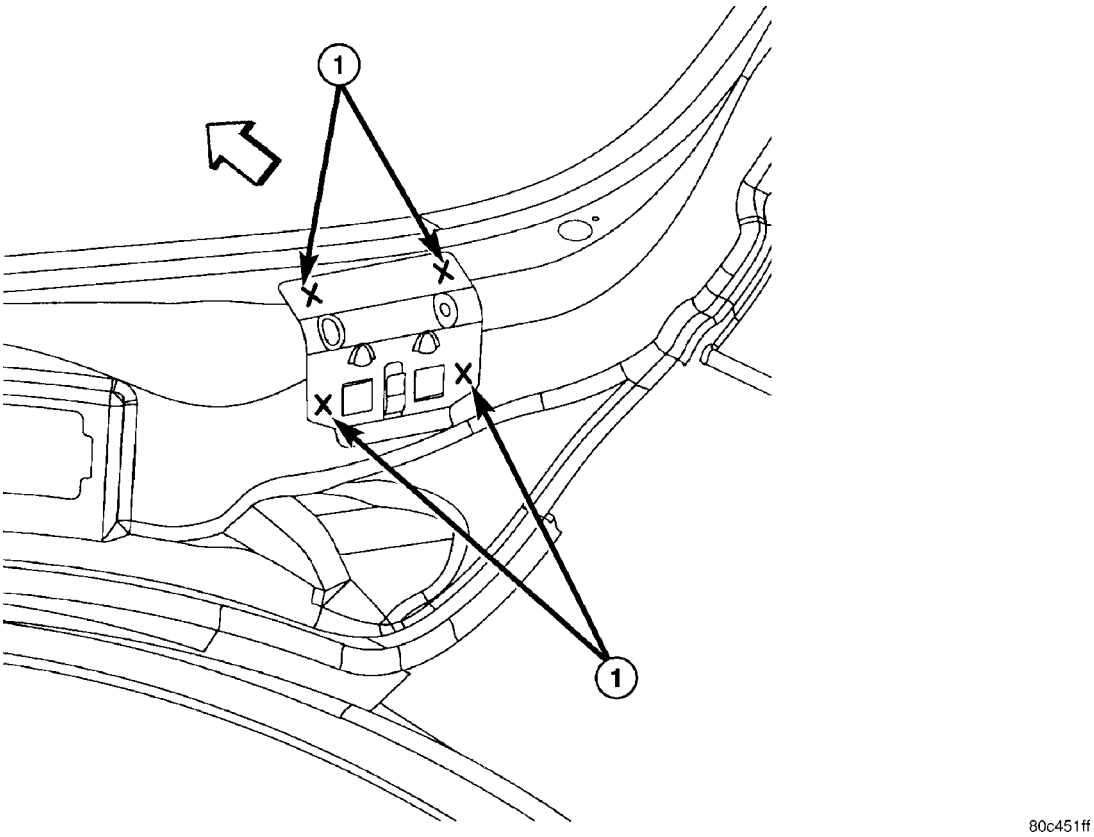

Fig. 50 LATCH STRIKER REINFORCEMENT TO BODY SIDE APERTURE PANEL

1 - WELDING OF TWO PARTS

WELD LOCATIONS (Continued)

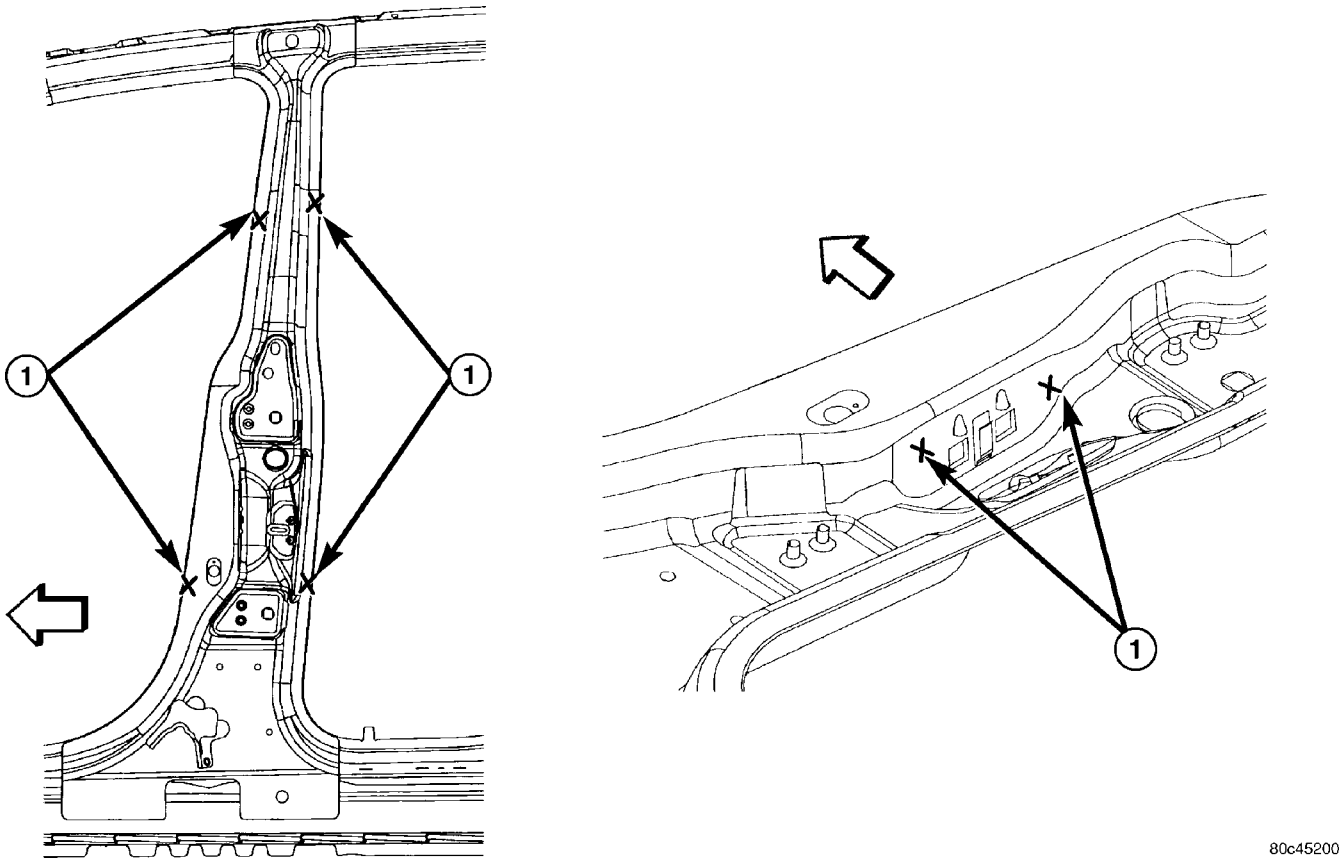

Fig. 51 B-PILLAR REINFORCEMENT TO BODY SIDE APERTURE PANEL

1 - WELDING OF TWO PARTS

WELD LOCATIONS (Continued)

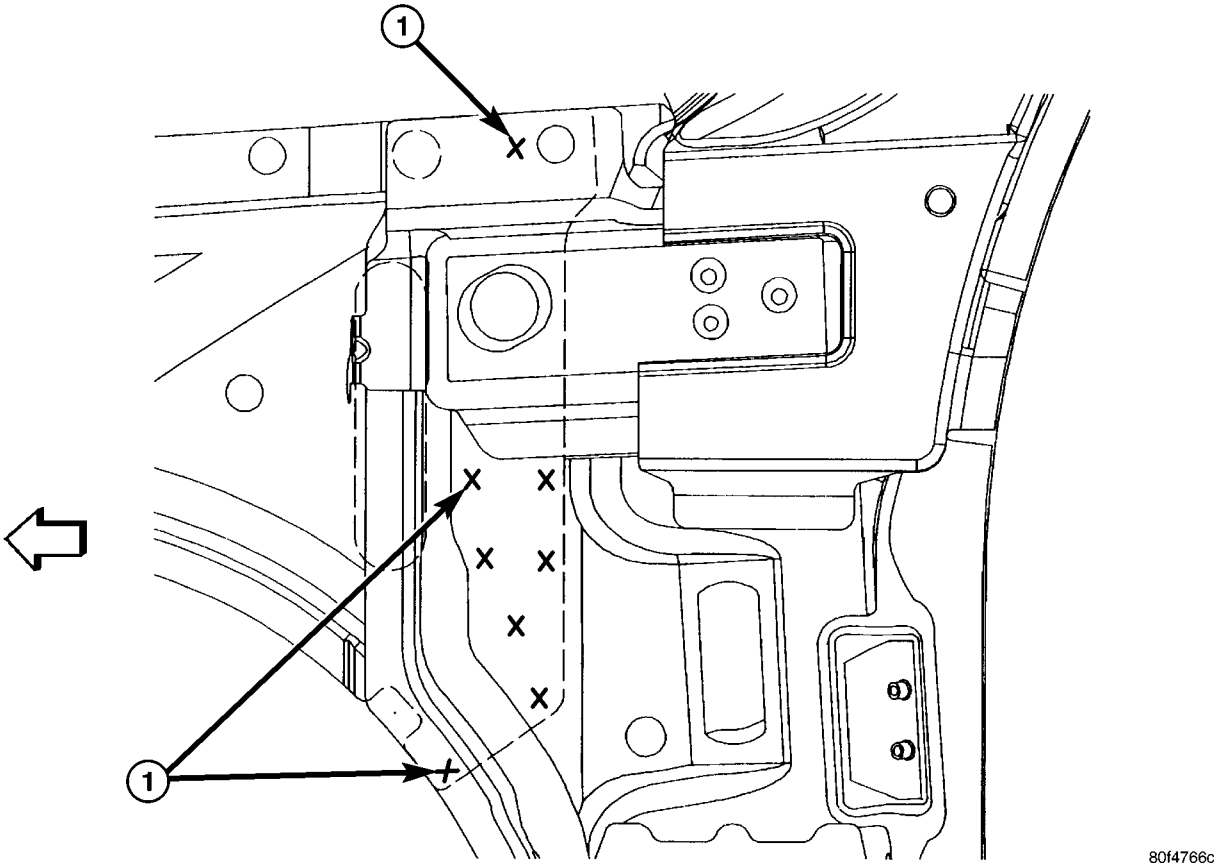

Fig. 52 OUTER LOAD BEAM TO FRONT HINGE PILLAR

1 - WELDING OF TWO PARTS

WELD LOCATIONS (Continued)

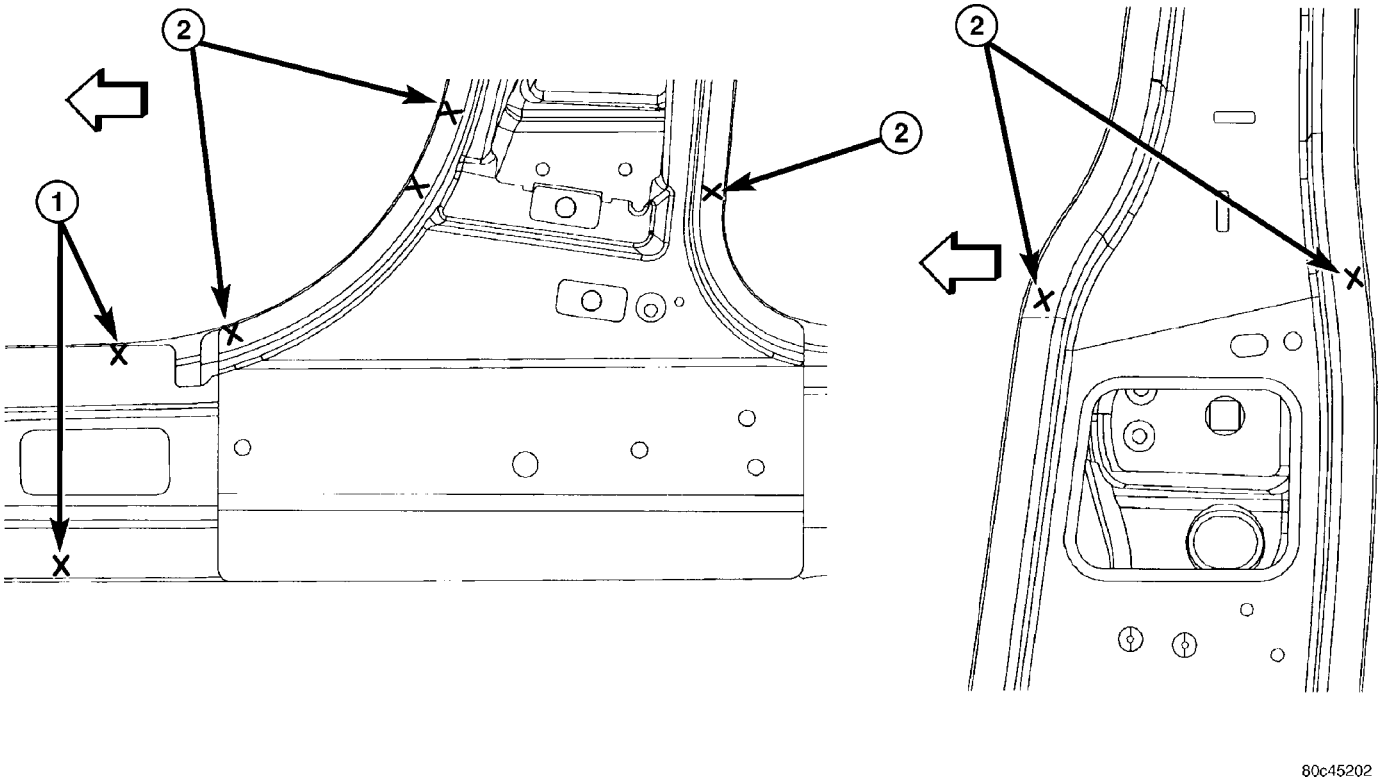

Fig. 53 INNER B-PILLAR TO B-PILLAR REINFORCEMENT AND BODY SIDE APERTURE PANEL

1 - WELDING OF TWO PARTS
2 - WELDING OF THREE PARTS

WELD LOCATIONS (Continued)

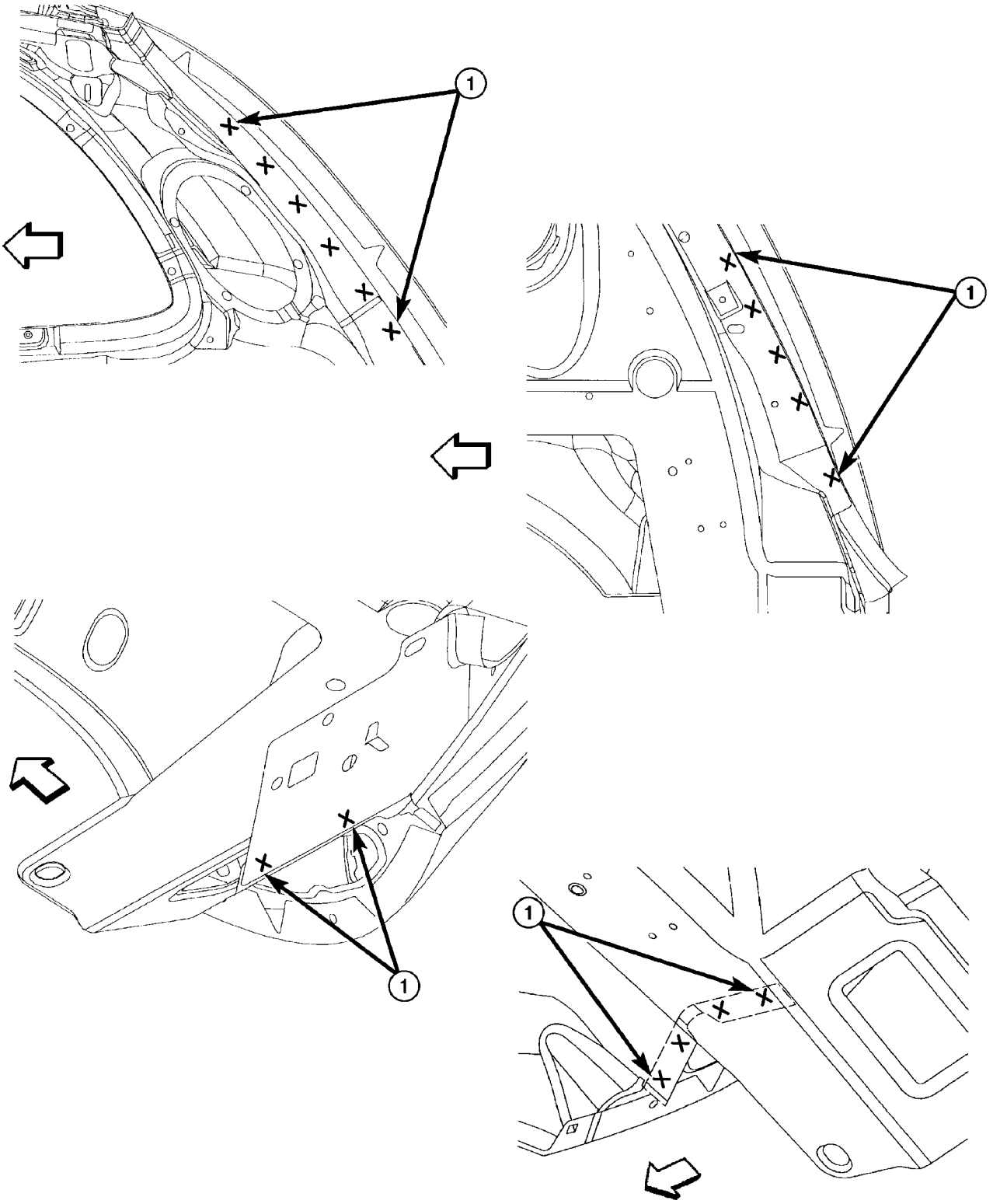

Fig. 54 INNER QUARTER PANEL TO LIFTGATE SIDE DRAIN TROUGH

1 - WELDING OF TWO PARTS

WELD LOCATIONS (Continued)

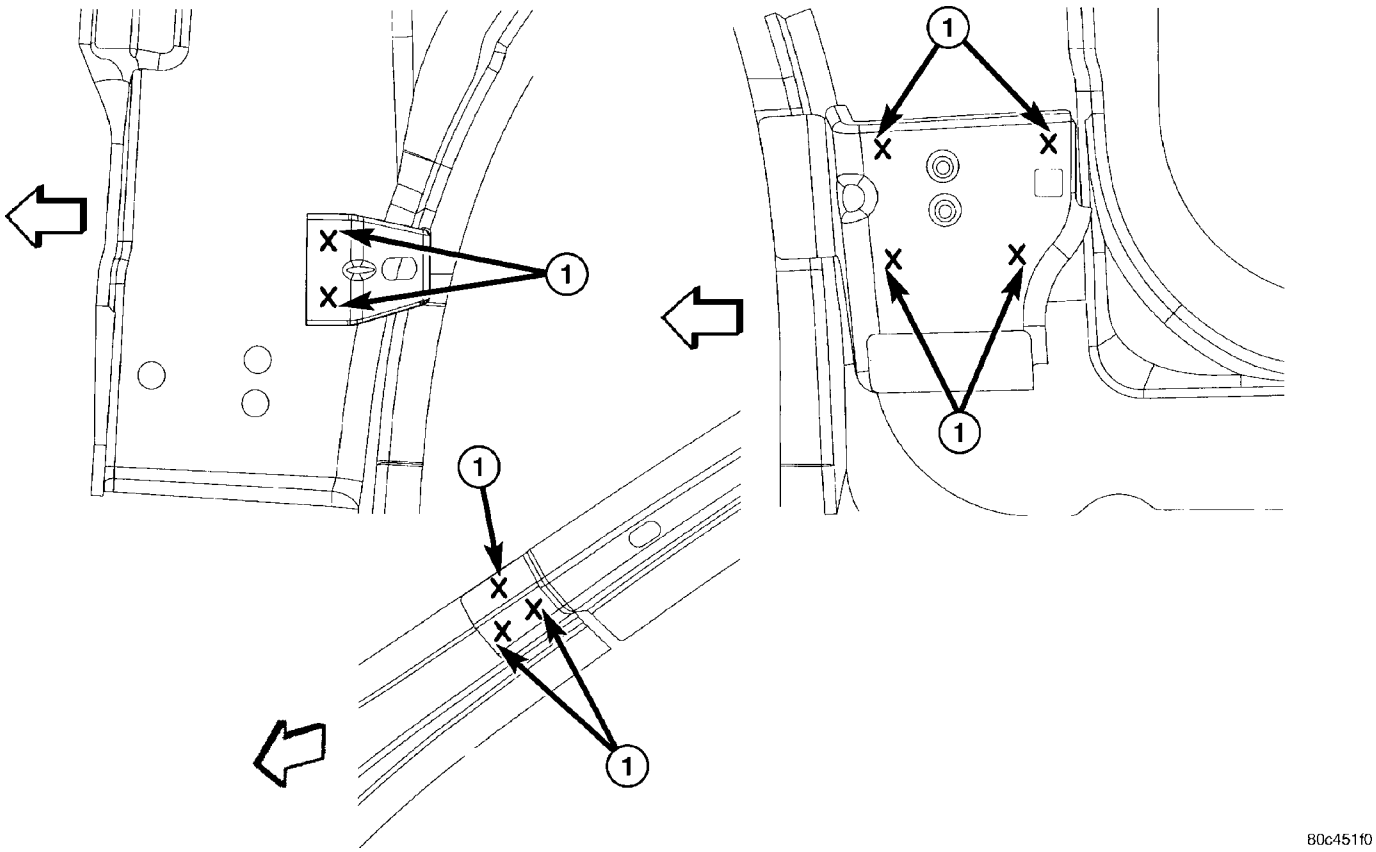

Fig. 55 WINDSHIELD OUTER FRAME AND LOWER HINGE PLATE TO FRONT HINGE PILLAR

1 - WELDING OF TWO PARTS

WELD LOCATIONS (Continued)

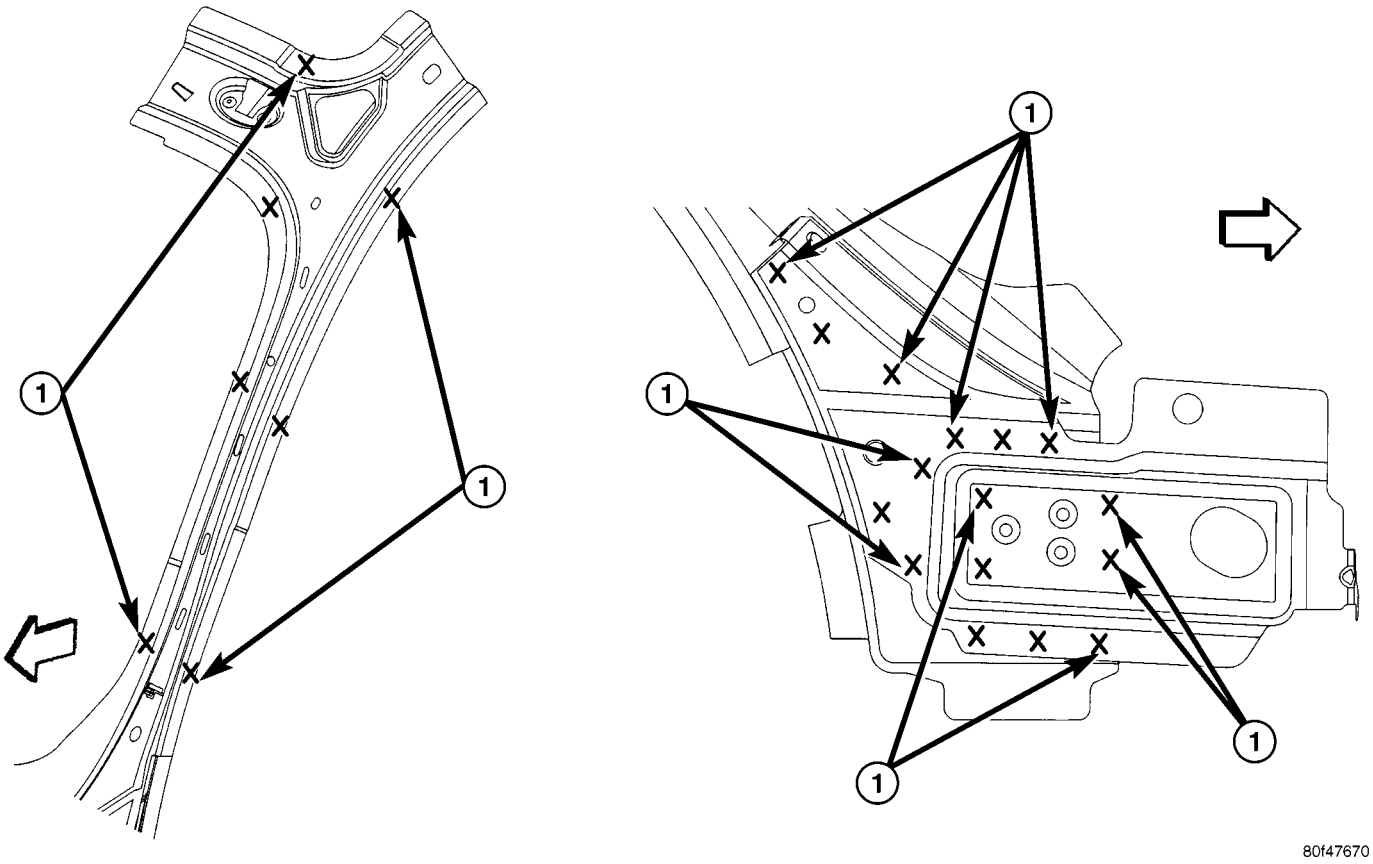

Fig. 56 INNER WINDSHIELD FRAME AND UPPER HINGE BRACKET TO FRONT HINGE PILLAR

1 - WELDING OF TWO PARTS

WELD LOCATIONS (Continued)

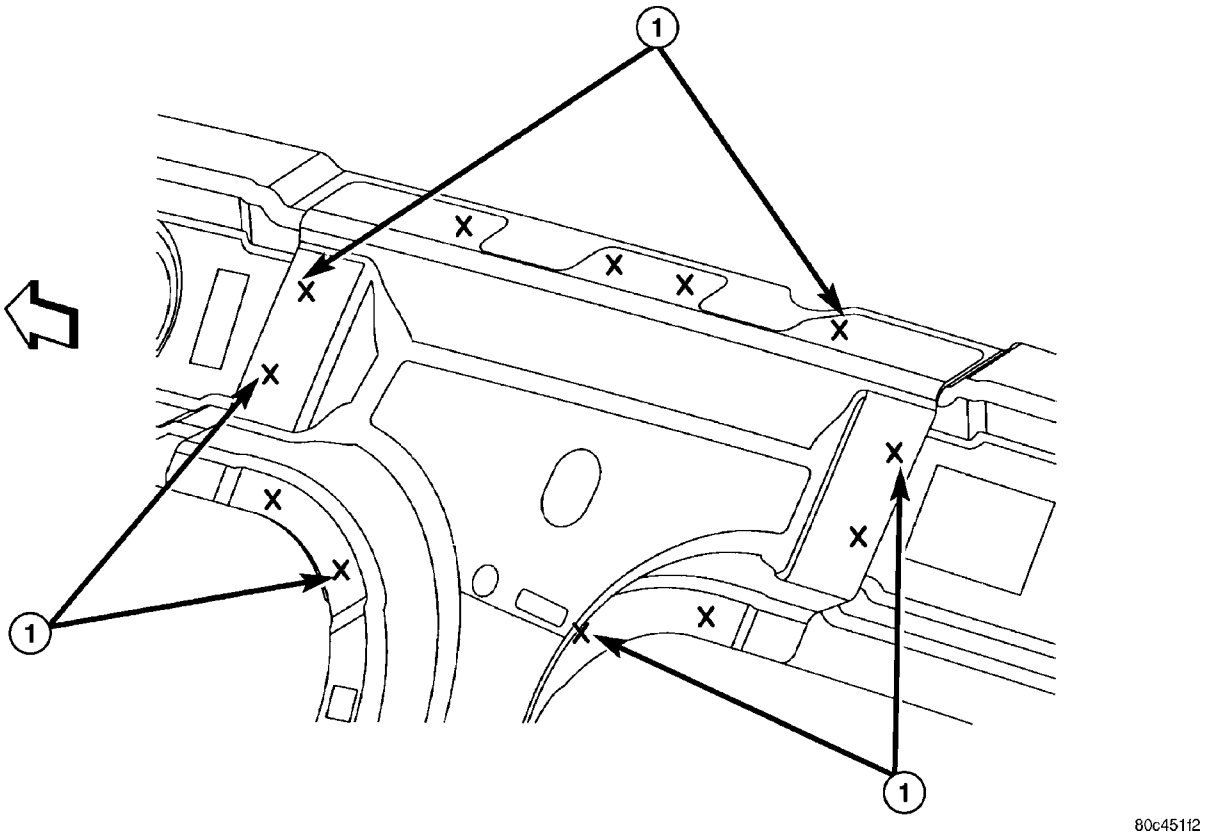

Fig. 57 INNER B-PILLAR TO INNER ROOF SIDE REINFORCEMENT

1 - WELDING OF TWO PARTS

WELD LOCATIONS (Continued)

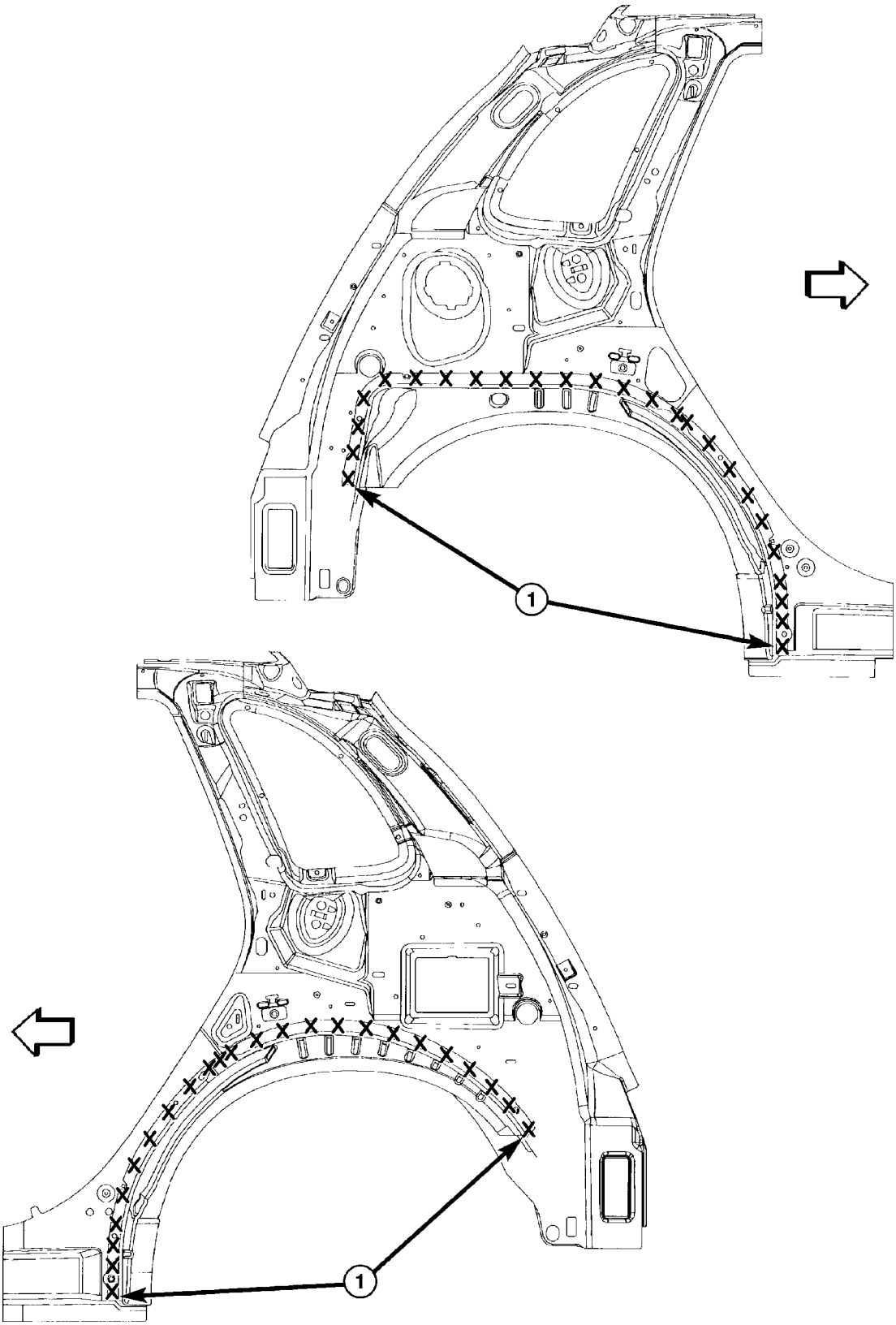

80c45113

Fig. 58 RIGHT AND LEFT INNER WHEELHOUSE TO INNER QUARTER PANEL

1 - WELDING OF TWO PARTS

WELD LOCATIONS (Continued)

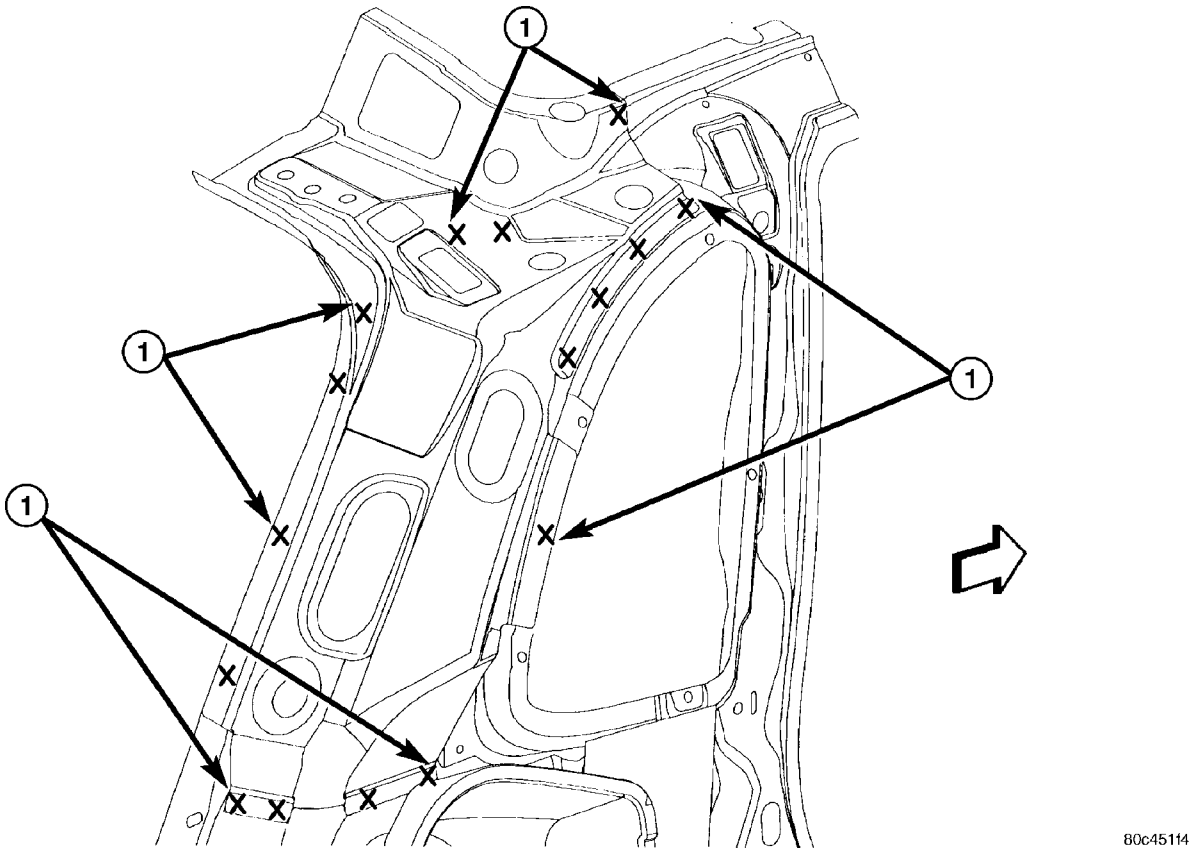

Fig. 59 UPPER INNER C-PILLAR TO INNER QUARTER PANEL

1 - WELDING OF TWO PARTS

WELD LOCATIONS (Continued)

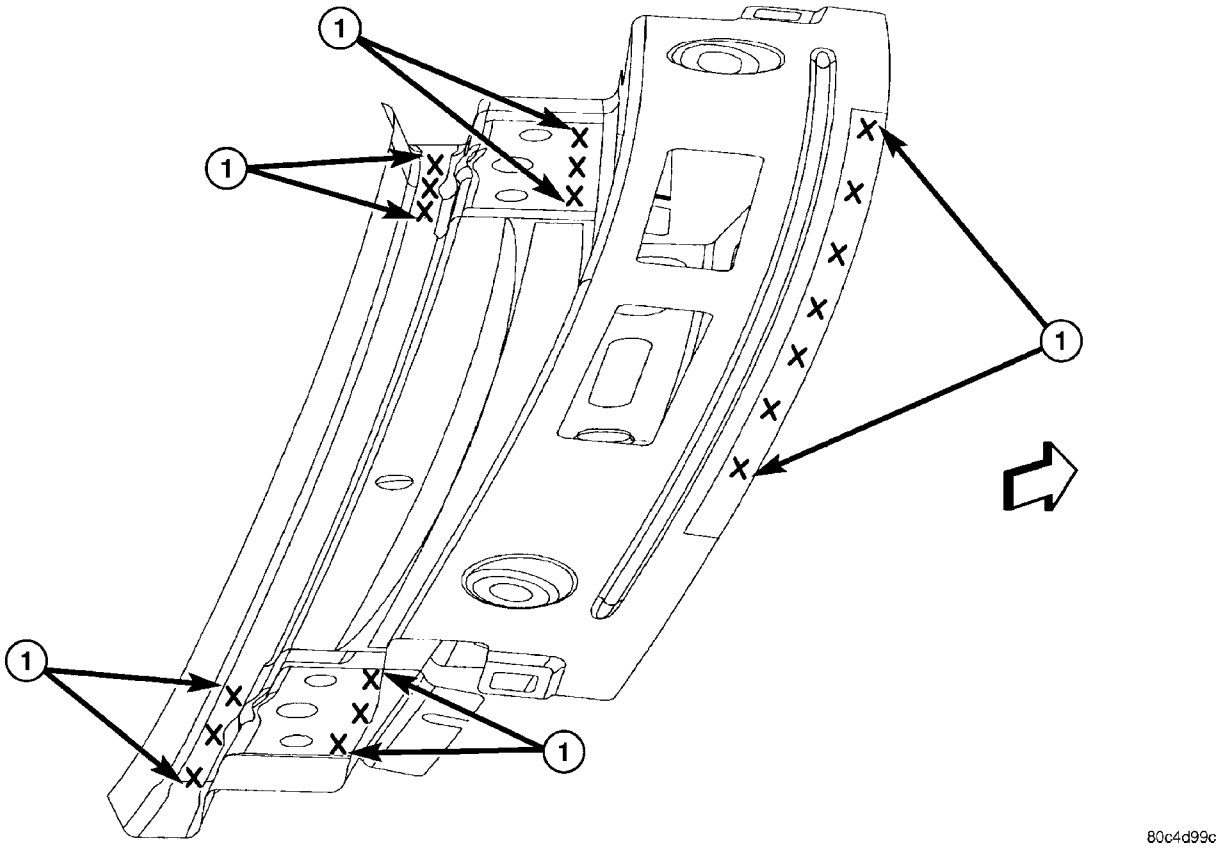

Fig. 60 UPPER LIFTGATE TO REINFORCEMENT TO LOWER LIFTGATE ROOF FRAME

1 - WELDING OF TWO PARTS

WELD LOCATIONS (Continued)

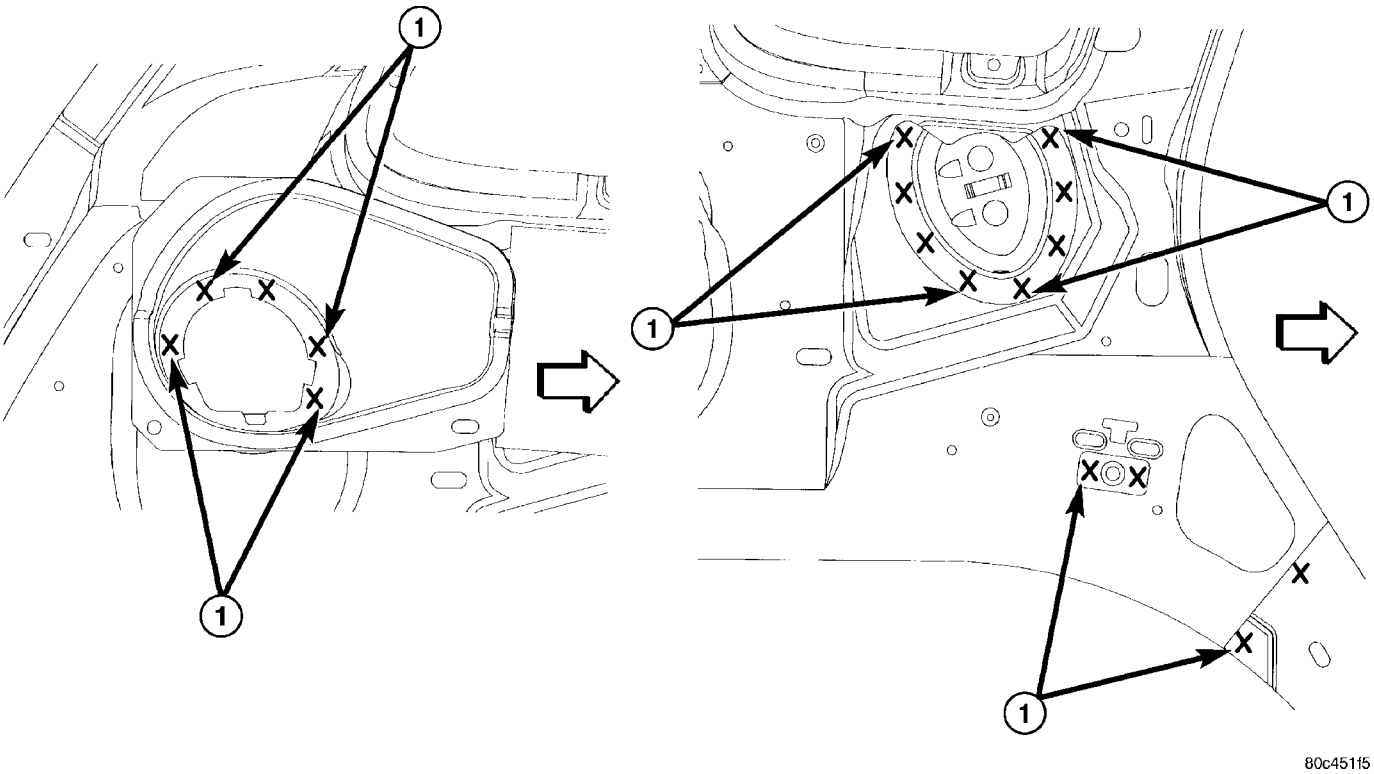

Fig. 61 FUEL FILLER HOUSING, SEAT BACK REINFORCEMENT, SEAT BELT ANCHOR AND JACK PANEL REINFORCEMENT TO INNER QUARTER PANEL

1 - WELDING OF TWO PARTS

WELD LOCATIONS (Continued)

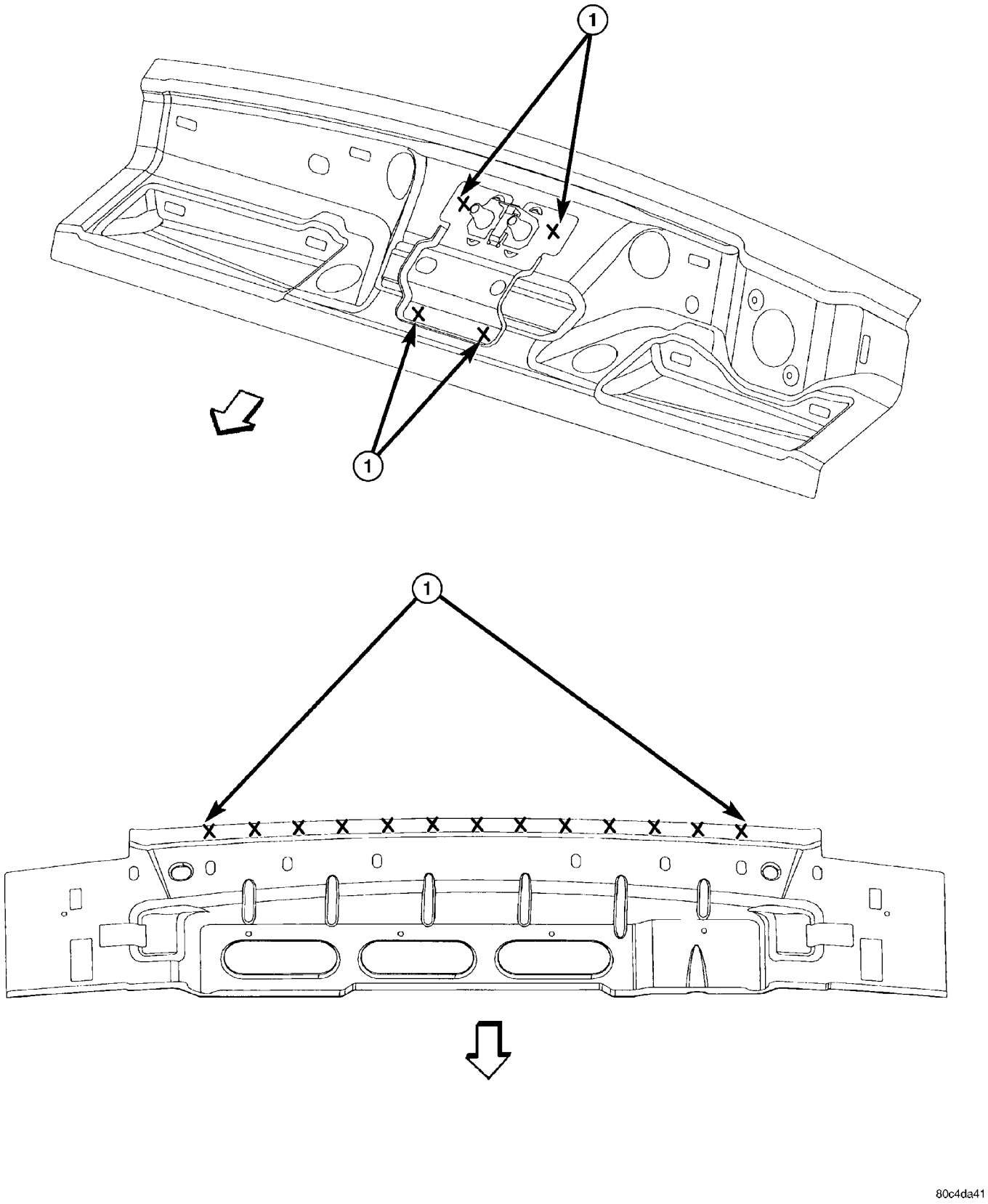

Fig. 62 STRIKER ASSEMBLY TO LOWER LIFTGATE PANEL TO REAR FLOOR PAN CLOSURE PANEL

1 - WELDING OF TWO PARTS

WELD LOCATIONS (Continued)

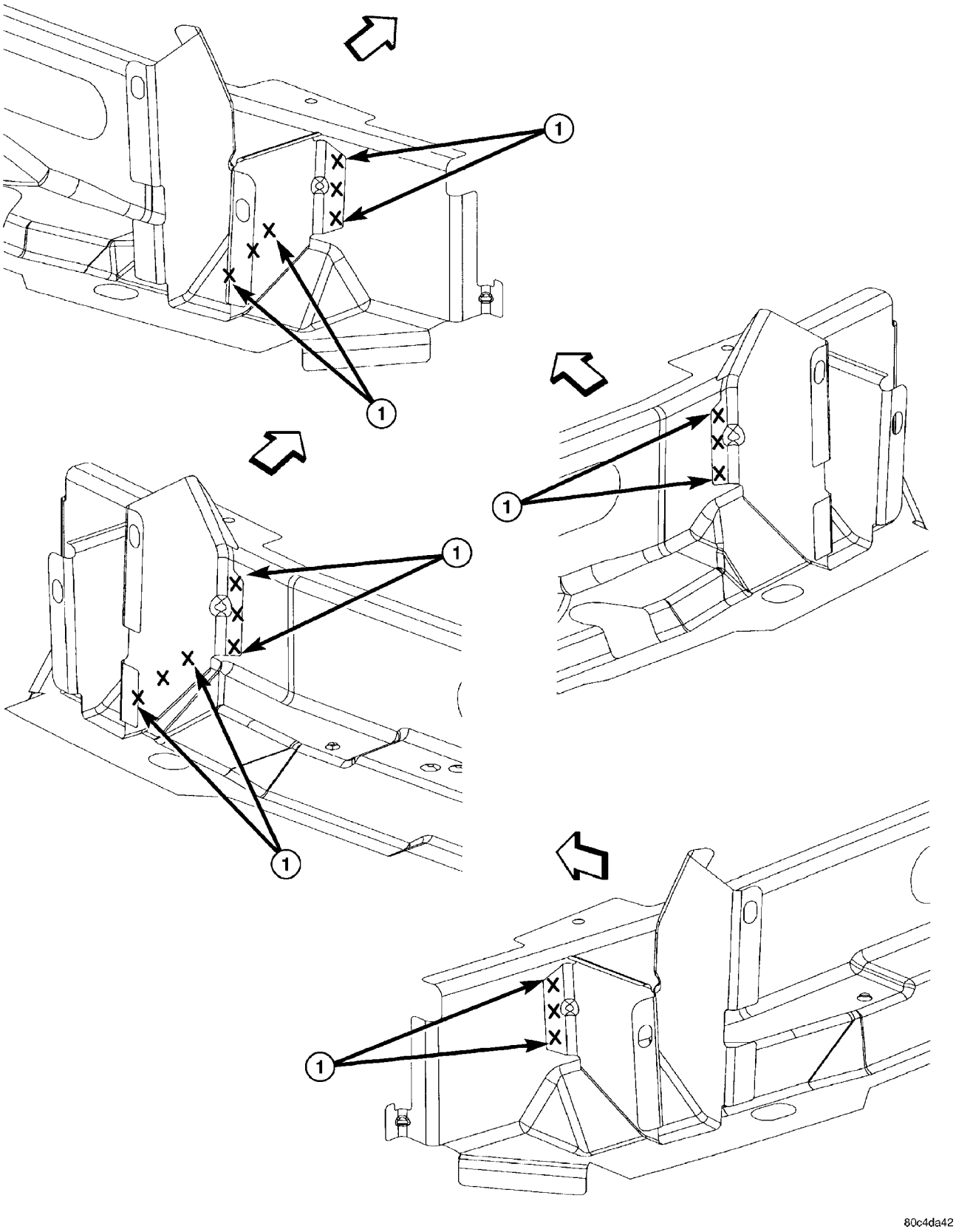

Fig. 63 RIGHT AND LEFT REAR FLOOR PAN CLOSURE REINFORCEMENTS TO SPARE TIRE CLOSURE PANEL

1 - WELDING OF TWO PARTS

WELD LOCATIONS (Continued)

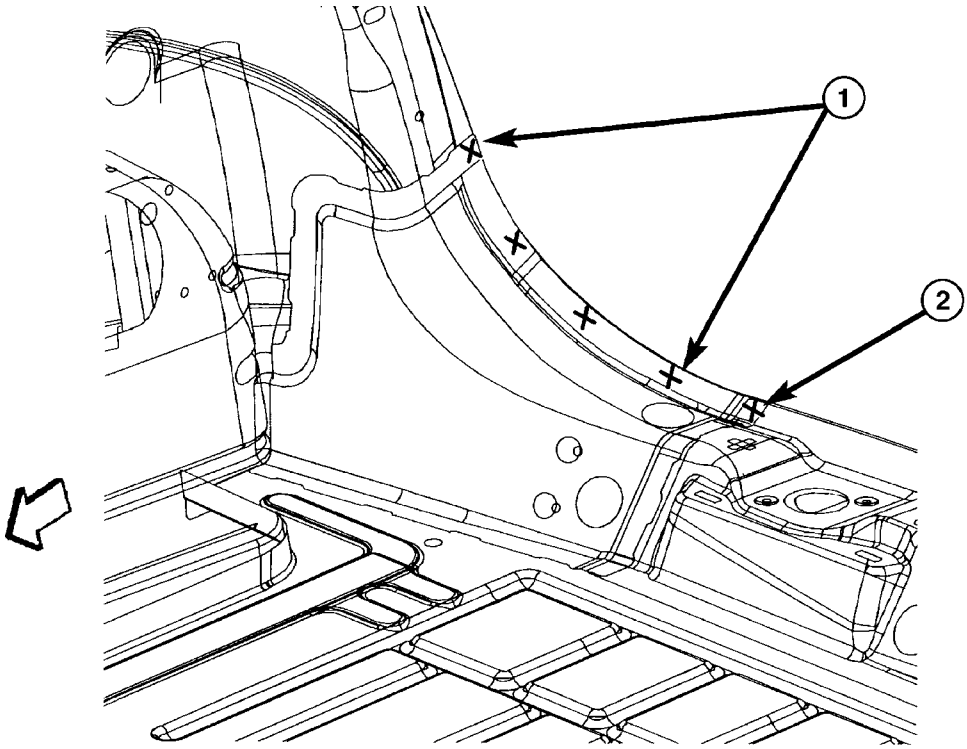

80c4da43

Fig. 64 LOWER LIFTGATE OPENING PANEL TO INNER QUARTER PANEL AND LOWER LIFTGATE PANEL

1 - WELDING OF TWO PARTS
2 - WELDING OF THREE PARTS

WELD LOCATIONS (Continued)

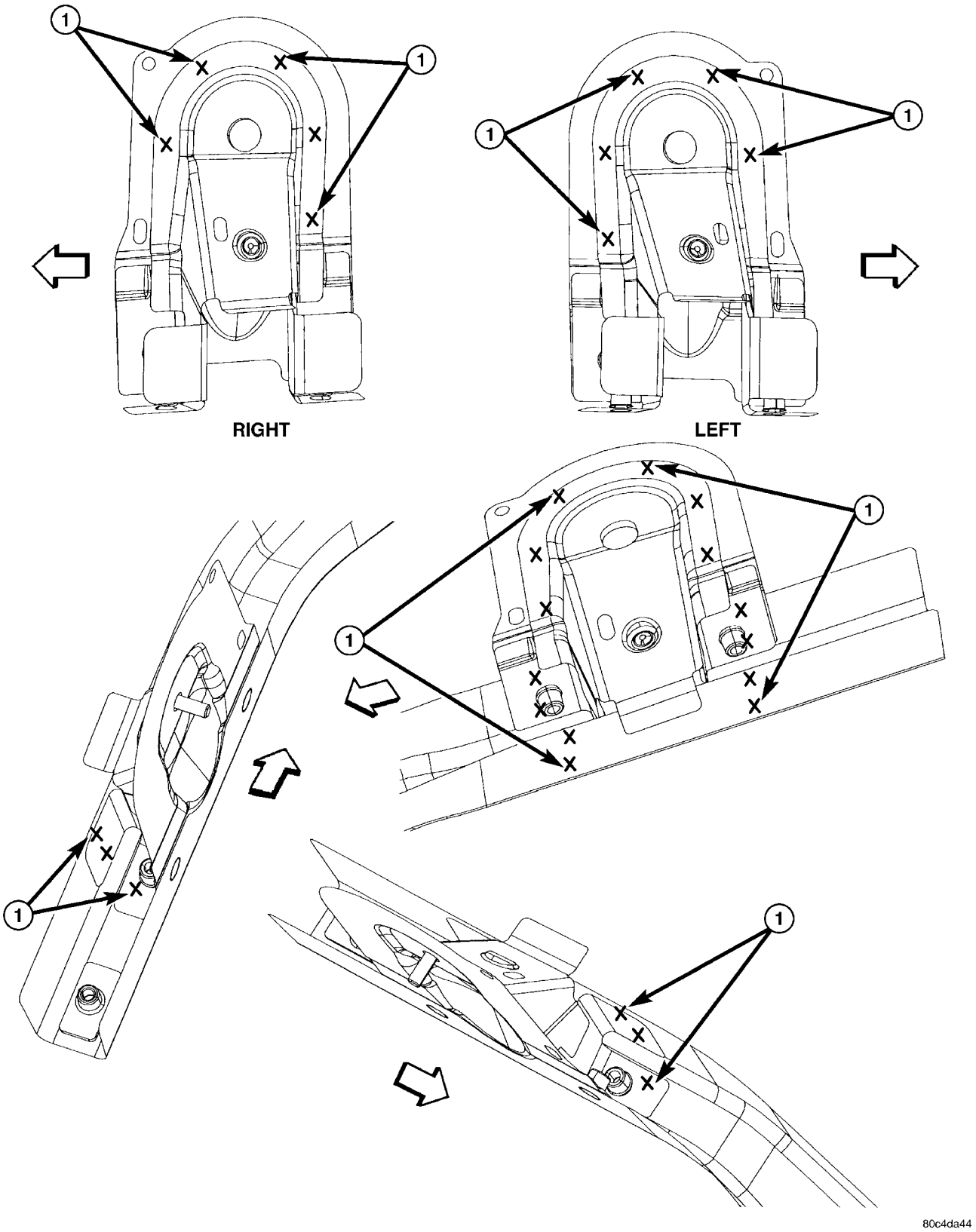

Fig. 65 REAR SHOCK MOUNT GUSSET TO REAR SHOCK MOUNT REINFORCEMENT TO REAR FLOOR PAN SIDE REINFORCEMENT

1 - WELDING OF TWO PARTS

WELD LOCATIONS (Continued)

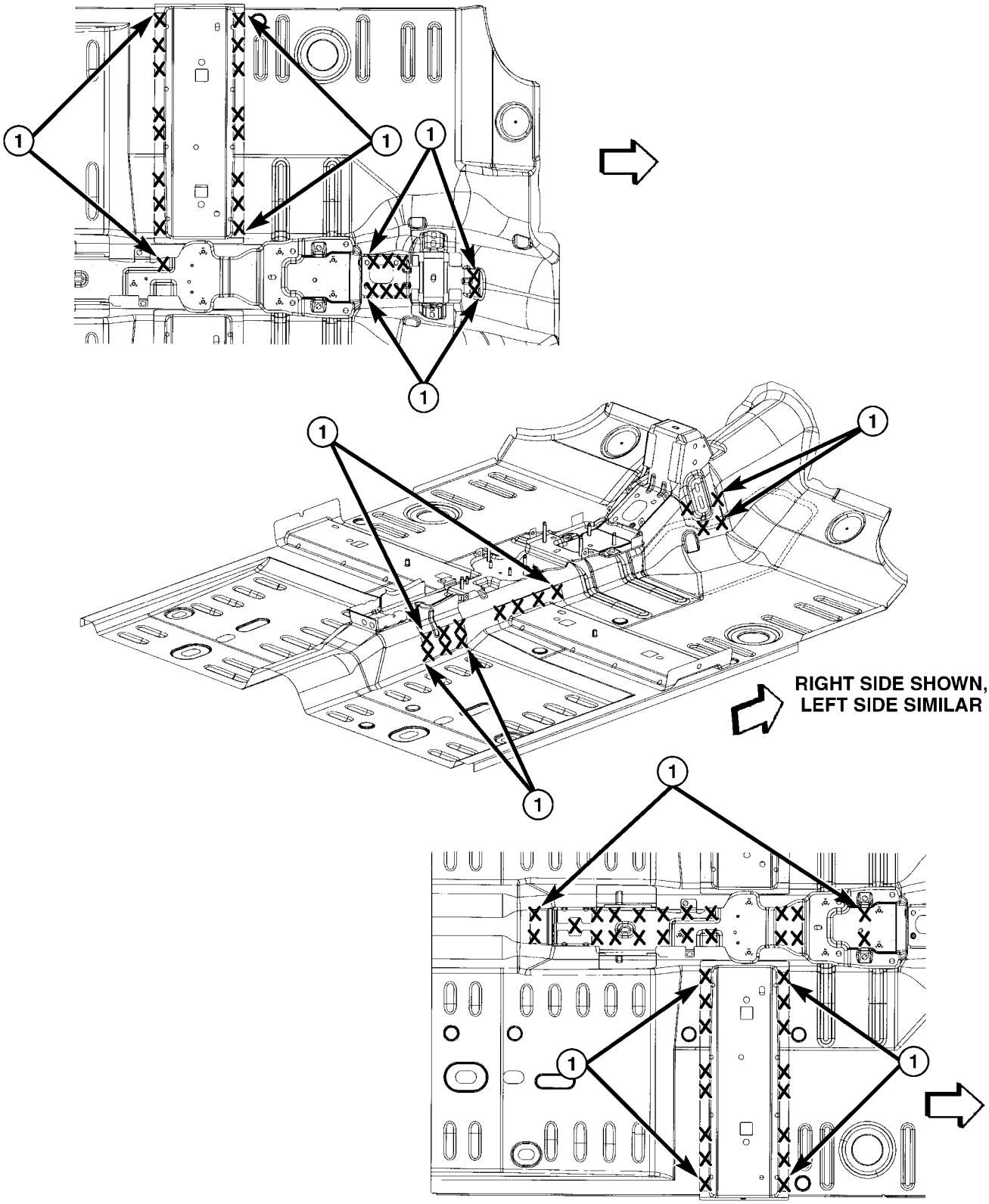

Fig. 66 CONSOLE MOUNTING BRACKET AND FRONT SEAT REINFORCEMENTS TO FRONT FLOOR PAN

1 - WELDING OF TWO PARTS

WELD LOCATIONS (Continued)

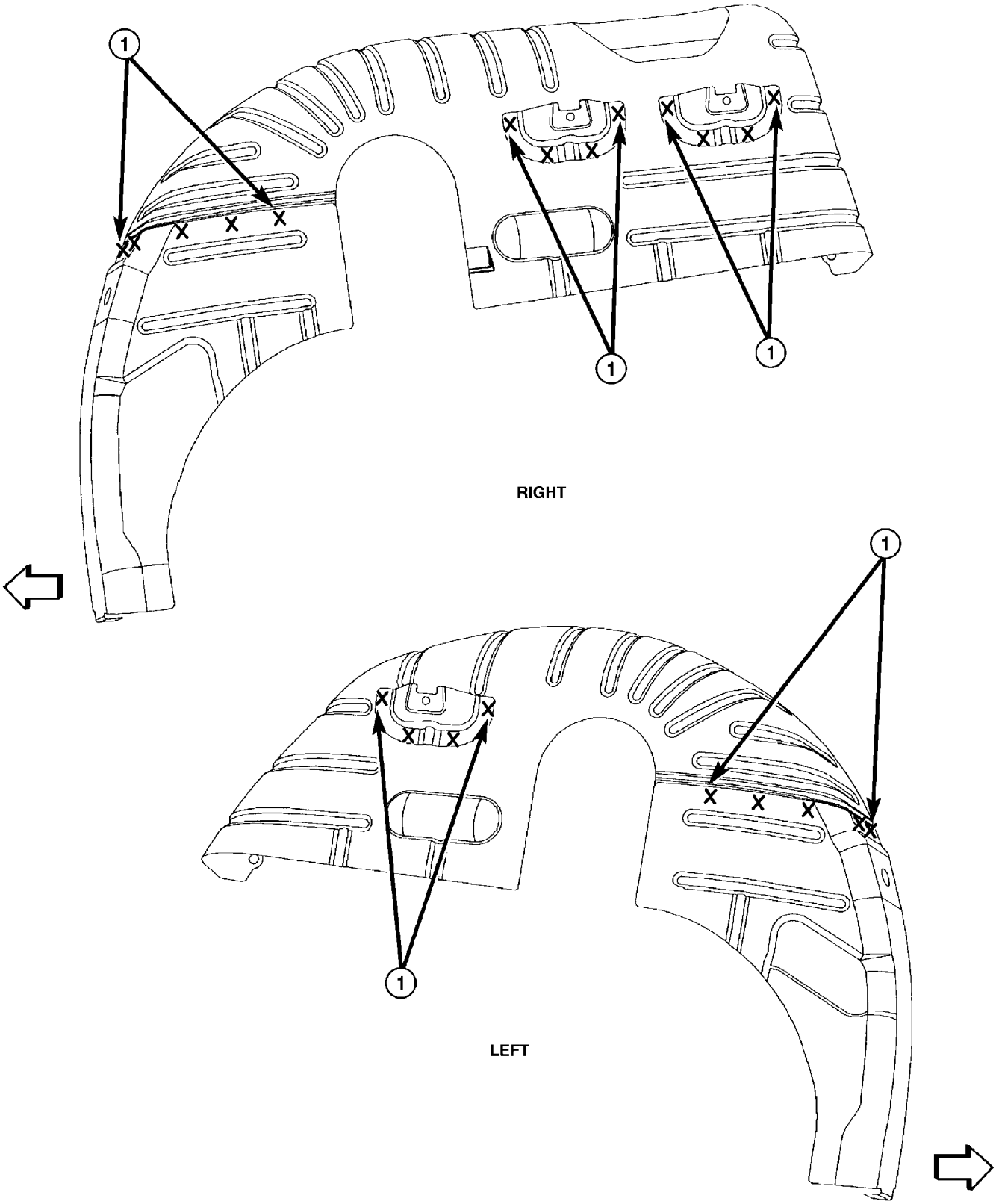

80c4da47

Fig. 67 LEFT INNER WHEELHOUSE TO REAR FLOOR PAN AND SHOCK MOUNT

1 - WELDING OF TWO PARTS

WELD LOCATIONS (Continued)

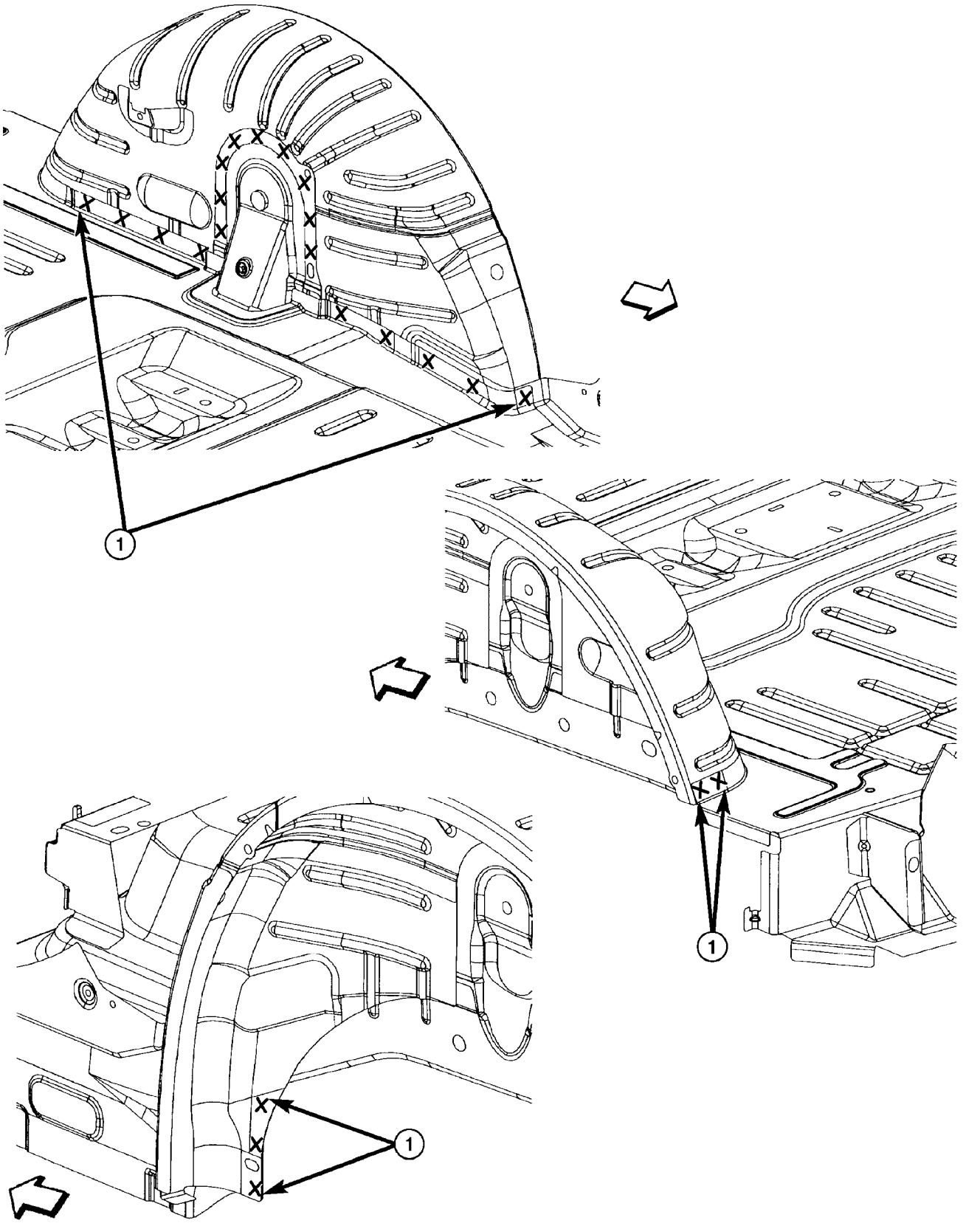

Fig. 68 RIGHT INNER WHEELHOUSE TO REAR FLOOR PAN AND SHOCK MOUNT

1 - WELDING OF TWO PARTS

WELD LOCATIONS (Continued)

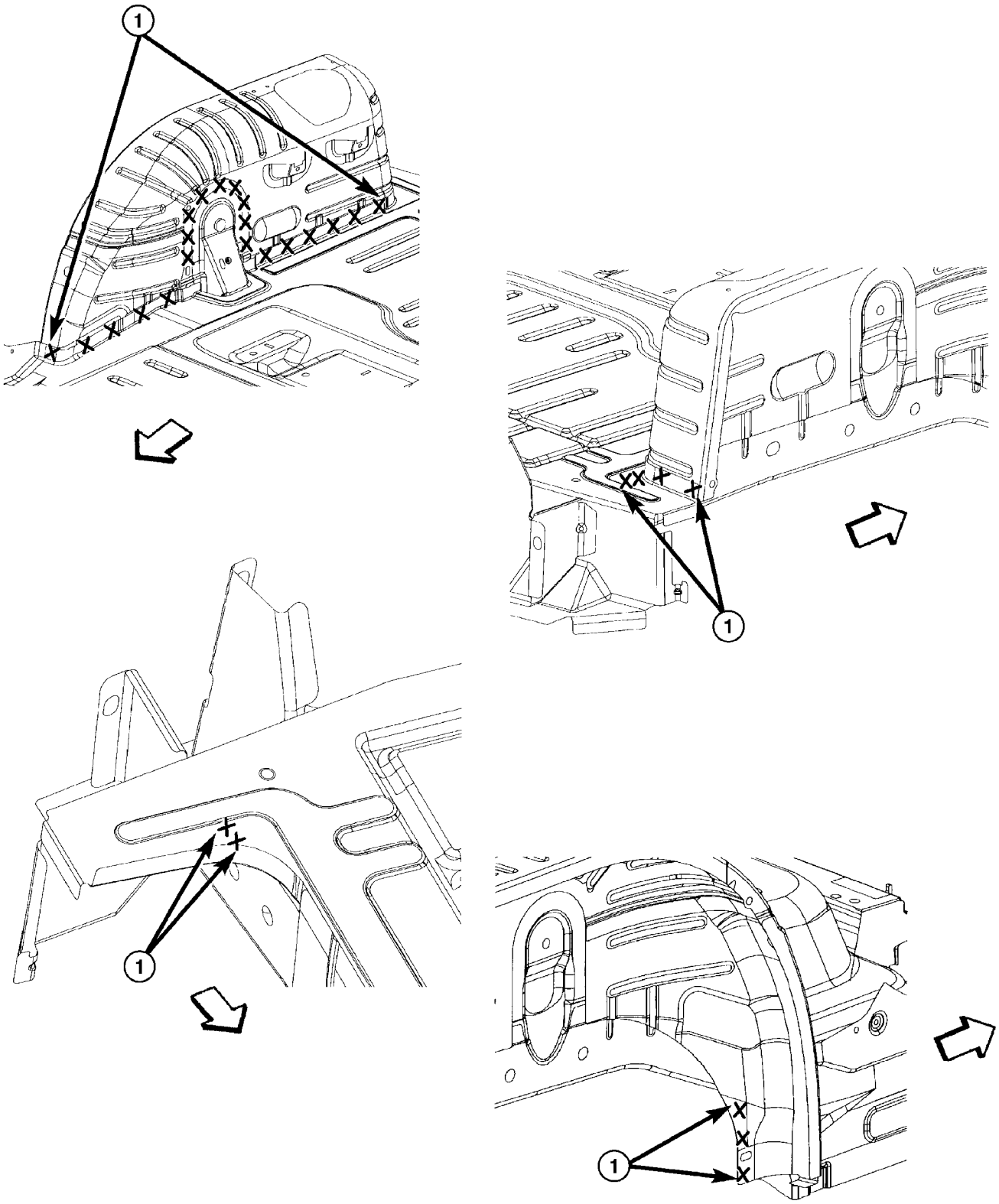

80c4da49

Fig. 69 D.S.I. BEAM TO FRONT FLOOR PAN AND INNER SIDE SILL

1 - WELDING OF TWO PARTS

WELD LOCATIONS (Continued)

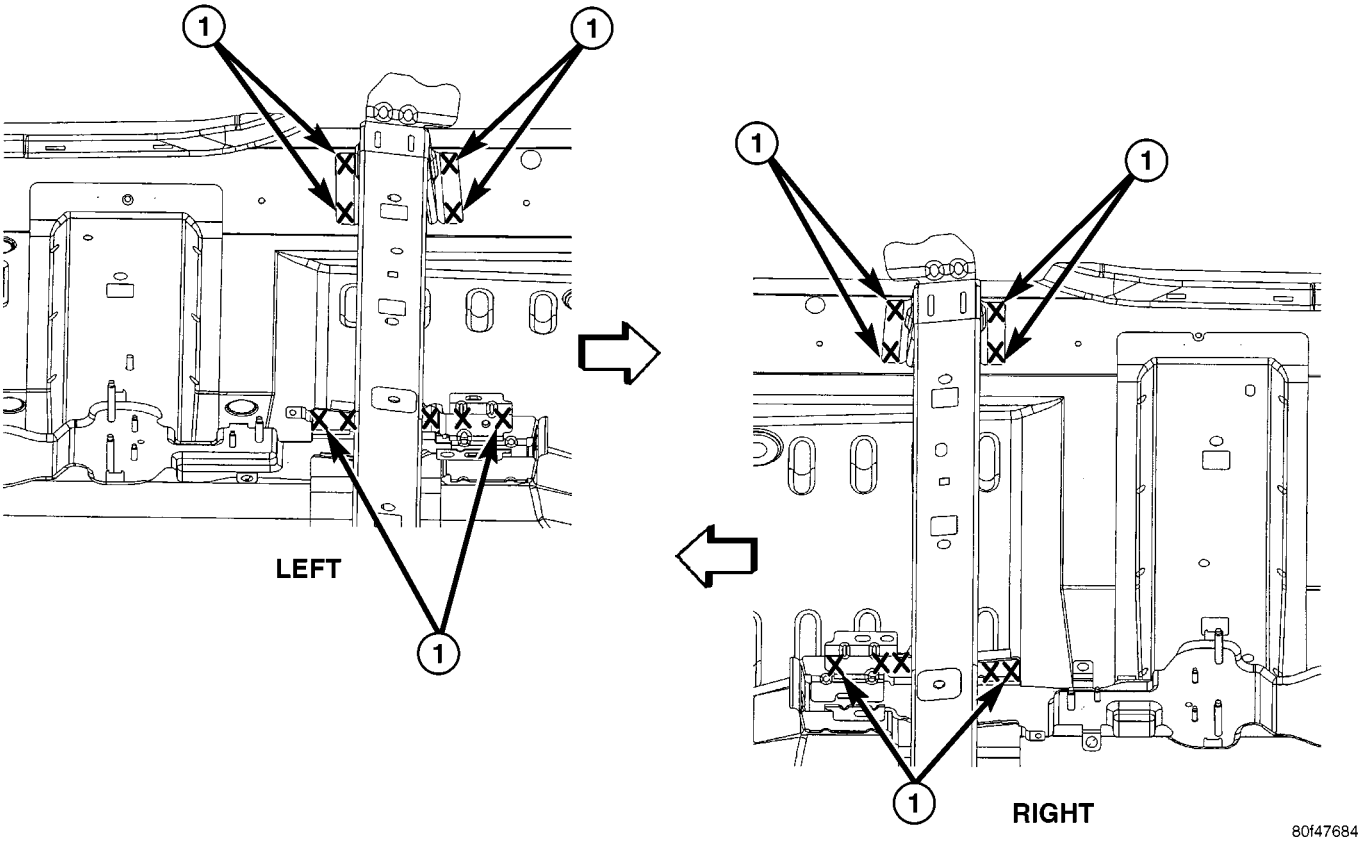

Fig. 70 D.S.I. BEAM TO FRONT FLOOR PAN AND INNER SIDE SILL

1 - WELDING OF TWO PARTS

WELD LOCATIONS (Continued)

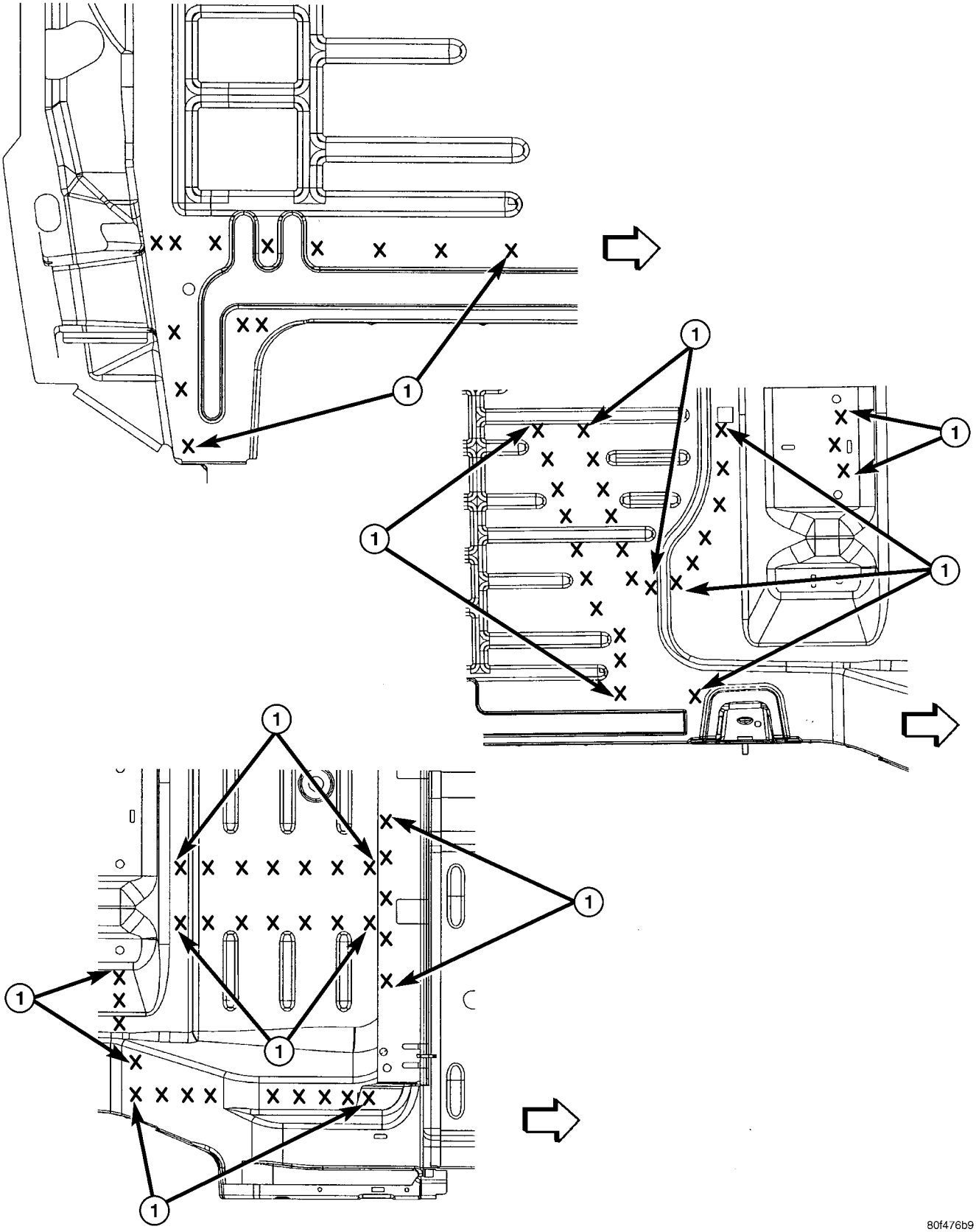

Fig. 71 REAR FLOOR PAN TO REAR CROSSMEMBER AND FUEL TANK SUPPORT- RIGHT SIDE

1 - WELDING OF TWO PARTS

WELD LOCATIONS (Continued)

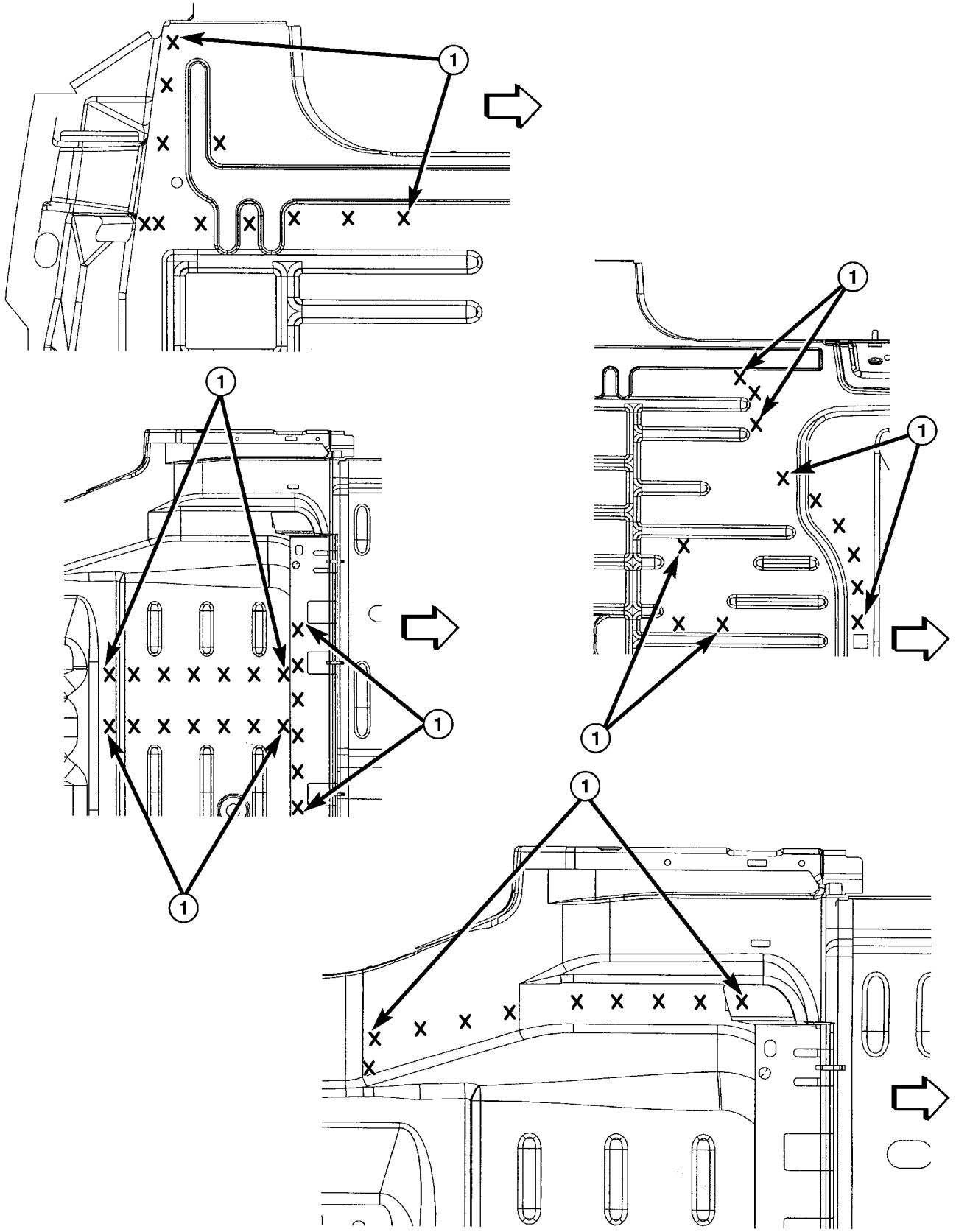

Fig. 72 REAR FLOOR PAN TO REAR CROSSMEMBER AND FUEL TANK SUPPORT - LEFT SIDE

1 - WELDING OF TWO PARTS

WELD LOCATIONS (Continued)

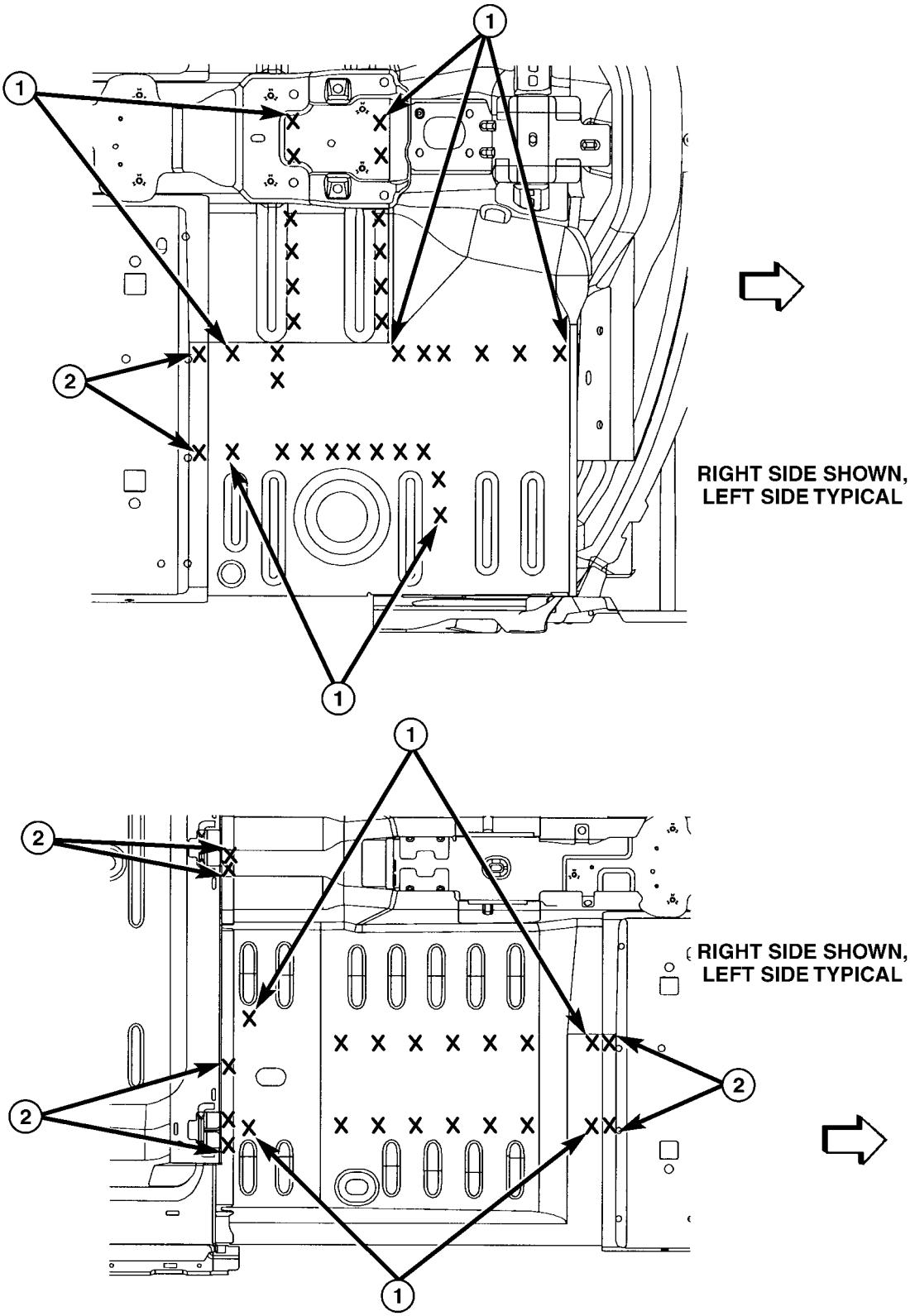

80f47724

Fig. 73 FRONT FLOOR PAN TO FRONT SIDE RAIL REAR EXTENSION - TYPICAL BOTH SIDES

1 - WELDING OF TWO PARTS

2 - WELDING OF THREE PARTS

WELD LOCATIONS (Continued)

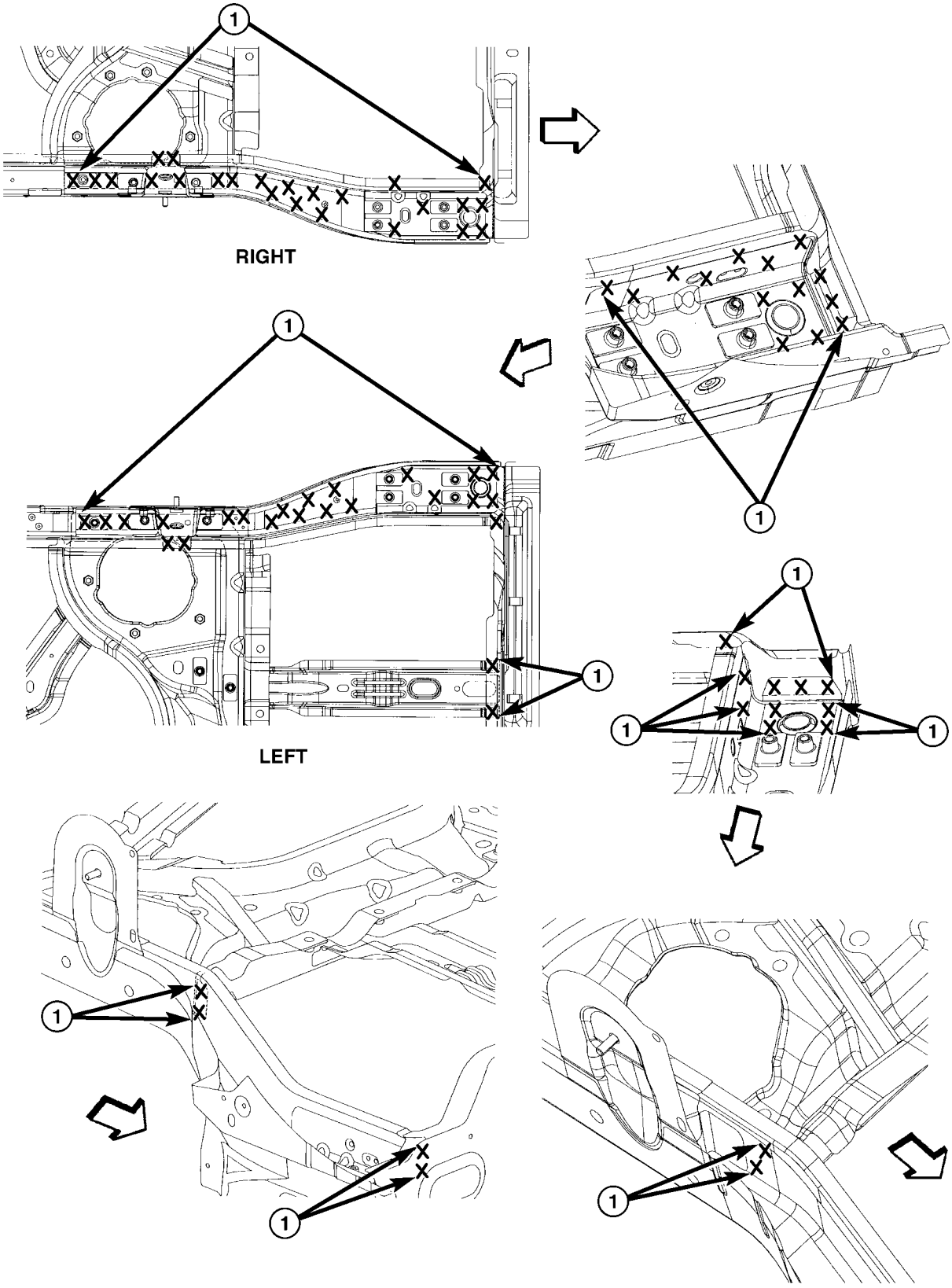

Fig. 74 REAR FLOOR PAN SIDE RAIL TO REAR FLOOR PAN CROSSMEMBER AND REAR FLOOR PAN FRONT KICK UP CROSSMEMBER

1 - WELDING OF TWO PARTS

WELD LOCATIONS (Continued)

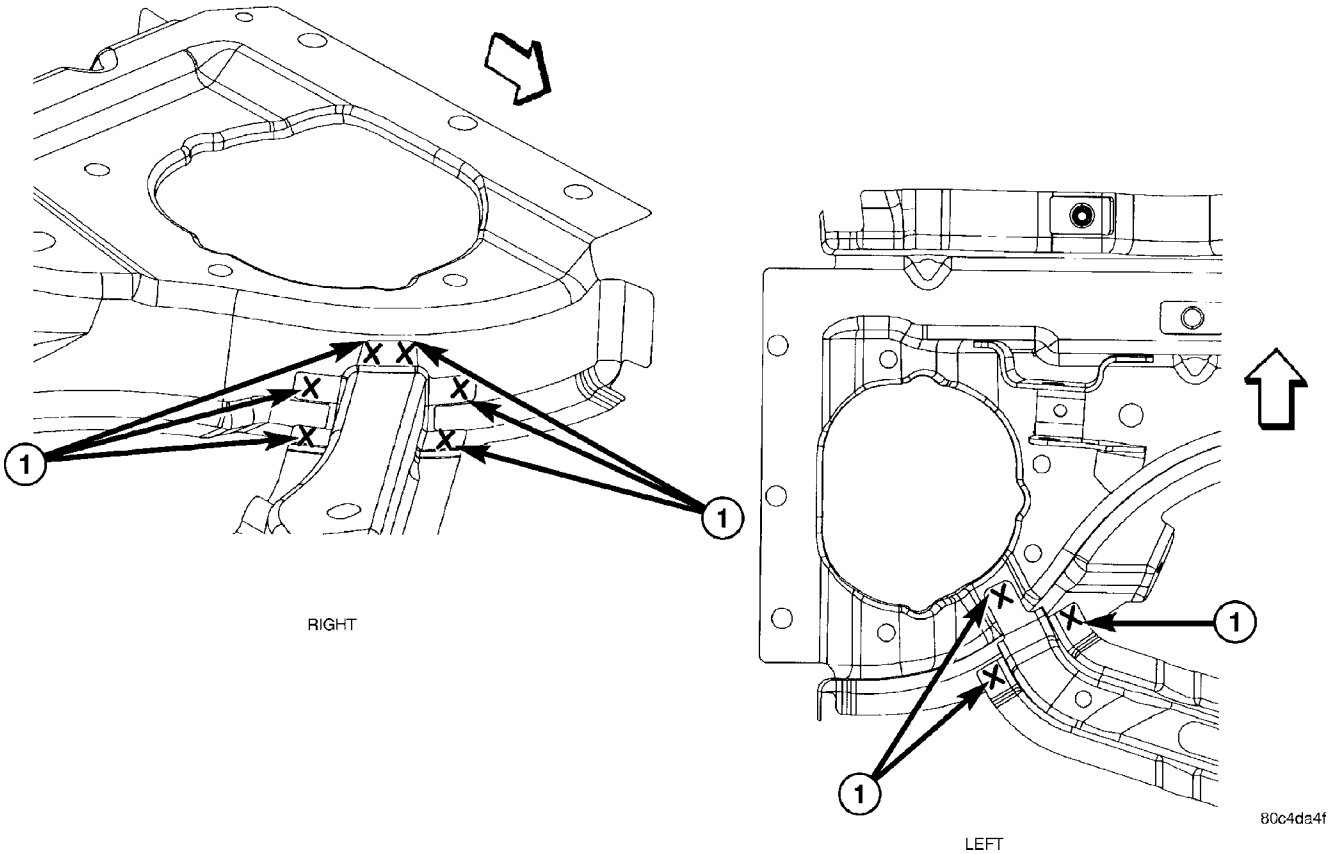

Fig. 75 REAR FLOOR PAN, REAR CROSSMEMBER TO REAR SUSPENSION AND FUEL TANK CROSSMEMBER

1 - WELDING OF TWO PARTS

WELD LOCATIONS (Continued)

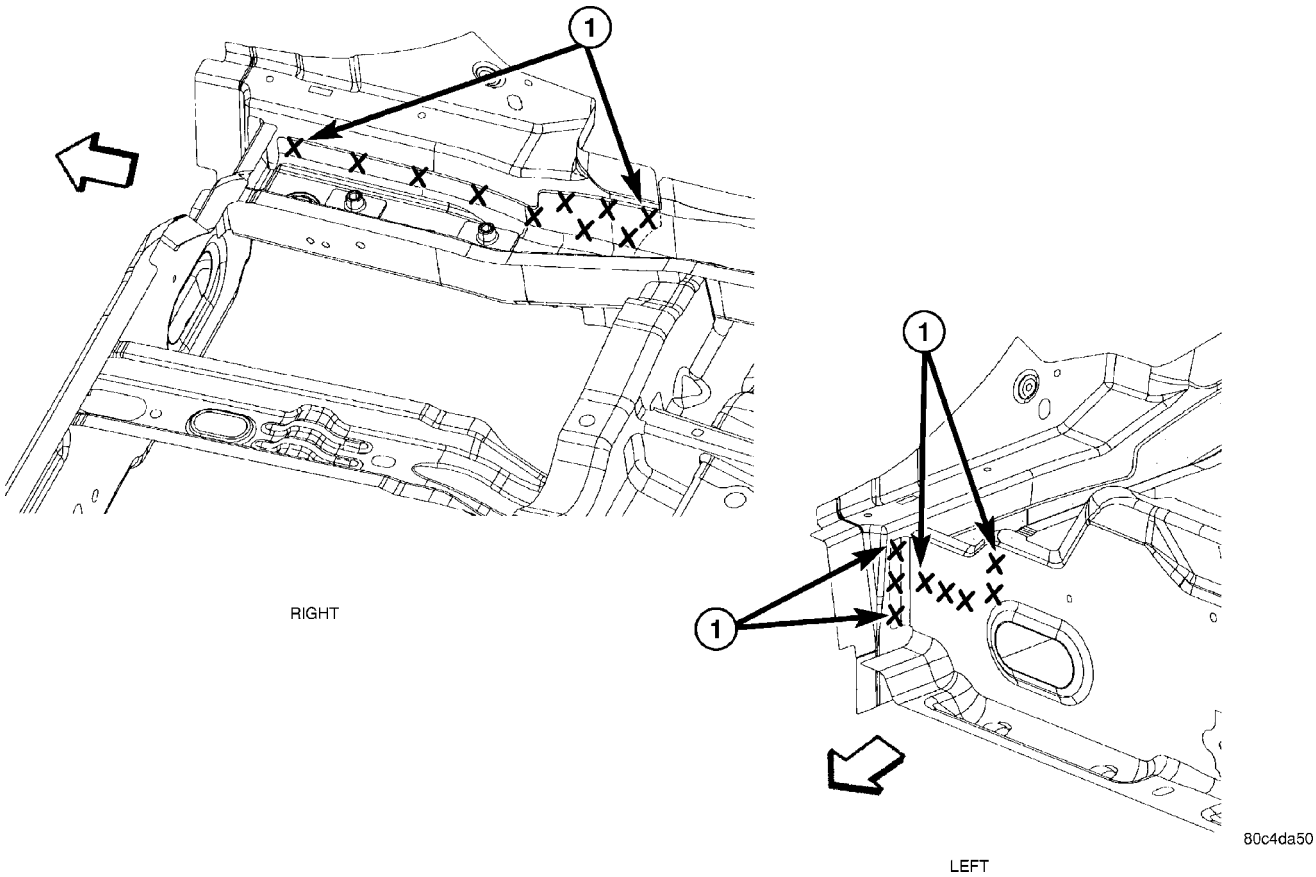

Fig. 76 REAR INNER SIDE SILL TO FLOOR PAN SIDE RAIL AND REAR FLOOR PAN FRONT KICK UP CROSSMEMBER

1 - WELDING OF TWO PARTS

WELD LOCATIONS (Continued)

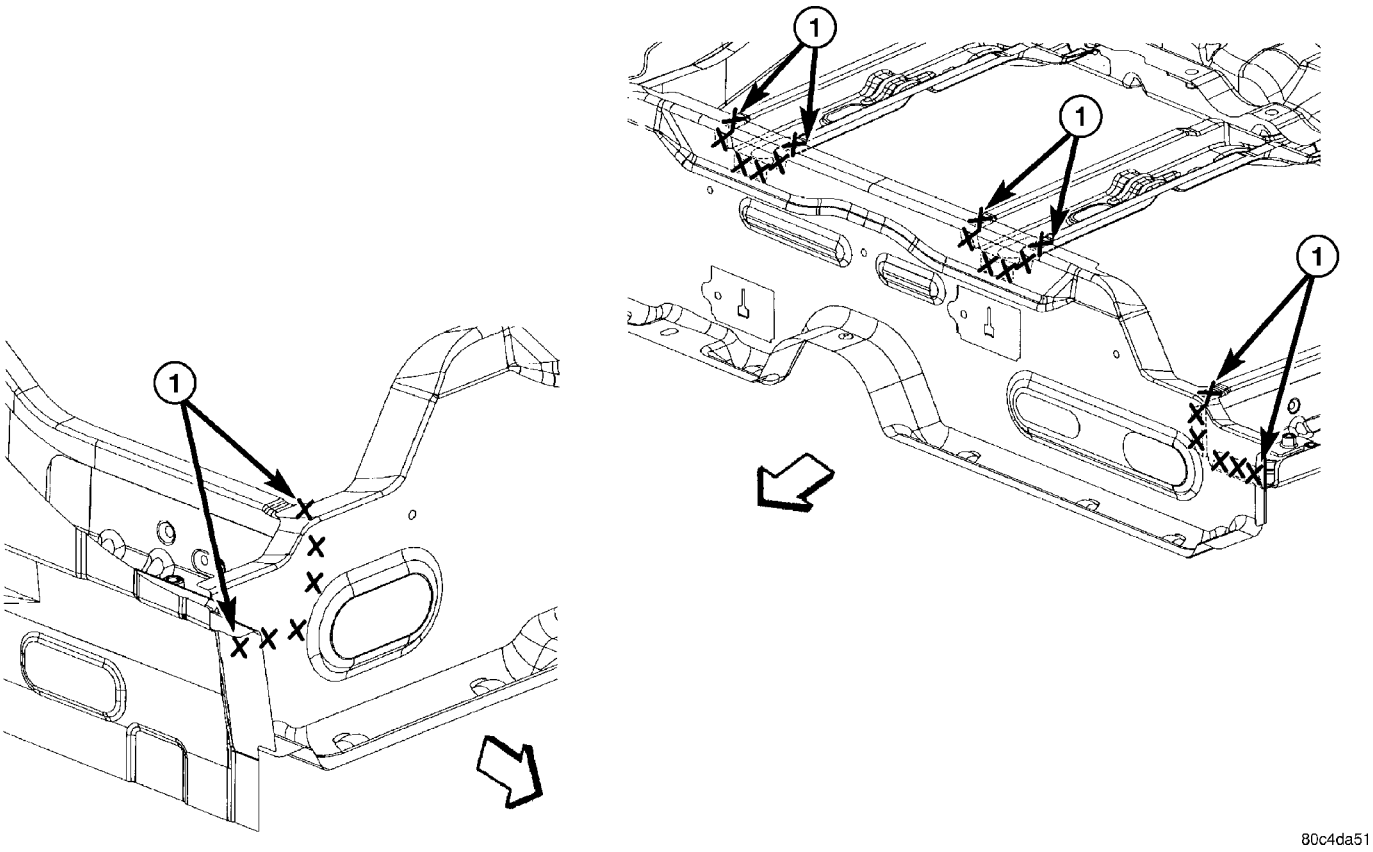

Fig. 77 REAR FLOOR PAN FRONT KICK UP CROSSMEMBER TO FUEL TANK SUPPORT REINFORCEMENT AND REAR FLOOR PAN SIDE RAILS

1 - WELDING OF TWO PARTS

WELD LOCATIONS (Continued)

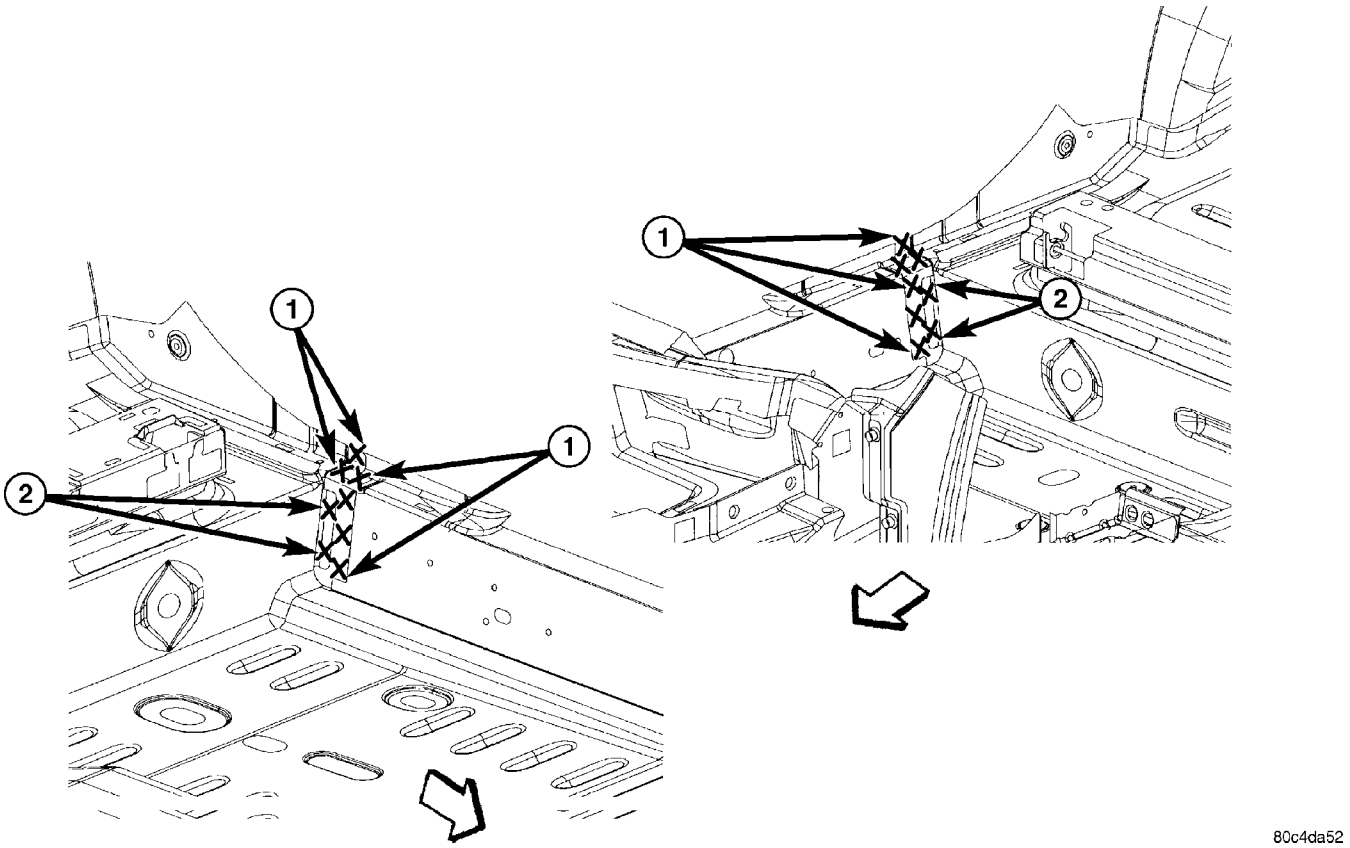

Fig. 78 REAR FLOOR PAN TO INNER BODY SIDE SILL

1 - WELDING OF TWO PARTS
2 - WELDING OF THREE PARTS

WELD LOCATIONS (Continued)

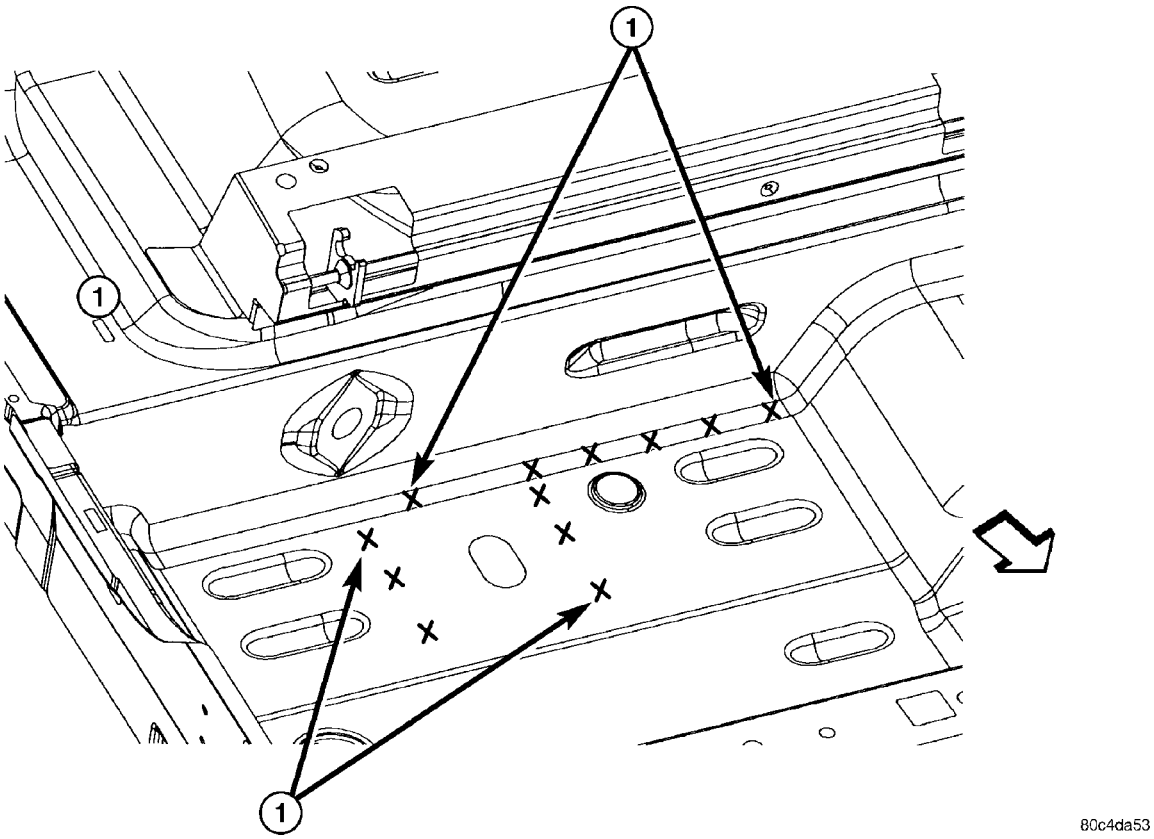

Fig. 79 REAR FLOOR PAN TO REAR FLOOR PAN FRONT KICK UP CROSSMEMBER AND FRONT SIDE RAIL REAR EXTENSION

1 - WELDING OF TWO PARTS

WELD LOCATIONS (Continued)

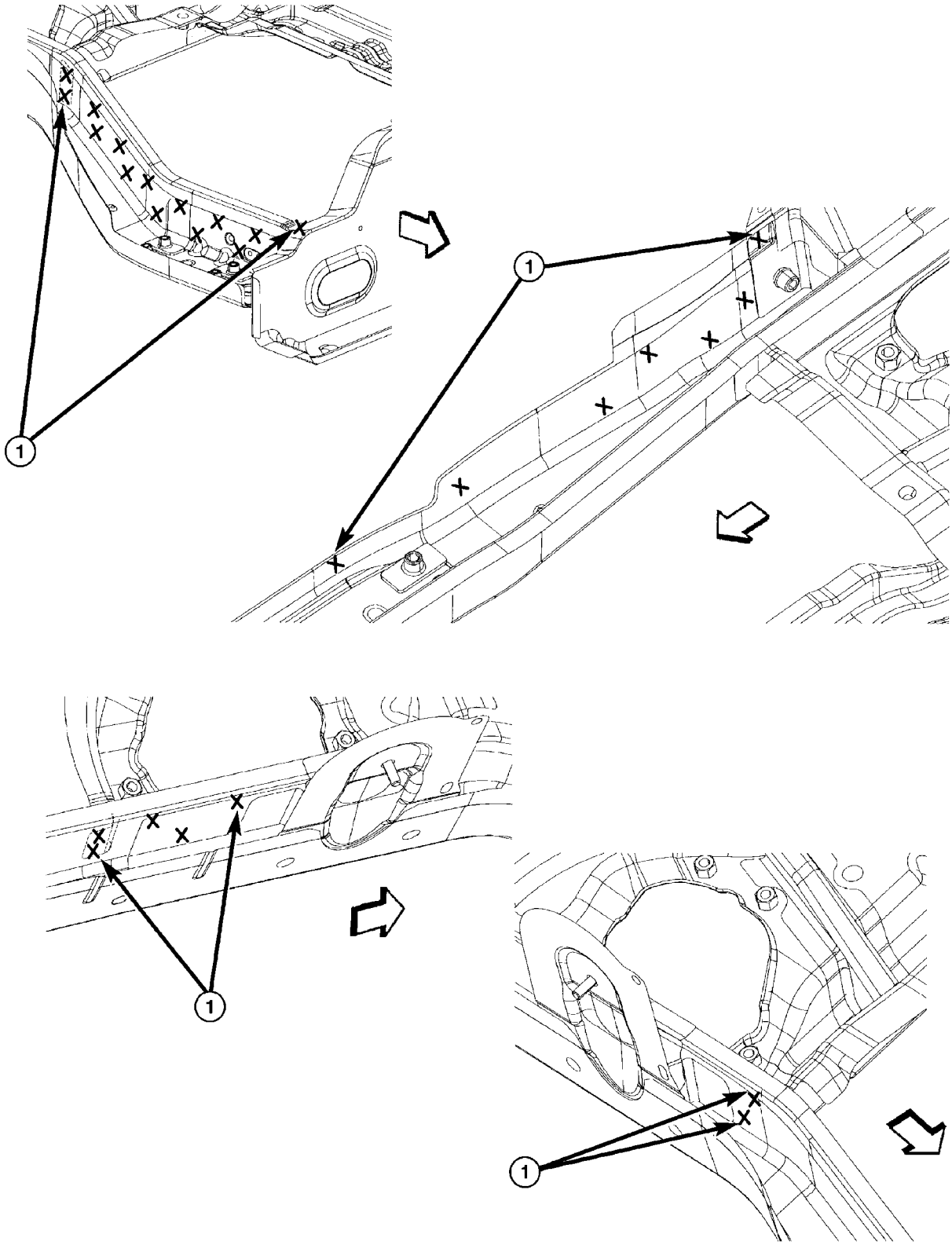

Fig. 80 REAR FLOOR PAN SIDE RAIL REINFORCEMENT TO REAR FLOOR PAN SIDE RAIL TO REAR SUSPENSION CROSSMEMBER

1 - WELDING OF TWO PARTS

HEATING & AIR CONDITIONING

TABLE OF CONTENTS

page

HEATING & AIR COND. - LHD 1

HEATING & AIR COND. - RHD 57

HEATING & AIR COND. - LHD

TABLE OF CONTENTS

page

HEATING & AIR COND. - LHD
DESCRIPTION
ENGINE COOLING SYSTEM REQUIREMENTS 3
SAFETY PRECAUTIONS AND WARNINGS . . . 3
DIAGNOSIS AND TESTING
DIAGNOSIS AND TESTING - HEATER PERFORMANCE TEST 3
DIAGNOSIS AND TESTING - A/C PERFORMANCE TEST 4
STANDARD PROCEDURE
STANDARD PROCEDURE - HANDLING TUBING AND FITTINGS 5
STANDARD PROCEDURE - SYSTEM CHARGE LEVEL TEST 5
STANDARD PROCEDURE - CHARGING A/C SYSTEM 6
STANDARD PROCEDURE - EVACUATING REFRIGERANT SYSTEM 8
STANDARD PROCEDURE - SYSTEM LEAK CHECKING 9
STANDARD PROCEDURE - REFRIGERANT RECOVERY 9
SPECIFICATIONS
A/C APPLICATION TABLE 10
TORQUE 11
A/C COMPRESSOR CLUTCH RELAY
DESCRIPTION 11
OPERATION 12
REMOVAL 12
INSTALLATION 12
A/C HEATER CONTROL
DESCRIPTION 13
DIAGNOSIS AND TESTING - VACUUM CONTROL SYSTEM 13
REMOVAL 15
INSTALLATION 15

page

A/C COMPRESSOR CLUTCH COIL
REMOVAL 16
INSTALLATION 17
A/C HIGH PRESSURE SWITCH
DESCRIPTION 18
REMOVAL 18
INSTALLATION 18
A/C LOW PRESSURE SWITCH
DESCRIPTION 19
OPERATION 19
DIAGNOSIS AND TESTING - A/C LOW PRESSURE CLUTCH CYCLING SWITCH . . . 19
REMOVAL 19
INSTALLATION 19
A/C PRESSURE TRANSDUCER
DESCRIPTION 20
OPERATION 20
DIAGNOSIS AND TESTING - A/C PRESSURE TRANSDUCER 20
REMOVAL 20
INSTALLATION 20
BLOWER MOTOR RESISTOR BLOCK
DESCRIPTION 21
REMOVAL 21
INSTALLATION 21
MODE DOOR CABLE
REMOVAL 22
INSTALLATION 22
RECIRCULATION DOOR ACTUATOR
DESCRIPTION 23
REMOVAL 23
INSTALLATION 24
TEMPERATURE CONTROL CABLES
REMOVAL 24
INSTALLATION 24
DISTRIBUTION
DESCRIPTION
DESCRIPTION - SYSTEM AIRFLOW 25

DESCRIPTION - HEATER AND AIR CONDITIONING . . . 25
AIR FILTER - EXPORT
DESCRIPTION . . . 26
REMOVAL . . . 26
INSTALLATION . . . 26
AIR FLOW DISTRIBUTION
DESCRIPTION . . . 26
OPERATION . . . 27
AIR OUTLETS
DESCRIPTION . . . 27
REMOVAL - CENTER AIR OUTLET DUCT . . . 27
INSTALLATION - CENTER AIR OUTLET DUCT . 27
BLOWER MOTOR
DESCRIPTION - BLOWER MOTOR WHEEL . . . 28
OPERATION . . . 28
DIAGNOSIS AND TESTING - BLOWER MOTOR . . . 28
REMOVAL . . . 28
INSTALLATION . . . 30
HVAC HOUSING
REMOVAL . . . 30
DISASSEMBLY . . . 31
ASSEMBLY . . . 32
INSTALLATION . . . 32
A/C COMPRESSOR
DESCRIPTION
DESCRIPTION . . . 33
DESCRIPTION - COMPRESSOR FRONT SHAFT SEAL . . . 33
OPERATION . . . 33
DIAGNOSIS AND TESTING - COMPRESSOR NOISE . . . 33
REMOVAL . . . 34
INSTALLATION . . . 35
A/C CONDENSER
DESCRIPTION . . . 36
OPERATION . . . 36
REMOVAL . . . 36
INSTALLATION . . . 37
A/C DISCHARGE LINE
DESCRIPTION - DISCHARGE LINE . . . 37
REMOVAL . . . 37
INSTALLATION . . . 37
A/C EVAPORATOR
DESCRIPTION . . . 38
OPERATION . . . 38
REMOVAL . . . 38
INSTALLATION . . . 39
A/C HIGH PRESSURE RELIEF VALVE
REMOVAL - HIGH PRESSURE RELIEF VALVE . 40
INSTALLATION - HIGH PRESSURE RELIEF VALVE . . . 40
A/C VARIABLE ORIFICE TUBE
DESCRIPTION . . . 40
REMOVAL - INSTALLATION . . . 40
ACCUMULATOR
DESCRIPTION . . . 41
OPERATION . . . 41
REMOVAL . . . 41
INSTALLATION . . . 41
CONDENSATION DRAIN TUBE
DESCRIPTION . . . 42
REMOVAL . . . 42
INSTALLATION . . . 43
HEATER CORE
DESCRIPTION . . . 43
OPERATION . . . 43
REMOVAL . . . 43
INSTALLATION . . . 44
HEATER INLET HOSE
REMOVAL . . . 44
INSTALLATION . . . 44
HEATER RETURN HOSE
REMOVAL . . . 45
INSTALLATION . . . 45
LIQUID LINE
DESCRIPTION . . . 46
REMOVAL . . . 46
INSTALLATION . . . 47
REFRIGERANT
DESCRIPTION . . . 47
OPERATION . . . 47
STANDARD PROCEDURE - REFRIGERANT . . . 47
REFRIGERANT OIL
DESCRIPTION . . . 48
OPERATION . . . 48
STANDARD PROCEDURE
STANDARD PROCEDURE - SERVICING REFRIGERANT OIL LEVEL . . . 49
STANDARD PROCEDURE - REFRIGERANT OIL LEVEL CHECK . . . 49
SUCTION LINE
DESCRIPTION . . . 50
OPERATION . . . 51
REMOVAL . . . 51
INSTALLATION . . . 52
SUCTION AND LIQUID LINE ASSEMBLY
REMOVAL . . . 53
INSTALLATION . . . 53
SERVICE PORT VALVE CORE
DESCRIPTION . . . 54
REMOVAL– SERVICE PORT VALVE CORES . . 55
INSTALLATION - SERVICE PORT VALVE CORES . . . 55
A/C VARIABLE ORIFICE TUBE
DESCRIPTION . . . 55
REMOVAL - INSTALLATION . . . 55
CABIN HEATER
DESCRIPTION . . . 55
OPERATION . . . 55
DIAGNOSIS AND TESTING - DIESEL ENGINE CABIN HEATER . . . 56

HEATING & AIR COND. - LHD

DESCRIPTION

ENGINE COOLING SYSTEM REQUIREMENTS

To maintain ample temperature levels from the heating-A/C system, the cooling system must be in proper working order. Refer to Group 0, Lubrication and Maintenance or (Refer to 7 - COOLING - OPERATION)

The use of a bug screen is not recommended. Any obstructions forward of the condenser can reduce the effectiveness of the air conditioning system.

SAFETY PRECAUTIONS AND WARNINGS

WARNING: WEAR EYE PROTECTION WHEN SERVICING THE AIR CONDITIONING REFRIGERANT SYSTEM. SERIOUS EYE INJURY CAN RESULT FROM EYE CONTACT WITH REFRIGERANT. IF EYE CONTACT IS MADE, SEEK MEDICAL ATTENTION IMMEDIATELY.
DO NOT EXPOSE REFRIGERANT TO OPEN FLAME. POISONOUS GAS IS CREATED WHEN REFRIGERANT IS BURNED. AN ELECTRONIC TYPE LEAK DETECTOR IS RECOMMENDED.
LARGE AMOUNTS OF REFRIGERANT RELEASED IN A CLOSED WORK AREA WILL DISPLACE THE OXYGEN AND CAUSE SUFFOCATION.
THE EVAPORATION RATE OF REFRIGERANT AT AVERAGE TEMPERATURE AND ALTITUDE IS EXTREMELY HIGH. AS A RESULT, ANYTHING THAT COMES IN CONTACT WITH THE REFRIGERANT WILL FREEZE. ALWAYS PROTECT SKIN OR DELICATE OBJECTS FROM DIRECT CONTACT WITH REFRIGERANT. R-134a SERVICE EQUIPMENT OR VEHICLE A/C SYSTEM SHOULD NOT BE PRESSURE TESTED OR LEAK TESTED WITH COMPRESSED AIR.
SOME MIXTURES OF AIR and R-134a HAVE BEEN SHOWN TO BE COMBUSTIBLE AT ELEVATED PRESSURES. THESE MIXTURES ARE POTENTIALLY DANGEROUS AND MAY RESULT IN FIRE OR EXPLOSION CAUSING INJURY OR PROPERTY DAMAGE.
ANTIFREEZE IS AN ETHYLENE GLYCOL BASE COOLANT AND IS HARMFUL IF SWALLOWED OR INHALED. SEEK MEDICAL ATTENTION IMMEDIATELY IF SWALLOWED OR INHALED. DO NOT STORE IN OPEN OR UNMARKED CONTAINERS. WASH SKIN AND CLOTHING THOROUGHLY AFTER COMING IN CONTACT WITH ETHYLENE GLYCOL. KEEP OUT OF REACH OF CHILDREN AND PETS.
DO NOT OPEN A COOLING SYSTEM WHEN THE ENGINE IS AT RUNNING TEMPERATURE. PERSONAL INJURY CAN RESULT.

CAUTION: The engine cooling system is designed to develop internal pressure of 97 to 124 kPa (14 to 18 psi). Allow the vehicle to cool a minimum of 15 minutes before opening the cooling system (Refer to 7 - COOLING - DIAGNOSIS AND TESTING).

DIAGNOSIS AND TESTING

DIAGNOSIS AND TESTING - HEATER PERFORMANCE TEST

PRE-DIAGNOSTIC PREPARATIONS

Review Safety Precautions and Warnings(Refer to 24 - HEATING & AIR CONDITIONING - DESCRIPTION) in this group before performing the following procedures.

Check the coolant level, drive belt tension, vacuum line connections, radiator air flow and fan operation. Start engine and allow to warm up to normal temperature.

WARNING: DO NOT REMOVE RADIATOR CAP WHEN ENGINE IS HOT, PERSONAL INJURY CAN RESULT.

If vehicle has been run recently, wait 15 minutes before removing cap. Place a rag over the cap and turn it to the first safety stop. Allow pressure to escape through the overflow tube. When the system stabilizes, remove the cap completely.

MAXIMUM HEATER OUTPUT: TEST AND ACTION

Engine coolant is provided to the heater system by two 16 mm (5/8 inch inside diameter) heater hoses. With engine idling at normal running temperature, set the control to maximum heat, floor, and high blower setting. Using a test thermometer, check the air temperature coming from the floor outlets, refer to Temperature Reference chart.

TEMPERATURE REFERENCE CHART

Ambient Temp.		Minimum Floor Outlet Temp.	
Celsius	Fahrenheit	Celsius	Fahrenheit
15.5°	60°	62.2°	144°
21.1°	70°	63.8°	147°
26.6°	80°	65.5°	150°
32.2°	90°	67.2°	153°

HEATING & AIR COND. - LHD (Continued)

If the floor outlet air temperature is insufficient (Refer to 7 - COOLING - DIAGNOSIS AND TESTING. Both heater hoses should be HOT to the touch (coolant return hose should be slightly cooler than the supply hose). If coolant return hose is much cooler than the supply hose, locate and repair engine coolant flow obstruction in heater system.

POSSIBLE LOCATIONS OR CAUSE OF OBSTRUCTED COOLANT FLOW

(1) Pinched or kinked heater hoses.
(2) Improper heater hose routing.
(3) Plugged heater hoses or supply and return ports at cooling system connections.
(4) Plugged heater core.
(5) Air locked heater core.
(6) If coolant flow is verified and outlet temperature is insufficient, a mechanical problem may exist.

POSSIBLE LOCATION OR CAUSE OF INSUFFICIENT HEAT

(1) Obstructed cowl air intake.
(2) Obstructed heater system outlets.
(3) Blend-air door not functioning properly.

TEMPERATURE CONTROL

If temperature cannot be adjusted with the Temperature knob one of the following could require service:
(1) Blend-air door binding.
(2) Faulty temperature control cable.
(3) Improper engine coolant temperature.
(4) Faulty heater-A/C Control.

DIAGNOSIS AND TESTING - A/C PERFORMANCE TEST

The air conditioning system is designed to remove heat and humidity from the air entering the passenger compartment. The evaporator, located in the heater-A/C unit, is cooled to temperatures near the freezing point. As warm damp air passes over the fins in the evaporator, moisture in the air condenses to water, dehumidifying the air. Condensation on the evaporator fins reduces the evaporators ability to absorb heat. During periods of high heat and humidity, an air conditioning system will be less effective. With the instrument control set to RECIRC, only air from the passenger compartment passes through the evaporator. As the passenger compartment air dehumidifies, A/C performance levels rise.

PERFORMANCE TEST PROCEDURE

Review Safety Precautions and Warnings in this group before performing (Refer to 24 - HEATING & AIR CONDITIONING - DESCRIPTION) this procedure. Air temperature in test room and on vehicle must be 21° C (70°F) minimum for this test.

NOTE: When connecting the service equipment coupling to the line fitting, verify that the valve of the coupling is fully closed. This will reduce the amount of effort required to make the connection.

(1) Connect a tachometer and manifold gauge set.
(2) Set control to A/C, RECIRC, and PANEL, temperature lever on full cool and blower on high.
(3) Start engine and hold at 1000 rpm with A/C clutch engaged.
(4) Engine should be warmed up with doors closed and windows open.
(5) Insert a thermometer in the left center A/C panel outlet and operate the engine for five minutes. The A/C clutch may cycle depending on ambient conditions. If the clutch cycles, unplug the low pressure cycling clutch switch wire harness connector from the switch located on the accumulator. Place a jumper wire across the terminals of the low pressure cycling clutch switch wire harness connector.
(6) With the A/C clutch engaged, compare the discharge air temperature to the A/C Performance Temperatures charts.
(7) If the discharge air temperature fails to meet the specifications in the performance temperature charts.(Refer to 24 - HEATING & AIR CONDITIONING - STANDARD PROCEDURE) for further diagnosis.

HEATING & AIR COND. - LHD (Continued)

A/C PERFORMANCE TEMPERATURES- (NON-TURBO ENGINES ONLY)

Ambient Temperature	21°C (70°F)	27°C (80°F)	32°C (90°F)	38°C (100°F)	43°C (110°F)
Air Temperature at Center Panel Outlet	-2 - 6°C (29-42°F)	2-10°C (37-49°F)	7-15°C (45-58°F)	11-19°C (52-65°F)	15-23°C (59-72°F)
Compressor Discharge Pressure	999-1206 kPa (145-175 PSI)	1033-1378 kPa (150-200 PSI	1240-1757 kPa (180-255 PSI)	1584-2136 kPa (230-310 PSI)	2067-2722 kPa (300-395 PSI)
Accumulator Out Pressure at Service Port	122-221 kPa (18-32 PSI)	137-235 kPa (20-34 PSI)	186-290 kpa (27-42 PSI)	220-324 kpa (32-47 PSI)	275-379 kPa (40-55 PSI)

A/C PERFORMANCE TEMPERATURES- (2.4L TURBO ENGINE ONLY)

Ambient Temperature	21°C (70°F)	27°C (80°F)	32°C (90°F)	38°C (100°F)	43°C (110°F)
Air Temperature at Center Panel Outlet	6 - 16°C (43-60°F)	11-21°C (52-69°F)	16-25°C (60-76°F)	17-28°C (63-83°F)	19-32°C (67-89°F)
Compressor Discharge Pressure	1139-1795 kPa (165-260 PSI)	1828-2070 kPa (265-300 PSI	1932-2070 kPa (280-300 PSI)	1932-2484 kPa (280-360 PSI)	2104-2898 kPa (305-420 PSI)
Accumulator Out Pressure at Service Port	195-319 kPa (28-46 PSI)	257-381 kPa (37-55 PSI)	312-443 kpa (45-64 PSI)	332-512 kpa (48-74 PSI)	360-581 kPa (52-84 PSI)

STANDARD PROCEDURE

STANDARD PROCEDURE - HANDLING TUBING AND FITTINGS

Kinks in the refrigerant tubing or sharp bends in the refrigerant hose lines will greatly reduce the capacity of the entire system. High pressures are produced in the system when it is operating. Extreme care must be exercised to make sure that all connections are pressure tight. Dirt and moisture can enter the system when it is opened for repair or replacement of lines or components. The refrigerant oil will absorb moisture readily out of the air. This moisture will convert into acids within a closed system.

CAUTION: The system must be completely empty before opening any fitting or connection in the refrigeration system. Open fittings with caution even after the system has been emptied. If any pressure is noticed as a fitting is loosened, retighten fitting and evacuate the system again.

A good rule for the flexible hose lines is to keep the radius of all bends at least 10 times the diameter of the hose. Sharper bends will reduce the flow of refrigerant. The flexible hose lines should be routed so they are at least 3 inches (80 mm) from the exhaust manifold. Inspect all flexible hose lines to make sure they are in good condition and properly routed.

The use of correct wrenches when making connections is very important. Improper wrenches or improper use of wrenches can damage the fittings. The internal parts of the A/C system will remain stable as long as moisture-free refrigerant and refrigerant oil is used. Abnormal amounts of dirt, moisture or air can upset the chemical stability. This may cause operational troubles or even serious damage if present in more than very small quantities.

When opening a refrigeration system, have everything you will need to repair the system ready. This will minimize the amount of time the system must be opened. Cap or plug all lines and fittings as soon as they are opened. This will help prevent the entrance of dirt and moisture. All new lines and components should be capped or sealed until they are ready to be used.

All tools, including the refrigerant dispensing manifold, the manifold gauge set, and test hoses should be kept clean and dry.

STANDARD PROCEDURE - SYSTEM CHARGE LEVEL TEST

The procedure below should be used to check and/or fill the refrigerant charge in the air conditioning system.

HEATING & AIR COND. - LHD (Continued)

WARNING: AVOID BREATHING A/C REFRIGERANT AND LUBRICANT VAPOR OR MIST. EXPOSURE MAY IRRITATE EYES, NOSE AND THROAT. USE ONLY APPROVED SERVICE EQUIPMENT MEETING SAE REQUIREMENTS TO DISCHARGE R-134a SYSTEM. IF ACCIDENTAL SYSTEM DISCHARGE OCCURS, VENTILATE WORK AREA BEFORE RESUMING SERVICE.
R-134a SERVICE EQUIPMENT OR VEHICLE A/C SYSTEM SHOULD NOT BE PRESSURE TESTED OR LEAK TESTED WITH COMPRESSED AIR. MIXTURE OF AIR and R-134a CAN BE COMBUSTIBLE AT ELEVATED PRESSURES. THESE MIXTURES ARE POTENTIALLY DANGEROUS AND MAY RESULT IN FIRE OR EXPLOSION CAUSING INJURY OR PROPERTY DAMAGE.

NOTE: Refer to the underhood HVAC specification tag for the proper charge level.

It is recommended to use the gauges or reclaim/recycle equipment.

(1) Use a manifold gauge and check the liquid line pressure.

(2) Attach a clamp-on thermocouple to the liquid line near the filter/drier.

(3) The vehicle must be in the following modes:

- Automatic transaxle in park or manual transaxle in neutral.
- Engine at idle
- A/C controls set to outside air
- Panel mode
- A/C ON full cool
- Blower motor ON high speed
- Vehicle windows closed

(4) Operate system for a couple of minutes to allow the system to stabilize.

(5) Observe filter/drier pressure and Liquid line temperature. Using the Charge Determination Chart (Fig. 1) determine where the system is currently operating. If the system is not in the proper range, reclaim all the refrigerant and recharge per A/C label.

STANDARD PROCEDURE - CHARGING A/C SYSTEM

PARTIAL CHARGE

This vehicle does not have a sight glass. It is not possible to determine the amount of (R-134a) charge in the system. Therefore it is necessary to completely evacuate and recover the system, and then recharge the system fully.

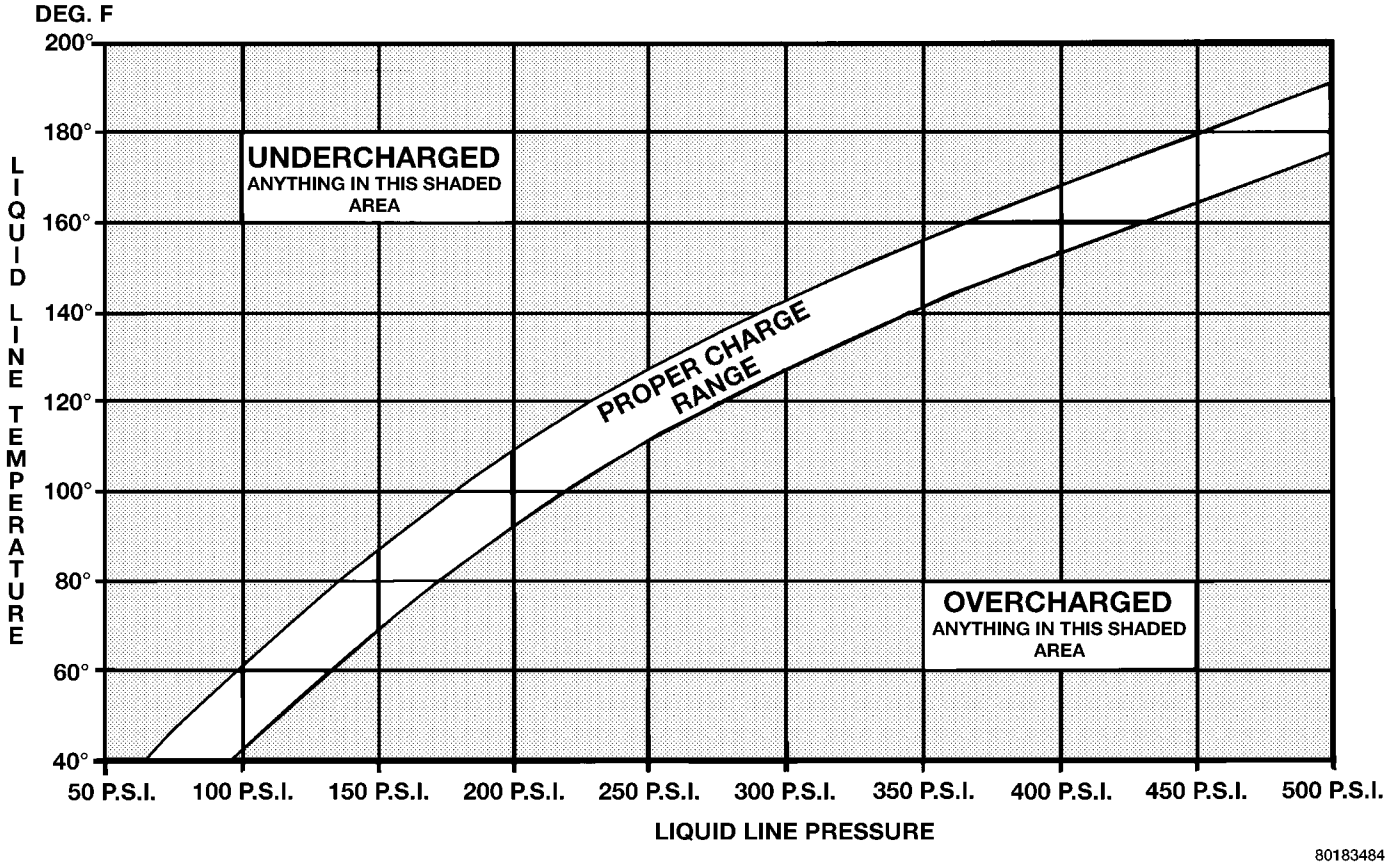

Fig. 1 Charge Determination Chart

HEATING & AIR COND. - LHD (Continued)

EVACUATION

Before adding refrigerant, all air must be evacuated from the system.

NOTE: Use the High Side service port on the discharge line at the compressor and the low side service port at the filter drier to attach your service equipment. DO NOT use the high side service port on the line next to the filter drier.

- Connect a manifold gauge set to the A/C service ports (Fig. 2), (Fig. 3) or (Fig. 4).
- Use a vacuum pump or charging station and evacuate system to 95 kPa (28 inches Hg) for 30 minutes.
- Go to Charging A/C System below.

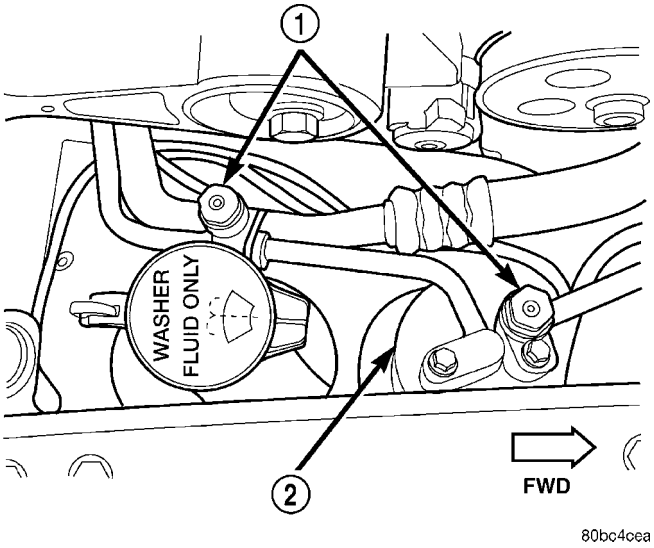

Fig. 2 A/C Service Ports

1 - A/C SERVICE PORTS
2 - FILTER/DRIER

CHARGING A/C SYSTEM

The procedure below should be used to fill the refrigerant charge in the air conditioning system. This A/C system does not have or use a sight glass to check or charge the system.

WARNING: REVIEW SAFETY PRECAUTIONS AND WARNINGS IN THIS GROUP BEFORE CHARGING THE REFRIGERANT SYSTEM.
AVOID BREATHING A/C REFRIGERANT AND LUBRICANT VAPOR OR MIST. EXPOSURE MAY IRRITATE EYES, NOSE AND THROAT. USE ONLY APPROVED SERVICE EQUIPMENT MEETING SAE REQUIREMENTS TO DISCHARGE R-134a SYSTEM. IF ACCIDENTAL SYSTEM DISCHARGE OCCURS, VENTILATE WORK AREA BEFORE RESUMING SERVICE.
R-134a SERVICE EQUIPMENT OR VEHICLE A/C SYSTEM SHOULD NOT BE PRESSURE TESTED OR LEAK TESTED WITH COMPRESSED AIR. MIXTURE OF AIR and R-134a CAN BE COMBUSTIBLE AT ELEVATED PRESSURES. THESE MIXTURES ARE POTENTIALLY DANGEROUS AND MAY RESULT IN FIRE OR EXPLOSION CAUSING INJURY OR PROPERTY DAMAGE.

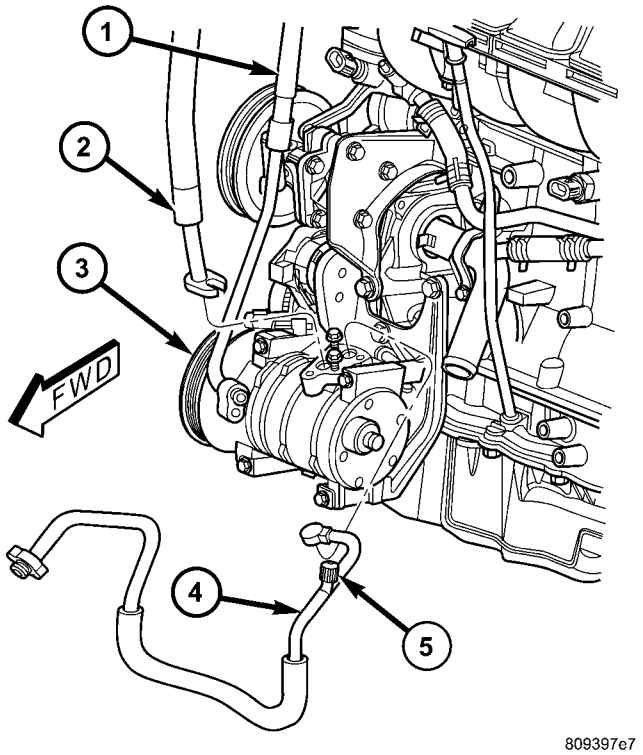

Fig. 3 A/C Refrigerant Lines - Compressor

1 - LIQUID LINE
2 - SUCTION LINE
3 - COMPRESSOR
4 - DISCHARGE LINE
5 - HIGH SIDE SERVICE PORT

CAUTION: Do not overcharge refrigerant system, as excessive compressor head pressure can cause noise and system failure.

After the system has been tested for leaks and evacuated, a refrigerant (R-134a) charge can be injected into the system.

NOTE: When connecting the service equipment coupling to the line fitting, verify that the valve of the coupling is fully closed. This will reduce the amount of effort required to make the connection.

(1) If using a separate vacuum pump close all valves before disconnecting pump. Connect manifold gauge set to the A/C service ports (Fig. 2) and (Fig. 3).

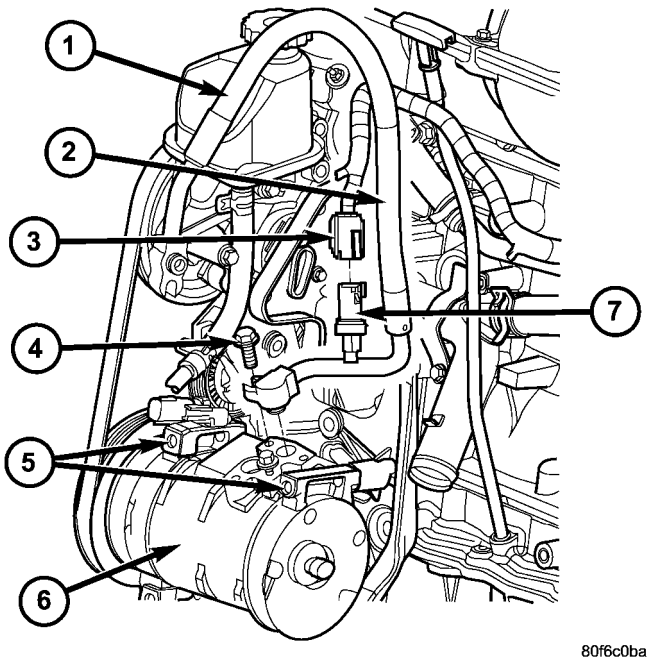

Fig. 4 A/C Compressor Removal/Installation 2.4L Turbo

1 - Power Steering Fluid Tank
2 - A/C Discharge Line
3 - High Pressure Cutoff Switch Electrical Connector
4 - Discharge Line Connection Bolt
5 - A/C Compressor Mounting Bolts (4 total)
6 - A/C Compressor
7 - High Pressure Cutoff Switch / High Side Charging Port

NOTE: Please refer to the underhood HVAC Specification sticker for the latest refrigerant fill levels for the vehicle being worked on.

NOTE: On vehicles equipped with the 2.4L Turbo removal of the High Side Pressure Switch may be required depending on your HVAC Charging Equipment. Check your service equipment manual to see if low side only servicing is permitted if not then removal of the switch is required.

(2) Measure refrigerant (refer to capacities). Refer to the instructions provided with the equipment being used.

(3) Verify engine is shut off. Open the suction and discharge valves. Open the charge valve to allow the refrigerant to flow into the system. When the transfer of refrigerant has stopped, close the suction and discharge valve.

(4) If all of the charge did not transfer from the dispensing device, put vehicle controls into the following mode:

- Automatic transaxle in park or manual transaxle in neutral
- Engine idling at 700 rpm
- A/C control set in 100 percent inside air (Recirculation)
- Panel mode
- Blower motor ON high speed
- Vehicle windows closed

If the A/C compressor does not engage, test the compressor clutch control circuit and correct any failure (Refer to 8 - ELECTRICAL/WIRING DIAGRAM INFORMATION - DIAGNOSIS AND TESTING).

(5) Open the suction valve to allow the remaining refrigerant to transfer to the system.

WARNING: TAKE CARE NOT TO OPEN THE DISCHARGE (HIGH-PRESSURE) VALVE AT THIS TIME

(6) Close all valves and test the A/C system performance.

(7) Disconnect the charging station or manifold gauge set. Install the service port caps.

STANDARD PROCEDURE - EVACUATING REFRIGERANT SYSTEM

NOTE: Special effort must be used to prevent moisture from entering the A/C system oil. Moisture in the oil is very difficult to remove and will cause a reliability problem with the compressor.

If a compressor designed to use R-134a refrigerant is left open to the atmosphere for an extended period of time. It is recommended that the refrigerant oil be drained and replaced with new oil or a new compressor be used. This will eliminate the possibility of contaminating the refrigerant system.

If the refrigerant system has been open to the atmosphere, it must be evacuated before the system can be filled. Moisture and air mixed with the refrigerant will raise the compressor head pressure above acceptable operating levels. This will reduce the performance of the air conditioner and damage the compressor. Moisture will boil at near room temperature when exposed to vacuum. To evacuate the refrigerant system:

NOTE: When connecting the service equipment coupling to the line fitting, verify that the valve of the coupling is fully closed. This will reduce the amount of effort required to make the connection.

(1) Connect a suitable charging station, refrigerant recovery machine or a manifold gauge set with vacuum pump and refrigerant recovery equipment.

(2) Open the suction and discharge valves and start the vacuum pump. The vacuum pump should run a minimum of 45 minutes prior to charge to eliminate all moisture in system. When the suction gauge reads -88 kPa (- 26 in. Hg) vacuum or greater

HEATING & AIR COND. - LHD (Continued)

for 30 minutes, close all valves and turn off vacuum pump. If the system fails to reach specified vacuum, the refrigerant system likely has a leak that must be corrected. If the refrigerant system maintains specified vacuum for at least 30 minutes, start the vacuum pump, open the suction and discharge valves. Then allow the system to evacuate an additional 10 minutes.

(3) Close all valves. Turn off and disconnect the vacuum pump.

(4) The refrigerant system is prepared to be charged with refrigerant.

STANDARD PROCEDURE - SYSTEM LEAK CHECKING

WARNING: R-134a SERVICE EQUIPMENT OR VEHICLE A/C SYSTEM SHOULD NOT BE PRESSURE TESTED OR LEAK TESTED WITH COMPRESSED AIR. MIXTURE OF AIR and R-134a CAN BE COMBUSTIBLE AT ELEVATED PRESSURES. THESE MIXTURES ARE POTENTIALLY DANGEROUS AND MAY RESULT IN FIRE OR EXPLOSION CAUSING INJURY OR PROPERTY DAMAGE.
AVOID BREATHING A/C REFRIGERANT AND LUBRICANT VAPOR OR MIST. EXPOSURE MAY IRRITATE EYES, NOSE AND THROAT. USE ONLY APPROVED SERVICE EQUIPMENT MEETING SAE REQUIREMENTS TO DISCHARGE R-134a SYSTEM. IF ACCIDENTAL SYSTEM DISCHARGE OCCURS, VENTILATE WORK AREA BEFORE RESUMING SERVICE.

NOTE: The refrigerant system does come from the factory with a yellow tracer dye already installed to aid in detection of leaks.

If the A/C system is not cooling properly, determine if the refrigerant system is fully charged with R-134a. This is accomplished by performing a system Charge Level-Check or Fill. If while performing this test A/C liquid line pressure is less than 345 kPa (50 psi) proceed to Empty Refrigerant System Leak Test. If liquid line pressure is greater than 345 kPa (50 psi) proceed to low refrigerant level leak test. If the refrigerant system is empty or low in refrigerant charge, a leak at any line fitting or component seal is likely. A review of the fittings, lines and components for oily residue is an indication of the leak location. To detect a leak in the refrigerant system, perform one of the following procedures as indicated by the symptoms.

EMPTY REFRIGERANT SYSTEM LEAK TEST

(1) Evacuate the refrigerant system to the lowest degree of vacuum possible (approx. 28 in Hg.). Determine if the system holds a vacuum for 15 minutes. If vacuum is held, a leak is probably not present. If system will not maintain vacuum level, proceed with this procedure.

(2) Prepare a .284 Kg. (10 oz.) refrigerant charge to be injected into the system.

(3) Connect and dispense .284 Kg. (10 oz.) of refrigerant into the evacuated refrigerant system.

(4) Proceed to Step 2 of Low Refrigerant Level Leak Test.

LOW REFRIGERANT LEVEL LEAK TEST

(1) Determine if there is any (R-134a) refrigerant in the system.

(2) Position the vehicle in a wind free work area. This will aid in detecting small leaks.

(3) Bring the refrigerant system up to operating temperature and pressure. This is done by allowing the engine to run for five minutes with the system set to the following:

- Transaxle in Park or neutral with parking brake set
- Engine Idling at 700 rpm
- A/C Controls Set in 100 percent outside air
- Blower switch in the high A/C position
- A/C in the ON position
- Open all windows

CAUTION: A leak detector designed for R-12 refrigerant (only) will not detect leaks in a R-134a refrigerant system.

(4) 2Shut off the vehicle and wait 2 to 7 minutes. Then use an Electronic Leak Detector that is designed to detect R-134a type refrigerant and search for leaks. Fittings, lines, or components that appear to be oily usually indicates a refrigerant leak. To inspect the evaporator core for leaks, insert the leak detector probe into the drain tube opening or a heat duct. A R-134a dye is available to aid in leak detection, use only DaimlerChrysler approved refrigerant dye.

If a thorough leak check has been completed without indication of a leak, proceed to System Charge Level.

STANDARD PROCEDURE - REFRIGERANT RECOVERY

WARNING: REVIEW THE WARNINGS AND CAUTIONS IN THE FRONT OF THIS GROUP BEFORE PERFORMING THE FOLLOWING OPERATION.

A R-134a refrigerant recovery/recycling/charging station that meets SAE Standard J2210 must be used to recover the refrigerant from an R-134a refrigerant system. See the operating instructions supplied by the equipement manufacturer for the proper care and use of this equipment.

HEATING & AIR COND. - LHD (Continued)

SPECIFICATIONS

A/C APPLICATION TABLE

Item	Description	Notes
Vehicle	PT- PT Crusier	
System	expansion valve	
Total Refrigerant Capacity	R134a	Refer to underhood HVAC specification tag.
Total Oil Capacity	ND-8 PAG oil	180 ml / 6.10 oz
Compressor	Nippondenso 10S17 - Auto Trans Nippondenso 10S15 - Man Trans	
Freeze-up Control	Low pressure clutch cycling switch	Input to PCM, accumulator mounted, cycles clutch off below 34° F, cycles back on above 45° F
Low psi Control	Low pressure clutch cycling switch	Accumulator mounted, opens < 22 ± 1 psi, resets > 39 ± 1 psi
High psi Control	High pressure switch	Compressor mounted switch, Opens > 470 psi, resets < 370 - 330 psi
Control head	Manual type	
Mode Door	Cable	
Blend Air Door	Cable	
Fresh/Recirc door	Vacuum actuator	
Blower Motor	Control head switched	Resistor block
Cooling Fan	Variable speed	PCM controlled ISO solid state fan relay
Clutch		
Control	Relay	PCM
Draw	2.5 amps @ 12V	± 0.5V @ 70° F
Gap	0.014″ - 0.026″	
DRB III®		
Reads	TPS, RPM, A/C switch test, fin sensor A/C & fan relays	
Actuators	Fan & clutch relays	

HEATING & AIR COND. - LHD (Continued)

TORQUE

TORQUE SPECIFICATIONS

DESCRIPTION	N·m	Ft. Lbs.	In. Lbs.
A/C Compressor Shaft Bolt	17.5 (± 2)	12.9 (± 1.5)	155 (± 2)
A/C Compressor Mounting Bolts	28.3	20.7	250
A/C Compressor Lines	12.2	9.0	108
A/C Condensor Lines	5	3.7	45
A/C Housing Retaining Fasteners	20	14.8	177
Expansion Valve bolt	11	8.1	97
A/C Line Retainer bolt	23	16.9	203

A/C COMPRESSOR CLUTCH RELAY

DESCRIPTION

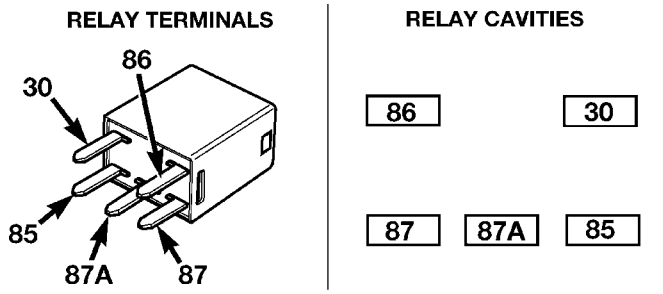

Fig. 5 A/C Compressor Clutch Relay

TERMINAL LEGEND	
NUMBER	IDENTIFICATION
30	COMMON FEED
85	COIL GROUND
86	COIL BATTERY
87	NORMALLY OPEN
87A	NORMALLY CLOSED

The A/C compressor clutch relay (Fig. 5) is a International Standards Organization (ISO) micro-relay. Relays conforming to the ISO specifications have common physical dimensions, current capacities, terminal patterns, and terminal functions. The ISO micro-relay terminal functions are the same as a conventional ISO relay. However, the ISO micro-relay terminal pattern (or footprint) is different, the current capacity is lower, and the physical dimensions are smaller than those of the conventional ISO relay. The A/C compressor clutch relay is located in the Power Distribution Center (PDC) in the engine compartment. See the fuse and relay layout label affixed to the inside surface of the PDC cover for A/C compressor clutch relay identification and location.

The black, molded plastic case is the most visible component of the A/C compressor clutch relay. Five male spade-type terminals extend from the bottom of the base to connect the relay to the vehicle electrical system, and the ISO designation for each terminal is molded into the base adjacent to each terminal. The ISO terminal designations are as follows:

- **30 (Common Feed)** - This terminal is connected to the movable contact point of the relay.
- **85 (Coil Ground)** - This terminal is connected to the ground feed side of the relay control coil.
- **86 (Coil Battery)** - This terminal is connected to the battery feed side of the relay control coil.
- **87 (Normally Open)** - This terminal is connected to the normally open fixed contact point of the relay.
- **87A (Normally Closed)** - This terminal is connected to the normally closed fixed contact point of the relay.

The factory-installed A/C compressor clutch relay cannot be adjusted or repaired. If the relay is damaged or faulty, it must be replaced.

A/C COMPRESSOR CLUTCH RELAY (Continued)

OPERATION

The A/C compressor clutch relay is an electromechanical switch that uses a low current input from the Powertrain Control Module (PCM) to control the high current output to the Compressor clutch electromagnetic coil. The movable common feed contact point is held against the fixed normally closed contact point by spring pressure. When the relay coil is energized, an electromagnetic field is produced by the coil windings. This electromagnetic field draws the movable relay contact point away from the fixed normally closed contact point, and holds it against the fixed normally open contact point. When the relay coil is de-energized, spring pressure returns the movable contact point back against the fixed normally closed contact point. The resistor or diode is connected in parallel with the relay coil in the relay, and helps to dissipate voltage spikes and electromagnetic interference that can be generated as the electromagnetic field of the relay coil collapses.

The A/C compressor clutch relay terminals are connected to the vehicle electrical system through a receptacle in the PDC. The inputs and outputs of the A/C compressor clutch relay include:

- The common feed terminal (30) receives a battery current input from a fuse in the PDC through a fused B(+) circuit at all times.
- The coil ground terminal (85) receives a ground input from the PCM through the A/C compressor clutch relay control circuit only when the PCM electronically pulls the control circuit to ground.
- The coil battery terminal (86) receives a battery current input from a fuse in the fuse block module through a fused ignition switch output (run-start) circuit only when the ignition switch is in the On or Start positions.
- The normally open terminal (87) provides a battery current output to the compressor clutch coil through the A/C compressor clutch relay output circuit only when the A/C compressor clutch relay coil is energized.
- The normally closed terminal (87A) is not connected to any circuit in this application, but provides a battery current output only when the A/C compressor clutch relay coil is de-energized.

Refer to the appropriate wiring information for complete air conditioning-heater wiring diagrams.

REMOVAL

(1) Disconnect and isolate the battery negative cable.

(2) Remove the cover from the Power Distribution Center (PDC) (Fig. 6).

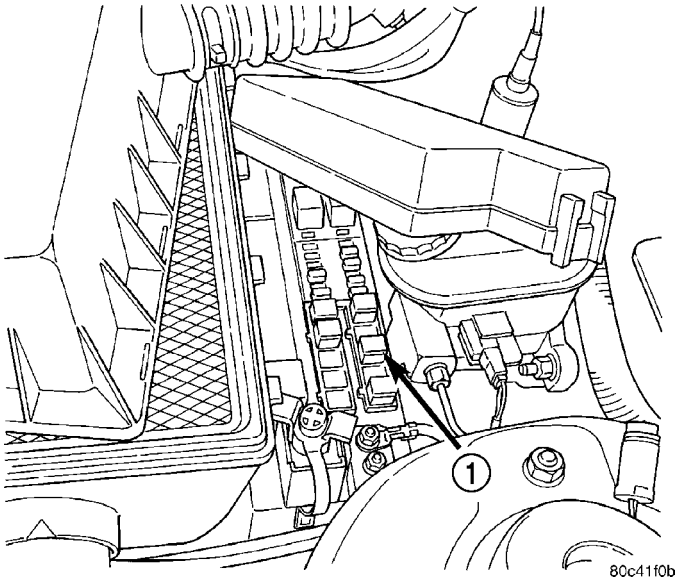

Fig. 6 Power Distribution Center

1 - PDC

(3) See the fuse and relay layout label affixed to the underside of the PDC cover for A/C compressor clutch relay identification and location.

(4) Remove the A/C compressor clutch relay from the PDC.

INSTALLATION

(1) See the fuse and relay layout label affixed to the underside of the PDC cover for the proper A/C compressor clutch relay location.

(2) Position the A/C compressor clutch relay in the proper receptacle in the PDC.

(3) Align the A/C compressor clutch relay terminals with the terminal cavities in the PDC receptacle.

(4) Push down firmly on the A/C compressor clutch relay until the terminals are fully seated in the terminal cavities in the PDC receptacle.

(5) Install the cover onto the PDC.

(6) Reconnect the battery negative cable.

A/C HEATER CONTROL

DESCRIPTION

Both the heater-only and heater-A/C systems use a combination of, electrical, cable, and vacuum controls. These controls provide the vehicle operator with a number of setting options to help control the climate and comfort within the vehicle. Refer to the owner's manual in the vehicle glove box for more information on the features, use, and suggested operation of these controls.

The heater-only or heater-A/C control panel is located to the right of the instrument cluster on the instrument panel. The control panel contains rotary-type knobs. There is a blower motor speed switch, mode control switch, temperature control, and airflow control.

The heater-only or heater-A/C control panel cannot be repaired. If faulty or damaged, the entire unit must be replaced. The control knobs and the illumination lamps are available for service replacement.

DIAGNOSIS AND TESTING - VACUUM CONTROL SYSTEM

Use an adjustable vacuum test set (Special Tool C-3707-B) and a suitable vacuum pump to test the heater-A/C vacuum control system. With a finger placed over the end of the vacuum test hose probe (Fig. 7), adjust the bleed valve on the test set gauge to obtain a vacuum of exactly 27 kPa (8 in. Hg.). Release and block the end of the probe several times to verify that the vacuum reading returns to the exact 27 kPa (8 in. Hg.) setting. Otherwise, a false reading will be obtained during testing.

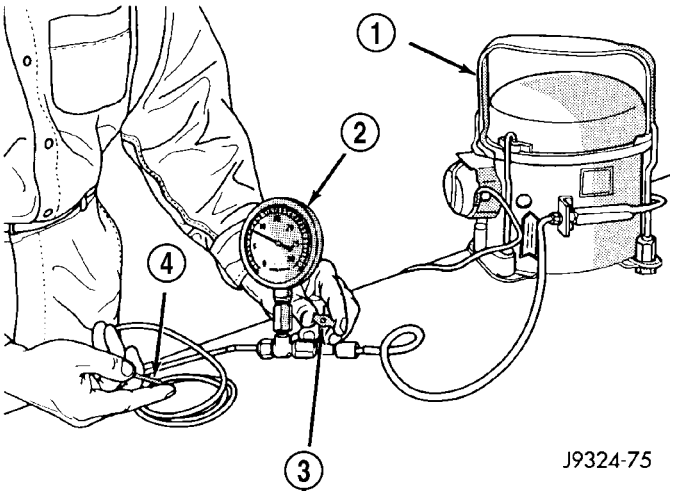

Fig. 7 Adjust Vacuum Test Bleed Valve

1 - VACUUM PUMP TOOL C-4289
2 - VACUUM TEST SET C-3707
3 - BLEED VALVE
4 - PROBE

HEATER-A/C VACUUM SYSTEM DIAGNOSIS

CONDITION	POSSIBLE CAUSES	CORRECTION
NO FORCED AIR IN HEAT POSITION	1. Vacuum line pinched or leaking. 2. Faulty heat defroster or mode door. 3. Faulty selector switch. 4. Vacuum check valve.	1. Locate and repair vacuum leak or pinched line. 2. Test actuators and door operation. Repair as necassary. 3. Test selector switch and replace if necessary. 4. Test check valve and replace if necessary.
NO FORCED AIR IN PANEL POSITION	1. Vacuum line pinched or leaking. 2. Faulty mode door. 3. Faulty selector switch. 4. Vacuum check valve.	1. Locate and repair vacuum leak or pinched line. 2. Test actuator and door operation. Repair as necessary. 3. Test selector switch and replace if necessary. 4. Test check valve and replace if necessary.
NO FORCED AIR IN DEFROST POSITION	1. Vacuum line pinched or leaking. 2. Faulty heat , defroster, or mode door. 3. Faulty selector switch. 4. Vacuum check valve.	1. Locate and repair vacuum leak or pinched line. 2. Test actuators and door operation. Repair as necessary. 3. Test selector switch and replace if necessary. 4. Test check valve and replace if necessary.

A/C HEATER CONTROL (Continued)

ONE-WAY CHECK VALVE

(1) Disconnect the heater-A/C vacuum supply (Black) tube in the engine compartment. This tube passes through an opening in the dash panel.

(2) Remove the one-way vacuum check valve. The valve is located on the (Black) vacuum supply hose at the brake power booster.

(3) Connect the test set vacuum supply hose to the heater side of the valve. When connected to this side of the check valve, no vacuum should pass and the test set gauge should return to the 27 kPa (8 in. Hg.) setting. If OK, go to step Step 4. If not OK, replace the faulty valve.

(4) Connect the test set vacuum supply hose to the engine vacuum side of the valve. When connected to this side of the check valve, vacuum should flow through the valve without restriction. If not OK, replace the faulty valve.

HEATER-A/C CONTROLS

The operation of the Circulation door can be viewed by removing the blower motor and looking up into the unit inlet. (Refer to 24 - HEATING & AIR CONDITIONING/DISTRIBUTION/BLOWER MOTOR - REMOVAL) for service procedures.

(1) Connect the test set vacuum probe to the heater-A/C vacuum supply (Black) hose in the engine compartment. Position the test set gauge so that it can be viewed from the passenger compartment.

(2) Start with the Mode control in the Panel position and the Circulation control in the Outside-air position.

(3) Move the Circulation control to the Recirculation position (the Circulation door should move into the Recirculation position). After a short pause move the Mode control to the Defrost position (the Circulation door should move to the Outside-air position). The test gauge should return to the calibrated setting of 27 kPa (8 in. Hg.) after each selection is made. If the gauge cannot achieve the calibrated setting, the vacuum circuit or a component has a leak.

(4) If the gauge achieves the calibrated setting but the door does not move, there is either a pinched vacuum line or a failed actuator.

LOCATING VACUUM LEAKS

(1) Connect the test vacuum probe to the vehicles (Black) supply hose. Position the vacuum test gauge so it can be viewed from the passenger compartment.

(2) Place the Mode in the Panel position and the Circulation control in the Recirculation position.

(3) Remove the center instrument panel bezel.

(4) Remove the center vent duct.

(5) Remove and block the Supply (Black) vacuum line at the control. The test gauge should return to the calibrated setting of 27 kPa (8 in. Hg). If not, there is a leak in the Supply line.

(6) If there is no leak in the Supply line, reconnect it to the Control and remove the Actuator Feed (Red) line from the Control. Block the vacuum connection on the Control from where the line was removed. The test gauge should return to the calibrated setting of 27 kPa (8 in. Hg.). If not, there is a leak in the Control.

(7) If there is no leak in the Supply line or the Control, reconnect the Actuator Feed (Red) line to the control. Remove and block the Actuator Feed (Red) line at the Actuator. The actuator vacuum port is accessible behind and above the Glove Box. The test gauge should return to the calibrated setting of 27 kPa (8 in. Hg.). If not there is a leak in the Actuator Feed line.

(8) If there is no leak in the Supply line, Control, or the Actuator Feed line, the leak must be in the Actuator itself. Connect the Vacuum hose from the Vacuum Test Gauge directly to the Actuator to verify the leak.

LOCATING PINCHED VACUUM LINES

The operation of the Circulation door can be viewed by removing the blower motor and looking up into the unit inlet. See Blower Motor Wheel and Assembly removal and installation in this section for service procedures(Refer to 24 - HEATING & AIR CONDITIONING/DISTRIBUTION/BLOWER MOTOR - REMOVAL) and (Refer to 24 - HEATING & AIR CONDITIONING/DISTRIBUTION/BLOWER MOTOR - INSTALLATION).

(1) Connect the test vacuum probe to the vehicles (Black) supply hose. Position the vacuum test gauge so it can be viewed from the passenger compartment.

(2) Place the Mode in the Panel position and the Circulation control in the Recirculation position.

(3) Remove the center instrument panel bezel.

(4) Remove the center vent duct.

(5) Remove the Supply (Black) vacuum line at the control. The test gauge should drop indicating free flow through the Supply line. If not, there is a blockage in the Supply line.

(6) If there is no blockage in the Supply line, reconnect it to the Control. Remove the Actuator Feed (Red) line from the Control. The test gauge should drop indicating free flow through the Supply line and Control. If not the vacuum switches on the Control are not functioning.

(7) If there is no blockage in the Supply line or the Control, reconnect the Actuator Feed (Red) line to the control. Remove the Actuator Feed (Red) line at the Actuator. The Actuator vacuum port is accessible behind and above the Glove Box. The test gauge should drop indicating free flow through the supply

A/C HEATER CONTROL (Continued)

line, Control, and the Actuator Feed line. If not, there is a blockage in the Actuator Feed line.

(8) If there is no blockage in the Supply line, Control, or the Actuator Feed line, the Actuator must have failed. Connect the Vacuum hose from the Vacuum Test Gauge directly to the Actuator to verify the Actuator has failed.

REMOVAL

(1) Remove the instrument panel center stack bezel(Refer to 23 - BODY/INSTRUMENT PANEL/INSTRUMENT PANEL CENTER BEZEL - REMOVAL) (Fig. 8).

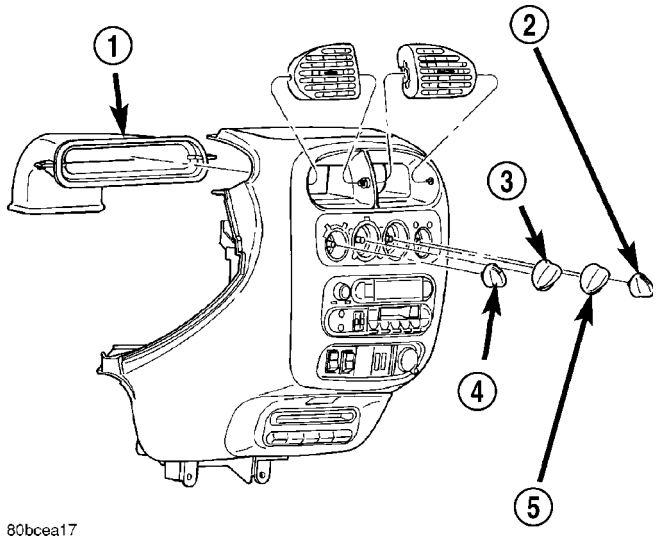

Fig. 8 Instrument Panel Center Bezel & Knobs

1 - INSTRUMENT PANEL CENTER AIR DUCT
2 - OUTSIDE AIR/RECIRC CONTROL KNOB
3 - MODE CONTROL KNOB
4 - BLOWER SPEED KNOB
5 - TEMPERATURE CONTROL KNOB

(2) Remove the center air duct (Fig. 9).

(3) Remove the heater-A/C control head and disconnect the cable (Fig. 10).

INSTALLATION

(1) Connect the control head cable and install the heater-A/C control head to the dash.

(2) Install the center air duct.

(3) Install the instrument panel center stack bezel-(Refer to 23 - BODY/INSTRUMENT PANEL/INSTRUMENT PANEL CENTER BEZEL - INSTALLATION).

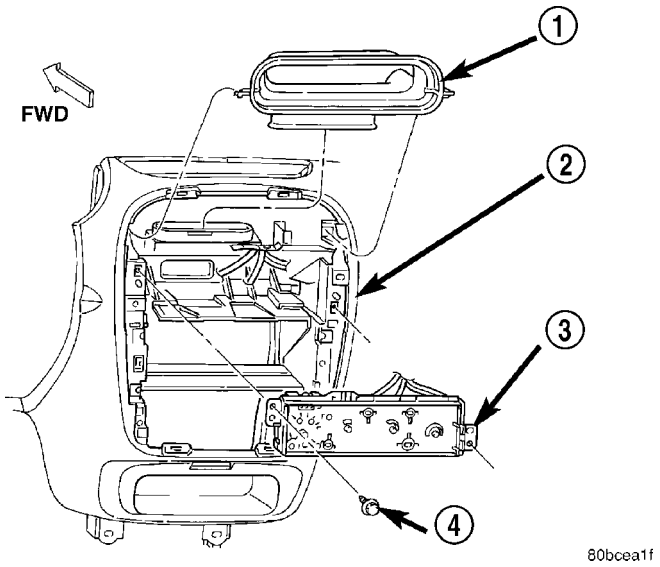

Fig. 9 HVAC Center Air Duct & Control Head

1 - CENTER AIR DUCT
2 - INSTRUMENT PANEL
3 - HVAC CONTROL HEAD
4 - ATTACHING SCREWS

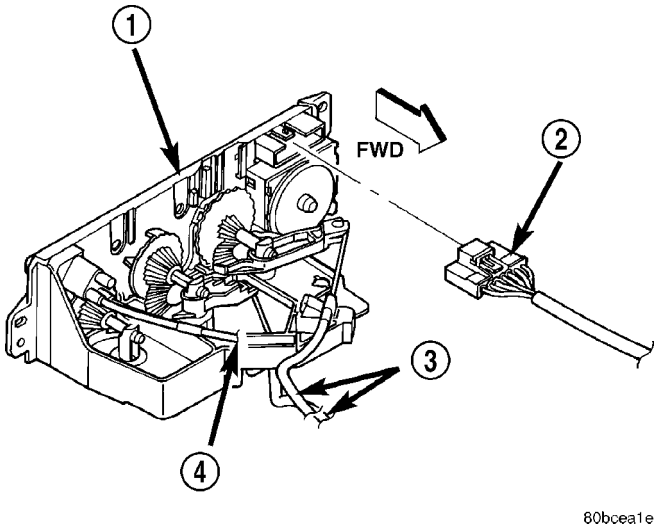

Fig. 10 HVAC Control Head Cables

1 - HVAC CONTROL HEAD
2 - ELECTRICAL CONNECTOR
3 - CONTROL CABLES
4 - VACUUM HARNESS

A/C COMPRESSOR CLUTCH COIL

REMOVAL

Compressor assembly must be removed from mounting(Refer to 24 - HEATING & AIR CONDITIONING/PLUMBING/A/C COMPRESSOR - REMOVAL). Although, refrigerant discharge is not necessary.

(1) Remove the compressor shaft bolt (Fig. 11). A band type oil filter removal tool can be placed around the clutch plate to aid in bolt removal.

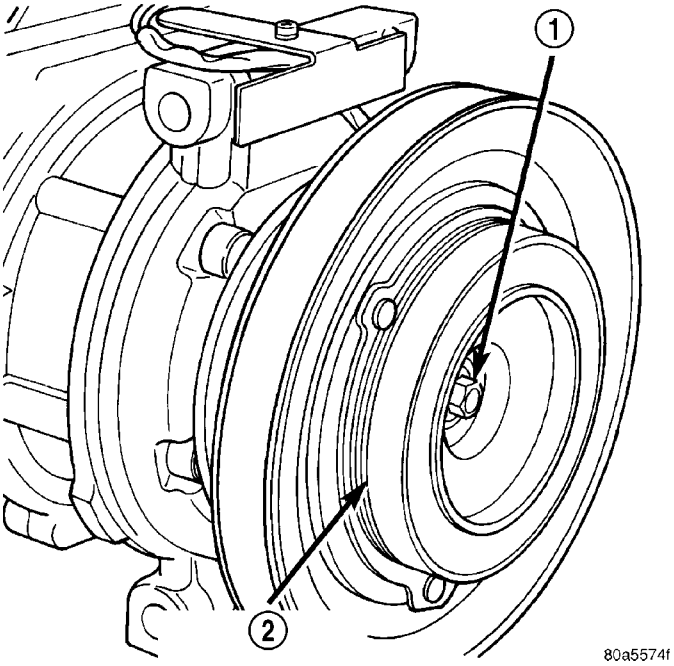

Fig. 11 Compressor Shaft Bolt and Clutch Plate

1 - COMPRESSOR SHAFT BOLT
2 - COMPRESSOR CLUTCH PLATE

(2) Tap the clutch plate with a plastic hammer and remove clutch plate and shim(s) (Fig. 12).

NOTE: Use care not to lose any of the shim(s).

CAUTION: Do not use screwdrivers between the clutch plate assembly and pulley to remove front plate as this may damage the front plate assembly.

(3) Remove pulley retaining snap ring with Snap Ring Pliers, and slide pulley assembly off of compressor (Fig. 13).

(4) Remove coil wire bracket/ground clip screw and wire harness.

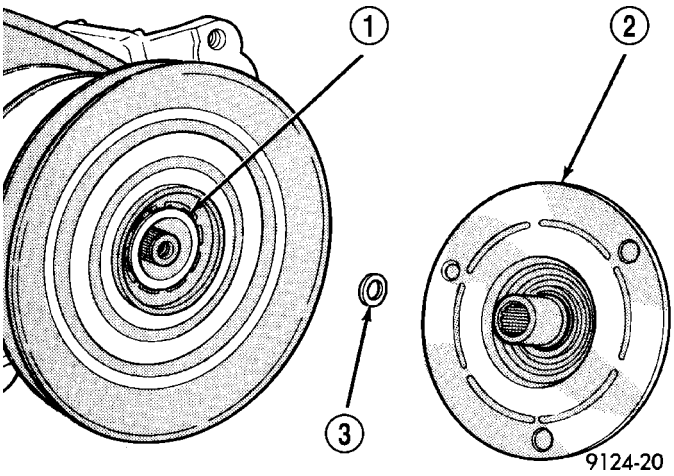

Fig. 12 Clutch Plate and Shim(s)

1 - COMPRESSOR SHAFT
2 - CLUTCH PLATE
3 - CLUTCH PLATE SHIM

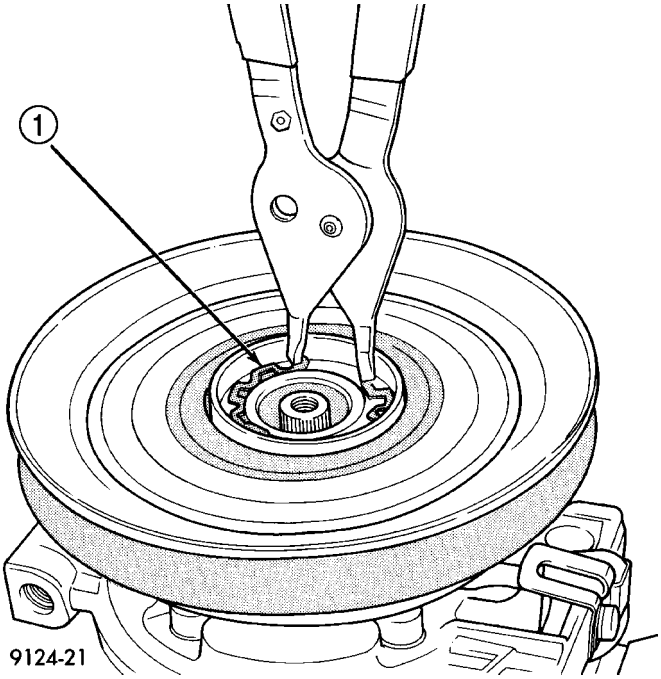

Fig. 13 Removing Pulley Snap Ring

1 - SNAP RING

A/C COMPRESSOR CLUTCH COIL (Continued)

(5) Remove snap ring retaining field coil onto compressor housing (Fig. 14). Slide field coil off of compressor housing.

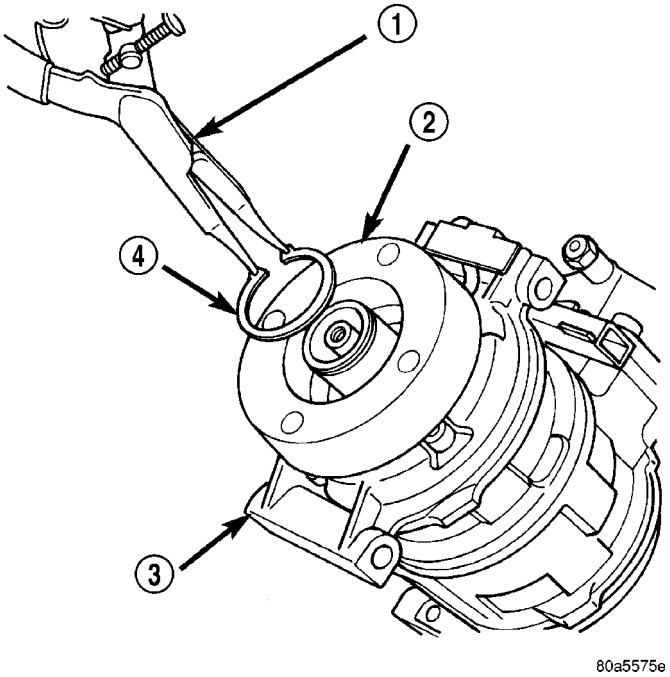

Fig. 14 Clutch Coil Snap Ring

1 - SNAP RING PLIERS
2 - CLUTCH COIL
3 - COMPRESSOR
4 - SNAP RING

(6) Examine frictional faces of the clutch pulley and front plate for wear. The pulley and front plate should be replaced if there is excessive wear or scoring. If the friction surfaces are oily, inspect the shaft nose area of the compressor for oil and remove the felt from the front cover. If the compressor felt is saturated with oil, the shaft seal is leaking and will have to be replaced.

(7) Check bearing for roughness or excessive leakage of grease. Replace bearing as required.

INSTALLATION

(1) Align pin in the back of the field coil with hole in compressor end housing, position the field coil into place. Make sure that lead wires are properly routed, and fasten the coil wire bracket/ground retaining screw.

NOTE: A new snap ring must be used. The bevel side of the snap ring must be outward.

(2) Install field coil retaining snap ring with Snap Ring Pliers. Press snap ring to make sure it is properly seated in the groove.

CAUTION: If snap ring is not fully seated it will vibrate out, resulting in a clutch failure and severe damage to the front face of the compressor.
Do not mar the pulley frictional surface.

(3) Install pulley assembly to compressor. If necessary, tap gently with a block of wood on the friction surface (Fig. 15).

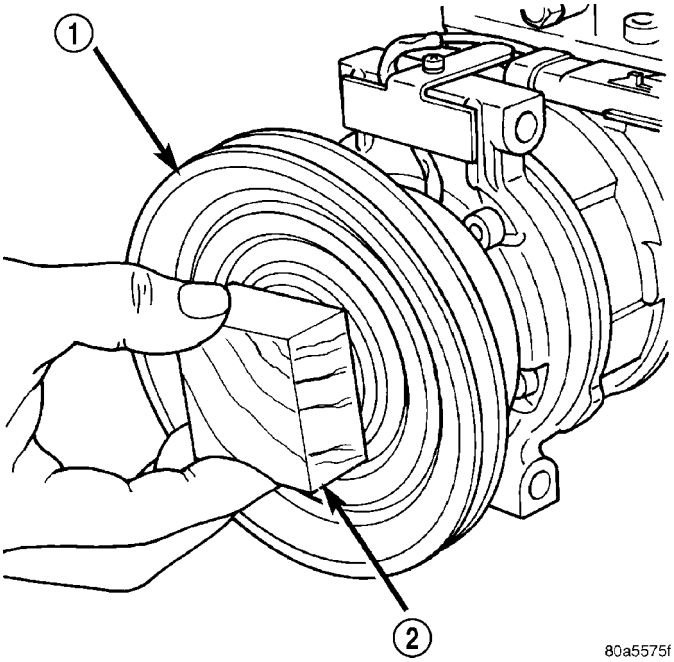

Fig. 15 Installing Pulley Assembly

1 - PULLEY ASSEMBLY
2 - WOOD BLOCK

(4) Install pulley assembly retaining snap ring (bevel side outward) with Snap Ring Pliers. Press the snap ring to make sure it is properly seated in the groove.

(5) If the original front plate assembly and pulley assembly are to be reused, the old shim(s) can be used. If not, place a trial stack of shims, 2.54 mm (0.10 in.) thick, on the shaft against the shoulder.

(6) Install front plate assembly onto shaft.

(7) If installing a new front plate and/or pulley assembly, the gap between front plate and pulley face must be checked. Use the following procedure:

(a) Attach a dial indicator to front plate so that movement of the plate can be measured.

(b) With the dial indicator zeroed on the front plate, energize the clutch and record the amount of movement.

(c) The readings should be 0.35 to 0.65 mm (0.014 to 0.026 in.). If proper reading is not obtained, add or subtract shims until desired reading is obtained.

(8) Install compressor shaft bolt. Tighten to 17.5 ± 2 N·m (155 ± 20 in. lbs.) torque.

A/C COMPRESSOR CLUTCH COIL (Continued)

NOTE: Shims may compress after tightening shaft nut. Check air gap in four or more places to verify if air gap is still correct. Spin pulley for final check.

(9) Install the compressor on the engine(Refer to 24 - HEATING & AIR CONDITIONING/PLUMBING/ A/C COMPRESSOR - INSTALLATION).

CLUTCH BREAK-IN

After new clutch installation, cycle the A/C clutch 20 times (5 seconds on and 5 seconds off). During this procedure, set the system to the A/C mode, engine rpm at 1500 - 2000, and high blower speed. This procedure (burnishing) will seat the opposing friction surfaces and provide a higher clutch torque capability.

A/C HIGH PRESSURE SWITCH

DESCRIPTION

The high pressure cut out switch is located on the rear of the compressor. It turns off the compressor if the system pressure exceeds 3240 kPa (470 psi). The high pressure cut out switch is a factory calibrated unit. The switch cannot be adjusted or repaired and if faulty or damaged, it must be replaced.

REMOVAL

WARNING: THE REFRIGERANT MUST BE REMOVED FROM THE SYSTEM BEFORE REMOVING THE HIGH PRESSURE CUT OUT SWITCH.

(1) Recover refrigerant from A/C system (Refer to 24 - HEATING & AIR CONDITIONING - STANDARD PROCEDURE).

(2) Disconnect and isolate the battery negative cable.

(3) Raise and support the vehicle.

(4) Disconnect the engine wire harness connector from the high pressure cut out switch on the compressor back cover (Fig. 16).

(5) Using snap ring pliers, remove the internal snap ring that secures the high pressure cut out switch to the switch port in the compressor back cover.

(6) Pull the high pressure cut out switch out of the compressor back cover.

(7) Install a plug in or tape over the opened switch port on the compressor back cover.

(8) Remove the rubber O-ring seal from the high pressure cut out switch and discard.

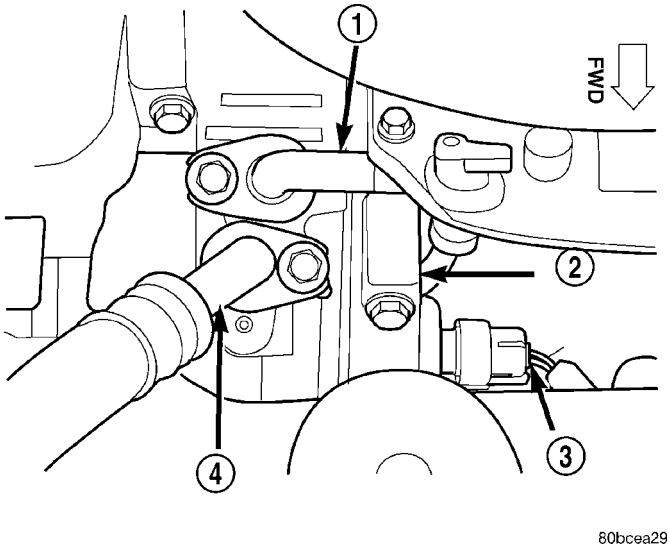

Fig. 16 High Pressure Cut Out Switch Location

1 - DISCHARGE LINE
2 - A/C COMPRESSOR
3 - HIGH PRESSURE CUT OUT SWITCH
4 - SUCTION LINE

INSTALLATION

WARNING: THE REFRIGERANT MUST BE REMOVED FROM THE SYSTEM BEFORE REMOVING THE HIGH PRESSURE CUT OUT SWITCH.

(1) Clean any foreign matter from the switch mounting bore

(2) Install the high pressure cutout switch with a new O-ring. Use only the specified O-rings as they are made of a special material for the R-134a system. Use only refrigerant oil of the type recommended for the compressor in the vehicle.

(3) Remove the tape or plug from the switch port on the compressor back cover.

(4) Insert the high pressure cut out switch into the switch port on the compressor back cover.

(5) Reconnect the engine wire harness connector to the high pressure cut out switch on the compressor back cover..

(6) Lower the vehicle.

(7) Reconnect the battery negative cable.

(8) Evacuate the refrigerant system (Refer to 24 - HEATING & AIR CONDITIONING - STANDARD PROCEDURE).

(9) Recharge the A/C system (Refer to 24 - HEATING & AIR CONDITIONING - STANDARD PROCEDURE).

A/C LOW PRESSURE SWITCH

DESCRIPTION

The A/C low pressure switch is a single pole, single throw, pressure actuated switch that is installed in a threaded port into the suction passage of the accumulator. The switch is located on the top of the accumulator in a fitting that contains a Schrader type valve, which allows the switch to be serviced without discharging the refrigerant system. The accumulator fitting is equipped with a O-ring to seal the switch plumbing connection.

The A/C low pressure switch is a factory calibrated unit. The switch cannot be adjusted or repaired and if faulty or damaged it must be replaced.

OPERATION

The A/C low pressure switch monitors the pressure of the refrigerant leaving the accumulator to the compressor. The switch is connected in series electrically with the heater-A/C control blower and mode switches and the high pressure cut out switch between ground and the Powertrain Control Module (PCM). The switch contact open or close the path the ground, signaling the PCM to turn the compressor clutch on and off. This regulates the refrigerant system pressure and controls evaporator temperature. Controlling the evaporator temperature prevents condensate water on the evaporator fins from freezing and obstructing air conditioning system air flow.

The A/C low pressure switch contacts are open when the suction pressure is approximatly 152 kPa (22 psi) or lower. The switch contacts will close when the suction pressure rises to approximately 234 to 262 kPa (34 to 38 psi) or above. Lower temperatures, below approximately -1° C (30° F), will also cause the switch contacts to open. This is due to the pressure/temperature relationship of the refrigerant in the system.

DIAGNOSIS AND TESTING - A/C LOW PRESSURE CLUTCH CYCLING SWITCH

Before performing diagnosis of the low pressure clutch cycling switch, be certain that the switch is properly installed on the accumulator fitting. If the switch is too loose it may not open the Schrader-type valve in the accumulator fitting, which will prevent the switch from correctly monitoring the refrigerant system pressure.

Also verify that the refrigerant system had the correct refrigerant charge(Refer to 24 - HEATING & AIR CONDITIONING - STANDARD PROCEDURE).

(1) With gear selector in park or neutral and park brake set, start engine and allow to idle.

(2) Raise hood and disconnect low pressure cut off switch connector boot.

(3) Using a suitable jumper wire, jump across the terminals inside wire connector boot.

(4) If the compressor clutch does not engage, the cycling clutch switch, wiring, relay, or fuse can be defective (Refer to 8 - ELECTRICAL/WIRING DIAGRAM INFORMATION - DIAGNOSIS AND TESTING).

(5) If clutch engages, connect manifold gauge set. Read low pressure gauge. At pressure above 97 kPa (14 psi) and above, low pressure out off switch will complete the clutch circuit. If the low pressure gauge reads below 140 kPa (20 psi), the system is low on refrigerant charge or empty due to a leak (Refer to 24 - HEATING & AIR CONDITIONING - STANDARD PROCEDURE).

(6) Install connector boot on switch and repeat Step 3. If the clutch does not engage, replace the low pressure clutch cycling switch.

REMOVAL

NOTE: Note: It is not necessary to discharge the refrigerant system to replace the low pressure cycling switch.

(1) Disconnect and isolate the battery negative cable.

(2) Disconnect the connector for the A/C low pressure switch from the top connector on the accumulator.

(3) Unscrew the A/C low pressure switch from the fitting on the top of the accumulator.

(4) Remove the O-ring seal from the accumulator and discard.

INSTALLATION

NOTE: Replace the O-ring seal before installing the low pressure clutch cycling switch

(1) Lubricate the new O-ring seal with clean refrigerant oil and install it on the accumulator fitting. Use only refrigerant oil of the type recommended for the compressor in the vehicle.

(2) Install and tighten the A/C low pressure switch onto the accumulator fitting. The switch should be hand-tightened onto the accumulator fitting.

(3) Reconnect the wiring harness connector to the A/C low pressure switch.

(4) Reconnect the battery negative cable.

A/C PRESSURE TRANSDUCER

DESCRIPTION

This vehicle is equipped with an a/c pressure transducer. This transducer is screwed onto a fitting on the liquid line between the condenser and the high side refrigerant system service port.

OPERATION

The main function of the a/c pressure transducer is to disengage the compressor clutch when the refrigerant system high pressures are too high. The PCM senses a voltage from the transducer and converts it to a pressure. Based on this pressure, the PCM will disengage the clutch at 460 psi and re-engage the clutch at 290 psi. The a/c heater control also uses the pressure value to operate the auto-recirculation function for improved a/c performance under extreme conditions.

DIAGNOSIS AND TESTING - A/C PRESSURE TRANSDUCER

Before performing diagnosis of the a/c pressure transducer switch, verify that the refrigerant system has the correct refrigerant charge. (Refer to 24 - HEATING & AIR CONDITIONING - DIAGNOSIS AND TESTING)

For circuit descriptions and diagrams, (Refer to Appropriate Wiring Information in Group 8W).

(1) Turn on engine and have a/c selected.

(2) Using the DRB-III monitor and record the pressure value as it is sent out from the PCM.

(3) Connect the high side manifold gauge set to the fitting on the liquid line high side refrigerant system service port.

(4) Compare the DRB-III pressure value to the manifold gauge set reading. The pressure reading from the DRB-III should be similar to the reading of the manifold gauge set value.

(5) If not, replace the a/c pressure transducer.

REMOVAL

(1) Disconnect and isolate the battery negative cable.

(2) Unplug the wire harness connector from the A/C pressure transducer switch, which is mounted to a fitting on the line between the compressor and the condenser inlet.

NOTE: On the 2.4L Turbo engine it may be necessary to move or relocate the cooling module, power steering pump or lines to gain access to the A/C pressure transducer.

(3) Unscrew the A/C pressure transducer switch from the discharge line fitting.

(4) Remove the A/C pressure transducer switch from the vehicle.

(5) Remove the O-ring seal from the discharge line fitting and discard.

INSTALLATION

(1) Lubricate a new O-ring seal with clean refrigerant oil and install it on the discharge line fitting. Use only the specified O-rings as they are made of a special material for the R-134a system. Use only refrigerant oil of the type recommended for the compressor in the vehicle.

(2) Install and tighten the A/C pressure transducer switch on the discharge line fitting.

(3) Plug the wire harness connector into the A/C pressure transducer switch.

NOTE: On the 2.4L Turbo Engine reposition the cooling module, power steering pump or lines if they were moved to gain access to the A/C pressure transducer.

(4) Connect the battery negative cable.

BLOWER MOTOR RESISTOR BLOCK

DESCRIPTION

The blower motor resistor is located in the cowl, at the base of the windshield (Fig. 17). There are two different resistor blocks depending on whether the vehicle is equipped with A/C or not. The blower motor resistors will get hot when in use. Do not touch resistor block if the blower motor has been running.

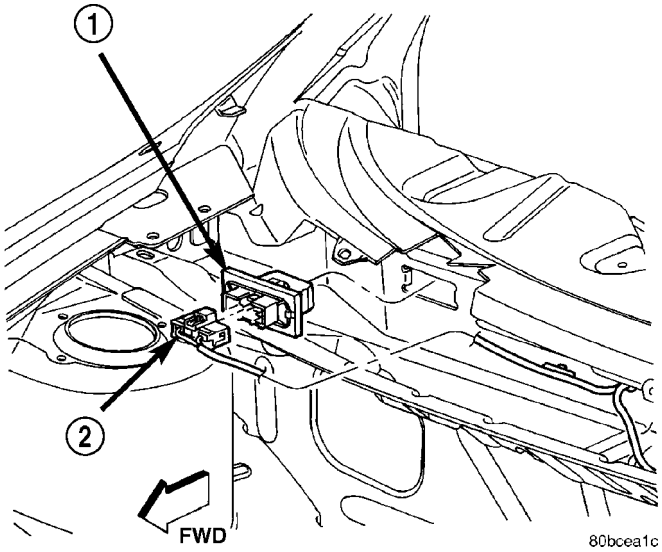

Fig. 17 Blower Motor Resistor Block

1 - RESISTOR BLOCK
2 - ELECTRICAL CONNECTOR

REMOVAL

CAUTION: Stay clear of the blower motor and resistor block (Hot). Do not operate the blower motor with the resistor block removed.

(1) Remove windshield wipers (Refer to 8 - ELECTRICAL/WIPERS/WASHERS/WIPER ARMS - REMOVAL).

(2) Remove cowl top screen (Refer to 23 - BODY/EXTERIOR/COWL GRILLE SCREEN - REMOVAL).

(3) Disconnect the resistor block wiring connector (Fig. 18).

(4) Remove/unsnap resistor block from vehicle.

(5) Remove the resistor block from the vehicle.

INSTALLATION

CAUTION: Stay clear of the blower motor and resistor block (Hot). Do not operate the blower motor with the resistor block removed.

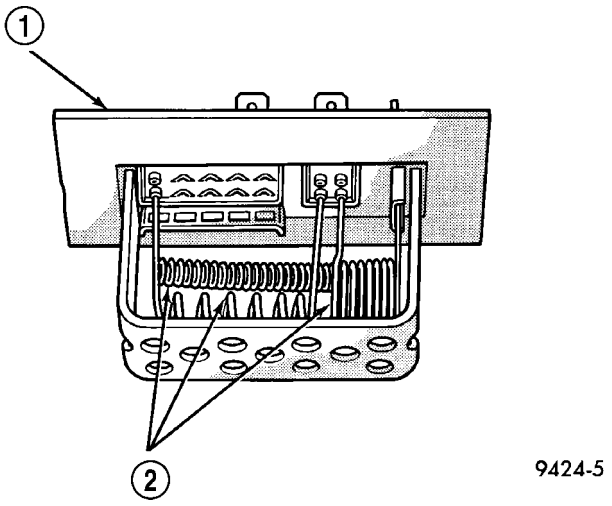

Fig. 18 Blower Motor Resistors

1 - RESISTOR BLOCK
2 - RESISTORS

(1) Snap the new Blower Motor Resistor Block into place (Fig. 19).

(2) Connect the resistor block wiring connector.

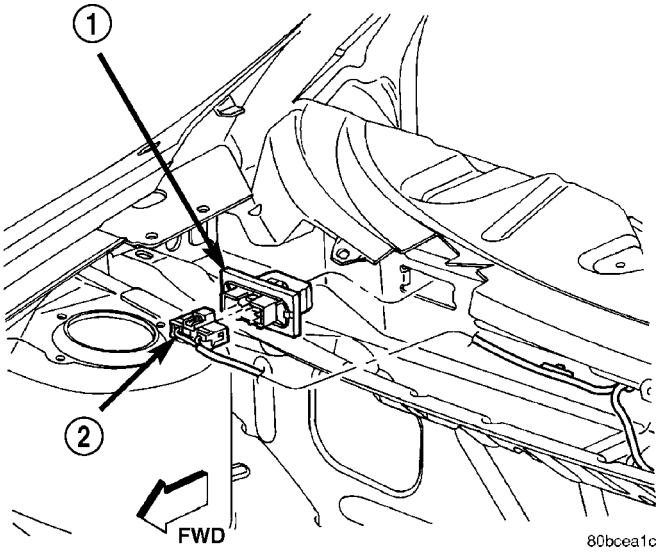

Fig. 19 Blower Motor Resistor Block

1 - RESISTOR BLOCK
2 - ELECTRICAL CONNECTOR

(3) Install the cowl top screen (Refer to 23 - BODY/EXTERIOR/COWL GRILLE SCREEN - INSTALLATION).

(4) Install the windshield wipers (Refer to 8 - ELECTRICAL/WIPERS/WASHERS/WIPER ARMS - INSTALLATION).

(5) Reconnect the battery negative cable.

MODE DOOR CABLE

REMOVAL

The Mode Control Cable can be removed and installed without having to remove the instrument panel from the vehicle.

(1) Disconnect and isolate the battery negative cable.

(2) Remove instrument panel center stack bezel (Fig. 20).

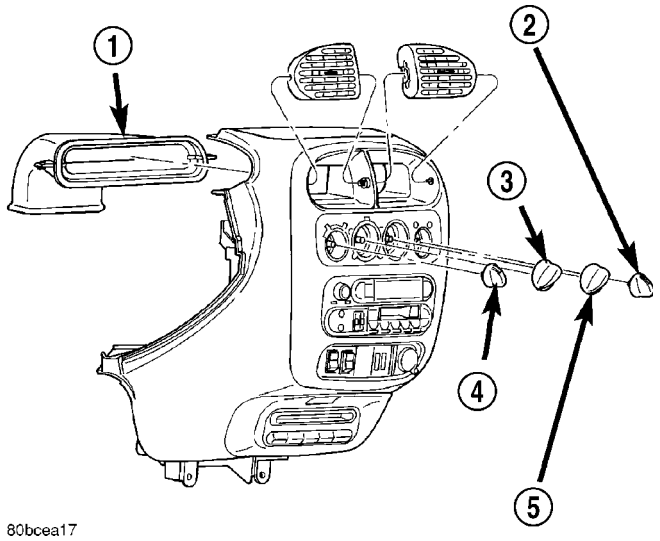

Fig. 20 Instrument Panel Center Bezel & Knobs

1 - INSTRUMENT PANEL CENTER AIR DUCT
2 - OUTSIDE AIR/RECIRC CONTROL KNOB
3 - MODE CONTROL KNOB
4 - BLOWER SPEED KNOB
5 - TEMPERATURE CONTROL KNOB

(3) Remove center air duct (Fig. 21).

(4) Remove heater-A/C control head and disconnect cable (Fig. 22).

(5) Disconnect the mode control cable end from the mode door lever.

(6) Remove the mode control cable through the instrument panel heater-A/C control opening.

INSTALLATION

The Mode Control Cable can be removed and installed without having to remove the instrument panel from the vehicle.

(1) Position the mode ocntrol cable through the instrument panel heater-A/C control opening.

(2) Reach through the instrument panel center air duct opening to access and reconnect the mode control cable end to the mode door lever.

(3) Install and tighten the screw that secures the mode control cable housing. Tighten the screw to 2.3 N·m (20 in. lbs.).

(4) Install the instrument panel center stack bezel.

(5) Reinstall the battery negative cable.

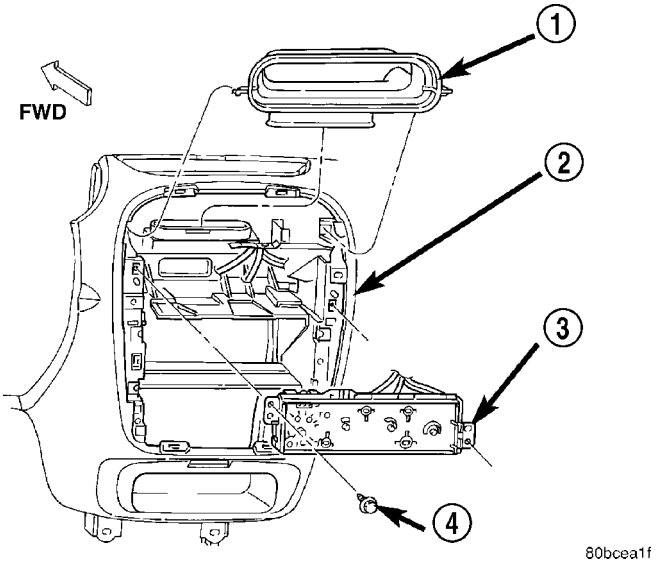

Fig. 21 HVAC Center Air Duct & Control Head

1 - CENTER AIR DUCT
2 - INSTRUMENT PANEL
3 - HVAC CONTROL HEAD
4 - ATTACHING SCREWS

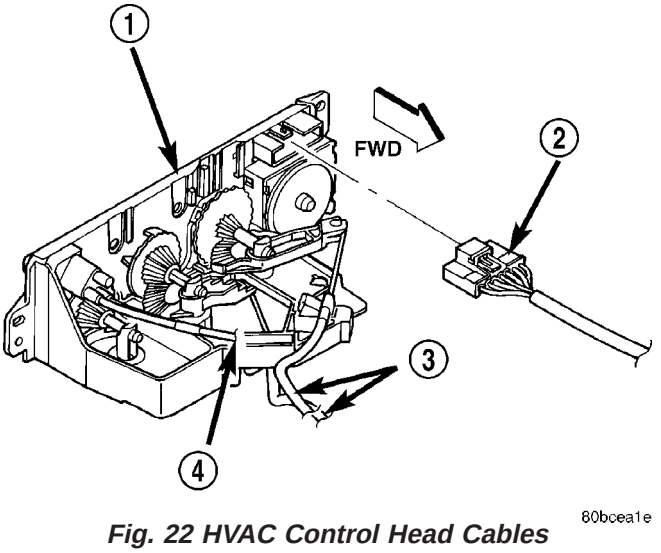

Fig. 22 HVAC Control Head Cables

1 - HVAC CONTROL HEAD
2 - ELECTRICAL CONNECTOR
3 - CONTROL CABLES
4 - VACUUM HARNESS

ADJUSTMENT

(1) Engage cable to actuator arm lever on mode door and attach to housing.

(2) Attach other end of cable to instrument panel control.

(3) Turn the mode knob completely counterclockwise.

(4) While holding the knob in the counterclockwise position, pull on the gray casing of the mode cable. This will take up any free play in the cable and index the mode door to the mode knob.

(5) Then snap the cable hold down clip into position.

RECIRCULATION DOOR ACTUATOR

DESCRIPTION

The vehicle uses vacuum to operate only the recirculation door (Fig. 23). All other controls are cable. When vacuum is supplied to the actuator, the door moves to the Recirculation position (Fig. 24). The actuator is spring loaded so the door moves to the Outside-air position when there is no vacuum supplied. The operation of the door can be viewed by removing the blower motor and looking up into the unit inlet.

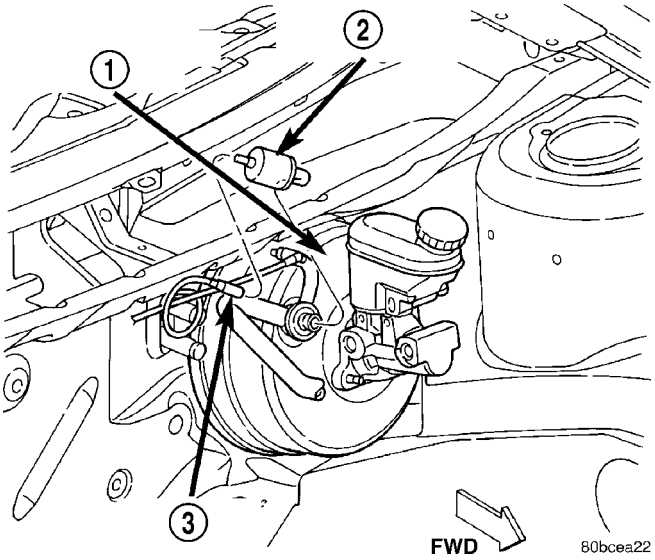

Fig. 23 A/C Vacuum Line

1 - BRAKE POWER BOOSTER
2 - A/C VACUUM CHECK VALVE
3 - VACUUM HARNESS

Normally, vacuum is supplied to the actuator by placing the Circulation control knob in the Recirculation position. The Mode and the circulation control are mechanically interlocked so the circulation control cannot be placed in the RECIRC position if the mode control is at or between the mix and defrost positions. Vacuum is supplied to the actuator only when circulation control is at the RECIRC position. If the circulation control is between the outside air position and RECIRC position the system will be in outside air. If the circulation control is in the RECIRC position and the mode control is moved from the floor to the defrost positions, the circulation control will move from the RECIRC position, to the outside air position beginning at the mix position. This is to prevent window fogging.

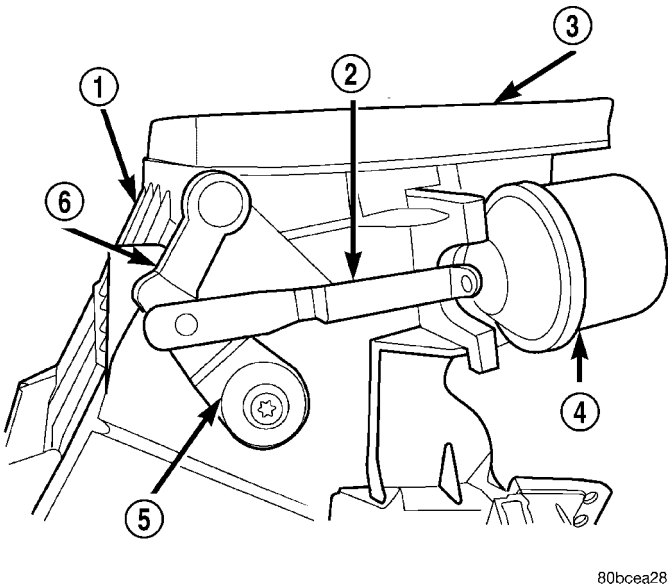

Fig. 24 Recirculation Air Door Vacuum Actuator

1 - OUTSIDE AIR/RECIRC DOOR HOUSING
2 - VACUUM ACTUATOR LINKAGE
3 - FOAM SEAL
4 - RECIRC DOOR VACUUM ACTUATOR
5 - DOOR LEVER
6 - DOOR LEVER

REMOVAL

The recirculation door actuator is a vacuum controlled actuator used to control movement of the recirculation door in air conditioner equipped vehicles.

The instrument panel must be removed from the vehicle to gain access to the recirculation door actuator.

(1) Remove the battery negative cable

(2) Remove instrument panel from vehicle(Refer to 23 - BODY/INSTRUMENT PANEL/INSTRUMENT PANEL ASSEMBLY - REMOVAL).

(3) Disconnect vacuum line harness connector from the nipple on the recirculation door actuator.

(4) Release the latch that secures the recirculation door actuator mount to the stanchion on the heater-A/C unit housing, and disengage the recirculation door actuator from the housing.

(5) Disconnect the recirculation door actuator linkage from the recirculation door lever. (Fig. 25).

(6) Remove the recirculation door actuator from the heater-A/C unit housing.

RECIRCULATION DOOR ACTUATOR (Continued)

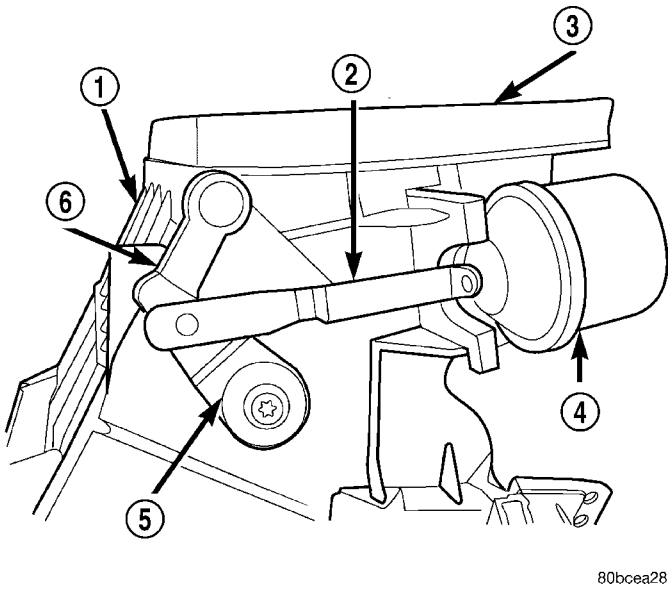

Fig. 25 Recirculation Door Actuator and Linkage

1 - OUTSIDE AIR/RECIRC DOOR HOUSING
2 - VACUUM ACTUATOR LINKAGE
3 - FOAM SEAL
4 - RECIRC DOOR VACUUM ACTUATOR
5 - DOOR LEVER
6 - DOOR LEVER

INSTALLATION

The recirculation door actuator is a vacuum controlled actuator used to control movement of the recirculation door in air conditioned equipped vehicles.

(1) Position the recirculation door actuator to the heater-A/C unit housing.

(2) Reconnect the recirculation door actuator linkage to the recirculation door lever.

(3) Align the recirculation door actuator mount to the stanchion on the heater-A/C unit housing, and press it onto the stanchion firmly and to engage the latch.

(4) Reconnect the vacuum harness connector to the nipple on the recirculation door actuator.

(5) Reinstall the Instrument Panel (Refer to 23 - BODY/INSTRUMENT PANEL/INSTRUMENT PANEL ASSEMBLY - INSTALLATION)

(6) Reconnect the battery negative cable.

TEMPERATURE CONTROL CABLES

REMOVAL

(1) Disconnect and isolate the battery negative cable.

(2) Remove instrument panel center stack bezel-(Refer to 23 - BODY/INSTRUMENT PANEL/INSTRUMENT PANEL CENTER BEZEL - REMOVAL).

(3) Remove the center air duct from the instrument panel.

(4) Remove heater-A/C control (Refer to 24 - HEATING & AIR CONDITIONING/CONTROLS/A/C HEATER CONTROL - REMOVAL).

(5) Reach through the instrument panel center air duct opening to access and remove the screw that secures the temperature control cable housing retainer to the top of the heater-A/C unit housing.

(6) Disconnect cable at control panel. Remove control from instrument panel.

(7) Disconnect the temperature control cable end from the blend-air door lever. (Fig. 26).

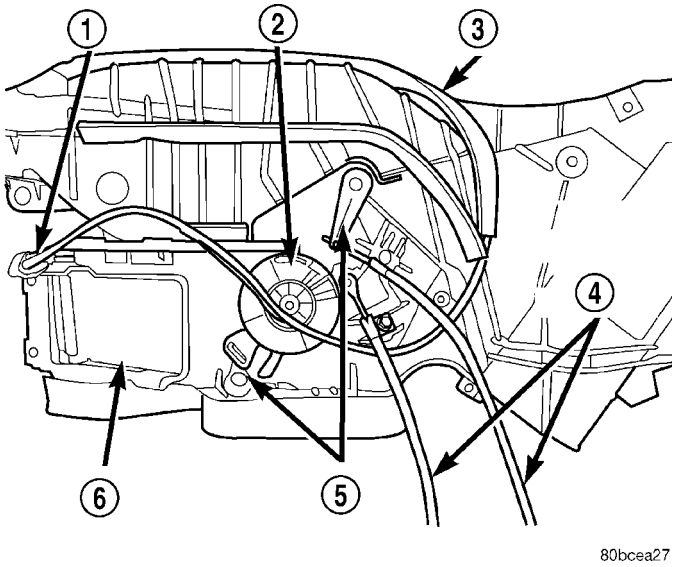

Fig. 26 HVAC Housing Cables

1 - VACUUM HARNESS
2 - DOOR CAM
3 - HVAC UPPER HOUSING
4 - HVAC CONTROL HEAD CABLES
5 - MODE DOOR LEVERS
6 - DEFROSTER DUCT OUTLET

(8) Remove the temperature control cable through the instrument panel heater-A/C control opening.

INSTALLATION

(1) Position the temperature control cable through the instrument panel heater-A/C control opening..

(2) Reach through the instrument panel center air duct opening to access and reconnect the temperature control cable end to the blend-air door lever.

(3) Install and tighten the screw that secures the temperature control cable housing retainer to the top of the heater-A/C unit housing. Tighten the screw to 2.3 N·m (20 in. lbs.).

(4) Reinstall the heater-A/C control into the instrument panel(Refer to 24 - HEATING & AIR CONDITIONING/CONTROLS/A/C HEATER CONTROL - INSTALLATION).

TEMPERATURE CONTROL CABLES (Continued)

(5) Install the instrument panel center stack bezel-(Refer to 23 - BODY/INSTRUMENT PANEL/INSTRUMENT PANEL CENTER BEZEL - INSTALLATION).

(6) Reconnect the battery negative cable.

ADJUSTMENTS

(1) Engage cable to actuator arm on temperature door and attach to housing.

(2) Attach other end of cable to instrument panel control.

(3) Turn the temperature knob completely counterclockwise.

(4) While holding the knob in the counterclockwise position, pull on the gray casing of the temperature cable. This will take up any free play in the cable and index the temperature door to the temperature knob.

(5) Then snap the cable hold down clip into position.

(6) Remount control.

DISTRIBUTION

DESCRIPTION

DESCRIPTION - SYSTEM AIRFLOW

The system pulls outside (ambient) air through the cowl opening at the base of the windshield. Then it goes into the plenum chamber above the heater-A/C housing. On air conditioned vehicles, the air passes through the evaporator. Air flow can be directed either through or around the heater core. This is done by adjusting the blend-air door with the TEMP control on the instrument panel. The air flow can then be directed from the panel, floor and defrost outlets in various combinations using the mode selector. There are 17 different mode selections possible. Air flow velocity can be adjusted with the blower speed selector switch on the instrument panel.

On A/C equipped vehicles the ambient air intake can be controlled by opening and closing the recirculating air door. When placed in RECIRC, air that is inside vehicle is removed continuously and recirculated through unit housing. Ambient air cannot be controlled on vehicles without A/C. The system uses outside air at all times.

The air conditioning compressor can be engaged by turning the fan switch counterclockwise from the off position. It can also be engaged by placing the mode control in the mix to defrost positions. This will remove heat and humidity from the air before it is directed through or around the heater core.

DESCRIPTION - HEATER AND AIR CONDITIONING

All vehicles are equipped with a common heater-A/C housing assembly (Fig. 27). The system combines air conditioning, heating, and ventilating capabilities in a single unit housing mounted under the instrument panel. On heater-only systems, the evaporator coil is omitted from the housing and replaced with an air restrictor plate.

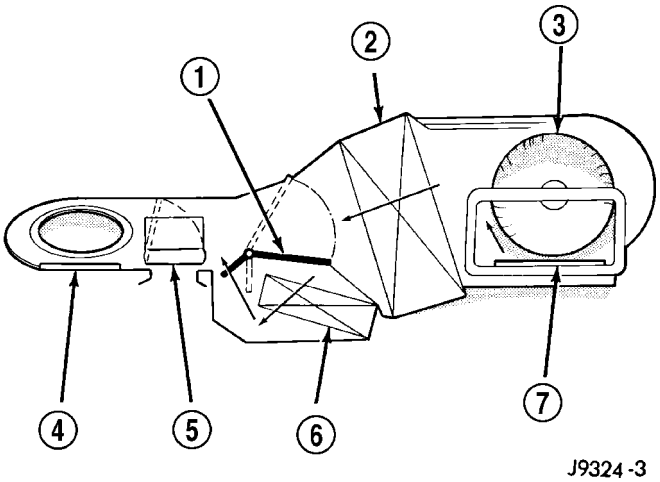

Fig. 27 Common Blend-Air HVAC (Heating, Ventilation, Air Conditioning) System - Typical

1 - TEMPERATURE BLEND/AIR DOOR
2 - EVAPORATOR CORE
3 - BLOWER
4 - PANEL DEFROST DOOR
5 - HEAT DEFROST DOOR
6 - HEATER CORE
7 - RECIRCULATING AIR DOOR

Outside air enters the vehicle through the cowl top opening at the base of the windshield, and passes through a plenum chamber to the heater-A/C system blower housing. Air flow velocity can then be adjusted with the blower motor speed selector switch on the heater-A/C control panel. The air intake openings must be kept free of snow, ice, leaves, and other obstructions for the heater-A/C system to receive a sufficient volume of outside air.

It is also important to keep the air intake openings clear of debris because leaf particles and other debris that are small enough to pass through the cowl plenum screen can accumulate within the heater-A/C housing. The closed, warm, damp and dark environment created within the heater-A/C housing is ideal for the growth of certain molds, mildews and other fungi. Any accumulation of decaying plant matter provides an additional food source for fungal spores, which enter the housing with the fresh air. Excess debris, as well as objectionable odors created by decaying plant matter and growing fungi can be dis-

DISTRIBUTION (Continued)

charged into the passenger compartment during heater-A/C system operation.

The heater and optional air conditioner are blend-air type systems. In a blend-air system, a blend-air door controls the amount of unconditioned air (or cooled air from the evaporator on models with air conditioning) that is allowed to flow through, or around, the heater core. A temperature control knob on the heater-A/C control panel determines the discharge air temperature by moving a cable, which operates the blend-air door. This allows an almost immediate manual control of the output air temperature of the system.

The mode control knob on the heater-only or heater-A/C control panel is used to direct the conditioned air to the selected system outlets. The mode control switch uses a cable to control the mode door, while the recirculation air door is operated by a vacuum actuator motor.

On air conditioned vehicles, the outside air intake can be shut off by selecting the recirculation mode (Recirc) with the mode control knob. This will operate a vacuum actuated recirculating air door that closes off the outside fresh air intake and recirculates the air that is already inside the vehicle.

The optional air conditioner for all models is designed for the use of non-CFC, R-134a refrigerant. The air conditioning system has an evaporator to cool and dehumidify the incoming air prior to blending it with the heated air. This air conditioning system uses an evaporator probe to maintain minimum evaporator temperature and prevent evaporator freezing, and cycles the compressor clutch.

AIR FILTER - EXPORT

DESCRIPTION

All Export model PT-44's are now equipped with an Air Conditioning air filter. The filter is mounted under the hood in the air intake. The filter should be checked and replaced at least once every 24,000 km (15,000 miles) and checked if system performance seems lower than expected.

REMOVAL

(1) Open the hood.

(2) Remove the passenger side cowl grille screen-(Refer to 23 - BODY/EXTERIOR/COWL GRILLE SCREEN - REMOVAL).

(3) Loosen the bolts fastening windshield washer reservoir to the body. Removal of the reservoir is not necessary just loosen it enough to allow access to the filter element.

(4) Remove the filter element by lifting the filter element up and out of it housing.

INSTALLATION

(1) Install filter element by inserting the element down directly into the element housing. The filter is held in place by friction between the filter element and the housing so no fasteners are used..

(2) Position windshield washer reservoir and tighten bolts to 8 N·m (70 in. lbs.).

(3) Install passenger side cowl grill screen(Refer to 23 - BODY/EXTERIOR/COWL GRILLE SCREEN - INSTALLATION).

(4) Close hood.

AIR FLOW DISTRIBUTION

DESCRIPTION

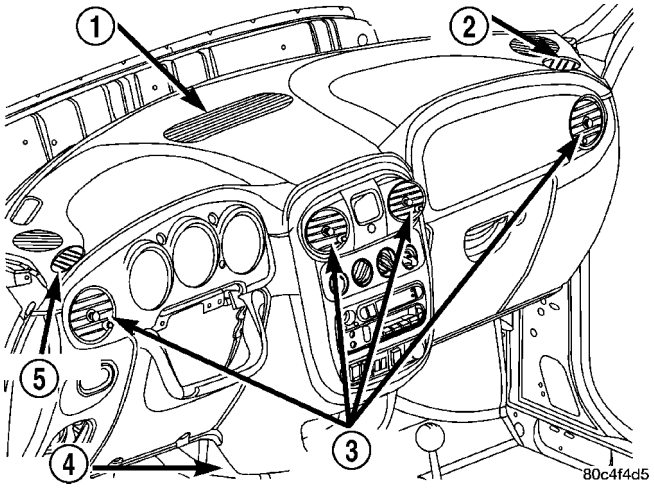

Fig. 28 HVAC Outlets

1 - DEFROST
2 - DE-MIST
3 - PANEL OUTLETS
4 - FLOOR
5 - DE-MIST

Based upon the system mode selected, conditioned air can exit the standard heater-only or optional heater-A/C unit housing through one or a combination of the three main housing outlets: defrost, panel or floor. The defrost outlet is located on the top of the housing, the panel outlet is located on the face of the housing and the floor outlet is located on the bottom of the housing. Once the conditioned air exits the unit housing, it is further directed through molded plastic ducts to the various outlets in the vehicle interior (Fig. 28). These outlets and their locations are as follows:

- **Defroster Outlet** - A single large defroster outlet is located in the center of the instrument panel top cover, near the base of the windshield.
- **Side Window Demister Outlets** - There are two side window demister outlets, one is located at

AIR FLOW DISTRIBUTION (Continued)

each outboard end of the instrument panel top cover, near the belt line at the A-pillars.

- **Panel Outlets** - There are four panel outlets in the instrument panel, one located near each outboard end of the instrument panel facing the rear of the vehicle and two located near the top of the instrument panel center bezel.
- **Front Floor Outlets** - There are four front floor outlets, two located above each side of the floor panel center tunnel near the dash panel.
- **Rear Floor Outlets** - There are two rear floor outlets, one located on each side of the floor panel center tunnel near the front of each rear seat foot well.

OPERATION

The defroster outlet receives airflow from the unit housing through the molded plastic defroster duct, which is snapped onto the unit housing defroster outlet and secured by two tabs to mounting slots in the dash panel. The airflow from the defroster outlet is directed by fixed vanes in the defroster outlet grille and cannot be adjusted. The defroster outlet grille is integral to the instrument panel top cover.

The side window demister outlets receive airflow from the unit housing through the air outlet distribution duct, two molded plastic demister hoses and, on the right side only, an intermediate duct. The air outlet distribution duct is secured to the instrument panel with screws and receives airflow through the panel outlet of the unit housing. The airflow from the side window demister outlets is directed by fixed vanes in the demister outlet grilles and cannot be adjusted. The side window demister outlet grilles are integral to the instrument panel top cover.

The panel outlets also receive airflow from the unit housing through the air outlet distribution duct. Molded plastic panel outlet ducts and, on the left side only, an intermediate elbow direct airflow from the distribution duct to the outboard panel outlets, while a center air outlet duct directs airflow from the distribution duct to the two center panel outlets. The airflow from each of the panel outlets is adjustable. A knob in the center of each panel outlet grille is used in a joystick fashion to adjust a center diffuser that changes the airflow direction, and a knob on the outer edge of each panel outlet grille opens or closes a shutter to turn airflow on or off through that outlet.

The front and rear floor outlets receive airflow from the unit housing through the floor distribution duct. The front floor outlets are integral to the molded plastic floor distribution duct, which is secured to the bottom of the unit housing. A molded plastic rear seat duct elbow is fitted to the bottom of the floor distribution duct and directs airflow through a molded plastic duct beneath the carpet on the right side of the floor panel center tunnel to the right rear floor outlet. The right floor duct also features a crossover fitting that joins the right floor duct to the left floor duct over the top of the floor panel center tunnel to direct airflow to the left rear floor outlet. None of the floor outlets can be adjusted.

AIR OUTLETS

DESCRIPTION

The demisters direct air from the unit housing through the outlets located on the top corners of the instrument panel. The demisters operate when the mode selector is anywhere between floor and defrost settings. Some air may be noticeable from the demister outlets when the mode selector is in the bi-level to floor positions.

REMOVAL - CENTER AIR OUTLET DUCT

(1) Remove the center bezel from the instrument panel.

(2) Remove the screws that secure the center air outlet duct to the instrument panel.

(3) Disengage the center air outlet duct from the air outlet distribution duct.

(4) Remove the center air outlet duct from the instrument panel.

INSTALLATION - CENTER AIR OUTLET DUCT

(1) Install the center air outlet duct to the instrument panel.

(2) Engage the center air outlet duct to the air outlet distribution duct.

(3) Install the screws that secure the center air outlet duct to the instrument panel. Tighten to 2.3 N·m (20 in. lbs.).

(4) Install the center bezel to the instrument panel.

BLOWER MOTOR

DESCRIPTION - BLOWER MOTOR WHEEL

The blower motor wheel is only serviced with the blower motor. The wheel and the motor are balanced as an assembly. If the blower motor wheel requires replacement, the blower motor must also be replaced. Refer to blower motor for replacement procedure.

OPERATION

The blower motor will only operate when the ignition switch is in the On position, and the blower control switch is in any position except Off. The blower motor circuit is protected by a fuse in the instrument panel fuse block. The blower motor speed is controlled by regulating the battery feed through the blower control switch and the blower motor resistor. The blower motor and wheel are used to control the velocity of air moving through the heater-only or heater-A/C unit housing. The blower motor controls the velocity of the air flowing through the heater-A/C housing by spinning the blower wheel within the housing at the selected speed.

DIAGNOSIS AND TESTING - BLOWER MOTOR

For circuit descriptions and diagrams, refer to the appropriate wiring information. The wiring information includes wiring, diagrams, proper wire and connector repair procedures, further details on wire harness routing and retention, as well as pin-out and location views for the various wire harness connectors, splices and grounds. The following chart will give you a basic check list on the blower motor circuit (Fig. 29).

REMOVAL

The blower motor is located on the bottom right side of the unit housing. The blower motor can be removed from the vehicle without having to remove the unit housing assembly.

BLOWER MOTOR (Continued)

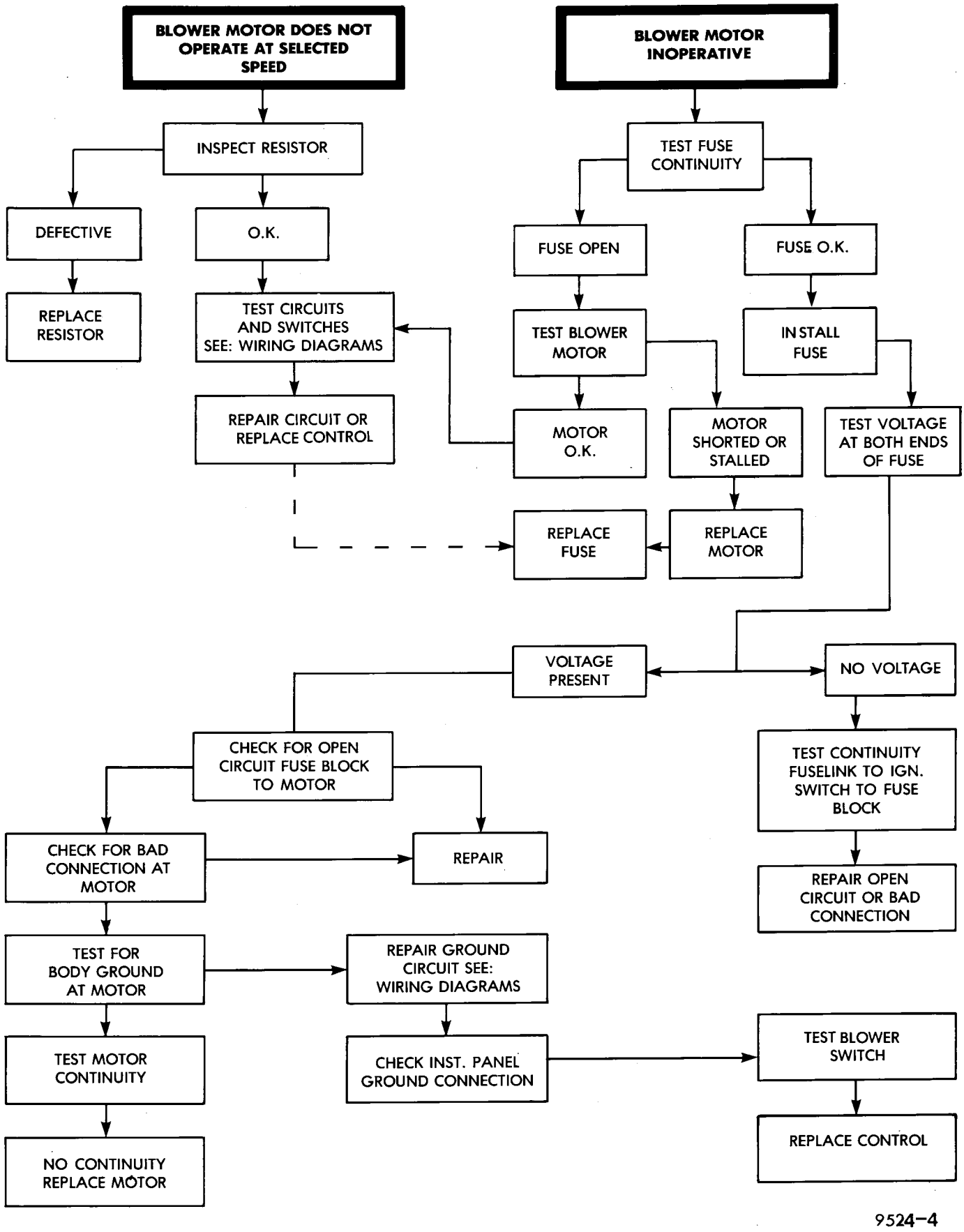

Fig. 29 Blower Motor Electrical Diagnosis

BLOWER MOTOR (Continued)

WITH AIR CONDITIONING

(1) Remove right side scuff plate.
(2) Pull back carpet.
(3) Disconnect blower motor wiring connector.
(4) Remove blower motor retaining screws, and lower blower motor assembly from unit housing (Fig. 30).

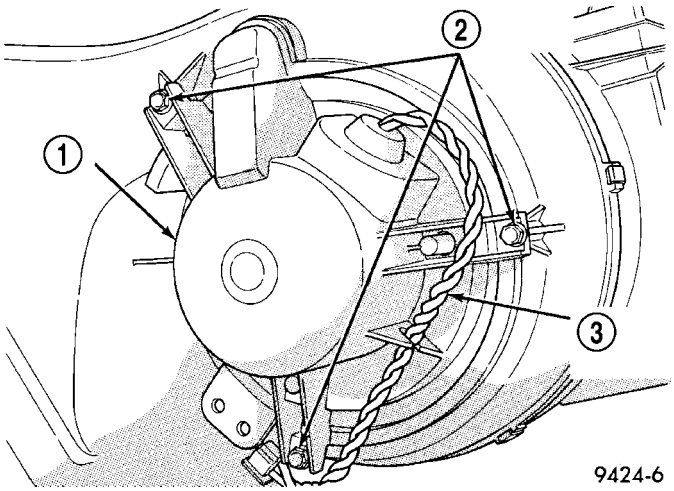

Fig. 30 Blower Motor Retaining Screws

1 - BLOWER MOTOR
2 - BLOWER MOTOR RETAINING SCREWS
3 - BLOWER MOTOR WIRING

WITHOUT AIR CONDITIONING

(1) Disconnect blower motor wiring connector.
(2) Grasp the blower motor while pulling down tab. Turn approximately 1/8 turn counterclockwise and remove blower motor assembly from unit housing (Fig. 31).

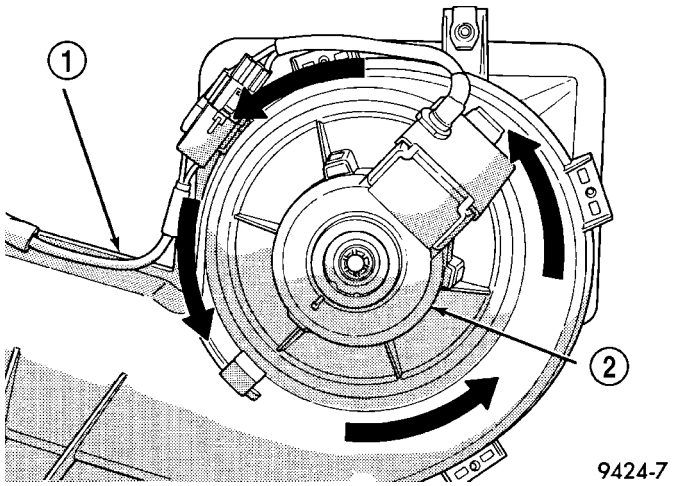

Fig. 31 Blower Motor Removal

1 - BLOWER MODULE
2 - BLOWER MOTOR

INSTALLATION

The blower motor is located on the bottom right side of the unit housing. The blower motor can be removed from the vehicle without having to remove the unit housing assembly.

WITH AIR CONDITIONING

(1) Position the blower motor into the unit housing.
(2) Install the blower motor retaining screws.
(3) Connect the wire harness to the blower motor.
(4) Reposition the right side carpet.
(5) Install the right side scuff plate.

WITHOUT AIR CONDITIONING

(1) Position the blower motor in the unit housing.
(2) Rotate the blower motor clockwise until tab snaps into the locked position, approximately 1/8 turn.

HVAC HOUSING

REMOVAL

The instrument panel must be removed in order to remove the heater-A/C Housing.(Refer to 23 - BODY/INSTRUMENT PANEL/INSTRUMENT PANEL ASSEMBLY - REMOVAL).

WARNING: THE R-134a REFRIGERANT SYSTEM MUST BE RECOVERED BEFORE SERVICING ANY PART OF THE REFRIGERANT SYSTEM.

(1) Using a refrigerant recovery machine, remove the refrigerant from the A/C system, if equipped(Refer to 24 - HEATING & AIR CONDITIONING - STANDARD PROCEDURE).
(2) Remove instrument panel from vehicle (Refer to 23 - BODY/INSTRUMENT PANEL/INSTRUMENT PANEL ASSEMBLY - REMOVAL).
(3) Drain cooling system.
(4) Remove heater hoses at the dash panel. Place plugs in the heater core outlets to prevent coolant spillage during unit housing removal.
(5) Unfasten coolant recovery container and set aside.
(6) Remove suction line at expansion valve (Refer to 24 - HEATING & AIR CONDITIONING/PLUMBING/SUCTION LINE - REMOVAL). Cap open refrigerant lines to prevent moisture and/or dirt from entering.
(7) Remove expansion valve from evaporator, and cap fittings (Refer to 24 - HEATING & AIR CONDITIONING/PLUMBING/A/C EVAPORATOR - REMOVAL).

HVAC HOUSING (Continued)

(8) Remove rubber drain tube extension from condensation drain tube.

(9) Disconnect the vacuum harness at the power brake booster (Fig. 32).

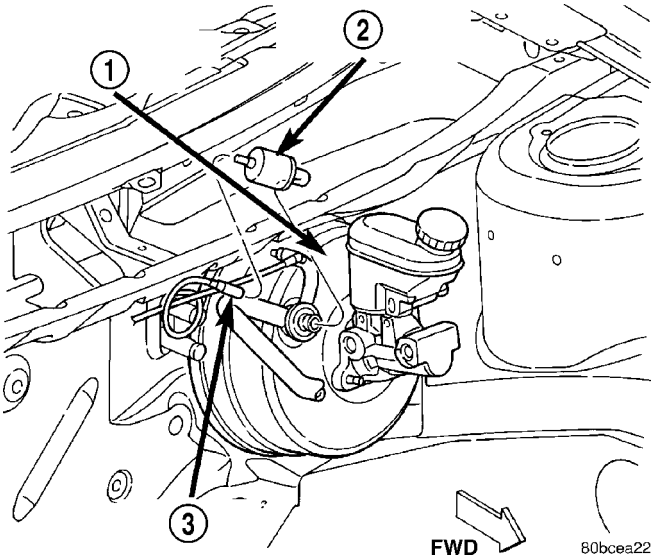

Fig. 32 A/C Vacuum Line

1 - BRAKE POWER BOOSTER
2 - A/C VACUUM CHECK VALVE
3 - VACUUM HARNESS

(10) Unsnap and remove the defroster duct (Fig. 33).

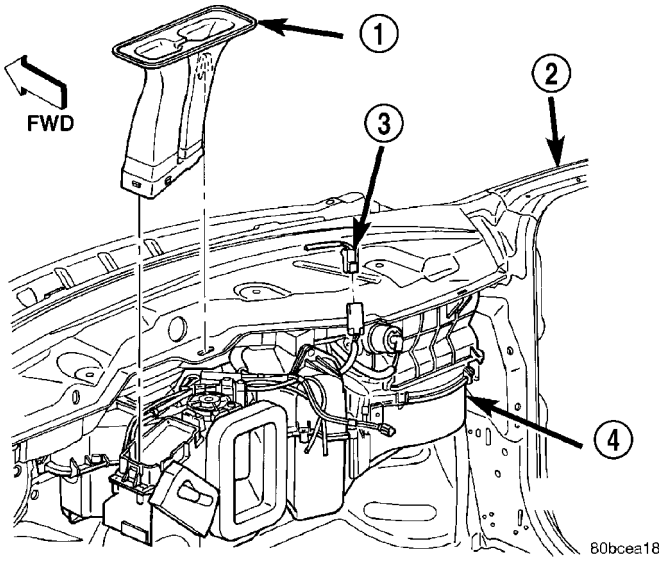

Fig. 33 HVAC Housing Defroster Duct

1 - DEFROSTER DUCT
2 - BODY
3 - ELECTRICAL CONNECTOR
4 - HVAC HOUSING

(11) Remove three retaining nuts located in the engine compartment, on the dash panel (Fig. 34).

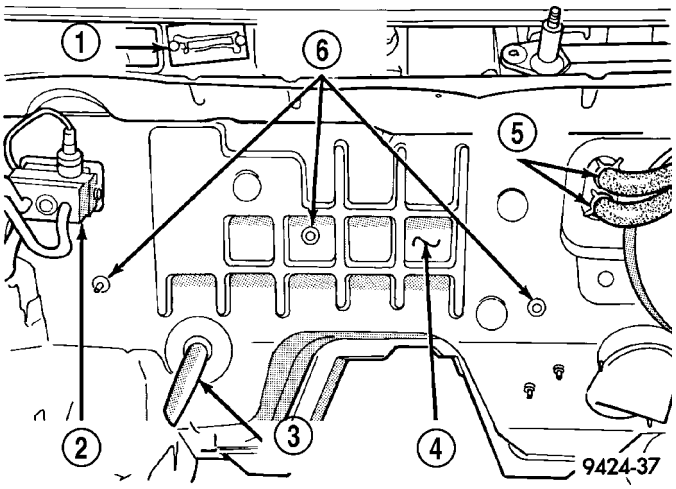

Fig. 34 Dash Panel Retaining Studs

1 - BLOWER RESISTOR
2 - EXPANSION VALVE
3 - DRAIN TUBE
4 - DASH PANEL
5 - HEATER HOSES
6 - RETAINING STUDS

(12) Remove the right side retaining screw (Fig. 35).

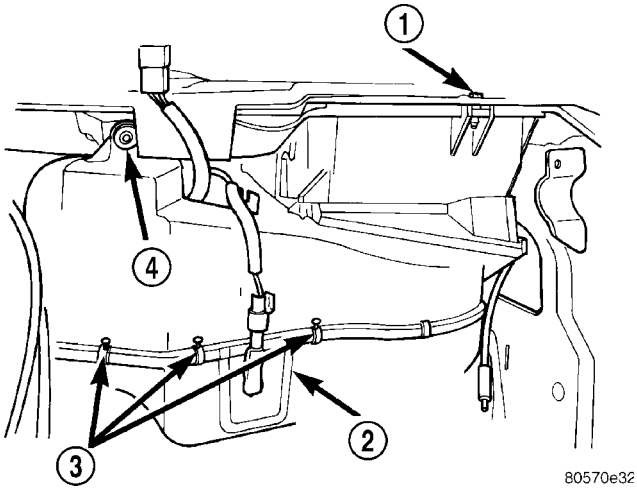

Fig. 35 Housing Screws

1 - RIGHT SIDE RETAINING SCREW
2 - EVAPORATOR PROBE GROMMET
3 - SCREW BOSSES
4 - DASH PANEL STUD AND NUT

(13) Remove remaining nut located on dash panel stud.

(14) Disconnect the wiring connectors.

(15) Remove assembly from the vehicle.

DISASSEMBLY

Use this procedure if any or all of the following items require service:

- Heater core
- Evaporator

HVAC HOUSING (Continued)

- HVAC housing

The HVAC housing must be removed from the vehicle before beginning with this procedure (Refer to 24 - HEATING & AIR CONDITIONING/DISTRIBUTION/HVAC HOUSING - REMOVAL).

(1) Separate the air distribution outlet foam seals at the case parting line (Fig. 36).

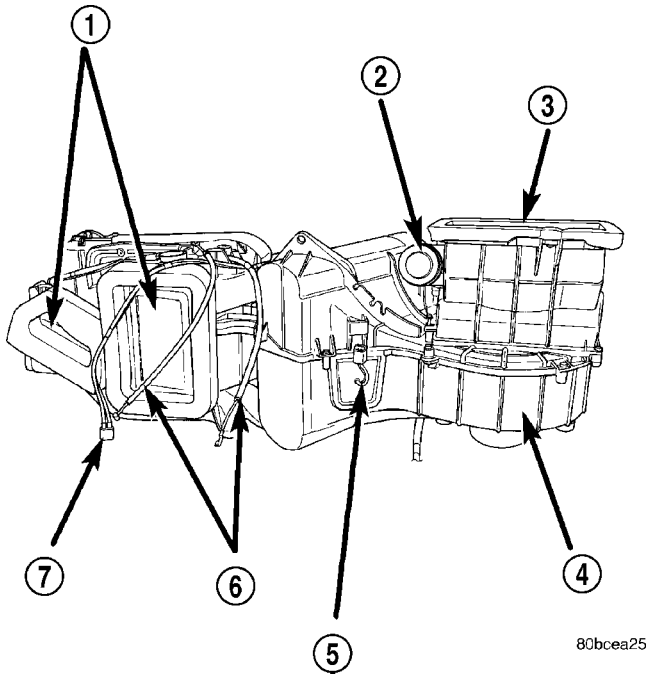

Fig. 36 HVAC HOUSING AIR DISTRIBUTION

1 - AIR DISTRIBUTION
2 - RECIRCULATION DOOR VACUUM ACTUATOR
3 - AIR INLET
4 - BLOWER MOTOR
5 - EVAPORATOR PROBE CONNECTOR
6 - CONTROL CABLES
7 - VACUUM HARNESS

(2) Remove the evaporator lines foam seal, and heater core tubes foam seal from the unit (Fig. 37).

(3) Remove the retaining clips and screws that hold the upper and lower housings together.

(4) Separate the two halves of the housing.

(5) Lift the heater core and evaporator out of the case.

ASSEMBLY

(1) Install the heater and evaporator cores into the case (Fig. 38).

(2) Place the two halves of the heater-a/c housing together.

(3) Install the retaining clips and screws that hold the upper and lower case housings together.

(4) Install the evaporator lines form seals and heater core tube seals to the case housing.

(5) Install the air distribution outlet foam seals at the case parting line.

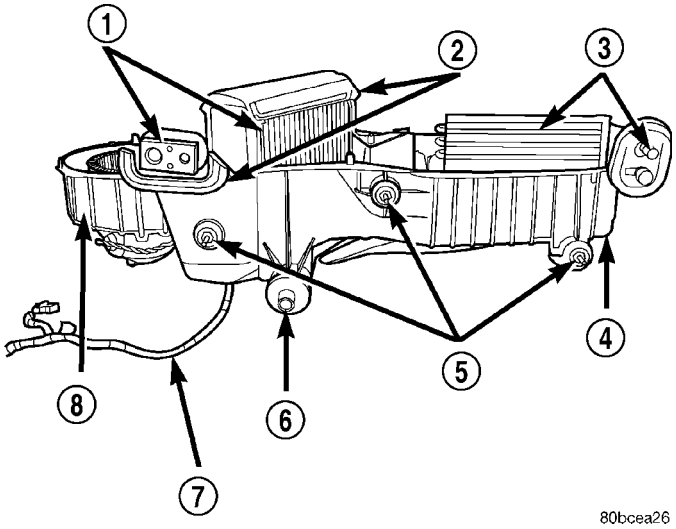

Fig. 37 Lower HVAC Housing

1 - EVAPORATOR AND CONNECTION
2 - FOAM SEALS
3 - HEATER CORE AND TUBES
4 - HVAC HOUSING LOWER CASE
5 - HOUSING MOUNTING STUDS
6 - HOUSING DRAIN
7 - WIRING
8 - BLOWER MOTOR AND WHEEL

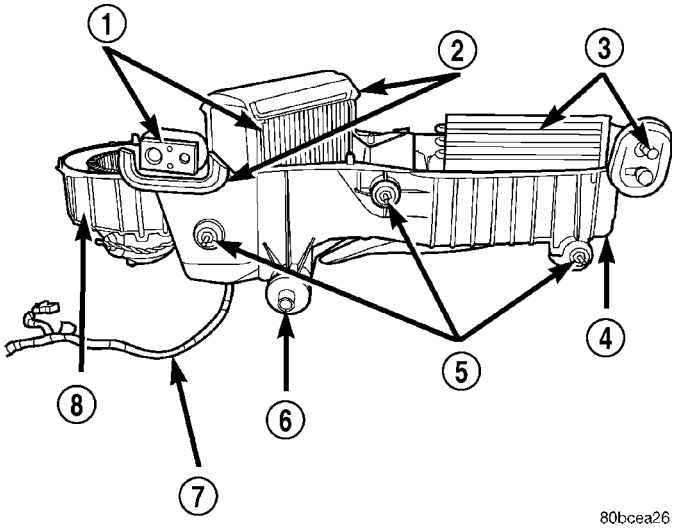

Fig. 38 Lower HVAC Housing

1 - EVAPORATOR AND CONNECTION
2 - FOAM SEALS
3 - HEATER CORE AND TUBES
4 - HVAC HOUSING LOWER CASE
5 - HOUSING MOUNTING STUDS
6 - HOUSING DRAIN
7 - WIRING
8 - BLOWER MOTOR AND WHEEL

INSTALLATION

WARNING: THE R-134a REFRIGERANT SYSTEM MUST BE RECOVERED BEFORE SERVICING ANY PART OF THE REFRIGERANT SYSTEM.

HVAC HOUSING (Continued)

(1) Position the housing in the vehicle.
(2) Connect the wire harness connectors.
(3) Install the nut on the dash panel stud.
(4) Install the three retaining nuts on the engine compartment studs.
(5) Snap the defrost duct in place.
(6) Connect the vacuum harness at the brake booster.
(7) Connect the rubber drain tube to the extension.
(8) Install the expansion valve to the evaporator (Refer to 24 - HEATING & AIR CONDITIONING/ PLUMBING/A/C EXPANSION VALVE - INSTALLATION).
(9) Remove the protective caps and connect the suction line to the expansion valve (Refer to 24 - HEATING & AIR CONDITIONING/PLUMBING/ SUCTION LINE - INSTALLATION).
(10) Position and install the coolant recovery container.
(11) Install the instrument panel (Refer to 23 - BODY/INSTRUMENT PANEL/INSTRUMENT PANEL ASSEMBLY - INSTALLATION)
(12) Refill the cooling system.
(13) Evacuate the refrigerant system (Refer to 24 - HEATING & AIR CONDITIONING - STANDARD PROCEDURE).
(14) Recharge the refrigerant system (Refer to 24 - HEATING & AIR CONDITIONING - STANDARD PROCEDURE).

A/C COMPRESSOR

DESCRIPTION

DESCRIPTION

The compressor (Fig. 39) used on this vehicle can be one of two models, depending upon the transmission in the vehicle. Vehicles with a manual transmission use the Nippondenso 10S15 compressor, while vehicles with an automatic transmission use the Nippondenso 10S17 unit. These compressors use an aluminum swash plate, teflon coated pistons and aluminum sleeveless cylinder walls. A high pressure cut out switch is located on the back cover of the compressor.

The compressor is secured to the lower front strut-to-engine bracket with four screws. The lower front strut-to-engine bracket is located on the lower, forward skirt of the engine block which is located in the right front corner of the engine compartment.

The compressor cannot be repaired. If faulty or damaged, the entire compressor unit must be replaced. The compressor clutch, pulley, clutch coil and the high pressure cut out switch are available for service replacement.

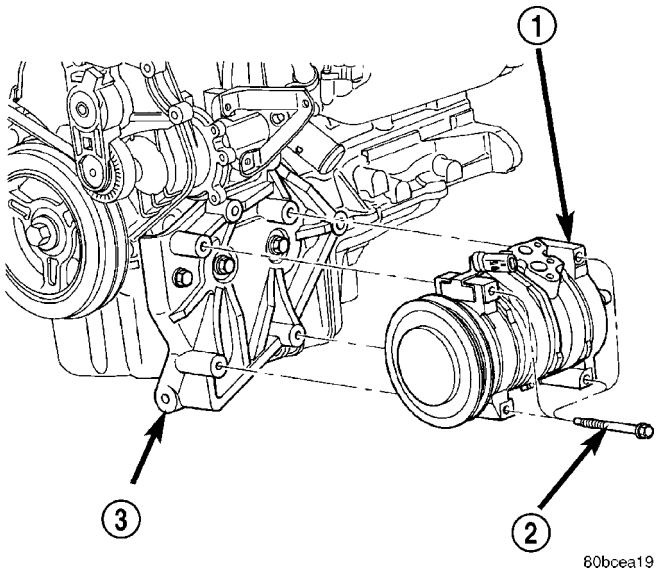

Fig. 39 Compressor

1 - A/C COMPRESSOR
2 - MOUNTING BOLTS
3 - LOWER FRONT STRUT-TO-ENGINE BRACKET

DESCRIPTION - COMPRESSOR FRONT SHAFT SEAL

The compressor front shaft seal is not serviceable. If a leak is detected at the shaft seal, the compressor must be replaced as a unit.

OPERATION

The compressor is driven by the engine through an electric clutch, drive pulley and belt arrangement. The compressor is lubricated by refrigerant oil that is circulated throughout the refrigerant system with the refrigerant.

The compressor draws in low-pressure refrigerant vapor from the evaporator through its suction port. It then compresses the refrigerant into a high-pressure, high-temperature refrigerant vapor. The compressor pumps high-pressure refrigerant vapor to the condenser through the compressor discharge port.

DIAGNOSIS AND TESTING - COMPRESSOR NOISE

Excessive noise while the A/C is being used, can be caused by loose mounts, loose clutch, or high operating pressure. Verify compressor drive belt condition, proper refrigerant charge and head pressure before compressor repair is performed.

If the A/C drive belt slips at initial start-up, it does not necessarily mean the compressor has failed.

With the close tolerances of a compressor it is possible to experience a temporary lockup. The longer the A/C system is inactive, the more likely the condition to occur.

A/C COMPRESSOR (Continued)

This condition is the result of normal refrigerant movement within the A/C system caused by temperature changes. The refrigerant movement may wash the oil out of the compressor.

REMOVAL

The compressor may be removed from the mounting bracket and repositioned without disconnecting the refrigerant lines or discharging the refrigerant system. Discharging is not necessary if servicing the compressor clutch or clutch coil, the engine, the cylinder head or the generator.

WARNING: REVIEW THE WARNINGS AND CAUTIONS IN THE FRONT OF THIS GROUP BEFORE PERFORMING THE FOLLOWING OPERATION.

(1) Recover the refrigerant from the refrigerant system(Refer to 24 - HEATING & AIR CONDITIONING - STANDARD PROCEDURE).

(2) Disconnect and isolate the battery negative cable.

(3) Raise and support the vehicle.

(4) Remove the serpentine drive belt(Refer to 7 - COOLING/ACCESSORY DRIVE/DRIVE BELTS - REMOVAL), (Refer to 7 - COOLING/ACCESSORY DRIVE/DRIVE BELTS - REMOVAL) or (Refer to 7 - COOLING/ACCESSORY DRIVE/DRIVE BELTS - REMOVAL).

(5) Disconnect the engine wire harness connectors from the compressor clutch coil connector and the high pressure cut out switch (Fig. 40), (Fig. 41)or (Fig. 42).

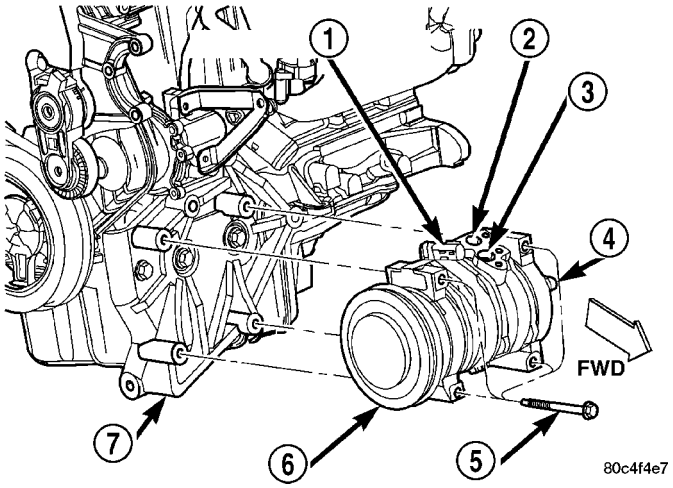

Fig. 40 A/C Compressor Remove/Install

1 - CLUTCH COIL CONNECTOR
2 - DISCHARGE PORT
3 - SUCTION PORT
4 - HIGH PRESSURE CUT-OUT SWITCH
5 - SCREW
6 - COMPRESSOR
7 - BRACKET

(6) Remove the screw that secures the suction line fitting to the compressor suction port (Fig. 41).

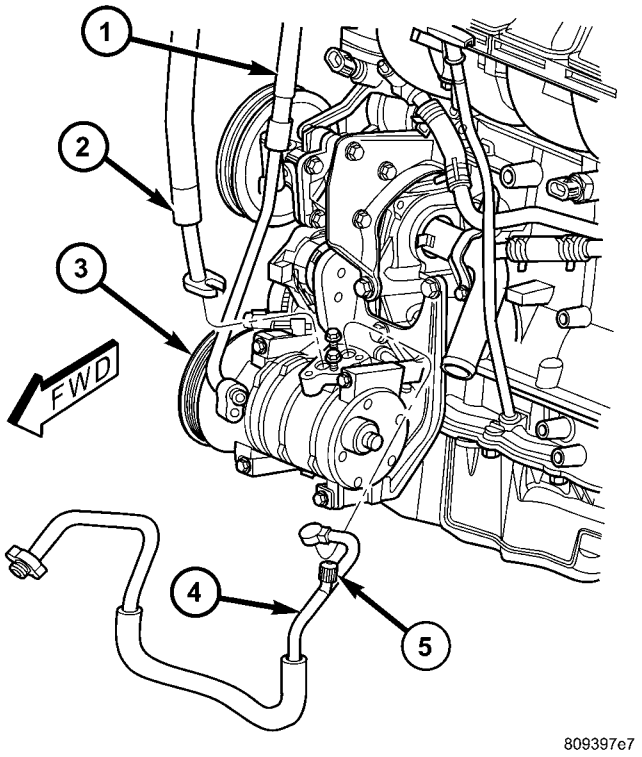

Fig. 41 A/C Refrigerant Lines - Compressor

1 - LIQUID LINE
2 - SUCTION LINE
3 - COMPRESSOR
4 - DISCHARGE LINE
5 - HIGH SIDE SERVICE PORT

(7) Disconnect the suction line fitting from the compressor suction port.

(8) Remove the rubber O-ring seal from the refrigerant line fitting of the suction line and discard.

(9) Install plugs in, or tape over the opened compressor suction port and the refrigerant line fitting of the suction line.

(10) Remove the screw that secures the discharge line fitting to the compressor discharge port.

(11) Disconnect the discharge line fitting from the compressor discharge port.

(12) Remove the rubber O-ring seal from the refrigerant line fitting of the discharge line and discard.

(13) Install plugs in, or tape over the opened compressor discharge port and the refrigerant line fitting of the discharge line.

(14) Remove the four screws that secure the compressor to the lower front strut-to-engine bracket.

(15) Remove the compressor from the engine compartment.

A/C COMPRESSOR (Continued)

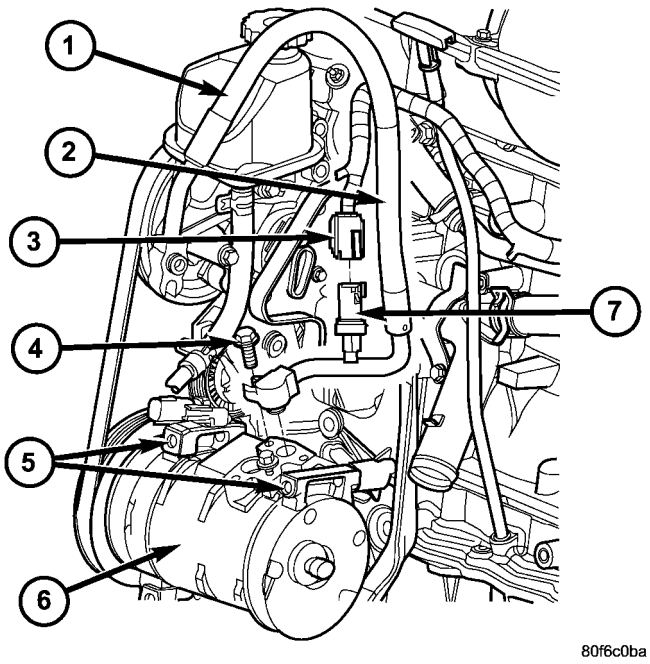

Fig. 42 A/C Compressor Removal/Installation 2.4L Turbo

1 - Power Steering Fluid Tank
2 - A/C Discharge Line
3 - High Pressure Cutoff Switch Electrical Connector
4 - Discharge Line Connection Bolt
5 - A/C Compressor Mounting Bolts (4 total)
6 - A/C Compressor
7 - High Pressure Cutoff Switch / High Side Charging Port

INSTALLATION

The compressor may be removed from the mounting bracket and repositioned without disconnecting the refrigerant lines or discharging the refrigerant system. Discharging is not necessary if servicing the compressor clutch or clutch coil, the engine, the cylinder head or the generator.

WARNING: REVIEW THE WARNINGS AND CAUTIONS IN THE FRONT OF THIS GROUP BEFORE PERFORMING THE FOLLOWING OPERATION.

NOTE: If a replacement compressor is being installed, be certain to check the refrigerant oil level. See Refrigerant Oil Level in this group for the procedures. Use only refrigerant oil of the type recommended for the compressor in the vehicle.

(1) Position the compressor into the engine compartment.

(2) Install and tighten the four screws that secure the compressor to the lower front strut-to-engine bracket. Tighten the screws to 28.3 N·m (250 in. lbs.).

(3) Remove the tape or plugs from the compressor discharge port and the refrigerant line fitting of the discharge line.

(4) Lubricate a new rubber O-ring seal with clean refrigerant oil and install it on the refrigerant line fitting of the discharge line. Use only the specified O-rings as they are made of a special material for the R-134a system. Use only refrigerant oil of the type recommended for the compressor in the vehicle.

(5) Reconnect the discharge line fitting to the compressor discharge port.

(6) Install and tighten the screw that secures the discharge line fitting to the compressor discharge port. Tighten the screw to 12.2 N·m (108 in. lbs.).

(7) Remove the tape or plugs from the compressor suction port and the refrigerant line fitting of the suction line.

(8) Lubricate a new rubber O-ring seal with clean refrigerant oil and install it on the refrigerant line fitting of the suction line. Use only the specified O-rings as they are made of a special material for the R-134a system. Use only refrigerant oil of the type recommended for the compressor in the vehicle.

(9) Reconnect the suction line fitting to the compressor suction port.

(10) Install and tighten the screw that secures the suction line fitting to the compressor suction port. Tighten the screw to 12.2 N·m (108 in. lbs.).

(11) Reconnect the engine wire harness connectors to the compressor clutch coil connector and the high pressure cut out switch.

(12) Reinstall the serpentine drive belt(Refer to 7 - COOLING/ACCESSORY DRIVE/DRIVE BELTS - INSTALLATION), (Refer to 7 - COOLING/ACCESSORY DRIVE/DRIVE BELTS - INSTALLATION) or (Refer to 7 - COOLING/ACCESSORY DRIVE/DRIVE BELTS - INSTALLATION).

(13) Lower the vehicle.

(14) Reconnect the battery negative cable.

(15) Evacuate the refrigerant system(Refer to 24 - HEATING & AIR CONDITIONING - STANDARD PROCEDURE).

(16) Charge the refrigerant system(Refer to 24 - HEATING & AIR CONDITIONING - STANDARD PROCEDURE).

A/C CONDENSER

DESCRIPTION

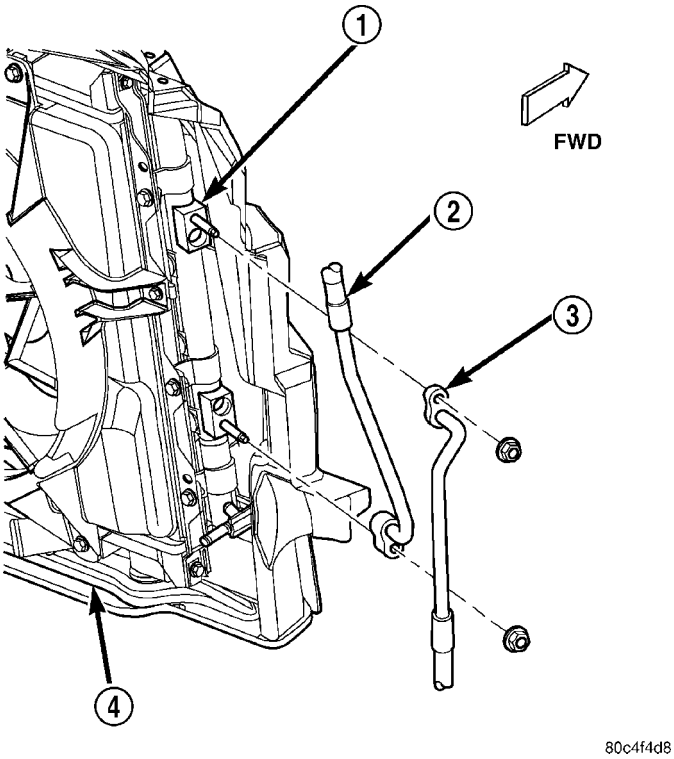

Fig. 43 Condenser

1 - CONDENSER
2 - LIQUID LINE
3 - DISCHARGE LINE
4 - COOLING MODULE

The condenser (Fig. 43) is integral to a cooling module which includes the radiator, the electric cooling fan, the fan shroud, air seals and an automatic transmission oil cooler on models so equipped. The cooling module is located in the air flow in the front of the engine compartment behind the front grille.

The condenser cannot be repaired or adjusted and, if faulty or damaged, it must be replaced. The cooling module must be removed from the vehicle in order to access the condenser for service.

OPERATION

The condenser is a heat exchanger that allows the high-pressure refrigerant gas being discharged by the compressor to give up its heat to the air passing over the condenser fins. When the refrigerant gas gives up its heat, it condenses. When the refrigerant leaves the condenser, it has become a high-pressure liquid refrigerant.

The volume of air flowing over the condenser fins is critical to the proper cooling performance of the air conditioning system. Therefore, it is important that there are no objects placed in front of the radiator grille openings in the front of the vehicle or foreign material on the condenser fins that might obstruct proper air flow. Also, any factory-installed air seals or shrouds must be properly reinstalled following radiator or condenser service.

REMOVAL

The condenser is located in front of the engine radiator. It has no serviceable parts. If damaged or leaking, the condenser assembly must be replaced.

WARNING: THE REFRIGERANT MUST BE REMOVED FROM THE SYSTEM BEFORE REMOVING THE CONDENSER.

(1) Using a R-134a refrigerant recovery machine, remove the refrigerant from the A/C system(Refer to 24 - HEATING & AIR CONDITIONING - STANDARD PROCEDURE)

(2) Remove battery support strut.

(3) Remove refrigerant lines from condenser (Refer to 24 - HEATING & AIR CONDITIONING/PLUMBING/LIQUID LINE - REMOVAL) and (Refer to 24 - HEATING & AIR CONDITIONING/PLUMBING/SUCTION LINE - REMOVAL). (Fig. 44).

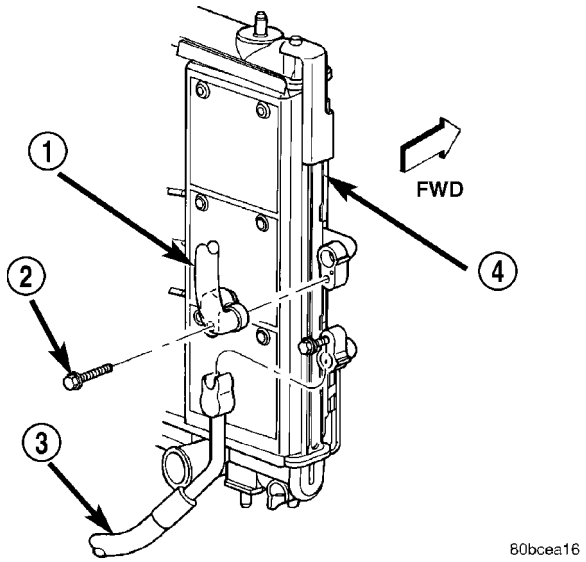

Fig. 44 Condenser Refrigerant Lines

1 - LIQUID LINE
2 - A/C LINE MOUNTING BOLTS
3 - DISCHARGE LINE
4 - CONDENSER

(4) Remove upper radiator mounts.

(5) Remove condenser to radiator mounting screws.

(6) Tilt radiator back and remove condenser.

A/C CONDENSER (Continued)

INSTALLATION

The condenser is located in front of the engine radiator. It has no serviceable parts. If damaged or leaking, the condenser assembly must be replaced.

(1) Tilt the radiator back and position the condenser in the vehicle.

(2) Install the condenser to radiator mounting screws.

(3) Install the upper radiator mounts.

(4) Install the refrigerant lines to the condenser (Refer to 24 - HEATING & AIR CONDITIONING/ PLUMBING/A/C DISCHARGE LINE - INSTALLATION) and (Refer to 24 - HEATING & AIR CONDITIONING/PLUMBING/LIQUID LINE - INSTALLATION).

(5) Install the battery support strut.

(6) Tighten the condenser refrigerant lines to 5 N·m (45 in lbs).

(7) Evacuate the refrigerant system (Refer to 24 - HEATING & AIR CONDITIONING - STANDARD PROCEDURE).

(8) Recharge the A/C system(Refer to 24 - HEATING & AIR CONDITIONING - STANDARD PROCEDURE)

A/C DISCHARGE LINE

DESCRIPTION - DISCHARGE LINE

The discharge line is the line that goes from the compressor to the condenser (Fig. 45)or (Fig. 46). It has no serviceable parts except the rubber O-rings. If the line is found to be leaking or is damaged it must be replaced as an assembly.

REMOVAL

WARNING: THE REFRIGERANT SYSTEM MUST BE RECOVERED BEFORE SERVICING ANY PART OF THE REFRIGERANT SYSTEM.

(1) Using a R-134a refrigerant recovery machine, remove the refrigerant from the A/C system(Refer to 24 - HEATING & AIR CONDITIONING - STANDARD PROCEDURE)

(2) From the top side of the vehicle, remove line at compressor (Fig. 47).

(3) From the bottom side of the vehicle, remove line at condenser.

INSTALLATION

WARNING: THE REFRIGERANT SYSTEM MUST BE RECOVERED BEFORE SERVICING ANY PART OF THE REFRIGERANT SYSTEM.

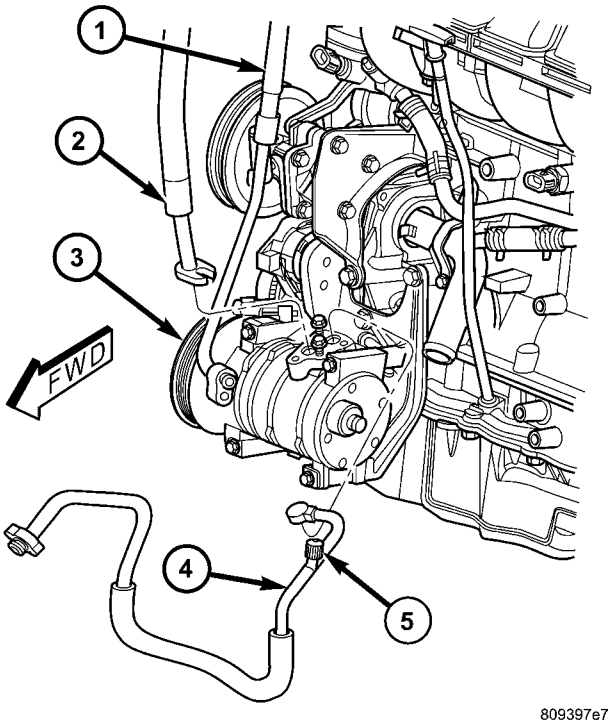

Fig. 45 A/C Refrigerant Lines - Compressor

1 - LIQUID LINE
2 - SUCTION LINE
3 - COMPRESSOR
4 - DISCHARGE LINE
5 - HIGH SIDE SERVICE PORT

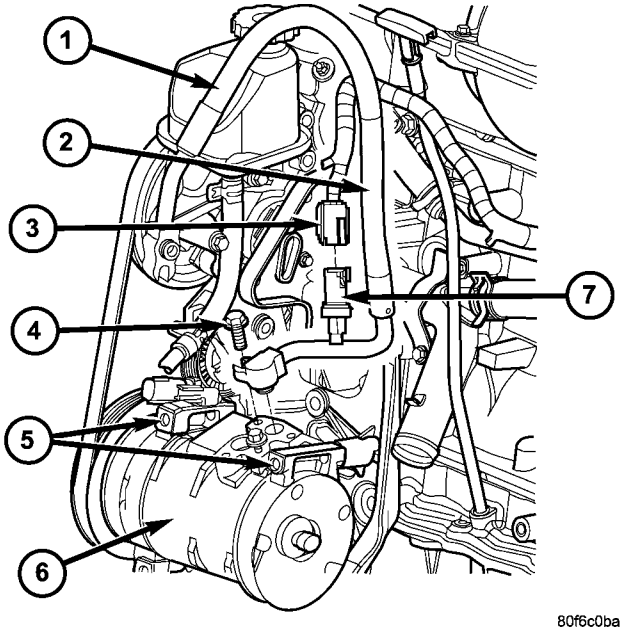

Fig. 46 A/C Compressor Removal/Installation 2.4L Turbo

1 - Power Steering Fluid Tank
2 - A/C Discharge Line
3 - High Pressure Cutoff Switch Electrical Connector
4 - Discharge Line Connection Bolt
5 - A/C Compressor Mounting Bolts (4 total)
6 - A/C Compressor
7 - High Pressure Cutoff Switch / High Side Charging Port

A/C DISCHARGE LINE (Continued)

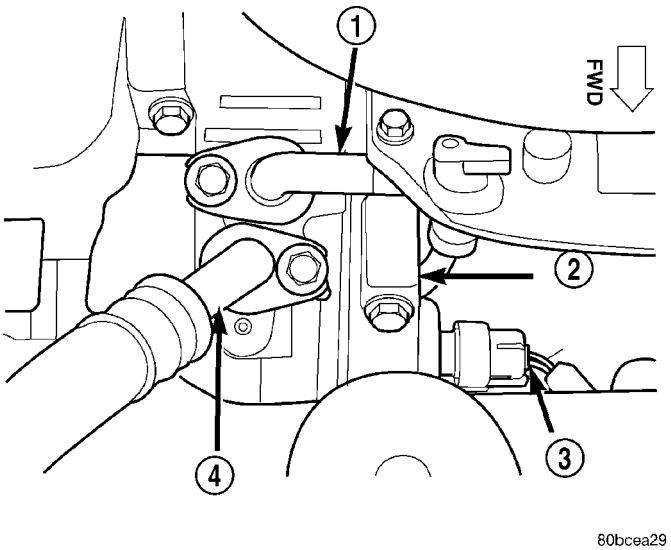

Fig. 47 Discharge Line

1 - DISCHARGE LINE
2 - A/C COMPRESSOR
3 - HIGH PRESSURE CUT OUT SWITCH
4 - SUCTION LINE

(1) Position the A/C discharge line in the vehicle and install the condenser end. Tighten the connections to 12 N·m (108 in. lbs.)

(2) Lower the vehicle and install the compressor end of the discharge line. Tighten the connections to 12 N·m (108 in. lbs.)

(3) Evacuate the refrigerant system (Refer to 24 - HEATING & AIR CONDITIONING - STANDARD PROCEDURE).

(4) Recharge the A/C system(Refer to 24 - HEATING & AIR CONDITIONING - STANDARD PROCEDURE).

A/C EVAPORATOR

DESCRIPTION

The evaporator (Fig. 48) is located in the heater-A/C unit housing, under the instrument panel. The evaporator is positioned in the heater-A/C housing so that all air that enters the housing must pass over the fins of the evaporator before it is distributed through the system ducts and outlets. However, air passing over the evaporator fins will only be conditioned when the compressor is engaged and circulating refrigerant through the evaporator tubes.

The heater-A/C unit housing must be removed from the vehicle to access the evaporator for service.

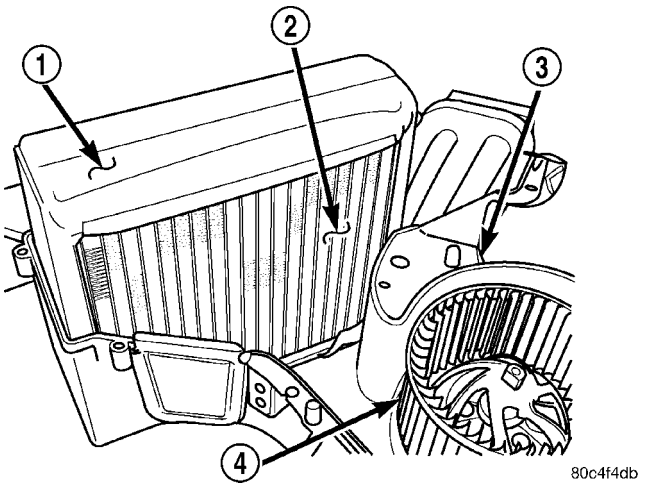

Fig. 48 Evaporator

1 - FOAM WRAP
2 - EVAPORATOR
3 - LOWER HEATER-A/C UNIT HOUSING
4 - BLOWER WHEEL

The evaporator cannot be adjusted or repaired and, if faulty or damaged, it must be replaced.

OPERATION

Refrigerant enters the evaporator from the variable orifice valve as a low-temperature, low-pressure liquid. As air flows over the fins of the evaporator, the humidity in the air condenses on the fins, and the heat from the air is absorbed by the refrigerant. Heat absorption causes the refrigerant to boil and vaporize. The refrigerant becomes a low-pressure gas when it leaves the evaporator.

REMOVAL

This vehicle uses an aluminum plate and fin style evaporator. It is located in the Evaporator/Blower module. If evaporator is leaking or damaged it must be replaced.

The heater-a/c housing must be removed from the vehicle before beginning with this procedure (Refer to 24 - HEATING & AIR CONDITIONING/DISTRIBUTION/HVAC HOUSING - REMOVAL).

Use this procedure if any or all of the following items require service:

- Evaporator
- Air inlet duct
- Heater Core
- Heating and Air Conditioning housing

A/C EVAPORATOR (Continued)

(1) Separate the foam seals at the evaporator line connection, and the dash panel air distribution outlets (Fig. 49).

(2) Disconnect fin sensing probe from harness.

(3) Remove upper to lower case retaining clip and screws.

(4) Separate the case halves (Fig. 50).

(5) Lift the evaporator out of the module (Fig. 51).

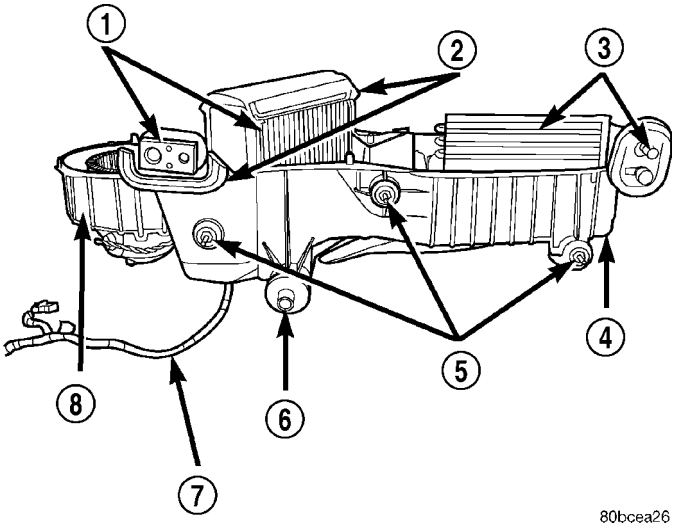

Fig. 49 Lower HVAC Housing

1 - EVAPORATOR AND CONNECTION
2 - FOAM SEALS
3 - HEATER CORE AND TUBES
4 - HVAC HOUSING LOWER CASE
5 - HOUSING MOUNTING STUDS
6 - HOUSING DRAIN
7 - WIRING
8 - BLOWER MOTOR AND WHEEL

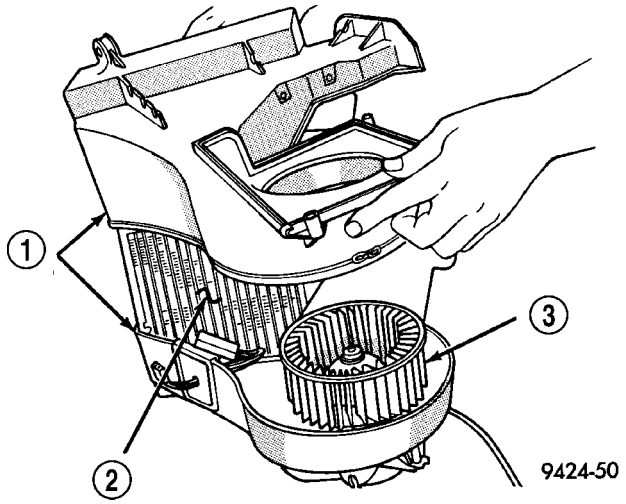

Fig. 50 Case Separation - Typical

1 - CASE HALVES
2 - EVAPORATOR
3 - BLOWER WHEEL

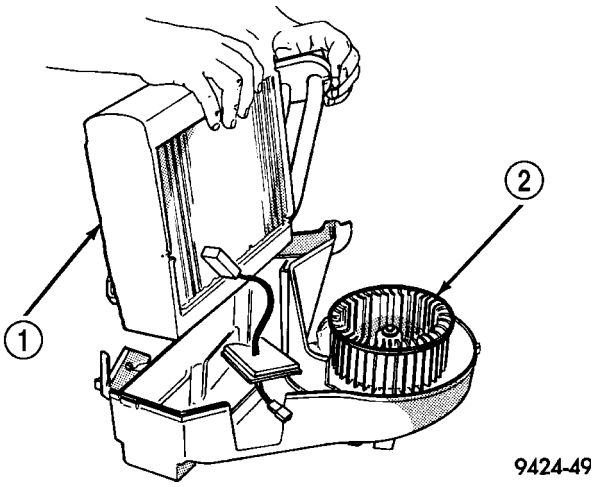

Fig. 51 Evaporator Removal - Typical

1 - EVAPORATOR
2 - BLOWER WHEEL

INSTALLATION

(1) Position the evaporator in the module.

(2) Close the case halves and install the retaining clip and screws (Refer to 24 - HEATING & AIR CONDITIONING/DISTRIBUTION/HVAC HOUSING - ASSEMBLY).

(3) Connect the fin sensing probe.

(4) Reposition the foam seals at the evaporator line and the dash panel air distribution outlets.

(5) Install the heater-a/c housing (Refer to 24 - HEATING & AIR CONDITIONING/DISTRIBUTION/HVAC HOUSING - INSTALLATION).

(6) Evacuate the refrigerant system (Refer to 24 - HEATING & AIR CONDITIONING - STANDARD PROCEDURE).

(7) Recharge the refrigerant system(Refer to 24 - HEATING & AIR CONDITIONING - STANDARD PROCEDURE)

A/C HIGH PRESSURE RELIEF VALVE

REMOVAL - HIGH PRESSURE RELIEF VALVE

WARNING: AVOID BREATHING A/C REFRIGERANT AND LUBRICANT VAPOR OR MIST. EXPOSURE MAY IRRITATE EYES, NOSE AND THROAT. USE ONLY APPROVED SERVICE EQUIPMENT MEETING SAE REQUIREMENTS TO DISCHARGE R-134a SYSTEM. IF ACCIDENTAL SYSTEM DISCHARGE OCCURS, VENTILATE WORK AREA BEFORE RESUMING SERVICE.
R-134a SERVICE EQUIPMENT OR VEHICLE A/C SYSTEM SHOULD NOT BE PRESSURE TESTED OR LEAK TESTED WITH COMPRESSED AIR. MIXTURE OF AIR and R-134a CAN BE COMBUSTIBLE AT ELEVATED PRESSURES. THESE MIXTURES ARE POTENTIALLY DANGEROUS AND MAY RESULT IN FIRE OR EXPLOSION CAUSING INJURY OR PROPERTY DAMAGE.

(1) Using a R-134a refrigerant recovery machine, remove the refrigerant from A/C system (Refer to 24 - HEATING & AIR CONDITIONING - STANDARD PROCEDURE).
(2) Rotate the high pressure relief valve counterclockwise and separate relief valve from the compressor.

INSTALLATION - HIGH PRESSURE RELIEF VALVE

WARNING: AVOID BREATHING A/C REFRIGERANT AND LUBRICANT VAPOR OR MIST. EXPOSURE MAY IRRITATE EYES, NOSE AND THROAT. USE ONLY APPROVED SERVICE EQUIPMENT MEETING SAE REQUIREMENTS TO DISCHARGE R-134a SYSTEM. IF ACCIDENTAL SYSTEM DISCHARGE OCCURS, VENTILATE WORK AREA BEFORE RESUMING SERVICE.
R-134a SERVICE EQUIPMENT OR VEHICLE A/C SYSTEM SHOULD NOT BE PRESSURE TESTED OR LEAK TESTED WITH COMPRESSED AIR. MIXTURE OF AIR and R-134a CAN BE COMBUSTIBLE AT ELEVATED PRESSURES. THESE MIXTURES ARE POTENTIALLY DANGEROUS AND MAY RESULT IN FIRE OR EXPLOSION CAUSING INJURY OR PROPERTY DAMAGE.

(1) Install a new O-ring.
(2) Position and rotate the compressor high pressure relief valve clockwise to install
(3) Evacuate the refrigerant system (Refer to 24 - HEATING & AIR CONDITIONING - STANDARD PROCEDURE).
(4) Recharge the A/C system(Refer to 24 - HEATING & AIR CONDITIONING - STANDARD PROCEDURE)

A/C VARIABLE ORIFICE TUBE

DESCRIPTION

A Variable Orifice Valve (VOV) is installed in the liquid line between the outlet of the condenser and the inlet of the evaporator. The inlet end of the Variable Orifice Valve has a nylon mesh filter screen, which filters the refrigerant and helps to reduce the potential for blockage of the metering orifices by refrigerant system contaminants. The outlet end of the tube has a nylon mesh diffuser screen. The O-rings on the plastic body of the VOV seal the tube to the inside of the liquid line and prevent refrigerant from bypassing the metering orifices.

The VOV is only serviced as an integral part of the liquid line. The VOV cannot be adjusted or repaired and, if faulty or plugged, the liquid line unit must be replaced.

REMOVAL - INSTALLATION

The Variable Orifice Valve (VOV) is located in the liquid line near the condenser. If the VOV is faulty or plugged, the liquid line unit must be replaced(Refer to 24 - HEATING & AIR CONDITIONING/PLUMBING/LIQUID LINE - REMOVAL) and (Refer to 24 - HEATING & AIR CONDITIONING/PLUMBING/LIQUID LINE - INSTALLATION).

ACCUMULATOR

DESCRIPTION

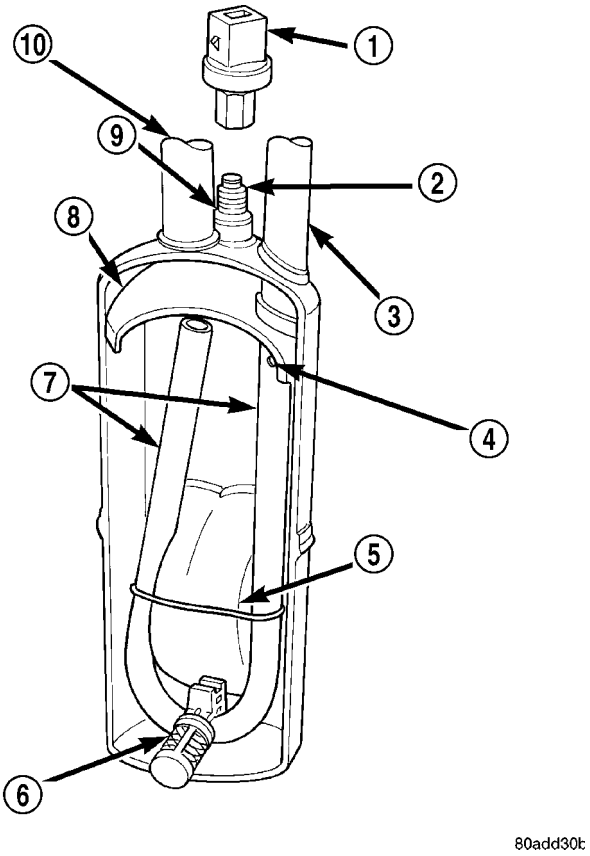

Fig. 52 Accumulator - Typical

1 - LOW PRESSURE CYCLING CLUTCH SWITCH
2 - PRESSURE SWITCH FITTING
3 - OUTLET TO COMPRESSOR
4 - ANTI-SIPHON HOLE
5 - DESICCANT BAG
6 - OIL RETURN ORIFICE FILTER
7 - VAPOR RETURN TUBE
8 - ACCUMULATOR DOME
9 - O-RING SEAL
10 - INLET FROM EVAPORATOR

The accumulator (Fig. 52) is mounted in the engine compartment between the evaporator outlet and the compressor suction port. An integral mounting bracket is used to secure the accumulator to the right side rail with a screw. Two connectors of the suction and liquid line assembly are sealed to an integral connector block on the top of the accumulator canister with rubber O-ring seals and secured there with two screws. A threaded fitting on the top of the accumulator canister provides the port through which the low pressure clutch cycling switch monitors the refrigerant system pressures.

The accumulator cannot be repaired and, if faulty or damaged, it must be replaced. The suction and liquid line assembly, the rubber O-rings and the low pressure clutch cycling switch are available for service replacement.

OPERATION

Refrigerant enters the accumulator canister as a low pressure vapor through the inlet tube. Any liquid, oil-laden refrigerant falls to the bottom of the canister, which acts as a separator. A desiccant bag located inside the accumulator canister absorbs any moisture which may have entered and become trapped within the refrigerant system.

REMOVAL

WARNING: REVIEW THE WARNINGS AND CAUTIONS IN THE FRONT OF THIS GROUP BEFORE PERFORMING THE FOLLOWING OPERATION.

(1) Recover the refrigerant from the refrigerant system(Refer to 24 - HEATING & AIR CONDITIONING - STANDARD PROCEDURE).

(2) Disconnect and isolate the battery negative cable.

(3) If the vehicle is so equipped, relocate the vehicle speed control servo as necessary to access the accumulator(Refer to 8 - ELECTRICAL/SPEED CONTROL/SERVO - REMOVAL) or (Refer to 8 - ELECTRICAL/SPEED CONTROL/SERVO - REMOVAL).

(4) Remove the low pressure clutch cycling switch from the accumulator(Refer to 24 - HEATING & AIR CONDITIONING/CONTROLS/A/C LOW PRESSURE SWITCH - REMOVAL).

(5) Remove the two screws that secure the two refrigerant line fittings of the suction and liquid line assembly to the accumulator connector block inlet and outlet ports (Fig. 53).

(6) Disconnect the two refrigerant line fittings of the suction and liquid line assembly from the accumulator connector block inlet and outlet ports.

(7) Remove the rubber O-ring seal from the refrigerant line fittings of the suction and liquid line assembly and discard.

(8) Install plugs in, or tape over the opened accumulator connector block inlet and outlet ports and the refrigerant line fittings of the suction and liquid line assembly.

(9) Remove the screw that secures the accumulator mounting bracket to the right side rail.

(10) Remove the accumulator from the engine compartment.

INSTALLATION

WARNING: REVIEW THE WARNINGS AND CAUTIONS IN THE FRONT OF THIS GROUP BEFORE PERFORMING THE FOLLOWING OPERATION.

ACCUMULATOR (Continued)

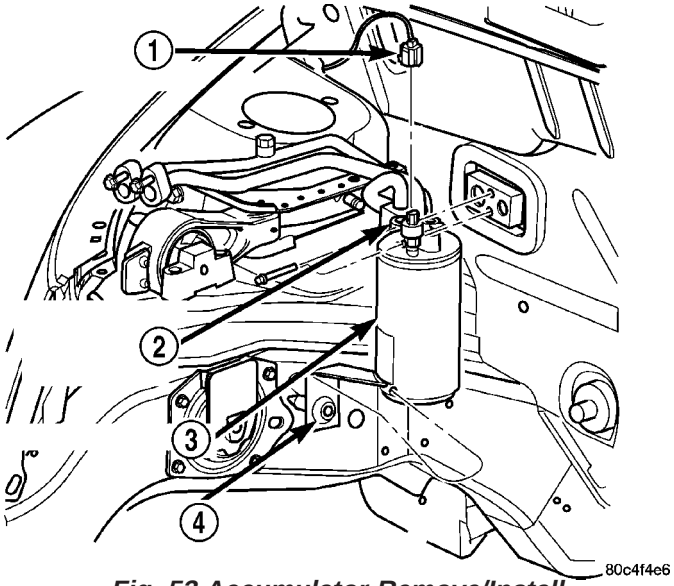

Fig. 53 Accumulator Remove/Install

1 - WIRE HARNESS CONNECTOR
2 - SUCTION AND LIQUID LINE ASSEMBLY
3 - ACCUMULATOR
4 - SCREW

(1) Position the accumulator into the engine compartment.

(2) Install and tighten the screw that secures the accumulator mounting bracket to the right side rail. Tighten the screw to 11.3 N·m (100 in. lbs.).

(3) Remove the tape or plugs from the accumulator connector block inlet and outlet ports and the refrigerant line fittings of the suction and liquid line assembly.

(4) Lubricate new rubber O-ring seals with clean refrigerant oil and install them on the refrigerant line fittings of the suction and liquid line assembly. Use only the specified O-rings as they are made of a special material for the R-134a system. Use only refrigerant oil of the type recommended for the compressor in the vehicle.

(5) Reconnect the refrigerant line fittings of the suction and liquid line assembly to the accumulator connector block inlet and outlet ports.

(6) Install and tighten the two screws that secure the two refrigerant line fittings of the suction and liquid line assembly to the accumulator connector block inlet and outlet ports. Tighten the screws to 2.3 N·m (20 in. lbs.).

(7) Reinstall the low pressure clutch cycling switch onto the accumulator(Refer to 24 - HEATING & AIR CONDITIONING/CONTROLS/A/C LOW PRESSURE SWITCH - INSTALLATION).

(8) If the vehicle is so equipped, reinstall the vehicle speed control servo(Refer to 8 - ELECTRICAL/SPEED CONTROL/SERVO - INSTALLATION) or (Refer to 8 - ELECTRICAL/SPEED CONTROL/SERVO - INSTALLATION).

(9) Reconnect the battery negative cable.

(10) Evacuate the refrigerant system(Refer to 24 - HEATING & AIR CONDITIONING - STANDARD PROCEDURE).

NOTE: If the accumulator is replaced, add 89 milliliters (3 fluid ounces) of refrigerant oil to the refrigerant system. Use only refrigerant oil of the type recommended for the compressor in the vehicle.

(11) Charge the refrigerant system(Refer to 24 - HEATING & AIR CONDITIONING - STANDARD PROCEDURE).

CONDENSATION DRAIN TUBE

DESCRIPTION

Condensation that accumulates in the evaporator housing is drained by a tube through the dash and on to the ground. This tube must be kept open to prevent condensate water from collecting in the bottom of the housing.

The tapered end of the drain tube is designed to keep contaminants from entering the heater A/C unit housing. If the tube is pinched or blocked, condensate cannot drain, causing water to back up and spill into the passenger compartment. It is normal to see condensate drainage below the vehicle. If the tube is damaged, it should be replaced.

REMOVAL

(1) Raise vehicle on a suitable lift.

(2) Locate rubber drain tube on right side of dash panel under the hood (Fig. 54).

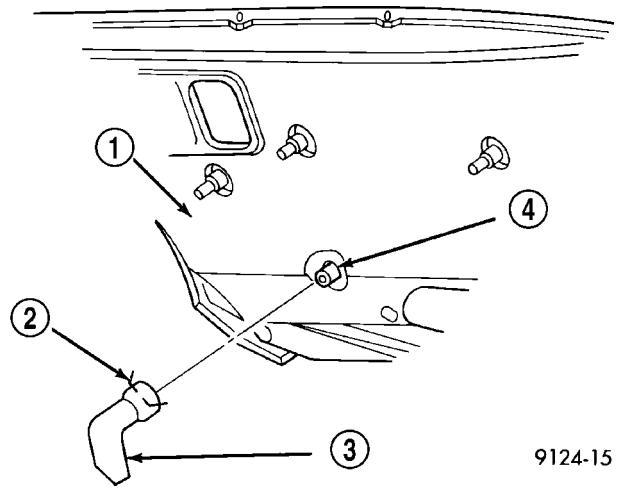

Fig. 54 Condensate Water Drain Tube –typical

1 - DASH PANEL (UNDER HOOD RIGHT SIDE)
2 - CLAMP
3 - CONDENSATE DRAIN TUBE
4 - NIPPLE-A/C HEATER HOUSING

(3) Squeeze clamp and remove drain tube.

CONDENSATION DRAIN TUBE (Continued)

INSTALLATION

(1) Squeeze the retaining clamp and install the tube over the nipple.

(2) Lower the vehicle.

HEATER CORE

DESCRIPTION

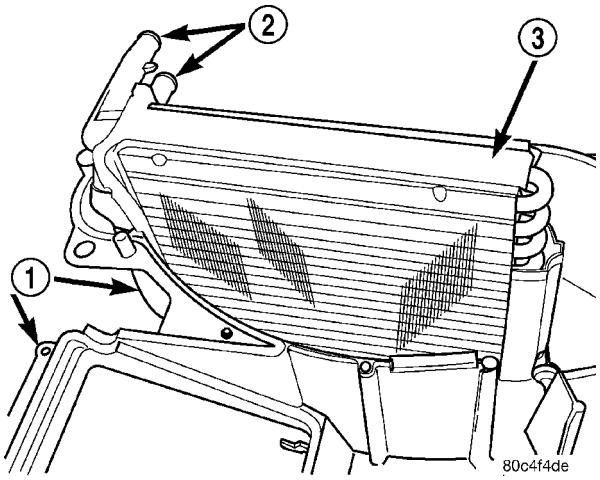

Fig. 55 Heater Core

1 - LOWER HEATER-A/C UNIT HOUSING
2 - HEATER CORE HOSE NIPPLES
3 - HEATER CORE

The heater core (Fig. 55) is located in the heater-A/C unit housing, under the instrument panel. It is a heat exchanger made of rows of tubes and fins. One end of the core is fitted with a molded plastic tank that includes the integral heater core hose nipples.

OPERATION

Engine coolant is circulated through heater hoses to the heater core at all times. As the coolant flows through the heater core, heat removed from the engine is transferred to the heater core fins and tubes. Air directed through the heater core picks up the heat from the heater core fins. The blend air door allows control of the heater output air temperature by controlling how much of the air flowing through the heater-A/C housing is directed through the heater core. The blower motor speed controls the volume of air flowing through the heater-A/C housing.

The heater core cannot be repaired and, if faulty or damaged, it must be replaced. Refer to Cooling System for more information on the engine cooling system, the engine coolant and the heater hoses.

REMOVAL

WARNING: ON VEHICLES EQUIPPED WITH AIR-BAGS, REFER TO PASSIVE RESTRAINT SYSTEMS BEFORE ATTEMPTING ANY STEERING WHEEL, STEERING COLUMN, OR INSTRUMENT PANEL COMPONENT DIAGNOSIS OR SERVICE. FAILURE TO TAKE THE PROPER PRE-CAUTIONS COULD RESULT IN ACCIDENTAL AIR-BAG DEPLOYMENT AND POSSIBLE PERSONAL INJURY.

WARNING: DO NOT OPEN THE RADIATOR DRAIN-COCK OR DISCONNECT COOLANT HOSES WHEN THE SYSTEM IS HOT AND UNDER PRESSURE. SERIOUS BURNS FROM COOLANT CAN OCCUR.

(1) Disconnect the negative battery cable.

(2) Drain the cooling system(Refer to 7 - COOLING/ENGINE - STANDARD PROCEDURE).

(3) Evacuate the refrigerant system(Refer to 24 - HEATING & AIR CONDITIONING - STANDARD PROCEDURE).

(4) Remove the instrument panel(Refer to 23 - BODY/INSTRUMENT PANEL/INSTRUMENT PANEL ASSEMBLY - REMOVAL).

(5) Remove the refrigerant lines from the evaporator connections.

(6) Remove the heater core coolant supply hoses from the heater core (Fig. 56).

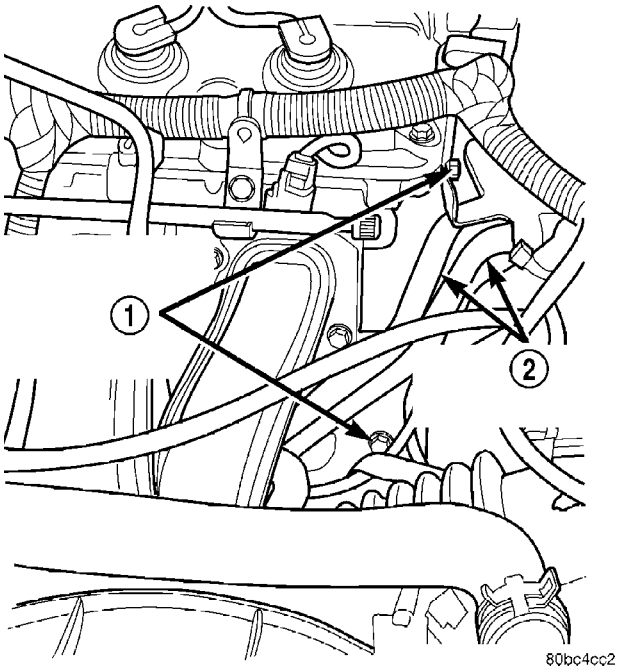

Fig. 56 Heater Core Coolant Supply Lines

1 - HEATER CORE COOLANT LINE SUPPORT BRACKET BOLTS
2 - HEATER CORE COOLANT SUPPLY LINES

(7) Working from inside the engine compartment, remove the A/C-heater housing retaining fateners from the bulk head.

(8) Remove the A/C-heater housing drain tube. Remove the spring clip from the A/C-heater housing and body attachement point.

HEATER CORE (Continued)

(9) Remove the A/C-heater housing retainer bolts.

(10) Disconnect the electrical connectors from the A/C-heater housing.

(11) Remove the A/C-heater housing from the vehicle and place the assembly on a bench.

(12) Dissemble the heater core(Refer to 24 - HEATING & AIR CONDITIONING/DISTRIBUTION/HVAC HOUSING - DISASSEMBLY).

(13) Remove the heater core from the housing.

INSTALLATION

(1) Install heater core into HVAC housing.

(2) Assemble the HVAC housing(Refer to 24 - HEATING & AIR CONDITIONING/DISTRIBUTION/HVAC HOUSING - ASSEMBLY).

(3) Take the HVAC housing from the work bench and place into vehicle.

(4) Install HVAC housing to vehicle(Refer to 24 - HEATING & AIR CONDITIONING/DISTRIBUTION/HVAC HOUSING - INSTALLATION).

(5) Install underhood HVAC housing drain tube to housing and install spring retainer clip.

(6) Install electrical connectors to HVAC housing.

(7) Install heater supply hoses to heater core connections(Refer to 24 - HEATING & AIR CONDITIONING/PLUMBING/HEATER INLET HOSE - INSTALLATION) and (Refer to 24 - HEATING & AIR CONDITIONING/PLUMBING/HEATER RETURN HOSE - INSTALLATION).

(8) Install refrigerant lines to the evaporator(Refer to 24 - HEATING & AIR CONDITIONING/PLUMBING/LIQUID LINE - INSTALLATION) and (Refer to 24 - HEATING & AIR CONDITIONING/PLUMBING/SUCTION LINE - INSTALLATION).

(9) Install the instrument panel assembly(Refer to 23 - BODY/INSTRUMENT PANEL/INSTRUMENT PANEL ASSEMBLY - INSTALLATION).

(10) Evacuate the refrigerant system(Refer to 24 - HEATING & AIR CONDITIONING - STANDARD PROCEDURE).

(11) Charge the refrigerant system(Refer to 24 - HEATING & AIR CONDITIONING - STANDARD PROCEDURE).

(12) Refill the cooling system(Refer to 7 - COOLING/ENGINE - STANDARD PROCEDURE) or (Refer to 7 - COOLING/ENGINE - STANDARD PROCEDURE).

(13) Connect the battery negative cable.

HEATER INLET HOSE

REMOVAL

CAUTION: When removing hoses from heater core inlet or outlet nipples DO NOT exert excess pressure. The heater core may become damaged and leak engine coolant.

NOTE: Review Cooling System Precautions before proceeding with this operation.

(1) Drain engine cooling system(Refer to 7 - COOLING/ENGINE - STANDARD PROCEDURE), (Refer to 7 - COOLING/ENGINE - STANDARD PROCEDURE) or (Refer to 7 - COOLING/ENGINE/COOLANT - STANDARD PROCEDURE).

(2) Using spring tension clamp pliers (or equivalent), remove clamps at end of heater hose to be removed (Fig. 57), (Fig. 58).

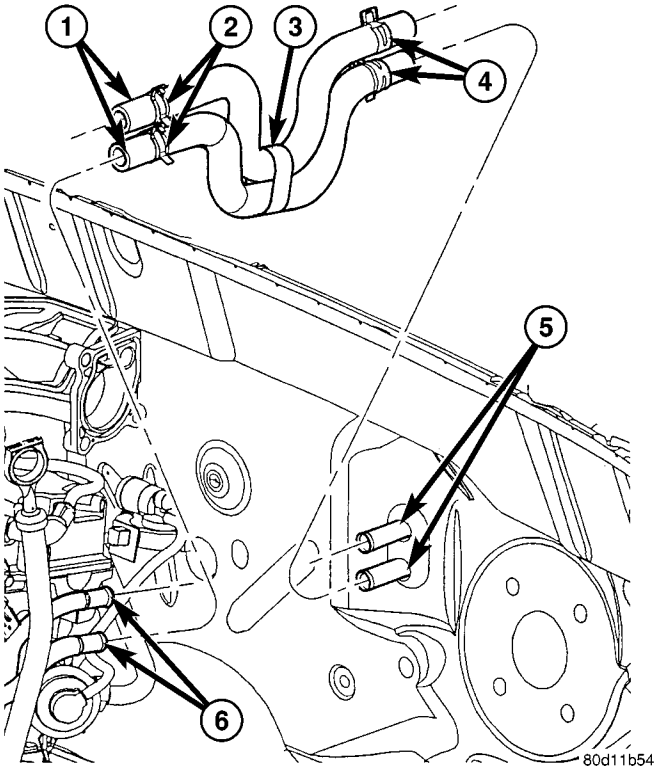

Fig. 57 Heater Hose Assembly- LHD 2.0L (typical 2.4L)

1 - Heater Hoses
2 - Heater Hose Clamps
3 - Heater Hose Retainer
4 - Heater Hose Clamps
5 - Heater Core Connections
6 - Engine Heater Pipes

(3) Carefully rotate hose back and forth while pulling away from connector nipple.

INSTALLATION

CAUTION: When removing hoses from heater core inlet or outlet nipples DO NOT exert excess pressure. The heater core may become damaged and leak engine coolant.

HEATER INLET HOSE (Continued)

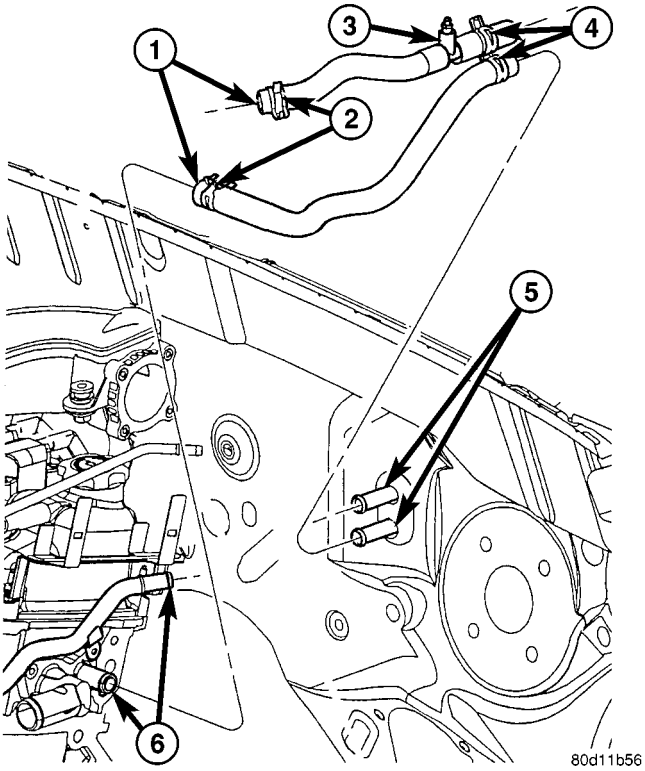

Fig. 58 Heater Hose Assembly- LHD 1.6L

1 - Heater Hoses
2 - Heater Hose Clamps
3 - Bleeder Assembly
4 - Heater Hose Clamps
5 - Heater Core Connections
6 - Engine Heater Pipes

NOTE: Review Cooling System Precautions before proceeding with this operation.

(1) Using spring tension clamp pliers, install the hose ends into position.

(2) Refill the cooling system(Refer to 7 - COOLING - STANDARD PROCEDURE)

HEATER RETURN HOSE

REMOVAL

CAUTION: When removing hoses from the heater core inlet nipples DO NOT exert excessive pressure. The heater core may become damaged and leak engine coolant.

NOTE: Review Cooling System Precautions before proceeding with this operation.

(1) Drain engine cooling system(Refer to 7 - COOLING/ENGINE - STANDARD PROCEDURE), (Refer to 7 - COOLING/ENGINE - STANDARD PROCEDURE) or (Refer to 7 - COOLING/ENGINE/ COOLANT - STANDARD PROCEDURE).

(2) Using spring tension clamp pliers (or equalivent), remove the clamps at the end of the heater hoses to be removed (Fig. 59), (Fig. 60).

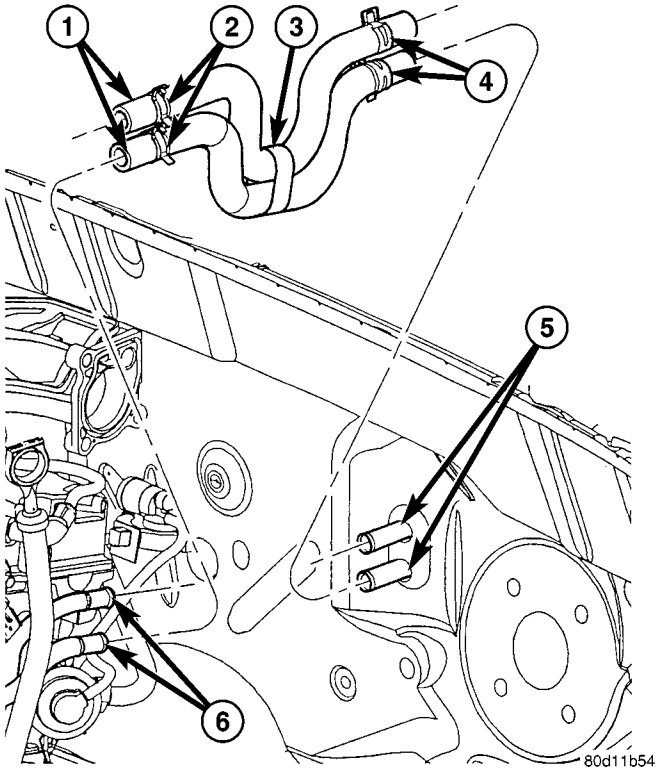

Fig. 59 Heater Hose Assembly- LHD 2.0L (Typical 2.4L)

1 - Heater Hoses
2 - Heater Hose Clamps
3 - Heater Hose Retainer
4 - Heater Hose Clamps
5 - Heater Core Connections
6 - Engine Heater Pipes

(3) Carefully rotate the hose back and forth while pulling away from the connector nipple.

INSTALLATION

CAUTION: When installing hoses to heater core inlet or outlet nipples DO NOT exert excessive pressure. The heater core may become damaged and leak engine coolant.

(1) Carefully rotate the hose back and forth while pushing the hose onto the connector nipple.

(2) Using spring tension pliers, install the clamps at the end of the heater hose being installed.

(3) Refill the cooling system (Refer to 7 - COOLING - STANDARD PROCEDURE).

HEATER RETURN HOSE (Continued)

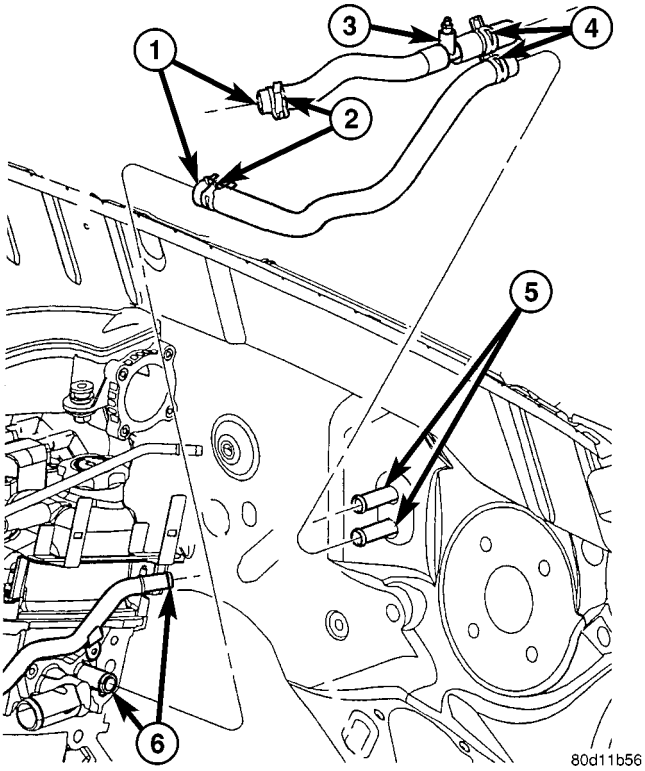

Fig. 60 Heater Hose Assembly- LHD 1.6L

1 - Heater Hoses
2 - Heater Hose Clamps
3 - Bleeder Assembly
4 - Heater Hose Clamps
5 - Heater Core Connections
6 - Engine Heater Pipes

LIQUID LINE

DESCRIPTION

The liquid line is the line that goes from the condenser to the receiver-drier. It has no serviceable parts except the rubber O-rings. If the line is found to be leaking or is damaged it must be replaced as an assembly.

REMOVAL

The liquid line includes the Variable Orifice Valve (VOV), which is located within this line. The VOV cannot be adjusted or repaired and, if faulty or damaged, the liquid line unit must be replaced.

WARNING: REVIEW THE WARNINGS AND CAUTIONS IN THE FRONT OF THIS GROUP BEFORE PERFORMING THE FOLLOWING OPERATION.

(1) Recover the refrigerant from the refrigerant system(Refer to 24 - HEATING & AIR CONDITIONING - STANDARD PROCEDURE).

(2) Remove the nut that secures the liquid line fitting to the outlet fitting (lower fitting) of the condenser (Fig. 61).

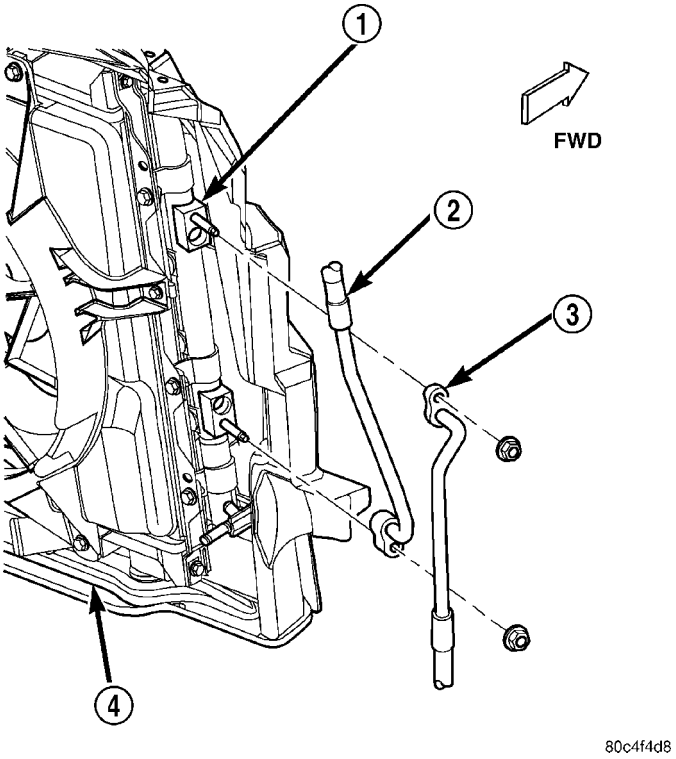

Fig. 61 A/C Refrigerant Lines - Condenser

1 - CONDENSER
2 - LIQUID LINE
3 - DISCHARGE LINE
4 - COOLING MODULE

(3) Disconnect the liquid line fitting from the condenser outlet fitting.

(4) Remove the rubber O-ring seal from the refrigerant line fitting of the liquid line and discard.

(5) Install plugs in, or tape over the opened condenser outlet fitting and the refrigerant line fitting of the liquid line.

(6) Remove the nut that secures the liquid line fitting (outboard fitting) to the mid-line connector block of the suction and liquid line assembly (Fig. 62).

(7) Disconnect the liquid line fitting from the mid-line connector block of the suction and liquid line assembly.

(8) Remove the rubber O-ring seal from the refrigerant line fitting of the liquid line and discard.

(9) Install plugs in, or tape over the opened mid-line connector block liquid line port and the refrigerant line fitting of the liquid line.

(10) Remove the liquid line from the engine compartment.

LIQUID LINE (Continued)

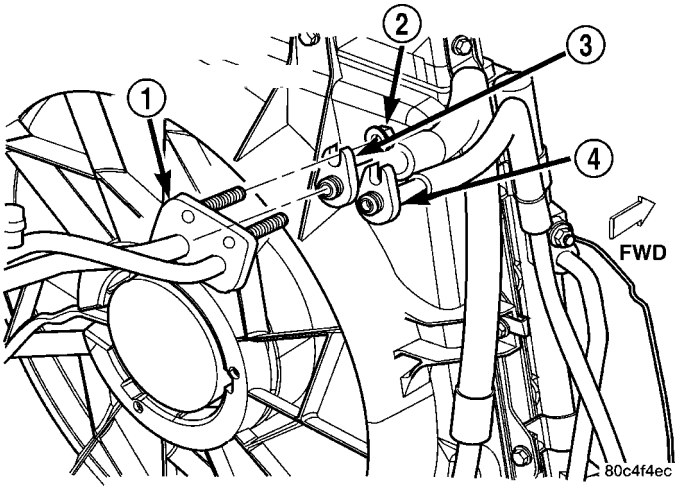

Fig. 62 A/C Refrigerant Lines - Mid-Line

1 - SUCTION AND LIQUID LINE ASSEMBLY MID-LINE CONNECTOR BLOCK
2 - NUT
3 - SUCTION LINE
4 - LIQUID LINE

INSTALLATION

WARNING: THE REFRIGERATION SYSTEM MUST BE COMPLETELY EMPTY BEFORE PROCEEDING WITH THIS OPERATION.

NOTE: Replacement of a/c line seals is required anytime connections are opened. Failure to replace seals could result in a refrigerant leak.

(1) Connect the liquid line at the drier.
(2) Connect the liquid line at the condenser.
(3) Evacuate the A/C system (Refer to 24 - HEATING & AIR CONDITIONING - STANDARD PROCEDURE).
(4) Recharge the refrigerant system (Refer to 24 - HEATING & AIR CONDITIONING - STANDARD PROCEDURE).

REFRIGERANT

DESCRIPTION

The refrigerant used in this air conditioning system is a HydroFluoroCarbon (HFC), type R-134a. Unlike R-12, which is a ChloroFluoroCarbon (CFC), R-134a refrigerant does not contain ozone-depleting chlorine. R-134a refrigerant is a non-toxic, non-flammable, clear, and colorless liquefied gas.

Even though R-134a does not contain chlorine, it must be reclaimed and recycled just like CFC-type refrigerants. This is because R-134a is a greenhouse gas and can contribute to global warming.

OPERATION

R-134a refrigerant is not compatible with R-12 refrigerant in an air conditioning system. Even a small amount of R-12 added to an R-134a refrigerant system will cause compressor failure, refrigerant oil sludge or poor air conditioning system performance. In addition, the PolyAlkylene Glycol (PAG) synthetic refrigerant oils used in an R-134a refrigerant system are not compatible with the mineral-based refrigerant oils used in an R-12 refrigerant system.

R-134a refrigerant system service ports, service tool couplers and refrigerant dispensing bottles have all been designed with unique fittings to ensure that an R-134a system is not accidentally contaminated with the wrong refrigerant (R-12). There are also labels posted in the engine compartment of the vehicle and on the compressor identifying to service technicians that the air conditioning system is equipped with R-134a.

STANDARD PROCEDURE - REFRIGERANT

This vehicle uses a refrigerant called R-134a. It is a non-toxic, non-flammable, clear colorless liquefied gas.

R-134a refrigerant is not compatible with R-12 refrigerant in an air conditioning system. Even a small amount of R-12 in a R-134a system could cause compressor failure, refrigerant oil to sludge and/or poor performance. **Never add any other type of refrigerant to a system designed to use R-134a refrigerant. System failure will occur.**

The high pressure service port is located on the filter/drier. The low pressure service port is located on the suction line near the strut tower.

REFRIGERANT (Continued)

When servicing a system, it is required that an air conditioning charging recovery/recycling machine be used (Fig. 63). Contact an automotive service equipment supplier for proper equipment. Refer to the operating instructions provided with the equipment for proper operation.

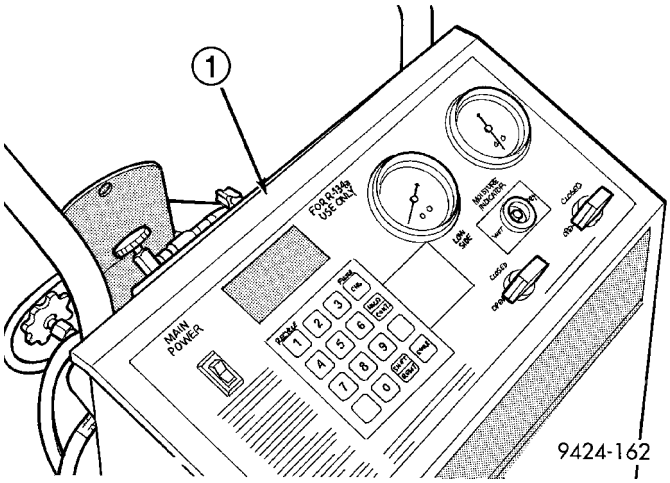

Fig. 63 Refrigerant Recovery/Recycling Station - Typical

1 - R-134 REFRIGERANT RECOVERY MACHINE

A manifold gauge set (Fig. 64) might be required with the charging and/or recovery/recycling device. Only use gauges that have not been used for R-12. The service hoses on the gauge set should have manual (turn wheel) or automatic back flow valves at the service port connector ends. This will prevent refrigerant R-134a from being released into the atmosphere.

R-134a refrigerant requires a special type of compressor oil. When adding oil, make sure to use the oil that is specified on the under hood label and/or the compressor housing.

The use of R-134a will have a positive environmental impact due to it's zero ozone depletion and low global warming impact.

REFRIGERANT OIL

DESCRIPTION

The refrigerant oil used in R-134a refrigerant systems is a synthetic-based, PolyAlkylene Glycol (PAG), wax-free lubricant. Mineral-based R-12 refrigerant oils are not compatible with PAG oils, and should never be introduced to an R-134a refrigerant system.

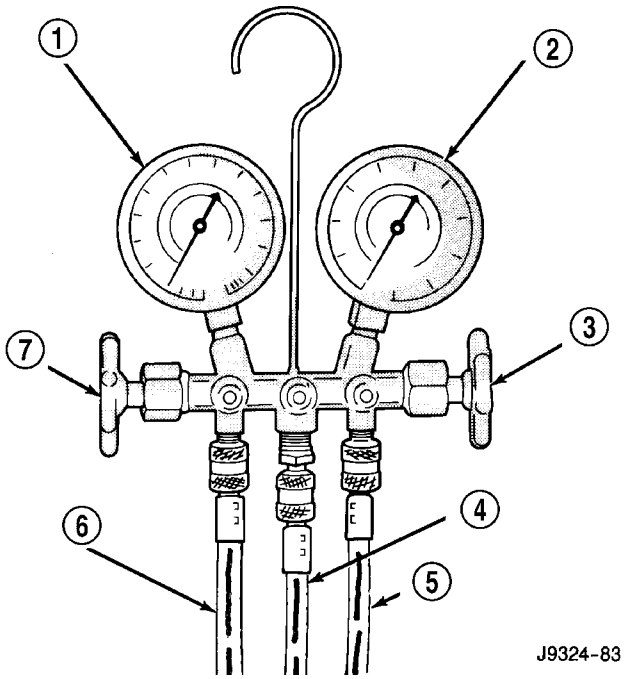

Fig. 64 Manifold Gauge Set - Typical

1 - LOW PRESSURE GAUGE
2 - HIGH PRESSURE GAUGE
3 - VALVE
4 - VACUUM/REFRIGERANT HOSE (YELLOW W/BLACK STRIP)
5 - HIGH PRESSURE HOSE (RED W/BLACK STRIP)
6 - LOW PRESSURE HOSE (BLUE W/BLACK STRIP)
7 - VALVE

There are different PAG oils available, and each contains a different additive package. The 10S15 and 10S17 compressors used in this vehicle is designed to use an ND-8 PAG refrigerant oil. Use only refrigerant oil of this same type to service the refrigerant system.

OPERATION

After performing any refrigerant recovery or recycling operation, always replenish the refrigerant system with the same amount of the recommended refrigerant oil as was removed. Too little refrigerant oil can cause compressor damage, and too much can reduce air conditioning system performance.

PAG refrigerant oil is much more hygroscopic than mineral oil, and will absorb any moisture it comes into contact with, even moisture in the air. The PAG oil container should always be kept tightly capped until it is ready to be used. After use, recap the oil container immediately to prevent moisture contamination.

REFRIGERANT OIL (Continued)

STANDARD PROCEDURE

STANDARD PROCEDURE - SERVICING REFRIGERANT OIL LEVEL

CAUTION: The refrigerant oil used in a R-134a A/C system is unique. Use only oils which were designed to work with R-134a refrigerant. The oil designated for this vehicle is ND8 PAG (polyalkalene glycol).

Recovery/recycling equipment will measure the lubricant being removed. This is the amount of lubricant to be added back to the system. If a new compressor is being installed, drain lubricant from the old compressor, measure the amount drained and discard old lubricant. Drain the lubricant from the new compressor into a clean container. Return the amount of lubricant measured from the old compressor, plus the amount reclaimed from the system back into the new compressor.

(1) Discharge refrigerant system using recovery/recycling equipment if charge is present (Refer to 24 - HEATING & AIR CONDITIONING - STANDARD PROCEDURE).

(2) Disconnect refrigerant lines from A/C compressor. Cap the open lines to prevent moisture from entering system.

(3) Remove compressor from vehicle(Refer to 24 - HEATING & AIR CONDITIONING/PLUMBING/A/C COMPRESSOR - REMOVAL).

(4) From suction port on top of compressor, drain lubricant from compressor.

(5) Add system capacity minus the capacity of components that have not been replaced(Refer to 24 - HEATING & AIR CONDITIONING/PLUMBING/REFRIGERANT - STANDARD PROCEDURE) Add lubricant through the suction port on compressor. This is not to exceed 180 ml (6.10 oz.) in total.

(6) Install compressor and connect refrigerant lines. Then evacuate and charge refrigerant system-(Refer to 24 - HEATING & AIR CONDITIONING - STANDARD PROCEDURE)

STANDARD PROCEDURE - REFRIGERANT OIL LEVEL CHECK

It is important to have the correct amount of oil in the A/C system to ensure proper lubrication of the compressor. Too little oil will result in damage to the compressor. Too much oil will reduce the cooling capacity of the system and consequently result in higher discharge air temperatures.

NOTE: The oil used in the compressor is ND8 PAG R-134a refrigerant oil. Only refrigerant oil of the same type should be used to service the system. Do not use any other oil. The oil container should be kept tightly capped until it is ready for use. Tightly cap afterwards to prevent contamination from dirt and moisture. Refrigerant oil will quickly absorb any moisture it comes in contact with. Special effort must be used to keep all R-134a system components moisture-free. Moisture in the oil is very difficult to remove and will cause a reliability problem with the compressor.

It will not be necessary to check oil level in the compressor or to add oil unless there has been an oil loss. Oil loss at a leak point will be evident by the presence of a wet, shiny surface around the leak.

When an air conditioning system is first assembled, all components (except the compressor) are refrigerant oil free. After the system has been charged with R-134a refrigerant and operated, the oil in the compressor is dispersed through the lines and components. The evaporator, condenser, and filter-drier will retain a significant amount of oil, refer to the Refrigerant Oil Capacities chart. When a component is replaced, the specified amount of refrigerant oil must be added. When the compressor is replaced, the amount of oil that is retained in the rest of the system must be drained from the replacement compressor. When a line or component has ruptured and oil has escaped, the compressor should be removed and drained. The filter-drier must be replaced along with the ruptured part. The oil capacity of the system, minus the amount of oil still in the remaining components, can be measured and poured into the suction port of the compressor.

REFRIGERANT OIL CAPACITIES

Refrigerant Oil Capacities		
Component	ml	oz
Total System	180ml	6.1 oz
Filter-Drier	30 ml	1.0 oz
Condenser	30 ml	1.0 oz
Evaporator	59 ml	2.0 oz
All Refrigerant Lines	44 ml	1.5 oz

SUCTION LINE

DESCRIPTION

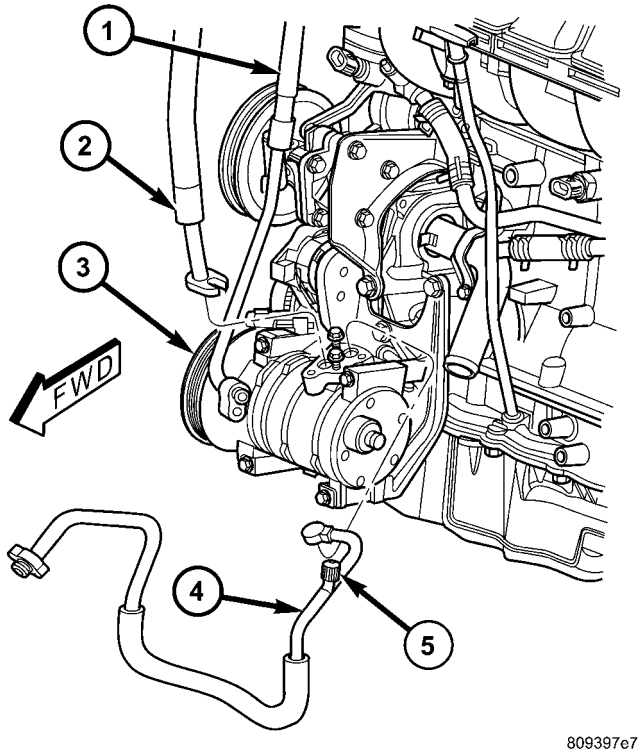

Fig. 65 A/C Refrigerant Lines - Compressor

1 - LIQUID LINE
2 - SUCTION LINE
3 - COMPRESSOR
4 - DISCHARGE LINE
5 - HIGH SIDE SERVICE PORT

The refrigerant lines and hoses (Fig. 65), (Fig. 66) and (Fig. 67) are used to carry the refrigerant between the various air conditioning system components. A barrier hose design with a nylon tube, which is sandwiched between rubber layers, is used for the R-134a air conditioning system on this vehicle. This nylon tube helps to further contain the R-134a refrigerant, which has a smaller molecular structure than R-12 refrigerant. The ends of the refrigerant hoses are made from lightweight aluminum or steel, and commonly use braze-less fittings.

Any kinks or sharp bends in the refrigerant plumbing will reduce the capacity of the entire air conditioning system. Kinks and sharp bends reduce the flow of refrigerant in the system. A good rule for the flexible hose refrigerant lines is to keep the radius of all bends at least ten times the diameter of the hose. In addition, the flexible hose refrigerant lines should be routed so they are at least 80 millimeters (3 inches) from the exhaust manifold.

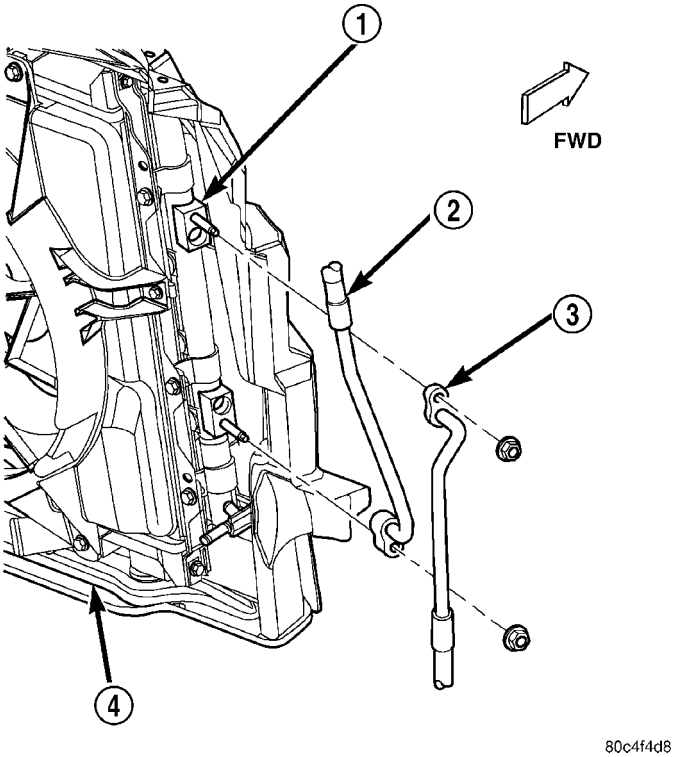

Fig. 66 A/C Refrigerant Lines - Condenser

1 - CONDENSER
2 - LIQUID LINE
3 - DISCHARGE LINE
4 - COOLING MODULE

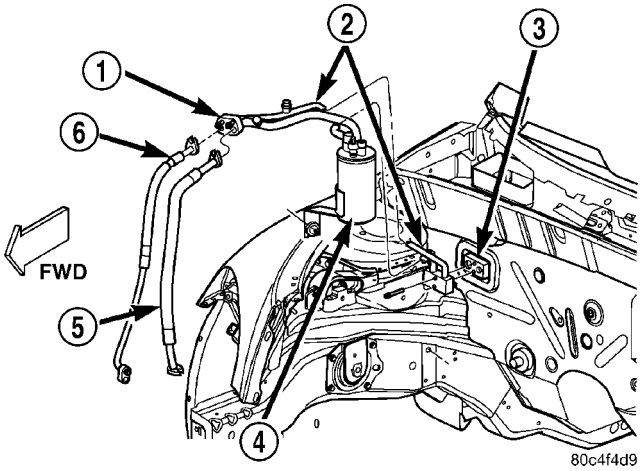

Fig. 67 A/C Refrigerant Lines - Accumulator/ Evaporator

1 - MID-LINE CONNECTOR BLOCK
2 - SUCTION & LIQUID LINE ASSEMBLY
3 - EVAPORATOR
4 - ACCUMULATOR
5 - SUCTION LINE
6 - LIQUID LINE

SUCTION LINE (Continued)

OPERATION

The refrigerant lines used for this vehicle are common between the two optional engines in order to reduce complexity. The following refrigerant lines are available for service replacement on this vehicle:

- **Discharge line** - The discharge line is a flexible hose type line that is connected from the discharge port of the compressor to the inlet (upper fitting) of the condenser. It has no serviceable parts except the rubber O-ring seals used on the fittings at each end of the line. If the discharge line is damaged or faulty, it must be replaced. (Fig. 68)

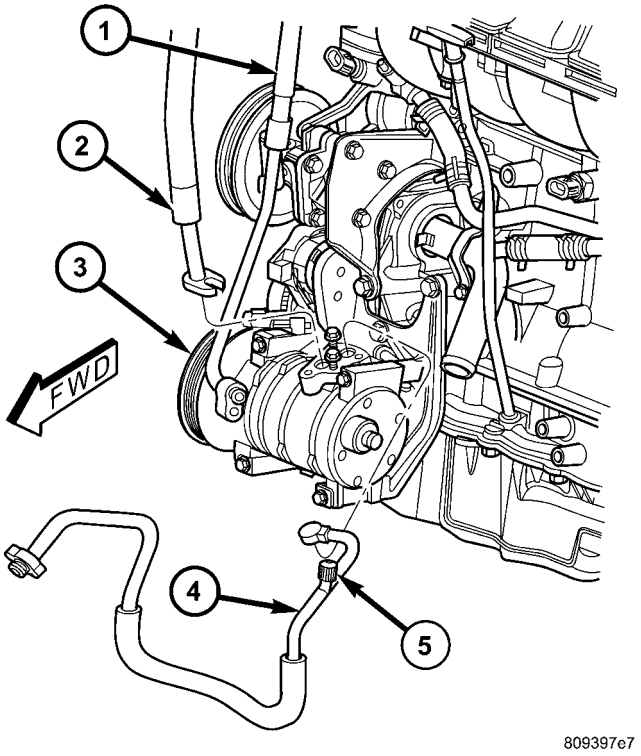

Fig. 68 A/C Refrigerant Lines - Compressor (Typical)

1 - LIQUID LINE
2 - SUCTION LINE
3 - COMPRESSOR
4 - DISCHARGE LINE
5 - HIGH SIDE SERVICE PORT

- **Liquid line** - The liquid line is a flexible hose type line that is connected between the outlet (lower fitting) of the condenser and the mid-line connector block of the suction and liquid line assembly. The liquid line also contains the variable orifice valve. It has no serviceable parts except the rubber O-ring seals used on the fittings at each end of the line. If the liquid line or the variable orifice valve are damaged or faulty, the liquid line unit must be replaced.
- **Suction line** - The suction line is a flexible hose type line that is connected between the mid-line connector block of the suction and liquid line assembly and the suction port of the compressor. It has no serviceable parts except the rubber O-ring seals used on the fittings at each end of the line. If the suction line is damaged or faulty, it must be replaced.
- **Suction and liquid line assembly** - The suction and liquid line assembly is a formed tubing type line assembly that includes the mid-line connector block, a connector block for the evaporator, inlet and outlet line fittings for the accumulator and both A/C service ports (Fig. 69). The A/C service port caps, the A/C service port valve cores, the gasket used to seal the connector block at the evaporator and the rubber O-ring seals for the line fittings at the accumulator are all available for service replacement. If any other part of the suction and liquid line assembly is damaged or faulty, the assembly must be replaced.

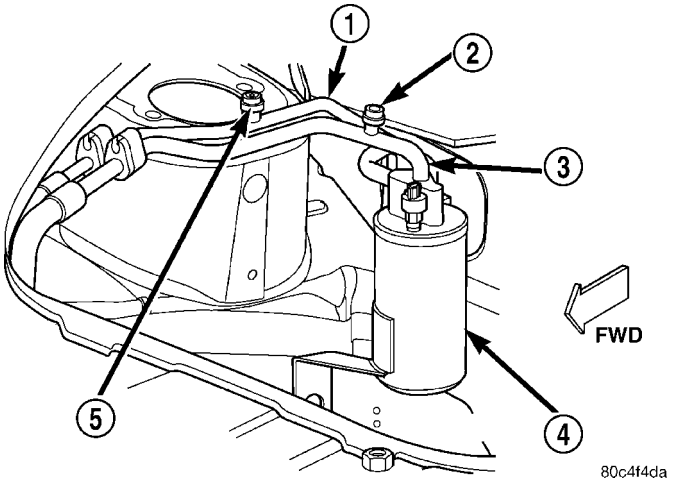

Fig. 69 A/C Service Ports

1 - LIQUID
2 - LOW SIDE SERVICE PORT
3 - SUCTION
4 - ACCUMULATOR
5 - HIGH SIDE SERVICE PORT (Not used for service on PT)

High pressures are produced in the refrigerant system when the air conditioning compressor is operating. Extreme care must be exercised to make sure that each of the refrigerant line connections is pressure-tight and leak free. It is a good practice to inspect all flexible hose refrigerant lines at least once a year to make sure they are in good condition and properly routed.

REMOVAL

WARNING: REVIEW THE WARNINGS AND CAUTIONS IN THE FRONT OF THIS GROUP BEFORE PERFORMING THE FOLLOWING OPERATION.

(1) Recover the refrigerant from the refrigerant system. Refer to **Refrigerant Recovery** in this group for the proper procedures.

SUCTION LINE (Continued)

(2) Remove the nut that secures the suction line fitting (inboard fitting) to the mid-line connector block of the suction and liquid line assembly (Fig. 70).

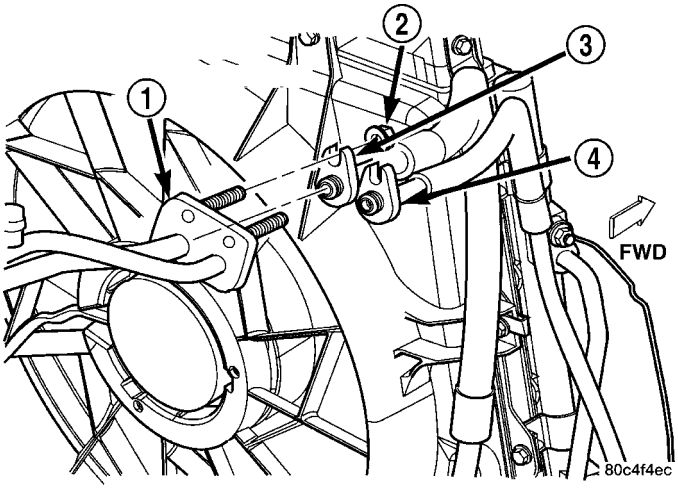

Fig. 70 A/C Refrigerant Lines - Mid-Line Connector

1 - SUCTION AND LIQUID LINE ASSEMBLY MID-LINE CONNECTOR BLOCK
2 - NUT
3 - SUCTION LINE
4 - LIQUID LINE

(3) Disconnect the suction line fitting from the mid-line connector block of the suction and liquid line assembly.

(4) Remove the rubber O-ring seal from the refrigerant line fitting of the suction line and discard.

(5) Install plugs in, or tape over the opened mid-line connector block suction line port and the refrigerant line fitting of the suction line.

(6) Raise and support the vehicle.

(7) Remove the screw that secures the suction line fitting to the compressor discharge port (Fig. 71).

(8) Disconnect the suction line fitting from the compressor suction port.

(9) Remove the rubber O-ring seal from the refrigerant line fitting of the suction line and discard.

(10) Install plugs in, or tape over the opened compressor suction port and the refrigerant line fitting of the suction line.

(11) Remove the suction line from the engine compartment.

INSTALLATION

WARNING: REVIEW THE WARNINGS AND CAUTIONS IN THE FRONT OF THIS GROUP BEFORE PERFORMING THE FOLLOWING OPERATION.

(1) Position the suction line into the engine compartment.

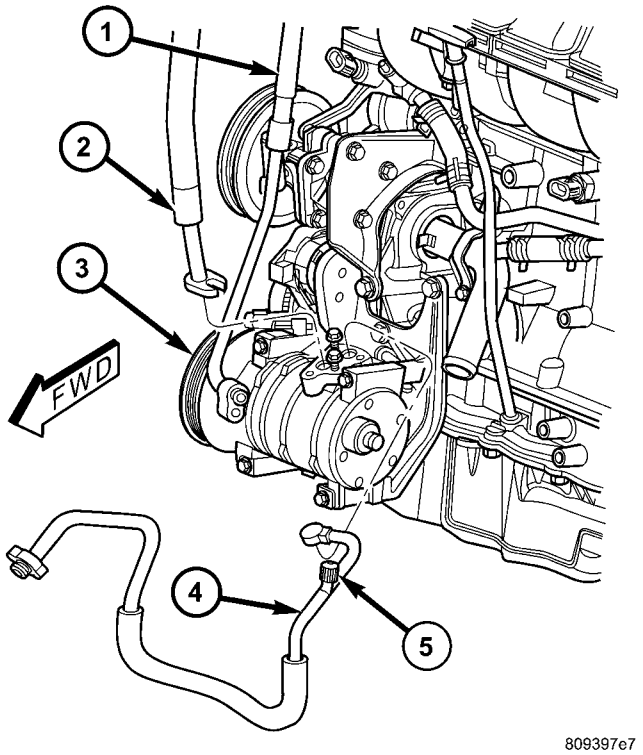

Fig. 71 A/C Refrigerant Lines - Compressor

1 - LIQUID LINE
2 - SUCTION LINE
3 - COMPRESSOR
4 - DISCHARGE LINE
5 - HIGH SIDE SERVICE PORT

(2) Remove the tape or plugs from the compressor suction port and the refrigerant line fitting of the suction line.

(3) Lubricate a new rubber O-ring seal with clean refrigerant oil and install it on the refrigerant line fitting of the suction line. Use only the specified O-rings as they are made of a special material for the R-134a system. Use only refrigerant oil of the type recommended for the compressor in the vehicle.

(4) Reconnect the suction line fitting to the compressor suction port.

(5) Install and tighten the screw that secures the suction line fitting to the compressor suction port. Tighten the screw to 12.2 N·m (108 in. lbs.).

(6) Lower the vehicle.

(7) Remove the tape or plugs from the mid-line connector block suction line port and the refrigerant line fitting of the suction line.

(8) Lubricate a new rubber O-ring seal with clean refrigerant oil and install it on the refrigerant line fitting of the suction line. Use only the specified O-rings as they are made of a special material for the R-134a system. Use only refrigerant oil of the type recommended for the compressor in the vehicle.

SUCTION LINE (Continued)

(9) Reconnect the suction line fitting to the mid-line connector block suction line port of the suction and liquid line assembly.

(10) Install and tighten the nut that secures the suction line fitting to the mid-line connector block of the suction and liquid line assembly. Tighten the nut to 4.5 N·m (40 in. lbs.).

(11) Evacuate the refrigerant system(Refer to 24 - HEATING & AIR CONDITIONING - STANDARD PROCEDURE).

(12) Charge the refrigerant system(Refer to 24 - HEATING & AIR CONDITIONING - STANDARD PROCEDURE).

SUCTION AND LIQUID LINE ASSEMBLY

REMOVAL

WARNING: REVIEW THE WARNINGS AND CAUTIONS IN THE FRONT OF THIS GROUP BEFORE PERFORMING THE FOLLOWING OPERATION.

(1) Recover the refrigerant from the refrigerant system(Refer to 24 - HEATING & AIR CONDITIONING - STANDARD PROCEDURE).

(2) Disconnect and isolate the battery negative cable.

(3) If the vehicle is so equipped, relocate the vehicle speed control servo as necessary to access the accumulator. Refer to **Vehicle Speed Control System** for the proper procedures.

(4) Remove the nut that secures the liquid line fitting (outboard fitting) to the mid-line connector block of the suction and liquid line assembly (Fig. 72).

(5) Disconnect the liquid line fitting from the mid-line connector block of the suction and liquid line assembly.

(6) Remove the rubber O-ring seal from the refrigerant line fitting of the liquid line and discard.

(7) Install plugs in, or tape over the opened mid-line connector block liquid line port and the refrigerant line fitting of the liquid line.

(8) Remove the nut that secures the suction line fitting to the mid-line connector block of the suction and liquid line assembly.

(9) Disconnect the suction line fitting from the mid-line connector block of the suction and liquid line assembly.

(10) Remove the rubber O-ring seal from the refrigerant line fitting of the suction line and discard.

(11) Install plugs in, or tape over the opened mid-line connector block suction line port and the refrigerant line fitting of the suction line.

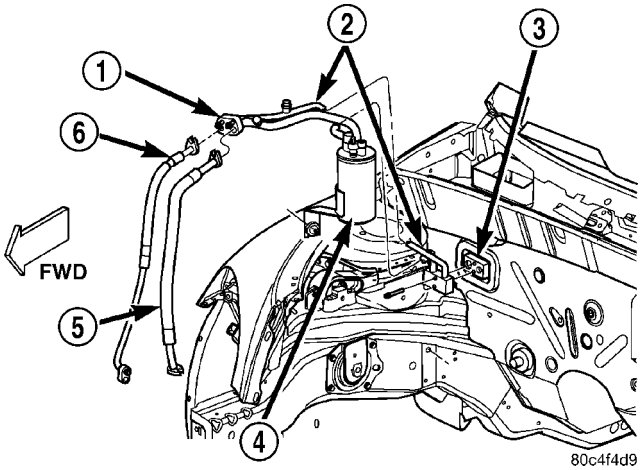

Fig. 72 A/C Refrigerant Lines - Accumulator/ Evaporator

1 - MID-LINE CONNECTOR BLOCK
2 - SUCTION & LIQUID LINE ASSEMBLY
3 - EVAPORATOR
4 - ACCUMULATOR
5 - SUCTION LINE
6 - LIQUID LINE

(12) Remove the two screws that secure the two refrigerant line fittings of the suction and liquid line assembly to the accumulator connector block inlet and outlet ports.

(13) Disconnect the two refrigerant line fittings of the suction and liquid line assembly from the accumulator connector block inlet and outlet ports.

(14) Remove the rubber O-ring seal from the refrigerant line fittings of the suction and liquid line assembly and discard.

(15) Install plugs in, or tape over the opened accumulator connector block inlet and outlet ports and the refrigerant line fittings of the suction and liquid line assembly.

(16) Remove the two screws that secure the suction and liquid line assembly evaporator connector block to the evaporator.

(17) Disconnect the suction and liquid line assembly evaporator connector block from the evaporator.

(18) Remove the gasket from the suction and liquid line assembly evaporator connector block and discard.

(19) Install plugs in, or tape over the opened suction and liquid line assembly evaporator connector block ports and the evaporator inlet and outlet ports.

(20) Remove the suction and liquid line assembly from the engine compartment.

INSTALLATION

WARNING: REVIEW THE WARNINGS AND CAUTIONS IN THE FRONT OF THIS GROUP BEFORE PERFORMING THE FOLLOWING OPERATION.

SUCTION AND LIQUID LINE ASSEMBLY (Continued)

(1) Position the suction and liquid line assembly into the engine compartment.

(2) Remove the tape or plugs from the suction and liquid line assembly evaporator connector block ports and the evaporator inlet and outlet ports.

(3) Align the suction and liquid line assembly evaporator connector block and a new gasket to the evaporator inlet and outlet ports.

(4) Install and tighten the two screws that secure the suction and liquid line assembly evaporator connector block to the evaporator. Tighten the upper screw to 11.3 N·m (100 in. lbs.) first, then tighten the lower screw.

(5) Remove the tape or plugs from the accumulator connector block inlet and outlet ports and the refrigerant line fittings of the suction and liquid line assembly.

(6) Lubricate new rubber O-ring seals with clean refrigerant oil and install them on the refrigerant line fittings of the suction and liquid line assembly. Use only the specified O-rings as they are made of a special material for the R-134a system. Use only refrigerant oil of the type recommended for the compressor in the vehicle.

(7) Reconnect the refrigerant line fittings of the suction and liquid line assembly to the accumulator connector block inlet and outlet ports.

(8) Install and tighten the two screws that secure the two refrigerant line fittings of the suction and liquid line assembly to the accumulator connector block inlet and outlet ports. Tighten the screws to 2.3 N·m (20 in. lbs.).

(9) Remove the tape or plugs from the mid-line connector block suction line port and the refrigerant line fitting of the suction line.

(10) Lubricate a new rubber O-ring seal with clean refrigerant oil and install it on the refrigerant line fitting of the suction line. Use only the specified O-rings as they are made of a special material for the R-134a system. Use only refrigerant oil of the type recommended for the compressor in the vehicle.

(11) Reconnect the suction line fitting to the mid-line connector block suction line port of the suction and liquid line assembly.

(12) Install and tighten the nut that secures the suction line fitting to the mid-line connector block of the suction and liquid line assembly. Tighten the nut to 4.5 N·m (40 in. lbs.).

(13) Remove the tape or plugs from the mid-line connector block liquid line port and the refrigerant line fitting of the liquid line.

(14) Lubricate a new rubber O-ring seal with clean refrigerant oil and install it on the refrigerant line fitting of the liquid line. Use only the specified O-rings as they are made of a special material for the R-134a system. Use only refrigerant oil of the type recommended for the compressor in the vehicle.

(15) Reconnect the liquid line fitting to the mid-line connector block liquid line port of the suction and liquid line assembly.

(16) Install and tighten the nut that secures the liquid line fitting to the mid-line connector block of the suction and liquid line assembly. Tighten the nut to 4.5 N·m (40 in. lbs.).

(17) If the vehicle is so equipped, reinstall the vehicle speed control servo. Refer to **Vehicle Speed Control System** for the proper procedures.

(18) Reconnect the battery negative cable.

(19) Evacuate the refrigerant system(Refer to 24 - HEATING & AIR CONDITIONING - STANDARD PROCEDURE).

(20) Charge the refrigerant system(Refer to 24 - HEATING & AIR CONDITIONING - STANDARD PROCEDURE).

SERVICE PORT VALVE CORE

DESCRIPTION

A/C SERVICE PORT VALVE CORES

The A/C service port valve cores are serviceable items (Fig. 73). The high side valve is located on the filter-drier, and the low side valve is situated on the suction line, near the washer fluid reservoir filler.

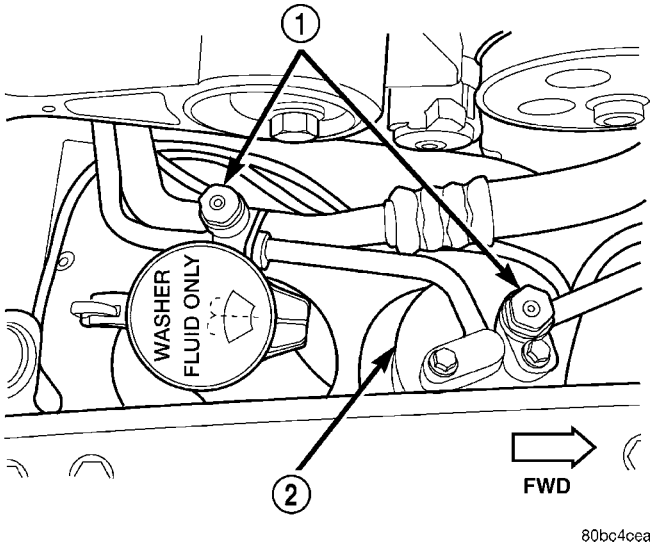

Fig. 73 A/C Service Port Valves

1 - A/C SERVICE PORTS
2 - FILTER/DRIER

SERVICE PORT VALVE CORE (Continued)

REMOVAL– SERVICE PORT VALVE CORES

(1) Remove the valve caps.

(2) Using a R-134a refrigerant recovery machine, Remove the refrigerant from A/C system (Refer to 24 - HEATING & AIR CONDITIONING - STANDARD PROCEDURE).

(3) Using a standard valve core tool, remove the valve core. **Be careful to prevent any dirt/debris from entering the valve core opening or getting on the replacement valve core.**

INSTALLATION - SERVICE PORT VALVE CORES

(1) When assembling the new valve core into the port, the core should be oiled with clean ND8 PAG compressor oil.

CAUTION: A valve that is not fully seated can lead to damage to the valve during evacuation and charge. This can result in system refrigerant discharge while uncoupling the charge adapters.

(2) Install valve core into port and tighten.

(3) Evacuate the refrigerant system (Refer to 24 - HEATING & AIR CONDITIONING - STANDARD PROCEDURE).

(4) Recharge the refrigerant system (Refer to 24 - HEATING & AIR CONDITIONING - STANDARD PROCEDURE).

(5) Install the valve caps.

A/C VARIABLE ORIFICE TUBE

DESCRIPTION

A Variable Orifice Valve (VOV) is installed in the liquid line between the outlet of the condenser and the inlet of the evaporator. The inlet end of the Variable Orifice Valve has a nylon mesh filter screen, which filters the refrigerant and helps to reduce the potential for blockage of the metering orifices by refrigerant system contaminants. The outlet end of the tube has a nylon mesh diffuser screen. The O-rings on the plastic body of the VOV seal the tube to the inside of the liquid line and prevent refrigerant from bypassing the metering orifices.

The VOV is only serviced as an integral part of the liquid line. The VOV cannot be adjusted or repaired and, if faulty or plugged, the liquid line unit must be replaced.

REMOVAL - INSTALLATION

The Variable Orifice Valve (VOV) is located in the liquid line near the condenser. If the VOV is faulty or plugged, the liquid line unit must be replaced(Refer to 24 - HEATING & AIR CONDITIONING/PLUMBING/LIQUID LINE - REMOVAL) and (Refer to 24 - HEATING & AIR CONDITIONING/PLUMBING/ LIQUID LINE - INSTALLATION).

CABIN HEATER

DESCRIPTION

The purpose of the cabin heater is to heat the engine coolant via resistance heating before it reaches the heater core. Current from the alternator is supplied to three glow plug type heating elements which reside in a single housing in the stream of coolant flow and as the coolant passes over the ends of the plugs the heat is transferred to the coolant on its way to the heater core.

OPERATION

At key on, three temperature sensors record the ambient air in order to determine if it is cold enough to turn on the cabin heaters. One sensor is in the vehicle on the battery under the driver's seat. The other two are in the engine compartment (inlet air temperature and manifold temperature). Based in the lowest temperature of the three sensors a pre-determined coolant temperature set point is established at which the cabin heaters will shut off.

For example, if the lowest recorded temperature from the three sensors is 0° C (32° F) or below, the heaters will shut off when the coolant temperature reaches 75° C (167°F). If the lowest ambient air temperature at key on is 10° C (50° F) or higher, then the heaters will not turn on.

There are three heating elements in the assembly: Plug 1 = 300W, Plug 2 = 400W and Plug 3 = 300W. Plug 1 is tied to one relay, while plugs 2 and 3 are tied to a second relay. Because there are 3 plugs with only 2 relays, when the cabin heater assembly is enabled by the engine controller, the firing sequence is as follows:

- a) Plug 1 only.
- b) Plugs 2 and 3 only.
- c) Plugs 1 to 3.

At each step, the engine controller monitors loads on the alternator to see if it is OK to proceed to the next phase of the firing sequence. The system will back out in the reverse order when a problem is encountered.

CABIN HEATER (Continued)

DIAGNOSIS AND TESTING - DIESEL ENGINE CABIN HEATER

The DRB-III© tester is programmed to allow the technician to turn each cabin heater relay on and off at a predetermined number of seconds. During this point, a voltage drop across each relay can be measured in order to determine whether they are functioning properly.

Checking the glow plug heating element entails measuring the resistance across each glow plug at room temperature (appx. 23° C, 74° F). The technician should unplug the 4–way cabin heater connector from the headlamp/dash wiring harness at the rear of the engine (rearward in vehicle above the exhaust manifold). Using an ohm-meter, measure the resistance across each glow plug by touching one probe to the aluminum cabin heater housing (ground) and the other probe to one of the terminals in the female cabin heater connector corresponding to each plug (pin 1= glow plug 1, pin 2=glow plug 2, etc.). Each heating element is functioning properly if the measured resistance is between 250–800 mOhm (.25–.8 Ohm) at room temperature (23° C, 74° F).

If one or more heating elements has a measured resistance outside this range and is not functioning properly then the entire heater assembly must be replaced.

NOTE: The process described above should be performed anytime a vehicle is serviced for a significant coolant loss. Glow plug life is affected whenever the cabin heater is operated with NO or LOW COOLANT FLOW across the glow plug tips.

HEATING & AIR COND. - RHD

TABLE OF CONTENTS

page

HEATING & AIR COND. - RHD
DESCRIPTION
ENGINE COOLING SYSTEM REQUIREMENTS . . . 59
SAFETY PRECAUTIONS AND WARNINGS . . 59
DIAGNOSIS AND TESTING
DIAGNOSIS AND TESTING - HEATER PERFORMANCE TEST . . . 59
DIAGNOSIS AND TESTING - A/C PERFORMANCE TEST . . . 60
STANDARD PROCEDURE
STANDARD PROCEDURE - HANDLING TUBING AND FITTINGS . . . 61
STANDARD PROCEDURE - SYSTEM CHARGE LEVEL TEST . . . 61
STANDARD PROCEDURE - EVACUATING REFRIGERANT SYSTEM . . . 62
STANDARD PROCEDURE - CHARGING A/C SYSTEM . . . 63
STANDARD PROCEDURE - SYSTEM LEAK CHECKING . . . 65
STANDARD PROCEDURE - REFRIGERANT RECOVERY . . . 65
SPECIFICATIONS
A/C APPLICATION TABLE . . . 66
TORQUE . . . 67
A/C COMPRESSOR CLUTCH RELAY
DESCRIPTION . . . 67
OPERATION . . . 68
REMOVAL . . . 68
INSTALLATION . . . 68
A/C HEATER CONTROL
DESCRIPTION . . . 69
DIAGNOSIS AND TESTING - VACUUM CONTROL SYSTEM . . . 69
REMOVAL . . . 71
INSTALLATION . . . 71
A/C COMPRESSOR CLUTCH COIL
REMOVAL . . . 72
INSTALLATION . . . 73
A/C HIGH PRESSURE SWITCH
DESCRIPTION . . . 74
REMOVAL . . . 74
INSTALLATION . . . 74
A/C LOW PRESSURE SWITCH
DESCRIPTION . . . 75
OPERATION . . . 75
DIAGNOSIS AND TESTING - A/C LOW PRESSURE CLUTCH CYCLING SWITCH . . . 75
REMOVAL . . . 75
INSTALLATION . . . 75
A/C PRESSURE TRANSDUCER
DESCRIPTION . . . 76
OPERATION . . . 76
DIAGNOSIS AND TESTING - A/C PRESSURE TRANSDUCER . . . 76
REMOVAL . . . 76
INSTALLATION . . . 76
BLOWER MOTOR RESISTOR BLOCK
DESCRIPTION . . . 76
REMOVAL . . . 76
INSTALLATION . . . 77
MODE DOOR CABLE
REMOVAL . . . 77
INSTALLATION . . . 78
RECIRCULATION DOOR ACTUATOR
DESCRIPTION . . . 78
REMOVAL . . . 79
INSTALLATION . . . 79
TEMPERATURE CONTROL CABLES
REMOVAL . . . 79
INSTALLATION . . . 80
DISTRIBUTION
DESCRIPTION
DESCRIPTION - SYSTEM AIRFLOW . . . 80
DESCRIPTION - HEATER AND AIR CONDITIONING . . . 81
AIR FILTER - EXPORT
DESCRIPTION . . . 81
REMOVAL . . . 81
INSTALLATION . . . 82
AIR FLOW DISTRIBUTION
DESCRIPTION . . . 82
OPERATION . . . 82
AIR OUTLETS
DESCRIPTION . . . 83
REMOVAL - CENTER AIR OUTLET DUCT . . . 83
INSTALLATION - CENTER AIR OUTLET DUCT . 83
BLOWER MOTOR
DESCRIPTION - BLOWER MOTOR WHEEL . . . 83
OPERATION . . . 83
DIAGNOSIS AND TESTING - BLOWER MOTOR . . . 83
REMOVAL . . . 83
INSTALLATION . . . 85
HVAC HOUSING
REMOVAL . . . 85
DISASSEMBLY . . . 86
ASSEMBLY . . . 86
INSTALLATION . . . 87

A/C COMPRESSOR
DESCRIPTION
DESCRIPTION 88
DESCRIPTION - COMPRESSOR FRONT SHAFT SEAL 88
OPERATION 88
DIAGNOSIS AND TESTING - COMPRESSOR NOISE 88
REMOVAL 88
INSTALLATION 89
A/C CONDENSER
DESCRIPTION 90
OPERATION 91
REMOVAL 91
INSTALLATION 91
A/C DISCHARGE LINE
DESCRIPTION - DISCHARGE LINE 92
REMOVAL 92
INSTALLATION 93
A/C EVAPORATOR
REMOVAL 93
INSTALLATION 94
A/C HIGH PRESSURE RELIEF VALVE
REMOVAL - HIGH PRESSURE RELIEF VALVE . 95
INSTALLATION - HIGH PRESSURE RELIEF VALVE 95
ACCUMULATOR
DESCRIPTION 95
OPERATION 95
REMOVAL 95
INSTALLATION 96
CONDENSATION DRAIN TUBE
DESCRIPTION 97
REMOVAL 97
INSTALLATION 97
HEATER CORE - EXPORT
DESCRIPTION 97
OPERATION 98
REMOVAL 98
INSTALLATION 99
HEATER INLET HOSE
REMOVAL 100
INSTALLATION 100
HEATER RETURN HOSE
REMOVAL 101
INSTALLATION 101
LIQUID LINE
DESCRIPTION 102
REMOVAL 102
INSTALLATION 102
REFRIGERANT
DESCRIPTION 103
OPERATION 103
STANDARD PROCEDURE - REFRIGERANT . . 103
REFRIGERANT OIL
DESCRIPTION 104
OPERATION 104
STANDARD PROCEDURE
STANDARD PROCEDURE - SERVICING REFRIGERANT OIL LEVEL 104
STANDARD PROCEDURE - REFRIGERANT OIL LEVEL CHECK 104
SUCTION LINE
DESCRIPTION 105
OPERATION 106
REMOVAL 107
INSTALLATION 108
SUCTION AND LIQUID LINE ASSEMBLY
REMOVAL 109
INSTALLATION 109
SERVICE PORT VALVE CORE
DESCRIPTION 110
REMOVAL– SERVICE PORT VALVE CORES . . 111
INSTALLATION - SERVICE PORT VALVE CORES 111
A/C VARIABLE ORIFICE TUBE
DESCRIPTION 111
REMOVAL - INSTALLATION 111
CABIN HEATER
DESCRIPTION 111
OPERATION 111
DIAGNOSIS AND TESTING - DIESEL ENGINE CABIN HEATER 111
HEATER UNIT
REMOVAL 112
INSTALLATION 112

HEATING & AIR COND. - RHD

DESCRIPTION

ENGINE COOLING SYSTEM REQUIREMENTS

To maintain ample temperature levels from the heating-A/C system, the cooling system must be in proper working order. Refer to Group 0, Lubrication and Maintenance or (Refer to 7 - COOLING - OPERATION)

The use of a bug screen is not recommended. Any obstructions forward of the condenser can reduce the effectiveness of the air conditioning system.

SAFETY PRECAUTIONS AND WARNINGS

WARNING: WEAR EYE PROTECTION WHEN SERVICING THE AIR CONDITIONING REFRIGERANT SYSTEM. SERIOUS EYE INJURY CAN RESULT FROM EYE CONTACT WITH REFRIGERANT. IF EYE CONTACT IS MADE, SEEK MEDICAL ATTENTION IMMEDIATELY.
DO NOT EXPOSE REFRIGERANT TO OPEN FLAME. POISONOUS GAS IS CREATED WHEN REFRIGERANT IS BURNED. AN ELECTRONIC TYPE LEAK DETECTOR IS RECOMMENDED.
LARGE AMOUNTS OF REFRIGERANT RELEASED IN A CLOSED WORK AREA WILL DISPLACE THE OXYGEN AND CAUSE SUFFOCATION.
THE EVAPORATION RATE OF REFRIGERANT AT AVERAGE TEMPERATURE AND ALTITUDE IS EXTREMELY HIGH. AS A RESULT, ANYTHING THAT COMES IN CONTACT WITH THE REFRIGERANT WILL FREEZE. ALWAYS PROTECT SKIN OR DELICATE OBJECTS FROM DIRECT CONTACT WITH REFRIGERANT. R-134a SERVICE EQUIPMENT OR VEHICLE A/C SYSTEM SHOULD NOT BE PRESSURE TESTED OR LEAK TESTED WITH COMPRESSED AIR.
SOME MIXTURES OF AIR and R-134a HAVE BEEN SHOWN TO BE COMBUSTIBLE AT ELEVATED PRESSURES. THESE MIXTURES ARE POTENTIALLY DANGEROUS AND MAY RESULT IN FIRE OR EXPLOSION CAUSING INJURY OR PROPERTY DAMAGE.
ANTIFREEZE IS AN ETHYLENE GLYCOL BASE COOLANT AND IS HARMFUL IF SWALLOWED OR INHALED. SEEK MEDICAL ATTENTION IMMEDIATELY IF SWALLOWED OR INHALED. DO NOT STORE IN OPEN OR UNMARKED CONTAINERS. WASH SKIN AND CLOTHING THOROUGHLY AFTER COMING IN CONTACT WITH ETHYLENE GLYCOL. KEEP OUT OF REACH OF CHILDREN AND PETS.
DO NOT OPEN A COOLING SYSTEM WHEN THE ENGINE IS AT RUNNING TEMPERATURE. PERSONAL INJURY CAN RESULT.

CAUTION: The engine cooling system is designed to develop internal pressure of 97 to 124 kPa (14 to 18 psi). Allow the vehicle to cool a minimum of 15 minutes before opening the cooling system (Refer to 7 - COOLING - DIAGNOSIS AND TESTING).

DIAGNOSIS AND TESTING

DIAGNOSIS AND TESTING - HEATER PERFORMANCE TEST

PRE-DIAGNOSTIC PREPARATIONS

Review Safety Precautions and Warnings(Refer to 24 - HEATING & AIR CONDITIONING - DESCRIPTION) in this group before performing the following procedures.

Check the coolant level, drive belt tension, vacuum line connections, radiator air flow and fan operation. Start engine and allow to warm up to normal temperature.

WARNING: DO NOT REMOVE RADIATOR CAP WHEN ENGINE IS HOT, PERSONAL INJURY CAN RESULT.

If vehicle has been run recently, wait 15 minutes before removing cap. Place a rag over the cap and turn it to the first safety stop. Allow pressure to escape through the overflow tube. When the system stabilizes, remove the cap completely.

MAXIMUM HEATER OUTPUT: TEST AND ACTION

Engine coolant is provided to the heater system by two 16 mm (5/8 inch inside diameter) heater hoses. With engine idling at normal running temperature, set the control to maximum heat, floor, and high blower setting. Using a test thermometer, check the air temperature coming from the floor outlets, refer to Temperature Reference chart.

TEMPERATURE REFERENCE CHART

Ambient Temp.		Minimum Floor Outlet Temp.	
Celsius	Fahrenheit	Celsius	Fahrenheit
15.5°	60°	62.2°	144°
21.1°	70°	63.8°	147°
26.6°	80°	65.5°	150°
32.2°	90°	67.2°	153°

If the floor outlet air temperature is insufficient (Refer to 7 - COOLING - DIAGNOSIS AND TESTING. Both heater hoses should be HOT to the touch (coolant return hose should be slightly cooler than the supply hose). If coolant return hose is much cooler than the supply hose, locate and repair engine coolant flow obstruction in heater system.

POSSIBLE LOCATIONS OR CAUSE OF OBSTRUCTED COOLANT FLOW

(1) Pinched or kinked heater hoses.
(2) Improper heater hose routing.
(3) Plugged heater hoses or supply and return ports at cooling system connections.
(4) Plugged heater core.
(5) Air locked heater core.
(6) If coolant flow is verified and outlet temperature is insufficient, a mechanical problem may exist.

POSSIBLE LOCATION OR CAUSE OF INSUFFICIENT HEAT

(1) Obstructed cowl air intake.
(2) Obstructed heater system outlets.
(3) Blend-air door not functioning properly.

TEMPERATURE CONTROL

If temperature cannot be adjusted with the Temperature knob one of the following could require service:

(1) Blend-air door binding.
(2) Faulty temperature control cable.
(3) Improper engine coolant temperature.
(4) Faulty heater-A/C Control.

DIAGNOSIS AND TESTING - A/C PERFORMANCE TEST

The air conditioning system is designed to remove heat and humidity from the air entering the passenger compartment. The evaporator, located in the heater-A/C unit, is cooled to temperatures near the freezing point. As warm damp air passes over the fins in the evaporator, moisture in the air condenses to water, dehumidifying the air. Condensation on the evaporator fins reduces the evaporators ability to absorb heat. During periods of high heat and humidity, an air conditioning system will be less effective. With the instrument control set to RECIRC, only air from the passenger compartment passes through the evaporator. As the passenger compartment air dehumidifies, A/C performance levels rise.

PERFORMANCE TEST PROCEDURE

Review Safety Precautions and Warnings in this group before performing (Refer to 24 - HEATING & AIR CONDITIONING - DESCRIPTION) this procedure. Air temperature in test room and on vehicle must be 21° C (70°F) minimum for this test.

NOTE: When connecting the service equipment coupling to the line fitting, verify that the valve of the coupling is fully closed. This will reduce the amount of effort required to make the connection.

(1) Connect a tachometer and manifold gauge set.
(2) Set control to A/C, RECIRC, and PANEL, temperature lever on full cool and blower on high.
(3) Start engine and hold at 1000 rpm with A/C clutch engaged.
(4) Engine should be warmed up with doors closed and windows open.
(5) Insert a thermometer in the left center A/C panel outlet and operate the engine for five minutes. The A/C clutch may cycle depending on ambient conditions. If the clutch cycles, unplug the low pressure cycling clutch switch wire harness connector from the switch located on the accumulator. Place a jumper wire across the terminals of the low pressure cycling clutch switch wire harness connector.
(6) With the A/C clutch engaged, compare the discharge air temperature to the A/C Performance Temperatures charts.
(7) If the discharge air temperature fails to meet the specifications in the performance temperature charts.(Refer to 24 - HEATING & AIR CONDITIONING - STANDARD PROCEDURE) for further diagnosis.

HEATING & AIR COND. - RHD (Continued)

A/C PERFORMANCE TEMPERATURES- (NON-TURBO ENGINES ONLY)

Ambient Temperature	21°C (70°F)	27°C (80°F)	32°C (90°F)	38°C (100°F)	43°C (110°F)
Air Temperature at Center Panel Outlet	-2 - 6°C (29-42°F)	2-10°C (37-49°F)	7-15°C (45-58°F)	11-19°C (52-65°F)	15-23°C (59-72°F)
Compressor Discharge Pressure	999-1206 kPa (145-175 PSI)	1033-1378 kPa (150-200 PSI	1240-1757 kPa (180-255 PSI)	1584-2136 kPa (230-310 PSI)	2067-2722 kPa (300-395 PSI)
Accumulator Out Pressure at Service Port	122-221 kPa (18-32 PSI)	137-235 kPa (20-34 PSI)	186-290 kpa (27-42 PSI)	220-324 kpa (32-47 PSI)	275-379 kPa (40-55 PSI)

A/C PERFORMANCE TEMPERATURES- (2.4L TURBO ENGINE ONLY)

Ambient Temperature	21°C (70°F)	27°C (80°F)	32°C (90°F)	38°C (100°F)	43°C (110°F)
Air Temperature at Center Panel Outlet	6 - 16°C (43-60°F)	11-21°C (52-69°F)	16-25°C (60-76°F)	17-28°C (63-83°F)	19-32°C (67-89°F)
Compressor Discharge Pressure	1139-1795 kPa (165-260 PSI)	1828-2070 kPa (265-300 PSI	1932-2070 kPa (280-300 PSI)	1932-2484 kPa (280-360 PSI)	2104-2898 kPa (305-420 PSI)
Accumulator Out Pressure at Service Port	195-319 kPa (28-46 PSI)	257-381 kPa (37-55 PSI)	312-443 kpa (45-64 PSI)	332-512 kpa (48-74 PSI)	360-581 kPa (52-84 PSI)

STANDARD PROCEDURE

STANDARD PROCEDURE - HANDLING TUBING AND FITTINGS

Kinks in the refrigerant tubing or sharp bends in the refrigerant hose lines will greatly reduce the capacity of the entire system. High pressures are produced in the system when it is operating. Extreme care must be exercised to make sure that all connections are pressure tight. Dirt and moisture can enter the system when it is opened for repair or replacement of lines or components. The refrigerant oil will absorb moisture readily out of the air. This moisture will convert into acids within a closed system.

CAUTION: The system must be completely empty before opening any fitting or connection in the refrigeration system. Open fittings with caution even after the system has been emptied. If any pressure is noticed as a fitting is loosened, retighten fitting and evacuate the system again.

A good rule for the flexible hose lines is to keep the radius of all bends at least 10 times the diameter of the hose. Sharper bends will reduce the flow of refrigerant. The flexible hose lines should be routed so they are at least 3 inches (80 mm) from the exhaust manifold. Inspect all flexible hose lines to make sure they are in good condition and properly routed.

The use of correct wrenches when making connections is very important. Improper wrenches or improper use of wrenches can damage the fittings. The internal parts of the A/C system will remain stable as long as moisture-free refrigerant and refrigerant oil is used. Abnormal amounts of dirt, moisture or air can upset the chemical stability. This may cause operational troubles or even serious damage if present in more than very small quantities.

When opening a refrigeration system, have everything you will need to repair the system ready. This will minimize the amount of time the system must be opened. Cap or plug all lines and fittings as soon as they are opened. This will help prevent the entrance of dirt and moisture. All new lines and components should be capped or sealed until they are ready to be used.

All tools, including the refrigerant dispensing manifold, the manifold gauge set, and test hoses should be kept clean and dry.

STANDARD PROCEDURE - SYSTEM CHARGE LEVEL TEST

The procedure below should be used to check and/or fill the refrigerant charge in the air conditioning system.

HEATING & AIR COND. - RHD (Continued)

WARNING: AVOID BREATHING A/C REFRIGERANT AND LUBRICANT VAPOR OR MIST. EXPOSURE MAY IRRITATE EYES, NOSE AND THROAT. USE ONLY APPROVED SERVICE EQUIPMENT MEETING SAE REQUIREMENTS TO DISCHARGE R-134a SYSTEM. IF ACCIDENTAL SYSTEM DISCHARGE OCCURS, VENTILATE WORK AREA BEFORE RESUMING SERVICE.
R-134a SERVICE EQUIPMENT OR VEHICLE A/C SYSTEM SHOULD NOT BE PRESSURE TESTED OR LEAK TESTED WITH COMPRESSED AIR. MIXTURE OF AIR and R-134a CAN BE COMBUSTIBLE AT ELEVATED PRESSURES. THESE MIXTURES ARE POTENTIALLY DANGEROUS AND MAY RESULT IN FIRE OR EXPLOSION CAUSING INJURY OR PROPERTY DAMAGE.

NOTE: Refer to the underhood HVAC specification tag for the proper charge level.

It is recommended to use the gauges or reclaim/recycle equipment.

(1) Use a manifold gauge and check the liquid line pressure.

(2) Attach a clamp-on thermocouple to the liquid line near the filter/drier.

(3) The vehicle must be in the following modes:

- Automatic transaxle in park or manual transaxle in neutral.
- Engine at idle
- A/C controls set to outside air
- Panel mode
- A/C ON full cool
- Blower motor ON high speed
- Vehicle windows closed

(4) Operate system for a couple of minutes to allow the system to stabilize.

(5) Observe filter/drier pressure and Liquid line temperature. Using the Charge Determination Chart (Fig. 1) determine where the system is currently operating. If the system is not in the proper range, reclaim all the refrigerant and recharge per A/C label.

STANDARD PROCEDURE - EVACUATING REFRIGERANT SYSTEM

NOTE: Special effort must be used to prevent moisture from entering the A/C system oil. Moisture in the oil is very difficult to remove and will cause a reliability problem with the compressor.

If a compressor designed to use R-134a refrigerant is left open to the atmosphere for an extended period of time. It is recommended that the refrigerant oil be drained and replaced with new oil or a new compressor be used. This will eliminate the possibility of contaminating the refrigerant system.

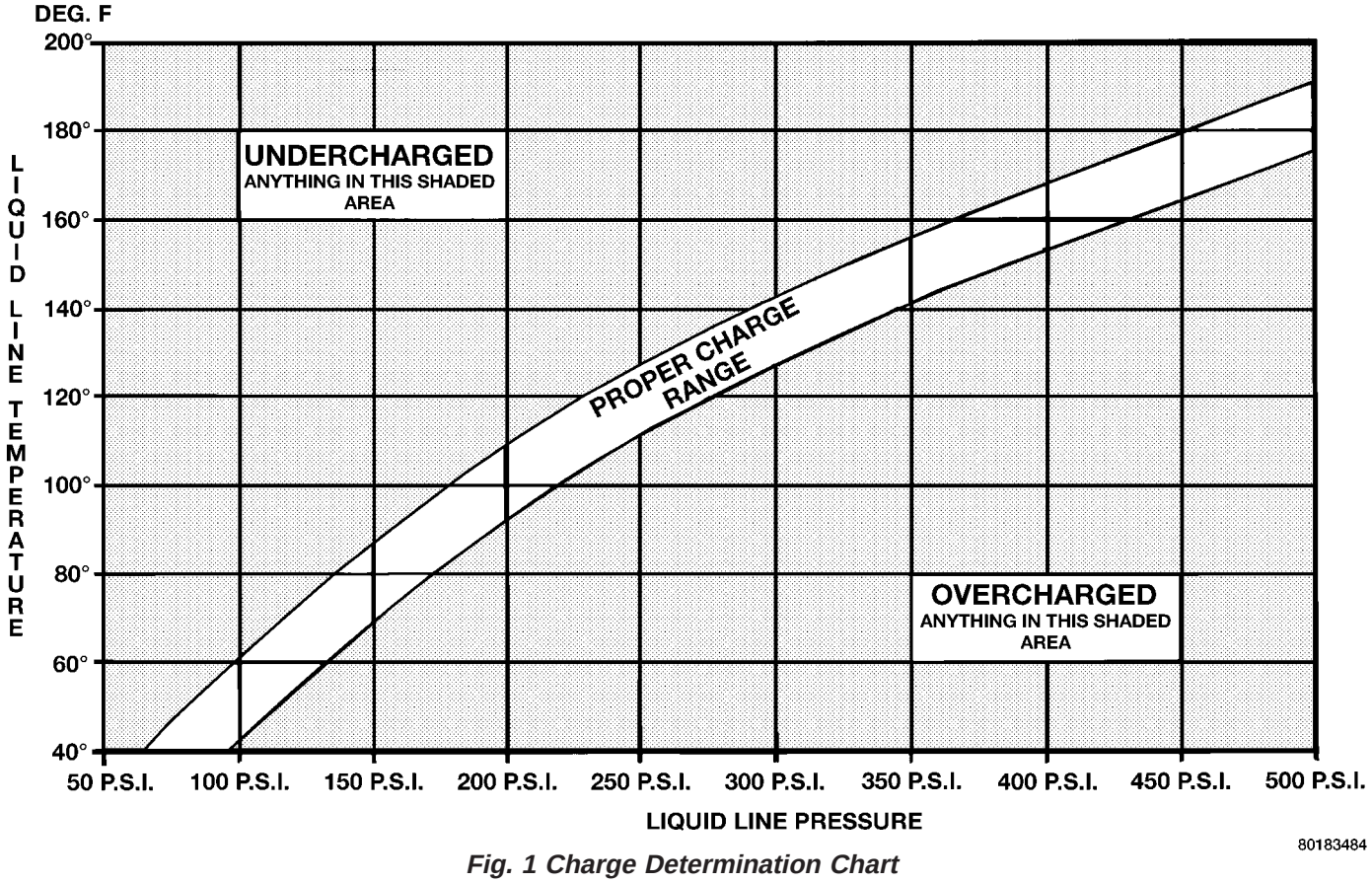

Fig. 1 Charge Determination Chart

HEATING & AIR COND. - RHD (Continued)

If the refrigerant system has been open to the atmosphere, it must be evacuated before the system can be filled. Moisture and air mixed with the refrigerant will raise the compressor head pressure above acceptable operating levels. This will reduce the performance of the air conditioner and damage the compressor. Moisture will boil at near room temperature when exposed to vacuum. To evacuate the refrigerant system:

NOTE: When connecting the service equipment coupling to the line fitting, verify that the valve of the coupling is fully closed. This will reduce the amount of effort required to make the connection.

(1) Connect a suitable charging station, refrigerant recovery machine or a manifold gauge set with vacuum pump and refrigerant recovery equipment.

(2) Open the suction and discharge valves and start the vacuum pump. The vacuum pump should run a minimum of 45 minutes prior to charge to eliminate all moisture in system. When the suction gauge reads -88 kPa (- 26 in. Hg) vacuum or greater for 30 minutes, close all valves and turn off vacuum pump. If the system fails to reach specified vacuum, the refrigerant system likely has a leak that must be corrected. If the refrigerant system maintains specified vacuum for at least 30 minutes, start the vacuum pump, open the suction and discharge valves. Then allow the system to evacuate an additional 10 minutes.

(3) Close all valves. Turn off and disconnect the vacuum pump.

(4) The refrigerant system is prepared to be charged with refrigerant.

STANDARD PROCEDURE - CHARGING A/C SYSTEM

PARTIAL CHARGE

This vehicle does not have a sight glass. It is not possible to determine the amount of (R-134a) charge in the system. Therefore it is necessary to completely evacuate and recover the system, and then recharge the system fully.

EVACUATION

Before adding refrigerant, all air must be evacuated from the system.

NOTE: Use the High Side service port on the discharge line at the compressor and the low side service port at the filter drier to attach your service equipment. DO NOT use the high side service port on the line next to the filter drier.

- Connect a manifold gauge set to the A/C service ports (Fig. 2), (Fig. 3) or (Fig. 4).
- Use a vacuum pump or charging station and evacuate system to 95 kPa (28 inches Hg) for 30 minutes.
- Go to Charging A/C System below.

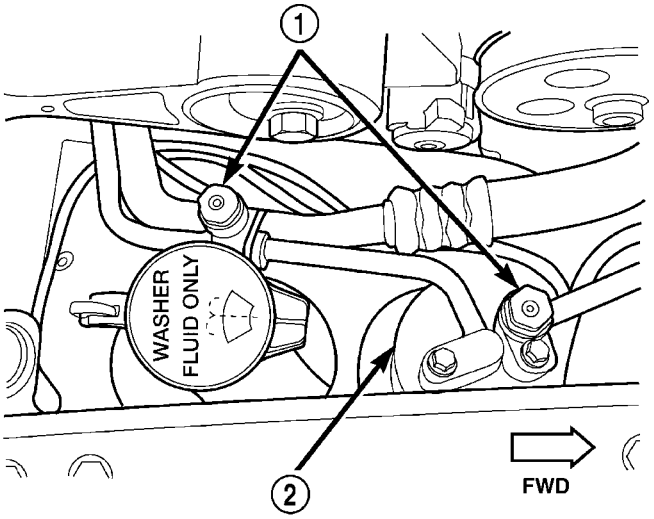

Fig. 2 A/C Service Ports

1 - A/C SERVICE PORTS
2 - FILTER/DRIER

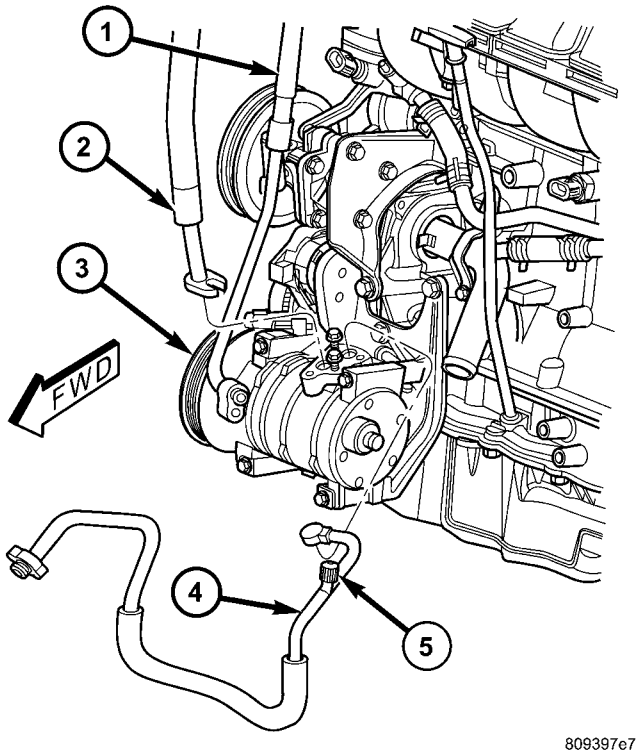

Fig. 3 A/C Refrigerant Lines - Compressor

1 - LIQUID LINE
2 - SUCTION LINE
3 - COMPRESSOR
4 - DISCHARGE LINE
5 - HIGH SIDE SERVICE PORT

HEATING & AIR COND. - RHD (Continued)

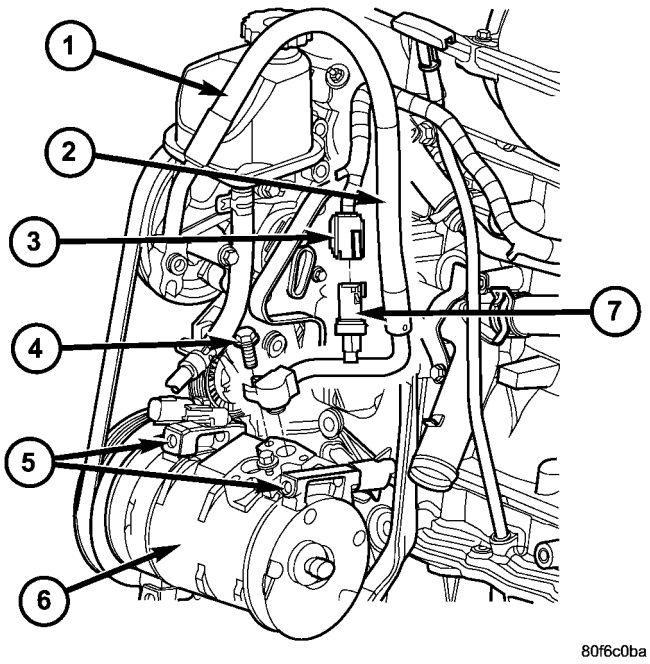

Fig. 4 A/C Compressor Removal/Installation 2.4L Turbo

1 - Power Steering Fluid Tank
2 - A/C Discharge Line
3 - High Pressure Cutoff Switch Electrical Connector
4 - Discharge Line Connection Bolt
5 - A/C Compressor Mounting Bolts (4 total)
6 - A/C Compressor
7 - High Pressure Cutoff Switch / High Side Charging Port

CHARGING A/C SYSTEM

The procedure below should be used to fill the refrigerant charge in the air conditioning system. This A/C system does not have or use a sight glass to check or charge the system.

WARNING: REVIEW SAFETY PRECAUTIONS AND WARNINGS IN THIS GROUP BEFORE CHARGING THE REFRIGERANT SYSTEM.
AVOID BREATHING A/C REFRIGERANT AND LUBRICANT VAPOR OR MIST. EXPOSURE MAY IRRITATE EYES, NOSE AND THROAT. USE ONLY APPROVED SERVICE EQUIPMENT MEETING SAE REQUIREMENTS TO DISCHARGE R-134a SYSTEM. IF ACCIDENTAL SYSTEM DISCHARGE OCCURS, VENTILATE WORK AREA BEFORE RESUMING SERVICE.
R-134a SERVICE EQUIPMENT OR VEHICLE A/C SYSTEM SHOULD NOT BE PRESSURE TESTED OR LEAK TESTED WITH COMPRESSED AIR. MIXTURE OF AIR and R-134a CAN BE COMBUSTIBLE AT ELEVATED PRESSURES. THESE MIXTURES ARE POTENTIALLY DANGEROUS AND MAY RESULT IN FIRE OR EXPLOSION CAUSING INJURY OR PROPERTY DAMAGE.

CAUTION: Do not overcharge refrigerant system, as excessive compressor head pressure can cause noise and system failure.

After the system has been tested for leaks and evacuated, a refrigerant (R-134a) charge can be injected into the system.

NOTE: When connecting the service equipment coupling to the line fitting, verify that the valve of the coupling is fully closed. This will reduce the amount of effort required to make the connection.

(1) If using a separate vacuum pump close all valves before disconnecting pump. Connect manifold gauge set to the A/C service ports (Fig. 2) and (Fig. 3).

NOTE: Please refer to the underhood HVAC Specification sticker for the latest refrigerant fill levels for the vehicle being worked on.

NOTE: On vehicles equipped with the 2.4L Turbo removal of the High Side Pressure Switch may be required depending on your HVAC Charging Equipment. Check your service equipment manual to see if low side only servicing is permitted if not then removal of the switch is required.

(2) Measure refrigerant (refer to capacities). Refer to the instructions provided with the equipment being used.

(3) Verify engine is shut off. Open the suction and discharge valves. Open the charge valve to allow the refrigerant to flow into the system. When the transfer of refrigerant has stopped, close the suction and discharge valve.

(4) If all of the charge did not transfer from the dispensing device, put vehicle controls into the following mode:

- Automatic transaxle in park or manual transaxle in neutral
- Engine idling at 700 rpm
- A/C control set in 100 percent inside air (Recirculation)
- Panel mode
- Blower motor ON high speed
- Vehicle windows closed

If the A/C compressor does not engage, test the compressor clutch control circuit and correct any failure (Refer to 8 - ELECTRICAL/WIRING DIAGRAM INFORMATION - DIAGNOSIS AND TESTING).

(5) Open the suction valve to allow the remaining refrigerant to transfer to the system.

WARNING: TAKE CARE NOT TO OPEN THE DISCHARGE (HIGH-PRESSURE) VALVE AT THIS TIME

HEATING & AIR COND. - RHD (Continued)

(6) Close all valves and test the A/C system performance.

(7) Disconnect the charging station or manifold gauge set. Install the service port caps.

STANDARD PROCEDURE - SYSTEM LEAK CHECKING

WARNING: R-134a SERVICE EQUIPMENT OR VEHICLE A/C SYSTEM SHOULD NOT BE PRESSURE TESTED OR LEAK TESTED WITH COMPRESSED AIR. MIXTURE OF AIR and R-134a CAN BE COMBUSTIBLE AT ELEVATED PRESSURES. THESE MIXTURES ARE POTENTIALLY DANGEROUS AND MAY RESULT IN FIRE OR EXPLOSION CAUSING INJURY OR PROPERTY DAMAGE.
AVOID BREATHING A/C REFRIGERANT AND LUBRICANT VAPOR OR MIST. EXPOSURE MAY IRRITATE EYES, NOSE AND THROAT. USE ONLY APPROVED SERVICE EQUIPMENT MEETING SAE REQUIREMENTS TO DISCHARGE R-134a SYSTEM. IF ACCIDENTAL SYSTEM DISCHARGE OCCURS, VENTILATE WORK AREA BEFORE RESUMING SERVICE.

NOTE: The refrigerant system does come from the factory with a yellow tracer dye already installed to aid in detection of leaks.

If the A/C system is not cooling properly, determine if the refrigerant system is fully charged with R-134a. This is accomplished by performing a system Charge Level-Check or Fill. If while performing this test A/C liquid line pressure is less than 345 kPa (50 psi) proceed to Empty Refrigerant System Leak Test. If liquid line pressure is greater than 345 kPa (50 psi) proceed to low refrigerant level leak test. If the refrigerant system is empty or low in refrigerant charge, a leak at any line fitting or component seal is likely. A review of the fittings, lines and components for oily residue is an indication of the leak location. To detect a leak in the refrigerant system, perform one of the following procedures as indicated by the symptoms.

EMPTY REFRIGERANT SYSTEM LEAK TEST

(1) Evacuate the refrigerant system to the lowest degree of vacuum possible (approx. 28 in Hg.). Determine if the system holds a vacuum for 15 minutes. If vacuum is held, a leak is probably not present. If system will not maintain vacuum level, proceed with this procedure.

(2) Prepare a .284 Kg. (10 oz.) refrigerant charge to be injected into the system.

(3) Connect and dispense .284 Kg. (10 oz.) of refrigerant into the evacuated refrigerant system.

(4) Proceed to Step 2 of Low Refrigerant Level Leak Test.

LOW REFRIGERANT LEVEL LEAK TEST

(1) Determine if there is any (R-134a) refrigerant in the system.

(2) Position the vehicle in a wind free work area. This will aid in detecting small leaks.

(3) Bring the refrigerant system up to operating temperature and pressure. This is done by allowing the engine to run for five minutes with the system set to the following:

- Transaxle in Park or neutral with parking brake set
- Engine Idling at 700 rpm
- A/C Controls Set in 100 percent outside air
- Blower switch in the high A/C position
- A/C in the ON position
- Open all windows

CAUTION: A leak detector designed for R-12 refrigerant (only) will not detect leaks in a R-134a refrigerant system.

(4) Shut off the vehicle and wait 2 to 7 minutes. Then use an Electronic Leak Detector that is designed to detect R-134a type refrigerant and search for leaks. Fittings, lines, or components that appear to be oily usually indicates a refrigerant leak. To inspect the evaporator core for leaks, insert the leak detector probe into the drain tube opening or a heat duct. A R-134a dye is available to aid in leak detection, use only Daimler-Chrysler approved refrigerant dye.

If a thorough leak check has been completed without indication of a leak, proceed to System Charge Level.

STANDARD PROCEDURE - REFRIGERANT RECOVERY

WARNING: REVIEW THE WARNINGS AND CAUTIONS IN THE FRONT OF THIS GROUP BEFORE PERFORMING THE FOLLOWING OPERATION.

A R-134a refrigerant recovery/recycling/charging station that meets SAE Standard J2210 must be used to recover the refrigerant from an R-134a refrigerant system. See the operating instructions supplied by the equipement manufacturer for the proper care and use of this equipment.

HEATING & AIR COND. - RHD (Continued)

SPECIFICATIONS

A/C APPLICATION TABLE

Item	Description	Notes
Vehicle	PT- PT Crusier	
System	expansion valve	
Total Refrigerant Capacity	R134a	Refer to underhood HVAC specification tag.
Total Oil Capacity	ND-8 PAG oil	180 ml / 6.10 oz
Compressor	Nippondenso 10S17 - Auto Trans Nippondenso 10S15 - Man Trans	
Freeze-up Control	Low pressure clutch cycling switch	Input to PCM, accumulator mounted, cycles clutch off below 34° F, cycles back on above 45° F
Low psi Control	Low pressure clutch cycling switch	Accumulator mounted, opens < 22 ± 1 psi, resets > 39 ± 1 psi
High psi Control	High pressure switch	Compressor mounted switch, Opens > 470 psi, resets < 370 - 330 psi
Control head	Manual type	
Mode Door	Cable	
Blend Air Door	Cable	
Fresh/Recirc door	Vacuum actuator	
Blower Motor	Control head switched	Resistor block
Cooling Fan	Variable speed	PCM controlled ISO solid state fan relay
Clutch		
Control	Relay	PCM
Draw	2.5 amps @ 12V	± 0.5V @ 70° F
Gap	0.014″ - 0.026″	
DRB III®		
Reads	TPS, RPM, A/C switch test, fin sensor A/C & fan relays	
Actuators	Fan & clutch relays	

HEATING & AIR COND. - RHD (Continued)

TORQUE

TORQUE SPECIFICATIONS

DESCRIPTION	N·m	Ft. Lbs.	In. Lbs.
A/C Compressor Shaft Bolt	17.5 (± 2)	12.9 (± 1.5)	155 (± 2)
A/C Compressor Mounting Bolts	28.3	20.7	250
A/C Compressor Lines	12.2	9.0	108
A/C Condensor Lines	5	3.7	45
A/C Housing Retaining Fasteners	20	14.8	177
Expansion Valve bolt	11	8.1	97
A/C Line Retainer bolt	23	16.9	203

A/C COMPRESSOR CLUTCH RELAY

DESCRIPTION

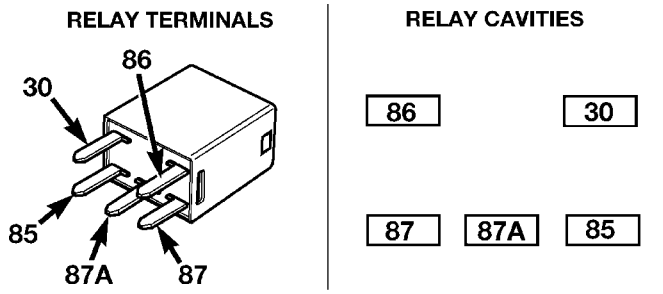

Fig. 5 A/C Compressor Clutch Relay

TERMINAL LEGEND	
NUMBER	IDENTIFICATION
30	COMMON FEED
85	COIL GROUND
86	COIL BATTERY
87	NORMALLY OPEN
87A	NORMALLY CLOSED

The A/C compressor clutch relay (Fig. 5) is a International Standards Organization (ISO) micro-relay. Relays conforming to the ISO specifications have common physical dimensions, current capacities, terminal patterns, and terminal functions. The ISO micro-relay terminal functions are the same as a conventional ISO relay. However, the ISO micro-relay terminal pattern (or footprint) is different, the current capacity is lower, and the physical dimensions are smaller than those of the conventional ISO relay. The A/C compressor clutch relay is located in the Power Distribution Center (PDC) in the engine compartment. See the fuse and relay layout label affixed to the inside surface of the PDC cover for A/C compressor clutch relay identification and location.

The black, molded plastic case is the most visible component of the A/C compressor clutch relay. Five male spade-type terminals extend from the bottom of the base to connect the relay to the vehicle electrical system, and the ISO designation for each terminal is molded into the base adjacent to each terminal. The ISO terminal designations are as follows:

- **30 (Common Feed)** - This terminal is connected to the movable contact point of the relay.
- **85 (Coil Ground)** - This terminal is connected to the ground feed side of the relay control coil.
- **86 (Coil Battery)** - This terminal is connected to the battery feed side of the relay control coil.
- **87 (Normally Open)** - This terminal is connected to the normally open fixed contact point of the relay.
- **87A (Normally Closed)** - This terminal is connected to the normally closed fixed contact point of the relay.

The factory-installed A/C compressor clutch relay cannot be adjusted or repaired. If the relay is damaged or faulty, it must be replaced.

A/C COMPRESSOR CLUTCH RELAY (Continued)

OPERATION

The A/C compressor clutch relay is an electromechanical switch that uses a low current input from the Powertrain Control Module (PCM) to control the high current output to the Compressor clutch electromagnetic coil. The movable common feed contact point is held against the fixed normally closed contact point by spring pressure. When the relay coil is energized, an electromagnetic field is produced by the coil windings. This electromagnetic field draws the movable relay contact point away from the fixed normally closed contact point, and holds it against the fixed normally open contact point. When the relay coil is de-energized, spring pressure returns the movable contact point back against the fixed normally closed contact point. The resistor or diode is connected in parallel with the relay coil in the relay, and helps to dissipate voltage spikes and electromagnetic interference that can be generated as the electromagnetic field of the relay coil collapses.

The A/C compressor clutch relay terminals are connected to the vehicle electrical system through a receptacle in the PDC. The inputs and outputs of the A/C compressor clutch relay include:

- The common feed terminal (30) receives a battery current input from a fuse in the PDC through a fused B(+) circuit at all times.
- The coil ground terminal (85) receives a ground input from the PCM through the A/C compressor clutch relay control circuit only when the PCM electronically pulls the control circuit to ground.
- The coil battery terminal (86) receives a battery current input from a fuse in the fuse block module through a fused ignition switch output (run-start) circuit only when the ignition switch is in the On or Start positions.
- The normally open terminal (87) provides a battery current output to the compressor clutch coil through the A/C compressor clutch relay output circuit only when the A/C compressor clutch relay coil is energized.
- The normally closed terminal (87A) is not connected to any circuit in this application, but provides a battery current output only when the A/C compressor clutch relay coil is de-energized.

Refer to the appropriate wiring information for complete air conditioning-heater wiring diagrams.

REMOVAL

(1) Disconnect and isolate the battery negative cable.

(2) Remove the cover from the Power Distribution Center (PDC) (Fig. 6).

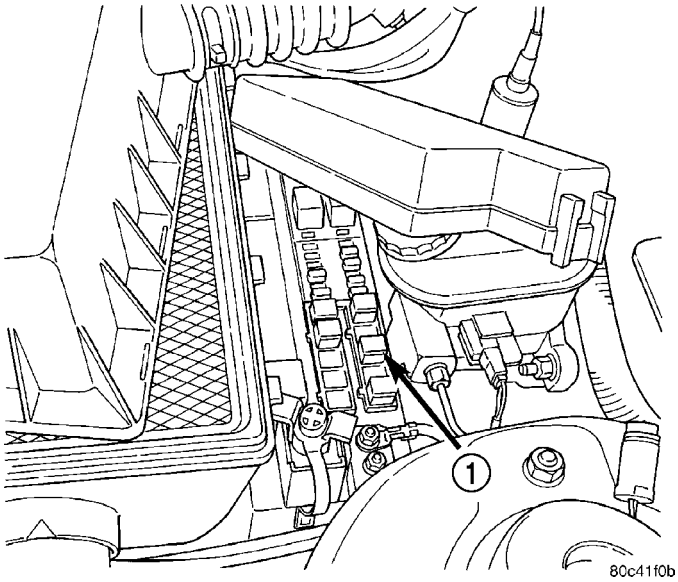

Fig. 6 Power Distribution Center (PDC)

1 - PDC

(3) See the fuse and relay layout label affixed to the underside of the PDC cover for A/C compressor clutch relay identification and location.

(4) Remove the A/C compressor clutch relay from the PDC.

INSTALLATION

(1) See the fuse and relay layout label affixed to the underside of the PDC cover for the proper A/C compressor clutch relay location.

(2) Position the A/C compressor clutch relay in the proper receptacle in the PDC.

(3) Align the A/C compressor clutch relay terminals with the terminal cavities in the PDC receptacle.

(4) Push down firmly on the A/C compressor clutch relay until the terminals are fully seated in the terminal cavities in the PDC receptacle.

(5) Install the cover onto the PDC.

(6) Reconnect the battery negative cable.

A/C HEATER CONTROL

DESCRIPTION

Both the heater-only and heater-A/C systems use a combination of electrical, cable and vacuum controls. These controls provide the vehicle operator with a number of setting options to help control the climate and comfort within the vehicle. Refer to the owner's manual in the vehicle glove box for more information on the features, use, and suggested operation of these controls.

The heater-only or heater-A/C control panel is located to the right of the instrument cluster on the instrument panel. The control panel contains rotary-type knobs. There is a blower motor speed switch, mode control switch, temperature control and airflow control.

The heater-only or heater-A/C control panel cannot be repaired. If faulty or damaged, the entire unit must be replaced. The control knobs and the illumination lamps are available for service replacement.

DIAGNOSIS AND TESTING - VACUUM CONTROL SYSTEM

Use an adjustable vacuum test set (Special Tool C-3707-B) and a suitable vacuum pump to test the heater-A/C vacuum control system. With a finger placed over the end of the vacuum test hose probe (Fig. 7), adjust the bleed valve on the test set gauge to obtain a vacuum of exactly 27 kPa (8 in. Hg.). Release and block the end of the probe several times to verify that the vacuum reading returns to the exact 27 kPa (8 in. Hg.) setting. Otherwise, a false reading will be obtained during testing.

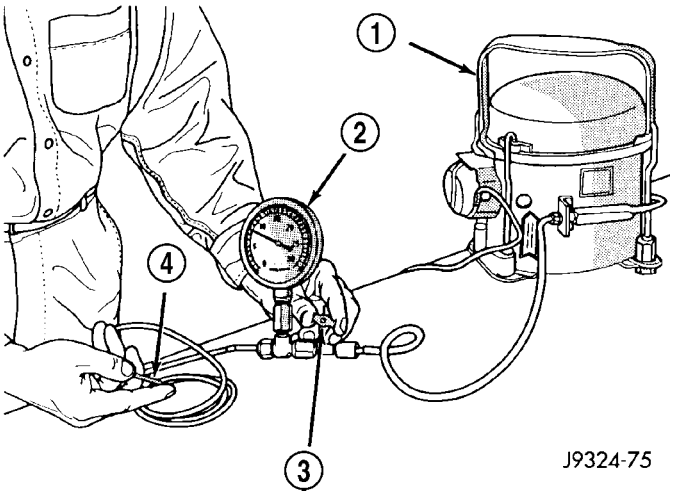

Fig. 7 ADJUST VACUUM TEST BLEED VALVE

1 - VACUUM PUMP TOOL C-4289
2 - VACUUM TEST SET C-3707
3 - BLEED VALVE
4 - PROBE

HEATER-A/C VACUUM SYSTEM DIAGNOSIS

CONDITION	POSSIBLE CAUSES	CORRECTION
NO FORCED AIR IN HEAT POSITION	1. Vacuum line pinched or leaking. 2. Faulty heat defroster or mode door. 3. Faulty selector switch. 4. Vacuum check valve.	1. Locate and repair vacuum leak or pinched line. 2. Test actuators and door operation. Repair as necassary. 3. Test selector switch and replace if necessary. 4. Test check valve and replace if necessary.
NO FORCED AIR IN PANEL POSITION	1. Vacuum line pinched or leaking. 2. Faulty mode door. 3. Faulty selector switch. 4. Vacuum check valve.	1. Locate and repair vacuum leak or pinched line. 2. Test actuator and door operation. Repair as necessary. 3. Test selector switch and replace if necessary. 4. Test check valve and replace if necessary.
NO FORCED AIR IN DEFROST POSITION	1. Vacuum line pinched or leaking. 2. Faulty heat , defroster, or mode door. 3. Faulty selector switch. 4. Vacuum check valve.	1. Locate and repair vacuum leak or pinched line. 2. Test actuators and door operation. Repair as necessary. 3. Test selector switch and replace if necessary. 4. Test check valve and replace if necessary.

A/C HEATER CONTROL (Continued)

ONE-WAY CHECK VALVE

(1) Disconnect the heater-A/C vacuum supply (Black) tube in the engine compartment. This tube passes through an opening in the dash panel.

(2) Remove the one-way vacuum check valve. The valve is located on the (Black) vacuum supply hose at the brake power booster.

(3) Connect the test set vacuum supply hose to the heater side of the valve. When connected to this side of the check valve, no vacuum should pass and the test set gauge should return to the 27 kPa (8 in. Hg.) setting. If OK, go to step Step 4. If not OK, replace the faulty valve.

(4) Connect the test set vacuum supply hose to the engine vacuum side of the valve. When connected to this side of the check valve, vacuum should flow through the valve without restriction. If not OK, replace the faulty valve.

HEATER-A/C CONTROLS

The operation of the Circulation door can be viewed by removing the blower motor and looking up into the unit inlet. (Refer to 24 - HEATING & AIR CONDITIONING/DISTRIBUTION/BLOWER MOTOR - REMOVAL) for service procedures.

(1) Connect the test set vacuum probe to the heater-A/C vacuum supply (Black) hose in the engine compartment. Position the test set gauge so that it can be viewed from the passenger compartment.

(2) Start with the Mode control in the Panel position and the Circulation control in the Outside-air position.

(3) Move the Circulation control to the Recirculation position (the Circulation door should move into the Recirculation position). After a short pause move the Mode control to the Defrost position (the Circulation door should move to the Outside-air position). The test gauge should return to the calibrated setting of 27 kPa (8 in. Hg.) after each selection is made. If the gauge cannot achieve the calibrated setting, the vacuum circuit or a component has a leak.

(4) If the gauge achieves the calibrated setting but the door does not move, there is either a pinched vacuum line or a failed actuator.

LOCATING VACUUM LEAKS

(1) Connect the test vacuum probe to the vehicles (Black) supply hose. Position the vacuum test gauge so it can be viewed from the passenger compartment.

(2) Place the Mode in the Panel position and the Circulation control in the Recirculation position.

(3) Remove the center instrument panel bezel.

(4) Remove the center vent duct.

(5) Remove and block the Supply (Black) vacuum line at the control. The test gauge should return to the calibrated setting of 27 kPa (8 in. Hg). If not, there is a leak in the Supply line.

(6) If there is no leak in the Supply line, reconnect it to the Control and remove the Actuator Feed (Red) line from the Control. Block the vacuum connection on the Control from where the line was removed. The test gauge should return to the calibrated setting of 27 kPa (8 in. Hg.). If not, there is a leak in the Control.

(7) If there is no leak in the Supply line or the Control, reconnect the Actuator Feed (Red) line to the control. Remove and block the Actuator Feed (Red) line at the Actuator. The actuator vacuum port is accessible behind and above the Glove Box. The test gauge should return to the calibrated setting of 27 kPa (8 in. Hg.). If not there is a leak in the Actuator Feed line.

(8) If there is no leak in the Supply line, Control, or the Actuator Feed line, the leak must be in the Actuator itself. Connect the Vacuum hose from the Vacuum Test Gauge directly to the Actuator to verify the leak.

LOCATING PINCHED VACUUM LINES

The operation of the Circulation door can be viewed by removing the blower motor and looking up into the unit inlet. See Blower Motor Wheel and Assembly removal and installation in this section for service procedures(Refer to 24 - HEATING & AIR CONDITIONING/DISTRIBUTION/BLOWER MOTOR - REMOVAL) and (Refer to 24 - HEATING & AIR CONDITIONING/DISTRIBUTION/BLOWER MOTOR - INSTALLATION).

(1) Connect the test vacuum probe to the vehicles (Black) supply hose. Position the vacuum test gauge so it can be viewed from the passenger compartment.

(2) Place the Mode in the Panel position and the Circulation control in the Recirculation position.

(3) Remove the center instrument panel bezel.

(4) Remove the center vent duct.

(5) Remove the Supply (Black) vacuum line at the control. The test gauge should drop indicating free flow through the Supply line. If not, there is a blockage in the Supply line.

(6) If there is no blockage in the Supply line, reconnect it to the Control. Remove the Actuator Feed (Red) line from the Control. The test gauge should drop indicating free flow through the Supply line and Control. If not the vacuum switches on the Control are not functioning.

(7) If there is no blockage in the Supply line or the Control, reconnect the Actuator Feed (Red) line to the control. Remove the Actuator Feed (Red) line at the Actuator. The Actuator vacuum port is accessible behind and above the Glove Box. The test gauge should drop indicating free flow through the supply

A/C HEATER CONTROL (Continued)

line, Control, and the Actuator Feed line. If not, there is a blockage in the Actuator Feed line.

(8) If there is no blockage in the Supply line, Control, or the Actuator Feed line, the Actuator must have failed. Connect the Vacuum hose from the Vacuum Test Gauge directly to the Actuator to verify the Actuator has failed.

REMOVAL

(1) Remove the instrument panel center stack bezel(Refer to 23 - BODY/INSTRUMENT PANEL/INSTRUMENT PANEL CENTER BEZEL - REMOVAL) (Fig. 8).

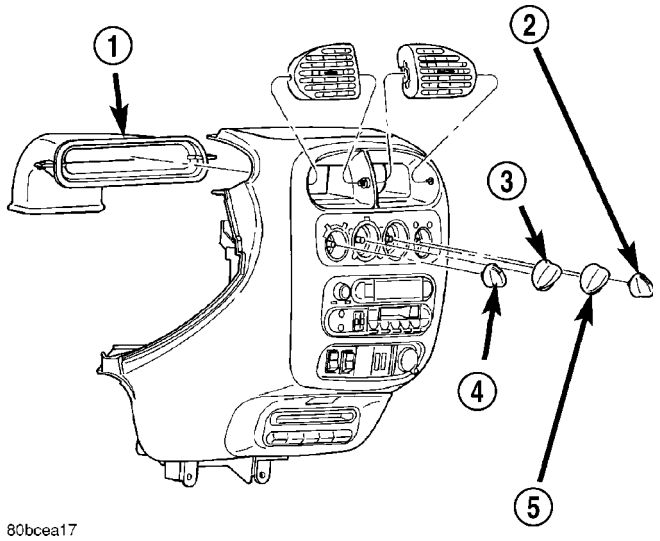

Fig. 8 A/C Outlet Louvers

1 - INSTRUMENT PANEL CENTER AIR DUCT
2 - OUTSIDE AIR/RECIRC CONTROL KNOB
3 - MODE CONTROL KNOB
4 - BLOWER SPEED KNOB
5 - TEMPERATURE CONTROL KNOB

(2) Remove the center air duct (Fig. 9).

(3) Remove the heater-A/C control head and disconnect the cable (Fig. 10).

INSTALLATION

(1) Connect the control head cable and install the heater-A/C control head to the dash.

(2) Install the center air duct.

(3) Install the instrument panel center stack bezel-(Refer to 23 - BODY/INSTRUMENT PANEL/INSTRUMENT PANEL CENTER BEZEL - INSTALLATION).

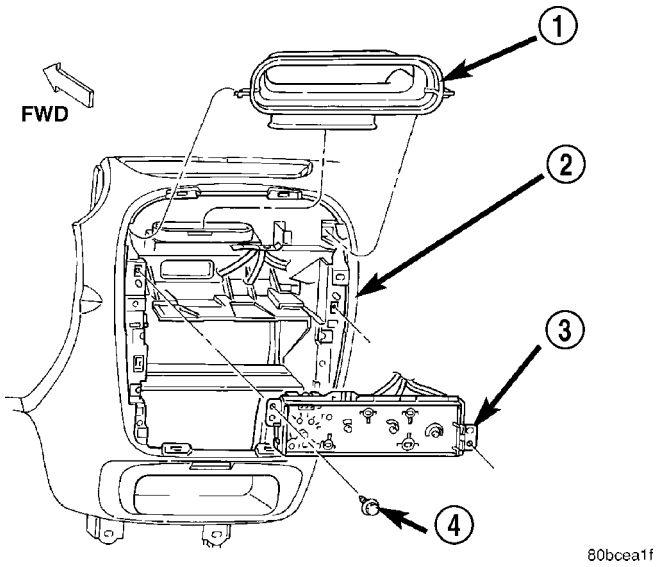

Fig. 9 HVAC CENTER AIR DUCT AND CONTROL HEAD

1 - CENTER AIR DUCT
2 - INSTRUMENT PANEL
3 - HVAC CONTROL HEAD
4 - ATTACHING SCREWS

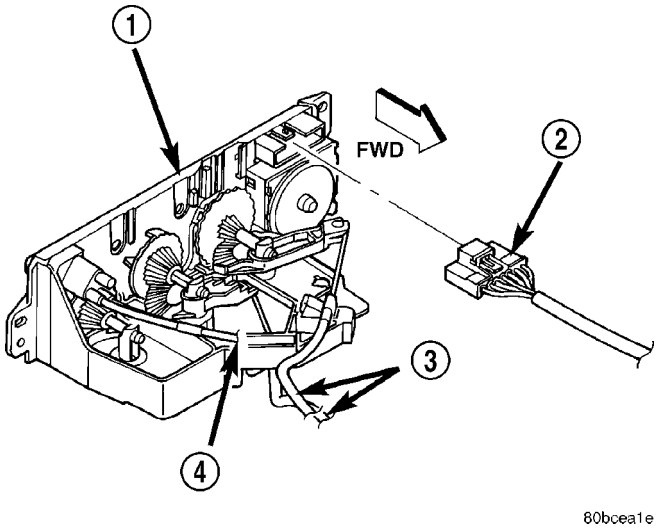

Fig. 10 HVAC CONTROL HEAD CABLES

1 - HVAC CONTROL HEAD
2 - ELECTRICAL CONNECTOR
3 - CONTROL CABLES
4 - VACUUM HARNESS

A/C COMPRESSOR CLUTCH COIL

REMOVAL

Compressor assembly must be removed from mounting(Refer to 24 - HEATING & AIR CONDITIONING/PLUMBING/A/C COMPRESSOR - REMOVAL). Although, refrigerant discharge is not necessary.

(1) Remove the compressor shaft bolt (Fig. 11). A band type oil filter removal tool can be placed around the clutch plate to aid in bolt removal.

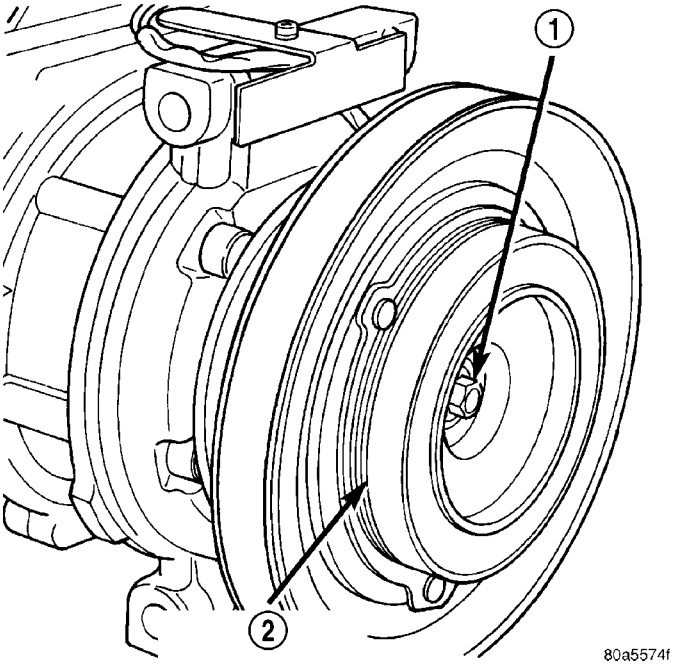

Fig. 11 COMPRESSOR SHAFT BOLT AND CLUTCH PLATE

1 - COMPRESSOR SHAFT BOLT
2 - COMPRESSOR CLUTCH PLATE

(2) Tap the clutch plate with a plastic hammer and remove clutch plate and shim(s) (Fig. 12).

NOTE: Use care not to lose any of the shim(s).

CAUTION:
Do not use screwdrivers between the clutch plate assembly and pulley to remove front plate as this may damage the front plate assembly.

(3) Remove pulley retaining snap ring with Snap Ring Pliers, and slide pulley assembly off of compressor (Fig. 13).

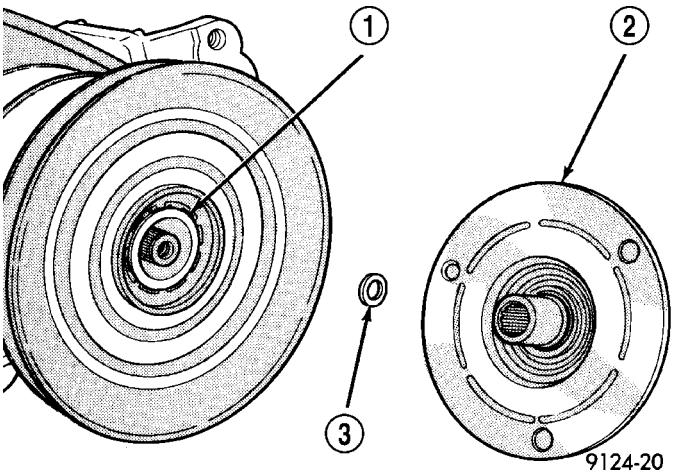

Fig. 12 CLUTCH PLATE AND SHIM(S)

1 - COMPRESSOR SHAFT
2 - CLUTCH PLATE
3 - CLUTCH PLATE SHIM

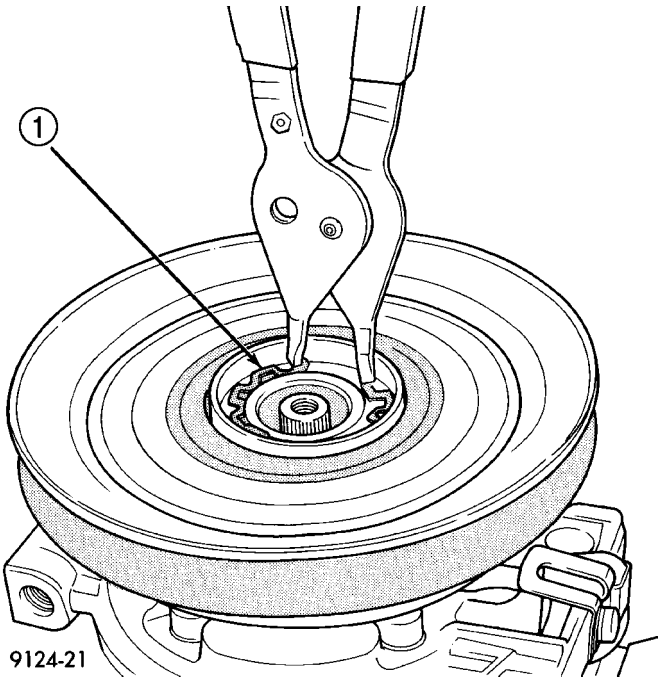

Fig. 13 REMOVING PULLEY SNAP RING

1 - SNAP RING

A/C COMPRESSOR CLUTCH COIL (Continued)

(4) Remove coil wire bracket/ground clip screw and wire harness.

(5) Remove snap ring retaining field coil onto compressor housing (Fig. 14). Slide field coil off of compressor housing.

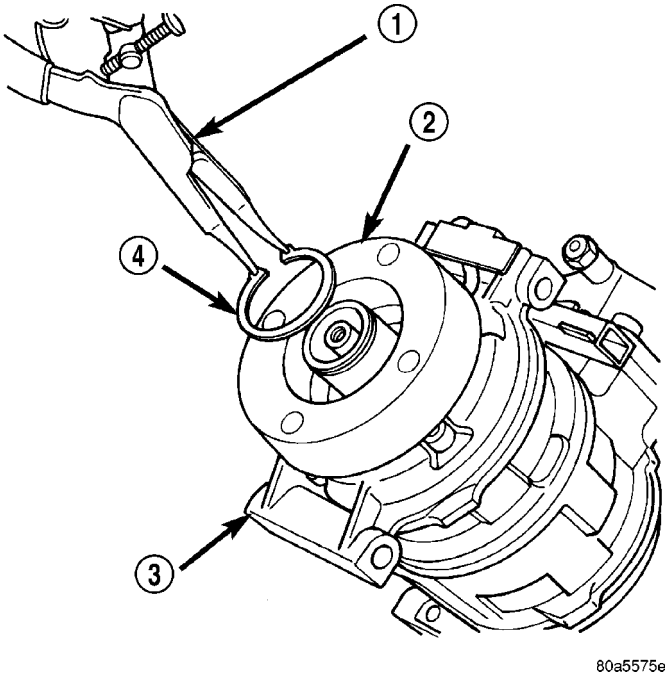

Fig. 14 CLUTCH COIL SNAP RING

1 - SNAP RING PLIERS
2 - CLUTCH COIL
3 - COMPRESSOR
4 - SNAP RING

(6) Examine frictional faces of the clutch pulley and front plate for wear. The pulley and front plate should be replaced if there is excessive wear or scoring. If the friction surfaces are oily, inspect the shaft nose area of the compressor for oil and remove the felt from the front cover. If the compressor felt is saturated with oil, the shaft seal is leaking and will have to be replaced.

(7) Check bearing for roughness or excessive leakage of grease. Replace bearing as required.

INSTALLATION

(1) Align pin in the back of the field coil with hole in compressor end housing, position the field coil into place. Make sure that lead wires are properly routed, and fasten the coil wire bracket/ground retaining screw.

NOTE: A new snap ring must be used. The bevel side of the snap ring must be outward.

(2) Install field coil retaining snap ring with Snap Ring Pliers. Press snap ring to make sure it is properly seated in the groove.

CAUTION:
If snap ring is not fully seated it will vibrate out, resulting in a clutch failure and severe damage to the front face of the compressor.
Do not mar the pulley frictional surface.

(3) Install pulley assembly to compressor. If necessary, tap gently with a block of wood on the friction surface (Fig. 15).

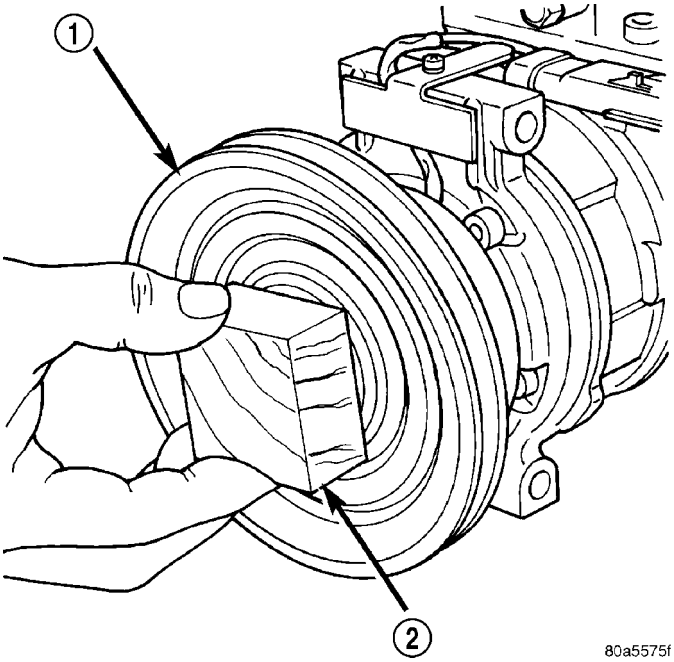

Fig. 15 INSTALLING PULLEY ASSEMBLY

1 - PULLEY ASSEMBLY
2 - WOOD BLOCK

(4) Install pulley assembly retaining snap ring (bevel side outward) with Snap Ring Pliers. Press the snap ring to make sure it is properly seated in the groove.

(5) If the original front plate assembly and pulley assembly are to be reused, the old shim(s) can be used. If not, place a trial stack of shims, 2.54 mm (0.10 in.) thick, on the shaft against the shoulder.

(6) Install front plate assembly onto shaft.

(7) If installing a new front plate and/or pulley assembly, the gap between front plate and pulley face must be checked. Use the following procedure:

(a) Attach a dial indicator to front plate so that movement of the plate can be measured.

(b) With the dial indicator zeroed on the front plate, energize the clutch and record the amount of movement.

(c) The readings should be 0.35 to 0.65 mm (0.014 to 0.026 in.). If proper reading is not obtained, add or subtract shims until desired reading is obtained.

A/C COMPRESSOR CLUTCH COIL (Continued)

(8) Install compressor shaft bolt. Tighten to 17.5 ± 2 N·m (155 ± 20 in. lbs.) torque.

NOTE: Shims may compress after tightening shaft nut. Check air gap in four or more places to verify if air gap is still correct. Spin pulley for final check.

(9) Install the compressor on the engine(Refer to 24 - HEATING & AIR CONDITIONING/PLUMBING/ A/C COMPRESSOR - INSTALLATION).

CLUTCH BREAK-IN

After new clutch installation, cycle the A/C clutch 20 times (5 seconds on and 5 seconds off). During this procedure, set the system to the A/C mode, engine rpm at 1500 - 2000, and high blower speed. This procedure (burnishing) will seat the opposing friction surfaces and provide a higher clutch torque capability.

A/C HIGH PRESSURE SWITCH

DESCRIPTION

The high pressure cut out switch is located on the rear of the compressor. It turns off the compressor if the system pressure exceeds 3240 kPa (470 psi). The high pressure cut out switch is a factory calibrated unit. The switch cannot be adjusted or repaired and if faulty or damaged, it must be replaced.

REMOVAL

WARNING: THE REFRIGERANT MUST BE REMOVED FROM THE SYSTEM BEFORE REMOVING THE HIGH PRESSURE CUT OUT SWITCH.

(1) Recover refrigerant from A/C system (Refer to 24 - HEATING & AIR CONDITIONING - STANDARD PROCEDURE).

(2) Disconnect and isolate the battery negative cable.

(3) Raise and support the vehicle.

(4) Disconnect the engine wire harness connector from the high pressure cut out switch on the compressor back cover (Fig. 16).

(5) Using snap ring pliers, remove the internal snap ring that secures the high pressure cut out switch to the switch port in the compressor back cover.

(6) Pull the high pressure cut out switch out of the compressor back cover.

(7) Install a plug in or tape over the opened switch port on the compressor back cover.

(8) Remove the rubber O-ring seal from the high pressure cut out switch and discard.

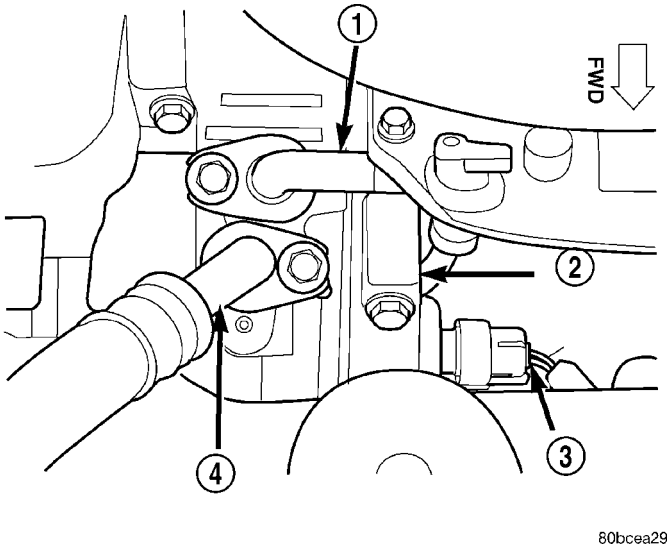

Fig. 16 High Pressure Cut Out Switch Location

1 - DISCHARGE LINE
2 - A/C COMPRESSOR
3 - HIGH PRESSURE CUT OUT SWITCH
4 - SUCTION LINE

INSTALLATION

WARNING: THE REFRIGERANT MUST BE REMOVED FROM THE SYSTEM BEFORE REMOVING THE HIGH PRESSURE CUT OUT SWITCH.

(1) Clean any foreign matter from the switch mounting bore

(2) Install the high pressure cutout switch with a new O-ring. Use only the specified O-rings as they are made of a special material for the R-134a system. Use only refrigerant oil of the type recommended for the compressor in the vehicle.

(3) Remove the tape or plug from the switch port on the compressor back cover.

(4) Insert the high pressure cut out switch into the switch port on the compressor back cover.

(5) Reconnect the engine wire harness connector to the high pressure cut out switch on the compressor back cover..

(6) Lower the vehicle.

(7) Reconnect the battery negative cable.

(8) Evacuate the refrigerant system (Refer to 24 - HEATING & AIR CONDITIONING - STANDARD PROCEDURE).

(9) Recharge the A/C system (Refer to 24 - HEATING & AIR CONDITIONING - STANDARD PROCEDURE).

A/C LOW PRESSURE SWITCH

DESCRIPTION

The A/C low pressure switch is a single pole, single throw, pressure actuated switch that is installed in a threaded port into the suction passage of the accumulator. The switch is located on the top of the accumulator in a fitting that contains a Schrader type valve, which allows the switch to be serviced without discharging the refrigerant system. The accumulator fitting is equipped with a O-ring to seal the switch plumbing connection.

The A/C low pressure switch is a factory calibrated unit. The switch cannot be adjusted or repaired and if faulty or damaged it must be replaced.

OPERATION

The A/C low pressure switch monitors the pressure of the refrigerant leaving the accumulator to the compressor. The switch is connected in series electrically with the heater-A/C control blower and mode switches and the high pressure cut out switch between ground and the Powertrain Control Module (PCM). The switch contact open or close the path the ground, signaling the PCM to turn the compressor clutch on and off. This regulates the refrigerant system pressure and controls evaporator temperature. Controlling the evaporator temperature prevents condensate water on the evaporator fins from freezing and obstructing air conditioning system air flow.

The A/C low pressure switch contacts are open when the suction pressure is approximatly 152 kPa (22 psi) or lower. The switch contacts will close when the suction pressure rises to approximately 234 to 262 kPa (34 to 38 psi) or above. Lower temperatures, below approximately -1° C (30° F), will also cause the switch contacts to open. This is due to the pressure/temperature relationship of the refrigerant in the system.

DIAGNOSIS AND TESTING - A/C LOW PRESSURE CLUTCH CYCLING SWITCH

Before performing diagnosis of the low pressure clutch cycling switch, be certain that the switch is properly installed on the accumulator fitting. If the switch is too loose it may not open the Schrader-type valve in the accumulator fitting, which will prevent the switch from correctly monitoring the refrigerant system pressure.

Also verify that the refrigerant system had the correct refrigerant charge(Refer to 24 - HEATING & AIR CONDITIONING - STANDARD PROCEDURE).

(1) With gear selector in park or neutral and park brake set, start engine and allow to idle.

(2) Raise hood and disconnect low pressure cut off switch connector boot.

(3) Using a suitable jumper wire, jump across the terminals inside wire connector boot.

(4) If the compressor clutch does not engage, the cycling clutch switch, wiring, relay, or fuse can be defective (Refer to 8 - ELECTRICAL/WIRING DIAGRAM INFORMATION - DIAGNOSIS AND TESTING).

(5) If clutch engages, connect manifold gauge set. Read low pressure gauge. At pressure above 97 kPa (14 psi) and above, low pressure out off switch will complete the clutch circuit. If the low pressure gauge reads below 140 kPa (20 psi), the system is low on refrigerant charge or empty due to a leak (Refer to 24 - HEATING & AIR CONDITIONING - STANDARD PROCEDURE).

(6) Install connector boot on switch and repeat Step 3. If the clutch does not engage, replace the low pressure clutch cycling switch.

REMOVAL

NOTE: Note: It is not necessary to discharge the refrigerant system to replace the low pressure cycling switch.

(1) Disconnect and isolate the battery negative cable.

(2) Disconnect the connector for the A/C low pressure switch from the top connector on the accumulator.

(3) Unscrew the A/C low pressure switch from the fitting on the top of the accumulator.

(4) Remove the O-ring seal from the accumulator and discard.

INSTALLATION

NOTE: Replace the O-ring seal before installing the low pressure clutch cycling switch

(1) Lubricate the new O-ring seal with clean refrigerant oil and install it on the accumulator fitting. Use only refrigerant oil of the type recommended for the compressor in the vehicle.

(2) Install and tighten the A/C low pressure switch onto the accumulator fitting. The switch should be hand-tightened onto the accumulator fitting.

(3) Reconnect the wiring harness connector to the A/C low pressure switch.

(4) Reconnect the battery negative cable.

A/C PRESSURE TRANSDUCER

DESCRIPTION

This vehicle is equipped with an a/c pressure transducer. This transducer is screwed onto a fitting on the liquid line between the condenser and the high side refrigerant system service port.

OPERATION

The main function of the a/c pressure transducer is to disengage the compressor clutch when the refrigerant system high pressures are too high. The PCM senses a voltage from the transducer and converts it to a pressure. Based on this pressure, the PCM will disengage the clutch at 460 psi and re-engage the clutch at 290 psi. The a/c heater control also uses the pressure value to operate the auto-recirculation function for improved a/c performance under extreme conditions.

DIAGNOSIS AND TESTING - A/C PRESSURE TRANSDUCER

Before performing diagnosis of the a/c pressure transducer switch, verify that the refrigerant system has the correct refrigerant charge. (Refer to 24 - HEATING & AIR CONDITIONING - DIAGNOSIS AND TESTING)

For circuit descriptions and diagrams, (Refer to Appropriate Wiring Information in Group 8W).

(1) Turn on engine and have a/c selected.

(2) Using the DRB-III monitor and record the pressure value as it is sent out from the PCM.

(3) Connect the high side manifold gauge set to the fitting on the liquid line high side refrigerant system service port.

(4) Compare the DRB-III pressure value to the manifold gauge set reading. The pressure reading from the DRB-III should be similar to the reading of the manifold gauge set value.

(5) If not, replace the a/c pressure transducer.

REMOVAL

(1) Disconnect and isolate the battery negative cable.

(2) Unplug the wire harness connector from the A/C pressure transducer switch, which is mounted to a fitting on the line between the compressor and the condenser inlet.

NOTE: On the 2.4L Turbo engine it may be necessary to move or relocate the cooling module, power steering pump or lines to gain access to the A/C pressure transducer.

(3) Unscrew the A/C pressure transducer switch from the discharge line fitting.

(4) Remove the A/C pressure transducer switch from the vehicle.

(5) Remove the O-ring seal from the discharge line fitting and discard.

INSTALLATION

(1) Lubricate a new O-ring seal with clean refrigerant oil and install it on the discharge line fitting. Use only the specified O-rings as they are made of a special material for the R-134a system. Use only refrigerant oil of the type recommended for the compressor in the vehicle.

(2) Install and tighten the A/C pressure transducer switch on the discharge line fitting.

(3) Plug the wire harness connector into the A/C pressure transducer switch.

NOTE: On the 2.4L Turbo Engine reposition the cooling module, power steering pump or lines if they were moved to gain access to the A/C pressure transducer.

(4) Connect the battery negative cable.

BLOWER MOTOR RESISTOR BLOCK

DESCRIPTION

The blower motor resistor is located in the cowl, at the base of the windshield (Fig. 17). There are two different resistor blocks depending on whether the vehicle is equipped with A/C or not. The blower motor resistors will get hot when in use. Do not touch resistor block if the blower motor has been running.

REMOVAL

CAUTION: Stay clear of the blower motor and resistor block (Hot). Do not operate the blower motor with the resistor block removed.

(1) Remove windshield wipers (Refer to 8 - ELECTRICAL/WIPERS/WASHERS/WIPER ARMS - REMOVAL).

(2) Remove cowl top screen (Refer to 23 - BODY/EXTERIOR/COWL GRILLE SCREEN - REMOVAL).

(3) Disconnect the resistor block wiring connector (Fig. 18).

(4) Remove/unsnap resistor block from vehicle.

(5) Remove the resistor block from the vehicle.

BLOWER MOTOR RESISTOR BLOCK (Continued)

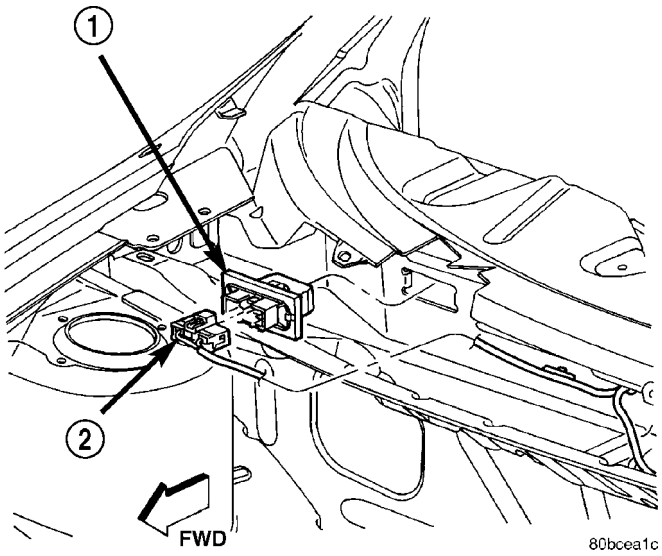

Fig. 17 Blower Motor Resistor Block - (typical)

1 - RESISTOR BLOCK
2 - ELECTRICAL CONNECTOR

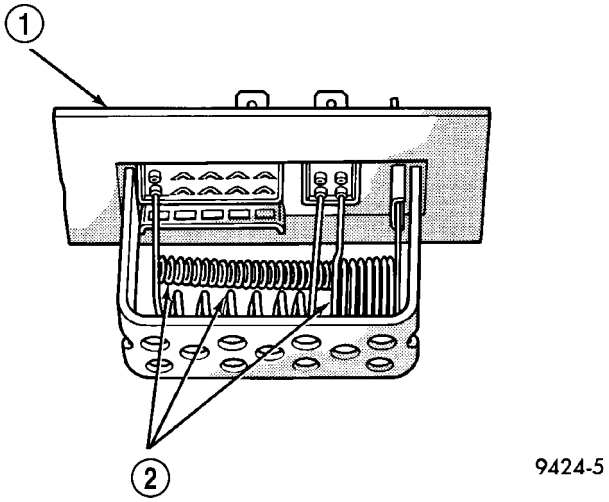

Fig. 18 BLOWER MOTOR RESISTORS - (TYPICAL)

1 - RESISTOR BLOCK
2 - RESISTORS

INSTALLATION

CAUTION: Stay clear of the blower motor and resistor block (Hot). Do not operate the blower motor with the resistor block removed.

(1) Snap the new Blower Motor Resistor Block into place.

(2) Connect the resistor block wiring connector.

(3) Install the cowl top screen (Refer to 23 - BODY/EXTERIOR/COWL GRILLE SCREEN - INSTALLATION).

(4) Install the windshield wipers (Refer to 8 - ELECTRICAL/WIPERS/WASHERS/WIPER ARMS - INSTALLATION).

(5) Reconnect the battery negative cable.

MODE DOOR CABLE

REMOVAL

The Mode Control Cable can be removed and installed without having to remove the instrument panel from the vehicle.

(1) Disconnect and isolate the battery negative cable.

(2) Remove instrument panel center stack bezel (Fig. 19).

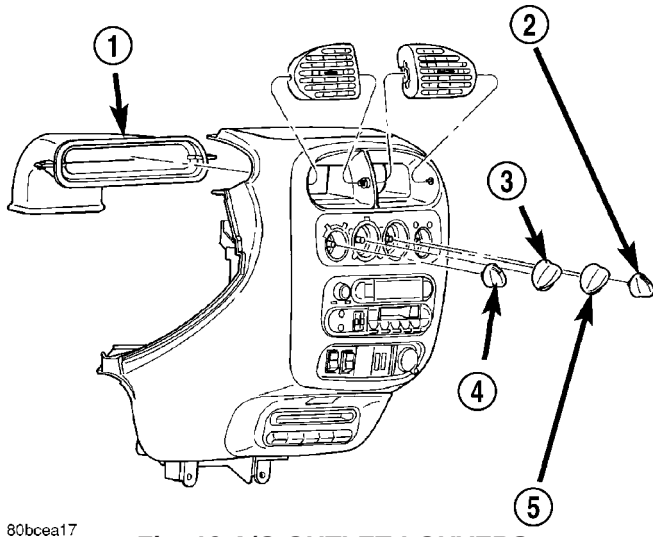

Fig. 19 A/C OUTLET LOUVERS

1 - INSTRUMENT PANEL CENTER AIR DUCT
2 - OUTSIDE AIR/RECIRC CONTROL KNOB
3 - MODE CONTROL KNOB
4 - BLOWER SPEED KNOB
5 - TEMPERATURE CONTROL KNOB

(3) Remove center air duct (Fig. 20).

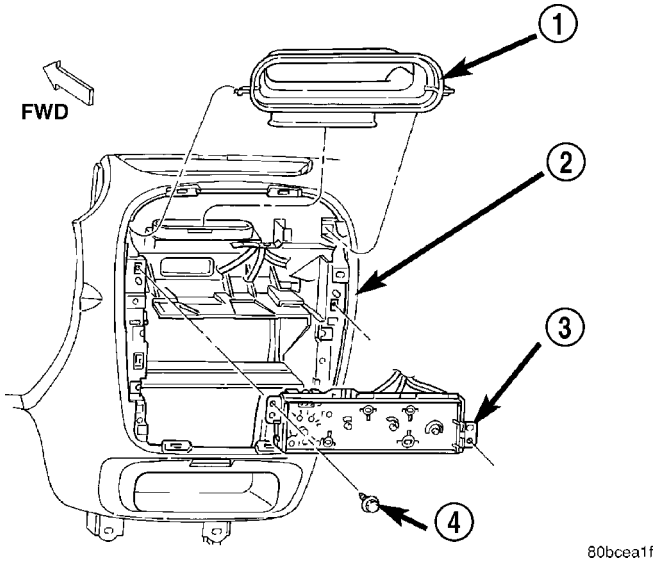

Fig. 20 HVAC CENTER AIR DUCT & CONTROL HEAD

1 - CENTER AIR DUCT
2 - INSTRUMENT PANEL
3 - HVAC CONTROL HEAD
4 - ATTACHING SCREWS

MODE DOOR CABLE (Continued)

(4) Remove heater-A/C control head and disconnect cable (Fig. 21).

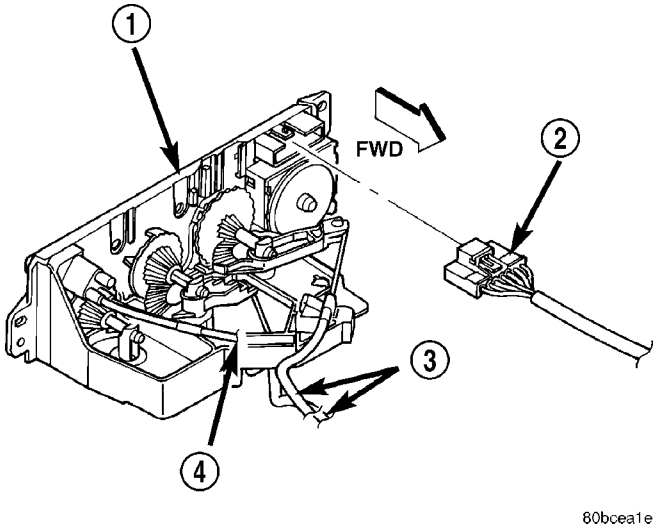

Fig. 21 HVAC CONTROL HEAD CABLES

1 - HVAC CONTROL HEAD
2 - ELECTRICAL CONNECTOR
3 - CONTROL CABLES
4 - VACUUM HARNESS

(5) Disconnect the mode control cable end from the mode door lever.

(6) Remove the mode control cable through the instrument panel heater-A/C control opening.

INSTALLATION

The Mode Control Cable can be removed and installed without having to remove the instrument panel from the vehicle.

(1) Position the mode ocntrol cable through the instrument panel heater-A/C control opening.

(2) Reach through the instrument panel center air duct opening to access and reconnect the mode control cable end to the mode door lever.

(3) Install and tighten the screw that secures the mode control cable housing. Tighten the screw to 2.3 N·m (20 in. lbs.).

(4) Install the instrument panel center stack bezel.

(5) Reinstall the battery negative cable.

ADJUSTMENT

(1) Engage cable to actuator arm lever on mode door and attach to housing.

(2) Attach other end of cable to instrument panel control.

(3) Turn the mode knob completely counterclockwise.

(4) While holding the knob in the counterclockwise position, pull on the gray casing of the mode cable. This will take up any free play in the cable and index the mode door to the mode knob.

(5) Then snap the cable hold down clip into position.

RECIRCULATION DOOR ACTUATOR

DESCRIPTION

The vehicle uses vacuum to operate only the recirculation door (Fig. 22). All other controls are cable. When vacuum is supplied to the actuator, the door moves to the Recirculation position (Fig. 23). The actuator is spring loaded so the door moves to the Outside-air position when there is no vacuum supplied. The operation of the door can be viewed by removing the blower motor and looking up into the unit inlet.

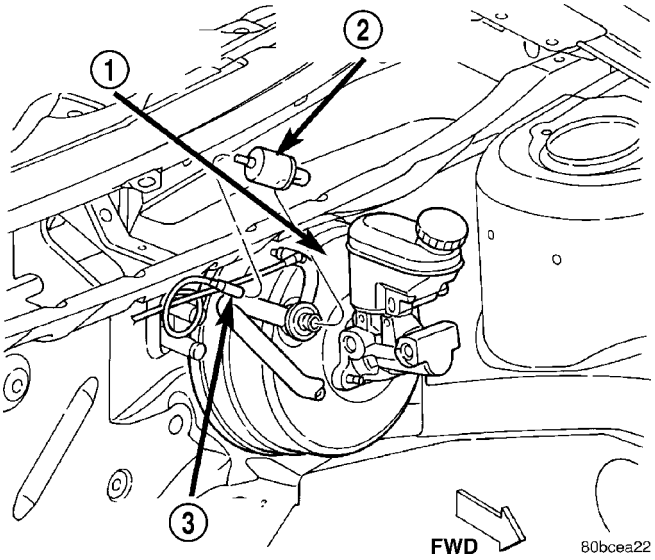

Fig. 22 A/C VACUUM LINE

1 - BRAKE POWER BOOSTER
2 - A/C VACUUM CHECK VALVE
3 - VACUUM HARNESS

Normally, vacuum is supplied to the actuator by placing the Circulation control knob in the Recirculation position. The Mode and the circulation control are mechanically interlocked so the circulation control cannot be placed in the RECIRC position if the mode control is at or between the mix and defrost positions. Vacuum is supplied to the actuator only when circulation control is at the RECIRC position. If the circulation control is between the outside air position and RECIRC position the system will be in outside air. If the circulation control is in the RECIRC position and the mode control is moved from the floor to the defrost positions, the circulation control will move from the RECIRC position, to the outside air position beginning at the mix position. This is to prevent window fogging.

RECIRCULATION DOOR ACTUATOR (Continued)

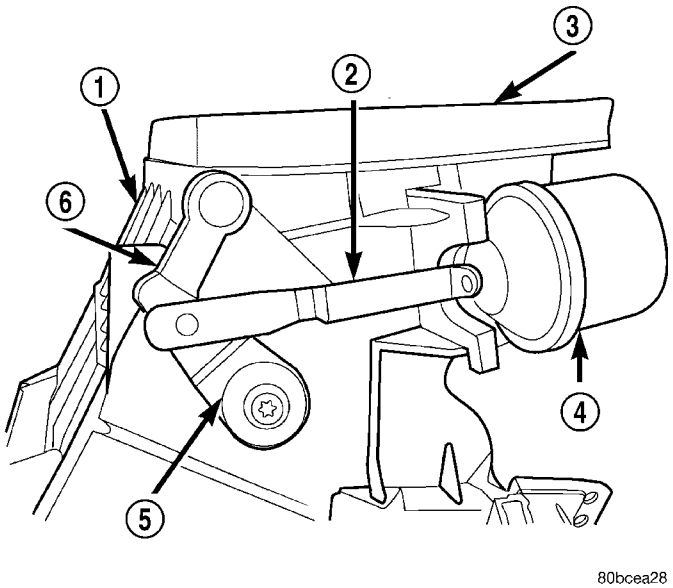

Fig. 23 RECIRCULATION AIR DOOR VACUUM ACUATOR

1 - OUTSIDE AIR/RECIRC DOOR HOUSING
2 - VACUUM ACTUATOR LINKAGE
3 - FOAM SEAL
4 - RECIRC DOOR VACUUM ACTUATOR
5 - DOOR LEVER
6 - DOOR LEVER

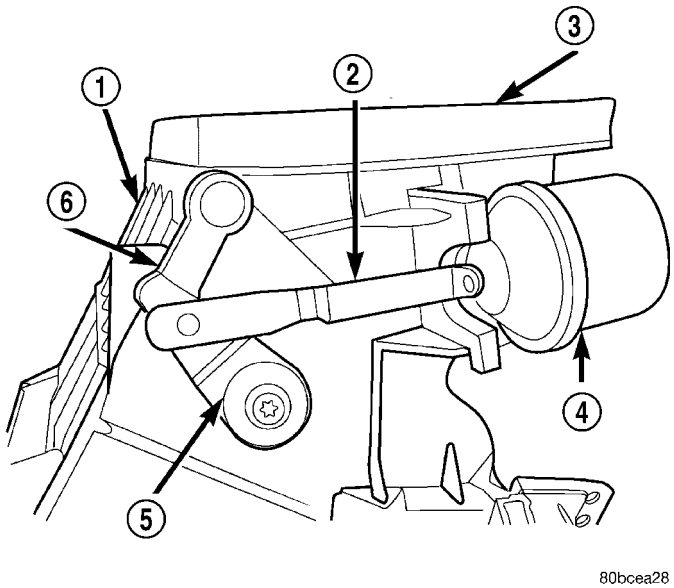

Fig. 24 RECIRCULATION AIR DOOR VACUUM ACUATOR

1 - OUTSIDE AIR/RECIRC DOOR HOUSING
2 - VACUUM ACTUATOR LINKAGE
3 - FOAM SEAL
4 - RECIRC DOOR VACUUM ACTUATOR
5 - DOOR LEVER
6 - DOOR LEVER

REMOVAL

The recirculation door actuator is a vacuum controlled actuator used to control movement of the recirculation door in air conditioner equipped vehicles.

NOTE: The instrument panel must be removed from the vehicle to gain access to the recirculation door actuator.

(1) Remove the battery negative cable
(2) Remove instrument panel from vehicle(Refer to 23 - BODY/INSTRUMENT PANEL/INSTRUMENT PANEL ASSEMBLY - REMOVAL).
(3) Disconnect vacuum line harness connector from the nipple on the recirculation door actuator.
(4) Release the latch that secures the recirculation door actuator mount to the stanchion on the heater-A/C unit housing, and disengage the recirculation door actuator from the housing.
(5) Disconnect the recirculation door actuator linkage from the recirculation door lever. (Fig. 24).
(6) Remove the recirculation door actuator from the heater-A/C unit housing.

INSTALLATION

The recirculation door actuator is a vacuum controlled actuator used to control movement of the recirculation door in air conditioned equipped vehicles.

(1) Position the recirculation door actuator to the heater-A/C unit housing.
(2) Reconnect the recirculation door actuator linkage to the recirculation door lever.
(3) Align the recirculation door actuator mount to the stanchion on the heater-A/C unit housing, and press it onto the stanchion firmly and to engage the latch.
(4) Reconnect the vacuum harness connector to the nipple on the recirculation door actuator.
(5) Reinstall the Instrument Panel (Refer to 23 - BODY/INSTRUMENT PANEL/INSTRUMENT PANEL ASSEMBLY - INSTALLATION)
(6) Reconnect the battery negative cable.

TEMPERATURE CONTROL CABLES

REMOVAL

(1) Disconnect and isolate the battery negative cable.
(2) Remove instrument panel center stack bezel-(Refer to 23 - BODY/INSTRUMENT PANEL/INSTRUMENT PANEL CENTER BEZEL - REMOVAL).
(3) Remove the center air duct from the instrument panel.

TEMPERATURE CONTROL CABLES (Continued)

(4) Remove heater-A/C control (Refer to 24 - HEATING & AIR CONDITIONING/CONTROLS/A/C HEATER CONTROL - REMOVAL).

(5) Reach through the instrument panel center air duct opening to access and remove the screw that secures the temperature control cable housing retainer to the top of the heater-A/C unit housing.

(6) Disconnect cable at control panel. Remove control from instrument panel.

(7) Disconnect the temperature control cable end from the blend-air door lever. (Fig. 25).

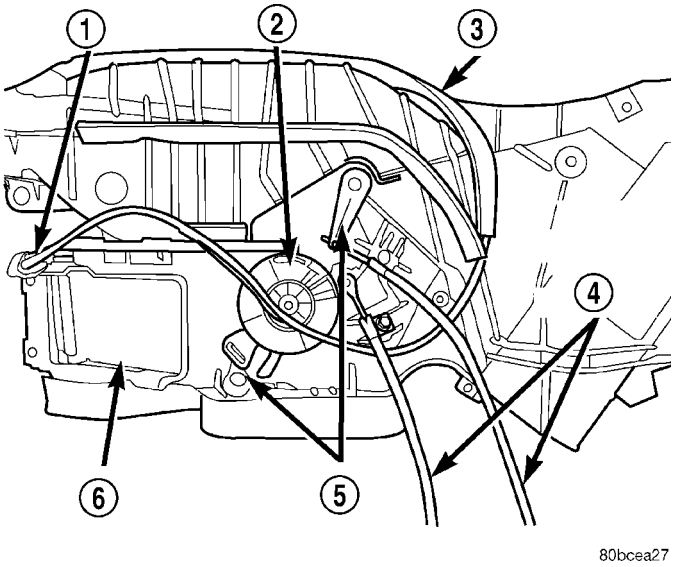

Fig. 25 HVAC HOUSING CABLES - (TYPICAL)

1 - VACUUM HARNESS
2 - DOOR CAM
3 - HVAC UPPER HOUSING
4 - HVAC CONTROL HEAD CABLES
5 - MODE DOOR LEVERS
6 - DEFROSTER DUCT OUTLET

(8) Remove the temperature control cable through the instrument panel heater-A/C control opening.

INSTALLATION

(1) Position the temperature control cable through the instrument panel heater-A/C control opening..

(2) Reach through the instrument panel center air duct opening to access and reconnect the temperature control cable end to the blend-air door lever.

(3) Install and tighten the screw that secures the temperature control cable housing retainer to the top of the heater-A/C unit housing. Tighten the screw to 2.3 N·m (20 in. lbs.).

(4) Reinstall the heater-A/C control into the instrument panel(Refer to 24 - HEATING & AIR CONDITIONING/CONTROLS/A/C HEATER CONTROL - INSTALLATION).

(5) Install the instrument panel center stack bezel-(Refer to 23 - BODY/INSTRUMENT PANEL/INSTRUMENT PANEL CENTER BEZEL - INSTALLATION).

(6) Reconnect the battery negative cable.

ADJUSTMENTS

(1) Engage cable to actuator arm on temperature door and attach to housing.

(2) Attach other end of cable to instrument panel control.

(3) Turn the temperature knob completely counterclockwise.

(4) While holding the knob in the counterclockwise position, pull on the gray casing of the temperature cable. This will take up any free play in the cable and index the temperature door to the temperature knob.

(5) Then snap the cable hold down clip into position.

(6) Remount control.

DISTRIBUTION

DESCRIPTION

DESCRIPTION - SYSTEM AIRFLOW

The system pulls outside (ambient) air through the cowl opening at the base of the windshield. Then it goes into the plenum chamber above the heater-A/C housing. On air conditioned vehicles, the air passes through the evaporator. Air flow can be directed either through or around the heater core. This is done by adjusting the blend-air door with the TEMP control on the instrument panel. The air flow can then be directed from the panel, floor and defrost outlets in various combinations using the mode selector. There are 17 different mode selections possible. Air flow velocity can be adjusted with the blower speed selector switch on the instrument panel.

On A/C equipped vehicles the ambient air intake can be controlled by opening and closing the recirculating air door. When placed in RECIRC, air that is inside vehicle is removed continuously and recirculated through unit housing. Ambient air cannot be controlled on vehicles without A/C. The system uses outside air at all times.

The air conditioning compressor can be engaged by turning the fan switch counterclockwise from the off position. It can also be engaged by placing the mode control in the mix to defrost positions. This will remove heat and humidity from the air before it is directed through or around the heater core.

DISTRIBUTION (Continued)

DESCRIPTION - HEATER AND AIR CONDITIONING

All vehicles are equipped with a common heater-A/C housing assembly (Fig. 26). The system combines air conditioning, heating, and ventilating capabilities in a single unit housing mounted under the instrument panel. On heater-only systems, the evaporator coil is omitted from the housing and replaced with an air restrictor plate.

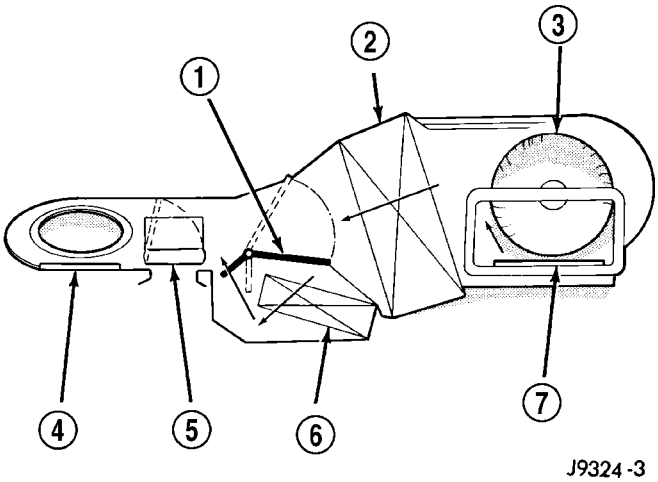

Fig. 26 Common Blend-Air HVAC (Heating, Ventilation, Air Conditioning) System - Typical

1 - TEMPERATURE BLEND/AIR DOOR
2 - EVAPORATOR CORE
3 - BLOWER
4 - PANEL DEFROST DOOR
5 - HEAT DEFROST DOOR
6 - HEATER CORE
7 - RECIRCULATING AIR DOOR

Outside air enters the vehicle through the cowl top opening at the base of the windshield, and passes through a plenum chamber to the heater-A/C system blower housing. Air flow velocity can then be adjusted with the blower motor speed selector switch on the heater-A/C control panel. The air intake openings must be kept free of snow, ice, leaves, and other obstructions for the heater-A/C system to receive a sufficient volume of outside air.

It is also important to keep the air intake openings clear of debris because leaf particles and other debris that are small enough to pass through the cowl plenum screen can accumulate within the heater-A/C housing. The closed, warm, damp and dark environment created within the heater-A/C housing is ideal for the growth of certain molds, mildews and other fungi. Any accumulation of decaying plant matter provides an additional food source for fungal spores, which enter the housing with the fresh air. Excess debris, as well as objectionable odors created by decaying plant matter and growing fungi can be discharged into the passenger compartment during heater-A/C system operation.

The heater and optional air conditioner are blend-air type systems. In a blend-air system, a blend-air door controls the amount of unconditioned air (or cooled air from the evaporator on models with air conditioning) that is allowed to flow through, or around, the heater core. A temperature control knob on the heater-A/C control panel determines the discharge air temperature by moving a cable, which operates the blend-air door. This allows an almost immediate manual control of the output air temperature of the system.

The mode control knob on the heater-only or heater-A/C control panel is used to direct the conditioned air to the selected system outlets. The mode control switch uses a cable to control the mode door, while the recirculation air door is operated by a vacuum actuator motor.

On air conditioned vehicles, the outside air intake can be shut off by selecting the recirculation mode (Recirc) with the mode control knob. This will operate a vacuum actuated recirculating air door that closes off the outside fresh air intake and recirculates the air that is already inside the vehicle.

The optional air conditioner for all models is designed for the use of non-CFC, R-134a refrigerant. The air conditioning system has an evaporator to cool and dehumidify the incoming air prior to blending it with the heated air. This air conditioning system uses an evaporator probe to maintain minimum evaporator temperature and prevent evaporator freezing, and cycles the compressor clutch.

AIR FILTER - EXPORT

DESCRIPTION

All Export model PT-44's are now equipped with an Air Conditioning Air Filter. The filter is mounted under the hood in the air intake. The filter should be checked and replaced at least once every 24,000 km (15,000 miles) and checked if system performance seems lower than expected.

REMOVAL

(1) Open the hood.

(2) Remove the passenger side cowl grille screen-(Refer to 23 - BODY/EXTERIOR/COWL GRILLE SCREEN - REMOVAL).

(3) Loosen the bolts fastening windshield washer reservoir to the body. Removal of the reservoir is not necessary just loosen it enough to allow access to the filter element.

(4) Remove the filter element by lifting the filter element up and out of it housing.

AIR FILTER - EXPORT (Continued)

INSTALLATION

(1) Install filter element by inserting the element down directly into the element housing. The filter is held in place by friction between the filter element and the housing so no fasteners are used..

(2) Position windshield washer reservoir and tighten bolts to 8 N·m (70 in. lbs.).

(3) Install passenger side cowl grill screen(Refer to 23 - BODY/EXTERIOR/COWL GRILLE SCREEN - INSTALLATION).

(4) Close hood.

AIR FLOW DISTRIBUTION

DESCRIPTION

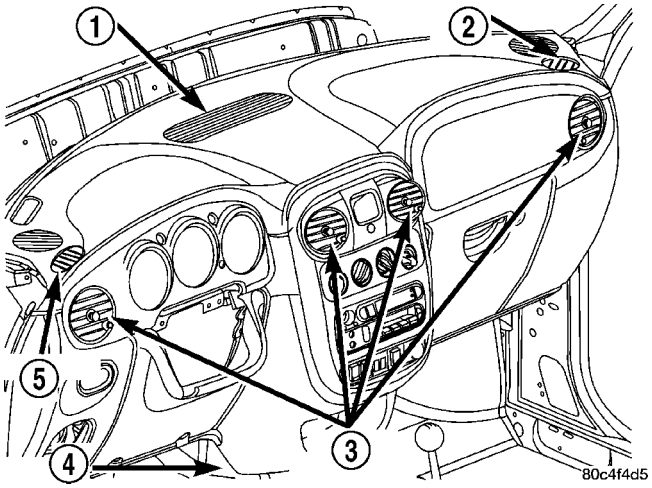

Fig. 27 HVAC OUTLETS

1 - DEFROST
2 - DE-MIST
3 - PANEL OUTLETS
4 - FLOOR
5 - DE-MIST

Based upon the system mode selected, conditioned air can exit the standard heater-only or optional heater-A/C unit housing through one or a combination of the three main housing outlets: defrost, panel or floor. The defrost outlet is located on the top of the housing, the panel outlet is located on the face of the housing and the floor outlet is located on the bottom of the housing. Once the conditioned air exits the unit housing, it is further directed through molded plastic ducts to the various outlets in the vehicle interior (Fig. 27). These outlets and their locations are as follows:

- **Defroster Outlet** - A single large defroster outlet is located in the center of the instrument panel top cover, near the base of the windshield.
- **Side Window Demister Outlets** - There are two side window demister outlets, one is located at each outboard end of the instrument panel top cover, near the belt line at the A-pillars.
- **Panel Outlets** - There are four panel outlets in the instrument panel, one located near each outboard end of the instrument panel facing the rear of the vehicle and two located near the top of the instrument panel center bezel.
- **Front Floor Outlets** - There are four front floor outlets, two located above each side of the floor panel center tunnel near the dash panel.
- **Rear Floor Outlets** - There are two rear floor outlets, one located on each side of the floor panel center tunnel near the front of each rear seat foot well.

OPERATION

The defroster outlet receives airflow from the unit housing through the molded plastic defroster duct, which is snapped onto the unit housing defroster outlet and secured by two tabs to mounting slots in the dash panel. The airflow from the defroster outlet is directed by fixed vanes in the defroster outlet grille and cannot be adjusted. The defroster outlet grille is integral to the instrument panel top cover.

The side window demister outlets receive airflow from the unit housing through the air outlet distribution duct, two molded plastic demister hoses and, on the right side only, an intermediate duct. The air outlet distribution duct is secured to the instrument panel with screws and receives airflow through the panel outlet of the unit housing. The airflow from the side window demister outlets is directed by fixed vanes in the demister outlet grilles and cannot be adjusted. The side window demister outlet grilles are integral to the instrument panel top cover.

The panel outlets also receive airflow from the unit housing through the air outlet distribution duct. Molded plastic panel outlet ducts and, on the left side only, an intermediate elbow direct airflow from the distribution duct to the outboard panel outlets, while a center air outlet duct directs airflow from the distribution duct to the two center panel outlets. The airflow from each of the panel outlets is adjustable. A knob in the center of each panel outlet grille is used in a joystick fashion to adjust a center diffuser that changes the airflow direction, and a knob on the outer edge of each panel outlet grille opens or closes a shutter to turn airflow on or off through that outlet.

The front and rear floor outlets receive airflow from the unit housing through the floor distribution duct. The front floor outlets are integral to the molded plastic floor distribution duct, which is secured to the bottom of the unit housing. A molded plastic rear seat duct elbow is fitted to the bottom of the floor distribution duct and directs airflow

AIR FLOW DISTRIBUTION (Continued)

through a molded plastic duct beneath the carpet on the right side of the floor panel center tunnel to the right rear floor outlet. The right floor duct also features a crossover fitting that joins the right floor duct to the left floor duct over the top of the floor panel center tunnel to direct airflow to the left rear floor outlet. None of the floor outlets can be adjusted.

AIR OUTLETS

DESCRIPTION

The demisters direct air from the unit housing through the outlets located on the top corners of the instrument panel. The demisters operate when the mode selector is anywhere between floor and defrost settings. Some air may be noticeable from the demister outlets when the mode selector is in the bi-level to floor positions.

REMOVAL - CENTER AIR OUTLET DUCT

(1) Remove the center bezel from the instrument panel.

(2) Remove the screws that secure the center air outlet duct to the instrument panel.

(3) Disengage the center air outlet duct from the air outlet distribution duct.

(4) Remove the center air outlet duct from the instrument panel.

INSTALLATION - CENTER AIR OUTLET DUCT

(1) Install the center air outlet duct to the instrument panel.

(2) Engage the center air outlet duct to the air outlet distribution duct.

(3) Install the screws that secure the center air outlet duct to the instrument panel. Tighten to 2.3 N·m (20 in. lbs.).

(4) Install the center bezel to the instrument panel.

BLOWER MOTOR

DESCRIPTION - BLOWER MOTOR WHEEL

The blower motor wheel is only serviced with the blower motor. The wheel and the motor are balanced as an assembly. If the blower motor wheel requires replacement, the blower motor must also be replaced. Refer to blower motor for replacement procedure.

OPERATION

The blower motor will only operate when the ignition switch is in the On position, and the blower control switch is in any position except Off. The blower motor circuit is protected by a fuse in the instrument panel fuse block. The blower motor speed is controlled by regulating the battery feed through the blower control switch and the blower motor resistor. The blower motor and wheel are used to control the velocity of air moving through the heater-only or heater-A/C unit housing. The blower motor controls the velocity of the air flowing through the heater-A/C housing by spinning the blower wheel within the housing at the selected speed.

DIAGNOSIS AND TESTING - BLOWER MOTOR

For circuit descriptions and diagrams, refer to the appropriate wiring information. The wiring information includes wiring, diagrams, proper wire and connector repair procedures, further details on wire harness routing and retention, as well as pin-out and location views for the various wire harness connectors, splices and grounds. The following chart will give you a basic check list on the blower motor circuit (Fig. 28).

REMOVAL

The blower motor is located on the bottom left side of the unit housing. The blower motor can be removed from the vehicle without having to remove the unit housing assembly.

BLOWER MOTOR (Continued)

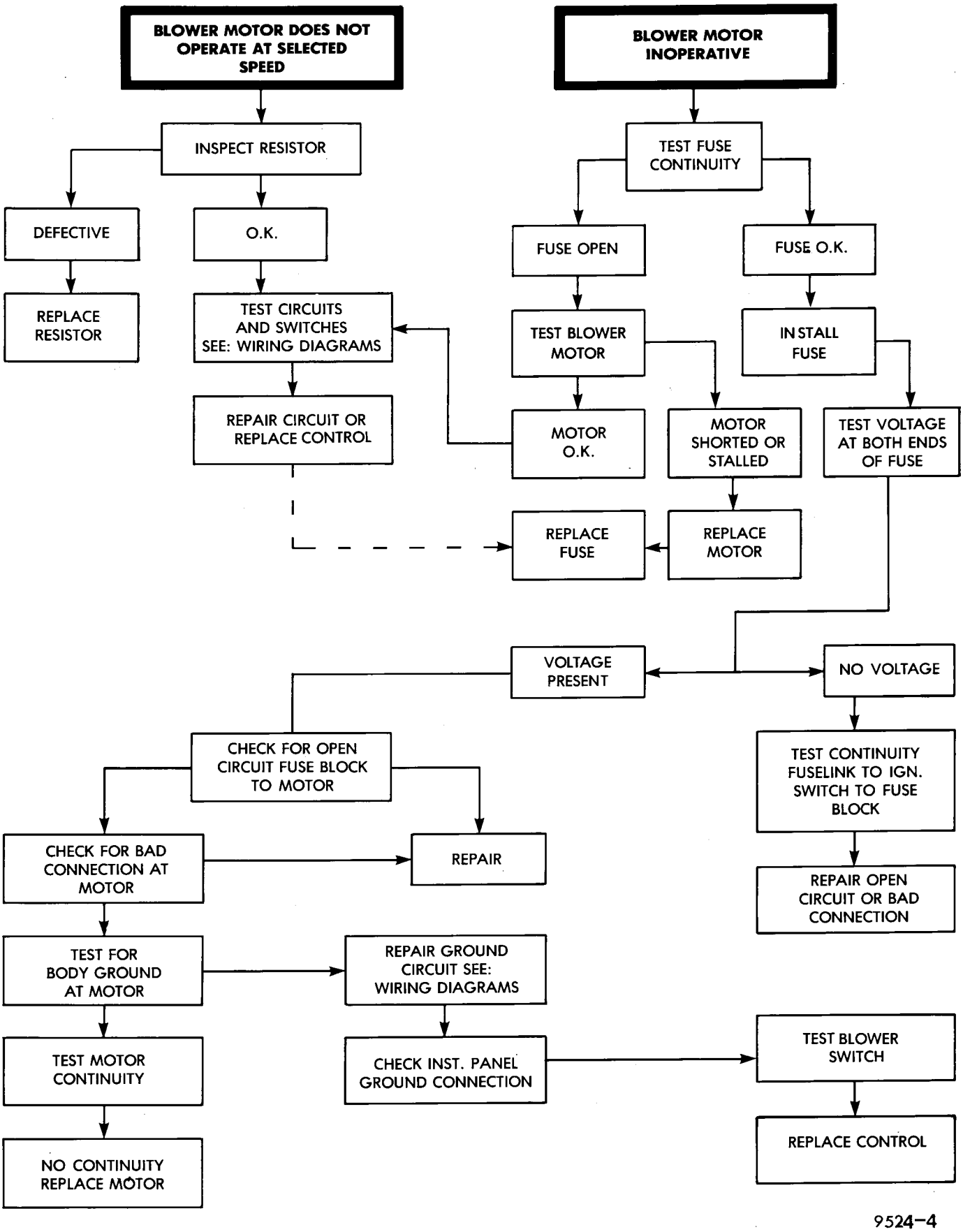

Fig. 28 BLOWER MOTOR ELECTRICAL DIAGNOSIS

BLOWER MOTOR (Continued)

WITH AIR CONDITIONING

(1) Remove left side scuff plate.
(2) Pull back carpet.
(3) Disconnect blower motor wiring connector.
(4) Remove blower motor retaining screws, and lower blower motor assembly from unit housing (Fig. 29).

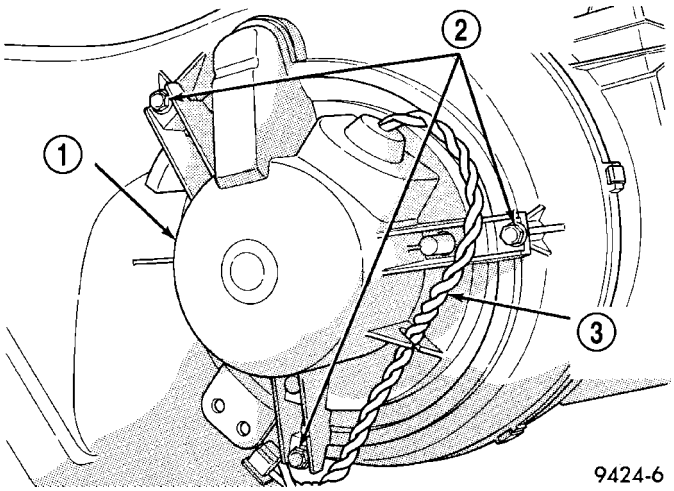

Fig. 29 BLOWER MOTOR RETAINING SCREWS

1 - BLOWER MOTOR
2 - BLOWER MOTOR RETAINING SCREWS
3 - BLOWER MOTOR WIRING

WITHOUT AIR CONDITIONING

(1) Disconnect blower motor wiring connector.
(2) Grasp the blower motor while pulling down tab. Turn approximately 1/8 turn counterclockwise and remove blower motor assembly from unit housing (Fig. 30).

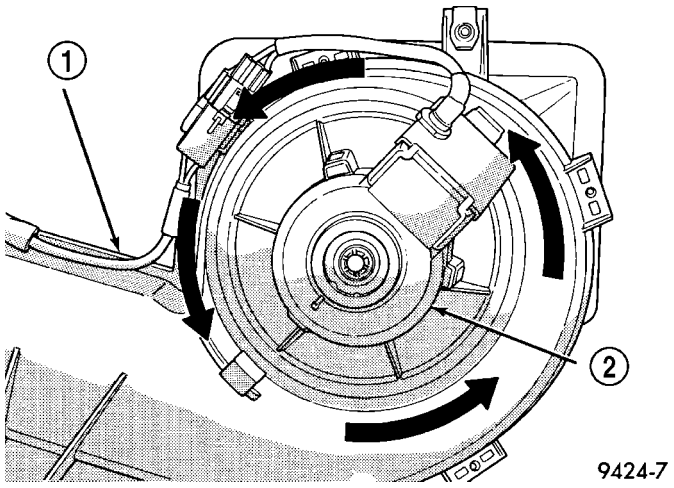

Fig. 30 BLOWER MOTOR REMOVAL

1 - BLOWER MODULE
2 - BLOWER MOTOR

INSTALLATION

The blower motor is located on the bottom left side of the unit housing. The blower motor can be removed from the vehicle without having to remove the unit housing assembly.

WITH AIR CONDITIONING

(1) Position the blower motor into the unit housing.
(2) Install the blower motor retaining screws.
(3) Connect the wire harness to the blower motor.
(4) Reposition the left side carpet.
(5) Install the left side scuff plate.

WITHOUT AIR CONDITIONING

(1) Position the blower motor in the unit housing.
(2) Rotate the blower motor clockwise until tab snaps into the locked position, approximately 1/8 turn.

HVAC HOUSING

REMOVAL

The instrument panel must be removed in order to remove the heater-A/C Housing.(Refer to 23 - BODY/INSTRUMENT PANEL/INSTRUMENT PANEL ASSEMBLY - REMOVAL).

WARNING: THE R-134a REFRIGERANT SYSTEM MUST BE RECOVERED BEFORE SERVICING ANY PART OF THE REFRIGERANT SYSTEM.

(1) Using a refrigerant recovery machine, remove the refrigerant from the A/C system, if equipped(Refer to 24 - HEATING & AIR CONDITIONING - STANDARD PROCEDURE).
(2) Remove instrument panel from vehicle (Refer to 23 - BODY/INSTRUMENT PANEL/INSTRUMENT PANEL ASSEMBLY - REMOVAL).
(3) Drain cooling system.
(4) Remove heater hoses at the dash panel. Place plugs in the heater core outlets to prevent coolant spillage during unit housing removal.
(5) Unfasten coolant recovery container and set aside.
(6) Remove suction line at expansion valve (Refer to 24 - HEATING & AIR CONDITIONING/PLUMBING/SUCTION LINE - REMOVAL). Cap open refrigerant lines to prevent moisture and/or dirt from entering.
(7) Remove expansion valve from evaporator, and cap fittings (Refer to 24 - HEATING & AIR CONDITIONING/PLUMBING/A/C EVAPORATOR - REMOVAL).

HVAC HOUSING (Continued)

(8) Remove rubber drain tube extension from condensation drain tube.

(9) Disconnect the vacuum harness at the power brake booster.

(10) Unsnap and remove the defroster duct (Fig. 31).

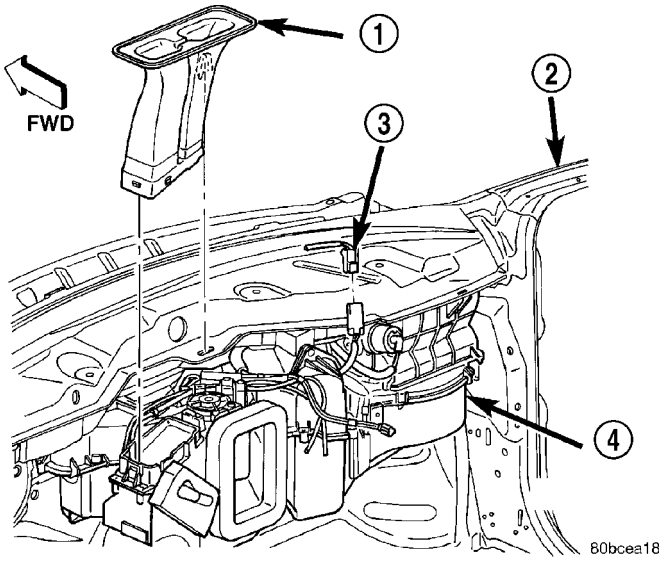

Fig. 31 HVAC HOUSING DEFROSTER DUCT - (RHD SHOWN)

1 - DEFROSTER DUCT
2 - BODY
3 - ELECTRICAL CONNECTOR
4 - HVAC HOUSING

(11) Remove three retaining nuts located in the engine compartment, on the dash panel (Fig. 32).

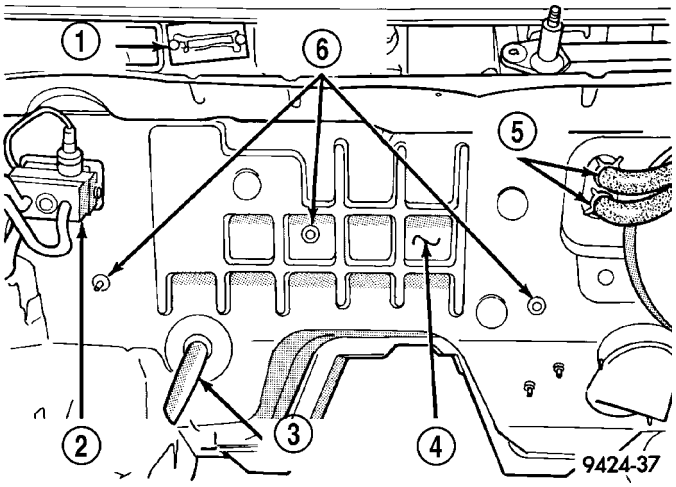

Fig. 32 DASH PANEL RETAINING STUDS

1 - BLOWER RESISTOR
2 - EXPANSION VALVE
3 - DRAIN TUBE
4 - DASH PANEL
5 - HEATER HOSES
6 - RETAINING STUDS

(12) Remove the right side retaining screw (Fig. 33).

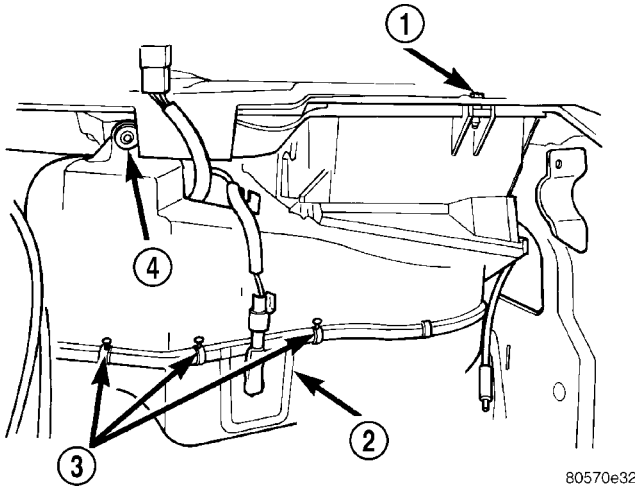

Fig. 33 HOUSING SCREWS

1 - RIGHT SIDE RETAINING SCREW
2 - EVAPORATOR PROBE GROMMET
3 - SCREW BOSSES
4 - DASH PANEL STUD AND NUT

(13) Remove remaining nut located on dash panel stud.

(14) Disconnect the wiring connectors.

(15) Remove assembly from the vehicle.

DISASSEMBLY

Use this procedure if any or all of the following items require service:

- Heater core
- Evaporator
- HVAC housing

The HVAC housing must be removed from the vehicle before beginning with this procedure (Refer to 24 - HEATING & AIR CONDITIONING/DISTRIBUTION/HVAC HOUSING - REMOVAL).

(1) Separate the air distribution outlet foam seals at the case parting line (Fig. 34).

(2) Remove the evaporator lines foam seal, and heater core tubes foam seal from the unit (Fig. 35).

(3) Remove the retaining clips and screws that hold the upper and lower housings together.

(4) Separate the two halves of the housing.

(5) Lift the heater core and evaporator out of the case.

ASSEMBLY

(1) Install the heater and evaporator cores into the case.

(2) Place the two halves of the heater-a/c housing together.

(3) Install the retaining clips and screws that hold the upper and lower case housings together.

HVAC HOUSING (Continued)

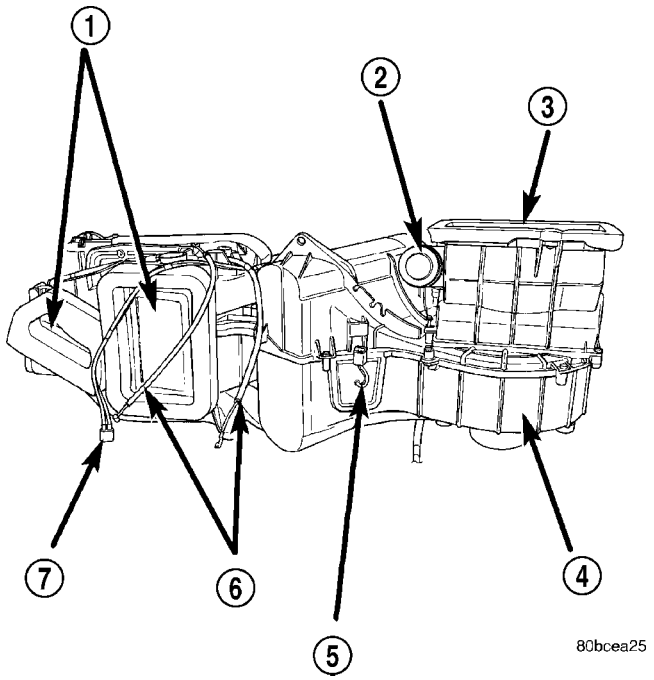

Fig. 34 HVAC HOUSING AIR DISTRIBUTION FORM SEAL

1 - AIR DISTRIBUTION
2 - RECIRCULATION DOOR VACUUM ACTUATOR
3 - AIR INLET
4 - BLOWER MOTOR
5 - EVAPORATOR PROBE CONNECTOR
6 - CONTROL CABLES
7 - VACUUM HARNESS

(4) Install the evaporator lines form seals and heater core tube seals to the case housing.

(5) Install the air distribution outlet foam seals at the case parting line.

INSTALLATION

WARNING: THE R-134a REFRIGERANT SYSTEM MUST BE RECOVERED BEFORE SERVICING ANY PART OF THE REFRIGERANT SYSTEM.

(1) Position the housing in the vehicle.

(2) Connect the wire harness connectors.

(3) Install the nut on the dash panel stud.

(4) Install the three retaining nuts on the engine compartment studs.

(5) Snap the defrost duct in place.

(6) Connect the vacuum harness at the brake booster.

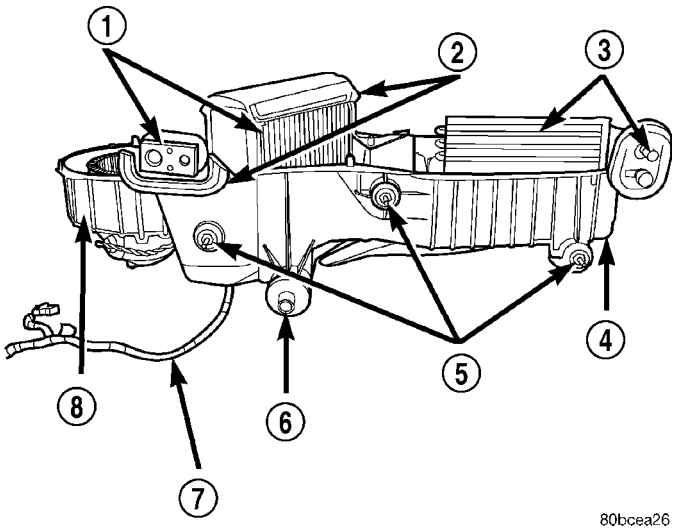

Fig. 35 LOWER HVAC HOUSING

1 - EVAPORATOR AND CONNECTION
2 - FOAM SEALS
3 - HEATER CORE AND TUBES
4 - HVAC HOUSING LOWER CASE
5 - HOUSING MOUNTING STUDS
6 - HOUSING DRAIN
7 - WIRING
8 - BLOWER MOTOR AND WHEEL

(7) Connect the rubber drain tube to the extension.

(8) Install the expansion valve to the evaporator (Refer to 24 - HEATING & AIR CONDITIONING/ PLUMBING/A/C EXPANSION VALVE - INSTALLATION).

(9) Remove the protective caps and connect the suction line to the expansion valve (Refer to 24 - HEATING & AIR CONDITIONING/PLUMBING/ SUCTION LINE - INSTALLATION).

(10) Position and install the coolant recovery container.

(11) Install the instrument panel (Refer to 23 - BODY/INSTRUMENT PANEL/INSTRUMENT PANEL ASSEMBLY - INSTALLATION)

(12) Refill the cooling system.

(13) Evacuate the refrigerant system (Refer to 24 - HEATING & AIR CONDITIONING - STANDARD PROCEDURE).

(14) Recharge the refrigerant system (Refer to 24 - HEATING & AIR CONDITIONING - STANDARD PROCEDURE).

A/C COMPRESSOR

DESCRIPTION

DESCRIPTION

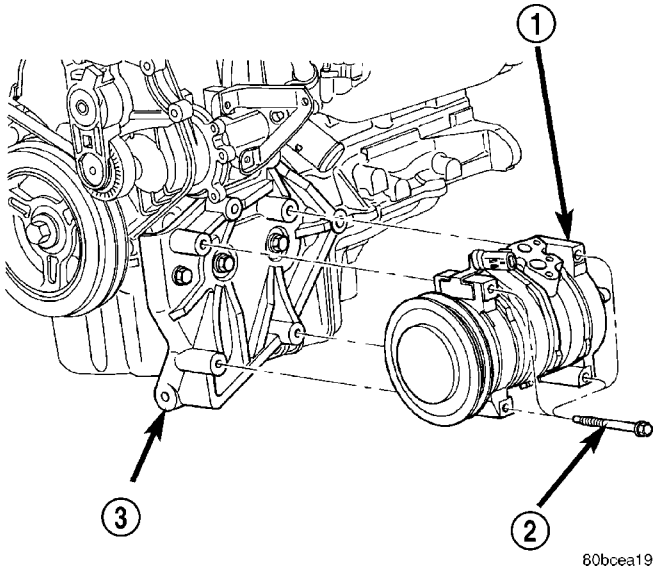

Fig. 36 A/C COMPRESSOR MOUNTING BOLTS

1 - A/C COMPRESSOR
2 - MOUNTING BOLTS
3 - LOWER FRONT STRUT-TO-ENGINE BRACKET

The compressor (Fig. 36) used on this vehicle can be one of two models, depending upon the transmission in the vehicle. Vehicles with a manual transmission use the Nippondenso 10S15 compressor, while vehicles with an automatic transmission use the Nippondenso 10S17 unit. These compressors use an aluminum swash plate, teflon coated pistons and aluminum sleeveless cylinder walls. A high pressure cut out switch is located on the back cover of the compressor.

The compressor is secured to the lower front strut-to-engine bracket with four screws. The lower front strut-to-engine bracket is located on the lower, forward skirt of the engine block which is located in the right front corner of the engine compartment.

The compressor cannot be repaired. If faulty or damaged, the entire compressor unit must be replaced. The compressor clutch, pulley, clutch coil and the high pressure cut out switch are available for service replacement.

DESCRIPTION - COMPRESSOR FRONT SHAFT SEAL

The compressor front shaft seal is not serviceable. If a leak is detected at the shaft seal, the compressor must be replaced as a unit.

OPERATION

The compressor is driven by the engine through an electric clutch, drive pulley and belt arrangement. The compressor is lubricated by refrigerant oil that is circulated throughout the refrigerant system with the refrigerant.

The compressor draws in low-pressure refrigerant vapor from the evaporator through its suction port. It then compresses the refrigerant into a high-pressure, high-temperature refrigerant vapor. The compressor pumps high-pressure refrigerant vapor to the condenser through the compressor discharge port.

DIAGNOSIS AND TESTING - COMPRESSOR NOISE

Excessive noise while the A/C is being used, can be caused by loose mounts, loose clutch, or high operating pressure. Verify compressor drive belt condition, proper refrigerant charge and head pressure before compressor repair is performed.

If the A/C drive belt slips at initial start-up, it does not necessarily mean the compressor has failed.

With the close tolerances of a compressor it is possible to experience a temporary lockup. The longer the A/C system is inactive, the more likely the condition to occur.

This condition is the result of normal refrigerant movement within the A/C system caused by temperature changes. The refrigerant movement may wash the oil out of the compressor.

REMOVAL

The compressor may be removed from the mounting bracket and repositioned without disconnecting the refrigerant lines or discharging the refrigerant system. Discharging is not necessary if servicing the compressor clutch or clutch coil, the engine, the cylinder head or the generator.

WARNING: REVIEW THE WARNINGS AND CAUTIONS IN THE FRONT OF THIS GROUP BEFORE PERFORMING THE FOLLOWING OPERATION.

(1) Recover the refrigerant from the refrigerant system(Refer to 24 - HEATING & AIR CONDITIONING - STANDARD PROCEDURE).

(2) Disconnect and isolate the battery negative cable.

(3) Raise and support the vehicle.

(4) Remove the serpentine drive belt(Refer to 7 - COOLING/ACCESSORY DRIVE/DRIVE BELTS - REMOVAL), (Refer to 7 - COOLING/ACCESSORY DRIVE/DRIVE BELTS - REMOVAL) or (Refer to 7 - COOLING/ACCESSORY DRIVE/DRIVE BELTS - REMOVAL).

A/C COMPRESSOR (Continued)

(5) Disconnect the engine wire harness connectors from the compressor clutch coil connector and the high pressure cut out switch (Fig. 37) or (Fig. 39).

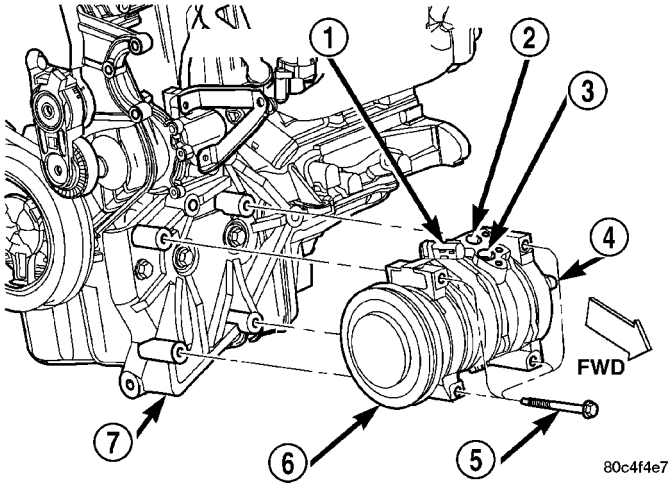

Fig. 37 A/C COMPRESSOR REMOVE/INSTALL

1 - CLUTCH COIL CONNECTOR
2 - DISCHARGE PORT
3 - SUCTION PORT
4 - HIGH PRESSURE CUT-OUT SWITCH
5 - SCREW
6 - COMPRESSOR
7 - BRACKET

(6) Remove the screw that secures the suction line fitting to the compressor suction port (Fig. 38).

(7) Disconnect the suction line fitting from the compressor suction port.

(8) Remove the rubber O-ring seal from the refrigerant line fitting of the suction line and discard.

(9) Install plugs in, or tape over the opened compressor suction port and the refrigerant line fitting of the suction line.

(10) Remove the screw that secures the discharge line fitting to the compressor discharge port.

(11) Disconnect the discharge line fitting from the compressor discharge port.

(12) Remove the rubber O-ring seal from the refrigerant line fitting of the discharge line and discard.

(13) Install plugs in, or tape over the opened compressor discharge port and the refrigerant line fitting of the discharge line.

(14) Remove the four screws that secure the compressor to the lower front strut-to-engine bracket.

(15) Remove the compressor from the engine compartment.

INSTALLATION

The compressor may be removed from the mounting bracket and repositioned without disconnecting the refrigerant lines or discharging the refrigerant system. Discharging is not necessary if servicing the compressor clutch or clutch coil, the engine, the cylinder head or the generator.

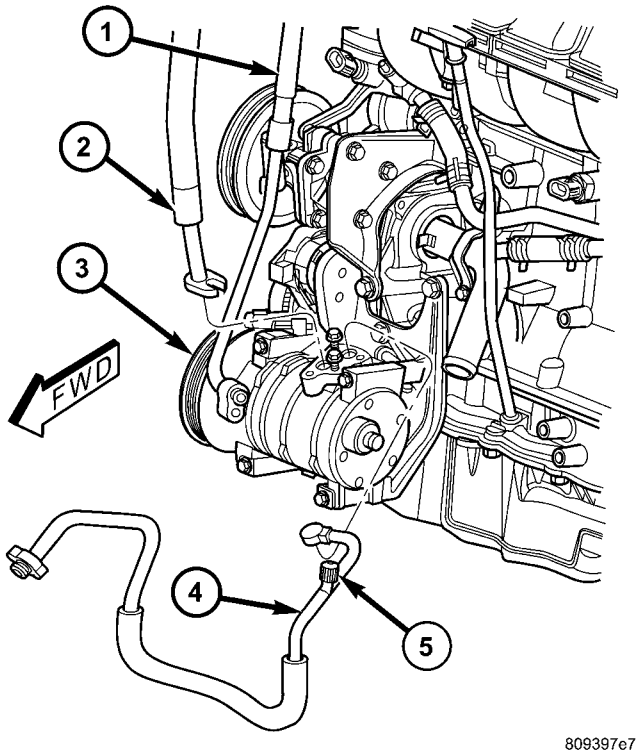

Fig. 38 A/C REFRIGERANT LINES - COMPRESSOR

1 - LIQUID LINE
2 - SUCTION LINE
3 - COMPRESSOR
4 - DISCHARGE LINE
5 - HIGH SIDE SERVICE PORT

WARNING: REVIEW THE WARNINGS AND CAUTIONS IN THE FRONT OF THIS GROUP BEFORE PERFORMING THE FOLLOWING OPERATION.

NOTE: If a replacement compressor is being installed, be certain to check the refrigerant oil level. See Refrigerant Oil Level in this group for the procedures. Use only refrigerant oil of the type recommended for the compressor in the vehicle.

(1) Position the compressor into the engine compartment.

(2) Install and tighten the four screws that secure the compressor to the lower front strut-to-engine bracket. Tighten the screws to 28.3 N·m (250 in. lbs.).

(3) Remove the tape or plugs from the compressor discharge port and the refrigerant line fitting of the discharge line.

(4) Lubricate a new rubber O-ring seal with clean refrigerant oil and install it on the refrigerant line fitting of the discharge line. Use only the specified O-rings as they are made of a special material for the

A/C COMPRESSOR (Continued)

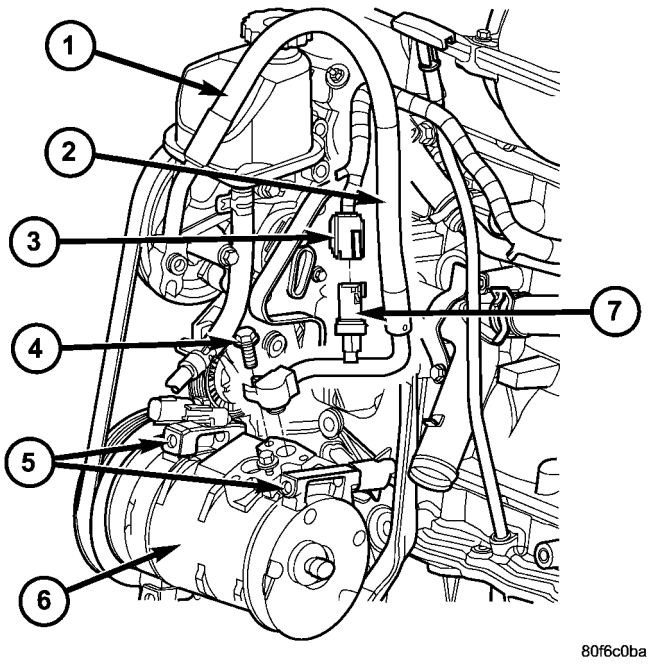

Fig. 39 A/C COMPRESSOR REMOVAL/ INSTALLATION- 2.4L TURBO

1 - Power Steering Fluid Tank
2 - A/C Discharge Line
3 - High Pressure Cutoff Switch Electrical Connector
4 - Discharge Line Connection Bolt
5 - A/C Compressor Mounting Bolts (4 total)
6 - A/C Compressor
7 - High Pressure Cutoff Switch / High Side Charging Port

R-134a system. Use only refrigerant oil of the type recommended for the compressor in the vehicle.

(5) Reconnect the discharge line fitting to the compressor discharge port.

(6) Install and tighten the screw that secures the discharge line fitting to the compressor discharge port. Tighten the screw to 12.2 N·m (108 in. lbs.).

(7) Remove the tape or plugs from the compressor suction port and the refrigerant line fitting of the suction line.

(8) Lubricate a new rubber O-ring seal with clean refrigerant oil and install it on the refrigerant line fitting of the suction line. Use only the specified O-rings as they are made of a special material for the R-134a system. Use only refrigerant oil of the type recommended for the compressor in the vehicle.

(9) Reconnect the suction line fitting to the compressor suction port.

(10) Install and tighten the screw that secures the suction line fitting to the compressor suction port. Tighten the screw to 12.2 N·m (108 in. lbs.).

(11) Reconnect the engine wire harness connectors to the compressor clutch coil connector and the high pressure cut out switch.

(12) Reinstall the serpentine drive belt(Refer to 7 - COOLING/ACCESSORY DRIVE/DRIVE BELTS - INSTALLATION), (Refer to 7 - COOLING/ACCESSORY DRIVE/DRIVE BELTS - INSTALLATION) or (Refer to 7 - COOLING/ACCESSORY DRIVE/DRIVE BELTS - INSTALLATION).

(13) Lower the vehicle.

(14) Reconnect the battery negative cable.

(15) Evacuate the refrigerant system(Refer to 24 - HEATING & AIR CONDITIONING - STANDARD PROCEDURE).

(16) Charge the refrigerant system(Refer to 24 - HEATING & AIR CONDITIONING - STANDARD PROCEDURE).

A/C CONDENSER

DESCRIPTION

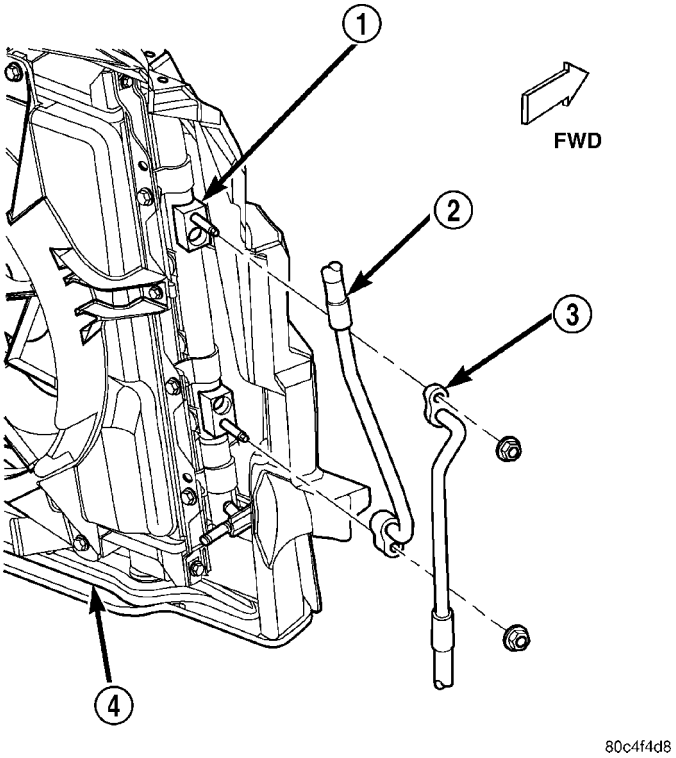

Fig. 40 A/C REFRIGERANT LINES - CONDENSER

1 - CONDENSER
2 - LIQUID LINE
3 - DISCHARGE LINE
4 - COOLING MODULE

The condenser (Fig. 40) is integral to a cooling module which includes the radiator, the electric cooling fan, the fan shroud, air seals and an automatic transmission oil cooler on models so equipped. The cooling module is located in the air flow in the front of the engine compartment behind the front grille.

A/C CONDENSER (Continued)

The condenser cannot be repaired or adjusted and, if faulty or damaged, it must be replaced. The cooling module must be removed from the vehicle in order to access the condenser for service.

OPERATION

The condenser is a heat exchanger that allows the high-pressure refrigerant gas being discharged by the compressor to give up its heat to the air passing over the condenser fins. When the refrigerant gas gives up its heat, it condenses. When the refrigerant leaves the condenser, it has become a high-pressure liquid refrigerant.

The volume of air flowing over the condenser fins is critical to the proper cooling performance of the air conditioning system. Therefore, it is important that there are no objects placed in front of the radiator grille openings in the front of the vehicle or foreign material on the condenser fins that might obstruct proper air flow. Also, any factory-installed air seals or shrouds must be properly reinstalled following radiator or condenser service.

REMOVAL

The condenser is located in front of the engine radiator. It has no serviceable parts. If damaged or leaking, the condenser assembly must be replaced.

WARNING: THE REFRIGERANT MUST BE REMOVED FROM THE SYSTEM BEFORE REMOVING THE CONDENSER.

(1) Using a R-134a refrigerant recovery machine, remove the refrigerant from the A/C system(Refer to 24 - HEATING & AIR CONDITIONING - STANDARD PROCEDURE)

(2) Remove battery support strut.

(3) Remove refrigerant lines from condenser (Refer to 24 - HEATING & AIR CONDITIONING/PLUMBING/LIQUID LINE - REMOVAL) and (Refer to 24 - HEATING & AIR CONDITIONING/PLUMBING/SUCTION LINE - REMOVAL). (Fig. 41).

(4) Remove upper radiator mounts.

(5) Remove condenser to radiator mounting screws.

(6) Tilt radiator back and remove condenser.

INSTALLATION

The condenser is located in front of the engine radiator. It has no serviceable parts. If damaged or leaking, the condenser assembly must be replaced.

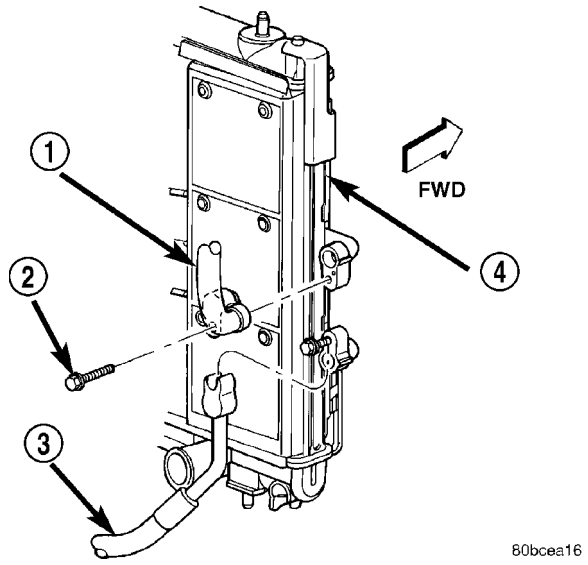

Fig. 41 CONDENSER REFRIGERANT LINES

1 - LIQUID LINE
2 - A/C LINE MOUNTING BOLTS
3 - DISCHARGE LINE
4 - CONDENSER

(1) Tilt the radiator back and position the condenser in the vehicle.

(2) Install the condenser to radiator mounting screws.

(3) Install the upper radiator mounts.

(4) Install the refrigerant lines to the condenser (Refer to 24 - HEATING & AIR CONDITIONING/PLUMBING/A/C DISCHARGE LINE - INSTALLATION) and (Refer to 24 - HEATING & AIR CONDITIONING/PLUMBING/LIQUID LINE - INSTALLATION).

(5) Install the battery support strut.

(6) Tighten the condenser refrigerant lines to 5 N·m (45 in lbs).

(7) Evacuate the refrigerant system (Refer to 24 - HEATING & AIR CONDITIONING - STANDARD PROCEDURE).

(8) Recharge the A/C system(Refer to 24 - HEATING & AIR CONDITIONING - STANDARD PROCEDURE)

A/C DISCHARGE LINE

DESCRIPTION - DISCHARGE LINE

The discharge line is the line that goes from the compressor to the condenser (Fig. 42) or (Fig. 43). It has no serviceable parts except the rubber O-rings. If the line is found to be leaking or is damaged it must be replaced as an assembly.

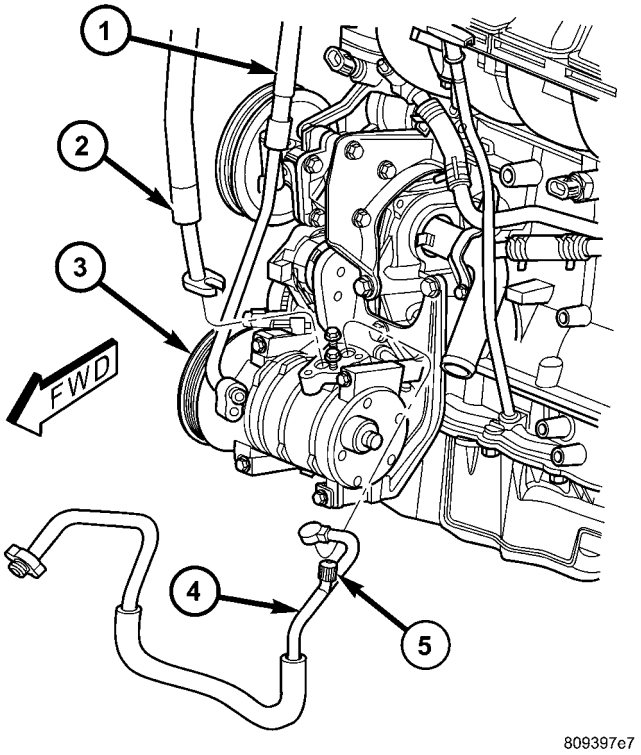

Fig. 42 A/C REFRIGERANT LINES - COMPRESS

1 - LIQUID LINE
2 - SUCTION LINE
3 - COMPRESSOR
4 - DISCHARGE LINE
5 - HIGH SIDE SERVICE PORT

REMOVAL

WARNING: THE REFRIGERANT SYSTEM MUST BE RECOVERED BEFORE SERVICING ANY PART OF THE REFRIGERANT SYSTEM.

(1) Using a R-134a refrigerant recovery machine, remove the refrigerant from the A/C system(Refer to 24 - HEATING & AIR CONDITIONING - STANDARD PROCEDURE)

(2) From the top side of the vehicle, remove line at compressor (Fig. 44).

(3) From the bottom side of the vehicle, remove line at condenser.

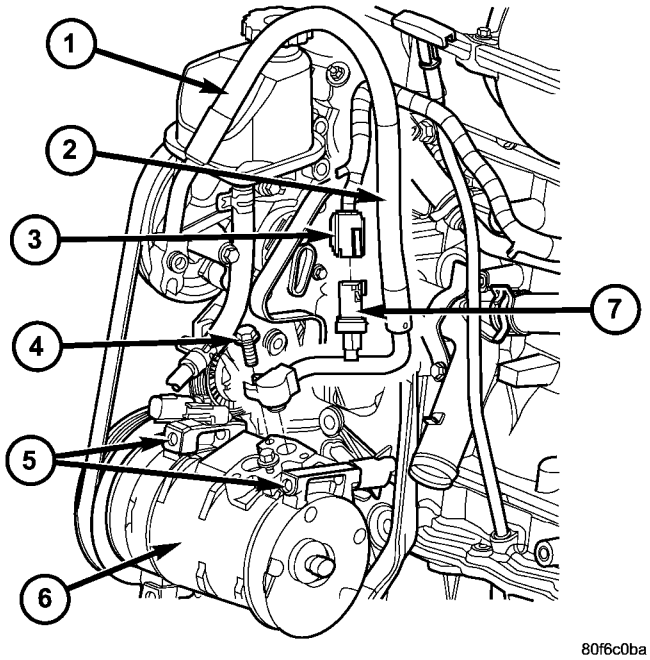

Fig. 43 A/C COMPRESSOR REMOVAL/ INSTALLATION - 2.4L TURBO

1 - Power Steering Fluid Tank
2 - A/C Discharge Line
3 - High Pressure Cutoff Switch Electrical Connector
4 - Discharge Line Connection Bolt
5 - A/C Compressor Mounting Bolts (4 total)
6 - A/C Compressor
7 - High Pressure Cutoff Switch / High Side Charging Port

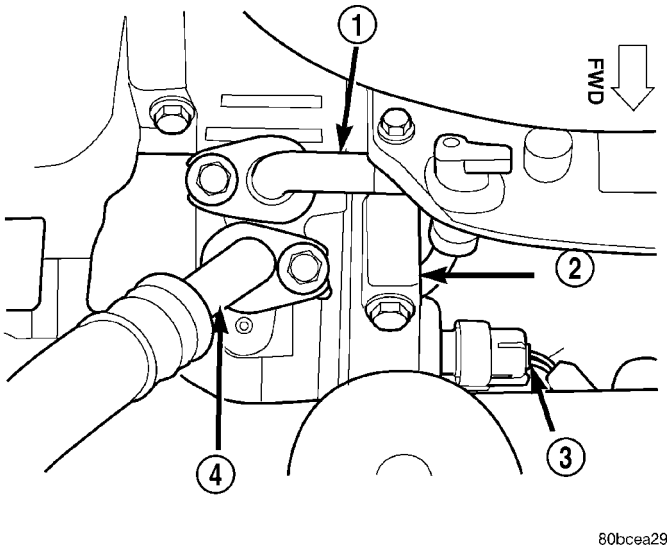

Fig. 44 HIGH PRESSURE CUT OUT SWITCH

1 - DISCHARGE LINE
2 - A/C COMPRESSOR
3 - HIGH PRESSURE CUT OUT SWITCH
4 - SUCTION LINE

A/C DISCHARGE LINE (Continued)

INSTALLATION

WARNING: THE REFRIGERANT SYSTEM MUST BE RECOVERED BEFORE SERVICING ANY PART OF THE REFRIGERANT SYSTEM.

(1) Position the A/C discharge line in the vehicle and install the condenser end. Tighten the connections to 12 N·m (108 in. lbs.)

(2) Lower the vehicle and install the compressor end of the discharge line. Tighten the connections to 12 N·m (108 in. lbs.)

(3) Evacuate the refrigerant system (Refer to 24 - HEATING & AIR CONDITIONING - STANDARD PROCEDURE).

(4) Recharge the A/C system(Refer to 24 - HEATING & AIR CONDITIONING - STANDARD PROCEDURE).

A/C EVAPORATOR

REMOVAL

WARNING: ON VEHICLES EQUIPPED WITH AIRBAGS, REFER TO PASSIVE RESTRAINT SYSTEMS BEFORE ATTEMPTING ANY STEERING WHEEL, STEERING COLUMN, OR INSTRUMENT PANEL COMPONENT DIAGNOSIS OR SERVICE. FAILURE TO TAKE THE PROPER PRE-CAUTIONS COULD RESULT IN ACCIDENTAL AIR-BAG DEPLOYMENT AND POSSIBLE PERSONAL INJURY.

WARNING: DO NOT OPEN THE RADIATOR DRAINCOCK OR DISCONNECT COOLANT HOSES WHEN THE COOLING SYSTEM IS HOT AND UNDER PRESSURE. SERIOUS BURNS FROM COOLANT CAN OCCUR.

WARNING: READ ALL SAFETY PRECAUTIONS AND WARNINGS BEFORE PROCEEDING WITH THIS OPERATION.

(1) Disconnect the negative battery cable.

(2) Drain the cooling system (Refer to 7 - COOLING - STANDARD PROCEDURE).

(3) Evacuate the refrigerant system (Refer to 24 - HEATING & AIR CONDITIONING - STANDARD PROCEDURE).

(4) Remove the instrument panel (Refer to 23 - BODY/INSTRUMENT PANEL/INSTRUMENT PANEL ASSEMBLY - REMOVAL).

(5) Remove the refrigerant lines from the evaporator (Refer to 24 - HEATING & AIR CONDITIONING/PLUMBING/A/C DISCHARGE LINE - REMOVAL) and (Refer to 24 - HEATING & AIR CONDITIONING/PLUMBING/LIQUID LINE - REMOVAL).

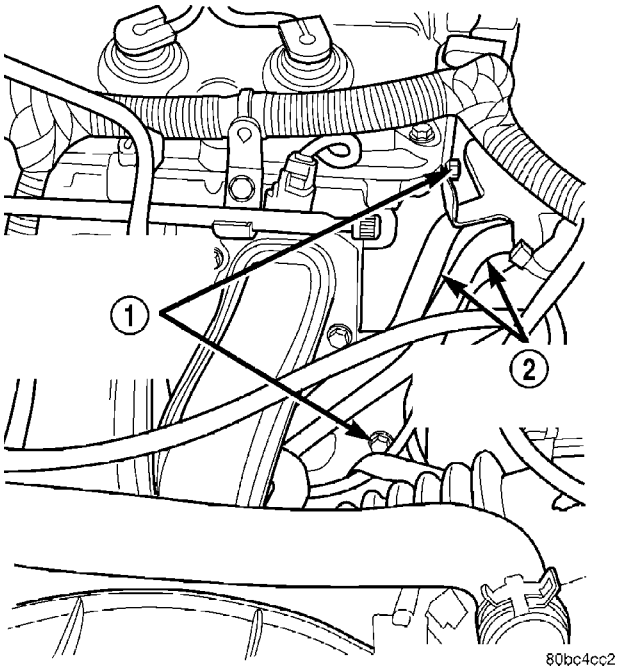

Fig. 45 HEATER CORE COOLANT SUPPLY LINES

1 - HEATER CORE COOLANT LINE SUPPORT BRACKET BOLTS
2 - HEATER CORE COOLANT SUPPLY LINES

(6) Remove the heater core coolant supply hoses from the heater core (Fig. 45).

(7) Working from inside the engine compartment, remove the A/C-Heater housing retaining fasteners from the bulkhead (Refer to 24 - HEATING & AIR CONDITIONING/DISTRIBUTION/HVAC HOUSING - REMOVAL).

(8) Remove the A/C-Heater housing drain tube. Remove the spring clip and pull the hose from the housing nipple.

(9) Working from inside the vehicle, remove the defroster duct from the A/C-Heater housing and body attachment point.

(10) Remove the A/C-Heater housing retaining bolts.

(11) Disconnect the electrical connectors from the A/C-Heater housing.

(12) Remove the A/C-Heater housing from the vehicle and place the assembly on a bench (Refer to 24 - HEATING & AIR CONDITIONING/DISTRIBUTION/HVAC HOUSING - REMOVAL).

(13) Remove the heater core cover from the housing assembly.

(14) Remove the coolant lines from the heater core.

(15) Remove the screws necessary to disassemble the A/C-Heater housing assembly (Refer to 24 - HEATING & AIR CONDITIONING/DISTRIBUTION/HVAC HOUSING - DISASSEMBLY).

A/C EVAPORATOR (Continued)

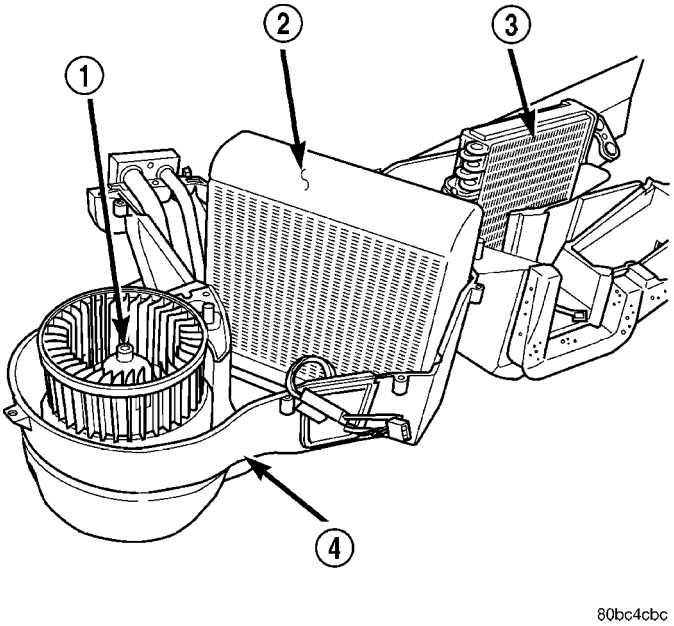

Fig. 46 A/C - HEATER HOUSING

1 - BLOWER MOTOR
2 - EVAPORATOR COIL
3 - HEATER CORE
4 - A/C - HEATER HOUSING

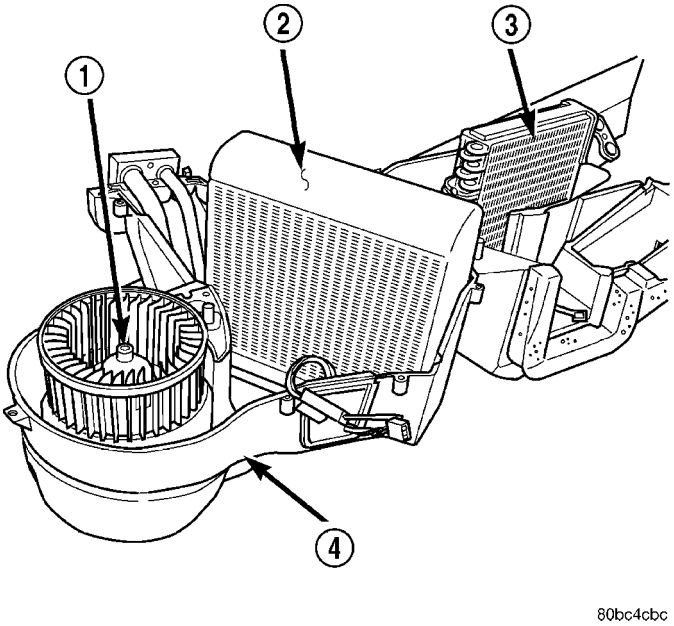

Fig. 47 A/C - HEATER HOUSING

1 - BLOWER MOTOR
2 - EVAPORATOR COIL
3 - HEATER CORE
4 - A/C - HEATER HOUSING

(16) Remove the evaporator coil from the A/C-Heater housing (Fig. 46).

INSTALLATION

NOTE: When the evaporator coil is replaced, some refrigerant oil will remain in the old evaporator. This oil must be replaced before the system is operated.

(1) Install the evaporator coil in the A/C-Heater housing (Fig. 47). Be certain all seals are replaced in there original positions.

(2) Reassemble the A/C-Heater housing (Refer to 24 - HEATING & AIR CONDITIONING/DISTRIBUTION/HVAC HOUSING - ASSEMBLY).

(3) Install the housing in the vehicle and install the retaining bolts. Torque the bolts to 20 N·m (177 in. lbs.) (Refer to 24 - HEATING & AIR CONDITIONING/DISTRIBUTION/HVAC HOUSING - INSTALLATION).

(4) Connect the electrical connectors on the A/C-Heater housing.

(5) Install the defroster duct on the A/C-Heater housing and secure at the body attachment point.

(6) Working from inside the engine compartment, install the A/C-Heater housing drain tube and retaining clip.

(7) Install the A/C-Heater housing retaining fasteners. Torque the fasteners to 20 N·m (177 in. lbs.).

(8) Install the heater core coolant supply hoses on the heater core (Fig. 48).

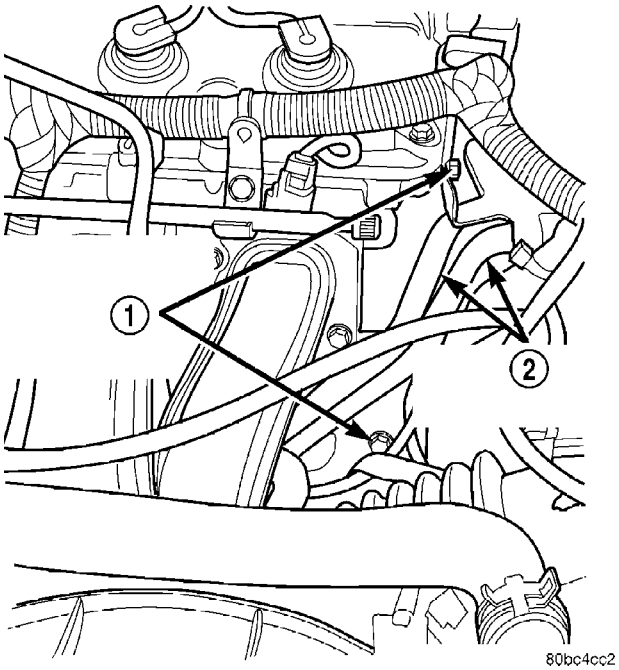

Fig. 48 HEATER CORE COOLANT SUPPLY LINES

1 - HEATER CORE COOLANT LINE SUPPORT BRACKET BOLTS
2 - HEATER CORE COOLANT SUPPLY LINES

(9) Install the refrigerant lines and retaining clips.

CAUTION: Be certain the refrigerant line sealing O-rings are well lubricated and free of tears.

A/C EVAPORATOR (Continued)

(10) Install the instrument panel (Refer to 23 - BODY/INSTRUMENT PANEL/INSTRUMENT PANEL ASSEMBLY - INSTALLATION).

(11) Evacuate the refrigerant system (Refer to 24 - HEATING & AIR CONDITIONING - STANDARD PROCEDURE).

(12) Charge the refrigerant system (Refer to 24 - HEATING & AIR CONDITIONING - STANDARD PROCEDURE).

(13) Fill the cooling system (Refer to 7 - COOLING - STANDARD PROCEDURE).

(14) Connect the negative battery cable.

A/C HIGH PRESSURE RELIEF VALVE

REMOVAL - HIGH PRESSURE RELIEF VALVE

WARNING: AVOID BREATHING A/C REFRIGERANT AND LUBRICANT VAPOR OR MIST. EXPOSURE MAY IRRITATE EYES, NOSE AND THROAT. USE ONLY APPROVED SERVICE EQUIPMENT MEETING SAE REQUIREMENTS TO DISCHARGE R-134a SYSTEM. IF ACCIDENTAL SYSTEM DISCHARGE OCCURS, VENTILATE WORK AREA BEFORE RESUMING SERVICE.
R-134a SERVICE EQUIPMENT OR VEHICLE A/C SYSTEM SHOULD NOT BE PRESSURE TESTED OR LEAK TESTED WITH COMPRESSED AIR. MIXTURE OF AIR and R-134a CAN BE COMBUSTIBLE AT ELEVATED PRESSURES. THESE MIXTURES ARE POTENTIALLY DANGEROUS AND MAY RESULT IN FIRE OR EXPLOSION CAUSING INJURY OR PROPERTY DAMAGE.

(1) Using a R-134a refrigerant recovery machine, remove the refrigerant from A/C system (Refer to 24 - HEATING & AIR CONDITIONING - STANDARD PROCEDURE).

(2) Rotate the high pressure relief valve counterclockwise and separate relief valve from the compressor.

INSTALLATION - HIGH PRESSURE RELIEF VALVE

WARNING: AVOID BREATHING A/C REFRIGERANT AND LUBRICANT VAPOR OR MIST. EXPOSURE MAY IRRITATE EYES, NOSE AND THROAT. USE ONLY APPROVED SERVICE EQUIPMENT MEETING SAE REQUIREMENTS TO DISCHARGE R-134a SYSTEM. IF ACCIDENTAL SYSTEM DISCHARGE OCCURS, VENTILATE WORK AREA BEFORE RESUMING SERVICE.
R-134a SERVICE EQUIPMENT OR VEHICLE A/C SYSTEM SHOULD NOT BE PRESSURE TESTED OR LEAK TESTED WITH COMPRESSED AIR. MIXTURE OF AIR and R-134a CAN BE COMBUSTIBLE AT ELEVATED PRESSURES. THESE MIXTURES ARE POTENTIALLY DANGEROUS AND MAY RESULT IN FIRE OR EXPLOSION CAUSING INJURY OR PROPERTY DAMAGE.

(1) Install a new O-ring.

(2) Position and rotate the compressor high pressure relief valve clockwise to install

(3) Evacuate the refrigerant system (Refer to 24 - HEATING & AIR CONDITIONING - STANDARD PROCEDURE).

(4) Recharge the A/C system(Refer to 24 - HEATING & AIR CONDITIONING - STANDARD PROCEDURE)

ACCUMULATOR

DESCRIPTION

The accumulator (Fig. 49) is mounted in the engine compartment between the evaporator outlet and the compressor suction port. An integral mounting bracket is used to secure the accumulator to the right side rail with a screw. Two connectors of the suction and liquid line assembly are sealed to an integral connector block on the top of the accumulator canister with rubber O-ring seals and secured there with two screws. A threaded fitting on the top of the accumulator canister provides the port through which the low pressure clutch cycling switch monitors the refrigerant system pressures.

The accumulator cannot be repaired and, if faulty or damaged, it must be replaced. The suction and liquid line assembly, the rubber O-rings and the low pressure clutch cycling switch are available for service replacement.

OPERATION

Refrigerant enters the accumulator canister as a low pressure vapor through the inlet tube. Any liquid, oil-laden refrigerant falls to the bottom of the canister, which acts as a separator. A desiccant bag located inside the accumulator canister absorbs any moisture which may have entered and become trapped within the refrigerant system.

REMOVAL

WARNING: REVIEW THE WARNINGS AND CAUTIONS IN THE FRONT OF THIS GROUP BEFORE PERFORMING THE FOLLOWING OPERATION.

(1) Recover the refrigerant from the refrigerant system. Refer to **Refrigerant Recovery** in this group for the proper procedures.

ACCUMULATOR (Continued)

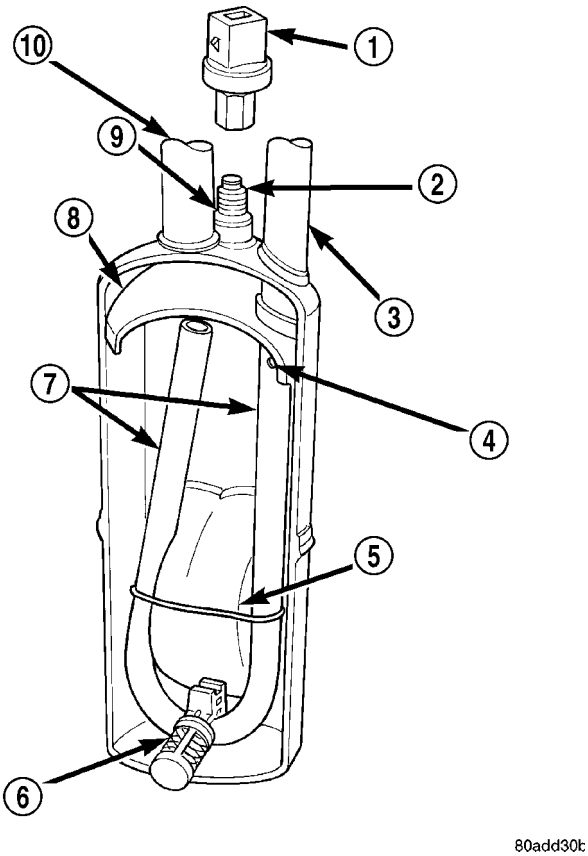

Fig. 49 ACCUMULATOR - TYPICAL

1 - LOW PRESSURE CYCLING CLUTCH SWITCH
2 - PRESSURE SWITCH FITTING
3 - OUTLET TO COMPRESSOR
4 - ANTI-SIPHON HOLE
5 - DESICCANT BAG
6 - OIL RETURN ORIFICE FILTER
7 - VAPOR RETURN TUBE
8 - ACCUMULATOR DOME
9 - O-RING SEAL
10 - INLET FROM EVAPORATOR

(2) Disconnect and isolate the battery negative cable.

(3) If the vehicle is so equipped, relocate the vehicle speed control servo as necessary to access the accumulator. Refer to **Vehicle Speed Control System** for the proper procedures.

(4) Remove the low pressure clutch cycling switch from the accumulator. Refer to **Low Pressure Clutch Cycling Switch** in this group for the proper procedures.

(5) Remove the two screws that secure the two refrigerant line fittings of the suction and liquid line assembly to the accumulator connector block inlet and outlet ports (Fig. 50).

(6) Disconnect the two refrigerant line fittings of the suction and liquid line assembly from the accumulator connector block inlet and outlet ports.

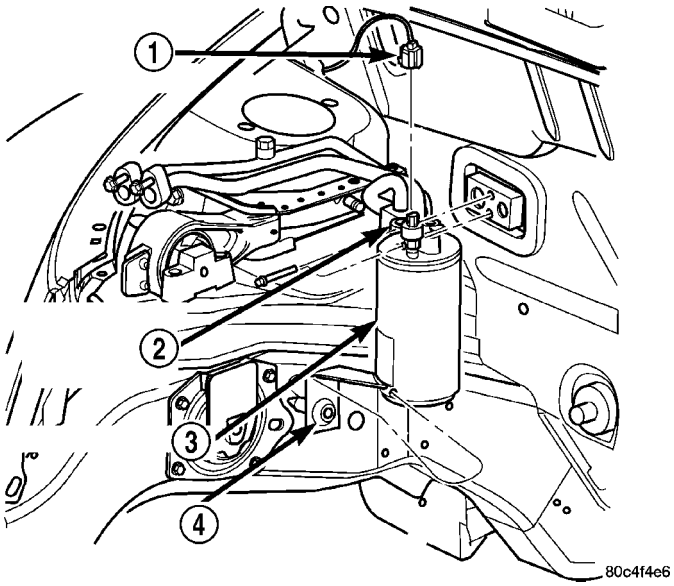

Fig. 50 Accumulator Remove/Install - LHD shown (typical RHD)

1 - WIRE HARNESS CONNECTOR
2 - SUCTION AND LIQUID LINE ASSEMBLY
3 - ACCUMULATOR
4 - SCREW

(7) Remove the rubber O-ring seal from the refrigerant line fittings of the suction and liquid line assembly and discard.

(8) Install plugs in, or tape over the opened accumulator connector block inlet and outlet ports and the refrigerant line fittings of the suction and liquid line assembly.

(9) Remove the screw that secures the accumulator mounting bracket to the right side rail.

(10) Remove the accumulator from the engine compartment.

INSTALLATION

WARNING: REVIEW THE WARNINGS AND CAUTIONS IN THE FRONT OF THIS GROUP BEFORE PERFORMING THE FOLLOWING OPERATION.

(1) Position the accumulator into the engine compartment.

(2) Install and tighten the screw that secures the accumulator mounting bracket to the right side rail. Tighten the screw to 11.3 N·m (100 in. lbs.).

(3) Remove the tape or plugs from the accumulator connector block inlet and outlet ports and the refrigerant line fittings of the suction and liquid line assembly.

(4) Lubricate new rubber O-ring seals with clean refrigerant oil and install them on the refrigerant line fittings of the suction and liquid line assembly. Use only the specified O-rings as they are made of a

ACCUMULATOR (Continued)

special material for the R-134a system. Use only refrigerant oil of the type recommended for the compressor in the vehicle.

(5) Reconnect the refrigerant line fittings of the suction and liquid line assembly to the accumulator connector block inlet and outlet ports.

(6) Install and tighten the two screws that secure the two refrigerant line fittings of the suction and liquid line assembly to the accumulator connector block inlet and outlet ports. Tighten the screws to 2.3 N·m (20 in. lbs.).

(7) Reinstall the low pressure clutch cycling switch onto the accumulator(Refer to 24 - HEATING & AIR CONDITIONING/CONTROLS/A/C LOW PRESSURE SWITCH - INSTALLATION).

(8) If the vehicle is so equipped, reinstall the vehicle speed control servo. Refer to **Vehicle Speed Control System** for the proper procedures.

(9) Reconnect the battery negative cable.

(10) Evacuate the refrigerant system(Refer to 24 - HEATING & AIR CONDITIONING - STANDARD PROCEDURE).

NOTE: If the accumulator is replaced, add 89 milliliters (3 fluid ounces) of refrigerant oil to the refrigerant system. Use only refrigerant oil of the type recommended for the compressor in the vehicle.

(11) Charge the refrigerant system(Refer to 24 - HEATING & AIR CONDITIONING - STANDARD PROCEDURE).

CONDENSATION DRAIN TUBE

DESCRIPTION

Condensation that accumulates in the evaporator housing is drained by a tube through the dash and on to the ground. This tube must be kept open to prevent condensate water from collecting in the bottom of the housing.

The tapered end of the drain tube is designed to keep contaminants from entering the heater A/C unit housing. If the tube is pinched or blocked, condensate cannot drain, causing water to back up and spill into the passenger compartment. It is normal to see condensate drainage below the vehicle. If the tube is damaged, it should be replaced.

REMOVAL

(1) Raise vehicle on a suitable lift.

(2) Locate rubber drain tube on right side of dash panel under the hood (Fig. 51).

(3) Squeeze clamp and remove drain tube.

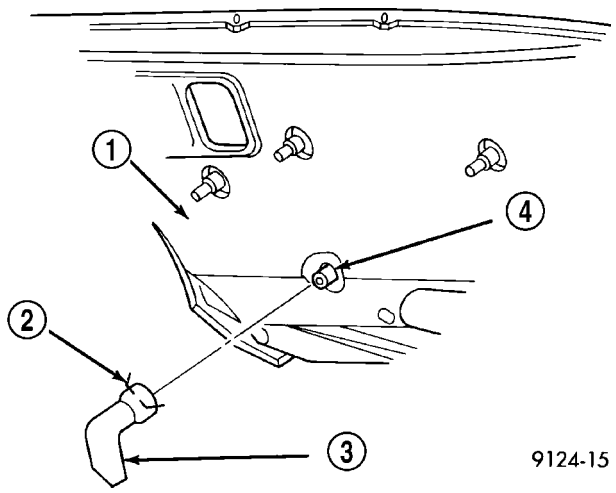

Fig. 51 Condensate Water Drain Tube –typical

1 - DASH PANEL (UNDER HOOD RIGHT SIDE)
2 - CLAMP
3 - CONDENSATE DRAIN TUBE
4 - NIPPLE-A/C HEATER HOUSING

INSTALLATION

(1) Squeeze the retaining clamp and install the tube over the nipple.

(2) Lower the vehicle.

HEATER CORE - EXPORT

DESCRIPTION

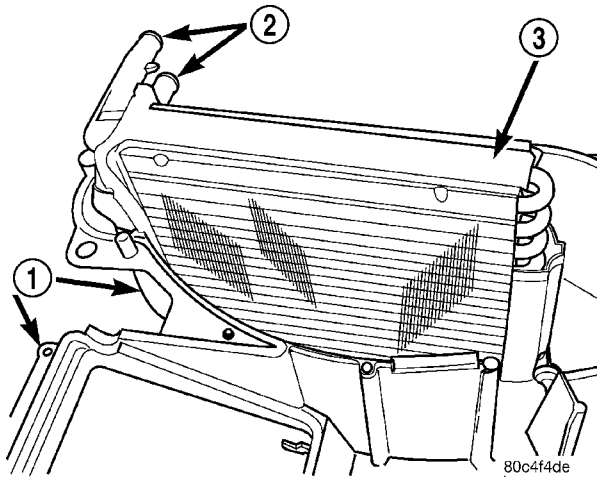

Fig. 52 HEATER CORE

1 - LOWER HEATER-A/C UNIT HOUSING
2 - HEATER CORE HOSE NIPPLES
3 - HEATER CORE

The heater core (Fig. 52) is located in the heater-A/C unit housing, under the instrument panel. It is a heat exchanger made of rows of tubes and fins. One end of the core is fitted with a molded plastic tank that includes the integral heater core hose nipples.

HEATER CORE - EXPORT (Continued)

OPERATION

Engine coolant is circulated through heater hoses to the heater core at all times. As the coolant flows through the heater core, heat removed from the engine is transferred to the heater core fins and tubes. Air directed through the heater core picks up the heat from the heater core fins. The blend air door allows control of the heater output air temperature by controlling how much of the air flowing through the heater-A/C housing is directed through the heater core. The blower motor speed controls the volume of air flowing through the heater-A/C housing.

The heater core cannot be repaired and, if faulty or damaged, it must be replaced. Refer to Cooling System for more information on the engine cooling system, the engine coolant and the heater hoses.

REMOVAL

WARNING: ON VEHICLES EQUIPPED WITH AIRBAGS, REFER TO PASSIVE RESTRAINT SYSTEMS BEFORE ATTEMPTING ANY STEERING WHEEL, STEERING COLUMN, OR INSTRUMENT PANEL COMPONENT DIAGNOSIS OR SERVICE. FAILURE TO TAKE THE PROPER PRE-CAUTIONS COULD RESULT IN ACCIDENTAL AIR-BAG DEPLOYMENT AND POSSIBLE PERSONAL INJURY.

WARNING: DO NOT OPEN THE RADIATOR DRAINCOCK OR DISCONNECT COOLANT HOSES WHEN THE SYSTEM IS HOT AND UNDER PRESSURE. SERIOUS BURNS FROM COOLANT CAN OCCUR.

(1) Disconnect the negative battery cable.

(2) Drain the cooling system (Refer to 7 - COOLING - STANDARD PROCEDURE).

(3) Evacuate the refrigerant system (Refer to 24 - HEATING & AIR CONDITIONING - STANDARD PROCEDURE).

(4) Remove the instrument panel (Refer to 23 - BODY/INSTRUMENT PANEL/INSTRUMENT PANEL ASSEMBLY - REMOVAL).

(5) Remove the refrigerant lines from the evaporator core.

(6) Remove the heater core coolant supply hoses from the heater core.

(7) Working from inside the engine compartment, remove the A/C-Heater housing retaining fasteners from the bulkhead.

(8) Remove the A/C-Heater housing drain tube. Remove the spring clip and pull the hose from the housing nipple.

(9) Working from inside the vehicle, remove the defroster duct from the A/C-Heater housing and body attachment point.

(10) Remove the A/C-Heater housing retaining bolts.

(11) Disconnect the electrical connectors from the A/C-Heater housing.

(12) Remove the A/C-Heater housing from the vehicle and place the assembly on a bench.

(13) Remove the heater core from the housing assembly(Refer to 24 - HEATING & AIR CONDITIONING/DISTRIBUTION/HVAC HOUSING - DISASSEMBLY).

(14) Remove the heater core coolant lines from the heater core (Fig. 53).

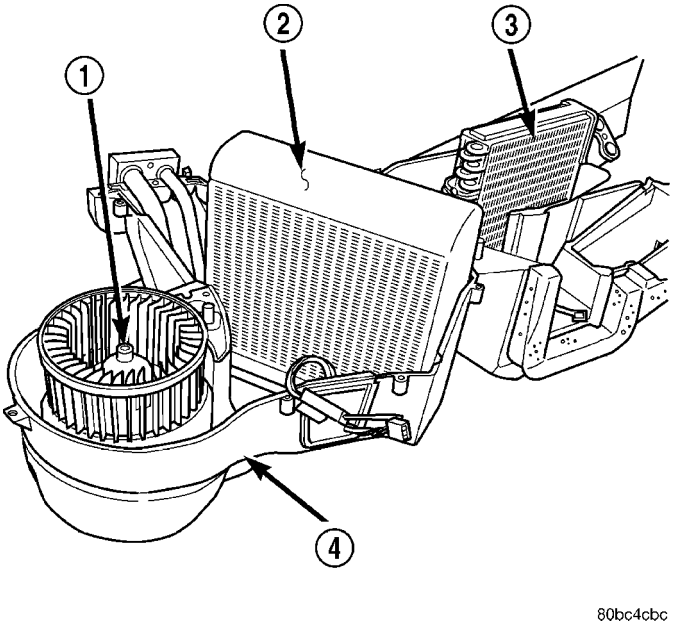

Fig. 53 A/C - HEATER HOUSING

1 - BLOWER MOTOR
2 - EVAPORATOR COIL
3 - HEATER CORE
4 - A/C - HEATER HOUSING

HEATER CORE - EXPORT (Continued)

INSTALLATION

(1) Install the heater core in the A/C-Heater housing (Fig. 54).

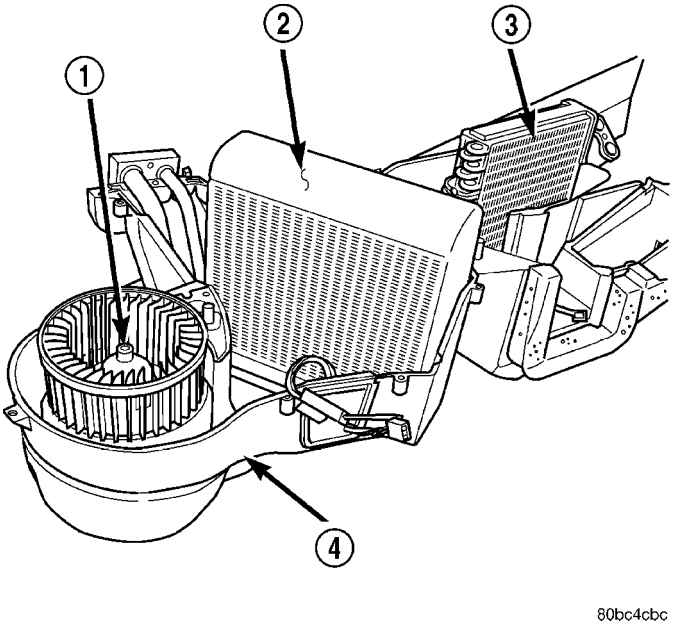

Fig. 54 A/C - HEATER HOUSING

1 - BLOWER MOTOR
2 - EVAPORATOR COIL
3 - HEATER CORE
4 - A/C - HEATER HOUSING

(2) Reassemble the A/C-Heater housing (Refer to 24 - HEATING & AIR CONDITIONING/DISTRIBUTION/HVAC HOUSING - ASSEMBLY).

(3) Install the housing in the vehicle and install the retaining bolts. Torque the bolts to 20 N·m (177 in. lbs.).

(4) Connect the electrical connectors on the A/C-Heater housing.

(5) Install the defroster duct on the A/C-Heater housing and secure at the body attachment point.

(6) Install the A/C-Heater housing drain tube and retaining clip.

(7) Install the A/C-Heater housing retaining fasteners. Torque the fasteners to 20 N·m (177 in. lbs.).

(8) Install the heater core coolant supply hoses on the heater core (Fig. 55).

CAUTION: Be certain the refrigerant line sealing O-rings are well lubricated and free of tears.

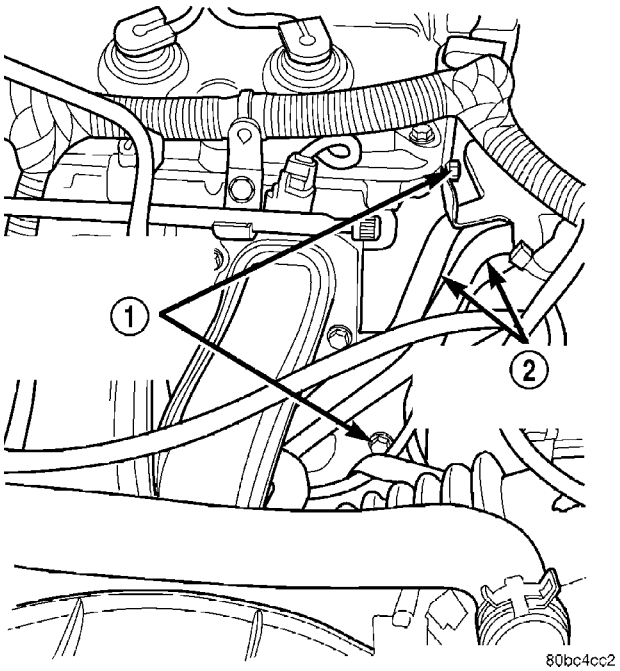

Fig. 55 HEATER CORE COOLANT SUPPLY LINES

1 - HEATER CORE COOLANT LINE SUPPORT BRACKET BOLTS
2 - HEATER CORE COOLANT SUPPLY LINES

(9) Install the refrigerant lines(Refer to 24 - HEATING & AIR CONDITIONING/PLUMBING/LIQUID LINE - INSTALLATION) and (Refer to 24 - HEATING & AIR CONDITIONING/PLUMBING/SUCTION LINE - INSTALLATION).

(10) Install the instrument panel (Refer to 23 - BODY/INSTRUMENT PANEL/INSTRUMENT PANEL ASSEMBLY - INSTALLATION).

(11) Evacuate the refrigerant system (Refer to 24 - HEATING & AIR CONDITIONING - STANDARD PROCEDURE).

(12) Charge the refrigerant system (Refer to 24 - HEATING & AIR CONDITIONING - STANDARD PROCEDURE).

(13) Fill the cooling system (Refer to 7 - COOLING - STANDARD PROCEDURE).

(14) Connect the negative battery cable.

HEATER INLET HOSE

REMOVAL

CAUTION:
When removing hoses from heater core inlet or outlet nipples DO NOT exert excess pressure. The heater core may become damaged and leak engine coolant.

NOTE: Review Cooling System Precautions before proceeding with this operation.

(1) Drain engine cooling system.
(2) Using spring tension clamp pliers (or equalivent), remove clamps at end of heater hose to be removed (Fig. 56) or (Fig. 57).

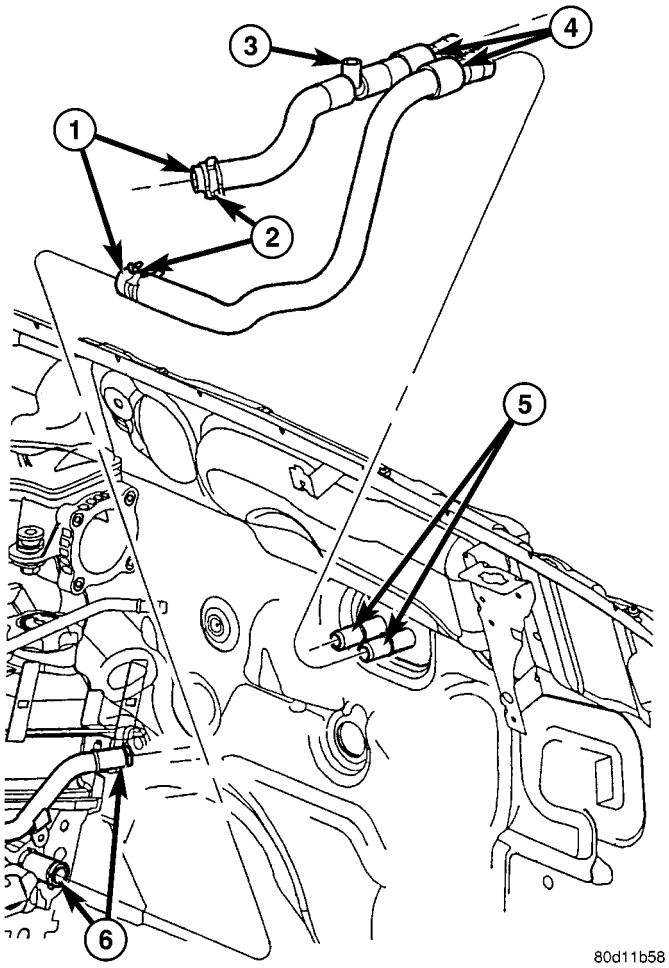

Fig. 56 HEATER HOSE ASSEMBLY- RHD 1.6L

1 - Heater Hoses
2 - Heater Hose Clamps
3 - Bleeder Assembly
4 - Heater Hose Retainers
5 - Heater Core Connections
6 - Engine Heater Pipes

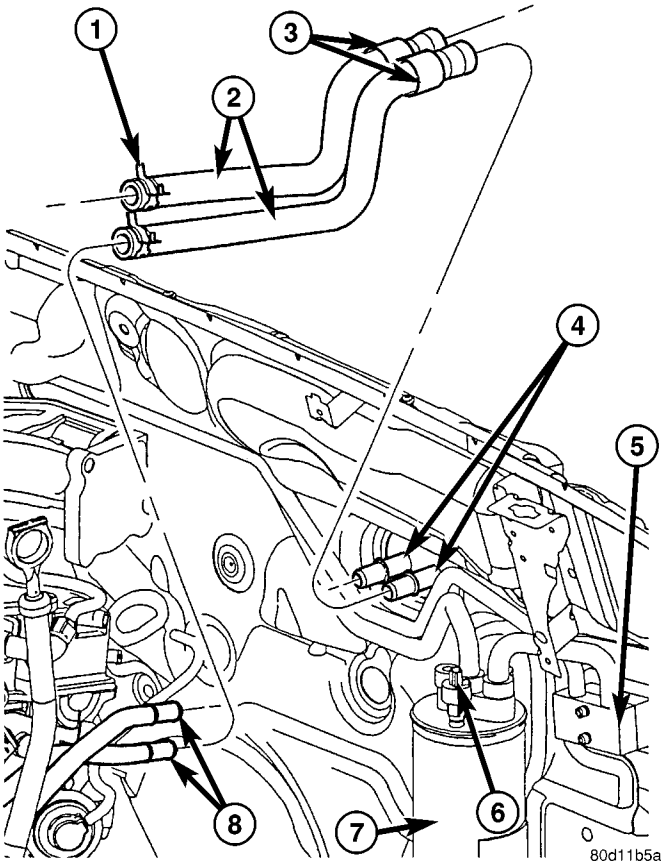

Fig. 57 HEATER HOSE ASSEMBLY-RHD 2.0L

1 - Heater Hose Clamps
2 - Heater Hoses
3 - Heater Hose Retainers
4 - Heater Core Connections
5 - H-Block
6 - Low Pressure Switch
7 - Filter Drier
8 - Engine Heater Pipes

(3) Carefully rotate hose back and forth while pulling away from connector nipple.

INSTALLATION

CAUTION: When removing hoses from heater core inlet or outlet nipples DO NOT exert excess pressure. The heater core may become damaged and leak engine coolant.

NOTE: Review Cooling System Precautions before proceeding with this operation.

(1) Using spring tension clamp pliers, install the hose ends into position.
(2) Refill the cooling system(Refer to 7 - COOLING - STANDARD PROCEDURE)

HEATER RETURN HOSE

REMOVAL

CAUTION: When removing hoses from the heater core inlet nipples DO NOT exert excessive pressure. The heater core may become damaged and leak engine coolant.

NOTE: Review Cooling System Precautions before proceeding with this operation.

(1) Drain engine cooling system.

(2) Using spring tension clamp pliers (or equalivent), remove the clamps at the end of the heater hoses to be removed (Fig. 58) or (Fig. 59)

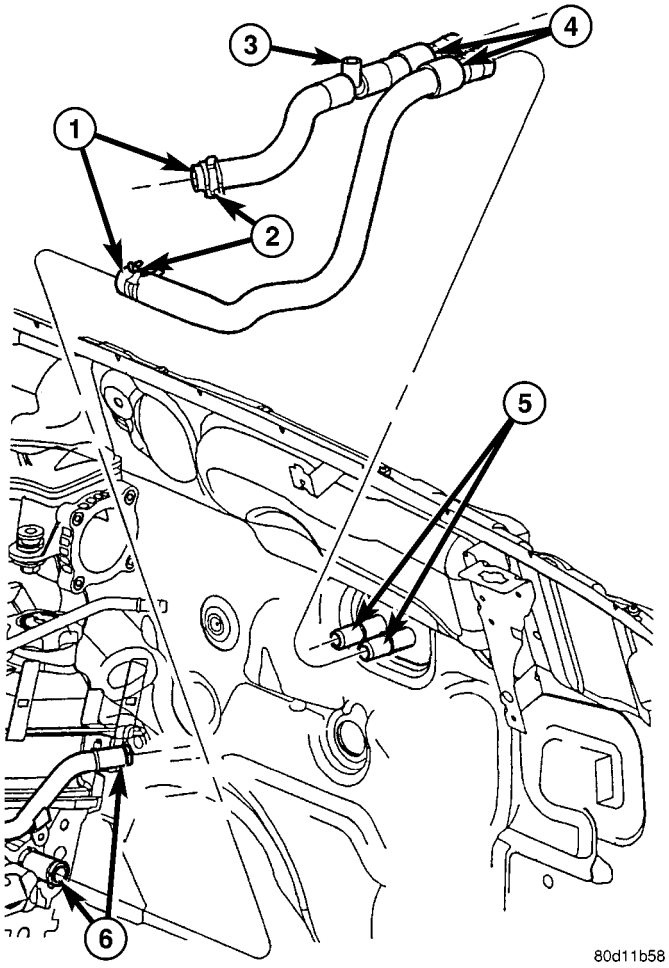

Fig. 58 HEATER HOSE ASSEMBLY- RHD 1.6L

1 - Heater Hoses
2 - Heater Hose Clamps
3 - Bleeder Assembly
4 - Heater Hose Retainers
5 - Heater Core Connections
6 - Engine Heater Pipes

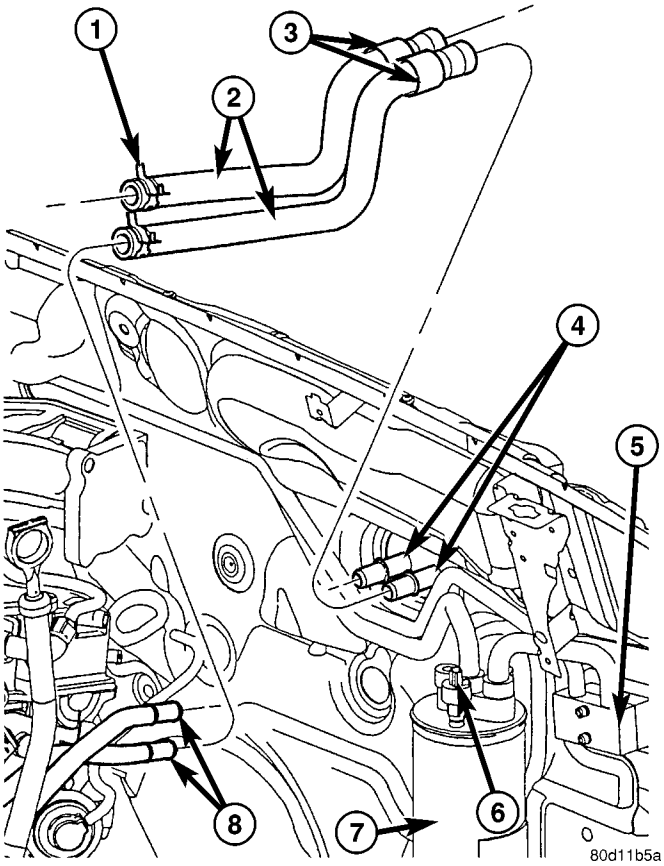

Fig. 59 HEATER HOSE ASSEMBLY-RHD 2.0L

1 - Heater Hose Clamps
2 - Heater Hoses
3 - Heater Hose Retainers
4 - Heater Core Connections
5 - H-Block
6 - Low Pressure Switch
7 - Filter Drier
8 - Engine Heater Pipes

(3) Carefully rotate the hose back and forth while pulling away from the connector nipple.

INSTALLATION

CAUTION: When installing hoses to heater core inlet or outlet nipples DO NOT exert excessive pressure. The heater core may become damaged and leak engine coolant.

(1) Carefully rotate the hose back and forth while pushing the hose onto the connector nipple.

(2) Using spring tension pliers, install the clamps at the end of the heater hose being installed.

(3) Refill the cooling system (Refer to 7 - COOLING - STANDARD PROCEDURE).

LIQUID LINE

DESCRIPTION

The liquid line is the line that goes from the condenser to the receiver-drier. It has no serviceable parts except the rubber O-rings. If the line is found to be leaking or is damaged it must be replaced as an assembly.

REMOVAL

The liquid line includes the Variable Orifice Valve (VOV), which is located within this line. The VOV cannot be adjusted or repaired and, if faulty or damaged, the liquid line unit must be replaced.

WARNING: REVIEW THE WARNINGS AND CAUTIONS IN THE FRONT OF THIS GROUP BEFORE PERFORMING THE FOLLOWING OPERATION.

(1) Recover the refrigerant from the refrigerant system(Refer to 24 - HEATING & AIR CONDITIONING - STANDARD PROCEDURE).

(2) Remove the nut that secures the liquid line fitting to the outlet fitting (lower fitting) of the condenser (Fig. 60).

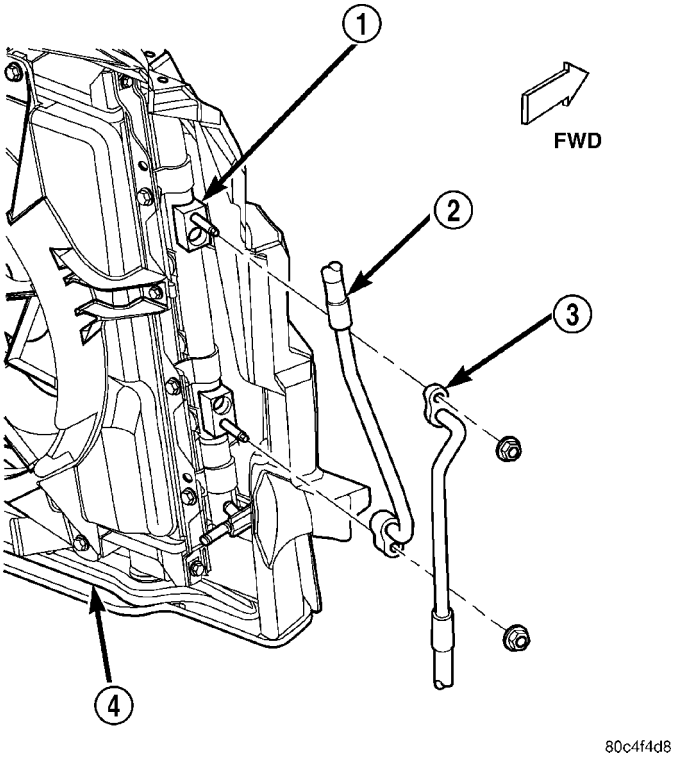

Fig. 60 A/C Refrigerant Lines - Condenser

1 - CONDENSER
2 - LIQUID LINE
3 - DISCHARGE LINE
4 - COOLING MODULE

(3) Disconnect the liquid line fitting from the condenser outlet fitting.

(4) Remove the rubber O-ring seal from the refrigerant line fitting of the liquid line and discard.

(5) Install plugs in, or tape over the opened condenser outlet fitting and the refrigerant line fitting of the liquid line.

(6) Remove the nut that secures the liquid line fitting (outboard fitting) to the mid-line connector block of the suction and liquid line assembly (Fig. 61).

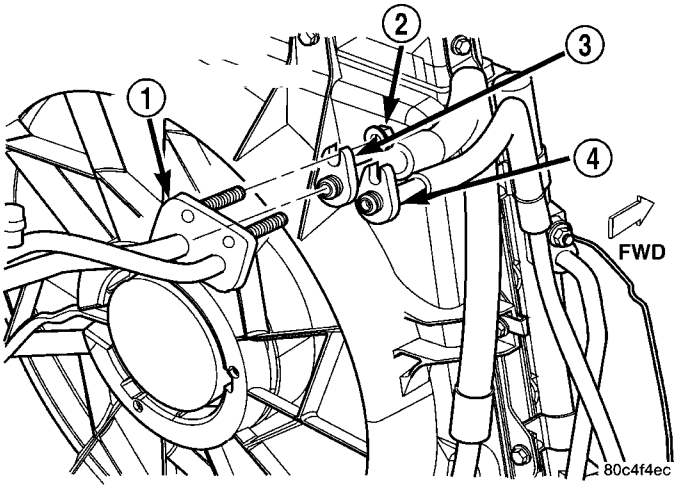

Fig. 61 A/C Refrigerant Lines - Mid-Line Connector

1 - SUCTION AND LIQUID LINE ASSEMBLY MID-LINE CONNECTOR BLOCK
2 - NUT
3 - SUCTION LINE
4 - LIQUID LINE

(7) Disconnect the liquid line fitting from the mid-line connector block of the suction and liquid line assembly.

(8) Remove the rubber O-ring seal from the refrigerant line fitting of the liquid line and discard.

(9) Install plugs in, or tape over the opened mid-line connector block liquid line port and the refrigerant line fitting of the liquid line.

(10) Remove the liquid line from the engine compartment.

INSTALLATION

WARNING: THE REFRIGERATION SYSTEM MUST BE COMPLETELY EMPTY BEFORE PROCEEDING WITH THIS OPERATION.

NOTE: Replacement of a/c line seals is required anytime connections are opened. Failure to replace seals could result in a refrigerant leak.

(1) Connect the liquid line at the drier.

(2) Connect the liquid line at the condenser.

LIQUID LINE (Continued)

(3) Evacuate the A/C system (Refer to 24 - HEATING & AIR CONDITIONING - STANDARD PROCEDURE).

(4) Recharge the refrigerant system (Refer to 24 - HEATING & AIR CONDITIONING - STANDARD PROCEDURE).

REFRIGERANT

DESCRIPTION

The refrigerant used in this air conditioning system is a HydroFluoroCarbon (HFC), type R-134a. Unlike R-12, which is a ChloroFluoroCarbon (CFC), R-134a refrigerant does not contain ozone-depleting chlorine. R-134a refrigerant is a non-toxic, non-flammable, clear, and colorless liquefied gas.

Even though R-134a does not contain chlorine, it must be reclaimed and recycled just like CFC-type refrigerants. This is because R-134a is a greenhouse gas and can contribute to global warming.

OPERATION

R-134a refrigerant is not compatible with R-12 refrigerant in an air conditioning system. Even a small amount of R-12 added to an R-134a refrigerant system will cause compressor failure, refrigerant oil sludge or poor air conditioning system performance. In addition, the PolyAlkylene Glycol (PAG) synthetic refrigerant oils used in an R-134a refrigerant system are not compatible with the mineral-based refrigerant oils used in an R-12 refrigerant system.

R-134a refrigerant system service ports, service tool couplers and refrigerant dispensing bottles have all been designed with unique fittings to ensure that an R-134a system is not accidentally contaminated with the wrong refrigerant (R-12). There are also labels posted in the engine compartment of the vehicle and on the compressor identifying to service technicians that the air conditioning system is equipped with R-134a.

STANDARD PROCEDURE - REFRIGERANT

This vehicle uses a refrigerant called R-134a. It is a non-toxic, non-flammable, clear colorless liquefied gas.

R-134a refrigerant is not compatible with R-12 refrigerant in an air conditioning system. Even a small amount of R-12 in a R-134a system could cause compressor failure, refrigerant oil to sludge and/or poor performance. **Never add any other type of refrigerant to a system designed to use R-134a refrigerant. System failure will occur.**

The high pressure service port is located on the filter/drier. The low pressure service port is located on the suction line near the strut tower.

When servicing a system, it is required that an air conditioning charging recovery/recycling machine be used (Fig. 62). Contact an automotive service equipment supplier for proper equipment. Refer to the operating instructions provided with the equipment for proper operation.

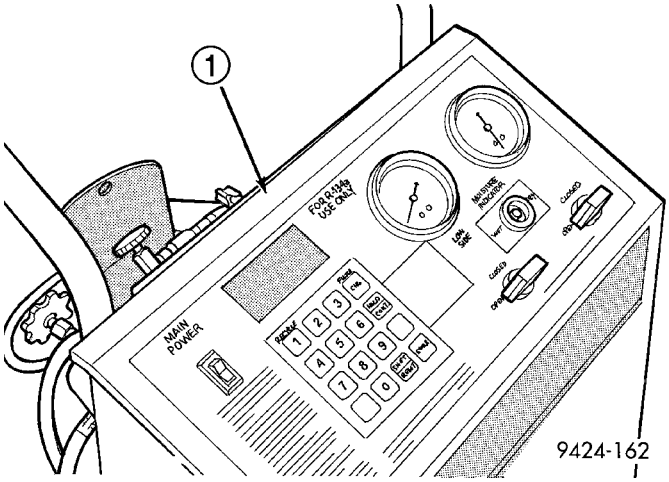

Fig. 62 REFRIGERANT RECOVERY/RECYCLING

1 - R-134 REFRIGERANT RECOVERY MACHINE

A manifold gauge set (Fig. 63) might be required with the charging and/or recovery/recycling device. Only use gauges that have not been used for R-12. The service hoses on the gauge set should have manual (turn wheel) or automatic back flow valves at the service port connector ends. This will prevent refrigerant R-134a from being released into the atmosphere.

R-134a refrigerant requires a special type of compressor oil. When adding oil, make sure to use the oil that is specified on the under hood label and/or the compressor housing.

The use of R-134a will have a positive environmental impact due to it's zero ozone depletion and low global warming impact.

REFRIGERANT (Continued)

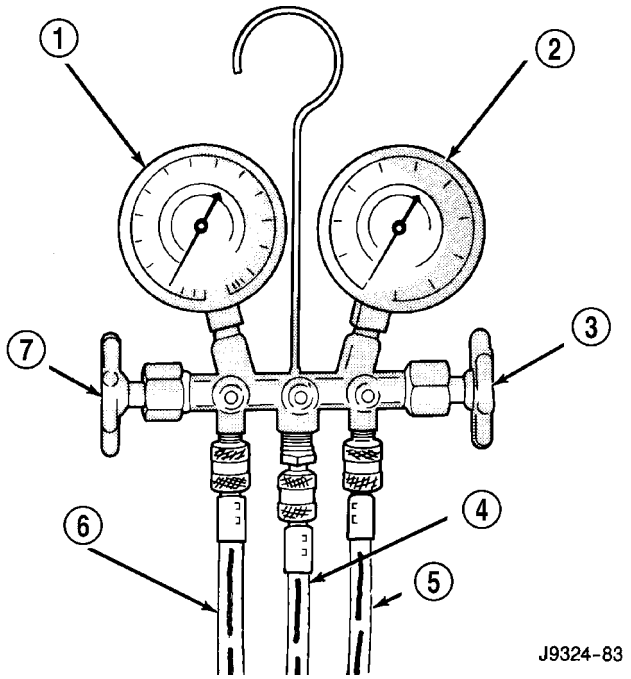

Fig. 63 MANIFOLD GAUGE SET - TYPICAL

1 - LOW PRESSURE GAUGE
2 - HIGH PRESSURE GAUGE
3 - VALVE
4 - VACUUM/REFRIGERANT HOSE (YELLOW W/BLACK STRIP)
5 - HIGH PRESSURE HOSE (RED W/BLACK STRIP)
6 - LOW PRESSURE HOSE (BLUE W/BLACK STRIP)
7 - VALVE

REFRIGERANT OIL

DESCRIPTION

The refrigerant oil used in R-134a refrigerant systems is a synthetic-based, PolyAlkylene Glycol (PAG), wax-free lubricant. Mineral-based R-12 refrigerant oils are not compatible with PAG oils, and should never be introduced to an R-134a refrigerant system.

There are different PAG oils available, and each contains a different additive package. The 10S15 and 10S17 compressors used in this vehicle is designed to use an ND-8 PAG refrigerant oil. Use only refrigerant oil of this same type to service the refrigerant system.

OPERATION

After performing any refrigerant recovery or recycling operation, always replenish the refrigerant system with the same amount of the recommended refrigerant oil as was removed. Too little refrigerant oil can cause compressor damage, and too much can reduce air conditioning system performance.

PAG refrigerant oil is much more hygroscopic than mineral oil, and will absorb any moisture it comes into contact with, even moisture in the air. The PAG oil container should always be kept tightly capped until it is ready to be used. After use, recap the oil container immediately to prevent moisture contamination.

STANDARD PROCEDURE

STANDARD PROCEDURE - SERVICING REFRIGERANT OIL LEVEL

CAUTION: The refrigerant oil used in a R-134a A/C system is unique. Use only oils which were designed to work with R-134a refrigerant. The oil designated for this vehicle is ND8 PAG (polyalkalene glycol).

Recovery/recycling equipment will measure the lubricant being removed. This is the amount of lubricant to be added back to the system. If a new compressor is being installed, drain lubricant from the old compressor, measure the amount drained and discard old lubricant. Drain the lubricant from the new compressor into a clean container. Return the amount of lubricant measured from the old compressor, plus the amount reclaimed from the system back into the new compressor.

(1) Discharge refrigerant system using recovery/recycling equipment if charge is present (Refer to 24 - HEATING & AIR CONDITIONING - STANDARD PROCEDURE).

(2) Disconnect refrigerant lines from A/C compressor. Cap the open lines to prevent moisture from entering system.

(3) Remove compressor from vehicle(Refer to 24 - HEATING & AIR CONDITIONING/PLUMBING/A/C COMPRESSOR - REMOVAL).

(4) From suction port on top of compressor, drain lubricant from compressor.

(5) Add system capacity minus the capacity of components that have not been replaced(Refer to 24 - HEATING & AIR CONDITIONING/PLUMBING/REFRIGERANT - STANDARD PROCEDURE) Add lubricant through the suction port on compressor. This is not to exceed 180 ml (6.10 oz.) in total.

(6) Install compressor and connect refrigerant lines. Then evacuate and charge refrigerant system-(Refer to 24 - HEATING & AIR CONDITIONING - STANDARD PROCEDURE)

STANDARD PROCEDURE - REFRIGERANT OIL LEVEL CHECK

It is important to have the correct amount of oil in the A/C system to ensure proper lubrication of the compressor. Too little oil will result in damage to the compressor. Too much oil will reduce the cooling

REFRIGERANT OIL (Continued)

capacity of the system and consequently result in higher discharge air temperatures.

NOTE: The oil used in the compressor is ND8 PAG R-134a refrigerant oil. Only refrigerant oil of the same type should be used to service the system. Do not use any other oil. The oil container should be kept tightly capped until it is ready for use. Tightly cap afterwards to prevent contamination from dirt and moisture. Refrigerant oil will quickly absorb any moisture it comes in contact with. Special effort must be used to keep all R-134a system components moisture-free. Moisture in the oil is very difficult to remove and will cause a reliability problem with the compressor.

It will not be necessary to check oil level in the compressor or to add oil unless there has been an oil loss. Oil loss at a leak point will be evident by the presence of a wet, shiny surface around the leak.

When an air conditioning system is first assembled, all components (except the compressor) are refrigerant oil free. After the system has been charged with R-134a refrigerant and operated, the oil in the compressor is dispersed through the lines and components. The evaporator, condenser, and filter-drier will retain a significant amount of oil, refer to the Refrigerant Oil Capacities chart. When a component is replaced, the specified amount of refrigerant oil must be added. When the compressor is replaced, the amount of oil that is retained in the rest of the system must be drained from the replacement compressor. When a line or component has ruptured and oil has escaped, the compressor should be removed and drained. The filter-drier must be replaced along with the ruptured part. The oil capacity of the system, minus the amount of oil still in the remaining components, can be measured and poured into the suction port of the compressor.

REFRIGERANT OIL CAPACITIES

Refrigerant Oil Capacities		
Component	ml	oz
Total System	180ml	6.1 oz
Filter-Drier	30 ml	1.0 oz
Condenser	30 ml	1.0 oz
Evaporator	59 ml	2.0 oz
All Refrigerant Lines	44 ml	1.5 oz

SUCTION LINE

DESCRIPTION

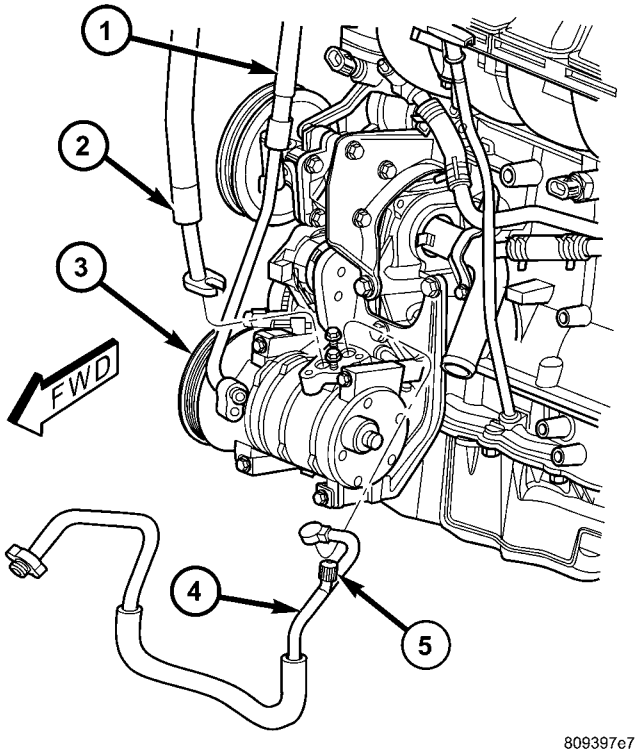

Fig. 64 A/C Refrigerant Lines - Compressor

1 - LIQUID LINE
2 - SUCTION LINE
3 - COMPRESSOR
4 - DISCHARGE LINE
5 - HIGH SIDE SERVICE PORT

The refrigerant lines and hoses (Fig. 64), (Fig. 65) and (Fig. 66) are used to carry the refrigerant between the various air conditioning system components. A barrier hose design with a nylon tube, which is sandwiched between rubber layers, is used for the R-134a air conditioning system on this vehicle. This nylon tube helps to further contain the R-134a refrigerant, which has a smaller molecular structure than R-12 refrigerant. The ends of the refrigerant hoses are made from lightweight aluminum or steel, and commonly use braze-less fittings.

Any kinks or sharp bends in the refrigerant plumbing will reduce the capacity of the entire air conditioning system. Kinks and sharp bends reduce the flow of refrigerant in the system. A good rule for the flexible hose refrigerant lines is to keep the radius of all bends at least ten times the diameter of the hose. In addition, the flexible hose refrigerant lines should be routed so they are at least 80 millimeters (3 inches) from the exhaust manifold.

SUCTION LINE (Continued)

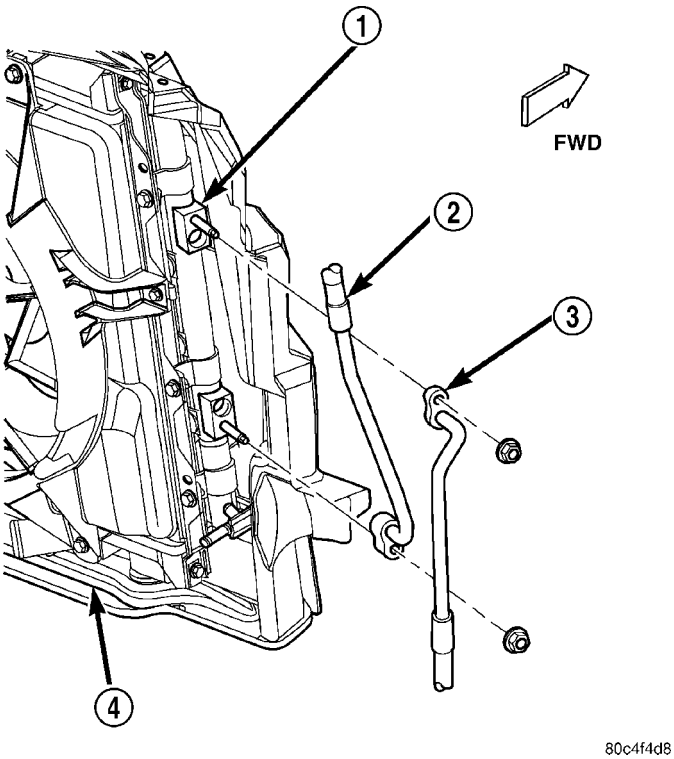

Fig. 65 A/C Refrigerant Lines - Condenser

1 - CONDENSER
2 - LIQUID LINE
3 - DISCHARGE LINE
4 - COOLING MODULE

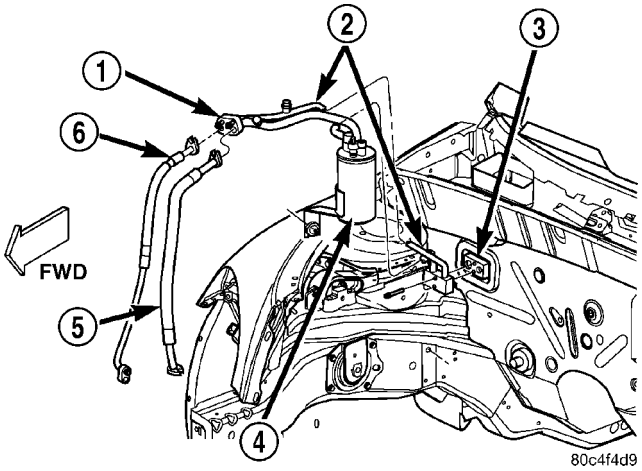

Fig. 66 A/C Refrigerant Lines - Accumulator/ Evaporator - LHD shown (typical - RHD)

1 - MID-LINE CONNECTOR BLOCK
2 - SUCTION & LIQUID LINE ASSEMBLY
3 - EVAPORATOR
4 - ACCUMULATOR
5 - SUCTION LINE
6 - LIQUID LINE

OPERATION

The refrigerant lines used for this vehicle are common between the two optional engines in order to reduce complexity. The following refrigerant lines are available for service replacement on this vehicle:

- **Discharge line** - The discharge line is a flexible hose type line that is connected from the discharge port of the compressor to the inlet (upper fitting) of the condenser. It has no serviceable parts except the rubber O-ring seals used on the fittings at each end of the line. If the discharge line is damaged or faulty, it must be replaced. (Fig. 67)or (Fig. 68)

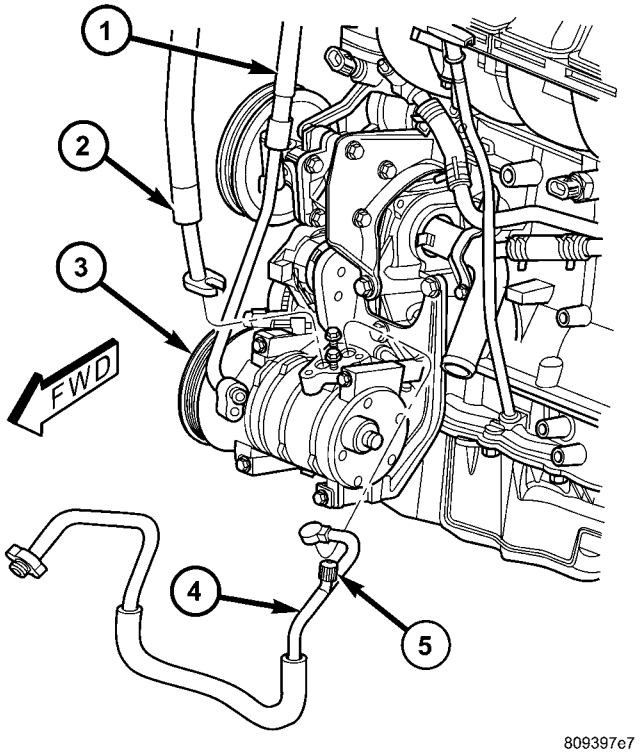

Fig. 67 A/C Refrigerant Lines - Compressor

1 - LIQUID LINE
2 - SUCTION LINE
3 - COMPRESSOR
4 - DISCHARGE LINE
5 - HIGH SIDE SERVICE PORT

- **Liquid line** - The liquid line is a flexible hose type line that is connected between the outlet (lower fitting) of the condenser and the mid-line connector block of the suction and liquid line assembly. The liquid line also contains the variable orifice valve. It has no serviceable parts except the rubber O-ring seals used on the fittings at each end of the line. If the liquid line or the variable orifice valve are damaged or faulty, the liquid line unit must be replaced.
- **Suction line** - The suction line is a flexible hose type line that is connected between the mid-line connector block of the suction and liquid line assembly and the suction port of the compressor. It has no serviceable parts except the rubber O-ring seals used on

SUCTION LINE (Continued)

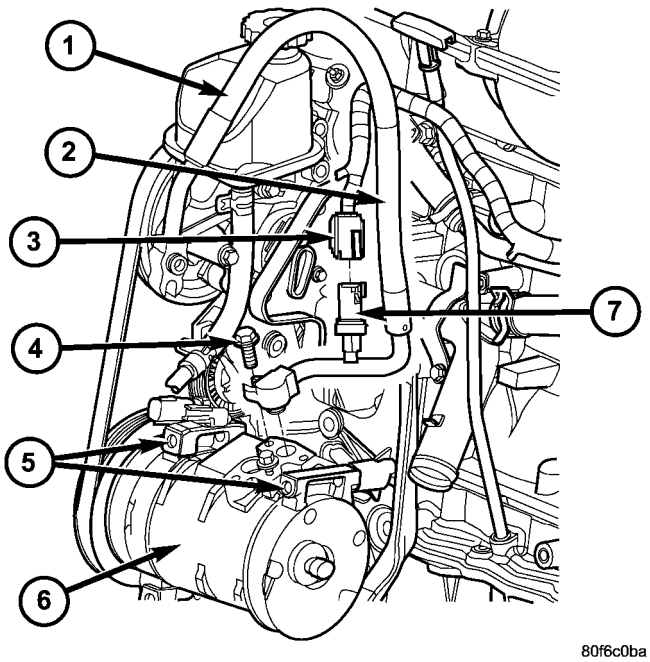

Fig. 68 A/C Compressor Removal/Installation 2.4L Turbo

1 - Power Steering Fluid Tank
2 - A/C Discharge Line
3 - High Pressure Cutoff Switch Electrical Connector
4 - Discharge Line Connection Bolt
5 - A/C Compressor Mounting Bolts (4 total)
6 - A/C Compressor
7 - High Pressure Cutoff Switch / High Side Charging Port

the fittings at each end of the line. If the suction line is damaged or faulty, it must be replaced.

- **Suction and liquid line assembly** - The suction and liquid line assembly is a formed tubing type line assembly that includes the mid-line connector block, a connector block for the evaporator, inlet and outlet line fittings for the accumulator and both A/C service ports (Fig. 69). The A/C service port caps, the A/C service port valve cores, the gasket used to seal the connector block at the evaporator and the rubber O-ring seals for the line fittings at the accumulator are all available for service replacement. If any other part of the suction and liquid line assembly is damaged or faulty, the assembly must be replaced.

High pressures are produced in the refrigerant system when the air conditioning compressor is operating. Extreme care must be exercised to make sure that each of the refrigerant line connections is pressure-tight and leak free. It is a good practice to inspect all flexible hose refrigerant lines at least once a year to make sure they are in good condition and properly routed.

REMOVAL

WARNING: REVIEW THE WARNINGS AND CAUTIONS IN THE FRONT OF THIS GROUP BEFORE PERFORMING THE FOLLOWING OPERATION.

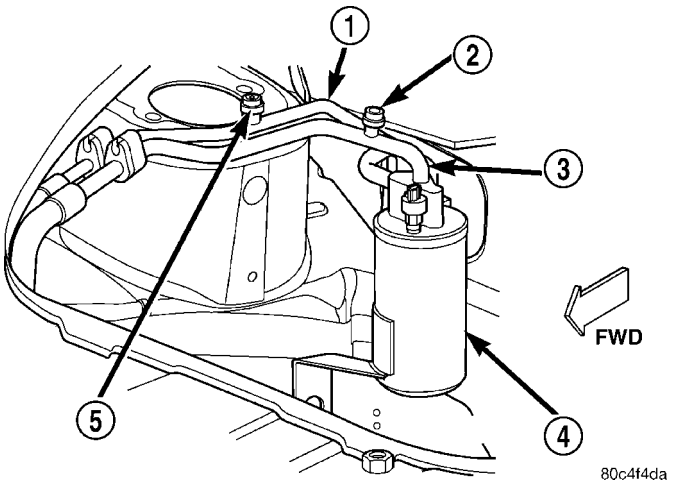

Fig. 69 A/C Service Ports

1 - LIQUID
2 - LOW SIDE SERVICE PORT
3 - SUCTION
4 - ACCUMULATOR
5 - HIGH SIDE SERVICE PORT (DO NOT USE FOR FIELD SERVICE)

(1) Recover the refrigerant from the refrigerant system. Refer to **Refrigerant Recovery** in this group for the proper procedures.

(2) Remove the nut that secures the suction line fitting (inboard fitting) to the mid-line connector block of the suction and liquid line assembly (Fig. 70).

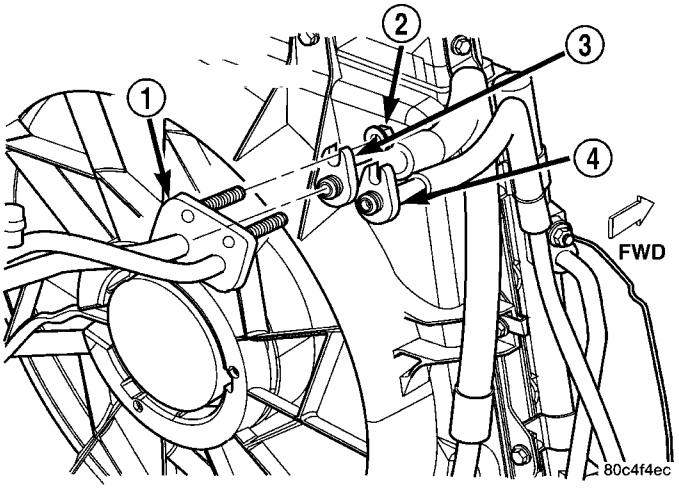

Fig. 70 A/C Refrigerant Lines - Mid-Line Connector

1 - SUCTION AND LIQUID LINE ASSEMBLY MID-LINE CONNECTOR BLOCK
2 - NUT
3 - SUCTION LINE
4 - LIQUID LINE

(3) Disconnect the suction line fitting from the mid-line connector block of the suction and liquid line assembly.

(4) Remove the rubber O-ring seal from the refrigerant line fitting of the suction line and discard.

SUCTION LINE (Continued)

(5) Install plugs in, or tape over the opened mid-line connector block suction line port and the refrigerant line fitting of the suction line.

(6) Raise and support the vehicle.

(7) Remove the screw that secures the suction line fitting to the compressor discharge port (Fig. 71)or (Fig. 72).

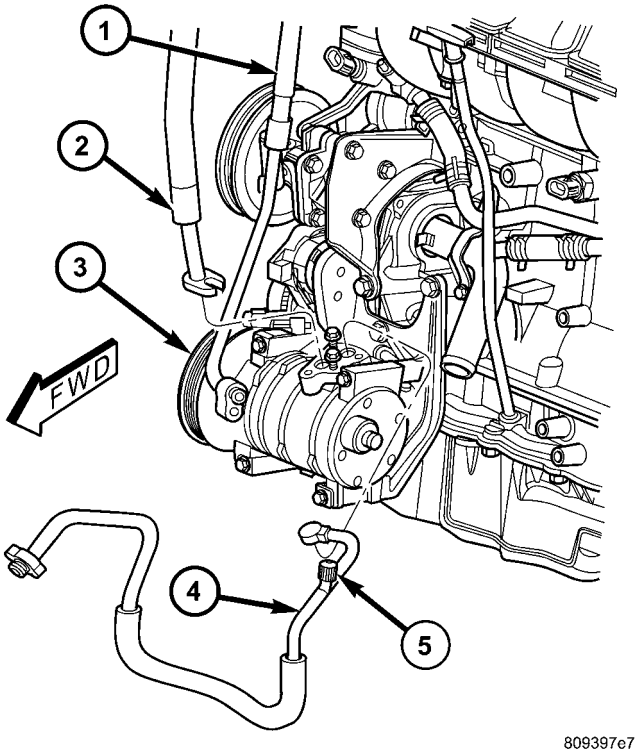

Fig. 71 A/C Refrigerant Lines - Compressor

1 - LIQUID LINE
2 - SUCTION LINE
3 - COMPRESSOR
4 - DISCHARGE LINE
5 - HIGH SIDE SERVICE PORT

(8) Disconnect the suction line fitting from the compressor suction port.

(9) Remove the rubber O-ring seal from the refrigerant line fitting of the suction line and discard.

(10) Install plugs in, or tape over the opened compressor suction port and the refrigerant line fitting of the suction line.

(11) Remove the suction line from the engine compartment.

INSTALLATION

WARNING: REVIEW THE WARNINGS AND CAUTIONS IN THE FRONT OF THIS GROUP BEFORE PERFORMING THE FOLLOWING OPERATION.

(1) Position the suction line into the engine compartment.

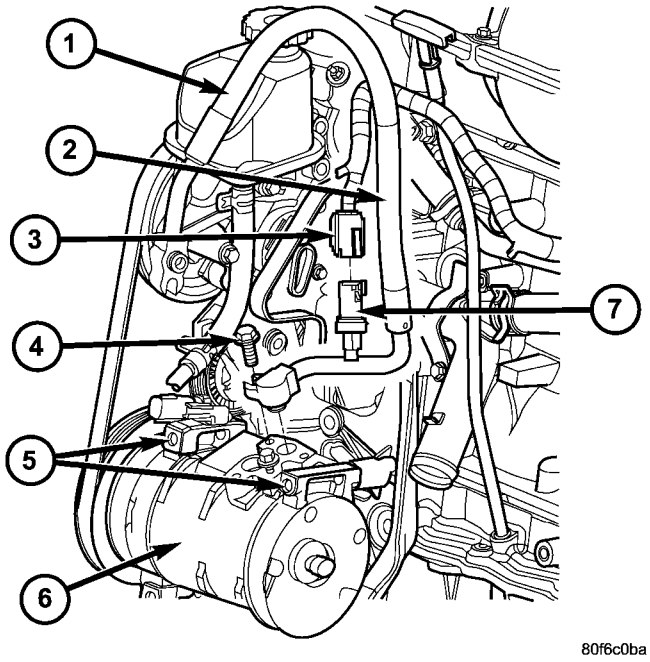

Fig. 72 A/C Compressor Removal/Installation 2.4L Turbo

1 - Power Steering Fluid Tank
2 - A/C Discharge Line
3 - High Pressure Cutoff Switch Electrical Connector
4 - Discharge Line Connection Bolt
5 - A/C Compressor Mounting Bolts (4 total)
6 - A/C Compressor
7 - High Pressure Cutoff Switch / High Side Charging Port

(2) Remove the tape or plugs from the compressor suction port and the refrigerant line fitting of the suction line.

(3) Lubricate a new rubber O-ring seal with clean refrigerant oil and install it on the refrigerant line fitting of the suction line. Use only the specified O-rings as they are made of a special material for the R-134a system. Use only refrigerant oil of the type recommended for the compressor in the vehicle.

(4) Reconnect the suction line fitting to the compressor suction port.

(5) Install and tighten the screw that secures the suction line fitting to the compressor suction port. Tighten the screw to 12.2 N·m (108 in. lbs.).

(6) Lower the vehicle.

(7) Remove the tape or plugs from the mid-line connector block suction line port and the refrigerant line fitting of the suction line.

(8) Lubricate a new rubber O-ring seal with clean refrigerant oil and install it on the refrigerant line fitting of the suction line. Use only the specified O-rings as they are made of a special material for the R-134a system. Use only refrigerant oil of the type recommended for the compressor in the vehicle.

SUCTION LINE (Continued)

(9) Reconnect the suction line fitting to the mid-line connector block suction line port of the suction and liquid line assembly.

(10) Install and tighten the nut that secures the suction line fitting to the mid-line connector block of the suction and liquid line assembly. Tighten the nut to 4.5 N·m (40 in. lbs.).

(11) Evacuate the refrigerant system(Refer to 24 - HEATING & AIR CONDITIONING - STANDARD PROCEDURE).

(12) Charge the refrigerant system(Refer to 24 - HEATING & AIR CONDITIONING - STANDARD PROCEDURE).

SUCTION AND LIQUID LINE ASSEMBLY

REMOVAL

WARNING: REVIEW THE WARNINGS AND CAUTIONS IN THE FRONT OF THIS GROUP BEFORE PERFORMING THE FOLLOWING OPERATION.

(1) Recover the refrigerant from the refrigerant system(Refer to 24 - HEATING & AIR CONDITIONING - STANDARD PROCEDURE).

(2) Disconnect and isolate the battery negative cable.

(3) If the vehicle is so equipped, relocate the vehicle speed control servo as necessary to access the accumulator. Refer to **Vehicle Speed Control System** for the proper procedures.

(4) Remove the nut that secures the liquid line fitting (outboard fitting) to the mid-line connector block of the suction and liquid line assembly (Fig. 73).

(5) Disconnect the liquid line fitting from the mid-line connector block of the suction and liquid line assembly.

(6) Remove the rubber O-ring seal from the refrigerant line fitting of the liquid line and discard.

(7) Install plugs in, or tape over the opened mid-line connector block liquid line port and the refrigerant line fitting of the liquid line.

(8) Remove the nut that secures the suction line fitting to the mid-line connector block of the suction and liquid line assembly.

(9) Disconnect the suction line fitting from the mid-line connector block of the suction and liquid line assembly.

(10) Remove the rubber O-ring seal from the refrigerant line fitting of the suction line and discard.

(11) Install plugs in, or tape over the opened mid-line connector block suction line port and the refrigerant line fitting of the suction line.

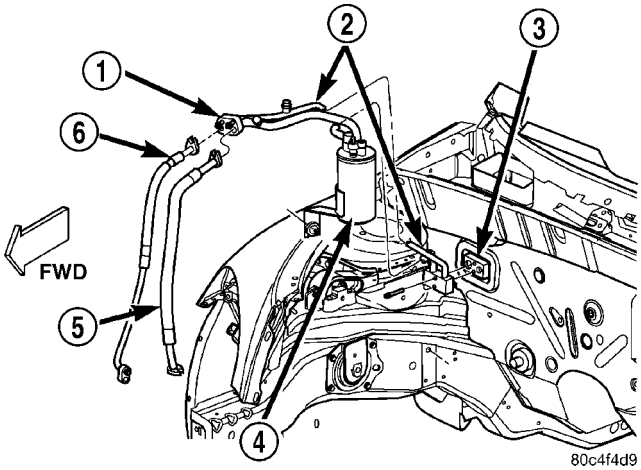

Fig. 73 Suction and Liquid Line Assembly Remove/ Install - LHD shown (typical RHD)

1 - MID-LINE CONNECTOR BLOCK
2 - SUCTION & LIQUID LINE ASSEMBLY
3 - EVAPORATOR
4 - ACCUMULATOR
5 - SUCTION LINE
6 - LIQUID LINE

(12) Remove the two screws that secure the two refrigerant line fittings of the suction and liquid line assembly to the accumulator connector block inlet and outlet ports.

(13) Disconnect the two refrigerant line fittings of the suction and liquid line assembly from the accumulator connector block inlet and outlet ports.

(14) Remove the rubber O-ring seal from the refrigerant line fittings of the suction and liquid line assembly and discard.

(15) Install plugs in, or tape over the opened accumulator connector block inlet and outlet ports and the refrigerant line fittings of the suction and liquid line assembly.

(16) Remove the two screws that secure the suction and liquid line assembly evaporator connector block to the evaporator.

(17) Disconnect the suction and liquid line assembly evaporator connector block from the evaporator.

(18) Remove the gasket from the suction and liquid line assembly evaporator connector block and discard.

(19) Install plugs in, or tape over the opened suction and liquid line assembly evaporator connector block ports and the evaporator inlet and outlet ports.

(20) Remove the suction and liquid line assembly from the engine compartment.

INSTALLATION

WARNING: REVIEW THE WARNINGS AND CAUTIONS IN THE FRONT OF THIS GROUP BEFORE PERFORMING THE FOLLOWING OPERATION.

SUCTION AND LIQUID LINE ASSEMBLY (Continued)

(1) Position the suction and liquid line assembly into the engine compartment.

(2) Remove the tape or plugs from the suction and liquid line assembly evaporator connector block ports and the evaporator inlet and outlet ports.

(3) Align the suction and liquid line assembly evaporator connector block and a new gasket to the evaporator inlet and outlet ports.

(4) Install and tighten the two screws that secure the suction and liquid line assembly evaporator connector block to the evaporator. Tighten the upper screw to 11.3 N·m (100 in. lbs.) first, then tighten the lower screw.

(5) Remove the tape or plugs from the accumulator connector block inlet and outlet ports and the refrigerant line fittings of the suction and liquid line assembly.

(6) Lubricate new rubber O-ring seals with clean refrigerant oil and install them on the refrigerant line fittings of the suction and liquid line assembly. Use only the specified O-rings as they are made of a special material for the R-134a system. Use only refrigerant oil of the type recommended for the compressor in the vehicle.

(7) Reconnect the refrigerant line fittings of the suction and liquid line assembly to the accumulator connector block inlet and outlet ports.

(8) Install and tighten the two screws that secure the two refrigerant line fittings of the suction and liquid line assembly to the accumulator connector block inlet and outlet ports. Tighten the screws to 2.3 N·m (20 in. lbs.).

(9) Remove the tape or plugs from the mid-line connector block suction line port and the refrigerant line fitting of the suction line.

(10) Lubricate a new rubber O-ring seal with clean refrigerant oil and install it on the refrigerant line fitting of the suction line. Use only the specified O-rings as they are made of a special material for the R-134a system. Use only refrigerant oil of the type recommended for the compressor in the vehicle.

(11) Reconnect the suction line fitting to the mid-line connector block suction line port of the suction and liquid line assembly.

(12) Install and tighten the nut that secures the suction line fitting to the mid-line connector block of the suction and liquid line assembly. Tighten the nut to 4.5 N·m (40 in. lbs.).

(13) Remove the tape or plugs from the mid-line connector block liquid line port and the refrigerant line fitting of the liquid line.

(14) Lubricate a new rubber O-ring seal with clean refrigerant oil and install it on the refrigerant line fitting of the liquid line. Use only the specified O-rings as they are made of a special material for the R-134a system. Use only refrigerant oil of the type recommended for the compressor in the vehicle.

(15) Reconnect the liquid line fitting to the mid-line connector block liquid line port of the suction and liquid line assembly.

(16) Install and tighten the nut that secures the liquid line fitting to the mid-line connector block of the suction and liquid line assembly. Tighten the nut to 4.5 N·m (40 in. lbs.).

(17) If the vehicle is so equipped, reinstall the vehicle speed control servo. Refer to **Vehicle Speed Control System** for the proper procedures.

(18) Reconnect the battery negative cable.

(19) Evacuate the refrigerant system. Refer to **Refrigerant System Evacuate** in this group for the proper procedures.

(20) Charge the refrigerant system. Refer to **Refrigerant System Charge** in this group for the proper procedures.

SERVICE PORT VALVE CORE

DESCRIPTION

A/C SERVICE PORT VALVE CORES

The A/C service port valve cores are serviceable items (Fig. 74). The high side valve is located on the filter-drier, and the low side valve is situated on the suction line, near the washer fluid reservoir filler.

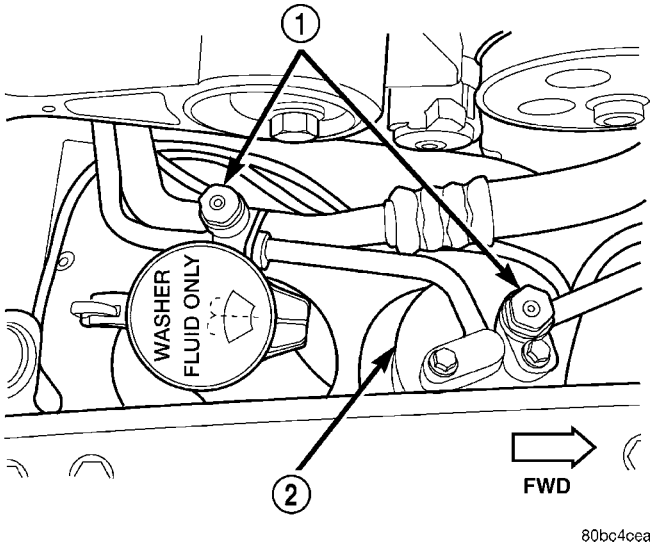

Fig. 74 A/C SERVICE PORT VALVES

1 - A/C SERVICE PORTS
2 - FILTER/DRIER

SERVICE PORT VALVE CORE (Continued)

REMOVAL– SERVICE PORT VALVE CORES

(1) Remove the valve caps.

(2) Using a R-134a refrigerant recovery machine, Remove the refrigerant from A/C system (Refer to 24 - HEATING & AIR CONDITIONING - STANDARD PROCEDURE).

(3) Using a standard valve core tool, remove the valve core. **Be careful to prevent any dirt/debris from entering the valve core opening or getting on the replacement valve core.**

INSTALLATION - SERVICE PORT VALVE CORES

(1) When assembling the new valve core into the port, the core should be oiled with clean ND8 PAG compressor oil.

CAUTION: A valve that is not fully seated can lead to damage to the valve during evacuation and charge. This can result in system refrigerant discharge while uncoupling the charge adapters.

(2) Install valve core into port and tighten.

(3) Evacuate the refrigerant system (Refer to 24 - HEATING & AIR CONDITIONING - STANDARD PROCEDURE).

(4) Recharge the refrigerant system (Refer to 24 - HEATING & AIR CONDITIONING - STANDARD PROCEDURE).

(5) Install the valve caps.

A/C VARIABLE ORIFICE TUBE

DESCRIPTION

A Variable Orifice Valve (VOV) is installed in the liquid line between the outlet of the condenser and the inlet of the evaporator. The inlet end of the Variable Orifice Valve has a nylon mesh filter screen, which filters the refrigerant and helps to reduce the potential for blockage of the metering orifices by refrigerant system contaminants. The outlet end of the tube has a nylon mesh diffuser screen. The O-rings on the plastic body of the VOV seal the tube to the inside of the liquid line and prevent refrigerant from bypassing the metering orifices.

The VOV is only serviced as an integral part of the liquid line. The VOV cannot be adjusted or repaired and, if faulty or plugged, the liquid line unit must be replaced.

REMOVAL - INSTALLATION

The Variable Orifice Valve (VOV) is located in the liquid line near the condenser. If the VOV is faulty or plugged, the liquid line unit must be replaced(Refer to 24 - HEATING & AIR CONDITIONING/PLUMBING/LIQUID LINE - REMOVAL) and (Refer to 24 - HEATING & AIR CONDITIONING/PLUMBING/LIQUID LINE - INSTALLATION).

CABIN HEATER

DESCRIPTION

The purpose of the cabin heater is to heat the engine coolant via resistance heating before it reaches the heater core. Current from the alternator is supplied to three glow plug type heating elements which reside in a single housing in the stream of coolant flow and as the coolant passes over the ends of the plugs the heat is transferred to the coolant on its way to the heater core.

OPERATION

At key on, three temperature sensors record the ambient air in order to determine if it is cold enough to turn on the cabin heaters. One sensor is in the vehicle on the battery under the driver's seat. The other two are in the engine compartment (inlet air temperature and manifold temperature). Based in the lowest temperature of the three sensors a pre-determined coolant temperature set point is established at which the cabin heaters will shut off.

For example, if the lowest recorded temperature from the three sensors is 0° C (32° F) or below, the heaters will shut off when the coolant temperature reaches 75° C (167°F). If the lowest ambient air temperature at key on is 10° C (50° F) or higher, then the heaters will not turn on.

There are three heating elements in the assembly: Plug 1 = 300W, Plug 2 = 400W and Plug 3 = 300W. Plug 1 is tied to one relay, while plugs 2 and 3 are tied to a second relay. Because there are 3 plugs with only 2 relays, when the cabin heater assembly is enabled by the engine controller, the firing sequence is as follows:

- a) Plug 1 only.
- b) Plugs 2 and 3 only.
- c) Plugs 1 to 3.

At each step, the engine controller monitors loads on the alternator to see if it is OK to proceed to the next phase of the firing sequence. The system will back out in the reverse order when a problem is encountered.

DIAGNOSIS AND TESTING - DIESEL ENGINE CABIN HEATER

The DRB-III© tester is programmed to allow the technician to turn each cabin heater relay on and off at a predetermined number of seconds. During this point, a voltage drop across each relay can be measured in order to determine whether they are functioning properly.

CABIN HEATER (Continued)

Checking the glow plug heating element entails measuring the resistance across each glow plug at room temperature (appx. 23° C, 74° F). The technician should unplug the 4–way cabin heater connector from the headlamp/dash wiring harness at the rear of the engine (rearward in vehicle above the exhaust manifold). Using an ohm-meter, measure the resistance across each glow plug by touching one probe to the aluminum cabin heater housing (ground) and the other probe to one of the terminals in the female cabin heater connector corresponding to each plug (pin 1= glow plug 1, pin 2=glow plug 2, etc.). Each heating element is functioning properly if the measured resistance is between 250–800 mOhm (.25–.8 Ohm) at room temperature (23° C, 74° F).

If one or more heating elements has a measured resistance outside this range and is not functioning properly then the entire heater assembly must be replaced.

NOTE: The process described above should be performed anytime a vehicle is serviced for a significant coolant loss. Glow plug life is affected whenever the cabin heater is operated with NO or LOW COOLANT FLOW across the glow plug tips.

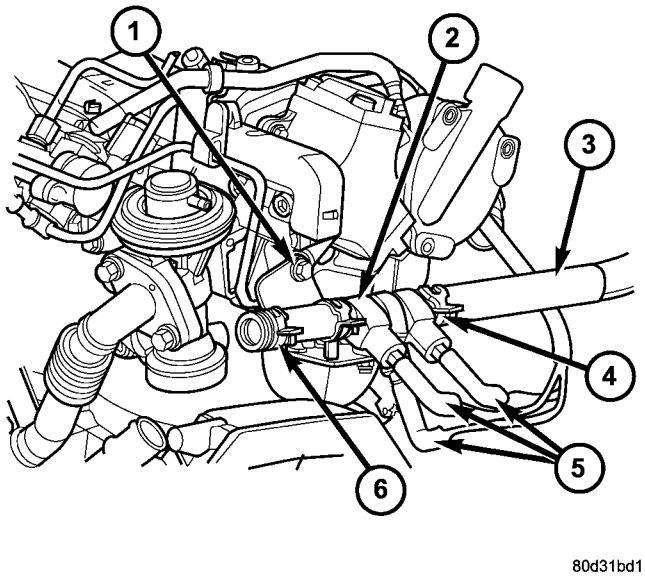

Fig. 75 Diesel Cabin Heater

1 - MOUNTING SCREW
2 - DIESEL CABIN HEATER ASSEMBLY
3 - HEATER HOSE
4 - HOSE CLAMP
5 - DIESEL CABIN HEATER GLOW PLUG CONNECTORS
6 - HOSE CLAMP

HEATER UNIT

REMOVAL

(1) Disconnect the battery negative cable.

(2) Drain the engine cooling system(Refer to 7 - COOLING/ENGINE - STANDARD PROCEDURE).

(3) Remove the 4–way connector from the cabin heater assembly.

(4) Remove the two hose clamps from each end of the cabin heater assembly (Fig. 75).

(5) Remove the hoses from each end of the cabin heater.

(6) Remove the cabin heater bracket retaining screw.

(7) Remove the cabin heater assembly from the vehicle.

INSTALLATION

(1) Install the cabin heater assembly to the vehicle's mounting bracket.

(2) Install the mounting bracket retaining screw and tighten.

(3) Install the heater hoses to each end of the cabin heater assembly and tighten the clamps.

(4) Install the 4–way connector to the cabin heater assembly.

(5) Refill the engine cooling system(Refer to 7 - COOLING/ENGINE - STANDARD PROCEDURE).

(6) Connect the battery negative cable.

(7) Run the Diagnosis and Testing procedure for the cabin heater(Refer to 24 - HEATING & AIR CONDITIONING/PLUMBING/ELECTRIC COOLANT PUMP - DIAGNOSIS AND TESTING).

EMISSIONS CONTROL

TABLE OF CONTENTS

page

EMISSIONS CONTROL
DESCRIPTION
DESCRIPTION - MONITORED COMPONENT . 1
DESCRIPTION - VEHICLE EMISSION CONTROL INFORMATION LABEL 5
DESCRIPTION - TRIP DEFINITION 5
OPERATION - NON-MONITORED CIRCUITS . . 5
DESCRIPTION - MONITORED SYSTEMS 6
DESCRIPTION - HIGH AND LOW LIMITS 9
OPERATION
OPERATION - SYSTEM 9
DRB III® STATE DISPLAY TEST MODE 10
EVAPORATIVE EMISSIONS 11
ON-BOARD DIAGNOSTICS 22

EMISSIONS CONTROL

DESCRIPTION

DESCRIPTION - MONITORED COMPONENT

There are several components that will affect vehicle emissions if they malfunction. If one of these components malfunctions the Malfunction Indicator Lamp (Check Engine) will illuminate.

Some of the component monitors are checking for proper operation of the part. Electrically operated components now have input (rationality) and output (functionality) checks as well as continuity tests (opens/shorts). Previously, a component like the Throttle Position sensor (TPS) was checked by the PCM for an open or shorted circuit. If one of these conditions occurred, a DTC was set. Now there is a check to ensure that the component is working. This is done by watching for a TPS indication of a greater or lesser throttle opening than MAP and engine rpm indicate. In the case of the TPS, if engine vacuum is high and engine rpm is 1600 or greater and the TPS indicates a large throttle opening, a DTC will be set. The same applies to low vacuum and 1600 rpm.

Any component that has an associated limp in will set a fault after 1 trip with the malfunction present.

Refer to the Diagnostic Trouble Codes Description Charts in this section and the appropriate Powertrain Diagnostic Procedure Manual for diagnostic procedures.

The following is a list of the monitored components:

- Catalyst Monitor
- Comprehensive Components
- EGR (if equipped)
- Fuel Control (rich/lean)
- Oxygen Sensor Monitor
- Oxygen Sensor Heater Monitor
- Purge
- Misfire
- Natural Vacuum Leak Detection (NVLD)

COMPREHENSIVE COMPONENTS

Along with the major monitors, OBD II requires that the diagnostic system monitor any component that could affect emissions levels. In many cases, these components were being tested under OBD I. The OBD I requirements focused mainly on testing emissions-related components for electrical opens and shorts.

However, OBD II also requires that inputs from powertrain components to the PCM be tested for **rationality**, and that outputs to powertrain components from the PCM be tested for **functionality**. Methods for monitoring the various Comprehensive Component monitoring include:

(1) Circuit Continuity
- Open
- Shorted high
- Shorted to ground

(2) Rationality or Proper Functioning
- Inputs tested for rationality
- Outputs tested for functionality

NOTE: Comprehensive component monitors are continuous. Therefore, enabling conditions do not apply. All will set a DTC and illuminate the MIL in 1-trip.

Input Rationality—While input signals to the PCM are constantly being monitored for electrical opens and shorts, they are also tested for rationality. This means that the input signal is compared against other inputs and information to see if it makes sense under the current conditions.

PCM sensor inputs that are checked for rationality include:

- Manifold Absolute Pressure (MAP) Sensor
- Oxygen Sensor (O2S) (slow response)
- Engine Coolant Temperature (ECT) Sensor

EMISSIONS CONTROL (Continued)

- Camshaft Position (CMP) Sensor
- Vehicle Speed Sensor
- Crankshaft Position (CKP) Sensor
- Intake Air Temperature (IAT) Sensor
- Throttle Position (TPS) Sensor
- Ambient/Battery Temperature Sensors
- Power Steering Switch
- Oxygen Sensor Heater
- Engine Controller
- Brake Switch
- Natural Vacuum Leak Detection (NVLD)
- P/N Switch
- Trans Controls

Output Functionality—PCM outputs are tested for functionality in addition to testing for opens and shorts. When the PCM provides a voltage to an output component, it can verify that the command was carried out by monitoring specific input signals for expected changes. For example, when the PCM commands the Idle Air Control (IAC) Motor to a specific position under certain operating conditions, it expects to see a specific (target) idle speed (RPM). If it does not, it stores a DTC.

PCM outputs monitored for functionality include:

- Fuel Injectors
- Ignition Coils
- Torque Converter Clutch Solenoid
- Idle Air Control
- Purge Solenoid
- EGR Solenoid
- Radiator Fan Control
- Trans Controls

OXYGEN SENSOR (O2S) MONITOR

DESCRIPTION—Effective control of exhaust emissions is achieved by an oxygen feedback system. The most important element of the feedback system is the O2S. The O2S is located in the exhaust path. Once it reaches operating temperature 300° to 350°C (572° to 662°F), the sensor generates a voltage that is inversely proportional to the amount of oxygen in the exhaust. When there is a large amount of oxygen in the exhaust caused by a lean condition, misfire or exhaust leak, the sensor produces a low voltage, below 450 mV. When the oxygen content is lower, caused by a rich condition, the sensor produces a higher voltage, above 450mV.

The information obtained by the sensor is used to calculate the fuel injector pulse width. The PCM is programmed to maintain the optimum air/fuel ratio. At this mixture ratio, the catalyst works best to remove hydrocarbons (HC), carbon monoxide (CO) and nitrous oxide (NOx) from the exhaust.

The O2S is also the main sensing element for the EGR, Catalyst and Fuel Monitors, and purge.

The O2S may fail in any or all of the following manners:

- Slow response rate (Big Slope)
- Reduced output voltage (Half Cycle)
- Heater Performance

Slow Response Rate (Big Slope)—Response rate is the time required for the sensor to switch from lean to rich signal output once it is exposed to a richer than optimum A/F mixture or vice versa. As the PCM adjusts the air/fuel ratio, the sensor must be able to rapidly detect the change. As the sensor ages, it could take longer to detect the changes in the oxygen content of the exhaust gas. The rate of change that an oxygen sensor experiences is called 'Big Slope'. The PCM checks the oxygen sensor voltage in increments of a few milliseconds.

Reduced Output Voltage (Half Cycle)—The output voltage of the O2S ranges from 0 to 1 volt. A good sensor can easily generate any output voltage in this range as it is exposed to different concentrations of oxygen. To detect a shift in the A/F mixture (lean or rich), the output voltage has to change beyond a threshold value. A malfunctioning sensor could have difficulty changing beyond the threshold value. Many times the condition is only temporey and the sensor will recover. Under normal conditions the voltage signal surpasses the threshold, and a counter is incremented by one. This is called the Half Cycle Counter.

Heater Performance—The heater is tested by a separate monitor. Refer to the Oxygen Sensor Heater Monitor.

OPERATION—As the Oxygen Sensor signal switches, the PCM monitors the half cycle and big slope signals from the oxygen sensor. If during the test neither counter reaches a predetermined value, a malfunction is entered and a Freeze Frame is stored. Only one counter reaching its predetermined value is needed for the monitor to pass.

The Oxygen Sensor Signal Monitor is a two trip monitor that is tested only once per trip. When the Oxygen Sensor fails the test in two consecutive trips, the MIL is illuminated and a DTC is set. The MIL is extinguished when the Oxygen Sensor monitor passes in three consecutive trips. The DTC is erased from memory after 40 consecutive warm-up cycles without test failure.

Enabling Conditions—The following conditions must typically be met for the PCM to run the oxygen sensor monitor:

- Battery voltage
- Engine temperature
- Engine run time
- Engine run time at a predetermined speed
- Engine run time at a predetermined speed and throttle opening
- Transmission in gear (automatic only)

EMISSIONS CONTROL (Continued)

- Fuel system in Closed Loop
- Long Term Adaptive (within parameters)
- Power Steering Switch in low PSI (no load)
- Engine at idle
- Fuel level above 15%
- Ambient air temperature
- Barometric pressure
- Engine RPM within acceptable range of desired idle
- Closed throttle speed

Pending Conditions—The Task Manager typically does not run the Oxygen Sensor Signal Monitor if overlapping monitors are running or the MIL is illuminated for any of the following:

- Misfire Monitor
- Front Oxygen Sensor and Heater Monitor
- MAP Sensor
- Vehicle Speed Sensor
- Engine Coolant Temperature Sensor
- Throttle Position Sensor
- Engine Controller Self Test Faults
- Cam or Crank Sensor
- Injector and Coil
- Idle Air Control Motor
- EVAP Electrical
- EGR Solenoid Electrical
- Intake Air Temperature
- 5 Volt Feed

Conflict—The Task Manager does not run the Oxygen Sensor Monitor if any of the following conditions are present:

- A/C ON (A/C clutch cycling temporarily suspends monitor)
- Purge flow in progress
- Ethenal content learn is taking place and the ethenal used once flag is set

Suspend—The Task Manager suspends maturing a fault for the Oxygen Sensor Monitor if an of the following are present:

- Oxygen Sensor Heater Monitor, Priority 1
- Misfire Monitor, Priority 2

OXYGEN SENSOR HEATER MONITOR (NGC)

DESCRIPTION—If the Oxygen sensor (O2S) DTC as well as a O2S heater DTC is present, the O2S Heater DTC MUST be repaired first. After the O2S Heater is repaired, verify that the sensor circuit is operating correctly.

The voltage reading taken from the O2S are very temperature sensitive. The readings taken from the O2S are not accurate below 300 degrees C. Heating the O2S is done to allow the engine controller to shift to closed loop control as soon as possible. The heating element used to heat the O2S must be tested to ensure that it is heating the sensor properly. Starting with the introduction on the NGC module the strategy for checking the heater circuit has changed. The heater resistance is checked by the NGC almost immediately after the engine is started. The same O2S heater return pin used to read the heater resistance is capable of detecting an open circuit, a shorted high or shorted low condition.

OXYGEN SENSOR HEATER MONITOR (SBEC)

DESCRIPTION—If there is an oxygen sensor (O2S) DTC as well as a O2S heater DTC, the O2S heater fault MUST be repaired first. After the O2S fault is repaired, verify that the heater circuit is operating correctly.

The voltage readings taken from the O2S are very temperature sensitive. The readings are not accurate below 300°C. Heating of the O2S is done to allow the engine controller to shift to closed loop control as soon as possible. The heating element used to heat the O2S must be tested to ensure that it is heating the sensor properly.

The heater element itself is not tested directly. The sensor output is used to test the heater by isolating the effect of the heater element on the O2S output voltage from the other effects. The resistance is normally between 100 ohms and 4.5 megaohms. When oxygen sensor temperature increases, the resistance in the internal circuit decreases. The PCM sends a 5 volts biased signal through the oxygen sensors to ground this monitoring circuit. As the temperature increases, resistance decreases and the PCM detects a lower voltage at the reference signal. Inversely, as the temperature decreases, the resistance increases and the PCM detects a higher voltage at the reference signal. The O2S circuit is monitored for a drop in voltage.

OPERATION—The Oxygen Sensor Heater Monitor begins after the ignition has been turned OFF and the O2 sensors have cooled. The PCM sends a 5 volt bias to the oxygen sensor every 1.6 seconds. The PCM keeps it biased for 35 ms each time. As the sensor cools down, the resistance increases and the PCM reads the increase in voltage. Once voltage has increased to a predetermined amount, higher than when the test started, the oxygen sensor is cool enough to test heater operation.

When the oxygen sensor is cool enough, the PCM energizes the ASD relay. Voltage to the O2 sensor begins to increase the temperature. As the sensor temperature increases, the internal resistance decreases. The PCM continues biasing the 5 volt signal to the sensor. Each time the signal is biased, the PCM reads a voltage decrease. When the PCM detects a voltage decrease of a predetermined value for several biased pulses, the test passes.

EMISSIONS CONTROL (Continued)

The heater elements are tested each time the engine is turned OFF if all the enabling conditions are met. If the monitor fails, the PCM stores a maturing fault and a Freeze Frame is entered. If two consecutive tests fail, a DTC is stored. Because the ignition is OFF, the MIL is illuminated at the beginning of the next key cycle, after the 2nd failure.

Enabling Conditions—The following conditions must be met for the PCM to run the oxygen sensor heater test:

- Engine run time of at least 5.1 minutes
- Key OFF power down
- Battery voltage of at least 10 volts
- Sufficient Oxygen Sensor cool down

Pending Conditions—There are not conditions or situations that prompt conflict or suspension of testing. The oxygen sensor heater test is not run pending resolution of MIL illumination due to oxygen sensor failure.

Suspend—There are no conditions which exist for suspending the Heater Monitor.

CATALYST MONITOR

To comply with clean air regulations, vehicles are equipped with catalytic converters. These converters reduce the emission of hydrocarbons, oxides of nitrogen and carbon monoxide.

Normal vehicle miles or engine misfire can cause a catalyst to decay. A meltdown of the ceramic core can cause a reduction of the exhaust passage. This can increase vehicle emissions and deteriorate engine performance, driveability and fuel economy.

The catalyst monitor uses dual oxygen sensors (O2S's) to monitor the efficiency of the converter. The dual O2S strategy is based on the fact that as a catalyst deteriorates, its oxygen storage capacity and its efficiency are both reduced. By monitoring the oxygen storage capacity of a catalyst, its efficiency can be indirectly calculated. The upstream O2S is used to detect the amount of oxygen in the exhaust gas before the gas enters the catalytic converter. The PCM calculates the A/F mixture from the output of the O2S. A low voltage indicates high oxygen content (lean mixture). A high voltage indicates a low content of oxygen (rich mixture).

When the upstream O2S detects a high oxygen condition, there is an abundance of oxygen in the exhaust gas. A functioning converter would store this oxygen so it can use it for the oxidation of HC and CO. As the converter absorbs the oxygen, there will be a lack of oxygen downstream of the converter. The output of the downstream O2S will indicate limited activity in this condition.

As the converter loses the ability to store oxygen, the condition can be detected from the behavior of the downstream O2S. When the efficiency drops, no chemical reaction takes place. This means the concentration of oxygen will be the same downstream as upstream. The output voltage of the downstream O2S copies the voltage of the upstream sensor. The only difference is a time lag (seen by the PCM) between the switching of the O2S's.

To monitor the system, the number of lean-to-rich switches of upstream and downstream O2S's is counted. The ratio of downstream switches to upstream switches is used to determine whether the catalyst is operating properly. An effective catalyst will have fewer downstream switches than it has upstream switches i.e., a ratio closer to zero. For a totally ineffective catalyst, this ratio will be one-to-one, indicating that no oxidation occurs in the device.

The system must be monitored so that when catalyst efficiency deteriorates and exhaust emissions increase to over the legal limit, the MIL (check engine lamp) will be illuminated.

Monitor Operation—To monitor catalyst efficiency, the PCM expands the rich and lean switch points of the heated oxygen sensor. With extended switch points, the air/fuel mixture runs richer and leaner to overburden the catalytic converter. Once the test is started, the air/fuel mixture runs rich and lean and the O2 switches are counted. A switch is counted when an oxygen sensor signal goes from below the lean threshold to above the rich threshold. The number of Rear O2 sensor switches is divided by the number of Front O2 sensor switches to determine the switching ratio.

The test runs for 20 seconds. As catalyst efficiency deteriorated over the life of the vehicle, the switch rate at the downstream sensor approaches that of the upstream sensor. If at any point during the test period the switch ratio reaches a predetermined value, a counter is incremented by one. The monitor is enabled to run another test during that trip. When the test fails three times, the counter increments to three, a malfunction is entered, and a Freeze Frame is stored. When the counter increments to three during the next trip, the code is matured and the MIL is illuminated. If the test passes the first, no further testing is conducted during that trip.

The MIL is extinguished after three consecutive good trips. The good trip criteria for the catalyst monitor is more stringent than the failure criteria. In order to pass the test and increment one good trip, the downstream sensor switch rate must be less than 80% of the upstream rate (60% for manual transmissions). The failure percentages are 90% and 70% respectively.

Enabling Conditions—The following conditions must typically be met before the PCM runs the catalyst monitor. Specific times for each parameter may be different from engine to engine.

EMISSIONS CONTROL (Continued)

- Accumulated drive time
- Enable time
- Ambient air temperature
- Barometric pressure
- Catalyst warm-up counter
- Engine coolant temperature
- Accumulated throttle position sensor
- Vehicle speed
- MAP
- RPM
- Engine in closed loop
- Fuel level

Pending Conditions—

- Misfire DTC
- Front Oxygen Sensor Response
- Front Oxygen Sensor Heater Monitor
- Front Oxygen Sensor Electrical
- Rear Oxygen Sensor Rationality (middle check)
- Rear Oxygen Sensor Heater Monitor
- Rear Oxygen Sensor Electrical
- Fuel System Monitor
- All TPS faults
- All MAP faults
- All ECT sensor faults
- Purge flow solenoid functionality
- Purge flow solenoid electrical
- All PCM self test faults
- All CMP and CKP sensor faults
- All injector and ignition electrical faults
- Idle Air Control (IAC) motor functionality
- Vehicle Speed Sensor
- Brake switch
- Intake air temperature

Conflict—The catalyst monitor does not run if any of the following are conditions are present:

- EGR Monitor in progress
- Fuel system rich intrusive test in progress
- EVAP Monitor in progress
- Time since start is less than 60 seconds
- Low fuel level
- Low ambient air temperature
- Ethanel content learn is taking place and the ethenal used once flag is set

Suspend—The Task Manager does not mature a catalyst fault if any of the following are present:

- Oxygen Sensor Monitor, Priority 1
- Upstream Oxygen Sensor Heater, Priority 1
- EGR Monitor, Priority 1
- EVAP Monitor, Priority 1
- Fuel System Monitor, Priority 2
- Misfire Monitor, Priority 2

DESCRIPTION - VEHICLE EMISSION CONTROL INFORMATION LABEL

All models have a Vehicle Emission Control Information (VECI) Label. Chrysler permanently attaches the label in the engine compartment. It cannot be removed without defacing information and destroying the label.

The label contains the vehicle's emission specifications and vacuum hose routings. All hoses must be connected and routed according to the label.

DESCRIPTION - TRIP DEFINITION

A "Trip" means vehicle operation (following an engine-off period) of duration and driving mode such that all components and systems are monitored at least once by the diagnostic system. The monitors must successfully pass before the PCM can verify that a previously malfunctioning component is meeting the normal operating conditions of that component. For misfire or fuel system malfunction, the MIL may be extinguished if the fault does not recur when monitored during three subsequent sequential driving cycles in which conditions are similar to those under which the malfunction was first determined.

Anytime the MIL is illuminated, a DTC is stored. The DTC can self erase only after the MIL has been extinguished. Once the MIL is extinguished, the PCM must pass the diagnostic test for the most recent DTC for 40 warm-up cycles (80 warm-up cycles for the Fuel System Monitor and the Misfire Monitor). A warm-up cycle can best be described by the following:

- The engine must be running
- A rise of 40°F in engine temperature must occur from the time when the engine was started
- Engine coolant temperature must crossover 160°F
- A "driving cycle" that consists of engine start up and engine shut off.

Once the above conditions occur, the PCM is considered to have passed a warm-up cycle. Due to the conditions required to extinguish the MIL and erase the DTC, it is most important that after a repair has been made, all DTC's be erased and the repair verified by running 1–good trip.

OPERATION - NON-MONITORED CIRCUITS

The PCM does not monitor all circuits, systems and conditions that could have malfunctions causing driveability problems. However, problems with these systems may cause the PCM to store diagnostic trouble codes for other systems or components. For example, a fuel pressure problem will not register a fault directly, but could cause a rich/lean condition or misfire. This could cause the PCM to store an oxygen sensor or misfire diagnostic trouble code.

The major non-monitored circuits are listed below along with examples of failures modes that do not directly cause the PCM to set a DTC, but for a system that is monitored.

EMISSIONS CONTROL (Continued)

FUEL PRESSURE

The fuel pressure regulator controls fuel system pressure. The PCM cannot detect a clogged fuel pump inlet filter, clogged in-line fuel filter, or a pinched fuel supply or return line. However, these could result in a rich or lean condition causing the PCM to store an oxygen sensor, fuel system, or misfire diagnostic trouble code.

SECONDARY IGNITION CIRCUIT

The PCM cannot detect an inoperative ignition coil, fouled or worn spark plugs, ignition cross firing, or open spark plug cables. The misfire will however, increase the oxygen content in the exhaust, deceiving the PCM in to thinking the fuel system is too lean. Also see misfire detection.

CYLINDER COMPRESSION

The PCM cannot detect uneven, low, or high engine cylinder compression. Low compression lowers O2 content in the exhaust. Leading to fuel system, oxygen sensor, or misfire detection fault.

EXHAUST SYSTEM

The PCM cannot detect a plugged, restricted or leaking exhaust system. It may set a EGR (if equipped) or Fuel system or O2S fault.

FUEL INJECTOR MECHANICAL MALFUNCTIONS

The PCM cannot determine if a fuel injector is clogged, the needle is sticking or if the wrong injector is installed. However, these could result in a rich or lean condition causing the PCM to store a diagnostic trouble code for either misfire, an oxygen sensor, or the fuel system.

EXCESSIVE OIL CONSUMPTION

Although the PCM monitors engine exhaust oxygen content when the system is in closed loop, it cannot determine excessive oil consumption.

THROTTLE BODY AIR FLOW

The PCM cannot detect a clogged or restricted air cleaner inlet or filter element.

VACUUM ASSIST

The PCM cannot detect leaks or restrictions in the vacuum circuits of vacuum assisted engine control system devices. However, these could cause the PCM to store a MAP sensor diagnostic trouble code and cause a high idle condition.

PCM SYSTEM GROUND

The PCM cannot determine a poor system ground. However, one or more diagnostic trouble codes may be generated as a result of this condition. The module should be mounted to the body at all times, including when diagnostics are performed.

PCM CONNECTOR ENGAGEMENT

The PCM may not be able to determine spread or damaged connector pins. However, it might store diagnostic trouble codes as a result of spread connector pins.

DESCRIPTION - MONITORED SYSTEMS

There are new electronic circuit monitors that check fuel, emission, engine and ignition performance. These monitors use information from various sensor circuits to indicate the overall operation of the fuel, engine, ignition and emission systems and thus the emissions performance of the vehicle.

The fuel, engine, ignition and emission systems monitors do not indicate a specific component problem. They do indicate that there is an implied problem within one of the systems and that a specific problem must be diagnosed.

If any of these monitors detect a problem affecting vehicle emissions, the Malfunction Indicator (Check Engine) Lamp will be illuminated. These monitors generate Diagnostic Trouble Codes that can be displayed with the a DRBIII® scan tool.

The following is a list of the system monitors:

- EGR Monitor (if equipped)
- Misfire Monitor
- Fuel System Monitor
- Oxygen Sensor Monitor
- Oxygen Sensor Heater Monitor
- Catalyst Monitor
- Evaporative System Leak Detection Monitor (if equipped)

Following is a description of each system monitor, and its DTC.

Refer to the appropriate Powertrain Diagnostics Procedures manual for diagnostic procedures.

OXYGEN SENSOR (O2S) MONITOR

Effective control of exhaust emissions is achieved by an oxygen feedback system. The most important element of the feedback system is the O2S. The O2S is located in the exhaust path. Once it reaches operating temperatures of 300° to 350°C (572° to 662°F), the sensor generates a voltage that is inversely proportional to the amount of oxygen in the exhaust. The information obtained by the sensor is used to calculate the fuel injector pulse width. The PCM is programmed to maintain the optimum air/fuel ratio. At this mixture ratio, the catalyst works best to remove hydrocarbons (HC), carbon monoxide (CO) and nitrous oxide (NOx) from the exhaust.

EMISSIONS CONTROL (Continued)

The O2S is also the main sensing element for the EGR (if equipped), Catalyst and Fuel Monitors.

The O2S may fail in any or all of the following manners:

- Slow response rate
- Reduced output voltage
- Dynamic shift
- Shorted or open circuits

Response rate is the time required for the sensor to switch from lean to rich once it is exposed to a richer than optimum A/F mixture or vice versa. As the sensor starts malfunctioning, it could take longer to detect the changes in the oxygen content of the exhaust gas.

The output voltage of the O2S ranges from 0 to 1 volt (voltages are offset by 2.5 volts on NGC vehicles). A good sensor can easily generate any output voltage in this range as it is exposed to different concentrations of oxygen. To detect a shift in the A/F mixture (lean or rich), the output voltage has to change beyond a threshold value. A malfunctioning sensor could have difficulty changing beyond the threshold value.

OXYGEN SENSOR HEATER MONITOR

If there is an oxygen sensor (O2S) DTC as well as a O2S heater DTC, the O2S heater fault MUST be repaired first. After the O2S fault is repaired, verify that the heater circuit is operating correctly.

Effective control of exhaust emissions is achieved by an oxygen feedback system. The most important element of the feedback system is the O2S. The O2S is located in the exhaust path. Once it reaches operating temperatures of 300° to 350°C (572 ° to 662°F), the sensor generates a voltage that is inversely proportional to the amount of oxygen in the exhaust. The information obtained by the sensor is used to calculate the fuel injector pulse width. This maintains a 14.7 to 1 Air Fuel (A/F) ratio. At this mixture ratio, the catalyst works best to remove hydrocarbons (HC), carbon monoxide (CO) and nitrogen oxide (NOx) from the exhaust.

The voltage readings taken from the O2S are very temperature sensitive. The readings are not accurate below 300°C. Heating of the O2S is done to allow the engine controller to shift to closed loop control as soon as possible. The heating element used to heat the O2S must be tested to ensure that it is heating the sensor properly.

The O2S circuit is monitored for a drop in voltage. The sensor output is used to test the heater by isolating the effect of the heater element on the O2S output voltage from the other effects.

EGR MONITOR (if equipped)

The Powertrain Control Module (PCM) performs an on-board diagnostic check of the EGR system.

The EGR monitor is used to test whether the EGR system is operating within specifications. The diagnostic check activates only during selected engine/driving conditions. When the conditions are met, the EGR is turned off (solenoid energized) and the O2S compensation control is monitored. Turning off the EGR shifts the air fuel (A/F) ratio in the lean direction. The O2S data should indicate an increase in the O2 concentration in the combustion chamber when the exhaust gases are no longer recirculated. While this test does not directly measure the operation of the EGR system, it can be inferred from the shift in the O2S data whether the EGR system is operating correctly. Because the O2S is being used, the O2S test must pass its test before the EGR test. Also looks at EGR linear potentiometer for feedback.

MISFIRE MONITOR

Excessive engine misfire results in increased catalyst temperature and causes an increase in HC emissions. Severe misfires could cause catalyst damage. To prevent catalytic convertor damage, the PCM monitors engine misfire.

The Powertrain Control Module (PCM) monitors for misfire during most engine operating conditions (positive torque) by looking at changes in the crankshaft speed. If a misfire occurs the speed of the crankshaft will vary more than normal.

FUEL SYSTEM MONITOR

To comply with clean air regulations, vehicles are equipped with catalytic converters. These converters reduce the emission of hydrocarbons, oxides of nitrogen and carbon monoxide. The catalyst works best when the air fuel (A/F) ratio is at or near the optimum of 14.7 to 1.

The PCM is programmed to maintain the optimum air/fuel ratio. This is done by making short term corrections in the fuel injector pulse width based on the O2S output. The programmed memory acts as a self calibration tool that the engine controller uses to compensate for variations in engine specifications, sensor tolerances and engine fatigue over the life span of the engine. By monitoring the actual air-fuel ratio with the O2S (short term) and multiplying that with the program long-term (adaptive) memory and comparing that to the limit, it can be determined whether it will pass an emissions test. If a malfunction occurs such that the PCM cannot maintain the optimum A/F ratio, then the MIL will be illuminated.

EMISSIONS CONTROL (Continued)

CATALYST MONITOR

To comply with clean air regulations, vehicles are equipped with catalytic converters. These converters reduce the emission of hydrocarbons, oxides of nitrogen and carbon monoxide.

Normal vehicle miles or engine misfire can cause a catalyst to decay. A meltdown of the ceramic core can cause a reduction of the exhaust passage. This can increase vehicle emissions and deteriorate engine performance, driveability and fuel economy.

The catalyst monitor uses dual oxygen sensors (O2S's) to monitor the efficiency of the converter. The dual O2S's strategy is based on the fact that as a catalyst deteriorates, its oxygen storage capacity and its efficiency are both reduced. By monitoring the oxygen storage capacity of a catalyst, its efficiency can be indirectly calculated. The upstream O2S is used to detect the amount of oxygen in the exhaust gas before the gas enters the catalytic converter. The PCM calculates the A/F mixture from the output of the O2S. A low voltage indicates high oxygen content (lean mixture). A high voltage indicates a low content of oxygen (rich mixture).

When the upstream O2S detects a lean condition, there is an abundance of oxygen in the exhaust gas. A functioning converter would store this oxygen so it can use it for the oxidation of HC and CO. As the converter absorbs the oxygen, there will be a lack of oxygen downstream of the converter. The output of the downstream O2S will indicate limited activity in this condition.

As the converter loses the ability to store oxygen, the condition can be detected from the behavior of the downstream O2S. When the efficiency drops, no chemical reaction takes place. This means the concentration of oxygen will be the same downstream as upstream. The output voltage of the downstream O2S copies the voltage of the upstream sensor. The only difference is a time lag (seen by the PCM) between the switching of the O2S's.

To monitor the system, the number of lean-to-rich switches of upstream and downstream O2S's is counted. The ratio of downstream switches to upstream switches is used to determine whether the catalyst is operating properly. An effective catalyst will have fewer downstream switches than it has upstream switches i.e., a ratio closer to zero. For a totally ineffective catalyst, this ratio will be one-to-one, indicating that no oxidation occurs in the device.

The system must be monitored so that when catalyst efficiency deteriorates and exhaust emissions increase to over the legal limit, the MIL (Check Engine lamp) will be illuminated.

NATURAL VACUUM LEAK DETECTION (NVLD) (if equipped)

The Natural Vacuum Leak Detection (NVLD) system is the next generation evaporative leak detection system that will first be used on vehicles equipped with the Next Generation Controller (NGC). This new system replaces the leak detection pump as the method of evaporative system leak detection. This is to detect a leak equivalent to a 0.020″ (0.5 mm) hole. This system has the capability to detect holes of this size very dependably.

The basic leak detection theory employed with NVLD is the ″Gas Law″. This is to say that the pressure in a sealed vessel will change if the temperature of the gas in the vessel changes. The vessel will only see this effect if it is indeed sealed. Even small leaks will allow the pressure in the vessel to come to equilibrium with the ambient pressure. In addition to the detection of very small leaks, this system has the capability of detecting medium as well as large evaporative system leaks.

The NVLD seals the canister vent during engine off conditions. If the EVAP system has a leak of less than the failure threshold, the evaporative system will be pulled into a vacuum, either due to the cool down from operating temperature or diurnal ambient temperature cycling. The diurnal effect is considered one of the primary contributors to the leak determination by this diagnostic. When the vacuum in the system exceeds about 1″ H2O (0.25 KPA), a vacuum switch closes. The switch closure sends a signal to the NGC. The NGC, via appropriate logic strategies (described below), utilizes the switch signal, or lack thereof, to make a determination of whether a leak is present.

The NVLD device is designed with a normally open vacuum switch, a normally closed solenoid, and a seal, which is actuated by both the solenoid and a diaphragm. The NVLD is located on the atmospheric vent side of the canister. The NVLD assembly may be mounted on top of the canister outlet, or in-line between the canister and atmospheric vent filter. The normally open vacuum switch will close with about 1″ H2O (0.25 KPA) vacuum in the evaporative system. The diaphragm actuates the switch. This is above the opening point of the fuel inlet check valve in the fill tube so cap off leaks can be detected. Submerged fill systems must have recirculation lines that do not have the in-line normally closed check valve that protects the system from failed nozzle liquid ingestion, in order to detect cap off conditions.

The normally closed valve in the NVLD is intended to maintain the seal on the evaporative system during the engine off condition. If vacuum in the evaporative system exceeds 3″ to 6″ H2O (0.75 to 1.5 KPA), the valve will be pulled off the seat, opening the seal. This will protect the system from excessive vacuum

EMISSIONS CONTROL (Continued)

as well as allowing sufficient purge flow in the event that the solenoid was to become inoperative.

The solenoid actuates the valve to unseal the canister vent while the engine is running. It also will be used to close the vent during the medium and large leak tests and during the purge flow check. This solenoid requires initial 1.5 amps of current to pull the valve open but after 100 ms. will be duty cycled down to an average of about 150 mA for the remainder of the drive cycle.

Another feature in the device is a diaphragm that will open the seal in the NVLD with pressure in the evaporative system. The device will ″blow off″ at about 0.5″ H2O (0.12 KPA) pressure to permit the venting of vapors during refueling. An added benefit to this is that it will also allow the tank to ″breathe″ during increasing temperatures, thus limiting the pressure in the tank to this low level. This is beneficial because the induced vacuum during a subsequent declining temperature will achieve the switch closed (pass threshold) sooner than if the tank had to decay from a built up pressure.

The device itself has 3 wires: Switch sense, solenoid driver and ground. It also includes a resistor to protect the switch from a short to battery or a short to ground. The NGC utilizes a high-side driver to energize and duty-cycle the solenoid.

DESCRIPTION - HIGH AND LOW LIMITS

The PCM compares input signal voltages from each input device with established high and low limits for the device. If the input voltage is not within limits and other criteria are met, the PCM stores a diagnostic trouble code in memory. Other diagnostic trouble code criteria might include engine RPM limits or input voltages from other sensors or switches that must be present before verifying a diagnostic trouble code condition.

OPERATION

OPERATION - SYSTEM

The Powertrain Control Module (PCM) monitors many different circuits in the fuel injection, ignition, emission and engine systems. If the PCM senses a problem with a monitored circuit often enough to indicate an actual problem, it stores a Diagnostic Trouble Code (DTC) in the PCM's memory. If the code applies to a non-emissions related component or system, and the problem is repaired or ceases to exist, the PCM cancels the code after 40 warmup cycles. Diagnostic trouble codes that affect vehicle emissions illuminate the Malfunction Indicator Lamp (MIL). Refer to Malfunction Indicator Lamp in this section.

Certain criteria must be met before the PCM stores a DTC in memory. The criteria may be a specific range of engine RPM, engine temperature, and/or input voltage to the PCM.

The PCM might not store a DTC for a monitored circuit even though a malfunction has occurred. This may happen because one of the DTC criteria for the circuit has not been met. **For example** , assume the diagnostic trouble code criteria requires the PCM to monitor the circuit only when the engine operates between 750 and 2000 RPM. Suppose the sensor's output circuit shorts to ground when engine operates above 2400 RPM (resulting in 0 volt input to the PCM). Because the condition happens at an engine speed above the maximum threshold (2000 rpm), the PCM will not store a DTC.

There are several operating conditions for which the PCM monitors and sets DTC's. Refer to Monitored Systems, Components, and Non-Monitored Circuits in this section.

NOTE: Various diagnostic procedures may actually cause a diagnostic monitor to set a DTC. For instance, pulling a spark plug wire to perform a spark test may set the misfire code. When a repair is completed and verified, use the DRBIII® scan tool to erase all DTC's and extinguish the MIL.

Technicians can display stored DTC's. Refer to Diagnostic Trouble Codes (Refer to 8 - ELECTRICAL/ ELECTRONIC CONTROL MODULES/POWERTRAIN CONTROL MODULE - DESCRIPTION). For obtaining the DTC information, use the Data Link Connector with the DRBIII® scan tool (Fig. 1).

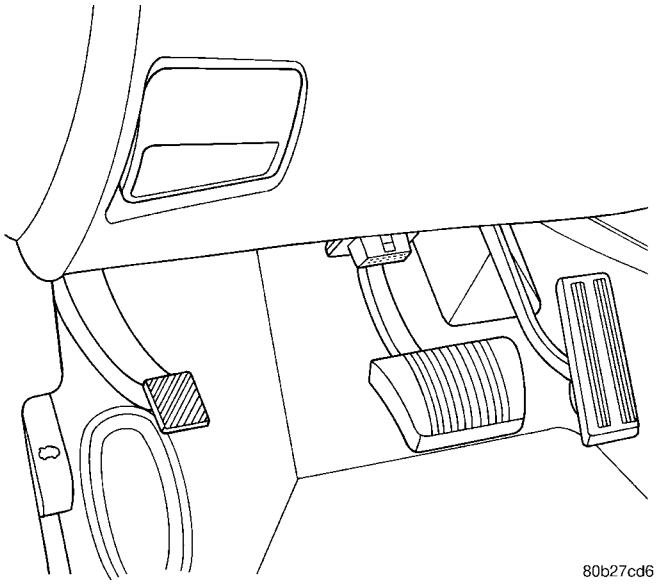

Fig. 1 Data Link Connector

EMISSIONS CONTROL (Continued)

DRB III® STATE DISPLAY TEST MODE

OPERATION

The switch inputs to the Powertrain Control Module (PCM) have two recognized states; HIGH and LOW. For this reason, the PCM cannot recognize the difference between a selected switch position versus an open circuit, a short circuit, or a defective switch. If the State Display screen shows the change from HIGH to LOW or LOW to HIGH, assume the entire switch circuit to the PCM functions properly. From the state display screen, access either State Display Inputs and Outputs or State Display Sensors.

EVAPORATIVE EMISSIONS

TABLE OF CONTENTS

page

EVAPORATIVE EMISSIONS
OPERATION - EVAPORATION CONTROL SYSTEM 11
EVAP/PURGE SOLENOID
DESCRIPTION 13
OPERATION 13
REMOVAL
REMOVAL 13
REMOVAL - 2.4L TURBO 13
INSTALLATION
INSTALLATION 14
INSTALLATION - 2.4L TURBO 14
FUEL FILLER CAP
DESCRIPTION 14
OPERATION 14
NATURAL VAC LEAK DETECTION ASSY
REMOVAL 14
INSTALLATION 15
ORVR
DESCRIPTION 15
OPERATION 15
DIAGNOSIS AND TESTING - VEHICLE DOES NOT FILL 17
PCV VALVE
DESCRIPTION 18
OPERATION 18
DIAGNOSIS AND TESTING - PCV SYSTEM . . . 18
REMOVAL - 1.6L 19
INSTALLATION - 1.6L 19
VAPOR CANISTER
DESCRIPTION 19
OPERATION 19
REMOVAL 20
INSTALLATION 21

EVAPORATIVE EMISSIONS

OPERATION - EVAPORATION CONTROL SYSTEM

The evaporation control system prevents the emission of fuel tank vapors into the atmosphere. When fuel evaporates in the fuel tank, the vapors pass through vent hoses or tubes to an activated carbon filled evaporative canister. The canister temporarily holds the vapors. The Powertrain Control Module (PCM) allows intake manifold vacuum to draw vapors into the combustion chambers during certain operating conditions (Fig. 1).

All engines use a proportional purge solenoid system. The PCM controls vapor flow by operating the purge solenoid. Refer to Proportional Purge Solenoid in this section.

NOTE: The evaporative system uses specially manufactured hoses. If they need replacement, only use fuel resistant hose. Also the hoses must be able to pass an Ozone compliance test.

NOTE: For more information on Onboard Refueling Vapor Recovery (ORVR), refer to the Fuel Delivery section.

EVAPORATIVE EMISSIONS (Continued)

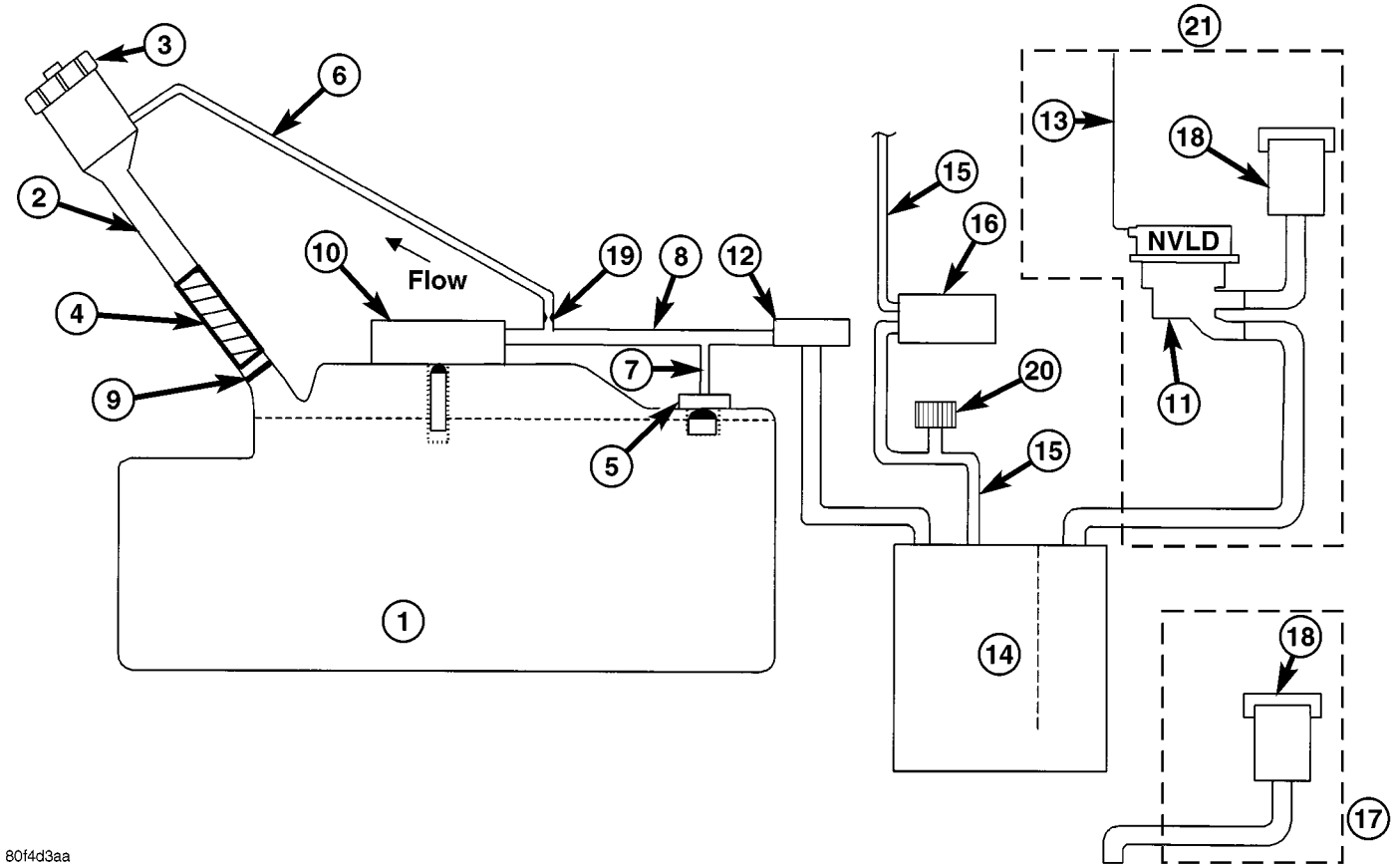

Fig. 1 ORVR System Schematic

1 - FUEL TANK (PLASTIC)
2 - FUEL FILLER TUBE
3 - FUEL CAP (PRESSURE/RELIEF)
4 - FILL TUBE TO FUEL TANK CONNECTOR (ELASTOMERIC)
5 - TANK VENT/ROLLOVER VALVE(S)
6 - VAPOR RECIRCULATION LINE
7 - TANK VAPOR LINE
8 - VAPOR LINE TO CANISTER
9 - CHECK VALVE (N/C)
10 - CONTROL VALVE
11 - NATURAL VACUUM LEAD DETECTION (NVLD)
12 - LIQUID SEPARATOR (IF EQUIPPED)
13 - ENGINE WIRING HARNESS TO NVLD
14 - VAPOR CANISTER
15 - PURGE LINE
16 - PURGE DEVICE
17 - WITHOUT NVLD
18 - BREATHER ELEMENT
19 - FLOW CONTROL ORIFICE
20 - SERVICE PORT
21 - WITH NVLD

EVAP/PURGE SOLENOID

DESCRIPTION

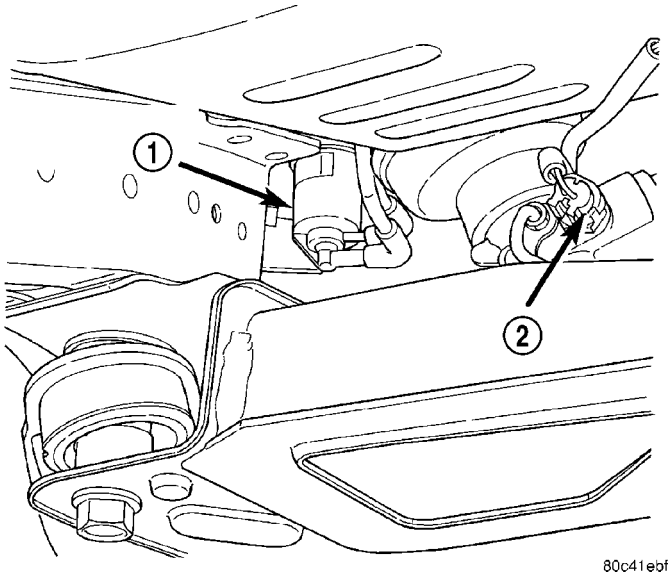

Fig. 2 Proportional Purge Solenoid

1 - EVAP PURGE SOLENOID
2 - POWER STEERING SWITCH

OPERATION

All vehicles use a proportional purge solenoid (Fig. 2). The solenoid regulates the rate of vapor flow from the EVAP canister to the throttle body. The PCM operates the solenoid.

During the cold start warm-up period and the hot start time delay, the PCM does not energize the solenoid. When de-energized, no vapors are purged.

The proportional purge solenoid operates at a frequency of 200 hz and is controlled by an engine controller circuit that senses the current being applied to the proportional purge solenoid and then adjusts that current to achieve the desired purge flow. The proportional purge solenoid controls the purge rate of fuel vapors from the vapor canister and fuel tank to the engine intake manifold.

REMOVAL

REMOVAL

(1) Remove the negative battery cable.

(2) Remove solenoid from bracket by pulling up on solenoid.

(3) Disconnect electrical connector from solenoid.

(4) Disconnect vacuum tubes from solenoid.

REMOVAL - 2.4L TURBO

(1) Disconnect the negative battery cable.

(2) Remove solenoid from mounting bracket by pressing tab and pulling of the solenoid from bracket (Fig. 3).

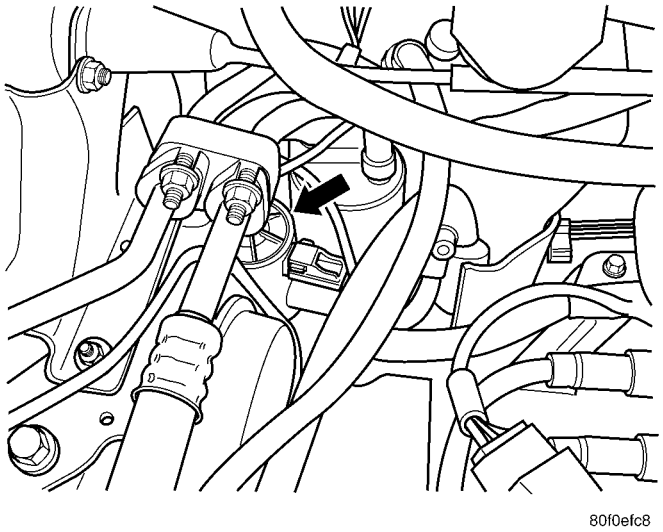

Fig. 3 EVAP PURGE SOLENOID LOCATION - 2.4L TURBO

(3) Unlock and disconnect the electrical connector from the purge solenoid (Fig. 4).

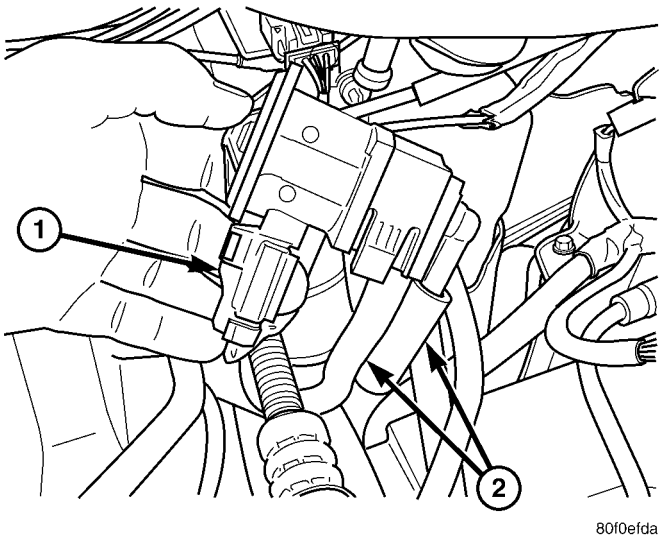

Fig. 4 EVAP PURGE SOLENOID - 2.4L TURBO

1 - Electrical Connector
2 - Vacuum Lines

(4) Remove the 2 vacuum lines (Fig. 4).

(5) Remove solenoid.

EVAP/PURGE SOLENOID (Continued)

INSTALLATION

INSTALLATION

The top of the solenoid has TOP printed on it. The solenoid will not operate unless it is installed correctly.

(1) Connect vacuum tube to solenoid.
(2) Connect electrical connector to solenoid.
(3) Install solenoid on bracket.
(4) Install the negative battery cable.

INSTALLATION - 2.4L TURBO

(1) Install the 2 vacuum lines (Fig. 4).
(2) Connect and lock the electrical connector to the purge solenoid (Fig. 4).
(3) Install solenoid to the mounting bracket (Fig. 3).
(4) Connect the negative battery cable.

FUEL FILLER CAP

DESCRIPTION

The plastic fuel fill cap is threaded/quarter turn onto the end of the fuel filler tube. It's purpose is to retain vapors and fuel in the fuel tank.

OPERATION

The fuel filler cap incorporates a two-way relief valve that is closed to atmosphere during normal operating conditions. The relief valve is calibrated to open when a pressure of 17 kPa (2.5 psi) or vacuum of 2 kPa (0.6 in. Hg) occurs in the fuel tank. When the pressure or vacuum is relieved, the valve returns to the normally closed position.

CAUTION: Remove the fuel filler cap to release fuel tank pressure before disconnecting any fuel system component.

NATURAL VAC LEAK DETECTION ASSY

REMOVAL

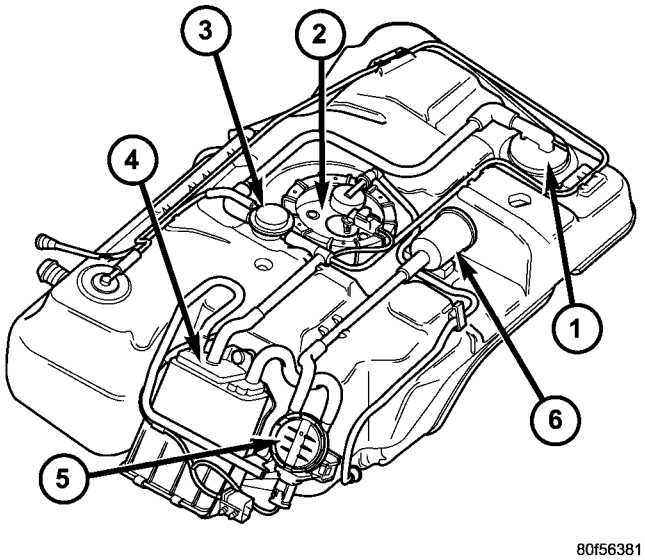

Fig. 5 Fuel Tank Assembly

1 - CONTROL VALVE
2 - FUEL PUMP
3 - FLOW MANAGEMENT VALVE
4 - EVAP CANISTOR
5 - NATURAL VACUUM LEAK DETECTION VALVE
6 - FILTER

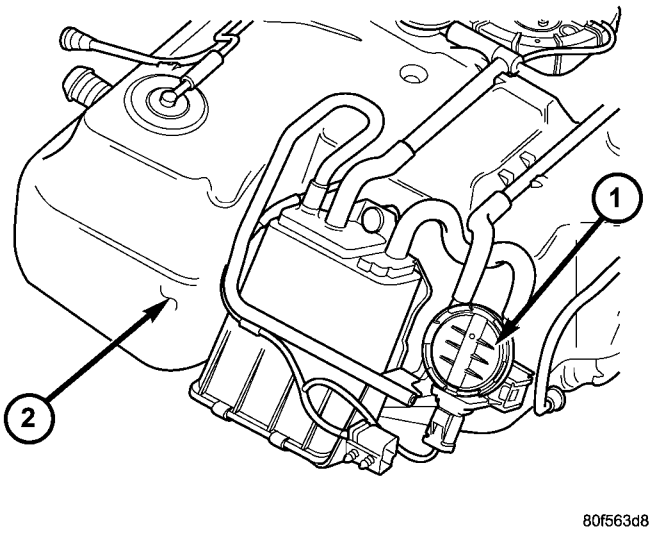

Fig. 6 EVAP System

1 - NVLD
2 - FUEL TANK

NATURAL VAC LEAK DETECTION ASSY (Continued)

(1) Release fuel pressure, Refer to Fuel System Pressure Release Procedure in the Fuel Delivery section.

(2) Remove the air cleaner lid, disconnect the inlet air temperature sensor and makeup air hose.

(3) Remove the negative battery cable.

(4) Raise vehicle and support.

(5) Drain fuel tank, refer to Draining Fuel Tank in the Fuel Delivery section.

(6) Remove fuel tank and EVAP system (Fig. 6), refer to the Fuel Tank removal/installation section in the Fuel Delivery section (Fig. 5).

(7) Remove hoses from NVLD assembly.

(8) Remove the bolts from the NVLD Assembly.

INSTALLATION

(1) Install NVLD assembly to the bracket.

(2) Install assembly to the fuel tank.

(3) Install hoses and lines.

(4) Install the fuel tank and EVAP system, refer to the Fuel Tank removal/installation section in the Fuel Delivery section.

(5) Lower vehicle.

(6) Install the negative battery cable.

(7) Install the air cleaner lid, connect the inlet air temperature sensor and makeup air hose.

(8) Fill fuel tank. Use the DRBIII® scan tool to pressurize the fuel system. Check for leaks.

ORVR

DESCRIPTION

Onboard Refueling Vapor Recovery (ORVR) System Schematic and components.

OPERATION

The emission control principle used in the ORVR system is that the fuel flowing into the filler tube (approx. 1” I.D.) creates an aspiration effect which draws air into the fill tube (Fig. 7). During refueling, the fuel tank is vented to the vapor canister to capture escaping vapors. With air flowing into the filler tube, there are no fuel vapors escaping to the atmosphere. Once the refueling vapors are captured by the canister, the vehicle’s computer controlled purge system draws vapor out of the canister for the engine to burn. The vapors flow is metered by the purge solenoid so that there is no or minimal impact on driveability or tailpipe emissions.

As fuel starts to flow through the fill tube, it opens the normally closed check valve and enters the fuel tank. Vapor or air is expelled from the tank through the control valve to the vapor canister. Vapor is absorbed in the canister until vapor flow in the lines stops, either following shut-off or by having the fuel level in the tank rise high enough to close the control valve. The control valve contains a float that rises to seal the large diameter vent path to the canister. At this point in the fueling of the vehicle, the tank pressure increase, the check valve closes (preventing tank fuel from spiting back at the operator), and fuel then rises up the filler tube to shut-off the dispensing nozzle.

If the engine is shut-off while the On-Board diagnostics test is running, low level tank pressure can be trapped in the fuel tank and fuel can not be added to the tank until the pressure is relieved. This is due to the leak detection pump closing the vapor outlet from the top of the tank and the one-way check valve not allowing the tank to vent through the fill tube to atmosphere. Therefore, when fuel is added, it will back-up in the fill tube and shut off the dispensing nozzle. The pressure can be eliminated in two ways: 1. Vehicle purge must be activated and for a long enough period to eliminate the pressure. 2. Removing the fuel cap and allowing enough time for the system to vent thru the recirulation tube.

ORVR (Continued)

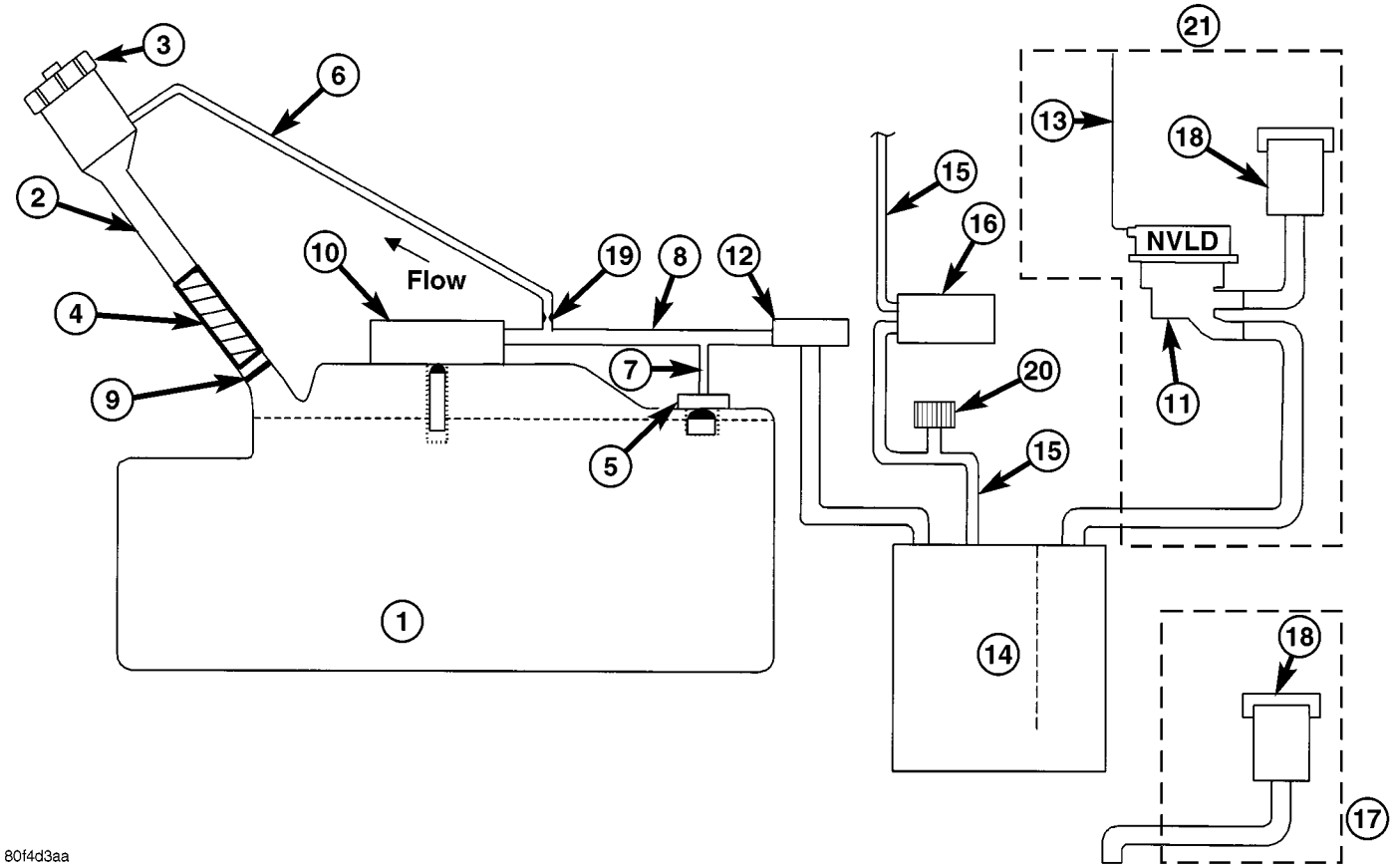

Fig. 7 ORVR System Schematic

1 - FUEL TANK (PLASTIC)
2 - FUEL FILLER TUBE
3 - FUEL CAP (PRESSURE/RELIEF)
4 - FILL TUBE TO FUEL TANK CONNECTOR (ELASTOMERIC)
5 - TANK VENT/ROLLOVER VALVE(S)
6 - VAPOR RECIRCULATION LINE
7 - TANK VAPOR LINE
8 - VAPOR LINE TO CANISTER
9 - CHECK VALVE (N/C)
10 - CONTROL VALVE
11 - NATURAL VACUUM LEAD DETECTION (NVLD)
12 - LIQUID SEPARATOR (IF EQUIPPED)
13 - ENGINE WIRING HARNESS TO NVLD
14 - VAPOR CANISTER
15 - PURGE LINE
16 - PURGE DEVICE
17 - WITHOUT NVLD
18 - BREATHER ELEMENT
19 - FLOW CONTROL ORIFICE
20 - SERVICE PORT
21 - WITH NVLD

ORVR (Continued)

DIAGNOSIS AND TESTING - VEHICLE DOES NOT FILL

CONDITION	POSSIBLE CAUSES	CORRECTION
Pre-Mature Nozzle Shut-Off	Defective fuel tank assembly components.	Fill tube improperly installed (sump) Fill tube hose pinched. Check valve stuck shut. Control valve stuck shut.
	Defective vapor/vent components.	Vent line from control valve to canister pinched. Vent line from canister to vent filter pinched. Canister vent valve failure (requires double failure, plugged to NVLD and atmosphere). Leak detection pump failed closed. Leak detection pump filter plugged.
	On-Board diagnostics evaporative system leak test just conducted.	Canister vent valve vent plugged to atmosphere. engine still running when attempting to fill (System designed not to fill).
	Defective fill nozzle.	Try another nozzle.
Fuel Spits Out Of Filler Tube.	During fill.	See Pre-Mature Shut-Off.
	At conclusion of fill.	Defective fuel handling component. (Check valve stuck open).
		Defective vapor/vent handling component.
		Defective fill nozzle.

PCV VALVE

DESCRIPTION

It threads into the valve cover (Fig. 8).

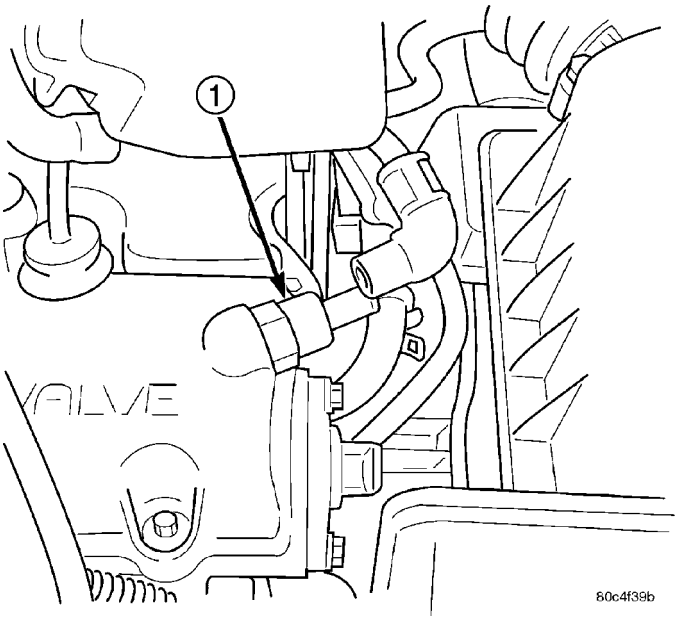

Fig. 8 PCV System—2.4L

1 - PCV VALVE

OPERATION

When the engine is not operating or during an engine backfire, the spring forces the plunger back against the seat. This prevents vapors from flowing through the valve (Fig. 9).

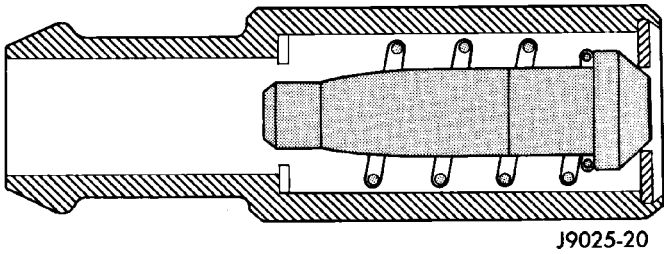

Fig. 9 Engine Off or Engine Backfire No Vapor Flow

When the engine is at idle or cruising, high manifold vacuum is present. At these times manifold vacuum is able to completely compress the spring and pull the plunger to the top of the valve (Fig. 10). In this position there is minimal vapor flow through the valve.

During periods of moderate intake manifold vacuum the plunger is only pulled part way back from the inlet. This results in maximum vapor flow through the valve (Fig. 11).

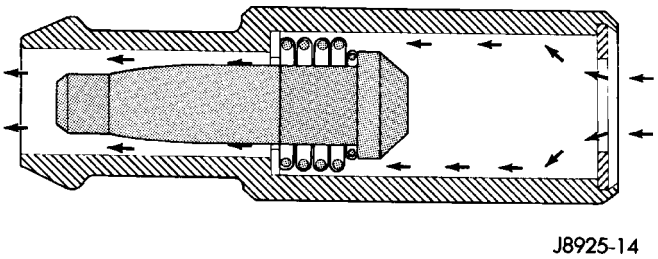

Fig. 10 High Intake Manifold Vacuum Minimal Vapor Flow

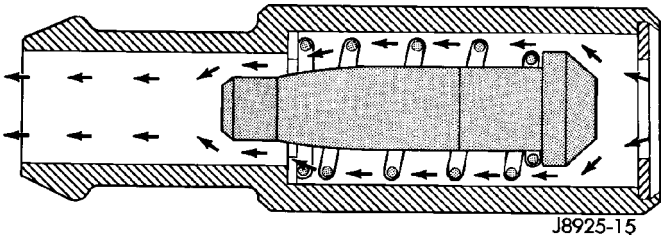

Fig. 11 Moderate Intake Manifold Vacuum Maximum Vapor Flow

DIAGNOSIS AND TESTING - PCV SYSTEM

WARNING: APPLY PARKING BRAKE AND/OR BLOCK WHEELS BEFORE PERFORMING ANY TEST OR ADJUSTMENT WITH THE ENGINE OPERATING.

(1) With engine idling, remove the hose from the PCV valve. If the valve is not plugged, a hissing noise will be heard as air passes through the valve. A strong vacuum should also be felt when a finger is placed over the valve inlet.

(2) Install hose on PCV valve. Remove the make-up air hose from the air plenum at the rear of the engine. Hold a piece of stiff paper (parts tag) loosely over the end of the make-up air hose.

(3) After allowing approximately one minute for crankcase pressure to reduce, the paper should draw up against the hose with noticeable force. If the engine does not draw the paper against the grommet after installing a new valve, replace the PCV valve hose.

(4) Turn the engine off. Remove the PCV valve from intake manifold. The valve should rattle when shaken.

(5) Replace the PCV valve and retest the system if it does not operate as described in the preceding tests. **Do not attempt to clean the old PCV valve.** If the valve rattles, apply a light coating of Loctite® Pipe Sealant With Teflon to the threads. Thread the PCV valve into the manifold plenum and tighten to 7 N·m (60 in. lbs.) torque.

PCV VALVE (Continued)

REMOVAL - 1.6L

(1) Remove the bolt for the PCV valve (Fig. 12).

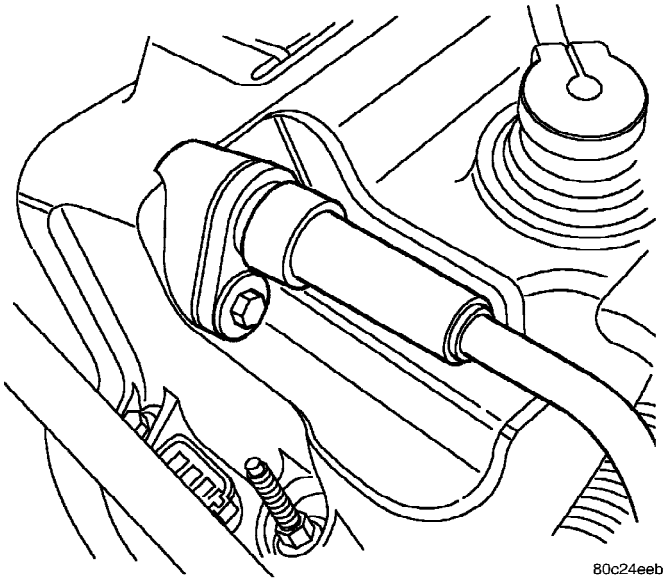

Fig. 12 PCV VALVE LOCATION - 1.6L

(2) Remove the hose.
(3) Remove the PCV (Fig. 13).

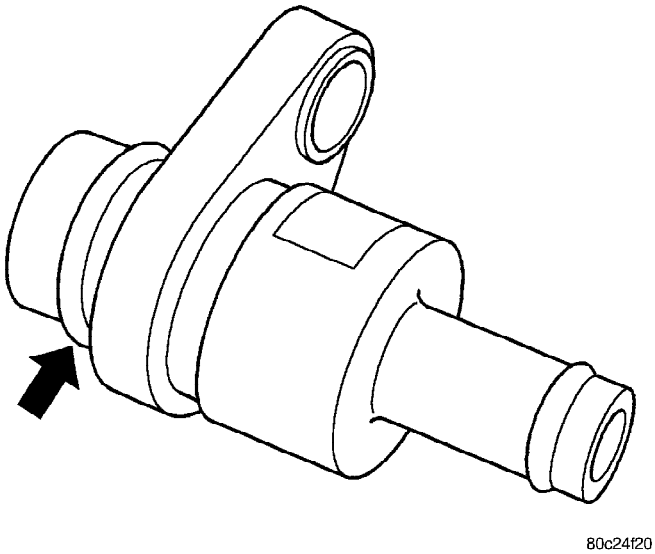

Fig. 13 PCV VALVE - 1.6L

INSTALLATION - 1.6L

(1) Lubericate the O-ring on the valve (Fig. 13).
(2) Install the PCV Valve (Fig. 12) and tighen the bolt to 8.1 N·m (72 in. lbs.).
(3) Install the hose.

VAPOR CANISTER

DESCRIPTION

The canister mounts to a bracket on top of the fuel tank in the rear of the vehicle (Fig. 14). The vacuum and vapor tube connect to the top of the canister.

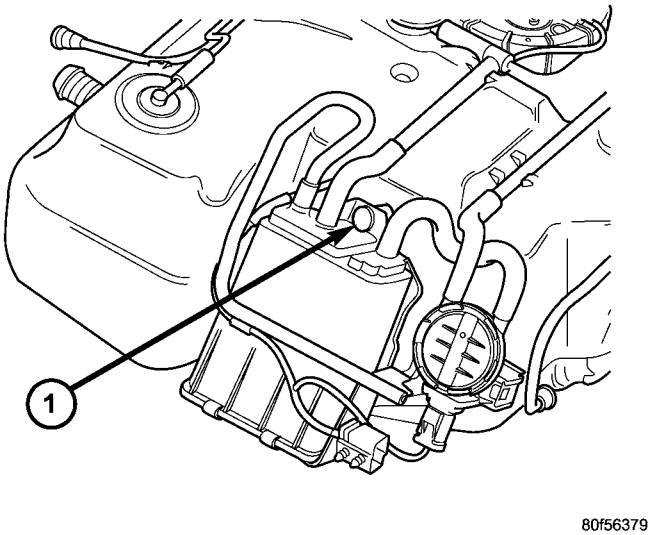

Fig. 14 EVAP Canister

1 - PUSH PIN

OPERATION

All vehicles use a maintenance free, evaporative (EVAP) canister. Fuel tank vapors vent into the canister. The canister temporarily holds the fuel vapors until intake manifold vacuum draws them into the combustion chamber. The Powertrain Control Module (PCM) purges the canister through the proportional purge solenoid. The PCM purges the canister at predetermined intervals and engine conditions.

Purge Free Cells

Purge-free memory cells are used to identify the fuel vapor content of the evaporative canister. Since the evaporative canister is not purged 100% of the time, the PCM stores information about the evaporative canister's vapor content in a memory cell.

The purge-free cells are constructed similar to certain purge-normal cells. The purge-free cells can be monitored by the DRB III® Scan Tool. The only difference between the purge-free cells and normal adaptive cells is that in purge-free, the purge is completely turned off. This gives the PCM the ability to compare purge and purge-free operation.

VAPOR CANISTER (Continued)

REMOVAL

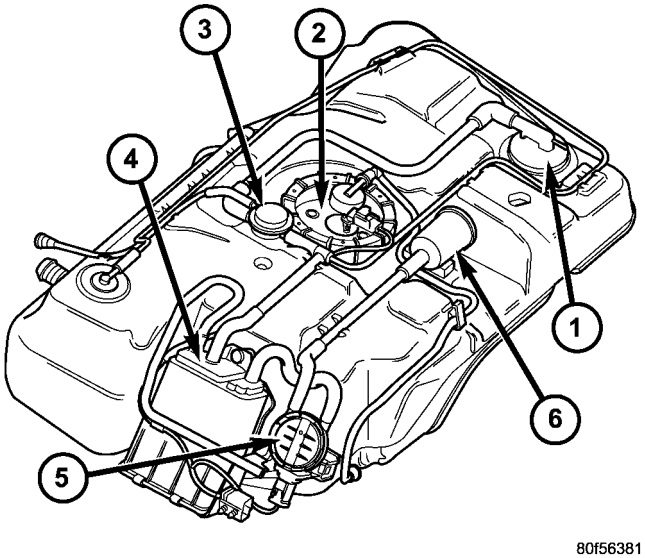

Fig. 15 Fuel Tank Assembly

1 - CONTROL VALVE
2 - FUEL PUMP
3 - FLOW MANAGEMENT VALVE
4 - EVAP CANISTOR
5 - NATURAL VACUUM LEAK DETECTION VALVE
6 - FILTER

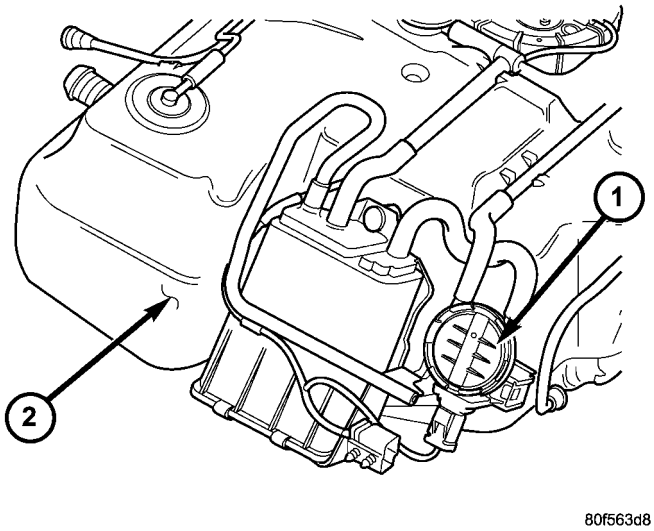

Fig. 16 EVAP System

1 - NVLD
2 - FUEL TANK

(1) Release fuel pressure, Refer to Fuel System Pressure Release Procedure in the Fuel Delivery section.

(2) Remove the air cleaner lid, disconnect the inlet air temperature sensor and makeup air hose.

(3) Remove the negative battery cable.

(4) Raise vehicle and support.

(5) Drain fuel tank, refer to Draining Fuel Tank in the Fuel Delivery section.

(6) Remove fuel tank and EVAP system, refer to the Fuel Tank removal/installation section in the Fuel Delivery section (Fig. 15).

(7) Remove the push pin (Fig. 17).

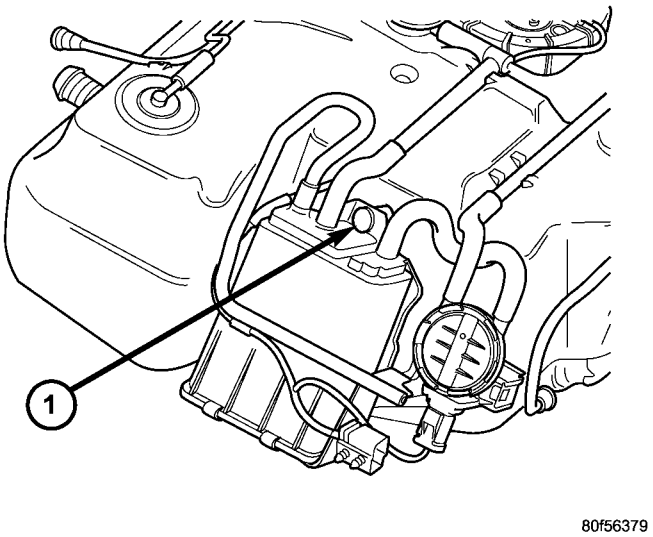

Fig. 17 EVAP Canister

1 - PUSH PIN

(8) Remove hoses from EVAP canister (Fig. 16).

(9) Spread spring clips (Fig. 18) on the side of EVAP canister and tip canister out and away from bracket tabs (Fig. 19).

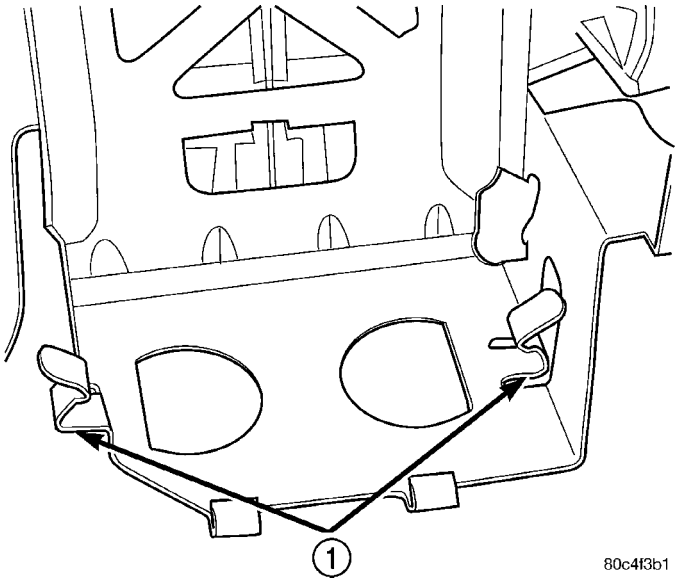

Fig. 18 Spring Clips

1 - SPRING CLIPS

VAPOR CANISTER (Continued)

INSTALLATION

(1) Install EVAP canister over bracket tabs (Fig. 19).

(2) Push canister back and into the bracket until the spring clips snap over the edge of the canister (Fig. 18).

(3) Install the push pin through the EVAP canister and the bracket and into the fuel tank (Fig. 17).

(4) Install hoses and lines.

(5) Install the fuel tank and EVAP system, refer to the Fuel Tank removal/installation section in the Fuel Delivery section.

(6) Lower vehicle.

(7) Install the negative battery cable.

(8) Install the air cleaner lid, connect the inlet air temperature sensor and makeup air hose.

(9) Fill fuel tank. Use the DRBIII® scan tool to pressurize the fuel system. Check for leaks.

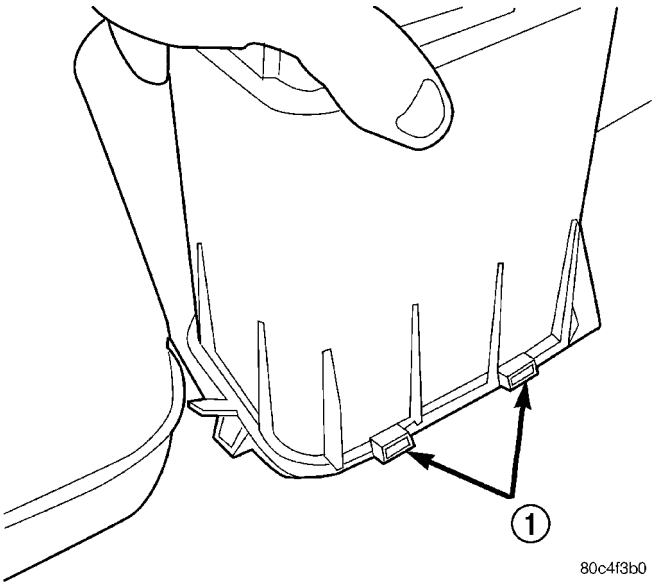

Fig. 19 Bracket Tabs

1 - TABS

ON-BOARD DIAGNOSTICS

TABLE OF CONTENTS

page

TASK MANAGER
DESCRIPTION 22
OPERATION 22

TASK MANAGER

DESCRIPTION

The PCM is responsible for efficiently coordinating the operation of all the emissions-related components. The PCM is also responsible for determining if the diagnostic systems are operating properly. The software designed to carry out these responsibilities is call the “Task Manager”.

OPERATION

The Task Manager determines when tests happen and when functions occur. Many of the diagnostic steps required by OBD II must be performed under specific operating conditions. The Task Manager software organizes and prioritizes the diagnostic procedures. The job of the Task Manager is to determine if conditions are appropriate for tests to be run, monitor the parameters for a trip for each test, and record the results of the test. Following are the responsibilities of the Task Manager software:

- Test Sequence
- MIL Illumination
- Diagnostic Trouble Codes (DTCs)
- Trip Indicator
- Freeze Frame Data Storage
- Similar Conditions Window

Test Sequence

In many instances, emissions systems must fail diagnostic tests more than once before the PCM illuminates the MIL. These tests are known as ’two trip monitors.’ Other tests that turn the MIL lamp on after a single failure are known as ’one trip monitors.’ A trip is defined as ’start the vehicle and operate it to meet the criteria necessary to run the given monitor.’

Many of the diagnostic tests must be performed under certain operating conditions. However, there are times when tests cannot be run because another test is in progress (conflict), another test has failed (pending) or the Task Manager has set a fault that may cause a failure of the test (suspend).

- **Pending**

Under some situations the Task Manager will not run a monitor if the MIL is illuminated and a fault is stored from another monitor. In these situations, the Task Manager postpones monitors **pending** resolution of the original fault. The Task Manager does not run the test until the problem is remedied.

For example, when the MIL is illuminated for an Oxygen Sensor fault, the Task Manager does not run the Catalyst Monitor until the Oxygen Sensor fault is remedied. Since the Catalyst Monitor is based on signals from the Oxygen Sensor, running the test would produce inaccurate results.

- **Conflict**

There are situations when the Task Manager does not run a test if another monitor is in progress. In these situations, the effects of another monitor running could result in an erroneous failure. If this **conflict** is present, the monitor is not run until the conflicting condition passes. Most likely the monitor will run later after the conflicting monitor has passed.

For example, if the Fuel System Monitor is in progress, the Task Manager does not run the catalyst Monitor. Since both tests monitor changes in air/fuel ratio and adaptive fuel compensation, the monitors will conflict with each other.

- **Suspend**

Occasionally the Task Manager may not allow a two trip fault to mature. The Task Manager will **suspend** the maturing of a fault if a condition exists that may induce an erroneous failure. This prevents illuminating the MIL for the wrong fault and allows more precise diagnosis.

For example, if the PCM is storing a one trip fault for the Oxygen Sensor and the catalyst monitor, the Task Manager may still run the catalyst Monitor but will suspend the results until the Oxygen Sensor Monitor either passes or fails. At that point the Task Manager can determine if the catalyst system is actually failing or if an Oxygen Sensor is failing.

MIL Illumination

The PCM Task Manager carries out the illumination of the MIL. The Task Manager triggers MIL illumination upon test failure, depending on monitor failure criteria.

TASK MANAGER (Continued)

The Task Manager Screen shows both a Requested MIL state and an Actual MIL state. When the MIL is illuminated upon completion of a test for a good trip, the Requested MIL state changes to OFF. However, the MIL remains illuminated until the next key cycle. (On some vehicles, the MIL will actually turn OFF during the thirdgood trip) During the key cycle for the third good trip, the Requested MIL state is OFF, while the Actual MIL state is ON. After the next key cycle, the MIL is not illuminated and both MIL states read OFF.

Diagnostic Trouble Codes (DTCs)

With OBD II, different DTC faults have different priorities according to regulations. As a result, the priorities determine MIL illumination and DTC erasure. DTCs are entered according to individual priority. DTCs with a higher priority overwrite lower priority DTCs.

Priorities

- Priority 0 —Non-emissions related trouble codes.
- Priority 1 — One trip failure of a two trip fault for non-fuel system and non-misfire. (MIL Off)
- Priority 2 — One trip failure of a two trip fault for fuel system (rich/lean) or misfire. (MIL Off)
- Priority 3 — Two trip failure for a non-fuel system and non-misfire or matured one trip comprehensive component fault. (MIL On)
- Priority 4 — Two trip failure or matured fault for fuel system (rich/lean) and misfire or one trip catalyst damaging misfire. Catalyst damage misfire is a 2 trip MIL. The MIL flashes on the first trip when catalyst damage misfire levels are present. (MIL On)

Non-emissions related failures have no priority. One trip failures of two trip faults have low priority. Two trip failures or matured faults have higher priority. One and two trip failures of fuel system and misfire monitor take precedence over non-fuel system and non-misfire failures.

DTC Self Erasure

With one trip components or systems, the MIL is illuminated upon test failure and DTCs are stored.

Two trip monitors are components requiring failure in two consecutive trips for MIL illumination. Upon failure of the first test, the Task Manager enters a maturing code. If the component fails the test for a second time the code matures and a DTC is set.

After three good trips the MIL is extinguished and the Task Manager automatically switches the trip counter to a warm-up cycle counter. DTCs are automatically erased following 40 warm-up cycles if the component does not fail again.

For misfire and fuel system monitors, the component must pass the test under a Similar Conditions Window in order to record a good trip. A Similar Conditions Window is when engine RPM is within ±375 RPM and load is within ±20% of when the fault occurred.

NOTE: It is important to understand that a component does not have to fail under a similar window of operation to mature. It must pass the test under a Similar Conditions Window when it failed to record a Good Trip for DTC erasure for misfire and fuel system monitors.

DTCs can be erased anytime with a DRBIII®. Erasing the DTC with the DRBIII® erases all OBD II information. The DRBIII® automatically displays a warning that erasing the DTC will also erase all OBD II monitor data. This includes all counter information for warm-up cycles, trips and Freeze Frame.

Trip Indicator

The **Trip** is essential for running monitors and extinguishing the MIL. In OBD II terms, a trip is a set of vehicle operating conditions that must be met for a specific monitor to run. All trips begin with a key cycle.

Good Trip

The Good Trip counters are as follows:

- Global Good Trip
- Fuel System Good Trip
- Misfire Good Trip
- Alternate Good Trip (appears as a Global Good Trip on DRBIII®)
  - Comprehensive Components
  - Major Monitor
- Warm-Up Cycles

Global Good Trip

To increment a Global Good Trip, the Oxygen sensor and Catalyst efficiency monitors must have run and passed, and 2 minutes of engine run time.

Fuel System Good Trip

To count a good trip (three required) and turn off the MIL, the following conditions must occur:

- Engine in closed loop
- Operating in Similar Conditions Window
- Short Term multiplied by Long Term less than threshold
- Less than threshold for a predetermined time

If all of the previous criteria are met, the PCM will count a good trip (three required) and turn off the MIL.

Misfire Good Trip

If the following conditions are met the PCM will count one good trip (three required) in order to turn off the MIL:

- Operating in Similar Condition Window
- 1000 engine revolutions with no misfire

Alternate Good Trip

TASK MANAGER (Continued)

Alternate Good Trips are used in place of Global Good Trips for Comprehensive Components and Major Monitors. If the Task Manager cannot run a Global Good Trip because a component fault is stopping the monitor from running, it will attempt to count an Alternate Good Trip.

The Task Manager counts an Alternate Good Trip for Comprehensive components when the following conditions are met:

- Two minutes of engine run time, idle or driving
- No other faults occur

The Task Manager counts an Alternate Good Trip for a Major Monitor when the monitor runs and passes. Only the Major Monitor that failed needs to pass to count an Alternate Good Trip.

Warm-Up Cycles

Once the MIL has been extinguished by the Good Trip Counter, the PCM automatically switches to a Warm-Up Cycle Counter that can be viewed on the DRBIII®. Warm-Up Cycles are used to erase DTCs and Freeze Frames. Forty Warm-Up cycles must occur in order for the PCM to self-erase a DTC and Freeze Frame. A Warm-Up Cycle is defined as follows:

- Engine coolant temperature must start below and rise above 160° F
- Engine coolant temperature must rise by 40° F
- No further faults occur

Freeze Frame Data Storage

Once a failure occurs, the Task Manager records several engine operating conditions and stores it in a Freeze Frame. The Freeze Frame is considered one frame of information taken by an on-board data recorder. When a fault occurs, the PCM stores the input data from various sensors so that technicians can determine under what vehicle operating conditions the failure occurred.

The data stored in Freeze Frame is usually recorded when a system fails the first time for two trip faults. Freeze Frame data will only be overwritten by a different fault with a higher priority.

CAUTION: Erasing DTCs, either with the DRBIII®; or by disconnecting the battery, also clears all Freeze Frame data.

Similar Conditions Window

The Similar Conditions Window displays information about engine operation during a monitor. Absolute MAP (engine load) and Engine RPM are stored in this window when a failure occurs. There are two different Similar conditions Windows: Fuel System and Misfire.

FUEL SYSTEM

- **Fuel System Similar Conditions Window** — An indicator that 'Absolute MAP When Fuel Sys Fail' and 'RPM When Fuel Sys Failed' are all in the same range when the failure occurred. Indicated by switching from 'NO' to 'YES'.
- **Absolute MAP When Fuel Sys Fail** — The stored MAP reading at the time of failure. Informs the user at what engine load the failure occurred.
- **Absolute MAP** — A live reading of engine load to aid the user in accessing the Similar Conditions Window.
- **RPM When Fuel Sys Fail** — The stored RPM reading at the time of failure. Informs the user at what engine RPM the failure occurred.
- **Engine RPM** — A live reading of engine RPM to aid the user in accessing the Similar Conditions Window.
- **Adaptive Memory Factor** — The PCM utilizes both Short Term Compensation and Long Term Adaptive to calculate the Adaptive Memory Factor for total fuel correction.
- **Upstream O2S Volts** — A live reading of the Oxygen Sensor to indicate its performance. For example, stuck lean, stuck rich, etc.
- **SCW Time in Window (Similar Conditions Window Time in Window)** — A timer used by the PCM that indicates that, after all Similar Conditions have been met, if there has been enough good engine running time in the SCW without failure detected. This timer is used to increment a Good Trip.
- **Fuel System Good Trip Counter** — A Trip Counter used to turn OFF the MIL for Fuel System DTCs. To increment a Fuel System Good Trip, the engine must be in the Similar Conditions Window, Adaptive Memory Factor must be less than calibrated threshold and the Adaptive Memory Factor must stay below that threshold for a calibrated amount of time.
- **Test Done This Trip** — Indicates that the monitor has already been run and completed during the current trip.

MISFIRE

- **Same Misfire Warm-Up State** — Indicates if the misfire occurred when the engine was warmed up (above 160° F).
- **In Similar Misfire Window** — An indicator that 'Absolute MAP When Misfire Occurred' and 'RPM When Misfire Occurred' are all in the same range when the failure occurred. Indicated by switching from 'NO' to 'YES'.
- **Absolute MAP When Misfire Occurred** — The stored MAP reading at the time of failure. Informs the user at what engine load the failure occurred.

TASK MANAGER (Continued)

- **Absolute MAP** — A live reading of engine load to aid the user in accessing the Similar Conditions Window.
- **RPM When Misfire Occurred** — The stored RPM reading at the time of failure. Informs the user at what engine RPM the failure occurred.
- **Engine RPM** — A live reading of engine RPM to aid the user in accessing the Similar Conditions Window.
- **Adaptive Memory Factor** — The PCM utilizes both Short Term Compensation and Long Term Adaptive to calculate the Adaptive Memory Factor for total fuel correction.
- **200 Rev Counter** — Counts 0–100 720 degree cycles.
- **SCW Cat 200 Rev Counter** — Counts when in similar conditions.
- **SCW FTP 1000 Rev Counter** — Counts 0–4 when in similar conditions.
- **Misfire Good Trip Counter** — Counts up to three to turn OFF the MIL.

Description	Group-Page
ABS - INSTALLATION, LHD WITH	5-41
ABS - INSTALLATION, LHD WITHOUT	5-41
ABS - REMOVAL, LHD WITH	5-39
ABS - REMOVAL, LHD WITHOUT	5-40
ABS FASTENER TORQUE - SPECIFICATIONS	5-78
ABSORBER - DESCRIPTION, SHOCK	2-41
ABSORBER - DIAGNOSIS AND TESTING, SHOCK	2-41
ABSORBER - INSTALLATION, SHOCK	2-41
ABSORBER - REMOVAL, SHOCK	2-41
A/C APPLICATION TABLE, SPECIFICATIONS	24-10,24-66
A/C COMPRESSOR CLUTCH COIL - INSTALLATION	24-17,24-73
A/C COMPRESSOR CLUTCH COIL - REMOVAL	24-16,24-72
A/C COMPRESSOR CLUTCH RELAY - DESCRIPTION	24-11,24-67
A/C COMPRESSOR CLUTCH RELAY - INSTALLATION	24-12,24-68
A/C COMPRESSOR CLUTCH RELAY - OPERATION	24-12,24-68
A/C COMPRESSOR CLUTCH RELAY - REMOVAL	24-12,24-68
A/C CONDENSER - DESCRIPTION	24-36,24-90
A/C CONDENSER - INSTALLATION	24-37,24-91
A/C CONDENSER - OPERATION	24-36,24-91
A/C CONDENSER - REMOVAL	24-36,24-91
A/C DISCHARGE LINE - INSTALLATION	24-37,24-93
A/C DISCHARGE LINE - REMOVAL	24-37,24-92
A/C EVAPORATOR - DESCRIPTION	24-38
A/C EVAPORATOR - INSTALLATION	24-39,24-94
A/C EVAPORATOR - OPERATION	24-38
A/C EVAPORATOR - REMOVAL	24-38,24-93
A/C HEATER CONTROL - DESCRIPTION	24-13,24-69
A/C HEATER CONTROL - INSTALLATION	24-15,24-71
A/C HEATER CONTROL - REMOVAL	24-15,24-71
A/C HIGH PRESSURE SWITCH - DESCRIPTION	24-18,24-74
A/C HIGH PRESSURE SWITCH - INSTALLATION	24-18,24-74
A/C HIGH PRESSURE SWITCH - REMOVAL	24-18,24-74
A/C LOW PRESSURE CLUTCH CYCLING SWITCH - DIAGNOSIS AND TESTING	24-19,24-75
A/C LOW PRESSURE SWITCH - DESCRIPTION	24-19,24-75
A/C LOW PRESSURE SWITCH - INSTALLATION	24-19,24-75
A/C LOW PRESSURE SWITCH - OPERATION	24-19,24-75
A/C LOW PRESSURE SWITCH - REMOVAL	24-19,24-75
A/C PERFORMANCE TEST - DIAGNOSIS AND TESTING	24-4,24-60
A/C PRESSURE TRANSDUCER - DESCRIPTION	24-20,24-76
A/C PRESSURE TRANSDUCER - DIAGNOSIS AND TESTING	24-20,24-76
A/C PRESSURE TRANSDUCER - INSTALLATION	24-20,24-76
A/C PRESSURE TRANSDUCER - OPERATION	24-20,24-76
A/C PRESSURE TRANSDUCER - REMOVAL	24-20,24-76
A/C SYSTEM - STANDARD PROCEDURE, CHARGING	24-6,24-63
A/C VARIABLE ORIFICE TUBE - DESCRIPTION	24-111,24-40,24-55
ACCELERATOR PEDAL - INSTALLATION	14-27
ACCELERATOR PEDAL - REMOVAL	14-26
ACCELERATOR PEDAL POSITION SENSOR - 1.6L - DESCRIPTION	14-27
ACCESS PANEL - INSTALLATION, LIFTGATE CHMSL	23-13
ACCESS PANEL - REMOVAL, LIFTGATE CHMSL	23-13
ACCESS PULLEY SPLASH SHIELD - INSTALLATION, FRONT SIDE RAIL	23-38
ACCESS PULLEY SPLASH SHIELD - REMOVAL, FRONT SIDE RAIL	23-38
ACCESSORY DRIVE - 1.6L SOHC - DESCRIPTION	7-3
ACCESSORY DRIVE BELT - CLEANING	7-4
ACCESSORY DRIVE BELT - INSPECTION	7-4
ACCESSORY DRIVE BELT - INSTALLATION	7-4
ACCESSORY DRIVE BELT - REMOVAL	7-4
ACCESSORY DRIVE BELT DIAGNOSIS - DIAGNOSIS AND TESTING	7-3
ACCESSORY DRIVE BELT TENSIONER - INSTALLATION	7-5
ACCESSORY DRIVE BELT TENSIONER - REMOVAL	7-5
ACCESSORY DRIVE BELTS, DIAGNOSIS AND TESTING	7-7
ACCESSORY SWITCH BEZEL - INSTALLATION	23-46
ACCESSORY SWITCH BEZEL - REMOVAL	23-46
ACCUMULATOR - DESCRIPTION	24-41,24-95
ACCUMULATOR - DESCRIPTION	21-223
ACCUMULATOR - INSTALLATION	24-41,24-96
ACCUMULATOR - OPERATION	24-41,24-95
ACCUMULATOR - OPERATION	21-223
ACCUMULATOR - REMOVAL	24-41,24-95
ACTIVATION UNLOCK - STANDARD PROCEDURE, DOUBLE	8N-3
ACTUATION SYSTEM, SPECIFICATIONS - BRAKE	5-8
ACTUATOR - DESCRIPTION, RECIRCULATION DOOR	24-23,24-78
ACTUATOR - INSTALLATION, FRONT DOOR INSIDE HANDLE	23-23
ACTUATOR - INSTALLATION, RECIRCULATION DOOR	24-24,24-79
ACTUATOR - REMOVAL, FRONT DOOR INSIDE HANDLE	23-22
ACTUATOR - REMOVAL, RECIRCULATION DOOR	24-23,24-79
ADAPTER - FRONT - INSTALLATION, DISC BRAKE CALIPER	5-34
ADAPTER - FRONT - REMOVAL, DISC BRAKE CALIPER	5-33
ADAPTER - INSTALLATION, OIL FILTER	9-130,9-209
ADAPTER - REMOVAL, OIL FILTER	9-130,9-209
ADAPTIVE MEMORIES, OPERATION - FUEL CORRECTION OR	14-23
ADDING ADDITIONAL COOLANT - STANDARD PROCEDURE	7-17,7-43
ADDITIONAL COOLANT - STANDARD PROCEDURE, ADDING	7-17,7-43
ADHESIVES - SPECIFICATIONS, STRUCTURAL	23-114
ADJUSTER - DESCRIPTION, ROCKER ARM SHAFT / ROCKER ARM / LASH	9-34
ADJUSTER - DIAGNOSIS AND TESTING, DRUM BRAKE AUTOMATIC	5-14
ADJUSTER - INSTALLATION, FRONT SEAT BELT HEIGHT	8O-12
ADJUSTER - INSTALLATION, ROCKER ARM SHAFT / ROCKER ARM / LASH	9-35
ADJUSTER - REMOVAL, FRONT SEAT BELT HEIGHT	8O-12
ADJUSTER - REMOVAL, ROCKER ARM SHAFT / ROCKER ARM / LASH	9-34
ADJUSTER LOCKOUT - STANDARD PROCEDURE, PARKING BRAKE AUTOMATIC	5-62
ADJUSTER NOISE DIAGNOSIS - DIAGNOSIS AND TESTING, LASH	9-9
ADJUSTER NOISE DIAGNOSIS, DIAGNOSIS AND TESTING - HYDRAULIC LASH	9-105,9-184
ADJUSTMENT / SHIM SELECTION, ADJUSTMENTS - DIFFERENTIAL BEARING PRELOAD	21-124
ADJUSTMENT - STANDARD PROCEDURE, COMPASS VARIATION	8M-3
ADJUSTMENT, ADJUSTMENTS	5-71
ADJUSTMENT, ADJUSTMENTS	9-54
ADJUSTMENT, ADJUSTMENTS - DIFFERENTIAL BEARING PRELOAD MEASUREMENT	21-229
ADJUSTMENT, ADJUSTMENTS - ENGINE TORQUE STRUT	9-125,9-205
ADJUSTMENT, ADJUSTMENTS - FRONT DOOR LATCH	23-24
ADJUSTMENT, ADJUSTMENTS - REAR DOOR LATCH	23-32
ADJUSTMENT, ADJUSTMENTS - SUNROOF GLASS PANEL	23-86
ADJUSTMENT, DRUM BRAKE SHOES	5-23
ADJUSTMENT, FRONT WIPER ARMS	8R-7
ADJUSTMENT, FRONT WIPER ARMS - RHD	8R-7
ADJUSTMENT, GEARSHIFT CROSSOVER CABLE	21-133,21-66
ADJUSTMENTS - ADJUSTMENT	5-71
ADJUSTMENTS - ADJUSTMENT	9-54
ADJUSTMENTS - BELT TENSION	7-11
ADJUSTMENTS - BRAKE/TRANSMISSION SHIFT INTERLOCK SYSTEM	21-270
ADJUSTMENTS - DIFFERENTIAL BEARING PRELOAD ADJUSTMENT / SHIM SELECTION	21-124
ADJUSTMENTS - DIFFERENTIAL BEARING PRELOAD MEASUREMENT AND ADJUSTMENT	21-229
ADJUSTMENTS - ENGINE TORQUE STRUT ADJUSTMENT	9-125,9-205
ADJUSTMENTS - EXHAUST SYSTEM ALIGNMENT	11-3
ADJUSTMENTS - FRONT DOOR LATCH ADJUSTMENT	23-24
ADJUSTMENTS - GEARSHIFT CABLE	21-237
ADJUSTMENTS - REAR DOOR LATCH ADJUSTMENT	23-32
ADJUSTMENTS - SUNROOF GLASS PANEL ADJUSTMENT	23-86
AERATION - DIAGNOSIS AND TESTING, COOLING SYSTEM	7-14
AERATION, DIAGNOSIS AND TESTING - COOLING SYSTEM	7-40
AFTER AN AIRBAG DEPLOYMENT - STANDARD PROCEDURE, SERVICE	8O-5
AIR CLEANER ELEMENT - INSTALLATION	9-173,9-25,9-96
AIR CLEANER ELEMENT - REMOVAL	9-173,9-25,9-96
AIR CLEANER HOUSING - INSTALLATION	9-173,9-26,9-96
AIR CLEANER HOUSING - REMOVAL	9-173,9-25,9-96
AIR CONDITIONING - DESCRIPTION, HEATER	24-25,24-81
AIR CONTROL MOTOR - DESCRIPTION, IDLE	14-37
AIR CONTROL MOTOR - INSTALLATION, IDLE	14-37
AIR CONTROL MOTOR - OPERATION, IDLE	14-37
AIR CONTROL MOTOR - REMOVAL, IDLE	14-37
AIR COOLER - INSTALLATION, CHARGE	11-21
AIR COOLER - REMOVAL, CHARGE	11-20
AIR COOLER HOSES - INSTALLATION, CHARGE	11-21
AIR COOLER HOSES - REMOVAL, CHARGE	11-19
AIR FILTER - EXPORT - DESCRIPTION	24-26,24-81
AIR FILTER - EXPORT - INSTALLATION	24-26,24-82
AIR FILTER - EXPORT - REMOVAL	24-26,24-81
AIR FLOW DISTRIBUTION - DESCRIPTION	24-26,24-82
AIR FLOW DISTRIBUTION - OPERATION	24-27, 24-82
AIR GAP, SPECIFICATIONS - WHEEL SPEED SENSOR	5-78
AIR OUTLET DUCT - INSTALLATION, CENTER	24-27,24-83
AIR OUTLET DUCT - REMOVAL, CENTER	24-27,24-83
AIR OUTLETS - DESCRIPTION	24-27,24-83
AIR PRESSURE TESTS - DIAGNOSIS AND TESTING, CLUTCH	21-157
AIR TEMPERATURE SENSOR - DESCRIPTION, INLET	14-38
AIR TEMPERATURE SENSOR - INSTALLATION, INLET	14-38
AIR TEMPERATURE SENSOR - OPERATION, INLET	14-38
AIR TEMPERATURE SENSOR - REMOVAL, INLET	14-38
AIRBAG - DESCRIPTION, DRIVER	8O-7
AIRBAG - DESCRIPTION, PASSENGER	8O-13
AIRBAG - DESCRIPTION, SEAT	8O-16

Description	Group-Page
AIRBAG - INSTALLATION, DRIVER	8O-9
AIRBAG - INSTALLATION, PASSENGER	8O-15
AIRBAG - INSTALLATION, SEAT	8O-18
AIRBAG - OPERATION, DRIVER	8O-8
AIRBAG - OPERATION, PASSENGER	8O-14
AIRBAG - OPERATION, SEAT	8O-17
AIRBAG - REMOVAL, DRIVER	8O-8
AIRBAG - REMOVAL, PASSENGER	8O-14
AIRBAG - REMOVAL, SEAT	8O-17
AIRBAG CONTROL MODULE - DESCRIPTION, SIDE IMPACT	8O-19
AIRBAG CONTROL MODULE - INSTALLATION, SIDE IMPACT	8O-20
AIRBAG CONTROL MODULE - OPERATION, SIDE IMPACT	8O-19
AIRBAG CONTROL MODULE - REMOVAL, SIDE IMPACT	8O-19
AIRBAG COVER - INSTALLATION, DRIVER	8O-10
AIRBAG COVER - INSTALLATION, PASSENGER	8O-15
AIRBAG COVER - REMOVAL, DRIVER	8O-9
AIRBAG COVER - REMOVAL, PASSENGER	8O-15
AIRBAG DEPLOYMENT - STANDARD PROCEDURE, SERVICE AFTER AN	8O-5
AIRBAG SYSTEM - DIAGNOSIS AND TESTING	8O-4
AIRBAGS - STANDARD PROCEDURE, HANDLING	8O-4
AIRFLOW - DESCRIPTION, SYSTEM	24-25,24-80
AJAR SWITCH - EXPORT - INSTALLATION, HOOD	8Q-5
AJAR SWITCH - EXPORT - REMOVAL, HOOD	8Q-5
ALIGNMENT - DESCRIPTION, WHEEL	2-52
ALIGNMENT - EXPORT - STANDARD PROCEDURE, HEADLAMP UNIT	8L-13
ALIGNMENT - STANDARD PROCEDURE, FOG LAMP UNIT	8L-8
ALIGNMENT - STANDARD PROCEDURE, HEADLAMP UNIT	8L-12
ALIGNMENT - STANDARD PROCEDURE, WHEEL	2-58
ALIGNMENT, ADJUSTMENTS - EXHAUST SYSTEM	11-3
ALIGNMENT, SPECIFICATIONS - WHEEL	2-60
AMBIENT TEMP SENSOR - DESCRIPTION	8M-5
AMBIENT TEMP SENSOR - INSTALLATION	8M-6
AMBIENT TEMP SENSOR - OPERATION	8M-5
AMBIENT TEMP SENSOR - REMOVAL	8M-6
AMBIENT TEMPERATURE SENSOR - DIAGNOSIS AND TESTING	8M-5
AN AIRBAG DEPLOYMENT - STANDARD PROCEDURE, SERVICE AFTER	8O-5
ANCHOR BEZEL - INSTALLATION, CHILD SEAT TETHER	23-73
ANCHOR BEZEL - REMOVAL, CHILD SEAT TETHER	23-73
ANTENNA - SATELLITE RADIO - DESCRIPTION	8A-6
ANTENNA - SATELLITE RADIO - INSTALLATION	8A-6
ANTENNA - SATELLITE RADIO - OPERATION	8A-6
ANTENNA - SATELLITE RADIO - REMOVAL	8A-6
ANTENNA BODY & CABLE - DESCRIPTION	8A-3
ANTENNA BODY & CABLE - INSTALLATION	8A-5
ANTENNA BODY & CABLE - OPERATION	8A-3
ANTENNA BODY & CABLE - REMOVAL	8A-5
ANTENNA BODY AND CABLE - DIAGNOSIS AND TESTING	8A-4
ANTENNA CABLE - SATELLITE RADIO - DESCRIPTION	8A-7
ANTENNA CABLE - SATELLITE RADIO - INSTALLATION	8A-7
ANTENNA CABLE - SATELLITE RADIO - REMOVAL	8A-7
ANTILOCK BRAKE - DESCRIPTION, CONTROLLER	8E-1
ANTILOCK BRAKE - INSTALLATION, CONTROLLER	8E-3
ANTILOCK BRAKE - OPERATION, CONTROLLER	8E-1
ANTILOCK BRAKE - REMOVAL, CONTROLLER	8E-2
ANTILOCK BRAKE SYSTEM - DESCRIPTION	5-73
ANTILOCK BRAKE SYSTEM - OPERATION	5-74
ANTILOCK BRAKE SYSTEM BLEEDING - STANDARD PROCEDURE	5-77
A-PILLAR TRIM - INSTALLATION	23-60
A-PILLAR TRIM - REMOVAL	23-60
APPLICATION TABLE, SPECIFICATIONS - A/C	24-10,24-66
APPLIQUE - INSTALLATION, FRONT DOOR	23-19
APPLIQUE - INSTALLATION, REAR DOOR	23-29
APPLIQUE - REMOVAL, FRONT DOOR	23-19
APPLIQUE - REMOVAL, REAR DOOR	23-28
ARM - DESCRIPTION, LOWER CONTROL	2-13
ARM - DIAGNOSIS AND TESTING, LOWER CONTROL	2-13
ARM - INSTALLATION, LOWER CONTROL	2-17
ARM / LASH ADJUSTER - DESCRIPTION, ROCKER ARM SHAFT / ROCKER	9-34
ARM / LASH ADJUSTER - INSTALLATION, ROCKER ARM SHAFT / ROCKER	9-35
ARM / LASH ADJUSTER - REMOVAL, ROCKER ARM SHAFT / ROCKER	9-34
ARM - OPERATION, LOWER CONTROL	2-13
ARM - REMOVAL, LOWER CONTROL	2-13
ARM (BALL JOINT) - ASSEMBLY, LOWER CONTROL	2-16
ARM (BALL JOINT) - DISASSEMBLY, LOWER CONTROL	2-15
ARM (REAR ISOLATOR BUSHING) - ASSEMBLY, LOWER CONTROL	2-17
ARM (REAR ISOLATOR BUSHING) - DISASSEMBLY, LOWER CONTROL	2-15
ARM SHAFT / ROCKER ARM / LASH ADJUSTER - DESCRIPTION, ROCKER	9-34
ARM SHAFT / ROCKER ARM / LASH ADJUSTER - INSTALLATION, ROCKER	9-35
ARM SHAFT / ROCKER ARM / LASH ADJUSTER - REMOVAL, ROCKER	9-34
ARMS - ADJUSTMENT, FRONT WIPER	8R-7
ARMS - INSPECTION, ROCKER	9-106,9-185
ARMS - INSTALLATION, FRONT WIPER	8R-7
ARMS - INSTALLATION, REAR WIPER	8R-15
ARMS - INSTALLATION, ROCKER	9-106,9-185
ARMS - REMOVAL, FRONT WIPER	8R-6
ARMS - REMOVAL, REAR WIPER	8R-14
ARMS - REMOVAL, ROCKER	9-106,9-185
ARMS - RHD - ADJUSTMENT, FRONT WIPER	8R-7
AUDIO - DESCRIPTION	8A-1
AUDIO - DIAGNOSIS AND TESTING	8A-2
AUDIO - OPERATION	8A-1
AUTO SHUT DOWN RELAY - DESCRIPTION	8I-3
AUTO SHUT DOWN RELAY - OPERATION	8I-3
AUTOMATIC ADJUSTER - DIAGNOSIS AND TESTING, DRUM BRAKE	5-14
AUTOMATIC ADJUSTER LOCKOUT - STANDARD PROCEDURE, PARKING BRAKE	5-62
AUTOMATIC BELT TENSIONER AND PULLEY - DESCRIPTION	7-11
AUTOMATIC BELT TENSIONER AND PULLEY - INSTALLATION	7-11
AUTOMATIC BELT TENSIONER AND PULLEY - REMOVAL	7-11
AUTOMATIC TRANSAXLE - DESCRIPTION, 41TE	21-151
AUTOMATIC TRANSAXLE - INSTALLATION, PEDAL - WITH	5-43
AUTOMATIC TRANSAXLE - OPERATION, 41TE	21-153
AUTOMATIC TRANSAXLE - REMOVAL, PEDAL - WITH	5-42
AUTOMATIC TRANSMISSION OIL COOLER - CLEANING	7-62
AUTOMATIC TRANSMISSION OIL COOLER - DESCRIPTION	7-61
AUTOMATIC TRANSMISSION OIL COOLER - INSPECTION	7-63
AUTOMATIC TRANSMISSION OIL COOLER - INSTALLATION	7-63
AUTOMATIC TRANSMISSION OIL COOLER - REMOVAL	7-61
AXLE - FRONT WHEEL DRIVE REAR - DESCRIPTION	2-29
AXLE - FRONT WHEEL DRIVE REAR - INSPECTION	2-33
AXLE - FRONT WHEEL DRIVE REAR - INSTALLATION	2-33
AXLE - FRONT WHEEL DRIVE REAR - OPERATION	2-29
AXLE - FRONT WHEEL DRIVE REAR - REMOVAL	2-29
AXLE PIVOT BUSHING - INSTALLATION	2-38
AXLE PIVOT BUSHING - REMOVAL	2-37
AXLE SEAL - INSTALLATION	21-118,21-48
AXLE SEAL - REMOVAL	21-118,21-48
BACK - INSTALLATION, FRONT SEAT	23-69
BACK - INSTALLATION, REAR SEAT	23-71
BACK - REMOVAL, FRONT SEAT	23-69
BACK - REMOVAL, REAR SEAT	23-71
BACK COVER - INSTALLATION, FRONT SEAT	23-69
BACK COVER - INSTALLATION, REAR SEAT	23-71
BACK COVER - REMOVAL, FRONT SEAT	23-69
BACK COVER - REMOVAL, REAR SEAT	23-71
BACK CUSHION / COVER - INSTALLATION, REAR SEAT	23-72
BACK CUSHION / COVER - REMOVAL, REAR SEAT	23-71
BACKLITE - INSTALLATION	23-74
BACKLITE - REMOVAL	23-74
BACK-UP LAMP - INSTALLATION	8L-2
BACK-UP LAMP - REMOVAL	8L-2
BACK-UP LAMP SWITCH - INSTALLATION	21-118
BACKUP LAMP SWITCH - INSTALLATION	21-49
BACK-UP LAMP SWITCH - REMOVAL	21-118
BACKUP LAMP SWITCH - REMOVAL	21-48
BACK-UP LAMP UNIT - INSTALLATION	8L-3
BACK-UP LAMP UNIT - REMOVAL	8L-3
BADGING - INSTALLATION, EXTERIOR	23-36
BADGING - REMOVAL, EXTERIOR	23-35
BADGING/TAPE - INSTALLATION	23-36
BADGING/TAPE - REMOVAL	23-36
BALANCE - STANDARD PROCEDURE, TIRE AND WHEEL	22-3
BALANCE SHAFTS AND CARRIER ASSEMBLY - DESCRIPTION	9-232
BALANCE SHAFTS AND CARRIER ASSEMBLY - INSTALLATION	9-233
BALANCE SHAFTS AND CARRIER ASSEMBLY - OPERATION	9-232
BALANCE SHAFTS AND CARRIER ASSEMBLY - REMOVAL	9-232
BALL JOINT - DIAGNOSIS AND TESTING	2-12
BALL JOINT SEAL BOOT - INSTALLATION, LOWER	2-12
BALL JOINT SEAL BOOT - REMOVAL, LOWER	2-12
BAR - DESCRIPTION, STABILIZER	2-19,2-47
BAR - INSPECTION, STABILIZER	2-19
BAR - INSTALLATION, FRONT DOOR VERTICAL GUIDE	23-25
BAR - INSTALLATION, STABILIZER	2-19,2-47
BAR - OPERATION, STABILIZER	2-19,2-47
BAR - REMOVAL, FRONT DOOR VERTICAL GUIDE	23-25
BAR - REMOVAL, STABILIZER	2-19,2-47
BAR CUSHIONS - INSTALLATION, STABILIZER	2-48
BAR CUSHIONS - REMOVAL, STABILIZER	2-47
BAR LINK - INSTALLATION, STABILIZER	2-48
BAR LINK - REMOVAL, STABILIZER	2-48
BASE - WARNING, BRAKES	5-3
BASE BRAKE BLEEDING - STANDARD PROCEDURE	5-6
BASE BRAKE SYSTEM - DESCRIPTION	5-2
BASE BRAKE SYSTEM - OPERATION	5-3
BASE BRAKE SYSTEM DIAGNOSIS CHARTS - DIAGNOSIS AND TESTING	5-3
BASE BRAKE SYSTEM, SPECIAL TOOLS	5-9
BASECOAT/CLEARCOAT FINISH - DESCRIPTION	23-66
BATTERIES - STANDARD PROCEDURE, RKE TRANSMITTER	8N-7
BATTERY - DESCRIPTION	8F-7
BATTERY - DIAGNOSIS AND TESTING	8F-8
BATTERY - OPERATION	8F-7
BATTERY CABLES - DESCRIPTION	8F-18

Description	Group-Page
BATTERY CABLES - DIAGNOSIS AND TESTING	8F-18
BATTERY CABLES - INSTALLATION	8F-20
BATTERY CABLES - OPERATION	8F-18
BATTERY CABLES - REMOVAL	8F-19
BATTERY CHARGING - STANDARD PROCEDURE, CONVENTIONAL	8F-10
BATTERY CHARGING - STANDARD PROCEDURE, SPIRAL PLATE	8F-8
BATTERY HOLDDOWN - DESCRIPTION	8F-17
BATTERY HOLDDOWN - INSTALLATION	8F-17
BATTERY HOLDDOWN - OPERATION	8F-17
BATTERY HOLDDOWN - REMOVAL	8F-17
BATTERY SYSTEM - CLEANING	8F-4
BATTERY SYSTEM - DESCRIPTION	8F-2
BATTERY SYSTEM - DIAGNOSIS AND TESTING	8F-2
BATTERY SYSTEM - INSPECTION	8F-6
BATTERY SYSTEM - OPERATION	8F-2
BATTERY SYSTEM SPECIAL TOOLS, SPECIAL TOOLS	8F-7
BATTERY TEMPERATURE SENSOR - OPERATION	8F-25
BATTERY TESTER - STANDARD PROCEDURE, USING MICRO 420	8F-11
BATTERY TRAY - DESCRIPTION	8F-20
BATTERY TRAY - OPERATION	8F-20
BATTERY TRAY SUPPORT BRACKET - INSTALLATION	8F-22
BATTERY TRAY SUPPORT BRACKET - REMOVAL	8F-22
BEARING - DESCRIPTION, CLUTCH RELEASE	6-18
BEARING - DESCRIPTION, HUB	2-39,2-6
BEARING - FITTING - STANDARD PROCEDURE, CONNECTING ROD	9-48
BEARING - INSTALLATION, CLUTCH RELEASE	6-19
BEARING - INSTALLATION, HUB	2-41,2-6
BEARING - OPERATION, CLUTCH RELEASE	6-19
BEARING - OPERATION, HUB	2-39,2-6
BEARING - REMOVAL, CLUTCH RELEASE	6-19
BEARING - REMOVAL, HUB	2-40,2-6
BEARING AND HUB - DIAGNOSIS AND TESTING, WHEEL	2-6
BEARING AND RACE - INSTALLATION, OUTPUT	21-144
BEARING AND RACE - REMOVAL, OUTPUT	21-143
BEARING AND SLEEVE - INSTALLATION, INPUT	21-136
BEARING AND SLEEVE - REMOVAL, INPUT	21-136
BEARING CLEARANCE USING PLASTIGAGE - STANDARD PROCEDURE, MEASURING	9-13,9-160,9-84
BEARING CUPS - INSTALLATION, DIFFERENTIAL	21-126
BEARING CUPS - REMOVAL, DIFFERENTIAL	21-125
BEARING OIL FEED TROUGH - INSTALLATION, REAR	21-144
BEARING OIL FEED TROUGH - REMOVAL, REAR	21-144
BEARING PRELOAD ADJUSTMENT / SHIM SELECTION, ADJUSTMENTS - DIFFERENTIAL	21-124
BEARING PRELOAD MEASUREMENT AND ADJUSTMENT, ADJUSTMENTS - DIFFERENTIAL	21-229
BEARING (REAR) - DIAGNOSIS AND TESTING, HUB	2-39
BEARINGS - DESCRIPTION, CRANKSHAFT MAIN	9-44
BELL CRANK - INSTALLATION, WATTS	2-49
BELL CRANK - REMOVAL, WATTS	2-49
BELLHOUSING - ASSEMBLY, CLUTCH	21-51
BELLHOUSING - DISASSEMBLY, CLUTCH	21-49
BELT - CLEANING, ACCESSORY DRIVE	7-4
BELT - INSPECTION, ACCESSORY DRIVE	7-4
BELT - INSTALLATION, ACCESSORY DRIVE	7-4
BELT - INSTALLATION, TIMING	9-146,9-229
BELT - REMOVAL, ACCESSORY DRIVE	7-4
BELT - REMOVAL, TIMING	9-143,9-227
BELT & RETRACTOR - INSTALLATION, FRONT SEAT	8O-11
BELT & RETRACTOR - INSTALLATION, REAR CENTER SEAT	8O-16
BELT & RETRACTOR - INSTALLATION, REAR SEAT	8O-16
BELT & RETRACTOR - REMOVAL, FRONT SEAT	8O-11
BELT & RETRACTOR - REMOVAL, REAR CENTER SEAT	8O-16
BELT & RETRACTOR - REMOVAL, REAR SEAT	8O-16
BELT BUCKLE - INSTALLATION, FRONT SEAT	8O-11
BELT BUCKLE - REMOVAL, FRONT SEAT	8O-11
BELT BUCKLE - REMOVAL, REAR SEAT	8O-16
BELT COVER(S) - INSTALLATION, TIMING	9-143,9-225
BELT COVER(S) - REMOVAL, TIMING	9-142, 9-225
BELT DIAGNOSIS - DIAGNOSIS AND TESTING, ACCESSORY DRIVE	7-3
BELT HEIGHT ADJUSTER - INSTALLATION, FRONT SEAT	8O-12
BELT HEIGHT ADJUSTER - REMOVAL, FRONT SEAT	8O-12
BELT TENSION, ADJUSTMENTS	7-11
BELT TENSIONER - INSTALLATION, ACCESSORY DRIVE	7-5
BELT TENSIONER & PULLEY - INSTALLATION, TIMING	9-148,9-231
BELT TENSIONER & PULLEY - REMOVAL, TIMING	9-148,9-231
BELT TENSIONER - REMOVAL, ACCESSORY DRIVE	7-5
BELT TENSIONER AND PULLEY - DESCRIPTION, AUTOMATIC	7-11
BELT TENSIONER AND PULLEY - INSTALLATION, AUTOMATIC	7-11
BELT TENSIONER AND PULLEY - REMOVAL, AUTOMATIC	7-11
BELT WEATHERSTRIP - INSTALLATION, FRONT DOOR INNER	23-92
BELT WEATHERSTRIP - INSTALLATION, FRONT DOOR OUTER	23-92
BELT WEATHERSTRIP - INSTALLATION, REAR DOOR INNER	23-93
BELT WEATHERSTRIP - REMOVAL, FRONT DOOR INNER	23-92
BELT WEATHERSTRIP - REMOVAL, FRONT DOOR OUTER	23-92
BELT WEATHERSTRIP - REMOVAL, REAR DOOR INNER	23-93
BELTS - DESCRIPTION, DRIVE	7-6
BELTS - DIAGNOSIS AND TESTING, FASTEN SEAT	8B-2
BELTS, DIAGNOSIS AND TESTING - ACCESSORY DRIVE	7-7
BEZEL - INSTALLATION, ACCESSORY SWITCH	23-46
BEZEL - INSTALLATION, CHILD SEAT TETHER ANCHOR	23-73
BEZEL - INSTALLATION, CLUSTER	23-48
BEZEL - INSTALLATION, INSTRUMENT PANEL CENTER	23-56
BEZEL - INSTALLATION, REAR SEAT PIVOT	23-72
BEZEL - INSTALLATION, SIDE VIEW MIRROR TRIM	23-25
BEZEL - REMOVAL, ACCESSORY SWITCH	23-46
BEZEL - REMOVAL, CHILD SEAT TETHER ANCHOR	23-73
BEZEL - REMOVAL, CLUSTER	23-46
BEZEL - REMOVAL, INSTRUMENT PANEL CENTER	23-56
BEZEL - REMOVAL, REAR SEAT PIVOT	23-72
BEZEL - REMOVAL, SIDE VIEW MIRROR TRIM	23-25
BEZEL CONTROL KNOBS - INSTALLATION, INSTRUMENT PANEL CENTER	23-57
BEZEL CONTROL KNOBS - REMOVAL, INSTRUMENT PANEL CENTER	23-56
BIN - INSTALLATION, UNDER SEAT STORAGE	23-72
BIN - REMOVAL, UNDER SEAT STORAGE	23-72
BLADE - INSTALLATION, REAR WIPER	8R-15
BLADE - REMOVAL, REAR WIPER	8R-15
BLADE ELEMENTS - INSTALLATION, FRONT WIPER	8R-8
BLADE ELEMENTS - REMOVAL, FRONT WIPER	8R-8
BLADES - CLEANING, FRONT WIPER	8R-8
BLADES - INSTALLATION, FRONT WIPER	8R-8
BLADES - REMOVAL, FRONT WIPER	8R-7
BLEEDING - STANDARD PROCEDURE, ANTILOCK BRAKE SYSTEM	5-77
BLEEDING - STANDARD PROCEDURE, BASE BRAKE	5-6
BLEEDING - STANDARD PROCEDURE, MASTER CYLINDER	5-38
BLEEDING CLUTCH HYDRAULIC CIRCUIT - STANDARD PROCEDURE	6-6
BLOCK - CLEANING, ENGINE	9-109,9-188,9-43
BLOCK - DESCRIPTION, BLOWER MOTOR RESISTOR	24-21,24-76
BLOCK - DESCRIPTION, ENGINE	9-108,9-187, 9-41
BLOCK - DESCRIPTION, FUSE	8W-97-4
BLOCK - INSPECTION, ENGINE	9-109,9-188,9-43
BLOCK - INSTALLATION, BLOWER MOTOR RESISTOR	24-21,24-77
BLOCK - INSTALLATION, FUSE	8W-97-4
BLOCK - OPERATION, FUSE	8W-97-4
BLOCK - REMOVAL, BLOWER MOTOR RESISTOR	24-21,24-76
BLOCK - REMOVAL, FUSE	8W-97-4
BLOCK HEATER - DESCRIPTION, ENGINE	7-19, 7-48
BLOCK HEATER - INSTALLATION, ENGINE	7-19
BLOCK HEATER - OPERATION, ENGINE	7-19, 7-48
BLOCK HEATER - REMOVAL, ENGINE	7-19
BLOCK HEATER, DIAGNOSIS AND TESTING - ENGINE	7-49
BLOCK HEATER TESTING - DIAGNOSIS AND TESTING, ENGINE	7-19
BLOWER MOTOR - DIAGNOSIS AND TESTING	24-28,24-83
BLOWER MOTOR - INSTALLATION	24-30,24-85
BLOWER MOTOR - OPERATION	24-28,24-83
BLOWER MOTOR - REMOVAL	24-28,24-83
BLOWER MOTOR RESISTOR BLOCK - DESCRIPTION	24-21,24-76
BLOWER MOTOR RESISTOR BLOCK - INSTALLATION	24-21,24-77
BLOWER MOTOR RESISTOR BLOCK - REMOVAL	24-21,24-76
BLOWER MOTOR WHEEL - DESCRIPTION	24-28,24-83
BODY - ASSEMBLY, VALVE	21-295
BODY & CABLE - DESCRIPTION, ANTENNA	8A-3
BODY & CABLE - INSTALLATION, ANTENNA	8A-5
BODY & CABLE - OPERATION, ANTENNA	8A-3
BODY & CABLE - REMOVAL, ANTENNA	8A-5
BODY - DESCRIPTION, THROTTLE	14-44
BODY - DESCRIPTION, VALVE	21-287
BODY - DISASSEMBLY, VALVE	21-291
BODY - INSTALLATION, VALVE	21-300
BODY - OPERATION, THROTTLE	14-44
BODY - OPERATION, VALVE	21-287
BODY - REMOVAL, VALVE	21-288
BODY AND CABLE - DIAGNOSIS AND TESTING, ANTENNA	8A-4
BODY CODE PLATE - DESCRIPTION	Intro.-1
BODY GAP AND FLUSH MEASUREMENTS - SPECIFICATIONS	23-95
BODY LUBRICATION, SPECIFICATIONS	23-10
BODY OPENING DIMENSION - SPECIFICATIONS	23-97
BODY PANEL REPAIR - STANDARD PROCEDURE, PLASTIC	23-3
BODY SEALING LOCATIONS - SPECIFICATIONS	23-99
BODY SIDE MOLDINGS - INSTALLATION	23-41
BODY SIDE MOLDINGS - REMOVAL	23-41
BODY, SPECIAL TOOLS	23-12
BODY VENT - INSTALLATION	23-61
BODY VENT - REMOVAL	23-61
BOOSTER - DESCRIPTION, POWER BRAKE	5-45
BOOSTER - DIAGNOSIS AND TESTING, POWER BRAKE	5-46
BOOSTER - OPERATION, POWER BRAKE	5-46
BOOT - INNER - INSTALLATION, CV	3-14

Description	Group-Page
BOOT - INNER - REMOVAL, CV	3-13
BOOT - INSTALLATION, GEAR SHIFT	21-127, 21-59
BOOT - INSTALLATION, LOWER BALL JOINT SEAL	2-12
BOOT - OUTER - INSTALLATION, CV	3-19
BOOT - OUTER - REMOVAL, CV	3-18
BOOT - REMOVAL, GEAR SHIFT	21-126,21-59
BOOT - REMOVAL, LOWER BALL JOINT SEAL	2-12
BORE AND PISTON - FITTING - STANDARD PROCEDURE, CYLINDER	9-48
BORE FITTING - STANDARD PROCEDURE, PISTON TO CYLINDER	9-117, 9-195
BORE HONING - STANDARD PROCEDURE, CYLINDER	9-108,9-187,9-41
BOX - INSTALLATION, GLOVE	23-48
BOX - REMOVAL, GLOVE	23-48
BOX LATCH - INSTALLATION, GLOVE	23-49
BOX LATCH - REMOVAL, GLOVE	23-49
BOX LOCK CYLINDER - INSTALLATION, GLOVE	23-50
BOX LOCK CYLINDER - REMOVAL, GLOVE	23-49
B-PILLAR TRIM - INSTALLATION	23-60
B-PILLAR TRIM - REMOVAL	23-60
BRACKET - INSTALLATION, BATTERY TRAY SUPPORT	8F-22
BRACKET - INSTALLATION, RIGHT ENGINE MOUNT	9-55
BRACKET - REMOVAL, BATTERY TRAY SUPPORT	8F-22
BRACKET - REMOVAL, RIGHT ENGINE MOUNT	9-54
BRACKETS AND ISOLATORS - INSTALLATION, SUPPORT	11-11
BRACKETS AND ISOLATORS - REMOVAL, SUPPORT	11-11
BRAKE - DESCRIPTION, CONTROLLER ANTILOCK	8E-1
BRAKE - DESCRIPTION, PARKING	5-61
BRAKE - INSPECTION, WHEEL CYLINDER - DRUM	5-61
BRAKE - INSTALLATION, CABLE - PARKING	5-67
BRAKE - INSTALLATION, CONTROLLER ANTILOCK	8E-3
BRAKE - INSTALLATION, LEVER - PARKING	5-69
BRAKE - INSTALLATION, SHOES - PARKING	5-70
BRAKE - INSTALLATION, WHEEL CYLINDER - DRUM	5-61
BRAKE - OPERATION, CONTROLLER ANTILOCK	8E-1
BRAKE - OPERATION, PARKING	5-62
BRAKE - REMOVAL, CABLE - PARKING	5-63
BRAKE - REMOVAL, CONTROLLER ANTILOCK	8E-2
BRAKE - REMOVAL, LEVER - PARKING	5-68
BRAKE - REMOVAL, SHOES - PARKING	5-69
BRAKE - REMOVAL, WHEEL CYLINDER - DRUM	5-60
BRAKE ACTUATION SYSTEM, SPECIFICATIONS	5-8
BRAKE AUTOMATIC ADJUSTER - DIAGNOSIS AND TESTING, DRUM	5-14
BRAKE AUTOMATIC ADJUSTER LOCKOUT - STANDARD PROCEDURE, PARKING	5-62
BRAKE BLEEDING - STANDARD PROCEDURE, BASE	5-6
BRAKE BOOSTER - DESCRIPTION, POWER	5-45
BRAKE BOOSTER - DIAGNOSIS AND TESTING, POWER	5-46
BRAKE BOOSTER - OPERATION, POWER	5-46
BRAKE CALIPER - CLEANING, DISC	5-25,5-30
BRAKE CALIPER - FRONT - ASSEMBLY, DISC	5-25
BRAKE CALIPER - FRONT - DISASSEMBLY, DISC	5-24
BRAKE CALIPER - FRONT - INSTALLATION, DISC	5-26
BRAKE CALIPER - FRONT - REMOVAL, DISC	5-24
BRAKE CALIPER - INSPECTION, DISC	5-25,5-30
BRAKE CALIPER - REAR - REMOVAL, DISC	5-27
BRAKE CALIPER ADAPTER - FRONT - INSTALLATION, DISC	5-34
BRAKE CALIPER ADAPTER - FRONT - REMOVAL, DISC	5-33
BRAKE CALIPER (GUIDE PIN BUSHINGS) - ASSEMBLY, DISC	5-30
BRAKE CALIPER (GUIDE PIN BUSHINGS) - DISASSEMBLY, DISC	5-28
BRAKE CALIPER GUIDE PINS - INSTALLATION, DISC	5-35
BRAKE CALIPER GUIDE PINS - REMOVAL, DISC	5-34
BRAKE CALIPER (PISTON AND SEAL) - ASSEMBLY, DISC	5-32
BRAKE CALIPER (PISTON AND SEAL) - DISASSEMBLY, DISC	5-28
BRAKE DRUM - DIAGNOSIS AND TESTING	5-35
BRAKE DRUM MACHINING - STANDARD PROCEDURE	5-35
BRAKE FASTENER TORQUE, SPECIFICATIONS	5-8
BRAKE FLUID CONTAMINATION - DIAGNOSIS AND TESTING	5-37
BRAKE FLUID LEVEL CHECKING - STANDARD PROCEDURE	5-37
BRAKE FLUID LEVEL SWITCH - INSTALLATION	5-10
BRAKE FLUID LEVEL SWITCH - REMOVAL	5-10
BRAKE FLUID, SPECIFICATIONS	5-37
BRAKE INDICATOR - DIAGNOSIS AND TESTING, BRAKE/PARK	8B-2
BRAKE LAMP SWITCH - DESCRIPTION	8L-3
BRAKE LAMP SWITCH - DIAGNOSIS AND TESTING	8L-4
BRAKE LAMP SWITCH - INSTALLATION	8L-5
BRAKE LAMP SWITCH - OPERATION	8L-4
BRAKE LAMP SWITCH - REMOVAL	8L-4
BRAKE PADS/SHOES - FRONT - INSTALLATION	5-16
BRAKE PADS/SHOES - FRONT - REMOVAL	5-15
BRAKE PADS/SHOES - REAR DISC - INSTALLATION	5-19
BRAKE PADS/SHOES - REAR DISC - REMOVAL	5-17
BRAKE PADS/SHOES - REAR DRUM - INSTALLATION	5-22
BRAKE PADS/SHOES - REAR DRUM - REMOVAL	5-19
BRAKE PROPORTIONING - DESCRIPTION, ELECTRONIC VARIABLE	5-74
BRAKE PROPORTIONING - OPERATION, ELECTRONIC VARIABLE	5-75
BRAKE ROTOR - DIAGNOSIS AND TESTING	5-52
BRAKE ROTOR - INSTALLATION, FRONT	5-57
BRAKE ROTOR - INSTALLATION, REAR	5-57
BRAKE ROTOR - REMOVAL, FRONT	5-56
BRAKE ROTOR - REMOVAL, REAR	5-56
BRAKE ROTOR LIMITS/SPECIFICATIONS, SPECIFICATIONS	5-57
BRAKE ROTOR MACHINING - STANDARD PROCEDURE	5-55
BRAKE SHOES - ADJUSTMENT, DRUM	5-23
BRAKE SHOES - CLEANING, DISC	5-16,5-18
BRAKE SHOES - CLEANING, DRUM	5-21
BRAKE SHOES - INSPECTION, DISC	5-16,5-19
BRAKE SHOES - INSPECTION, DRUM	5-21
BRAKE SYSTEM - DESCRIPTION, ANTILOCK	5-73
BRAKE SYSTEM - DESCRIPTION, BASE	5-2
BRAKE SYSTEM - OPERATION, ANTILOCK	5-74
BRAKE SYSTEM - OPERATION, BASE	5-3
BRAKE SYSTEM BLEEDING - STANDARD PROCEDURE, ANTILOCK	5-77
BRAKE SYSTEM DIAGNOSIS CHARTS - DIAGNOSIS AND TESTING, BASE	5-3
BRAKE SYSTEM, SPECIAL TOOLS - BASE	5-9
BRAKE TUBES AND HOSES - DESCRIPTION	5-15
BRAKE TUBES AND HOSES - INSPECTION	5-15
BRAKE TUBES AND HOSES - OPERATION	5-15
BRAKE/PARK BRAKE INDICATOR - DIAGNOSIS AND TESTING	8B-2
BRAKES - BASE - WARNING	5-3
BRAKES - INSTALLATION, SUPPORT PLATE - DRUM	5-59
BRAKES - REMOVAL, SUPPORT PLATE - DRUM	5-58
BRAKES (FRONT) - DESCRIPTION, DISC	5-10
BRAKES (REAR) - DESCRIPTION, DISC	5-13
BRAKES (REAR) - DESCRIPTION, DRUM	5-13
BRAKE/TRANSMISSION SHIFT INTERLOCK SYSTEM, ADJUSTMENTS	21-270
BUCKLE - INSTALLATION, FRONT SEAT BELT	8O-11
BUCKLE - REMOVAL, FRONT SEAT BELT	8O-11
BUCKLE - REMOVAL, REAR SEAT BELT	8O-16
BUMPER - INSTALLATION, JOUNCE	2-41
BUMPER - REMOVAL, JOUNCE	2-41
BUMPER FASCIA - INSTALLATION, FRONT	13-2
BUMPER FASCIA - INSTALLATION, REAR	13-3
BUMPER FASCIA - REMOVAL, FRONT	13-2
BUMPER FASCIA - REMOVAL, REAR	13-3
BUMPER REINFORCEMENT - INSTALLATION, FRONT	13-1
BUMPER REINFORCEMENT - INSTALLATION, REAR	13-3
BUMPER REINFORCEMENT - REMOVAL, FRONT	13-1
BUMPER REINFORCEMENT - REMOVAL, REAR	13-3
BUS COMMUNICATION RECEIVE - PCM INPUT - OPERATION, DATA	8E-5
BUS, OPERATION - PROGRAMMABLE COMMUNICATIONS INTERFACE (PCI)	14-24
BUSHING - INSTALLATION, AXLE PIVOT	2-38
BUSHING - INSTALLATION, SHIFT CROSSOVER SHAFT	21-145
BUSHING - INSTALLATION, SHIFT SELECTOR SHAFT	21-147
BUSHING - REMOVAL, AXLE PIVOT	2-37
BUSHING - REMOVAL, SHIFT CROSSOVER SHAFT	21-145
BUSHING - REMOVAL, SHIFT SELECTOR SHAFT	21-146
BUSHINGS - INSTALLATION, SHIFT RAIL	21-146
BUSHINGS - REMOVAL, SHIFT RAIL	21-146
CABIN HEATER - DESCRIPTION	24-111,24-55
CABIN HEATER - DIAGNOSIS AND TESTING, DIESEL ENGINE	24-111,24-56
CABIN HEATER - OPERATION	24-111,24-55
CABLE - ADJUSTMENT, GEARSHIFT CROSSOVER	21-133,21-66
CABLE - DESCRIPTION	8P-4
CABLE - DESCRIPTION, ANTENNA BODY	8A-3
CABLE - DESCRIPTION, SPARK PLUG	8I-14
CABLE - DIAGNOSIS AND TESTING, ANTENNA BODY	8A-4
CABLE - INSTALLATION, ANTENNA BODY	8A-5
CABLE - INSTALLATION, GEAR SHIFT	21-130, 21-236,21-63
CABLE - INSTALLATION, HOOD LATCH RELEASE	23-45
CABLE - INSTALLATION, MODE DOOR	24-22, 24-78
CABLE - INSTALLATION, SHIFT INTERLOCK	21-267
CABLE - INSTALLATION, THROTTLE CONTROL	14-48
CABLE - OPERATION	8P-4
CABLE - OPERATION, ANTENNA BODY	8A-3
CABLE - PARKING BRAKE - INSTALLATION	5-67
CABLE - PARKING BRAKE - REMOVAL	5-63
CABLE - REMOVAL, ANTENNA BODY	8A-5
CABLE - REMOVAL, GEAR SHIFT	21-127,21-234, 21-59
CABLE - REMOVAL, HOOD LATCH RELEASE	23-44
CABLE - REMOVAL, MODE DOOR	24-22,24-77
CABLE - REMOVAL, SHIFT INTERLOCK	21-265
CABLE - REMOVAL, THROTTLE CONTROL	14-48
CABLE - SATELLITE RADIO - DESCRIPTION, ANTENNA	8A-7
CABLE - SATELLITE RADIO - INSTALLATION, ANTENNA	8A-7

Description	Group-Page
CABLE - SATELLITE RADIO - REMOVAL, ANTENNA	8A-7
CABLE, ADJUSTMENTS - GEARSHIFT	21-237
CABLE RESISTANCE, SPECIFICATIONS - SPARK PLUG	8I-3
CABLES - DESCRIPTION, BATTERY	8F-18
CABLES - DIAGNOSIS AND TESTING, BATTERY	8F-18
CABLES - INSTALLATION, BATTERY	8F-20
CABLES - INSTALLATION, TEMPERATURE CONTROL	24-24,24-80
CABLES - OPERATION, BATTERY	8F-18
CABLES - REMOVAL, BATTERY	8F-19
CABLES - REMOVAL, TEMPERATURE CONTROL	24-24,24-79
CALIBRATION - STANDARD PROCEDURE, COMPASS	8M-2
CALIPER - CLEANING, DISC BRAKE	5-25,5-30
CALIPER - FRONT - ASSEMBLY, DISC BRAKE	5-25
CALIPER - FRONT - DISASSEMBLY, DISC BRAKE	5-24
CALIPER - FRONT - INSTALLATION, DISC BRAKE	5-26
CALIPER - FRONT - REMOVAL, DISC BRAKE	5-24
CALIPER - INSPECTION, DISC BRAKE	5-25,5-30
CALIPER - REAR - REMOVAL, DISC BRAKE	5-27
CALIPER ADAPTER - FRONT - INSTALLATION, DISC BRAKE	5-34
CALIPER ADAPTER - FRONT - REMOVAL, DISC BRAKE	5-33
CALIPER (GUIDE PIN BUSHINGS) - ASSEMBLY, DISC BRAKE	5-30
CALIPER (GUIDE PIN BUSHINGS) - DISASSEMBLY, DISC BRAKE	5-28
CALIPER GUIDE PINS - INSTALLATION, DISC BRAKE	5-35
CALIPER GUIDE PINS - REMOVAL, DISC BRAKE	5-34
CALIPER (PISTON AND SEAL) - ASSEMBLY, DISC BRAKE	5-32
CALIPER (PISTON AND SEAL) - DISASSEMBLY, DISC BRAKE	5-28
CAMSHAFT - INSPECTION	9-36
CAMSHAFT - INSTALLATION	9-36
CAMSHAFT - REMOVAL	9-35
CAMSHAFT END PLAY - STANDARD PROCEDURE, MEASURING	9-101,9-180
CAMSHAFT OIL SEAL(S) - INSTALLATION	9-101, 9-179
CAMSHAFT OIL SEAL(S) - REMOVAL	9-100, 9-179
CAMSHAFT POSITION SENSOR - DESCRIPTION	8I-4
CAMSHAFT POSITION SENSOR - OPERATION	8I-4
CAMSHAFT SPROCKET - INSTALLATION	9-69
CAMSHAFT SPROCKET - REMOVAL	9-68
CAMSHAFT SPROCKETS - INSTALLATION	9-146
CAMSHAFT SPROCKET(S) - INSTALLATION	9-229
CAMSHAFT SPROCKET(S) - REMOVAL	9-145, 9-227
CAMSHAFT(S) - CLEANING	9-102,9-181
CAMSHAFT(S) - DESCRIPTION	9-101,9-180
CAMSHAFT(S) - INSPECTION	9-102,9-181
CAMSHAFT(S) - INSTALLATION	9-102,9-181
CAMSHAFT(S) - OPERATION	9-101,9-180
CAMSHAFT(S) - REMOVAL	9-101,9-180
CANISTER - DESCRIPTION, VAPOR	25-19
CANISTER - INSTALLATION, VAPOR	25-21
CANISTER - OPERATION, VAPOR	25-19
CANISTER - REMOVAL, VAPOR	25-20
CAP - DESCRIPTION, COOLING SYSTEM PRESSURE	7-46
CAP - DESCRIPTION, FUEL FILLER	25-14
CAP - DESCRIPTION, RADIATOR PRESSURE	7-21
CAP - INSTALLATION, INSTRUMENT PANEL END	23-57
CAP - OPERATION, COOLING SYSTEM PRESSURE	7-47
CAP - OPERATION, FUEL FILLER	25-14
CAP - OPERATION, RADIATOR PRESSURE	7-21
CAP - REMOVAL, INSTRUMENT PANEL END	23-57
CAP TESTING - DIAGNOSIS AND TESTING, COOLING SYSTEM PRESSURE	7-21,7-47
CAPACITIES - SPECIFICATIONS, FLUID	0-5
CARE, CLEANING - WHEEL AND WHEEL TRIM	22-13
CARGO LAMP - INSTALLATION, REAR	8L-32
CARGO LAMP - REMOVAL, REAR	8L-32
CARGO LAMP UNIT - INSTALLATION, REAR	8L-32
CARGO LAMP UNIT - REMOVAL, REAR	8L-32
CARPET - INSTALLATION, FLOOR	23-61
CARPET - REMOVAL, FLOOR	23-61
CARRIER ASSEMBLY - DESCRIPTION, BALANCE SHAFTS	9-232
CARRIER ASSEMBLY - INSTALLATION, BALANCE SHAFTS	9-233
CARRIER ASSEMBLY - OPERATION, BALANCE SHAFTS	9-232
CARRIER ASSEMBLY - REMOVAL, BALANCE SHAFTS	9-232
CARTRIDGE - INSTALLATION, OIL FILTER	9-59
CARTRIDGE - REMOVAL, OIL FILTER	9-59
CARTRIDGE HOUSING - DESCRIPTION, OIL FILTER	9-60
CARTRIDGE HOUSING - INSTALLATION, OIL FILTER	9-60
CARTRIDGE HOUSING - REMOVAL, OIL FILTER	9-60
CATALYTIC CONVERTER - DESCRIPTION	11-9
CATALYTIC CONVERTER - INSPECTION	11-10
CATALYTIC CONVERTER - INSTALLATION	11-10
CATALYTIC CONVERTER - OPERATION	11-9
CATALYTIC CONVERTER - REMOVAL	11-9
CENTER - DESCRIPTION, POWER DISTRIBUTION	8W-97-5
CENTER - INSTALLATION, POWER DISTRIBUTION	8W-97-6
CENTER - OPERATION, POWER DISTRIBUTION	8W-97-5
CENTER - REMOVAL, POWER DISTRIBUTION	8W-97-6
CENTER AIR OUTLET DUCT - INSTALLATION	24-27,24-83
CENTER AIR OUTLET DUCT - REMOVAL	24-27, 24-83
CENTER BEZEL - INSTALLATION, INSTRUMENT PANEL	23-56
CENTER BEZEL - REMOVAL, INSTRUMENT PANEL	23-56
CENTER BEZEL CONTROL KNOBS - INSTALLATION, INSTRUMENT PANEL	23-57
CENTER BEZEL CONTROL KNOBS - REMOVAL, INSTRUMENT PANEL	23-56
CENTER CONSOLE FLOOD LAMP - INSTALLATION	8L-29
CENTER CONSOLE FLOOD LAMP - REMOVAL	8L-29
CENTER CONSOLE FLOOD LAMP HOUSING - INSTALLATION	8L-29
CENTER CONSOLE FLOOD LAMP HOUSING - REMOVAL	8L-29
CENTER HIGH MOUNTED STOP LAMP - INSTALLATION	8L-5
CENTER HIGH MOUNTED STOP LAMP - REMOVAL	8L-5
CENTER HIGH MOUNTED STOP LAMP UNIT - INSTALLATION	8L-6
CENTER HIGH MOUNTED STOP LAMP UNIT - REMOVAL	8L-5
CENTER SEAT BELT & RETRACTOR - INSTALLATION, REAR	8O-16
CENTER SEAT BELT & RETRACTOR - REMOVAL, REAR	8O-16
CENTERING - STANDARD PROCEDURE, CLOCK SPRING	8O-6
CERTIFICATION LABEL - DESCRIPTION, VEHICLE SAFETY	Intro.-10
CHAIN AND GUIDES - INSTALLATION, TIMING	9-70
CHAIN AND GUIDES - REMOVAL, TIMING	9-67
CHAIN COVER - INSTALLATION, TIMING	9-66
CHAIN COVER - REMOVAL, TIMING	9-65
CHANGE - STANDARD PROCEDURE, ENGINE OIL AND FILTER	9-129,9-207
CHARGE AIR COOLER - INSTALLATION	11-21
CHARGE AIR COOLER - REMOVAL	11-20
CHARGE AIR COOLER HOSES - INSTALLATION	11-21
CHARGE AIR COOLER HOSES - REMOVAL	11-19
CHARGE LEVEL TEST - STANDARD PROCEDURE, SYSTEM	24-5,24-61
CHARGING - STANDARD PROCEDURE, CONVENTIONAL BATTERY	8F-10
CHARGING - STANDARD PROCEDURE, SPIRAL PLATE BATTERY	8F-8
CHARGING A/C SYSTEM - STANDARD PROCEDURE	24-6,24-63
CHARGING SYSTEM - DESCRIPTION	8F-23
CHARGING SYSTEM - OPERATION	8F-23
CHARTS - DIAGNOSIS AND TESTING, BASE BRAKE SYSTEM DIAGNOSIS	5-3
CHARTS - DIAGNOSIS AND TESTING, STEERING DIAGNOSIS	19-3
CHATTER COMPLAINTS - DIAGNOSIS AND TESTING, CLUTCH	6-6
CHILD SEAT TETHER ANCHOR BEZEL - INSTALLATION	23-73
CHILD SEAT TETHER ANCHOR BEZEL - REMOVAL	23-73
CHIME CONDITIONS - DIAGNOSIS AND TESTING	8B-2
CHIME/BUZZER - DESCRIPTION	8B-1
CHIME/BUZZER - OPERATION	8B-1
CHIRP TOGGLE - STANDARD PROCEDURE, HORN	8N-6
CHMSL ACCESS PANEL - INSTALLATION, LIFTGATE	23-13
CHMSL ACCESS PANEL - REMOVAL, LIFTGATE	23-13
CIGAR LIGHTER/POWER OUTLET - DESCRIPTION	8W-97-1
CIGAR LIGHTER/POWER OUTLET - INSTALLATION	8W-97-3
CIGAR LIGHTER/POWER OUTLET - OPERATION	8W-97-2
CIGAR LIGHTER/POWER OUTLET - REMOVAL	8W-97-3
CIRCUIT - STANDARD PROCEDURE, BLEEDING CLUTCH HYDRAULIC	6-6
CIRCUIT FUNCTIONS - DESCRIPTION	8W-01-6
CIRCUIT INFORMATION - DESCRIPTION	8W-01-5
CIRCUIT RESISTANCE TEST - DIAGNOSIS AND TESTING, FEED	8F-38
CIRCUIT TEST - DIAGNOSIS AND TESTING, CONTROL	8F-36
CIRCUIT TEST - DIAGNOSIS AND TESTING, FEED	8F-39
CIRCUITS - OPERATION, NON-MONITORED	25-5
CIRCUITS AND VALVES - OPERATION, HYDRAULIC	5-84
CLAMP - STANDARD PROCEDURE, HOSES	14-6
CLAMPS - DESCRIPTION, FUEL LINES/HOSES	14-5
CLAMPS - DESCRIPTION, HOSE	7-18,7-52
CLAMPS - OPERATION, HOSE	7-52
CLASH-INTO-REVERSE COMPLAINTS - DIAGNOSIS AND TESTING	6-6
CLEARANCE, SPECIFICATIONS - EXHAUST SYSTEM	11-4
CLEARANCE USING PLASTIGAGE - STANDARD PROCEDURE, MEASURING BEARING	9-13,9-160,9-84
CLOCK SPRING - DESCRIPTION	8O-5
CLOCK SPRING - INSTALLATION	8O-7
CLOCK SPRING - OPERATION	8O-6
CLOCK SPRING - REMOVAL	8O-6
CLOCK SPRING CENTERING - STANDARD PROCEDURE	8O-6
CLOSURE PANEL - INSTALLATION, RADIATOR	23-40
CLOSURE PANEL - REMOVAL, RADIATOR	23-39
CLUSTER - DESCRIPTION, INSTRUMENT	8J-1
CLUSTER - OPERATION, INSTRUMENT	8J-2
CLUSTER BEZEL - INSTALLATION	23-48
CLUSTER BEZEL - REMOVAL	23-46
CLUSTER ILLUMINATION LAMPS - INSTALLATION	8L-32
CLUSTER ILLUMINATION LAMPS - REMOVAL	8L-31

Description	Group-Page
CLUSTER MASK/LENS - INSTALLATION	8J-5
CLUSTER MASK/LENS - REMOVAL	8J-5
CLUSTER WARNING/INDICATOR LAMPS - DIAGNOSIS AND TESTING, INSTRUMENT	8J-3
CLUTCH - DESCRIPTION	6-2
CLUTCH - DESCRIPTION, MODULAR	6-30
CLUTCH - INSPECTION, MODULAR	6-31
CLUTCH - INSTALLATION, MODULAR	6-32
CLUTCH - OPERATION	6-2
CLUTCH - OPERATION, MODULAR	6-30
CLUTCH - REMOVAL, MODULAR	6-31
CLUTCH AIR PRESSURE TESTS - DIAGNOSIS AND TESTING	21-157
CLUTCH ASSEMBLY - ASSEMBLY, INPUT	21-248
CLUTCH ASSEMBLY - DISASSEMBLY, INPUT	21-239
CLUTCH BELLHOUSING - ASSEMBLY	21-51
CLUTCH BELLHOUSING - DISASSEMBLY	21-49
CLUTCH CHATTER COMPLAINTS - DIAGNOSIS AND TESTING	6-6
CLUTCH COIL - INSTALLATION, A/C COMPRESSOR	24-17,24-73
CLUTCH COIL - REMOVAL, A/C COMPRESSOR	24-16,24-72
CLUTCH CYCLING SWITCH - DIAGNOSIS AND TESTING, A/C LOW PRESSURE	24-19, 24-75
CLUTCH HYDRAULIC CIRCUIT - STANDARD PROCEDURE, BLEEDING	6-6
CLUTCH INTERLOCK/UPSTOP SWITCH - DESCRIPTION	6-12
CLUTCH INTERLOCK/UPSTOP SWITCH - DIAGNOSIS AND TESTING	6-13
CLUTCH INTERLOCK/UPSTOP SWITCH - OPERATION	6-13
CLUTCH RELAY - DESCRIPTION, A/C COMPRESSOR	24-11,24-67
CLUTCH RELAY - INSTALLATION, A/C COMPRESSOR	24-12,24-68
CLUTCH RELAY - OPERATION, A/C COMPRESSOR	24-12,24-68
CLUTCH RELAY - REMOVAL, A/C COMPRESSOR	24-12,24-68
CLUTCH RELEASE BEARING - DESCRIPTION	6-18
CLUTCH RELEASE BEARING - INSTALLATION	6-19
CLUTCH RELEASE BEARING - OPERATION	6-19
CLUTCH RELEASE BEARING - REMOVAL	6-19
CLUTCH SYSTEM DIAGNOSIS - DIAGNOSIS AND TESTING	6-3
CLUTCHES - DESCRIPTION, DRIVING	21-223
CLUTCHES - DESCRIPTION, HOLDING	21-238
CLUTCHES - OPERATION, DRIVING	21-224
CLUTCHES - OPERATION, HOLDING	21-238
CLUTCH/HYDRAULICS/PEDALS, SPECIFICATIONS	6-9
CODE - DESCRIPTION, PAINT	23-66
CODE PLATE - DESCRIPTION, BODY	Intro.-1
CODES - OPERATION, CHECKING FOR DIAGNOSTIC	8P-3
CODES - SPECIFICATIONS, COLOR	23-66
CODES - STANDARD PROCEDURE, OBTAINING DIAGNOSTIC TROUBLE	8E-10
COIL - DESCRIPTION, IGNITION	8I-6
COIL - INSTALLATION, A/C COMPRESSOR CLUTCH	24-17,24-73
COIL - OPERATION, IGNITION	8I-6
COIL - REMOVAL, A/C COMPRESSOR CLUTCH	24-16,24-72
COILS, SPECIFICATIONS - IGNITION	8I-3
COLLAR - INSTALLATION, STRUCTURAL	9-121, 9-200
COLLAR - REMOVAL, STRUCTURAL	9-121,9-200
COLOR CODES - SPECIFICATIONS	23-66
COLUMN - DESCRIPTION	19-10
COLUMN - DIAGNOSIS AND TESTING, STEERING	19-11
COLUMN - OPERATION	19-10
COLUMN FASTENER TORQUE - SPECIFICATIONS, STEERING	19-18
COLUMN LOWER COUPLING - DIAGNOSIS AND TESTING, STEERING	19-22
COLUMN OPENING COVER - INSTALLATION, STEERING	23-59
COLUMN OPENING COVER - REMOVAL, STEERING	23-59
COMBINATION FLASHER - DESCRIPTION	8L-6
COMBINATION FLASHER - INSTALLATION	8L-6
COMBINATION FLASHER - OPERATION	8L-6
COMBINATION FLASHER - REMOVAL	8L-6
COMBUSTION PRESSURE LEAKAGE TEST - DIAGNOSIS AND TESTING, CYLINDER	9-156,9-80,9-9
COMMON PROBLEM CAUSES - DIAGNOSIS AND TESTING	21-96
COMMUNICATION RECEIVE - PCM INPUT - OPERATION, DATA BUS	8E-5
COMMUNICATIONS INTERFACE (PCI) BUS, OPERATION - PROGRAMMABLE	14-24
COMPASS CALIBRATION - STANDARD PROCEDURE	8M-2
COMPASS DEMAGNETIZING - STANDARD PROCEDURE	8M-4
COMPASS VARIATION ADJUSTMENT - STANDARD PROCEDURE	8M-3
COMPLAINTS - DIAGNOSIS AND TESTING, CLASH-INTO-REVERSE	6-6
COMPLAINTS - DIAGNOSIS AND TESTING, CLUTCH CHATTER	6-6
COMPRESSION PRESSURE TEST - DIAGNOSIS AND TESTING, CYLINDER	9-156,9-8,9-80
COMPRESSOR CLUTCH COIL - INSTALLATION, A/C	24-17,24-73
COMPRESSOR CLUTCH COIL - REMOVAL, A/C	24-16,24-72
COMPRESSOR CLUTCH RELAY - DESCRIPTION, A/C	24-11,24-67
COMPRESSOR CLUTCH RELAY - INSTALLATION, A/C	24-12,24-68
COMPRESSOR CLUTCH RELAY - OPERATION, A/C	24-12,24-68
COMPRESSOR CLUTCH RELAY - REMOVAL, A/C	24-12,24-68
COMPRESSOR FRONT SHAFT SEAL - DESCRIPTION	24-33,24-88
COMPRESSOR NOISE - DIAGNOSIS AND TESTING	24-33,24-88
CONCENTRATION TESTING - DIAGNOSIS AND TESTING, COOLANT	7-17,7-42
CONDENSATION DRAIN TUBE - DESCRIPTION	24-42,24-97
CONDENSATION DRAIN TUBE - INSTALLATION	24-43,24-97
CONDENSATION DRAIN TUBE - REMOVAL	24-42,24-97
CONDENSER - DESCRIPTION, A/C	24-36,24-90
CONDENSER - INSTALLATION, A/C	24-37,24-91
CONDENSER - OPERATION, A/C	24-36,24-91
CONDENSER - REMOVAL, A/C	24-36,24-91
CONDITION CHECK, STANDARD PROCEDURE - FLUID LEVEL	21-231
CONDITIONING - DESCRIPTION, HEATER AND AIR	24-25,24-81
CONDITIONS - DIAGNOSIS AND TESTING, CHIME	8B-2
CONDITIONS - DIAGNOSIS AND TESTING, FRONT WIPER	8R-3
CONFIGURING A NEW MODULE - STANDARD PROCEDURE, RKE/VTSS	8Q-3
CONNECTING ROD - DESCRIPTION, PISTON	9-117,9-195,9-48
CONNECTING ROD - INSTALLATION, PISTON	9-118,9-197
CONNECTING ROD - REMOVAL, PISTON	9-118,9-195
CONNECTING ROD AND BEARING - FITTING - STANDARD PROCEDURE	9-48
CONNECTING ROD, FITTING	9-119,9-198
CONNECTOR - DESCRIPTION, DATA LINK	8E-3
CONNECTOR - INSTALLATION	8W-01-11
CONNECTOR - OPERATION, DATA LINK	8E-3
CONNECTOR - REMOVAL	8W-01-11
CONNECTOR - REMOVAL, INJECTOR	14-31
CONNECTOR, GROUND AND SPLICE INFORMATION - DESCRIPTION	8W-01-7
CONNECTOR/GROUND/SPLICE LOCATION - DESCRIPTION	8W-91-1
CONSOLE - DESCRIPTION, OVERHEAD	8M-1
CONSOLE - OPERATION, OVERHEAD	8M-1
CONSOLE FLOOD LAMP - INSTALLATION, CENTER	8L-29
CONSOLE FLOOD LAMP - REMOVAL, CENTER	8L-29
CONSOLE FLOOD LAMP HOUSING - INSTALLATION, CENTER	8L-29
CONSOLE FLOOD LAMP HOUSING - REMOVAL, CENTER	8L-29
CONSOLE, SPECIAL TOOLS - OVERHEAD	8M-5
CONTAINER - DESCRIPTION, COOLANT RECOVERY	7-18,7-45
CONTAINER - INSTALLATION, COOLANT RECOVERY	7-18,7-45
CONTAINER - OPERATION, COOLANT RECOVERY	7-18,7-45
CONTAINER - REMOVAL, COOLANT RECOVERY	7-18,7-45
CONTAMINATION - DIAGNOSIS AND TESTING, BRAKE FLUID	5-37
CONTINUITY - STANDARD PROCEDURE, TESTING	8W-01-9
CONTROL - DESCRIPTION, A/C HEATER	24-13, 24-69
CONTROL - DESCRIPTION, SPEED	8P-1
CONTROL - INSTALLATION, A/C HEATER	24-15, 24-71
CONTROL - REMOVAL, A/C HEATER	24-15,24-71
CONTROL (4 SPEED EATX ONLY) - OPERATION, INTERACTIVE SPEED	8P-2
CONTROL ARM - DESCRIPTION, LOWER	2-13
CONTROL ARM - DIAGNOSIS AND TESTING, LOWER	2-13
CONTROL ARM - INSTALLATION, LOWER	2-17
CONTROL ARM - OPERATION, LOWER	2-13
CONTROL ARM - REMOVAL, LOWER	2-13
CONTROL ARM (BALL JOINT) - ASSEMBLY, LOWER	2-16
CONTROL ARM (BALL JOINT) - DISASSEMBLY, LOWER	2-15
CONTROL ARM (REAR ISOLATOR BUSHING) - ASSEMBLY, LOWER	2-17
CONTROL ARM (REAR ISOLATOR BUSHING) - DISASSEMBLY, LOWER	2-15
CONTROL ASSEMBLY PANEL - INSTALLATION, LIFTGATE INNER	23-15
CONTROL ASSEMBLY PANEL - REMOVAL, LIFTGATE INNER	23-15
CONTROL CABLE - INSTALLATION, THROTTLE	14-48
CONTROL CABLE - REMOVAL, THROTTLE	14-48
CONTROL CABLES - INSTALLATION, TEMPERATURE	24-24,24-80
CONTROL CABLES - REMOVAL, TEMPERATURE	24-24,24-79
CONTROL CIRCUIT TEST - DIAGNOSIS AND TESTING	8F-36
CONTROL INFORMATION LABEL - DESCRIPTION, VEHICLE EMISSION	25-5
CONTROL KNOBS - INSTALLATION, INSTRUMENT PANEL CENTER BEZEL	23-57
CONTROL KNOBS - REMOVAL, INSTRUMENT PANEL CENTER BEZEL	23-56
CONTROL MODULE - DESCRIPTION, SIDE IMPACT AIRBAG	8O-19
CONTROL MODULE - DESCRIPTION, TRANSMISSION	8E-17
CONTROL MODULE - INSTALLATION, ELECTRONIC	23-84
CONTROL MODULE - INSTALLATION, SIDE IMPACT AIRBAG	8O-20
CONTROL MODULE - INSTALLATION, TRANSMISSION	8E-20
CONTROL MODULE - OPERATION, SIDE IMPACT AIRBAG	8O-19
CONTROL MODULE - OPERATION, TRANSMISSION	8E-17
CONTROL MODULE - REMOVAL, ELECTRONIC	23-84
CONTROL MODULE - REMOVAL, SIDE IMPACT AIRBAG	8O-19
CONTROL MODULE - REMOVAL, TRANSMISSION	8E-20
CONTROL MOTOR - DESCRIPTION, IDLE AIR	14-37
CONTROL MOTOR - INSTALLATION, IDLE AIR	14-37

Description	Group-Page
CONTROL MOTOR - OPERATION, IDLE AIR	14-37
CONTROL MOTOR - REMOVAL, IDLE AIR	14-37
CONTROL RELAY - DESCRIPTION, TRANSMISSION	21-285
CONTROL RELAY - OPERATION, TRANSMISSION	21-285
CONTROL SWITCH - INSTALLATION, SUNROOF	23-85
CONTROL SWITCH - INSTALLATION, TRACTION	5-83
CONTROL SWITCH - REMOVAL, SUNROOF	23-85
CONTROL SWITCH - REMOVAL, TRACTION	5-83
CONTROL SYSTEM - DESCRIPTION, TRACTION	5-74
CONTROL SYSTEM - DIAGNOSIS AND TESTING, VACUUM	24-13,24-69
CONTROL SYSTEM - OPERATION, EVAPORATION	25-11
CONTROL SYSTEM - OPERATION, TRACTION	5-75
CONTROL UNIT - DESCRIPTION, ICU - INTEGRATED	5-90
CONTROL UNIT - INSTALLATION, ICU - INTEGRATED	5-92
CONTROL UNIT - OPERATION, ICU - INTEGRATED	5-90
CONTROL UNIT - REMOVAL, ICU - INTEGRATED	5-90
CONTROL UNIT (HCU) - DESCRIPTION, HYDRAULIC	5-83
CONTROLLER - DESCRIPTION, OCCUPANT RESTRAINT	8O-12
CONTROLLER - INSTALLATION, OCCUPANT RESTRAINT	8O-13
CONTROLLER - OPERATION, OCCUPANT RESTRAINT	8O-12
CONTROLLER - REMOVAL, OCCUPANT RESTRAINT	8O-13
CONTROLLER ANTILOCK BRAKE - DESCRIPTION	8E-1
CONTROLLER ANTILOCK BRAKE - INSTALLATION	8E-3
CONTROLLER ANTILOCK BRAKE - OPERATION	8E-1
CONTROLLER ANTILOCK BRAKE - REMOVAL	8E-2
CONVENTIONAL BATTERY CHARGING - STANDARD PROCEDURE	8F-10
CONVERTER - DESCRIPTION, CATALYTIC	11-9
CONVERTER - DESCRIPTION, TORQUE	21-279
CONVERTER - INSPECTION, CATALYTIC	11-10
CONVERTER - INSTALLATION, CATALYTIC	11-10
CONVERTER - INSTALLATION, TORQUE	21-284
CONVERTER - OPERATION, CATALYTIC	11-9
CONVERTER - OPERATION, TORQUE	21-283
CONVERTER - REMOVAL, CATALYTIC	11-9
CONVERTER - REMOVAL, TORQUE	21-284
CONVERTER HOUSING FLUID LEAKAGE - DIAGNOSIS AND TESTING, TORQUE	21-158
COOLANT - DESCRIPTION	7-17,7-42
COOLANT - DESCRIPTION, ENGINE	0-3
COOLANT - STANDARD PROCEDURE, ADDING ADDITIONAL	7-17,7-43
COOLANT CONCENTRATION TESTING - DIAGNOSIS AND TESTING	7-17,7-42
COOLANT LEVEL CHECK - STANDARD PROCEDURE, ROUTINE	7-17,7-43
COOLANT LEVEL SERVICING - STANDARD PROCEDURE	7-43
COOLANT RECOVERY CONTAINER - DESCRIPTION	7-18,7-45
COOLANT RECOVERY CONTAINER - INSTALLATION	7-18,7-45
COOLANT RECOVERY CONTAINER - OPERATION	7-18,7-45
COOLANT RECOVERY CONTAINER - REMOVAL	7-18,7-45
COOLANT SERVICE - STANDARD PROCEDURE	7-17
COOLANT TEMP SENSOR - DESCRIPTION, ENGINE	7-20
COOLANT TEMP SENSOR - INSTALLATION, ENGINE	7-20
COOLANT TEMP SENSOR - OPERATION, ENGINE	7-20
COOLANT TEMP SENSOR - REMOVAL, ENGINE	7-20
COOLANT TEMPERATURE SENSOR - DESCRIPTION, ENGINE	7-49
COOLANT TEMPERATURE SENSOR - INSTALLATION, ENGINE	7-50
COOLANT TEMPERATURE SENSOR - OPERATION, ENGINE	7-49
COOLANT TEMPERATURE SENSOR - REMOVAL, ENGINE	7-50
COOLANT THERMOSTAT - DESCRIPTION, ENGINE	7-50
COOLANT THERMOSTAT - DIAGNOSIS AND TESTING, ENGINE	7-51
COOLANT THERMOSTAT - INSTALLATION, ENGINE	7-51
COOLANT THERMOSTAT - OPERATION, ENGINE	7-51
COOLANT THERMOSTAT - REMOVAL, ENGINE	7-51
COOLANT THERMOSTAT AND HOUSING - INSTALLATION, ENGINE	7-20
COOLANT THERMOSTAT AND HOUSING - REMOVAL, ENGINE	7-20
COOLER - CLEANING, AUTOMATIC TRANSMISSION OIL	7-62
COOLER - DESCRIPTION, AUTOMATIC TRANSMISSION OIL	7-61
COOLER - DESCRIPTION, FLUID	19-47
COOLER - INSPECTION, AUTOMATIC TRANSMISSION OIL	7-63
COOLER - INSTALLATION, AUTOMATIC TRANSMISSION OIL	7-63
COOLER - INSTALLATION, CHARGE AIR	11-21
COOLER & LINES - 2.4L TURBO - DESCRIPTION, OIL	9-215
COOLER & LINES - 2.4L TURBO - INSTALLATION, OIL	9-215
COOLER & LINES - 2.4L TURBO - REMOVAL, OIL	9-215
COOLER - REMOVAL, AUTOMATIC TRANSMISSION OIL	7-61
COOLER - REMOVAL, CHARGE AIR	11-20
COOLER HOSES - DESCRIPTION, TRANSMISSION	7-61
COOLER HOSES - INSTALLATION, CHARGE AIR	11-21
COOLER HOSES - REMOVAL, CHARGE AIR	11-19
COOLING SYSTEM - STANDARD PROCEDURE, DRAINING	7-15,7-40
COOLING SYSTEM - STANDARD PROCEDURE, FILLING	7-15,7-41
COOLING SYSTEM AERATION - DIAGNOSIS AND TESTING	7-14
COOLING SYSTEM AERATION, DIAGNOSIS AND TESTING	7-40
COOLING SYSTEM DEAERATION - DIAGNOSIS AND TESTING	7-14,7-40
COOLING SYSTEM, DIAGNOSIS AND TESTING	7-33
COOLING SYSTEM FLOW CHECK - DIAGNOSIS AND TESTING	7-14,7-40
COOLING SYSTEM LEAK TESTING - DIAGNOSIS AND TESTING	7-14,7-39
COOLING SYSTEM PRESSURE CAP - DESCRIPTION	7-46
COOLING SYSTEM PRESSURE CAP - OPERATION	7-47
COOLING SYSTEM PRESSURE CAP TESTING - DIAGNOSIS AND TESTING	7-21,7-47
COOLING SYSTEM PRESSURE RELIEF TESTING - DIAGNOSIS AND TESTING	7-22,7-47
COOLING SYSTEM REQUIREMENTS, DESCRIPTION - ENGINE	24-3,24-59
COOLING SYSTEM, SPECIAL TOOLS	7-2
COOLING SYSTEM WARNINGS, WARNING	7-1
CORE - DESCRIPTION, HEATER	24-43
CORE - DESCRIPTION, SERVICE PORT VALVE	24-110,24-54
CORE - EXPORT - DESCRIPTION, HEATER	24-97
CORE - EXPORT - INSTALLATION, HEATER	24-99
CORE - EXPORT - OPERATION, HEATER	24-98
CORE - EXPORT - REMOVAL, HEATER	24-98
CORE - INSTALLATION, HEATER	24-44
CORE - OPERATION, HEATER	24-43
CORE - REMOVAL, HEATER	24-43
CORE AND OIL GALLERY PLUGS - STANDARD PROCEDURE, ENGINE	9-13,9-160, 9-84
CORES - INSTALLATION, SERVICE PORT VALVE	24-111,24-55
CORES - REMOVAL, SERVICE PORT VALVE	24-111,24-55
COUPLING - DIAGNOSIS AND TESTING, STEERING COLUMN LOWER	19-22
COUPLING - LOWER - DESCRIPTION, STEERING	19-21
COUPLING - LOWER - INSTALLATION, STEERING	19-25
COUPLING - LOWER - OPERATION, STEERING	19-21
COUPLING - LOWER - REMOVAL, STEERING	19-22
COURTESY/READING LAMP - INSTALLATION	8L-30
COURTESY/READING LAMP - REMOVAL	8L-30
COVER - CLEANING, CYLINDER HEAD	9-31
COVER - INSPECTION, CYLINDER HEAD	9-31
COVER - INSTALLATION, CYLINDER HEAD	9-103,9-182,9-31
COVER - INSTALLATION, DRIVER AIRBAG	8O-10
COVER - INSTALLATION, FRONT SEAT BACK	23-69
COVER - INSTALLATION, FRONT SEAT CUSHION	23-70
COVER - INSTALLATION, INSTRUMENT PANEL TOP	23-58
COVER - INSTALLATION, PASSENGER AIRBAG	8O-15
COVER - INSTALLATION, REAR SEAT BACK	23-71
COVER - INSTALLATION, REAR SEAT BACK CUSHION	23-72
COVER - INSTALLATION, STEERING COLUMN OPENING	23-59
COVER - INSTALLATION, TIMING CHAIN	9-66
COVER - INSTALLATION, WHEEL	22-14
COVER - REMOVAL, CYLINDER HEAD	9-103, 9-182,9-31
COVER - REMOVAL, DRIVER AIRBAG	8O-9
COVER - REMOVAL, FRONT SEAT BACK	23-69
COVER - REMOVAL, FRONT SEAT CUSHION	23-70
COVER - REMOVAL, INSTRUMENT PANEL TOP	23-57
COVER - REMOVAL, PASSENGER AIRBAG	8O-15
COVER - REMOVAL, REAR SEAT BACK	23-71
COVER - REMOVAL, REAR SEAT BACK CUSHION	23-71
COVER - REMOVAL, STEERING COLUMN OPENING	23-59
COVER - REMOVAL, TIMING CHAIN	9-65
COVER - REMOVAL, WHEEL	22-14
COVER(S) - INSTALLATION, TIMING BELT	9-143,9-225
COVER(S) - REMOVAL, TIMING BELT	9-142, 9-225
COWL GRILLE SCREEN - INSTALLATION	23-35
COWL GRILLE SCREEN - REMOVAL	23-35
COWL TRIM PANEL - INSTALLATION, SIDE	23-62
COWL TRIM PANEL - REMOVAL, SIDE	23-62
C-PILLAR TRIM - INSTALLATION, UPPER	23-63
C-PILLAR TRIM - REMOVAL, UPPER	23-63
CRANK - INSTALLATION, WATTS BELL	2-49
CRANK - REMOVAL, WATTS BELL	2-49
CRANKSHAFT - DESCRIPTION	9-44
CRANKSHAFT - INSPECTION	9-112,9-190,9-45
CRANKSHAFT - INSTALLATION	9-112,9-190,9-45
CRANKSHAFT - REMOVAL	9-110,9-189,9-44
CRANKSHAFT END PLAY - STANDARD PROCEDURE	9-110,9-44
CRANKSHAFT END PLAY - STANDARD PROCEDURE, MEASURING	9-189
CRANKSHAFT MAIN BEARINGS - DESCRIPTION	9-44
CRANKSHAFT OIL SEAL - FRONT - INSTALLATION	9-114,9-192,9-47
CRANKSHAFT OIL SEAL - FRONT - REMOVAL	9-114,9-192,9-47

Description	Group-Page
CRANKSHAFT OIL SEAL - REAR - INSTALLATION	9-115,9-193,9-47
CRANKSHAFT OIL SEAL - REAR - REMOVAL	9-115,9-193,9-47
CRANKSHAFT POSITION SENSOR - DESCRIPTION	14-28
CRANKSHAFT POSITION SENSOR - OPERATION	14-28
CRANKSHAFT SPROCKET - INSTALLATION	9-146,9-228,9-69
CRANKSHAFT SPROCKET - REMOVAL	9-145, 9-228,9-69
CROSSBAR - INSTALLATION, LUGGAGE RACK	23-39
CROSSBAR - REMOVAL, LUGGAGE RACK	23-39
CROSSMEMBER - INSTALLATION, FRONT	13-11
CROSSMEMBER - REMOVAL, FRONT	13-9
CROSSOVER CABLE - ADJUSTMENT, GEARSHIFT	21-133,21-66
CROSSOVER LEVER - INSTALLATION, SHIFT	21-145
CROSSOVER LEVER - REMOVAL, SHIFT	21-144
CROSSOVER SHAFT - INSTALLATION, SHIFT	21-145
CROSSOVER SHAFT - REMOVAL, SHIFT	21-145
CROSSOVER SHAFT BUSHING - INSTALLATION, SHIFT	21-145
CROSSOVER SHAFT BUSHING - REMOVAL, SHIFT	21-145
CUPS - INSTALLATION, DIFFERENTIAL BEARING	21-126
CUPS - REMOVAL, DIFFERENTIAL BEARING	21-125
CURB HEIGHT MEASUREMENT - STANDARD PROCEDURE	2-57
CUSHION / COVER - INSTALLATION, REAR SEAT BACK	23-72
CUSHION / COVER - REMOVAL, REAR SEAT BACK	23-71
CUSHION - INSTALLATION, FRONT SEAT	23-70
CUSHION - INSTALLATION, REAR SEAT	23-71
CUSHION - REMOVAL, FRONT SEAT	23-70
CUSHION - REMOVAL, REAR SEAT	23-71
CUSHION COVER - INSTALLATION, FRONT SEAT	23-70
CUSHION COVER - REMOVAL, FRONT SEAT	23-70
CUSHIONS - INSTALLATION, STABILIZER BAR	2-48
CUSHIONS - REMOVAL, STABILIZER BAR	2-47
CV BOOT - INNER - INSTALLATION	3-14
CV BOOT - INNER - REMOVAL	3-13
CV BOOT - OUTER - INSTALLATION	3-19
CV BOOT - OUTER - REMOVAL	3-18
CYCLING SWITCH - DIAGNOSIS AND TESTING, A/C LOW PRESSURE CLUTCH	24-19,24-75
CYLINDER - DESCRIPTION, MASTER	5-38
CYLINDER - DESCRIPTION, SLAVE	6-32
CYLINDER - DRUM BRAKE - INSPECTION, WHEEL	5-61
CYLINDER - DRUM BRAKE - INSTALLATION, WHEEL	5-61
CYLINDER - DRUM BRAKE - REMOVAL, WHEEL	5-60
CYLINDER - INSTALLATION, FRONT DOOR LOCK	23-25
CYLINDER - INSTALLATION, GLOVE BOX LOCK	23-50
CYLINDER - INSTALLATION, KEY/LOCK	19-20
CYLINDER - INSTALLATION, LIFTGATE LOCK	23-17
CYLINDER - LHD - DESCRIPTION, MASTER	6-22
CYLINDER - LHD - INSTALLATION, MASTER	6-25
CYLINDER - LHD - OPERATION, MASTER	6-22
CYLINDER - LHD - REMOVAL, MASTER	6-22
CYLINDER - OPERATION, MASTER	5-38
CYLINDER - REMOVAL, FRONT DOOR LOCK	23-25
CYLINDER - REMOVAL, GLOVE BOX LOCK	23-49
CYLINDER - REMOVAL, KEY/LOCK	19-20
CYLINDER - REMOVAL, LIFTGATE LOCK	23-17
CYLINDER - RHD - DESCRIPTION, MASTER	6-26
CYLINDER - RHD - INSTALLATION, MASTER	6-29
CYLINDER - RHD - OPERATION, MASTER	6-26
CYLINDER - RHD - REMOVAL, MASTER	6-26
CYLINDER BLEEDING - STANDARD PROCEDURE, MASTER	5-38
CYLINDER BORE AND PISTON - FITTING - STANDARD PROCEDURE	9-48
CYLINDER BORE FITTING - STANDARD PROCEDURE, PISTON TO	9-117,9-195
CYLINDER BORE HONING - STANDARD PROCEDURE	9-108,9-187,9-41
CYLINDER COMBUSTION PRESSURE LEAKAGE TEST - DIAGNOSIS AND TESTING	9-156,9-80,9-9
CYLINDER COMPRESSION PRESSURE TEST - DIAGNOSIS AND TESTING	9-156,9-8, 9-80
CYLINDER HEAD - CLEANING	9-177,9-27,9-98
CYLINDER HEAD - DESCRIPTION	9-174,9-96
CYLINDER HEAD - INSPECTION	9-177,9-27,9-98
CYLINDER HEAD - INSTALLATION	9-177,9-28, 9-99
CYLINDER HEAD - REMOVAL	9-175,9-26,9-97
CYLINDER HEAD COVER - CLEANING	9-31
CYLINDER HEAD COVER - INSPECTION	9-31
CYLINDER HEAD COVER - INSTALLATION	9-103,9-182,9-31
CYLINDER HEAD COVER - REMOVAL	9-103, 9-182,9-31
CYLINDER HEAD GASKET - DIAGNOSIS AND TESTING	9-174,9-9,9-96
CYLINDER HEAD OFF - INSTALLATION	9-107, 9-187
CYLINDER HEAD OFF - REMOVAL	9-107,9-186
CYLINDER HEAD ON - INSTALLATION	9-107, 9-186
CYLINDER HEAD ON - REMOVAL	9-107,9-186
CYLINDER LOCK SWITCH - INSTALLATION, DOOR	8Q-4
CYLINDER LOCK SWITCH - INSTALLATION, LIFTGATE	8Q-6
CYLINDER LOCK SWITCH - REMOVAL, DOOR	8Q-4
CYLINDER LOCK SWITCH - REMOVAL, LIFTGATE	8Q-6
DAM - INSTALLATION, FRONT DOOR WATER	23-27
DAM - INSTALLATION, REAR DOOR WATER	23-33
DAM - REMOVAL, FRONT DOOR WATER	23-26
DAM - REMOVAL, REAR DOOR WATER	23-33
DAMAGED OR WORN THREADS - STANDARD PROCEDURE, REPAIR OF	9-11, 9-158,9-82
DAMPER - INSTALLATION, VIBRATION	9-122, 9-201,9-52
DAMPER - REMOVAL, VIBRATION	9-122,9-201, 9-52
DATA BUS COMMUNICATION RECEIVE - PCM INPUT - OPERATION	8E-5
DATA LINK CONNECTOR - DESCRIPTION	8E-3
DATA LINK CONNECTOR - OPERATION	8E-3
DAYTIME RUNNING LAMP MODULE - DESCRIPTION	8L-7
DAYTIME RUNNING LAMP MODULE - OPERATION	8L-7
DEAERATION - DIAGNOSIS AND TESTING, COOLING SYSTEM	7-14,7-40
DECALS - INSTALLATION, WOOD GRAIN/FLAME	23-41
DECALS - REMOVAL, WOOD GRAIN/ FLAME	23-41
DEFINITION - DESCRIPTION, TRIP	25-5
DEFLECTOR - INSTALLATION, WIND	23-85
DEFLECTOR - REMOVAL, WIND	23-85
DEFOGGER - DESCRIPTION, HEATED WINDOW	8G-10
DEFOGGER - OPERATION, HEATED WINDOW	8G-10
DEFOGGER GRID LINES, STANDARD PROCEDURE - REAR WINDOW	8G-13
DEFOGGER SWITCH - DESCRIPTION	8G-11
DEFOGGER SWITCH - OPERATION	8G-11
DEFOGGER SWITCH, DIAGNOSIS AND TESTING - REAR WINDOW	8G-11
DEFOGGER SYSTEM, DIAGNOSIS AND TESTING - REAR WINDOW	8G-10
DELIVERY - DESCRIPTION, FUEL	14-2
DELIVERY - OPERATION, FUEL	14-2
DELIVERY SYSTEM - DIAGNOSIS AND TESTING, FUEL	14-2
DEMAGNETIZING - STANDARD PROCEDURE, COMPASS	8M-4
DEPLOYMENT - STANDARD PROCEDURE, SERVICE AFTER AN AIRBAG	8O-5
DETECTION ASSY - INSTALLATION, NATURAL VAC LEAK	25-15
DETECTION ASSY - REMOVAL, NATURAL VAC LEAK	25-14
DETENT PLUG - DESCRIPTION	21-53
DETENT PLUG - INSTALLATION	21-55
DETENT PLUG - REMOVAL	21-55
DEVICES - STANDARD PROCEDURE, ELECTROSTATIC DISCHARGE (ESD) SENSITIVE	8W-01-8
DIAGNOSTIC TROUBLE CODES - STANDARD PROCEDURE, OBTAINING	8E-10
DIAGRAMS - 41TE TRANSAXLE HYDRAULIC SCHEMATICS, SCHEMATICS	21-203
DIAGRAMS - DESCRIPTION, HOW TO USE WIRING	8W-01-1
DIAGRAMS - SPECIAL TOOLS, SCHEMATICS	21-217
DIAGRAMS - SPECIFICATIONS, SCHEMATICS	21-215
DIESEL - DESCRIPTION, 2.2L	19-38
DIESEL - INSTALLATION, 2.2	8F-32
DIESEL - INSTALLATION, 2.2L	8F-44
DIESEL - INSTALLATION, 2.2L	19-46,19-53, 19-59,19-61,19-62,19-65
DIESEL - INSTALLATION, 2.2L TURBO	21-34
DIESEL - REMOVAL, 2.2	8F-31,8F-41
DIESEL - REMOVAL, 2.2L	19-44,19-50,19-58, 19-60,19-62,19-63
DIESEL - REMOVAL, 2.2L TURBO	21-13
DIESEL AND TURBO MODELS - INSTALLATION	6-34
DIESEL AND TURBO MODELS - INSTALLATION	3-10
DIESEL AND TURBO MODELS - INSTALLATION, EXCEPT	3-8
DIESEL AND TURBO MODELS - REMOVAL	6-34
DIESEL AND TURBO MODELS - REMOVAL	3-6
DIESEL AND TURBO MODELS - REMOVAL, EXCEPT	3-4
DIESEL ENGINE - INSTALLATION	8F-16,8F-20
DIESEL ENGINE - REMOVAL	8F-14,8F-20
DIESEL ENGINE CABIN HEATER - DIAGNOSIS AND TESTING	24-111,24-56
DIFFERENTIAL - ASSEMBLY	21-121,21-57
DIFFERENTIAL - DESCRIPTION	21-56
DIFFERENTIAL - DISASSEMBLY	21-119,21-56
DIFFERENTIAL - INSTALLATION	21-57
DIFFERENTIAL - OPERATION	21-56
DIFFERENTIAL - REMOVAL	21-56
DIFFERENTIAL BEARING CUPS - INSTALLATION	21-126
DIFFERENTIAL BEARING CUPS - REMOVAL	21-125
DIFFERENTIAL BEARING PRELOAD ADJUSTMENT / SHIM SELECTION, ADJUSTMENTS	21-124
DIFFERENTIAL BEARING PRELOAD MEASUREMENT AND ADJUSTMENT, ADJUSTMENTS	21-229
DIMENSION - SPECIFICATIONS, BODY OPENING	23-97
DIMENSIONS - SPECIFICATIONS, FRAME	13-4
DIODE - INSTALLATION	8W-01-14
DIODE - REMOVAL	8W-01-14
DISC - INSTALLATION, BRAKE PADS/SHOES - REAR	5-19
DISC - REMOVAL, BRAKE PADS/SHOES - REAR	5-17
DISC BRAKE CALIPER - CLEANING	5-25,5-30
DISC BRAKE CALIPER - FRONT - ASSEMBLY	5-25
DISC BRAKE CALIPER - FRONT - DISASSEMBLY	5-24
DISC BRAKE CALIPER - FRONT - INSTALLATION	5-26

Description	Group-Page
DISC BRAKE CALIPER - FRONT - REMOVAL	5-24
DISC BRAKE CALIPER - INSPECTION	5-25,5-30
DISC BRAKE CALIPER - REAR - REMOVAL	5-27
DISC BRAKE CALIPER ADAPTER - FRONT - INSTALLATION	5-34
DISC BRAKE CALIPER ADAPTER - FRONT - REMOVAL	5-33
DISC BRAKE CALIPER (GUIDE PIN BUSHINGS) - ASSEMBLY	5-30
DISC BRAKE CALIPER (GUIDE PIN BUSHINGS) - DISASSEMBLY	5-28
DISC BRAKE CALIPER GUIDE PINS - INSTALLATION	5-35
DISC BRAKE CALIPER GUIDE PINS - REMOVAL	5-34
DISC BRAKE CALIPER (PISTON AND SEAL) - ASSEMBLY	5-32
DISC BRAKE CALIPER (PISTON AND SEAL) - DISASSEMBLY	5-28
DISC BRAKE SHOES - CLEANING	5-16,5-18
DISC BRAKE SHOES - INSPECTION	5-16,5-19
DISC BRAKES (FRONT) - DESCRIPTION	5-10
DISC BRAKES (REAR) - DESCRIPTION	5-13
DISCHARGE (ESD) SENSITIVE DEVICES - STANDARD PROCEDURE, ELECTROSTATIC	8W-01-8
DISCHARGE LINE - DESCRIPTION	24-37,24-92
DISCHARGE LINE - INSTALLATION, A/C	24-37, 24-93
DISCHARGE LINE - REMOVAL, A/C	24-37,24-92
DISPLAY TEST MODE, OPERATION - DRB III® STATE	25-10
DISTRIBUTION - DESCRIPTION, AIR FLOW	24-26,24-82
DISTRIBUTION - DESCRIPTION, POWER	8W-97-1
DISTRIBUTION - OPERATION, AIR FLOW	24-27, 24-82
DISTRIBUTION - OPERATION, POWER	8W-97-1
DISTRIBUTION CENTER - DESCRIPTION, POWER	8W-97-5
DISTRIBUTION CENTER - INSTALLATION, POWER	8W-97-6
DISTRIBUTION CENTER - OPERATION, POWER	8W-97-5
DISTRIBUTION CENTER - REMOVAL, POWER	8W-97-6
DOES NOT FILL - DIAGNOSIS AND TESTING, VEHICLE	25-17
DOHC - DESCRIPTION, ENGINE - 2.0/2.4L	7-32
DOHC - DESCRIPTION, ENGINE 2.0L	9-75
DOHC - DESCRIPTION, ENGINE 2.4L	9-151
DOHC - OPERATION, ENGINE - 2.0/2.4L	7-32
DOHC ENGINE, SPECIAL TOOLS - 2.0L	9-92
DOHC ENGINE, SPECIFICATIONS - 2.0L	9-89
DOME LAMP - INSTALLATION	8L-30
DOME LAMP - REMOVAL	8L-30
DOME LAMP UNIT - INSTALLATION	8L-30
DOME LAMP UNIT - REMOVAL	8L-30
DOME LAMP UNIT WITH INTRUSION SENSOR - EXPORT - INSTALLATION	8L-31
DOME LAMP UNIT WITH INTRUSION SENSOR - EXPORT - REMOVAL	8L-30
DOME LAMP WITH INTRUSION SENSOR - EXPORT - INSTALLATION	8L-30
DOME LAMP WITH INTRUSION SENSOR - EXPORT - REMOVAL	8L-30
DOOR - INSTALLATION, FRONT	23-20
DOOR - INSTALLATION, FUEL FILL	23-37
DOOR - INSTALLATION, REAR	23-30
DOOR - REMOVAL, FRONT	23-20
DOOR - REMOVAL, FUEL FILL	23-37
DOOR - REMOVAL, REAR	23-30
DOOR ACTUATOR - DESCRIPTION, RECIRCULATION	24-23,24-78
DOOR ACTUATOR - INSTALLATION, RECIRCULATION	24-24,24-79
DOOR ACTUATOR - REMOVAL, RECIRCULATION	24-23,24-79
DOOR APPLIQUE - INSTALLATION, FRONT	23-19
DOOR APPLIQUE - INSTALLATION, REAR	23-29
DOOR APPLIQUE - REMOVAL, FRONT	23-19
DOOR APPLIQUE - REMOVAL, REAR	23-28
DOOR CABLE - INSTALLATION, MODE	24-22, 24-78
DOOR CABLE - REMOVAL, MODE	24-22,24-77
DOOR CHECK STRAP - INSTALLATION, FRONT	23-20
DOOR CHECK STRAP - INSTALLATION, REAR	23-29
DOOR CHECK STRAP - REMOVAL, FRONT	23-20
DOOR CHECK STRAP - REMOVAL, REAR	23-29
DOOR CYLINDER LOCK SWITCH - INSTALLATION	8Q-4
DOOR CYLINDER LOCK SWITCH - REMOVAL	8Q-4
DOOR GLASS - INSTALLATION, FRONT	23-21
DOOR GLASS - INSTALLATION, REAR	23-30
DOOR GLASS - REMOVAL, FRONT	23-21
DOOR GLASS - REMOVAL, REAR	23-30
DOOR GLASS RUN WEATHERSTRIP - INSTALLATION, FRONT	23-90
DOOR GLASS RUN WEATHERSTRIP - INSTALLATION, REAR	23-93
DOOR GLASS RUN WEATHERSTRIP - REMOVAL, FRONT	23-90
DOOR GLASS RUN WEATHERSTRIP - REMOVAL, REAR	23-92
DOOR HINGE - INSTALLATION, FRONT	23-22
DOOR HINGE - INSTALLATION, REAR	23-31
DOOR HINGE - REMOVAL, FRONT	23-22
DOOR HINGE - REMOVAL, REAR	23-31
DOOR INNER BELT WEATHERSTRIP - INSTALLATION, FRONT	23-92
DOOR INNER BELT WEATHERSTRIP - INSTALLATION, REAR	23-93
DOOR INNER BELT WEATHERSTRIP - REMOVAL, FRONT	23-92
DOOR INNER BELT WEATHERSTRIP - REMOVAL, REAR	23-93
DOOR INSIDE HANDLE ACTUATOR - INSTALLATION, FRONT	23-23
DOOR INSIDE HANDLE ACTUATOR - REMOVAL, FRONT	23-22
DOOR LATCH - INSTALLATION, FRONT	23-23
DOOR LATCH - INSTALLATION, REAR	23-32
DOOR LATCH - REMOVAL, FRONT	23-23
DOOR LATCH - REMOVAL, REAR	23-32
DOOR LATCH ADJUSTMENT, ADJUSTMENTS - FRONT	23-24
DOOR LATCH ADJUSTMENT, ADJUSTMENTS - REAR	23-32
DOOR LATCH STRIKER - INSTALLATION, FRONT	23-24
DOOR LATCH STRIKER - INSTALLATION, REAR	23-32
DOOR LATCH STRIKER - REMOVAL, FRONT	23-24
DOOR LATCH STRIKER - REMOVAL, REAR	23-32
DOOR LOCK CYLINDER - INSTALLATION, FRONT	23-25
DOOR LOCK CYLINDER - REMOVAL, FRONT	23-25
DOOR LOCK MOTOR - DESCRIPTION	8N-4
DOOR LOCK MOTOR - DIAGNOSIS AND TESTING	8N-4
DOOR LOCK MOTOR - OPERATION	8N-4
DOOR LOCK SWITCH - DIAGNOSIS AND TESTING	8N-3
DOOR LOCK SWITCH - INSTALLATION	8N-4
DOOR LOCK SWITCH - REMOVAL	8N-4
DOOR LOCKS - STANDARD PROCEDURE, ROLLING	8N-3
DOOR OPENING WEATHERSTRIP - INSTALLATION, FRONT AND REAR	23-90
DOOR OPENING WEATHERSTRIP - REMOVAL, FRONT AND REAR	23-90
DOOR OUTER BELT WEATHERSTRIP - INSTALLATION, FRONT	23-92
DOOR OUTER BELT WEATHERSTRIP - REMOVAL, FRONT	23-92
DOOR OUTSIDE HANDLE - INSTALLATION, FRONT	23-21
DOOR OUTSIDE HANDLE - INSTALLATION, REAR	23-31
DOOR OUTSIDE HANDLE - REMOVAL, FRONT	23-21
DOOR OUTSIDE HANDLE - REMOVAL, REAR	23-31
DOOR SILL TRIM - INSTALLATION	23-63
DOOR SILL TRIM - REMOVAL	23-63
DOOR TRIM PANEL - INSTALLATION, FRONT	23-25
DOOR TRIM PANEL - INSTALLATION, REAR	23-33
DOOR TRIM PANEL - REMOVAL, FRONT	23-25
DOOR TRIM PANEL - REMOVAL, REAR	23-32
DOOR UPPER SECONDARY WEATHERSTRIP - INSTALLATION, FRONT AND REAR	23-90
DOOR UPPER SECONDARY WEATHERSTRIP - REMOVAL, FRONT AND REAR	23-90
DOOR VERTICAL GUIDE BAR - INSTALLATION, FRONT	23-25
DOOR VERTICAL GUIDE BAR - REMOVAL, FRONT	23-25
DOOR WATER DAM - INSTALLATION, FRONT	23-27
DOOR WATER DAM - INSTALLATION, REAR	23-33
DOOR WATER DAM - REMOVAL, FRONT	23-26
DOOR WATER DAM - REMOVAL, REAR	23-33
DOOR WINDOW REGULATOR - INSTALLATION, FRONT	23-27
DOOR WINDOW REGULATOR - INSTALLATION, REAR	23-34
DOOR WINDOW REGULATOR - REMOVAL, FRONT	23-27
DOOR WINDOW REGULATOR - REMOVAL, REAR	23-34
DOUBLE ACTIVATION UNLOCK - STANDARD PROCEDURE	8N-3
DOWNSTREAM - INSTALLATION, 1/2	14-43
DOWNSTREAM - REMOVAL, 1/2	14-42
D-PILLAR TRIM - INSTALLATION, UPPER	23-63
D-PILLAR TRIM - REMOVAL, UPPER	23-63
DRAIN AND FILL - STANDARD PROCEDURE, FLUID	21-126,21-58
DRAIN TUBE - DESCRIPTION, CONDENSATION	24-42,24-97
DRAIN TUBE - INSTALLATION	23-88
DRAIN TUBE - INSTALLATION, CONDENSATION	24-43,24-97
DRAIN TUBE - REMOVAL	23-88
DRAIN TUBE - REMOVAL, CONDENSATION	24-42,24-97
DRAINCOCK - INSTALLATION, RADIATOR	7-23, 7-58
DRAINCOCK - REMOVAL, RADIATOR	7-22,7-57
DRAINING COOLING SYSTEM - STANDARD PROCEDURE	7-15,7-40
DRAINING FUEL TANK - STANDARD PROCEDURE	14-2
DRAW TEST - STANDARD PROCEDURE, IGNITION-OFF	8F-13
DRB III® STATE DISPLAY TEST MODE, OPERATION	25-10
DRIVE - 1.6L SOHC - DESCRIPTION, ACCESSORY	7-3
DRIVE - ASSEMBLY, FINAL	21-228
DRIVE - DESCRIPTION, FINAL	21-224
DRIVE - DISASSEMBLY, FINAL	21-225
DRIVE - OPERATION, FINAL	21-224
DRIVE BELT - CLEANING, ACCESSORY	7-4
DRIVE BELT - INSPECTION, ACCESSORY	7-4
DRIVE BELT - INSTALLATION, ACCESSORY	7-4
DRIVE BELT - REMOVAL, ACCESSORY	7-4
DRIVE BELT DIAGNOSIS - DIAGNOSIS AND TESTING, ACCESSORY	7-3
DRIVE BELT TENSIONER - INSTALLATION, ACCESSORY	7-5
DRIVE BELT TENSIONER - REMOVAL, ACCESSORY	7-5
DRIVE BELTS - DESCRIPTION	7-6
DRIVE BELTS, DIAGNOSIS AND TESTING - ACCESSORY	7-7
DRIVE MOTOR - INSTALLATION, SUNROOF	23-85
DRIVE MOTOR - REMOVAL, SUNROOF	23-84
DRIVE PLATE MISALIGNMENT - DIAGNOSIS AND TESTING	6-6
DRIVE REAR - DESCRIPTION, AXLE - FRONT WHEEL	2-29
DRIVE REAR - INSPECTION, AXLE - FRONT WHEEL	2-33
DRIVE REAR - INSTALLATION, AXLE - FRONT WHEEL	2-33

Description	Group-Page
DRIVE REAR - OPERATION, AXLE - FRONT WHEEL	2-29
DRIVE REAR - REMOVAL, AXLE - FRONT WHEEL	2-29
DRIVER AIRBAG - DESCRIPTION	8O-7
DRIVER AIRBAG - INSTALLATION	8O-9
DRIVER AIRBAG - OPERATION	8O-8
DRIVER AIRBAG - REMOVAL	8O-8
DRIVER AIRBAG COVER - INSTALLATION	8O-10
DRIVER AIRBAG COVER - REMOVAL	8O-9
DRIVER HEATED SEAT SWITCH - DESCRIPTION	8G-4
DRIVER HEATED SEAT SWITCH - DIAGNOSIS AND TESTING	8G-4
DRIVER HEATED SEAT SWITCH - INSTALLATION	8G-5
DRIVER HEATED SEAT SWITCH - OPERATION	8G-4
DRIVER HEATED SEAT SWITCH - REMOVAL	8G-5
DRIVER SEAT SWITCH - DESCRIPTION	8N-13
DRIVER SEAT SWITCH - DIAGNOSIS AND TESTING	8N-13
DRIVER SEAT SWITCH - INSTALLATION	8N-14
DRIVER SEAT SWITCH - OPERATION	8N-13
DRIVER SEAT SWITCH - REMOVAL	8N-14
DRIVING CLUTCHES - DESCRIPTION	21-223
DRIVING CLUTCHES - OPERATION	21-224
DROP - STANDARD PROCEDURE, TESTING FOR A VOLTAGE	8W-01-10
DRUM - DIAGNOSIS AND TESTING, BRAKE	5-35
DRUM - INSTALLATION	5-36
DRUM - INSTALLATION, BRAKE PADS/SHOES - REAR	5-22
DRUM - REMOVAL	5-36
DRUM - REMOVAL, BRAKE PADS/SHOES - REAR	5-19
DRUM BRAKE - INSPECTION, WHEEL CYLINDER	5-61
DRUM BRAKE - INSTALLATION, WHEEL CYLINDER	5-61
DRUM BRAKE - REMOVAL, WHEEL CYLINDER	5-60
DRUM BRAKE AUTOMATIC ADJUSTER - DIAGNOSIS AND TESTING	5-14
DRUM BRAKE SHOES - ADJUSTMENT	5-23
DRUM BRAKE SHOES - CLEANING	5-21
DRUM BRAKE SHOES - INSPECTION	5-21
DRUM BRAKES - INSTALLATION, SUPPORT PLATE	5-59
DRUM BRAKES - REMOVAL, SUPPORT PLATE	5-58
DRUM BRAKES (REAR) - DESCRIPTION	5-13
DRUM MACHINING - STANDARD PROCEDURE, BRAKE	5-35
DUCT - INSTALLATION, CENTER AIR OUTLET	24-27,24-83
DUCT - REMOVAL, CENTER AIR OUTLET	24-27, 24-83
ELECTRONIC CONTROL MODULE - INSTALLATION	23-84
ELECTRONIC CONTROL MODULE - REMOVAL	23-84
ELECTRONIC VARIABLE BRAKE PROPORTIONING - DESCRIPTION	5-74
ELECTRONIC VARIABLE BRAKE PROPORTIONING - OPERATION	5-75
ELECTROSTATIC DISCHARGE (ESD) SENSITIVE DEVICES - STANDARD PROCEDURE	8W-01-8
ELEMENT - DESCRIPTION, HEATED SEAT	8G-5
ELEMENT - DIAGNOSIS AND TESTING, HEATED SEAT	8G-6
ELEMENT - INSTALLATION, AIR CLEANER	9-173,9-25,9-96
ELEMENT - INSTALLATION, HEATED SEAT	8G-6
ELEMENT - OPERATION, HEATED SEAT	8G-6
ELEMENT - REMOVAL, AIR CLEANER	9-173, 9-25,9-96
ELEMENT - REMOVAL, HEATED SEAT	8G-6
ELEMENTS - INSTALLATION, FRONT WIPER BLADE	8R-8
ELEMENTS - REMOVAL, FRONT WIPER BLADE	8R-8
E-MARK LABEL - DESCRIPTION	Intro.-10
EMERGENCY TOW EYE - INSTALLATION, FRONT	13-13
EMERGENCY TOW EYE - INSTALLATION, REAR	13-13
EMERGENCY TOW EYE - REMOVAL, FRONT	13-13
EMERGENCY TOW EYE - REMOVAL, REAR	13-13
EMISSION CONTROL INFORMATION LABEL - DESCRIPTION, VEHICLE	25-5
END CAP - INSTALLATION, INSTRUMENT PANEL	23-57
END CAP - REMOVAL, INSTRUMENT PANEL	23-57
END PLAY - STANDARD PROCEDURE, CRANKSHAFT	9-110,9-44
END PLAY - STANDARD PROCEDURE, MEASURING CAMSHAFT	9-101,9-180
END PLAY - STANDARD PROCEDURE, MEASURING CRANKSHAFT	9-189
ENGINE - 1.6L SOHC - DESCRIPTION	7-13
ENGINE - 1.6L SOHC - OPERATION	7-13
ENGINE - 2.0/2.4L DOHC - DESCRIPTION	7-32
ENGINE - 2.0/2.4L DOHC - OPERATION	7-32
ENGINE - DESCRIPTION, 1.6L	19-37
ENGINE - DESCRIPTION, 2.0L/2.4L/2.4L TURBO	19-38
ENGINE - INSTALLATION, 1.6L	19-45,19-64
ENGINE - INSTALLATION, 2.0L	19-51
ENGINE - INSTALLATION, 2.0L/2.4L	19-45,19-58, 19-61,19-64
ENGINE - INSTALLATION, 2.4L	19-52
ENGINE - INSTALLATION, DIESEL	8F-16,8F-20
ENGINE - INSTALLATION, GASOLINE	8F-16, 8F-20
ENGINE - REMOVAL, 1.6L	19-39,19-62
ENGINE - REMOVAL, 2.0L	19-48
ENGINE - REMOVAL, 2.0L/2.4L	19-39,19-57, 19-59,19-63
ENGINE - REMOVAL, 2.4L	19-49
ENGINE - REMOVAL, DIESEL	8F-14,8F-20
ENGINE - REMOVAL, GASOLINE	8F-14,8F-20
ENGINE - STANDARD PROCEDURE, HYDROSTATIC LOCKED	9-11,9-158,9-82
ENGINE 1.6L SOHC - DESCRIPTION	9-3
ENGINE 2.0L DOHC - DESCRIPTION	9-75
ENGINE 2.4L DOHC - DESCRIPTION	9-151
ENGINE ASSEMBLY - INSTALLATION	9-15,9-164, 9-87
ENGINE ASSEMBLY - REMOVAL	9-13,9-160,9-84
ENGINE BLOCK - CLEANING	9-109,9-188,9-43
ENGINE BLOCK - DESCRIPTION	9-108,9-187, 9-41
ENGINE BLOCK - INSPECTION	9-109,9-188,9-43
ENGINE BLOCK HEATER - DESCRIPTION	7-19, 7-48
ENGINE BLOCK HEATER - INSTALLATION	7-19
ENGINE BLOCK HEATER - OPERATION	7-19,7-48
ENGINE BLOCK HEATER - REMOVAL	7-19
ENGINE BLOCK HEATER, DIAGNOSIS AND TESTING	7-49
ENGINE BLOCK HEATER TESTING - DIAGNOSIS AND TESTING	7-19
ENGINE CABIN HEATER - DIAGNOSIS AND TESTING, DIESEL	24-111,24-56
ENGINE COOLANT - DESCRIPTION	0-3
ENGINE COOLANT TEMP SENSOR - DESCRIPTION	7-20
ENGINE COOLANT TEMP SENSOR - INSTALLATION	7-20
ENGINE COOLANT TEMP SENSOR - OPERATION	7-20
ENGINE COOLANT TEMP SENSOR - REMOVAL	7-20
ENGINE COOLANT TEMPERATURE SENSOR - DESCRIPTION	7-49
ENGINE COOLANT TEMPERATURE SENSOR - INSTALLATION	7-50
ENGINE COOLANT TEMPERATURE SENSOR - OPERATION	7-49
ENGINE COOLANT TEMPERATURE SENSOR - REMOVAL	7-50
ENGINE COOLANT THERMOSTAT - DESCRIPTION	7-50
ENGINE COOLANT THERMOSTAT - DIAGNOSIS AND TESTING	7-51
ENGINE COOLANT THERMOSTAT - INSTALLATION	7-51
ENGINE COOLANT THERMOSTAT - OPERATION	7-51
ENGINE COOLANT THERMOSTAT - REMOVAL	7-51
ENGINE COOLANT THERMOSTAT AND HOUSING - INSTALLATION	7-20
ENGINE COOLANT THERMOSTAT AND HOUSING - REMOVAL	7-20
ENGINE COOLING SYSTEM REQUIREMENTS, DESCRIPTION	24-3,24-59
ENGINE CORE AND OIL GALLERY PLUGS - STANDARD PROCEDURE	9-13,9-160,9-84
ENGINE DIAGNOSIS - INTRODUCTION - DIAGNOSIS AND TESTING	9-151,9-76
ENGINE DIAGNOSIS - MECHANICAL - DIAGNOSIS AND TESTING	9-154,9-78
ENGINE DIAGNOSIS - PERFORMANCE - DIAGNOSIS AND TESTING	9-152,9-76
ENGINE GASKET SURFACE PREPARATION - STANDARD PROCEDURE	9-12,9-159,9-83
ENGINE MECHANICAL - DIAGNOSIS AND TESTING	9-6
ENGINE MOUNT BRACKET - INSTALLATION, RIGHT	9-55
ENGINE MOUNT BRACKET - REMOVAL, RIGHT	9-54
ENGINE MOUNTING - DESCRIPTION	9-122, 9-202,9-52
ENGINE MOUNTING - OPERATION	9-122,9-202
ENGINE OIL AND FILTER CHANGE - STANDARD PROCEDURE	9-129,9-207
ENGINE OIL AND LUBRICANTS - DESCRIPTION	0-1
ENGINE OIL LEAK INSPECTION - DIAGNOSIS AND TESTING	9-10,9-157,9-81
ENGINE OIL LEVEL CHECK, STANDARD PROCEDURE	9-128,9-207
ENGINE OIL PRESSURE - DIAGNOSIS AND TESTING, CHECKING	9-126,9-206,9-57
ENGINE PERFORMANCE - DIAGNOSIS AND TESTING	9-4
ENGINE, SPECIAL TOOLS - 1.6L SOHC	9-21
ENGINE, SPECIAL TOOLS - 2.0L DOHC	9-92
ENGINE, SPECIAL TOOLS - 2.4L	9-170
ENGINE, SPECIFICATIONS - 1.6L SOHC	9-17
ENGINE, SPECIFICATIONS - 2.0L DOHC	9-89
ENGINE, SPECIFICATIONS - 2.4L	9-166
ENGINE TORQUE STRUT ADJUSTMENT, ADJUSTMENTS	9-125,9-205
ENGINES - INSTALLATION, NON-TURBO	19-47
ENGINES - REMOVAL, NON-TURBO	19-47
ENTRY MODULE - DIAGNOSIS AND TESTING, REMOTE KEYLESS	8N-5
ENTRY MODULE - INSTALLATION, REMOTE KEYLESS	8N-5
ENTRY MODULE - REMOVAL, REMOTE KEYLESS	8N-5
ENTRY TRANSMITTER - DESCRIPTION, REMOTE KEYLESS	8N-6
ENTRY TRANSMITTER - DIAGNOSIS AND TESTING, REMOTE KEYLESS	8N-6
ENTRY TRANSMITTER - OPERATION, REMOTE KEYLESS	8N-6
EVACUATING REFRIGERANT SYSTEM - STANDARD PROCEDURE	24-62,24-8
EVAPORATION CONTROL SYSTEM - OPERATION	25-11
EVAPORATOR - DESCRIPTION, A/C	24-38
EVAPORATOR - INSTALLATION, A/C	24-39,24-94
EVAPORATOR - OPERATION, A/C	24-38
EVAPORATOR - REMOVAL, A/C	24-38,24-93
EVAP/PURGE SOLENOID - DESCRIPTION	25-13
EVAP/PURGE SOLENOID - OPERATION	25-13
EXCEPT DIESEL AND TURBO MODELS - INSTALLATION	3-8
EXCEPT DIESEL AND TURBO MODELS - REMOVAL	3-4
EXHAUST MANIFOLD - CLEANING	9-140,9-224, 9-64
EXHAUST MANIFOLD - INSPECTION	9-140, 9-224,9-64
EXHAUST MANIFOLD - INSTALLATION	9-141, 9-224,9-64
EXHAUST MANIFOLD - REMOVAL	9-140,9-223, 9-64
EXHAUST SYSTEM - DESCRIPTION	11-2

Description	Group-Page
EXHAUST SYSTEM ALIGNMENT, ADJUSTMENTS	11-3
EXHAUST SYSTEM CLEARANCE, SPECIFICATIONS	11-4
EXHAUST SYSTEM COMPONENTS - TORQUE	11-5
EXHAUST SYSTEM DIAGNOSIS, DIAGNOSIS AND TESTING	11-2
EXHAUST SYSTEM RESTRICTION CHECK - DIAGNOSIS AND TESTING	11-3
EXHAUST SYSTEM, SPECIAL TOOLS	11-5
EXPORT - DESCRIPTION, AIR FILTER	24-26, 24-81
EXPORT - DESCRIPTION, FRONT POSITION LAMP	8L-9
EXPORT - DESCRIPTION, HEADLAMP LEVELING MOTOR	8L-15
EXPORT - DESCRIPTION, HEADLAMP LEVELING SWITCH	8L-17
EXPORT - DESCRIPTION, HEATER CORE	24-97
EXPORT - DESCRIPTION, INTRUSION SENSOR	8Q-5
EXPORT - DESCRIPTION, REAR FOG LAMP SWITCH	8L-25
EXPORT - DESCRIPTION, SIREN	8Q-7
EXPORT - DIAGNOSIS AND TESTING, FRONT POSITION LAMP	8L-9
EXPORT - DIAGNOSIS AND TESTING, HEADLAMP LEVELING MOTOR	8L-16
EXPORT - DIAGNOSIS AND TESTING, HEADLAMP LEVELING SWITCH	8L-17
EXPORT - INSTALLATION, AIR FILTER	24-26, 24-82
EXPORT - INSTALLATION, DOME LAMP UNIT WITH INTRUSION SENSOR	8L-31
EXPORT - INSTALLATION, DOME LAMP WITH INTRUSION SENSOR	8L-30
EXPORT - INSTALLATION, FRONT POSITION LAMP	8L-10
EXPORT - INSTALLATION, HEADLAMP LEVELING MOTOR	8L-17
EXPORT - INSTALLATION, HEADLAMP LEVELING SWITCH	8L-18
EXPORT - INSTALLATION, HEATER CORE	24-99
EXPORT - INSTALLATION, HOOD AJAR SWITCH	8Q-5
EXPORT - INSTALLATION, INTRUSION SENSOR	8Q-6
EXPORT - INSTALLATION, SIDE REPEATER LAMP	8L-26
EXPORT - INSTALLATION, SIDE REPEATER LAMP UNIT	8L-26
EXPORT - INSTALLATION, SIREN	8Q-8
EXPORT - OPERATION, FRONT POSITION LAMP	8L-9
EXPORT - OPERATION, HEADLAMP LEVELING MOTOR	8L-16
EXPORT - OPERATION, HEADLAMP LEVELING SWITCH	8L-17
EXPORT - OPERATION, HEATER CORE	24-98
EXPORT - OPERATION, INTRUSION SENSOR	8Q-5
EXPORT - OPERATION, REAR FOG LAMP SWITCH	8L-25
EXPORT - OPERATION, SIREN	8Q-7
EXPORT - REMOVAL, AIR FILTER	24-26,24-81
EXPORT - REMOVAL, DOME LAMP UNIT WITH INTRUSION SENSOR	8L-30
EXPORT - REMOVAL, DOME LAMP WITH INTRUSION SENSOR	8L-30
EXPORT - REMOVAL, FRONT POSITION LAMP	8L-10
EXPORT - REMOVAL, HEADLAMP LEVELING MOTOR	8L-16
EXPORT - REMOVAL, HEADLAMP LEVELING SWITCH	8L-17
EXPORT - REMOVAL, HEATER CORE	24-98
EXPORT - REMOVAL, HOOD AJAR SWITCH	8Q-5
EXPORT - REMOVAL, INTRUSION SENSOR	8Q-5
EXPORT - REMOVAL, SIDE REPEATER LAMP	8L-26
EXPORT - REMOVAL, SIDE REPEATER LAMP UNIT	8L-26
EXPORT - REMOVAL, SIREN	8Q-7
EXPORT - SPECIAL TOOLS	8I-3
EXPORT - STANDARD PROCEDURE, HEADLAMP UNIT ALIGNMENT	8L-13
EXTERIOR BADGING - INSTALLATION	23-36
EXTERIOR BADGING - REMOVAL	23-35
EXTERIOR LAMPS, SPECIFICATIONS	8L-2
EXTERIOR METHOD - REMOVAL	23-78
EYE - INSTALLATION, FRONT EMERGENCY TOW	13-13
EYE - INSTALLATION, REAR EMERGENCY TOW	13-13
EYE - REMOVAL, FRONT EMERGENCY TOW	13-13
EYE - REMOVAL, REAR EMERGENCY TOW	13-13
FACTOR SETTING - STANDARD PROCEDURE, PINION	8E-10
FAN - DESCRIPTION, RADIATOR	7-23,7-52
FAN - DIAGNOSIS AND TESTING, RADIATOR	7-24
FAN - INSTALLATION, RADIATOR	7-25
FAN - OPERATION, RADIATOR	7-23,7-53
FAN - REMOVAL, RADIATOR	7-24
FAN MOTOR TEST, DIAGNOSIS AND TESTING - RADIATOR	7-54
FASCIA - INSTALLATION, FRONT BUMPER	13-2
FASCIA - INSTALLATION, REAR BUMPER	13-3
FASCIA - REMOVAL, FRONT BUMPER	13-2
FASCIA - REMOVAL, REAR BUMPER	13-3
FASTEN SEAT BELTS - DIAGNOSIS AND TESTING	8B-2
FASTENER IDENTIFICATION - DESCRIPTION	Intro.-2
FASTENER TORQUE - SPECIFICATIONS, ABS	5-78
FASTENER TORQUE - SPECIFICATIONS, POWER STEERING	19-8
FASTENER TORQUE - SPECIFICATIONS, STEERING COLUMN	19-18
FASTENER TORQUE, SPECIFICATIONS - BRAKE	5-8
FASTENER TORQUE, SPECIFICATIONS - FRONT SUSPENSION	2-4
FASTENER TORQUE, SPECIFICATIONS - REAR SUSPENSION	2-28
FASTENER USAGE - DESCRIPTION	Intro.-5
FEED CIRCUIT RESISTANCE TEST - DIAGNOSIS AND TESTING	8F-38
FEED CIRCUIT TEST - DIAGNOSIS AND TESTING	8F-39
FEED TROUGH - INSTALLATION, REAR BEARING OIL	21-144
FEED TROUGH - REMOVAL, REAR BEARING OIL	21-144
FENDER - INSTALLATION, FRONT	23-37
FENDER - REMOVAL, FRONT	23-37
FILL - DIAGNOSIS AND TESTING, VEHICLE DOES NOT	25-17
FILL - STANDARD PROCEDURE, FLUID DRAIN	21-126,21-58
FILL DOOR - INSTALLATION, FUEL	23-37
FILL DOOR - REMOVAL, FUEL	23-37
FILL/CHECK LOCATIONS - DESCRIPTION, FLUID	0-5
FILLER CAP - DESCRIPTION, FUEL	25-14
FILLER CAP - OPERATION, FUEL	25-14
FILLER TUBE - INSTALLATION, FUEL TANK	14-17
FILLER TUBE - REMOVAL, FUEL TANK	14-16
FILLING COOLING SYSTEM - STANDARD PROCEDURE	7-15,7-41
FILTER - DESCRIPTION, FUEL	14-4
FILTER - DESCRIPTION, INLET	14-17
FILTER - EXPORT - DESCRIPTION, AIR	24-26, 24-81
FILTER - EXPORT - INSTALLATION, AIR	24-26, 24-82
FILTER - EXPORT - REMOVAL, AIR	24-26,24-81
FILTER - INSTALLATION, OIL	9-129,9-209
FILTER - REMOVAL, OIL	9-129,9-209
FILTER ADAPTER - INSTALLATION, OIL	9-130, 9-209
FILTER ADAPTER - REMOVAL, OIL	9-130,9-209
FILTER CARTRIDGE - INSTALLATION, OIL	9-59
FILTER CARTRIDGE - REMOVAL, OIL	9-59
FILTER CARTRIDGE HOUSING - DESCRIPTION, OIL	9-60
FILTER CARTRIDGE HOUSING - INSTALLATION, OIL	9-60
FILTER CARTRIDGE HOUSING - REMOVAL, OIL	9-60
FILTER CHANGE - STANDARD PROCEDURE, ENGINE OIL	9-129,9-207
FILTER SERVICE - STANDARD PROCEDURE, FLUID	21-233
FINAL DRIVE - ASSEMBLY	21-228
FINAL DRIVE - DESCRIPTION	21-224
FINAL DRIVE - DISASSEMBLY	21-225
FINAL DRIVE - OPERATION	21-224
FINESSE SANDING/BUFFING & POLISHING - DESCRIPTION	23-67
FINISH - DESCRIPTION, BASECOAT/ CLEARCOAT	23-66
FIRING ORDER, 1.6/2.0L	8I-2
FITTING - CONNECTING ROD	9-119,9-198
FITTING - PISTON RING	9-198
FITTING - STANDARD PROCEDURE, CONNECTING ROD AND BEARING	9-48
FITTING - STANDARD PROCEDURE, CYLINDER BORE AND PISTON	9-48
FITTING - STANDARD PROCEDURE, PISTON RING	9-120,9-50
FITTING - STANDARD PROCEDURE, PISTON TO CYLINDER BORE	9-117,9-195
FITTINGS - STANDARD PROCEDURE, HANDLING TUBING	24-5,24-61
FITTINGS - STANDARD PROCEDURE, QUICK-CONNECT	14-17
FLASHER - DESCRIPTION, COMBINATION	8L-6
FLASHER - INSTALLATION, COMBINATION	8L-6
FLASHER - OPERATION, COMBINATION	8L-6
FLASHER - REMOVAL, COMBINATION	8L-6
FLOOD LAMP - INSTALLATION, CENTER CONSOLE	8L-29
FLOOD LAMP - REMOVAL, CENTER CONSOLE	8L-29
FLOOD LAMP HOUSING - INSTALLATION, CENTER CONSOLE	8L-29
FLOOD LAMP HOUSING - REMOVAL, CENTER CONSOLE	8L-29
FLOOR CARPET - INSTALLATION	23-61
FLOOR CARPET - REMOVAL	23-61
FLOW AND PRESSURE TEST - DIAGNOSIS AND TESTING, POWER STEERING	19-1
FLOW CHECK - DIAGNOSIS AND TESTING, COOLING SYSTEM	7-14,7-40
FLOW DISTRIBUTION - DESCRIPTION, AIR	24-26,24-82
FLOW DISTRIBUTION - OPERATION, AIR	24-27, 24-82
FLUID - DESCRIPTION, TRANSMISSION	0-3
FLUID AND FILTER SERVICE - STANDARD PROCEDURE	21-233
FLUID CAPACITIES - SPECIFICATIONS	0-5
FLUID CONTAMINATION - DIAGNOSIS AND TESTING, BRAKE	5-37
FLUID COOLER - DESCRIPTION	19-47
FLUID DRAIN AND FILL - STANDARD PROCEDURE	21-126,21-58
FLUID FILL/CHECK LOCATIONS - DESCRIPTION	0-5
FLUID LEAKAGE - DIAGNOSIS AND TESTING, TORQUE CONVERTER HOUSING	21-158
FLUID LEVEL AND CONDITION CHECK, STANDARD PROCEDURE	21-231
FLUID LEVEL CHECKING - STANDARD PROCEDURE	21-58
FLUID LEVEL CHECKING - STANDARD PROCEDURE, BRAKE	5-37
FLUID LEVEL CHECKING - STANDARD PROCEDURE, POWER STEERING	19-46
FLUID LEVEL SWITCH - INSTALLATION, BRAKE	5-10
FLUID LEVEL SWITCH - REMOVAL, BRAKE	5-10
FLUID RESERVOIR - INSTALLATION	5-38
FLUID RESERVOIR - REMOVAL	5-37
FLUID, SPECIFICATIONS - BRAKE	5-37
FLUSH MEASUREMENTS - SPECIFICATIONS, BODY GAP	23-95
FLYWHEEL - DESCRIPTION	6-20
FLYWHEEL - INSTALLATION	6-21

Description	Group-Page
FLYWHEEL - OPERATION	6-21
FLYWHEEL - REMOVAL	6-21
FOG LAMP - DIAGNOSIS AND TESTING	8L-7
FOG LAMP - INSTALLATION	8L-8
FOG LAMP - REMOVAL	8L-8
FOG LAMP SWITCH - EXPORT - DESCRIPTION, REAR	8L-25
FOG LAMP SWITCH - EXPORT - OPERATION, REAR	8L-25
FOG LAMP UNIT - INSTALLATION	8L-8
FOG LAMP UNIT - REMOVAL	8L-8
FOG LAMP UNIT ALIGNMENT - STANDARD PROCEDURE	8L-8
FOLDAWAY MIRROR SWITCH - RHD - DIAGNOSIS AND TESTING, POWER	8N-10
FOLDAWAY MIRROR SWITCH - RHD - INSTALLATION, POWER	8N-11
FOLDAWAY MIRROR SWITCH - RHD - REMOVAL, POWER	8N-11
FORK - DISASSEMBLY, SHIFT RAIL	21-146
FORM-IN-PLACE GASKETS AND SEALERS - STANDARD PROCEDURE	9-11,9-158, 9-82
FRAME DIMENSIONS - SPECIFICATIONS	13-4
FRONT - ASSEMBLY, DISC BRAKE CALIPER	5-25
FRONT - DISASSEMBLY, DISC BRAKE CALIPER	5-24
FRONT - INSTALLATION, BRAKE PADS/SHOES	5-16
FRONT - INSTALLATION, CRANKSHAFT OIL SEAL	9-114,9-192,9-47
FRONT - INSTALLATION, DISC BRAKE CALIPER	5-26
FRONT - INSTALLATION, DISC BRAKE CALIPER ADAPTER	5-34
FRONT - INSTALLATION, WHEEL MOUNTING STUDS	22-15
FRONT - REMOVAL, BRAKE PADS/SHOES	5-15
FRONT - REMOVAL, CRANKSHAFT OIL SEAL	9-114,9-192,9-47
FRONT - REMOVAL, DISC BRAKE CALIPER	5-24
FRONT - REMOVAL, DISC BRAKE CALIPER ADAPTER	5-33
FRONT - REMOVAL, WHEEL MOUNTING STUDS	22-14
FRONT AND REAR DOOR OPENING WEATHERSTRIP - INSTALLATION	23-90
FRONT AND REAR DOOR OPENING WEATHERSTRIP - REMOVAL	23-90
FRONT AND REAR DOOR UPPER SECONDARY WEATHERSTRIP - INSTALLATION	23-90
FRONT AND REAR DOOR UPPER SECONDARY WEATHERSTRIP - REMOVAL	23-90
FRONT BRAKE ROTOR - INSTALLATION	5-57
FRONT BRAKE ROTOR - REMOVAL	5-56
FRONT BUMPER FASCIA - INSTALLATION	13-2
FRONT BUMPER FASCIA - REMOVAL	13-2
FRONT BUMPER REINFORCEMENT - INSTALLATION	13-1
FRONT BUMPER REINFORCEMENT - REMOVAL	13-1
FRONT CROSSMEMBER - INSTALLATION	13-11
FRONT CROSSMEMBER - REMOVAL	13-9
FRONT DOOR - INSTALLATION	23-20
FRONT DOOR - REMOVAL	23-20
FRONT DOOR APPLIQUE - INSTALLATION	23-19
FRONT DOOR APPLIQUE - REMOVAL	23-19
FRONT DOOR CHECK STRAP - INSTALLATION	23-20
FRONT DOOR CHECK STRAP - REMOVAL	23-20
FRONT DOOR GLASS - INSTALLATION	23-21
FRONT DOOR GLASS - REMOVAL	23-21
FRONT DOOR GLASS RUN WEATHERSTRIP - INSTALLATION	23-90
FRONT DOOR GLASS RUN WEATHERSTRIP - REMOVAL	23-90
FRONT DOOR HINGE - INSTALLATION	23-22
FRONT DOOR HINGE - REMOVAL	23-22
FRONT DOOR INNER BELT WEATHERSTRIP - INSTALLATION	23-92
FRONT DOOR INNER BELT WEATHERSTRIP - REMOVAL	23-92
FRONT DOOR INSIDE HANDLE ACTUATOR - INSTALLATION	23-23
FRONT DOOR INSIDE HANDLE ACTUATOR - REMOVAL	23-22
FRONT DOOR LATCH - INSTALLATION	23-23
FRONT DOOR LATCH - REMOVAL	23-23
FRONT DOOR LATCH ADJUSTMENT, ADJUSTMENTS	23-24
FRONT DOOR LATCH STRIKER - INSTALLATION	23-24
FRONT DOOR LATCH STRIKER - REMOVAL	23-24
FRONT DOOR LOCK CYLINDER - INSTALLATION	23-25
FRONT DOOR LOCK CYLINDER - REMOVAL	23-25
FRONT DOOR OUTER BELT WEATHERSTRIP - INSTALLATION	23-92
FRONT DOOR OUTER BELT WEATHERSTRIP - REMOVAL	23-92
FRONT DOOR OUTSIDE HANDLE - INSTALLATION	23-21
FRONT DOOR OUTSIDE HANDLE - REMOVAL	23-21
FRONT DOOR TRIM PANEL - INSTALLATION	23-25
FRONT DOOR TRIM PANEL - REMOVAL	23-25
FRONT DOOR VERTICAL GUIDE BAR - INSTALLATION	23-25
FRONT DOOR VERTICAL GUIDE BAR - REMOVAL	23-25
FRONT DOOR WATER DAM - INSTALLATION	23-27
FRONT DOOR WATER DAM - REMOVAL	23-26
FRONT DOOR WINDOW REGULATOR - INSTALLATION	23-27
FRONT DOOR WINDOW REGULATOR - REMOVAL	23-27
FRONT EMERGENCY TOW EYE - INSTALLATION	13-13
FRONT EMERGENCY TOW EYE - REMOVAL	13-13
FRONT FENDER - INSTALLATION	23-37
FRONT FENDER - REMOVAL	23-37
FRONT POSITION LAMP - EXPORT - DESCRIPTION	8L-9
FRONT POSITION LAMP - EXPORT - DIAGNOSIS AND TESTING	8L-9
FRONT POSITION LAMP - EXPORT - INSTALLATION	8L-10
FRONT POSITION LAMP - EXPORT - OPERATION	8L-9
FRONT POSITION LAMP - EXPORT - REMOVAL	8L-10
FRONT SEAT - INSTALLATION	23-68
FRONT SEAT - REMOVAL	23-68
FRONT SEAT BACK - INSTALLATION	23-69
FRONT SEAT BACK - REMOVAL	23-69
FRONT SEAT BACK COVER - INSTALLATION	23-69
FRONT SEAT BACK COVER - REMOVAL	23-69
FRONT SEAT BELT & RETRACTOR - INSTALLATION	8O-11
FRONT SEAT BELT & RETRACTOR - REMOVAL	8O-11
FRONT SEAT BELT BUCKLE - INSTALLATION	8O-11
FRONT SEAT BELT BUCKLE - REMOVAL	8O-11
FRONT SEAT BELT HEIGHT ADJUSTER - INSTALLATION	8O-12
FRONT SEAT BELT HEIGHT ADJUSTER - REMOVAL	8O-12
FRONT SEAT CUSHION - INSTALLATION	23-70
FRONT SEAT CUSHION - REMOVAL	23-70
FRONT SEAT CUSHION COVER - INSTALLATION	23-70
FRONT SEAT CUSHION COVER - REMOVAL	23-70
FRONT SEAT HEAD RESTRAINT - INSTALLATION	23-70
FRONT SEAT HEAD RESTRAINT - REMOVAL	23-70
FRONT SHAFT SEAL - DESCRIPTION, COMPRESSOR	24-33,24-88
FRONT SIDE RAIL ACCESS PULLEY SPLASH SHIELD - INSTALLATION	23-38
FRONT SIDE RAIL ACCESS PULLEY SPLASH SHIELD - REMOVAL	23-38
FRONT SUSPENSION - DESCRIPTION	2-2
FRONT SUSPENSION - OPERATION	2-2
FRONT SUSPENSION FASTENER TORQUE, SPECIFICATIONS	2-4
FRONT SUSPENSION, SPECIAL TOOLS	2-4
FRONT WASHER NOZZLE - INSTALLATION	8R-6
FRONT WASHER NOZZLE - REMOVAL	8R-6
FRONT WHEEL DRIVE REAR - DESCRIPTION, AXLE	2-29
FRONT WHEEL DRIVE REAR - INSPECTION, AXLE	2-33
FRONT WHEEL DRIVE REAR - INSTALLATION, AXLE	2-33
FRONT WHEEL DRIVE REAR - OPERATION, AXLE	2-29
FRONT WHEEL DRIVE REAR - REMOVAL, AXLE	2-29
FRONT WHEEL SPEED SENSOR - DESCRIPTION	5-78
FRONT WHEEL SPEED SENSOR - INSTALLATION	5-80
FRONT WHEEL SPEED SENSOR - OPERATION	5-78
FRONT WHEEL SPEED SENSOR - REMOVAL	5-79
FRONT WHEELHOUSE SPLASH SHIELDS - INSTALLATION	23-36
FRONT WHEELHOUSE SPLASH SHIELDS - REMOVAL	23-36
FRONT WIPER ARMS - ADJUSTMENT	8R-7
FRONT WIPER ARMS - INSTALLATION	8R-7
FRONT WIPER ARMS - REMOVAL	8R-6
FRONT WIPER ARMS - RHD - ADJUSTMENT	8R-7
FRONT WIPER BLADE ELEMENTS - INSTALLATION	8R-8
FRONT WIPER BLADE ELEMENTS - REMOVAL	8R-8
FRONT WIPER BLADES - CLEANING	8R-8
FRONT WIPER BLADES - INSTALLATION	8R-8
FRONT WIPER BLADES - REMOVAL	8R-7
FRONT WIPER CONDITIONS - DIAGNOSIS AND TESTING	8R-3
FRONT WIPER MODULE - INSTALLATION	8R-9
FRONT WIPER MODULE - REMOVAL	8R-9
FRONT WIPER MODULE - RHD - INSTALLATION	8R-10
FRONT WIPER MODULE - RHD - REMOVAL	8R-10
FRONT WIPER MOTOR - INSTALLATION	8R-12
FRONT WIPER MOTOR - REMOVAL	8R-12
FRONT WIPER MOTOR - RHD - INSTALLATION	8R-13
FRONT WIPER MOTOR - RHD - REMOVAL	8R-12
FRONT WIPER SWITCH - INSTALLATION	8R-13
FRONT WIPER SWITCH - REMOVAL	8R-13
FRONT WIPER/WASHER SWITCH - DIAGNOSIS AND TESTING	8R-13
FUEL CORRECTION OR ADAPTIVE MEMORIES, OPERATION	14-23
FUEL DELIVERY - DESCRIPTION	14-2
FUEL DELIVERY - OPERATION	14-2
FUEL DELIVERY SYSTEM - DIAGNOSIS AND TESTING	14-2
FUEL FILL DOOR - INSTALLATION	23-37
FUEL FILL DOOR - REMOVAL	23-37
FUEL FILLER CAP - DESCRIPTION	25-14
FUEL FILLER CAP - OPERATION	25-14
FUEL FILTER - DESCRIPTION	14-4
FUEL INJECTOR - DESCRIPTION	14-30
FUEL INJECTOR - OPERATION	14-30
FUEL LEVEL SENDING UNIT / SENSOR - DESCRIPTION	14-4
FUEL LEVEL SENDING UNIT / SENSOR - INSTALLATION	14-5
FUEL LEVEL SENDING UNIT / SENSOR - OPERATION	14-4
FUEL LEVEL SENDING UNIT / SENSOR - REMOVAL	14-4
FUEL LINES/HOSES AND CLAMPS - DESCRIPTION	14-5
FUEL PRESSURE REGULATOR - DESCRIPTION	14-6
FUEL PRESSURE REGULATOR - INSTALLATION	14-7

Description	Group-Page
FUEL PRESSURE REGULATOR - OPERATION	14-6
FUEL PRESSURE REGULATOR - REMOVAL	14-6
FUEL PUMP - DESCRIPTION	14-7
FUEL PUMP - OPERATION	14-7
FUEL PUMP MODULE - DESCRIPTION	14-7
FUEL PUMP MODULE - INSTALLATION	14-8
FUEL PUMP MODULE - OPERATION	14-7
FUEL PUMP MODULE - REMOVAL	14-8
FUEL PUMP RELAY - DESCRIPTION	14-36
FUEL PUMP RELAY - OPERATION	14-36
FUEL RAIL - DESCRIPTION	14-9
FUEL RAIL - OPERATION	14-9
FUEL REQUIREMENTS - DESCRIPTION	0-3
FUEL, SPECIAL TOOLS	14-26,14-3
FUEL SYSTEM PRESSURE RELEASE PROCEDURE - STANDARD PROCEDURE	14-2
FUEL SYSTEM PRESSURE, SPECIFICATIONS	14-3
FUEL TANK - DESCRIPTION	14-14
FUEL TANK - INSTALLATION	14-16
FUEL TANK - OPERATION	14-14
FUEL TANK - REMOVAL	14-15
FUEL TANK - STANDARD PROCEDURE, DRAINING	14-2
FUEL TANK FILLER TUBE - INSTALLATION	14-17
FUEL TANK FILLER TUBE - REMOVAL	14-16
FUNCTIONS - DESCRIPTION, CIRCUIT	8W-01-6
FUSE - DESCRIPTION, IOD	8W-97-4
FUSE - INSTALLATION, IOD	8W-97-5
FUSE - OPERATION, IOD	8W-97-4
FUSE - REMOVAL, IOD	8W-97-5
FUSE BLOCK - DESCRIPTION	8W-97-4
FUSE BLOCK - INSTALLATION	8W-97-4
FUSE BLOCK - OPERATION	8W-97-4
FUSE BLOCK - REMOVAL	8W-97-4
FUSES POWERING SEVERAL LOADS - STANDARD PROCEDURE, TESTING FOR A SHORT TO GROUND ON	8W-01-9
G288 MANUAL TRANSAXLE - DESCRIPTION	21-2
G288 MANUAL TRANSAXLE - OPERATION	21-5
GALLERY PLUGS - STANDARD PROCEDURE, ENGINE CORE AND OIL	9-13, 9-160,9-84
GAP AND FLUSH MEASUREMENTS - SPECIFICATIONS, BODY	23-95
GAP, SPECIFICATIONS - WHEEL SPEED SENSOR AIR	5-78
GASKET - DIAGNOSIS AND TESTING, CYLINDER HEAD	9-174,9-9,9-96
GASKET SURFACE PREPARATION - STANDARD PROCEDURE, ENGINE	9-12,9-159, 9-83
GASKETS AND SEALERS - STANDARD PROCEDURE, FORM-IN-PLACE	9-11,9-158,9-82
GASOLINE ENGINE - INSTALLATION	8F-16,8F-20
GASOLINE ENGINE - REMOVAL	8F-14,8F-20
GAUGES INOPERATIVE - DIAGNOSIS AND TESTING, MULTIPLE/INDIVIDUAL	8J-3
GEAR - DESCRIPTION	19-28
GEAR - OPERATION	19-28
GEAR SHIFT BOOT - INSTALLATION	21-127, 21-59
GEAR SHIFT BOOT - REMOVAL	21-126,21-59
GEAR SHIFT CABLE - INSTALLATION	21-130, 21-236,21-63
GEAR SHIFT CABLE - REMOVAL	21-127,21-234, 21-59
GEAR SHIFT KNOB - INSTALLATION	21-134, 21-66
GEAR SHIFT KNOB - REMOVAL	21-134,21-66
GEAR SHIFT MECHANISM - INSTALLATION	21-134,21-68
GEAR SHIFT MECHANISM - REMOVAL	21-134, 21-67
GEARSHIFT CABLE, ADJUSTMENTS	21-237
GEARSHIFT CROSSOVER CABLE - ADJUSTMENT	21-133,21-66
GEARTRAIN - DESCRIPTION, PLANETARY	21-264
GEARTRAIN - OPERATION, PLANETARY	21-264
GENERAL - WARNINGS	8W-01-7
GENERAL DIAGNOSIS - DIAGNOSIS AND TESTING, 41TE TRANSAXLE	21-153
GENERATOR - DESCRIPTION	8F-26
GENERATOR - OPERATION	8F-26
GLASS - INSTALLATION, FRONT DOOR	23-21
GLASS - INSTALLATION, REAR DOOR	23-30
GLASS - INSTALLATION, SIDE VIEW MIRROR	23-41
GLASS - REMOVAL, FRONT DOOR	23-21
GLASS - REMOVAL, REAR DOOR	23-30
GLASS - REMOVAL, SIDE VIEW MIRROR	23-41
GLASS PANEL - INSTALLATION	23-86
GLASS PANEL - REMOVAL	23-86
GLASS PANEL ADJUSTMENT, ADJUSTMENTS - SUNROOF	23-86
GLASS PANEL SEAL - INSTALLATION, SUNROOF	23-87
GLASS PANEL SEAL - REMOVAL, SUNROOF	23-87
GLASS RUN WEATHERSTRIP - INSTALLATION, FRONT DOOR	23-90
GLASS RUN WEATHERSTRIP - INSTALLATION, REAR DOOR	23-93
GLASS RUN WEATHERSTRIP - REMOVAL, FRONT DOOR	23-90
GLASS RUN WEATHERSTRIP - REMOVAL, REAR DOOR	23-92
GLOVE BOX - INSTALLATION	23-48
GLOVE BOX - REMOVAL	23-48
GLOVE BOX LATCH - INSTALLATION	23-49
GLOVE BOX LATCH - REMOVAL	23-49
GLOVE BOX LOCK CYLINDER - INSTALLATION	23-50
GLOVE BOX LOCK CYLINDER - REMOVAL	23-49
GRAIN/FLAME DECALS - INSTALLATION, WOOD	23-41
GRAIN/FLAME DECALS - REMOVAL, WOOD	23-41
GRID LINE AND TERMINAL REPAIR, STANDARD PROCEDURE	8G-13
GRID LINES, DIAGNOSIS AND TESTING	8G-12
GRID LINES, STANDARD PROCEDURE - REAR WINDOW DEFOGGER	8G-13
GRILLE - INSTALLATION	23-38
GRILLE - REMOVAL	23-38
GRILLE SCREEN - INSTALLATION, COWL	23-35
GRILLE SCREEN - REMOVAL, COWL	23-35
GROUND - OPERATION, PCM	8E-5
GROUND - STANDARD PROCEDURE, TESTING FOR A SHORT TO	8W-01-9
GROUND AND SPLICE INFORMATION - DESCRIPTION, CONNECTOR	8W-01-7
GROUND ON FUSES POWERING SEVERAL LOADS - STANDARD PROCEDURE, TESTING FOR A SHORT TO	8W-01-9
GUARD - DESCRIPTION, THERMAL	8F-21
GUARD - INSTALLATION, THERMAL	8F-21
GUARD - OPERATION, THERMAL	8F-21
GUARD - REMOVAL, THERMAL	8F-21
GUIDE ASSEMBLY - INSTALLATION, SUNROOF TROUGH	23-88
GUIDE ASSEMBLY - REMOVAL, SUNROOF TROUGH	23-87
GUIDE BAR - INSTALLATION, FRONT DOOR VERTICAL	23-25
GUIDE BAR - REMOVAL, FRONT DOOR VERTICAL	23-25
GUIDE PINS - INSTALLATION, DISC BRAKE CALIPER	5-35
GUIDE PINS - REMOVAL, DISC BRAKE CALIPER	5-34
GUIDES - INSTALLATION, TIMING CHAIN	9-70
GUIDES - REMOVAL, TIMING CHAIN	9-67
HALF SHAFT - DESCRIPTION	3-1
HALF SHAFT - OPERATION	3-2
HALFSHAFT DIAGNOSIS - DIAGNOSIS AND TESTING	3-3
HALFSHAFT, SPECIAL TOOLS	3-12
HANDLE - INSTALLATION, FRONT DOOR OUTSIDE	23-21
HANDLE - INSTALLATION, LIFTGATE OUTSIDE	23-13
HANDLE - INSTALLATION, REAR DOOR OUTSIDE	23-31
HANDLE - REMOVAL, FRONT DOOR OUTSIDE	23-21
HANDLE - REMOVAL, LIFTGATE OUTSIDE	23-13
HANDLE - REMOVAL, REAR DOOR OUTSIDE	23-31
HANDLE ACTUATOR - INSTALLATION, FRONT DOOR INSIDE	23-23
HANDLE ACTUATOR - REMOVAL, FRONT DOOR INSIDE	23-22
HANDLING AIRBAGS - STANDARD PROCEDURE	8O-4
HANDLING TUBING AND FITTINGS - STANDARD PROCEDURE	24-5,24-61
HARNESS - DESCRIPTION, SOLENOIDS AND VACUUM	11-25
HARNESS - DIAGNOSIS AND TESTING, WIRING	8W-01-7
HARNESS - INSTALLATION, SOLENOIDS AND VACUUM	11-26
HARNESS - REMOVAL, SOLENOIDS AND VACUUM	11-25
HEAD - CLEANING, CYLINDER	9-177,9-27,9-98
HEAD - DESCRIPTION, CYLINDER	9-174,9-96
HEAD - INSPECTION, CYLINDER	9-177,9-27, 9-98
HEAD - INSTALLATION, CYLINDER	9-177,9-28, 9-99
HEAD - REMOVAL, CYLINDER	9-175,9-26,9-97
HEAD COVER - CLEANING, CYLINDER	9-31
HEAD COVER - INSPECTION, CYLINDER	9-31
HEAD COVER - INSTALLATION, CYLINDER	9-103,9-182,9-31
HEAD COVER - REMOVAL, CYLINDER	9-103, 9-182,9-31
HEAD GASKET - DIAGNOSIS AND TESTING, CYLINDER	9-174,9-9,9-96
HEAD OFF - INSTALLATION, CYLINDER	9-107, 9-187
HEAD OFF - REMOVAL, CYLINDER	9-107,9-186
HEAD ON - INSTALLATION, CYLINDER	9-107, 9-186
HEAD ON - REMOVAL, CYLINDER	9-107,9-186
HEAD RESTRAINT - INSTALLATION, FRONT SEAT	23-70
HEAD RESTRAINT - REMOVAL, FRONT SEAT	23-70
HEADLAMP - INSTALLATION	8L-11
HEADLAMP - REMOVAL	8L-11
HEADLAMP LEVELING MOTOR - EXPORT - DESCRIPTION	8L-15
HEADLAMP LEVELING MOTOR - EXPORT - DIAGNOSIS AND TESTING	8L-16
HEADLAMP LEVELING MOTOR - EXPORT - INSTALLATION	8L-17
HEADLAMP LEVELING MOTOR - EXPORT - OPERATION	8L-16
HEADLAMP LEVELING MOTOR - EXPORT - REMOVAL	8L-16
HEADLAMP LEVELING SWITCH - EXPORT - DESCRIPTION	8L-17
HEADLAMP LEVELING SWITCH - EXPORT - DIAGNOSIS AND TESTING	8L-17
HEADLAMP LEVELING SWITCH - EXPORT - INSTALLATION	8L-18
HEADLAMP LEVELING SWITCH - EXPORT - OPERATION	8L-17
HEADLAMP LEVELING SWITCH - EXPORT - REMOVAL	8L-17
HEADLAMP SWITCH - DESCRIPTION	8L-18
HEADLAMP SWITCH - OPERATION	8L-18
HEADLAMP UNIT ALIGNMENT - EXPORT - STANDARD PROCEDURE	8L-13
HEADLAMP UNIT ALIGNMENT - STANDARD PROCEDURE	8L-12
HEADLAMPS - DIAGNOSIS AND TESTING	8L-10
HEADLINER - INSTALLATION	23-64
HEADLINER - REMOVAL	23-63
HEAT SHIELDS - DESCRIPTION	11-12
HEAT SHIELDS - INSTALLATION	11-12
HEAT SHIELDS - REMOVAL	11-12
HEAT STAKING - STANDARD PROCEDURE	23-10
HEATED SEAT ELEMENT - DESCRIPTION	8G-5
HEATED SEAT ELEMENT - DIAGNOSIS AND TESTING	8G-6
HEATED SEAT ELEMENT - INSTALLATION	8G-6
HEATED SEAT ELEMENT - OPERATION	8G-6
HEATED SEAT ELEMENT - REMOVAL	8G-6
HEATED SEAT MODULE - DESCRIPTION	8E-3
HEATED SEAT MODULE - DIAGNOSIS AND TESTING	8E-4
HEATED SEAT MODULE - INSTALLATION	8E-5
HEATED SEAT MODULE - OPERATION	8E-4

Description	Group-Page
HEATED SEAT MODULE - REMOVAL	8E-5
HEATED SEAT RELAY - DESCRIPTION	8G-7
HEATED SEAT RELAY - INSTALLATION	8G-8
HEATED SEAT RELAY - OPERATION	8G-7
HEATED SEAT RELAY - REMOVAL	8G-7
HEATED SEAT SENSOR - DESCRIPTION	8G-8
HEATED SEAT SENSOR - DIAGNOSIS AND TESTING	8G-8
HEATED SEAT SENSOR - OPERATION	8G-8
HEATED SEAT SENSOR - REMOVAL	8G-8
HEATED SEAT SWITCH - DESCRIPTION, DRIVER	8G-4
HEATED SEAT SWITCH - DESCRIPTION, PASSENGER	8G-8
HEATED SEAT SWITCH - DIAGNOSIS AND TESTING, DRIVER	8G-4
HEATED SEAT SWITCH - DIAGNOSIS AND TESTING, PASSENGER	8G-9
HEATED SEAT SWITCH - INSTALLATION, DRIVER	8G-5
HEATED SEAT SWITCH - INSTALLATION, PASSENGER	8G-9
HEATED SEAT SWITCH - OPERATION, DRIVER	8G-4
HEATED SEAT SWITCH - OPERATION, PASSENGER	8G-8
HEATED SEAT SWITCH - REMOVAL, DRIVER	8G-5
HEATED SEAT SWITCH - REMOVAL, PASSENGER	8G-9
HEATED SEAT SYSTEM - DESCRIPTION	8G-1
HEATED SEAT SYSTEM - DIAGNOSIS AND TESTING	8G-2
HEATED SEAT SYSTEM - OPERATION	8G-2
HEATED WINDOW DEFOGGER - DESCRIPTION	8G-10
HEATED WINDOW DEFOGGER - OPERATION	8G-10
HEATER - DESCRIPTION, CABIN	24-111,24-55
HEATER - DESCRIPTION, ENGINE BLOCK	7-19, 7-48
HEATER - DIAGNOSIS AND TESTING, DIESEL ENGINE CABIN	24-111,24-56
HEATER - INSTALLATION, ENGINE BLOCK	7-19
HEATER - OPERATION, CABIN	24-111,24-55
HEATER - OPERATION, ENGINE BLOCK	7-19, 7-48
HEATER - REMOVAL, ENGINE BLOCK	7-19
HEATER AND AIR CONDITIONING - DESCRIPTION	24-25,24-81
HEATER CONTROL - DESCRIPTION, A/C	24-13, 24-69
HEATER CONTROL - INSTALLATION, A/C	24-15, 24-71
HEATER CONTROL - REMOVAL, A/C	24-15,24-71
HEATER CORE - DESCRIPTION	24-43
HEATER CORE - EXPORT - DESCRIPTION	24-97
HEATER CORE - EXPORT - INSTALLATION	24-99
HEATER CORE - EXPORT - OPERATION	24-98
HEATER CORE - EXPORT - REMOVAL	24-98
HEATER CORE - INSTALLATION	24-44
HEATER CORE - OPERATION	24-43
HEATER CORE - REMOVAL	24-43
HEATER, DIAGNOSIS AND TESTING - ENGINE BLOCK	7-49
HEATER INLET HOSE - INSTALLATION	24-100, 24-44
HEATER INLET HOSE - REMOVAL	24-100,24-44
HEATER PERFORMANCE TEST - DIAGNOSIS AND TESTING	24-3,24-59
HEATER RETURN HOSE - INSTALLATION	24-101, 24-45
HEATER RETURN HOSE - REMOVAL	24-101, 24-45
HEATER RETURN TUBE - INSTALLATION	7-27
HEATER RETURN TUBE - REMOVAL	7-27
HEATER TESTING - DIAGNOSIS AND TESTING, ENGINE BLOCK	7-19
HEATER UNIT - INSTALLATION	24-112
HEATER UNIT - REMOVAL	24-112
HEIGHT ADJUSTER - INSTALLATION, FRONT SEAT BELT	8O-12
HEIGHT ADJUSTER - REMOVAL, FRONT SEAT BELT	8O-12
HEIGHT MEASUREMENT - STANDARD PROCEDURE, CURB	2-57
HIGH AND LOW LIMITS - DESCRIPTION	25-9
HIGH MOUNTED STOP LAMP - INSTALLATION, CENTER	8L-5
HIGH MOUNTED STOP LAMP - REMOVAL, CENTER	8L-5
HIGH MOUNTED STOP LAMP UNIT - INSTALLATION, CENTER	8L-6
HIGH MOUNTED STOP LAMP UNIT - REMOVAL, CENTER	8L-5
HIGH PRESSURE RELIEF VALVE - INSTALLATION	24-40,24-95
HIGH PRESSURE RELIEF VALVE - REMOVAL	24-40,24-95
HIGH PRESSURE SWITCH - DESCRIPTION, A/C	24-18,24-74
HIGH PRESSURE SWITCH - INSTALLATION, A/C	24-18,24-74
HIGH PRESSURE SWITCH - REMOVAL, A/C	24-18,24-74
HIGH SPEED OPERATION - STANDARD PROCEDURE, TIRE PRESSURE	22-10
HINGE - INSTALLATION, FRONT DOOR	23-22
HINGE - INSTALLATION, HOOD	23-43
HINGE - INSTALLATION, LIFTGATE	23-14
HINGE - INSTALLATION, REAR DOOR	23-31
HINGE - REMOVAL, FRONT DOOR	23-22
HINGE - REMOVAL, HOOD	23-43
HINGE - REMOVAL, LIFTGATE	23-14
HINGE - REMOVAL, REAR DOOR	23-31
HOISTING - STANDARD PROCEDURE	0-14
HOLDDOWN - DESCRIPTION, BATTERY	8F-17
HOLDDOWN - INSTALLATION, BATTERY	8F-17
HOLDDOWN - OPERATION, BATTERY	8F-17
HOLDDOWN - REMOVAL, BATTERY	8F-17
HOLDING CLUTCHES - DESCRIPTION	21-238
HOLDING CLUTCHES - OPERATION	21-238
HOLE REPAIR - DESCRIPTION, THREADED	Intro.-5
HONING - STANDARD PROCEDURE, CYLINDER BORE	9-108,9-187,9-41
HOOD - INSTALLATION	23-43
HOOD - REMOVAL	23-43
HOOD AJAR SWITCH - EXPORT - INSTALLATION	8Q-5
HOOD AJAR SWITCH - EXPORT - REMOVAL	8Q-5
HOOD HINGE - INSTALLATION	23-43
HOOD HINGE - REMOVAL	23-43
HOOD LATCH - INSTALLATION	23-44
HOOD LATCH - REMOVAL	23-44
HOOD LATCH RELEASE CABLE - INSTALLATION	23-45
HOOD LATCH RELEASE CABLE - REMOVAL	23-44
HOOD LATCH STRIKER - INSTALLATION	23-45
HOOD LATCH STRIKER - REMOVAL	23-45
HORN - DIAGNOSIS AND TESTING	8H-3
HORN - INSTALLATION	8H-3
HORN - REMOVAL	8H-3
HORN CHIRP TOGGLE - STANDARD PROCEDURE	8N-6
HORN RELAY - DIAGNOSIS AND TESTING	8H-3
HORN RELAY - INSTALLATION	8H-4
HORN RELAY - REMOVAL	8H-4
HORN SWITCH - DESCRIPTION	8H-4
HORN SWITCH - OPERATION	8H-4
HORN SWITCH - REMOVAL	8H-4
HORN SYSTEM - DESCRIPTION	8H-1
HORN SYSTEM - DIAGNOSIS AND TESTING	8H-1
HORN SYSTEM - OPERATION	8H-1
HOSE - INSTALLATION, HEATER INLET	24-100, 24-44
HOSE - INSTALLATION, HEATER RETURN	24-101, 24-45
HOSE - REMOVAL, HEATER INLET	24-100,24-44
HOSE - REMOVAL, HEATER RETURN	24-101, 24-45
HOSE CLAMPS - DESCRIPTION	7-18,7-52
HOSE CLAMPS - OPERATION	7-52
HOSES - DESCRIPTION, BRAKE TUBES	5-15
HOSES - DESCRIPTION, TRANSMISSION COOLER	7-61
HOSES - INSPECTION, BRAKE TUBES	5-15
HOSES - INSTALLATION, CHARGE AIR COOLER	11-21
HOSES - INSTALLATION, LINES	11-24
HOSES - INSTALLATION, WASHER	8R-17
HOSES - OPERATION, BRAKE TUBES	5-15
HOSES - REMOVAL, CHARGE AIR COOLER	11-19
HOSES - REMOVAL, LINES	11-22
HOSES - REMOVAL, WASHER	8R-17
HOSES AND CLAMP - STANDARD PROCEDURE	14-6
HOUSING - ASSEMBLY, HVAC	24-32,24-86
HOUSING - ASSEMBLY, TRANSAXLE	21-93
HOUSING - DESCRIPTION, OIL FILTER CARTRIDGE	9-60
HOUSING - DISASSEMBLY, HVAC	24-31,24-86
HOUSING - DISASSEMBLY, TRANSAXLE	21-92
HOUSING - INSTALLATION, AIR CLEANER	9-173,9-26,9-96
HOUSING - INSTALLATION, CENTER CONSOLE FLOOD LAMP	8L-29
HOUSING - INSTALLATION, ENGINE COOLANT THERMOSTAT	7-20
HOUSING - INSTALLATION, HVAC	24-32,24-87
HOUSING - INSTALLATION, OIL FILTER CARTRIDGE	9-60
HOUSING - INSTALLATION, THERMOSTAT	7-58
HOUSING - REMOVAL, AIR CLEANER	9-173, 9-25,9-96
HOUSING - REMOVAL, CENTER CONSOLE FLOOD LAMP	8L-29
HOUSING - REMOVAL, ENGINE COOLANT THERMOSTAT	7-20
HOUSING - REMOVAL, HVAC	24-30,24-85
HOUSING - REMOVAL, OIL FILTER CARTRIDGE	9-60
HOUSING - REMOVAL, THERMOSTAT	7-58
HOUSING FLUID LEAKAGE - DIAGNOSIS AND TESTING, TORQUE CONVERTER	21-158
HOW TO USE WIRING DIAGRAMS - DESCRIPTION	8W-01-1
HUB / BEARING - DESCRIPTION	2-39,2-6
HUB / BEARING - INSTALLATION	2-41,2-6
HUB / BEARING - OPERATION	2-39,2-6
HUB / BEARING - REMOVAL	2-40,2-6
HUB - DIAGNOSIS AND TESTING, WHEEL BEARING	2-6
HUB AND BEARING (REAR) - DIAGNOSIS AND TESTING	2-39
HVAC HOUSING - ASSEMBLY	24-32,24-86
HVAC HOUSING - DISASSEMBLY	24-31,24-86
HVAC HOUSING - INSTALLATION	24-32,24-87
HVAC HOUSING - REMOVAL	24-30,24-85
HYDRAULIC CIRCUIT - STANDARD PROCEDURE, BLEEDING CLUTCH	6-6
HYDRAULIC CIRCUITS AND VALVES - OPERATION	5-84
HYDRAULIC CONTROL UNIT (HCU) - DESCRIPTION	5-83
HYDRAULIC LASH ADJUSTER NOISE DIAGNOSIS, DIAGNOSIS AND TESTING	9-105, 9-184
HYDRAULIC PRESSURE TESTS - DIAGNOSIS AND TESTING	21-154
HYDRAULIC SCHEMATICS, SCHEMATICS AND DIAGRAMS - 41TE TRANSAXLE	21-203
HYDROSTATIC LOCKED ENGINE - STANDARD PROCEDURE	9-11,9-158,9-82
ICU - ASSEMBLY	5-92
ICU - DISASSEMBLY	5-92
ICU - INTEGRATED CONTROL UNIT - DESCRIPTION	5-90
ICU - INTEGRATED CONTROL UNIT - INSTALLATION	5-92
ICU - INTEGRATED CONTROL UNIT - OPERATION	5-90
ICU - INTEGRATED CONTROL UNIT - REMOVAL	5-90
IDENTIFICATION - DESCRIPTION, FASTENER	Intro.-2
IDENTIFICATION - DESCRIPTION, VEHICLE	23-1
IDENTIFICATION AND INFORMATION - DESCRIPTION, SECTION	8W-01-6
IDENTIFICATION NUMBER - DESCRIPTION, VEHICLE	Intro.-9
IDLE AIR CONTROL MOTOR - DESCRIPTION	14-37
IDLE AIR CONTROL MOTOR - INSTALLATION	14-37

Description	Group-Page
IDLE AIR CONTROL MOTOR - OPERATION	14-37
IDLE AIR CONTROL MOTOR - REMOVAL	14-37
IDLER PULLEY - INSTALLATION	7-5
IDLER PULLEY - REMOVAL	7-5
IGNITION - DIAGNOSIS AND TESTING, KEY IN	8B-2
IGNITION COIL - DESCRIPTION	8I-6
IGNITION COIL - OPERATION	8I-6
IGNITION COILS, SPECIFICATIONS	8I-3
IGNITION SENSE - PCM INPUT - OPERATION	8E-5
IGNITION SWITCH - INSTALLATION	19-19
IGNITION SWITCH - REMOVAL	19-18
IGNITION SYSTEM - DESCRIPTION	8I-1
IGNITION SYSTEM - OPERATION	8I-1
IGNITION-OFF DRAW TEST - STANDARD PROCEDURE	8F-13
III® STATE DISPLAY TEST MODE, OPERATION - DRB	25-10
ILLUMINATION - INSTALLATION, TRANS RANGE INDICATOR	8L-33
ILLUMINATION - REMOVAL, TRANS RANGE INDICATOR	8L-33
ILLUMINATION LAMPS - INSTALLATION, CLUSTER	8L-32
ILLUMINATION LAMPS - REMOVAL, CLUSTER	8L-31
IMMOBILIZER MODULE - DESCRIPTION, SENTRY KEY	8E-15
IMMOBILIZER MODULE - INSTALLATION, SENTRY KEY	8E-17
IMMOBILIZER MODULE - OPERATION, SENTRY KEY	8E-16
IMMOBILIZER MODULE - REMOVAL, SENTRY KEY	8E-16
IMMOBILIZER SYSTEM - DIAGNOSIS AND TESTING, SENTRY KEY	8Q-2
IMMOBILIZER SYSTEM INITIALIZATION - STANDARD PROCEDURE, SENTRY KEY	8E-16
IMMOBILIZER SYSTEM INITIALIZATION - STANDARD PROCEDURE, SENTRY KEY	8Q-3
IMPACT AIRBAG CONTROL MODULE - DESCRIPTION, SIDE	8O-19
IMPACT AIRBAG CONTROL MODULE - INSTALLATION, SIDE	8O-20
IMPACT AIRBAG CONTROL MODULE - OPERATION, SIDE	8O-19
IMPACT AIRBAG CONTROL MODULE - REMOVAL, SIDE	8O-19
INDICATOR - DIAGNOSIS AND TESTING, BRAKE/PARK BRAKE	8B-2
INDICATOR ILLUMINATION - INSTALLATION, TRANS RANGE	8L-33
INDICATOR ILLUMINATION - REMOVAL, TRANS RANGE	8L-33
INDICATOR LAMP - DESCRIPTION, SKIS	8Q-7
INDICATOR LAMP - OPERATION, SKIS	8Q-7
INDICATORS - DIAGNOSIS AND TESTING, TREAD WEAR	22-9
INFLATION PRESSURES - STANDARD PROCEDURE, TIRE	22-10
INITIAL OPERATION - STANDARD PROCEDURE, POWER STEERING PUMP	19-38
INITIALIZATION - STANDARD PROCEDURE, SENTRY KEY IMMOBILIZER SYSTEM	8E-16
INITIALIZATION - STANDARD PROCEDURE, SENTRY KEY IMMOBILIZER SYSTEM	8Q-3
INJECTION SYSTEM - OPERATION	14-21
INJECTOR - DESCRIPTION, FUEL	14-30
INJECTOR - OPERATION, FUEL	14-30
INJECTOR CONNECTOR - REMOVAL	14-31
INLET AIR TEMPERATURE SENSOR - DESCRIPTION	14-38
INLET AIR TEMPERATURE SENSOR - INSTALLATION	14-38
INLET AIR TEMPERATURE SENSOR - OPERATION	14-38
INLET AIR TEMPERATURE SENSOR - REMOVAL	14-38
INLET FILTER - DESCRIPTION	14-17
INLET HOSE - INSTALLATION, HEATER	24-100, 24-44
INLET HOSE - REMOVAL, HEATER	24-100,24-44
INLET TUBE - INSTALLATION, WATER PUMP	7-60
INLET TUBE - REMOVAL, WATER PUMP	7-60
INNER - INSTALLATION, CV BOOT	3-14
INNER - REMOVAL, CV BOOT	3-13
INNER BELT WEATHERSTRIP - INSTALLATION, FRONT DOOR	23-92
INNER BELT WEATHERSTRIP - INSTALLATION, REAR DOOR	23-93
INNER BELT WEATHERSTRIP - REMOVAL, FRONT DOOR	23-92
INNER BELT WEATHERSTRIP - REMOVAL, REAR DOOR	23-93
INNER CONTROL ASSEMBLY PANEL - INSTALLATION, LIFTGATE	23-15
INNER CONTROL ASSEMBLY PANEL - REMOVAL, LIFTGATE	23-15
INOPERATIVE - DIAGNOSIS AND TESTING, MULTIPLE/INDIVIDUAL GAUGES	8J-3
INPUT - DESCRIPTION, SPEED SENSOR	21-274
INPUT - INSTALLATION, SPEED SENSOR	21-276
INPUT - OPERATION, DATA BUS COMMUNICATION RECEIVE - PCM	8E-5
INPUT - OPERATION, IGNITION SENSE - PCM	8E-5
INPUT - OPERATION, SENSOR RETURN - PCM	8E-5
INPUT - OPERATION, SPEED SENSOR	21-274
INPUT - REMOVAL, SPEED SENSOR	21-275
INPUT BEARING AND SLEEVE - INSTALLATION	21-136
INPUT BEARING AND SLEEVE - REMOVAL	21-136
INPUT CLUTCH ASSEMBLY - ASSEMBLY	21-248
INPUT CLUTCH ASSEMBLY - DISASSEMBLY	21-239
INPUT SHAFT - ASSEMBLY	21-140,21-72
INPUT SHAFT - DESCRIPTION	21-69
INPUT SHAFT - DISASSEMBLY	21-137,21-70
INSIDE HANDLE ACTUATOR - INSTALLATION, FRONT DOOR	23-23
INSIDE HANDLE ACTUATOR - REMOVAL, FRONT DOOR	23-22
INSIDE REAR VIEW MIRROR - INSTALLATION	23-65
INSIDE REAR VIEW MIRROR - REMOVAL	23-65
INSPECT, INSPECTION	21-147
INSPECTION - ASSEMBLY	21-147
INSPECTION - DIAGNOSIS AND TESTING, ENGINE OIL LEAK	9-10,9-157,9-81
INSPECTION - DIAGNOSIS AND TESTING, WHEEL	22-13
INSPECTION - INSPECT	21-147
INSTRUMENT CLUSTER - DESCRIPTION	8J-1
INSTRUMENT CLUSTER - OPERATION	8J-2
INSTRUMENT CLUSTER WARNING/ INDICATOR LAMPS - DIAGNOSIS AND TESTING	8J-3
INSTRUMENT PANEL ASSEMBLY - INSTALLATION	23-53
INSTRUMENT PANEL ASSEMBLY - REMOVAL	23-50
INSTRUMENT PANEL CENTER BEZEL - INSTALLATION	23-56
INSTRUMENT PANEL CENTER BEZEL - REMOVAL	23-56
INSTRUMENT PANEL CENTER BEZEL CONTROL KNOBS - INSTALLATION	23-57
INSTRUMENT PANEL CENTER BEZEL CONTROL KNOBS - REMOVAL	23-56
INSTRUMENT PANEL END CAP - INSTALLATION	23-57
INSTRUMENT PANEL END CAP - REMOVAL	23-57
INSTRUMENT PANEL TOP COVER - INSTALLATION	23-58
INSTRUMENT PANEL TOP COVER - REMOVAL	23-57
INTAKE MANIFOLD - INSTALLATION, LOWER	9-139,9-222,9-63
INTAKE MANIFOLD - INSTALLATION, UPPER	9-138,9-221,9-63
INTAKE MANIFOLD - REMOVAL, LOWER	9-138, 9-220,9-63
INTAKE MANIFOLD - REMOVAL, UPPER	9-135, 9-216,9-63
INTAKE MANIFOLD LEAKS - DIAGNOSIS AND TESTING	9-135,9-216
INTAKE/EXHAUST VALVES & SEATS - CLEANING	9-106,9-185
INTAKE/EXHAUST VALVES & SEATS - DESCRIPTION	9-106,9-185
INTAKE/EXHAUST VALVES & SEATS - OPERATION	9-106,9-185
INTEGRATED CONTROL UNIT - DESCRIPTION, ICU	5-90
INTEGRATED CONTROL UNIT - INSTALLATION, ICU	5-92
INTEGRATED CONTROL UNIT - OPERATION, ICU	5-90
INTEGRATED CONTROL UNIT - REMOVAL, ICU	5-90
INTERACTIVE SPEED CONTROL (4 SPEED EATX ONLY) - OPERATION	8P-2
INTERFACE (PCI) BUS, OPERATION - PROGRAMMABLE COMMUNICATIONS	14-24
INTERIOR LAMPS, SPECIFICATIONS	8L-28
INTERIOR METHOD - REMOVAL	23-78
INTERLOCK CABLE - INSTALLATION, SHIFT	21-267
INTERLOCK CABLE - REMOVAL, SHIFT	21-265
INTERLOCK MECHANISM - INSTALLATION, SHIFT	21-269
INTERLOCK MECHANISM - REMOVAL, SHIFT	21-268
INTERLOCK SYSTEM, ADJUSTMENTS - BRAKE/TRANSMISSION SHIFT	21-270
INTERLOCK/UPSTOP SWITCH - DESCRIPTION, CLUTCH	6-12
INTERLOCK/UPSTOP SWITCH - DIAGNOSIS AND TESTING, CLUTCH	6-13
INTERLOCK/UPSTOP SWITCH - OPERATION, CLUTCH	6-13
INTERMEDIATE PIPE - INSTALLATION	11-8
INTERMEDIATE PIPE - REMOVAL	11-7
INTERNATIONAL SYMBOLS - DESCRIPTION	Intro.-5
INTERNATIONAL SYMBOLS - DESCRIPTION	0-1
INTRODUCTION - DIAGNOSIS AND TESTING	9-3
INTRODUCTION - DIAGNOSIS AND TESTING, ENGINE DIAGNOSIS	9-151,9-76
INTRUSION SENSOR - EXPORT - DESCRIPTION	8Q-5
INTRUSION SENSOR - EXPORT - INSTALLATION	8Q-6
INTRUSION SENSOR - EXPORT - INSTALLATION, DOME LAMP UNIT WITH	8L-31
INTRUSION SENSOR - EXPORT - INSTALLATION, DOME LAMP WITH	8L-30
INTRUSION SENSOR - EXPORT - OPERATION	8Q-5
INTRUSION SENSOR - EXPORT - REMOVAL	8Q-5
INTRUSION SENSOR - EXPORT - REMOVAL, DOME LAMP UNIT WITH	8L-30
INTRUSION SENSOR - EXPORT - REMOVAL, DOME LAMP WITH	8L-30
IOD FUSE - DESCRIPTION	8W-97-4
IOD FUSE - INSTALLATION	8W-97-5
IOD FUSE - OPERATION	8W-97-4
IOD FUSE - REMOVAL	8W-97-5
ISOLATORS - INSTALLATION, SUPPORT BRACKETS	11-11
ISOLATORS - REMOVAL, SUPPORT BRACKETS	11-11
JET - 2.4L TURBO - DESCRIPTION, OIL	9-214
JET - 2.4L TURBO - INSTALLATION, OIL	9-214
JET - 2.4L TURBO - REMOVAL, OIL	9-214
JOINT - DIAGNOSIS AND TESTING, BALL	2-12
JOINT SEAL BOOT - INSTALLATION, LOWER BALL	2-12
JOINT SEAL BOOT - REMOVAL, LOWER BALL	2-12
JOUNCE BUMPER - INSTALLATION	2-41
JOUNCE BUMPER - REMOVAL	2-41
JUMP STARTING - STANDARD PROCEDURE	0-14
KEY - DESCRIPTION, TRANSPONDER	8Q-8
KEY - OPERATION, TRANSPONDER	8Q-8
KEY IMMOBILIZER MODULE - DESCRIPTION, SENTRY	8E-15

Description	Group-Page
KEY IMMOBILIZER MODULE - INSTALLATION, SENTRY	8E-17
KEY IMMOBILIZER MODULE - OPERATION, SENTRY	8E-16
KEY IMMOBILIZER MODULE - REMOVAL, SENTRY	8E-16
KEY IMMOBILIZER SYSTEM - DIAGNOSIS AND TESTING, SENTRY	8Q-2
KEY IMMOBILIZER SYSTEM INITIALIZATION - STANDARD PROCEDURE, SENTRY	8E-16
KEY IMMOBILIZER SYSTEM INITIALIZATION - STANDARD PROCEDURE, SENTRY	8Q-3
KEY IN IGNITION - DIAGNOSIS AND TESTING	8B-2
KEYLESS ENTRY MODULE - DIAGNOSIS AND TESTING, REMOTE	8N-5
KEYLESS ENTRY MODULE - INSTALLATION, REMOTE	8N-5
KEYLESS ENTRY MODULE - REMOVAL, REMOTE	8N-5
KEYLESS ENTRY TRANSMITTER - DESCRIPTION, REMOTE	8N-6
KEYLESS ENTRY TRANSMITTER - DIAGNOSIS AND TESTING, REMOTE	8N-6
KEYLESS ENTRY TRANSMITTER - OPERATION, REMOTE	8N-6
KEY/LOCK CYLINDER - INSTALLATION	19-20
KEY/LOCK CYLINDER - REMOVAL	19-20
KNOB - INSTALLATION, GEAR SHIFT	21-134, 21-66
KNOB - REMOVAL, GEAR SHIFT	21-134,21-66
KNOBS - INSTALLATION, INSTRUMENT PANEL CENTER BEZEL CONTROL	23-57
KNOBS - REMOVAL, INSTRUMENT PANEL CENTER BEZEL CONTROL	23-56
KNOCK SENSOR - DESCRIPTION	8I-11
KNOCK SENSOR - OPERATION	8I-11
KNUCKLE - DESCRIPTION, STEERING	2-6
KNUCKLE - DIAGNOSIS AND TESTING, STEERING	2-6
KNUCKLE - INSTALLATION, STEERING	2-11
KNUCKLE - OPERATION, STEERING	2-6
KNUCKLE - REMOVAL, STEERING	2-6
KNUCKLE (WHEEL BEARING AND HUB) - ASSEMBLY, STEERING	2-10
KNUCKLE (WHEEL BEARING AND HUB) - DISASSEMBLY, STEERING	2-8
LABEL - DESCRIPTION, E-MARK	Intro.-10
LABEL - DESCRIPTION, VECI	Intro.-10
LABEL - DESCRIPTION, VEHICLE EMISSION CONTROL INFORMATION	25-5
LABEL - DESCRIPTION, VEHICLE SAFETY CERTIFICATION	Intro.-10
LACE - INSTALLATION, OPENING TRIM	23-87
LACE - REMOVAL, OPENING TRIM	23-87
LAMP - DESCRIPTION, SKIS INDICATOR	8Q-7
LAMP - DIAGNOSIS AND TESTING, FOG	8L-7
LAMP - DIAGNOSIS AND TESTING, SIDE REPEATER	8L-26
LAMP - EXPORT - DESCRIPTION, FRONT POSITION	8L-9
LAMP - EXPORT - DIAGNOSIS AND TESTING, FRONT POSITION	8L-9
LAMP - EXPORT - INSTALLATION, FRONT POSITION	8L-10
LAMP - EXPORT - INSTALLATION, SIDE REPEATER	8L-26
LAMP - EXPORT - OPERATION, FRONT POSITION	8L-9
LAMP - EXPORT - REMOVAL, FRONT POSITION	8L-10
LAMP - EXPORT - REMOVAL, SIDE REPEATER	8L-26
LAMP - INSTALLATION, BACK-UP	8L-2
LAMP - INSTALLATION, CENTER CONSOLE FLOOD	8L-29
LAMP - INSTALLATION, CENTER HIGH MOUNTED STOP	8L-5
LAMP - INSTALLATION, COURTESY/ READING	8L-30
LAMP - INSTALLATION, DOME	8L-30
LAMP - INSTALLATION, FOG	8L-8
LAMP - INSTALLATION, LICENSE PLATE	8L-18
LAMP - INSTALLATION, PARK/TURN SIGNAL	8L-25
LAMP - INSTALLATION, REAR CARGO	8L-32
LAMP - INSTALLATION, TAIL	8L-26
LAMP - INSTALLATION, VANITY	8L-33
LAMP - OPERATION, SKIS INDICATOR	8Q-7
LAMP - REMOVAL, BACK-UP	8L-2
LAMP - REMOVAL, CENTER CONSOLE FLOOD	8L-29
LAMP - REMOVAL, CENTER HIGH MOUNTED STOP	8L-5
LAMP - REMOVAL, COURTESY/READING	8L-30
LAMP - REMOVAL, DOME	8L-30
LAMP - REMOVAL, FOG	8L-8
LAMP - REMOVAL, LICENSE PLATE	8L-18
LAMP - REMOVAL, PARK/TURN SIGNAL	8L-25
LAMP - REMOVAL, REAR CARGO	8L-32
LAMP - REMOVAL, TAIL	8L-26
LAMP - REMOVAL, VANITY	8L-33
LAMP HOUSING - INSTALLATION, CENTER CONSOLE FLOOD	8L-29
LAMP HOUSING - REMOVAL, CENTER CONSOLE FLOOD	8L-29
LAMP MODULE - DESCRIPTION, DAYTIME RUNNING	8L-7
LAMP MODULE - OPERATION, DAYTIME RUNNING	8L-7
LAMP SWITCH - DESCRIPTION, BRAKE	8L-3
LAMP SWITCH - DIAGNOSIS AND TESTING, BRAKE	8L-4
LAMP SWITCH - EXPORT - DESCRIPTION, REAR FOG	8L-25
LAMP SWITCH - EXPORT - OPERATION, REAR FOG	8L-25
LAMP SWITCH - INSTALLATION, BACK-UP	21-118
LAMP SWITCH - INSTALLATION, BACKUP	21-49
LAMP SWITCH - INSTALLATION, BRAKE	8L-5
LAMP SWITCH - OPERATION, BRAKE	8L-4
LAMP SWITCH - REMOVAL, BACK-UP	21-118
LAMP SWITCH - REMOVAL, BACKUP	21-48
LAMP SWITCH - REMOVAL, BRAKE	8L-4
LAMP UNIT - EXPORT - INSTALLATION, SIDE REPEATER	8L-26
LAMP UNIT - EXPORT - REMOVAL, SIDE REPEATER	8L-26
LAMP UNIT - INSTALLATION, BACK-UP	8L-3
LAMP UNIT - INSTALLATION, CENTER HIGH MOUNTED STOP	8L-6
LAMP UNIT - INSTALLATION, DOME	8L-30
LAMP UNIT - INSTALLATION, FOG	8L-8
LAMP UNIT - INSTALLATION, LICENSE PLATE	8L-19
LAMP UNIT - INSTALLATION, REAR CARGO	8L-32
LAMP UNIT - INSTALLATION, TAIL	8L-27
LAMP UNIT - REMOVAL, BACK-UP	8L-3
LAMP UNIT - REMOVAL, CENTER HIGH MOUNTED STOP	8L-5
LAMP UNIT - REMOVAL, DOME	8L-30
LAMP UNIT - REMOVAL, FOG	8L-8
LAMP UNIT - REMOVAL, LICENSE PLATE	8L-19
LAMP UNIT - REMOVAL, REAR CARGO	8L-32
LAMP UNIT - REMOVAL, TAIL	8L-27
LAMP UNIT ALIGNMENT - STANDARD PROCEDURE, FOG	8L-8
LAMP UNIT WITH INTRUSION SENSOR - EXPORT - INSTALLATION, DOME	8L-31
LAMP UNIT WITH INTRUSION SENSOR - EXPORT - REMOVAL, DOME	8L-30
LAMP WITH INTRUSION SENSOR - EXPORT - INSTALLATION, DOME	8L-30
LAMP WITH INTRUSION SENSOR - EXPORT - REMOVAL, DOME	8L-30
LAMPS - DIAGNOSIS AND TESTING, INSTRUMENT CLUSTER WARNING/ INDICATOR	8J-3
LAMPS - INSTALLATION, CLUSTER ILLUMINATION	8L-32
LAMPS - REMOVAL, CLUSTER ILLUMINATION	8L-31
LAMPS, SPECIFICATIONS - EXTERIOR	8L-2
LAMPS, SPECIFICATIONS - INTERIOR	8L-28
LASH ADJUSTER - DESCRIPTION, ROCKER ARM SHAFT / ROCKER ARM	9-34
LASH ADJUSTER - INSTALLATION, ROCKER ARM SHAFT / ROCKER ARM	9-35
LASH ADJUSTER - REMOVAL, ROCKER ARM SHAFT / ROCKER ARM	9-34
LASH ADJUSTER NOISE DIAGNOSIS - DIAGNOSIS AND TESTING	9-9
LASH ADJUSTER NOISE DIAGNOSIS, DIAGNOSIS AND TESTING - HYDRAULIC	9-105,9-184
LATCH - INSTALLATION, FRONT DOOR	23-23
LATCH - INSTALLATION, GLOVE BOX	23-49
LATCH - INSTALLATION, HOOD	23-44
LATCH - INSTALLATION, LIFTGATE	23-15
LATCH - INSTALLATION, REAR DOOR	23-32
LATCH - REMOVAL, FRONT DOOR	23-23
LATCH - REMOVAL, GLOVE BOX	23-49
LATCH - REMOVAL, HOOD	23-44
LATCH - REMOVAL, LIFTGATE	23-15
LATCH - REMOVAL, REAR DOOR	23-32
LATCH ADJUSTMENT, ADJUSTMENTS - FRONT DOOR	23-24
LATCH ADJUSTMENT, ADJUSTMENTS - REAR DOOR	23-32
LATCH RELEASE CABLE - INSTALLATION, HOOD	23-45
LATCH RELEASE CABLE - REMOVAL, HOOD	23-44
LATCH STRIKER - INSTALLATION	23-15
LATCH STRIKER - INSTALLATION, FRONT DOOR	23-24
LATCH STRIKER - INSTALLATION, HOOD	23-45
LATCH STRIKER - INSTALLATION, REAR DOOR	23-32
LATCH STRIKER - REMOVAL	23-15
LATCH STRIKER - REMOVAL, FRONT DOOR	23-24
LATCH STRIKER - REMOVAL, HOOD	23-45
LATCH STRIKER - REMOVAL, REAR DOOR	23-32
LEAD DIAGNOSIS AND CORRECTION - DIAGNOSIS AND TESTING, VEHICLE	22-10
LEAK CHECKING - STANDARD PROCEDURE, SYSTEM	24-65,24-9
LEAK DETECTION ASSY - INSTALLATION, NATURAL VAC	25-15
LEAK DETECTION ASSY - REMOVAL, NATURAL VAC	25-14
LEAK INSPECTION - DIAGNOSIS AND TESTING, ENGINE OIL	9-10,9-157,9-81
LEAK REPAIRING - STANDARD PROCEDURE, TIRE	22-10
LEAK TESTING - DIAGNOSIS AND TESTING, COOLING SYSTEM	7-14,7-39
LEAKAGE - DIAGNOSIS AND TESTING, TORQUE CONVERTER HOUSING FLUID	21-158
LEAKAGE TEST - DIAGNOSIS AND TESTING, CYLINDER COMBUSTION PRESSURE	9-156,9-80,9-9
LEAKS - DIAGNOSIS AND TESTING, INTAKE MANIFOLD	9-135,9-216
LEAKS - DIAGNOSIS AND TESTING, WATER	23-2
LEARN PROCEDURE - STANDARD PROCEDURE, QUICK	8E-10
LEFT MOUNT - INSTALLATION	9-123,9-202,9-56
LEFT MOUNT - REMOVAL	9-123,9-202,9-56
LEVEL - STANDARD PROCEDURE, SERVICING REFRIGERANT OIL	24-104,24-49
LEVEL AND CONDITION CHECK, STANDARD PROCEDURE - FLUID	21-231
LEVEL CHECK - STANDARD PROCEDURE, REFRIGERANT OIL	24-104,24-49
LEVEL CHECK - STANDARD PROCEDURE, ROUTINE COOLANT	7-17,7-43
LEVEL CHECK, STANDARD PROCEDURE - ENGINE OIL	9-128,9-207
LEVEL CHECKING - STANDARD PROCEDURE, BRAKE FLUID	5-37
LEVEL CHECKING - STANDARD PROCEDURE, FLUID	21-58
LEVEL CHECKING - STANDARD PROCEDURE, POWER STEERING FLUID	19-46
LEVEL SENDING UNIT / SENSOR - DESCRIPTION, FUEL	14-4
LEVEL SENDING UNIT / SENSOR - INSTALLATION, FUEL	14-5
LEVEL SENDING UNIT / SENSOR - OPERATION, FUEL	14-4
LEVEL SENDING UNIT / SENSOR - REMOVAL, FUEL	14-4
LEVEL SERVICING - STANDARD PROCEDURE, COOLANT	7-43

Description	Group-Page
LEVEL SWITCH - INSTALLATION, BRAKE FLUID	5-10
LEVEL SWITCH - REMOVAL, BRAKE FLUID	5-10
LEVEL TEST - STANDARD PROCEDURE, SYSTEM CHARGE	24-5,24-61
LEVELING MOTOR - EXPORT - DESCRIPTION, HEADLAMP	8L-15
LEVELING MOTOR - EXPORT - DIAGNOSIS AND TESTING, HEADLAMP	8L-16
LEVELING MOTOR - EXPORT - INSTALLATION, HEADLAMP	8L-17
LEVELING MOTOR - EXPORT - OPERATION, HEADLAMP	8L-16
LEVELING MOTOR - EXPORT - REMOVAL, HEADLAMP	8L-16
LEVELING SWITCH - EXPORT - DESCRIPTION, HEADLAMP	8L-17
LEVELING SWITCH - EXPORT - DIAGNOSIS AND TESTING, HEADLAMP	8L-17
LEVELING SWITCH - EXPORT - INSTALLATION, HEADLAMP	8L-18
LEVELING SWITCH - EXPORT - OPERATION, HEADLAMP	8L-17
LEVELING SWITCH - EXPORT - REMOVAL, HEADLAMP	8L-17
LEVER - INSTALLATION, SHIFT CROSSOVER	21-145
LEVER - PARKING BRAKE - INSTALLATION	5-69
LEVER - PARKING BRAKE - REMOVAL	5-68
LEVER - REMOVAL, SHIFT CROSSOVER	21-144
LHD - DESCRIPTION, MASTER CYLINDER	6-22
LHD - DIAGNOSIS AND TESTING, POWER MIRROR SWITCH	8N-9
LHD - INSTALLATION	5-48
LHD - INSTALLATION	6-17
LHD - INSTALLATION	14-27
LHD - INSTALLATION, MASTER CYLINDER	6-25
LHD - INSTALLATION, POWER MIRROR SWITCH	8N-9
LHD - OPERATION, MASTER CYLINDER	6-22
LHD - REMOVAL	5-47
LHD - REMOVAL	6-16
LHD - REMOVAL	14-27
LHD - REMOVAL, MASTER CYLINDER	6-22
LHD - REMOVAL, POWER MIRROR SWITCH	8N-9
LHD WITH ABS - INSTALLATION	5-41
LHD WITH ABS - REMOVAL	5-39
LHD WITHOUT ABS - INSTALLATION	5-41
LHD WITHOUT ABS - REMOVAL	5-40
LICENSE PLATE LAMP - INSTALLATION	8L-18
LICENSE PLATE LAMP - REMOVAL	8L-18
LICENSE PLATE LAMP UNIT - INSTALLATION	8L-19
LICENSE PLATE LAMP UNIT - REMOVAL	8L-19
LIFTGATE - INSTALLATION	23-16
LIFTGATE - REMOVAL	23-16
LIFTGATE CHMSL ACCESS PANEL - INSTALLATION	23-13
LIFTGATE CHMSL ACCESS PANEL - REMOVAL	23-13
LIFTGATE CYLINDER LOCK SWITCH - INSTALLATION	8Q-6
LIFTGATE CYLINDER LOCK SWITCH - REMOVAL	8Q-6
LIFTGATE HINGE - INSTALLATION	23-14
LIFTGATE HINGE - REMOVAL	23-14
LIFTGATE INNER CONTROL ASSEMBLY PANEL - INSTALLATION	23-15
LIFTGATE INNER CONTROL ASSEMBLY PANEL - REMOVAL	23-15
LIFTGATE LATCH - INSTALLATION	23-15
LIFTGATE LATCH - REMOVAL	23-15
LIFTGATE LOCK CYLINDER - INSTALLATION	23-17
LIFTGATE LOCK CYLINDER - REMOVAL	23-17
LIFTGATE LOCK MOTOR - INSTALLATION	8N-5
LIFTGATE LOCK MOTOR - REMOVAL	8N-5
LIFTGATE OUTSIDE HANDLE - INSTALLATION	23-13
LIFTGATE OUTSIDE HANDLE - REMOVAL	23-13
LIFTGATE SUPPORT ROD - INSTALLATION	23-17
LIFTGATE SUPPORT ROD - REMOVAL	23-17
LIFTGATE TRIM PANEL - INSTALLATION	23-18
LIFTGATE TRIM PANEL - REMOVAL	23-18
LIFTGATE WEATHERSTRIP - INSTALLATION	23-92
LIFTGATE WEATHERSTRIP - REMOVAL	23-92
LIGHTER/POWER OUTLET - DESCRIPTION, CIGAR	8W-97-1
LIGHTER/POWER OUTLET - INSTALLATION, CIGAR	8W-97-3
LIGHTER/POWER OUTLET - OPERATION, CIGAR	8W-97-2
LIGHTER/POWER OUTLET - REMOVAL, CIGAR	8W-97-3
LIMITS - DESCRIPTION, HIGH AND LOW	25-9
LIMITS/SPECIFICATIONS, SPECIFICATIONS - BRAKE ROTOR	5-57
LINE - DESCRIPTION, DISCHARGE	24-37,24-92
LINE - DESCRIPTION, LIQUID	24-102,24-46
LINE - DESCRIPTION, SUCTION	24-105,24-50
LINE - INSTALLATION, A/C DISCHARGE	24-37, 24-93
LINE - INSTALLATION, LIQUID	24-102,24-47
LINE - INSTALLATION, SUCTION	24-108,24-52
LINE - OPERATION, SUCTION	24-106,24-51
LINE - REMOVAL, A/C DISCHARGE	24-37,24-92
LINE - REMOVAL, LIQUID	24-102,24-46
LINE - REMOVAL, SUCTION	24-107,24-51
LINE AND TERMINAL REPAIR, STANDARD PROCEDURE - GRID	8G-13
LINE ASSEMBLY - INSTALLATION, SUCTION AND LIQUID	24-109,24-53
LINE ASSEMBLY - REMOVAL, SUCTION AND LIQUID	24-109,24-53
LINES - 2.4L TURBO - DESCRIPTION, OIL COOLER	9-215
LINES - 2.4L TURBO - INSTALLATION, OIL COOLER	9-215
LINES - 2.4L TURBO - REMOVAL, OIL COOLER	9-215
LINES AND HOSES - INSTALLATION	11-24
LINES AND HOSES - REMOVAL	11-22
LINES, DIAGNOSIS AND TESTING - GRID	8G-12
LINES, STANDARD PROCEDURE - REAR WINDOW DEFOGGER GRID	8G-13
LINES/HOSES AND CLAMPS - DESCRIPTION, FUEL	14-5
LINK - INSTALLATION, STABILIZER BAR	2-48
LINK - INSTALLATION, WATTS	2-51
LINK - REMOVAL, STABILIZER BAR	2-48
LINK - REMOVAL, WATTS	2-51
LINK ASSEMBLY - DESCRIPTION, WATTS	2-48
LINK ASSEMBLY - DIAGNOSIS AND TESTING, WATTS	2-49
LINK ASSEMBLY - OPERATION, WATTS	2-49
LINK CONNECTOR - DESCRIPTION, DATA	8E-3
LINK CONNECTOR - OPERATION, DATA	8E-3
LIQUID LINE - DESCRIPTION	24-102,24-46
LIQUID LINE - INSTALLATION	24-102,24-47
LIQUID LINE - REMOVAL	24-102,24-46
LIQUID LINE ASSEMBLY - INSTALLATION, SUCTION	24-109,24-53
LIQUID LINE ASSEMBLY - REMOVAL, SUCTION	24-109,24-53
LOADS - STANDARD PROCEDURE, TESTING FOR A SHORT TO GROUND ON FUSES POWERING SEVERAL	8W-01-9
LOCATION - DESCRIPTION, CONNECTOR/ GROUND/SPLICE	8W-91-1
LOCATIONS - DESCRIPTION, FLUID FILL/CHECK	0-5
LOCATIONS - SPECIFICATIONS, BODY SEALING	23-99
LOCATIONS - SPECIFICATIONS, WELD	23-119
LOCK CYLINDER - INSTALLATION, FRONT DOOR	23-25
LOCK CYLINDER - INSTALLATION, GLOVE BOX	23-50
LOCK CYLINDER - INSTALLATION, LIFTGATE	23-17
LOCK CYLINDER - REMOVAL, FRONT DOOR	23-25
LOCK CYLINDER - REMOVAL, GLOVE BOX	23-49
LOCK CYLINDER - REMOVAL, LIFTGATE	23-17
LOCK MOTOR - DESCRIPTION, DOOR	8N-4
LOCK MOTOR - DIAGNOSIS AND TESTING, DOOR	8N-4
LOCK MOTOR - INSTALLATION, LIFTGATE	8N-5
LOCK MOTOR - OPERATION, DOOR	8N-4
LOCK MOTOR - REMOVAL, LIFTGATE	8N-5
LOCK SWITCH - DIAGNOSIS AND TESTING, DOOR	8N-3
LOCK SWITCH - INSTALLATION, DOOR	8N-4
LOCK SWITCH - INSTALLATION, DOOR CYLINDER	8Q-4
LOCK SWITCH - INSTALLATION, LIFTGATE CYLINDER	8Q-6
LOCK SWITCH - REMOVAL, DOOR	8N-4
LOCK SWITCH - REMOVAL, DOOR CYLINDER	8Q-4
LOCK SWITCH - REMOVAL, LIFTGATE CYLINDER	8Q-6
LOCKED ENGINE - STANDARD PROCEDURE, HYDROSTATIC	9-11,9-158,9-82
LOCKOUT - STANDARD PROCEDURE, PARKING BRAKE AUTOMATIC ADJUSTER	5-62
LOCKS - DESCRIPTION, POWER	8N-1
LOCKS - DIAGNOSIS AND TESTING, POWER	8N-3
LOCKS - OPERATION, POWER	8N-2
LOCKS - STANDARD PROCEDURE, ROLLING DOOR	8N-3
LOW LIMITS - DESCRIPTION, HIGH	25-9
LOW PRESSURE CLUTCH CYCLING SWITCH - DIAGNOSIS AND TESTING, A/C	24-19,24-75
LOW PRESSURE SWITCH - DESCRIPTION, A/C	24-19,24-75
LOW PRESSURE SWITCH - INSTALLATION, A/C	24-19,24-75
LOW PRESSURE SWITCH - OPERATION, A/C	24-19,24-75
LOW PRESSURE SWITCH - REMOVAL, A/C	24-19,24-75
LOWER - DESCRIPTION, STEERING COUPLING	19-21
LOWER - INSTALLATION	9-125,9-205
LOWER - INSTALLATION, STEERING COUPLING	19-25
LOWER - OPERATION, STEERING COUPLING	19-21
LOWER - REMOVAL	9-125,9-204
LOWER - REMOVAL, STEERING COUPLING	19-22
LOWER BALL JOINT SEAL BOOT - INSTALLATION	2-12
LOWER BALL JOINT SEAL BOOT - REMOVAL	2-12
LOWER CONTROL ARM - DESCRIPTION	2-13
LOWER CONTROL ARM - DIAGNOSIS AND TESTING	2-13
LOWER CONTROL ARM - INSTALLATION	2-17
LOWER CONTROL ARM - OPERATION	2-13
LOWER CONTROL ARM - REMOVAL	2-13
LOWER CONTROL ARM (BALL JOINT) - ASSEMBLY	2-16
LOWER CONTROL ARM (BALL JOINT) - DISASSEMBLY	2-15
LOWER CONTROL ARM (REAR ISOLATOR BUSHING) - ASSEMBLY	2-17
LOWER CONTROL ARM (REAR ISOLATOR BUSHING) - DISASSEMBLY	2-15
LOWER COUPLING - DIAGNOSIS AND TESTING, STEERING COLUMN	19-22
LOWER INTAKE MANIFOLD - INSTALLATION	9-139,9-222,9-63
LOWER INTAKE MANIFOLD - REMOVAL	9-138, 9-220,9-63
LOWER QUARTER TRIM PANEL - INSTALLATION	23-64
LOWER QUARTER TRIM PANEL - REMOVAL	23-64
LUBRICANTS - DESCRIPTION, ENGINE OIL	0-1
LUBRICATION - DESCRIPTION	9-126,9-206,9-57
LUBRICATION - OPERATION	9-126,9-206,9-57
LUBRICATION - STANDARD PROCEDURE	2-2
LUBRICATION POINTS - DESCRIPTION	0-5
LUBRICATION, SPECIFICATIONS - BODY	23-10
LUGGAGE RACK CROSSBAR - INSTALLATION	23-39
LUGGAGE RACK CROSSBAR - REMOVAL	23-39

Description	Group-Page
LUGGAGE RACK SIDE RAIL - INSTALLATION	23-39
LUGGAGE RACK SIDE RAIL - REMOVAL	23-39
LUMBAR - DESCRIPTION	8N-16
LUMBAR - INSTALLATION	8N-16
LUMBAR - OPERATION	8N-16
LUMBAR - REMOVAL	8N-16
MACHINING - STANDARD PROCEDURE, BRAKE DRUM	5-35
MACHINING - STANDARD PROCEDURE, BRAKE ROTOR	5-55
MAIN BEARINGS - DESCRIPTION, CRANKSHAFT	9-44
MAINTENANCE SCHEDULES - DESCRIPTION	0-5
MANAGER - DESCRIPTION, TASK	25-22
MANAGER - OPERATION, TASK	25-22
MANIFOLD - CLEANING, EXHAUST	9-140,9-224, 9-64
MANIFOLD - INSPECTION, EXHAUST	9-140, 9-224,9-64
MANIFOLD - INSTALLATION, EXHAUST	9-141, 9-224,9-64
MANIFOLD - INSTALLATION, LOWER INTAKE	9-139,9-222,9-63
MANIFOLD - INSTALLATION, UPPER INTAKE	9-138,9-221,9-63
MANIFOLD - REMOVAL, EXHAUST	9-140,9-223, 9-64
MANIFOLD - REMOVAL, LOWER INTAKE	9-138, 9-220,9-63
MANIFOLD - REMOVAL, UPPER INTAKE	9-135, 9-216,9-63
MANIFOLD LEAKS - DIAGNOSIS AND TESTING, INTAKE	9-135,9-216
MANUAL TRANSAXLE - ASSEMBLY, T350	21-108
MANUAL TRANSAXLE - CLEANING, T350	21-108
MANUAL TRANSAXLE - DESCRIPTION, G288	21-2
MANUAL TRANSAXLE - DESCRIPTION, T350	21-95
MANUAL TRANSAXLE - DISASSEMBLY, T350	21-101
MANUAL TRANSAXLE - INSPECTION, T350	21-108
MANUAL TRANSAXLE - INSTALLATION, PEDAL - WITH	5-44
MANUAL TRANSAXLE - INSTALLATION, T350	21-114
MANUAL TRANSAXLE - OPERATION, G288	21-5
MANUAL TRANSAXLE - REMOVAL, PEDAL - WITH	5-44
MANUAL TRANSAXLE - REMOVAL, T350	21-97
MANUAL TRANSAXLE - SPECIAL TOOLS, T350	21-116
MANUAL TRANSAXLE - SPECIFICATIONS, T350	21-115
MANUFACTURER PLATE - DESCRIPTION	Intro.-10
MAP SENSOR - DESCRIPTION	14-39
MAP SENSOR - OPERATION	14-39
MASK/LENS - INSTALLATION, CLUSTER	8J-5
MASK/LENS - REMOVAL, CLUSTER	8J-5
MASTER CYLINDER - DESCRIPTION	5-38
MASTER CYLINDER - LHD - DESCRIPTION	6-22
MASTER CYLINDER - LHD - INSTALLATION	6-25
MASTER CYLINDER - LHD - OPERATION	6-22
MASTER CYLINDER - LHD - REMOVAL	6-22
MASTER CYLINDER - OPERATION	5-38
MASTER CYLINDER - RHD - DESCRIPTION	6-26
MASTER CYLINDER - RHD - INSTALLATION	6-29
MASTER CYLINDER - RHD - OPERATION	6-26
MASTER CYLINDER - RHD - REMOVAL	6-26
MASTER CYLINDER BLEEDING - STANDARD PROCEDURE	5-38
MATCH MOUNTING - STANDARD PROCEDURE, TIRE AND WHEEL	22-4
MEASUREMENT - STANDARD PROCEDURE, CURB HEIGHT	2-57
MEASUREMENT AND ADJUSTMENT, ADJUSTMENTS - DIFFERENTIAL BEARING PRELOAD	21-229
MEASUREMENTS - SPECIFICATIONS, BODY GAP AND FLUSH	23-95
MEASURING BEARING CLEARANCE USING PLASTIGAGE - STANDARD PROCEDURE	9-13,9-160,9-84
MEASURING CAMSHAFT END PLAY - STANDARD PROCEDURE	9-101,9-180
MEASURING CRANKSHAFT END PLAY - STANDARD PROCEDURE	9-189
MECHANICAL - DIAGNOSIS AND TESTING, ENGINE	9-6
MECHANICAL - DIAGNOSIS AND TESTING, ENGINE DIAGNOSIS	9-154,9-78
MECHANISM - INSTALLATION, GEAR SHIFT	21-134,21-68
MECHANISM - INSTALLATION, SHIFT INTERLOCK	21-269
MECHANISM - REMOVAL, GEAR SHIFT	21-134, 21-67
MECHANISM - REMOVAL, SHIFT INTERLOCK	21-268
MEMORIES, OPERATION - FUEL CORRECTION OR ADAPTIVE	14-23
METHOD - REMOVAL, EXTERIOR	23-78
METHOD - REMOVAL, INTERIOR	23-78
METRIC SYSTEM - DESCRIPTION	Intro.-6
MICRO 420 BATTERY TESTER - STANDARD PROCEDURE, USING	8F-11
MICRO-RELAY - DIAGNOSIS AND TESTING	8G-7
MIRROR - INSTALLATION, INSIDE REAR VIEW	23-65
MIRROR - INSTALLATION, SIDE VIEW	23-40
MIRROR - REMOVAL, INSIDE REAR VIEW	23-65
MIRROR - REMOVAL, SIDE VIEW	23-40
MIRROR GLASS - INSTALLATION, SIDE VIEW	23-41
MIRROR GLASS - REMOVAL, SIDE VIEW	23-41
MIRROR SWITCH - LHD - DIAGNOSIS AND TESTING, POWER	8N-9
MIRROR SWITCH - LHD - INSTALLATION, POWER	8N-9
MIRROR SWITCH - LHD - REMOVAL, POWER	8N-9
MIRROR SWITCH - RHD - DIAGNOSIS AND TESTING, POWER FOLDAWAY	8N-10
MIRROR SWITCH - RHD - INSTALLATION, POWER FOLDAWAY	8N-11
MIRROR SWITCH - RHD - REMOVAL, POWER FOLDAWAY	8N-11
MIRROR TRIM BEZEL - INSTALLATION, SIDE VIEW	23-25
MIRROR TRIM BEZEL - REMOVAL, SIDE VIEW	23-25
MIRRORS - DESCRIPTION, POWER	8N-8
MIRRORS - DIAGNOSIS AND TESTING, POWER	8N-8
MIRRORS - OPERATION, POWER	8N-8
MISALIGNMENT - DIAGNOSIS AND TESTING, DRIVE PLATE	6-6
MODE DOOR CABLE - INSTALLATION	24-22, 24-78
MODE DOOR CABLE - REMOVAL	24-22,24-77
MODE, OPERATION - DRB III® STATE DISPLAY TEST	25-10
MODELS - INSTALLATION, DIESEL AND TURBO	6-34
MODELS - INSTALLATION, DIESEL AND TURBO	3-10
MODELS - INSTALLATION, EXCEPT DIESEL AND TURBO	3-8
MODELS - REMOVAL, DIESEL AND TURBO	6-34
MODELS - REMOVAL, DIESEL AND TURBO	3-6
MODELS - REMOVAL, EXCEPT DIESEL AND TURBO	3-4
MODELS (EXCEPT DIESEL AND TURBO) - INSTALLATION, 1.6/2.0/2.4L	6-34
MODES OF OPERATION - OPERATION	14-21
MODULAR CLUTCH - DESCRIPTION	6-30
MODULAR CLUTCH - INSPECTION	6-31
MODULAR CLUTCH - INSTALLATION	6-32
MODULAR CLUTCH - OPERATION	6-30
MODULAR CLUTCH - REMOVAL	6-31
MODULE - DESCRIPTION, DAYTIME RUNNING LAMP	8L-7
MODULE - DESCRIPTION, FUEL PUMP	14-7
MODULE - DESCRIPTION, HEATED SEAT	8E-3
MODULE - DESCRIPTION, SATELLITE RECEIVER	8A-11
MODULE - DESCRIPTION, SENTRY KEY IMMOBILIZER	8E-15
MODULE - DESCRIPTION, SIDE IMPACT AIRBAG CONTROL	8O-19
MODULE - DESCRIPTION, TRANSMISSION CONTROL	8E-17
MODULE - DIAGNOSIS AND TESTING, HEATED SEAT	8E-4
MODULE - DIAGNOSIS AND TESTING, REMOTE KEYLESS ENTRY	8N-5
MODULE - INSTALLATION, ELECTRONIC CONTROL	23-84
MODULE - INSTALLATION, FRONT WIPER	8R-9
MODULE - INSTALLATION, FUEL PUMP	14-8
MODULE - INSTALLATION, HEATED SEAT	8E-5
MODULE - INSTALLATION, REMOTE KEYLESS ENTRY	8N-5
MODULE - INSTALLATION, SATELLITE RECEIVER	8A-11
MODULE - INSTALLATION, SENTRY KEY IMMOBILIZER	8E-17
MODULE - INSTALLATION, SIDE IMPACT AIRBAG CONTROL	8O-20
MODULE - INSTALLATION, TRANSMISSION CONTROL	8E-20
MODULE - OPERATION, DAYTIME RUNNING LAMP	8L-7
MODULE - OPERATION, FUEL PUMP	14-7
MODULE - OPERATION, HEATED SEAT	8E-4
MODULE - OPERATION, SATELLITE RECEIVER	8A-11
MODULE - OPERATION, SENTRY KEY IMMOBILIZER	8E-16
MODULE - OPERATION, SIDE IMPACT AIRBAG CONTROL	8O-19
MODULE - OPERATION, TRANSMISSION CONTROL	8E-17
MODULE - REMOVAL, ELECTRONIC CONTROL	23-84
MODULE - REMOVAL, FRONT WIPER	8R-9
MODULE - REMOVAL, FUEL PUMP	14-8
MODULE - REMOVAL, HEATED SEAT	8E-5
MODULE - REMOVAL, REMOTE KEYLESS ENTRY	8N-5
MODULE - REMOVAL, SATELLITE RECEIVER	8A-11
MODULE - REMOVAL, SENTRY KEY IMMOBILIZER	8E-16
MODULE - REMOVAL, SIDE IMPACT AIRBAG CONTROL	8O-19
MODULE - REMOVAL, TRANSMISSION CONTROL	8E-20
MODULE - RHD - INSTALLATION, FRONT WIPER	8R-10
MODULE - RHD - REMOVAL, FRONT WIPER	8R-10
MODULE - STANDARD PROCEDURE, RKE/VTSS CONFIGURING A NEW	8Q-3
MODULE ASSEMBLY - INSTALLATION, SUNROOF	23-83
MODULE ASSEMBLY - REMOVAL, SUNROOF	23-83
MOLDINGS - INSTALLATION, BODY SIDE	23-41
MOLDINGS - REMOVAL, BODY SIDE	23-41
MONITORED COMPONENT - DESCRIPTION	25-1
MONITORED SYSTEMS - DESCRIPTION	25-6
MOTOR - DESCRIPTION, DOOR LOCK	8N-4
MOTOR - DESCRIPTION, IDLE AIR CONTROL	14-37
MOTOR - DIAGNOSIS AND TESTING, BLOWER	24-28,24-83
MOTOR - DIAGNOSIS AND TESTING, DOOR LOCK	8N-4
MOTOR - DIAGNOSIS AND TESTING, WIPER	8R-10
MOTOR - EXPORT - DESCRIPTION, HEADLAMP LEVELING	8L-15
MOTOR - EXPORT - DIAGNOSIS AND TESTING, HEADLAMP LEVELING	8L-16
MOTOR - EXPORT - INSTALLATION, HEADLAMP LEVELING	8L-17
MOTOR - EXPORT - OPERATION, HEADLAMP LEVELING	8L-16

Description	Group-Page
MOTOR - EXPORT - REMOVAL, HEADLAMP LEVELING	8L-16
MOTOR - INSTALLATION, BLOWER	24-30,24-85
MOTOR - INSTALLATION, FRONT WIPER	8R-12
MOTOR - INSTALLATION, IDLE AIR CONTROL	14-37
MOTOR - INSTALLATION, LIFTGATE LOCK	8N-5
MOTOR - INSTALLATION, REAR WIPER	8R-16
MOTOR - INSTALLATION, SUNROOF DRIVE	23-85
MOTOR - INSTALLATION, WASHER PUMP	8R-18
MOTOR - INSTALLATION, WINDOW	8N-19
MOTOR - OPERATION, BLOWER	24-28,24-83
MOTOR - OPERATION, DOOR LOCK	8N-4
MOTOR - OPERATION, IDLE AIR CONTROL	14-37
MOTOR - REMOVAL, BLOWER	24-28,24-83
MOTOR - REMOVAL, FRONT WIPER	8R-12
MOTOR - REMOVAL, IDLE AIR CONTROL	14-37
MOTOR - REMOVAL, LIFTGATE LOCK	8N-5
MOTOR - REMOVAL, REAR WIPER	8R-15
MOTOR - REMOVAL, SUNROOF DRIVE	23-84
MOTOR - REMOVAL, WASHER PUMP	8R-17
MOTOR - REMOVAL, WINDOW	8N-19
MOTOR - RHD - INSTALLATION, FRONT WIPER	8R-13
MOTOR - RHD - INSTALLATION, WASHER PUMP	8R-18
MOTOR - RHD - REMOVAL, FRONT WIPER	8R-12
MOTOR - RHD - REMOVAL, WASHER PUMP	8R-18
MOTOR RESISTOR BLOCK - DESCRIPTION, BLOWER	24-21,24-76
MOTOR RESISTOR BLOCK - INSTALLATION, BLOWER	24-21,24-77
MOTOR RESISTOR BLOCK - REMOVAL, BLOWER	24-21,24-76
MOTOR, SPECIFICATIONS - STARTER	8F-39
MOTOR TEST, DIAGNOSIS AND TESTING - RADIATOR FAN	7-54
MOTOR WHEEL - DESCRIPTION, BLOWER	24-28,24-83
MOUNT - INSTALLATION, LEFT	9-123,9-202,9-56
MOUNT - INSTALLATION, RIGHT	9-123,9-203, 9-55
MOUNT - REMOVAL, LEFT	9-123,9-202,9-56
MOUNT - REMOVAL, RIGHT	9-123,9-203,9-55
MOUNT BRACKET - INSTALLATION, RIGHT ENGINE	9-55
MOUNT BRACKET - REMOVAL, RIGHT ENGINE	9-54
MOUNTED STOP LAMP - INSTALLATION, CENTER HIGH	8L-5
MOUNTED STOP LAMP - REMOVAL, CENTER HIGH	8L-5
MOUNTED STOP LAMP UNIT - INSTALLATION, CENTER HIGH	8L-6
MOUNTED STOP LAMP UNIT - REMOVAL, CENTER HIGH	8L-5
MOUNTING - DESCRIPTION, ENGINE	9-122, 9-202,9-52
MOUNTING - OPERATION, ENGINE	9-122,9-202
MOUNTING - STANDARD PROCEDURE, TIRE AND WHEEL MATCH	22-4
MOUNTING STUDS - FRONT - INSTALLATION, WHEEL	22-15
MOUNTING STUDS - FRONT - REMOVAL, WHEEL	22-14
MOUNTING STUDS - REAR - INSTALLATION, WHEEL	22-16
MOUNTING STUDS - REAR - REMOVAL, WHEEL	22-16
MUFFLER - INSTALLATION	11-6
MUFFLER - REMOVAL	11-6
MULTI-FUNCTION SWITCH - DESCRIPTION	8L-19
MULTI-FUNCTION SWITCH - DIAGNOSIS AND TESTING	8L-20
MULTI-FUNCTION SWITCH - INSTALLATION	8L-24
MULTI-FUNCTION SWITCH - OPERATION	8L-20
MULTI-FUNCTION SWITCH - REMOVAL	8L-24
MULTIPLE/INDIVIDUAL GAUGES INOPERATIVE - DIAGNOSIS AND TESTING	8J-3
NATURAL VAC LEAK DETECTION ASSY - INSTALLATION	25-15
NATURAL VAC LEAK DETECTION ASSY - REMOVAL	25-14
NEW MODULE - STANDARD PROCEDURE, RKE/VTSS CONFIGURING A	8Q-3
NOISE - DIAGNOSIS AND TESTING, COMPRESSOR	24-33,24-88
NOISE - DIAGNOSIS AND TESTING, WIND	23-3
NOISE DIAGNOSIS - DIAGNOSIS AND TESTING, LASH ADJUSTER	9-9
NOISE DIAGNOSIS, DIAGNOSIS AND TESTING - HYDRAULIC LASH ADJUSTER	9-105,9-184
NOISE OR VIBRATION - DIAGNOSIS AND TESTING, TIRE	22-9
NOISE SUPPRESSION COMPONENTS - DESCRIPTION, RADIO	8A-8
NOISE SUPPRESSION COMPONENTS - INSTALLATION, RADIO	8A-11
NOISE SUPPRESSION COMPONENTS - OPERATION, RADIO	8A-8
NOISE SUPPRESSION COMPONENTS - REMOVAL, RADIO	8A-9
NON-MONITORED CIRCUITS - OPERATION	25-5
NON-TURBO ENGINES - INSTALLATION	19-47
NON-TURBO ENGINES - REMOVAL	19-47
NOT FILL - DIAGNOSIS AND TESTING, VEHICLE DOES	25-17
NOZZLE - INSTALLATION, FRONT WASHER	8R-6
NOZZLE - INSTALLATION, REAR WASHER	8R-14
NOZZLE - REMOVAL, FRONT WASHER	8R-6
NOZZLE - REMOVAL, REAR WASHER	8R-14
NUMBER - DESCRIPTION, VEHICLE IDENTIFICATION	Intro.-9
O2 SENSOR - DESCRIPTION	14-40
O2 SENSOR - OPERATION	14-40
OBTAINING DIAGNOSTIC TROUBLE CODES - STANDARD PROCEDURE	8E-10
OCCUPANT RESTRAINT CONTROLLER - DESCRIPTION	8O-12
OCCUPANT RESTRAINT CONTROLLER - INSTALLATION	8O-13
OCCUPANT RESTRAINT CONTROLLER - OPERATION	8O-12
OCCUPANT RESTRAINT CONTROLLER - REMOVAL	8O-13
OFF - INSTALLATION, CYLINDER HEAD	9-107, 9-187
OFF - REMOVAL, CYLINDER HEAD	9-107,9-186
OIL - DESCRIPTION, REFRIGERANT	24-104, 24-48
OIL - OPERATION, REFRIGERANT	24-104,24-48
OIL AND FILTER CHANGE - STANDARD PROCEDURE, ENGINE	9-129,9-207
OIL AND LUBRICANTS - DESCRIPTION, ENGINE	0-1
OIL COOLER - CLEANING, AUTOMATIC TRANSMISSION	7-62
OIL COOLER - DESCRIPTION, AUTOMATIC TRANSMISSION	7-61
OIL COOLER - INSPECTION, AUTOMATIC TRANSMISSION	7-63
OIL COOLER - INSTALLATION, AUTOMATIC TRANSMISSION	7-63
OIL COOLER & LINES - 2.4L TURBO - DESCRIPTION	9-215
OIL COOLER & LINES - 2.4L TURBO - INSTALLATION	9-215
OIL COOLER & LINES - 2.4L TURBO - REMOVAL	9-215
OIL COOLER - REMOVAL, AUTOMATIC TRANSMISSION	7-61
OIL FEED TROUGH - INSTALLATION, REAR BEARING	21-144
OIL FEED TROUGH - REMOVAL, REAR BEARING	21-144
OIL FILTER - INSTALLATION	9-129,9-209
OIL FILTER - REMOVAL	9-129,9-209
OIL FILTER ADAPTER - INSTALLATION	9-130, 9-209
OIL FILTER ADAPTER - REMOVAL	9-130,9-209
OIL FILTER CARTRIDGE - INSTALLATION	9-59
OIL FILTER CARTRIDGE - REMOVAL	9-59
OIL FILTER CARTRIDGE HOUSING - DESCRIPTION	9-60
OIL FILTER CARTRIDGE HOUSING - INSTALLATION	9-60
OIL FILTER CARTRIDGE HOUSING - REMOVAL	9-60
OIL GALLERY PLUGS - STANDARD PROCEDURE, ENGINE CORE	9-13,9-160,9-84
OIL JET - 2.4L TURBO - DESCRIPTION	9-214
OIL JET - 2.4L TURBO - INSTALLATION	9-214
OIL JET - 2.4L TURBO - REMOVAL	9-214
OIL LEAK INSPECTION - DIAGNOSIS AND TESTING, ENGINE	9-10,9-157,9-81
OIL LEVEL - STANDARD PROCEDURE, SERVICING REFRIGERANT	24-104,24-49
OIL LEVEL CHECK - STANDARD PROCEDURE, REFRIGERANT	24-104,24-49
OIL LEVEL CHECK, STANDARD PROCEDURE - ENGINE	9-128,9-207
OIL PAN - INSTALLATION	9-130,9-210,9-61
OIL PAN - REMOVAL	9-130,9-210,9-60
OIL PRESSURE - DIAGNOSIS AND TESTING, CHECKING ENGINE	9-126,9-206,9-57
OIL PRESSURE SENSOR/SWITCH - DESCRIPTION	9-210
OIL PRESSURE SENSOR/SWITCH - INSTALLATION	9-131,9-211
OIL PRESSURE SENSOR/SWITCH - OPERATION	9-211
OIL PRESSURE SENSOR/SWITCH - REMOVAL	9-131,9-211
OIL PUMP - ASSEMBLY	9-134,9-212
OIL PUMP - ASSEMBLY	21-264
OIL PUMP - CLEANING	9-211
OIL PUMP - DESCRIPTION	21-263
OIL PUMP - DISASSEMBLY	9-132,9-211
OIL PUMP - DISASSEMBLY	21-263
OIL PUMP - INSPECTION	9-132,9-212
OIL PUMP - INSTALLATION	9-134,9-213,9-62
OIL PUMP - INSTALLATION, SEAL	21-265
OIL PUMP - OPERATION	21-263
OIL PUMP - REMOVAL	9-131,9-211,9-62
OIL PUMP - REMOVAL, SEAL	21-265
OIL PUMP PICK-UP - INSTALLATION	9-62
OIL PUMP PICK-UP - REMOVAL	9-62
OIL SEAL - FRONT - INSTALLATION, CRANKSHAFT	9-114,9-192,9-47
OIL SEAL - FRONT - REMOVAL, CRANKSHAFT	9-114,9-192,9-47
OIL SEAL - REAR - INSTALLATION, CRANKSHAFT	9-115,9-193,9-47
OIL SEAL - REAR - REMOVAL, CRANKSHAFT	9-115,9-193,9-47
OIL SEAL(S) - INSTALLATION, CAMSHAFT	9-101,9-179
OIL SEAL(S) - REMOVAL, CAMSHAFT	9-100, 9-179
ON-BOARD DIAGNOSTIC SYSTEM - DIAGNOSIS AND TESTING	8F-24
OPEN-CIRCUIT VOLTAGE TEST - STANDARD PROCEDURE	8F-12
OPENING COVER - INSTALLATION, STEERING COLUMN	23-59
OPENING COVER - REMOVAL, STEERING COLUMN	23-59
OPENING DIMENSION - SPECIFICATIONS, BODY	23-97
OPENING TRIM LACE - INSTALLATION	23-87
OPENING TRIM LACE - REMOVAL	23-87
OPENING WEATHERSTRIP - INSTALLATION, FRONT AND REAR DOOR	23-90
OPENING WEATHERSTRIP - REMOVAL, FRONT AND REAR DOOR	23-90
ORDER, 1.6/2.0L - FIRING	8I-2
ORIFICE TUBE - DESCRIPTION, A/C VARIABLE	24-111,24-40,24-55
ORVR - DESCRIPTION	25-15
ORVR - OPERATION	25-15
OUTER - INSTALLATION, CV BOOT	3-19
OUTER - INSTALLATION, TIE ROD	19-36
OUTER - REMOVAL, CV BOOT	3-18
OUTER - REMOVAL, TIE ROD	19-35
OUTER BELT WEATHERSTRIP - INSTALLATION, FRONT DOOR	23-92
OUTER BELT WEATHERSTRIP - REMOVAL, FRONT DOOR	23-92

Description	Group-Page
OUTLET - DESCRIPTION, CIGAR LIGHTER/POWER	8W-97-1
OUTLET - INSTALLATION, CIGAR LIGHTER/POWER	8W-97-3
OUTLET - OPERATION, CIGAR LIGHTER/POWER	8W-97-2
OUTLET - REMOVAL, CIGAR LIGHTER/POWER	8W-97-3
OUTLET DUCT - INSTALLATION, CENTER AIR	24-27,24-83
OUTLET DUCT - REMOVAL, CENTER AIR	24-27,24-83
OUTLETS - DESCRIPTION, AIR	24-27,24-83
OUTPUT - DESCRIPTION, SPEED SENSOR	21-276
OUTPUT - INSTALLATION, SPEED SENSOR	21-278
OUTPUT - OPERATION, 5 VOLT SUPPLY - PCM	8E-10
OUTPUT - OPERATION, SPEED SENSOR	21-277
OUTPUT - REMOVAL, SPEED SENSOR	21-277
OUTPUT BEARING AND RACE - INSTALLATION	21-144
OUTPUT BEARING AND RACE - REMOVAL	21-143
OUTPUT SHAFT - ASSEMBLY	21-80
OUTPUT SHAFT - DESCRIPTION	21-77
OUTPUT SHAFT - DISASSEMBLY	21-142,21-78
OUTSIDE HANDLE - INSTALLATION, FRONT DOOR	23-21
OUTSIDE HANDLE - INSTALLATION, LIFTGATE	23-13
OUTSIDE HANDLE - INSTALLATION, REAR DOOR	23-31
OUTSIDE HANDLE - REMOVAL, FRONT DOOR	23-21
OUTSIDE HANDLE - REMOVAL, LIFTGATE	23-13
OUTSIDE HANDLE - REMOVAL, REAR DOOR	23-31
OVERHEAD CONSOLE - DESCRIPTION	8M-1
OVERHEAD CONSOLE - OPERATION	8M-1
OVERHEAD CONSOLE, SPECIAL TOOLS	8M-5
PAD - INSTALLATION, SILENCER	23-45
PAD - REMOVAL, SILENCER	23-45
PADS/SHOES - FRONT - INSTALLATION, BRAKE	5-16
PADS/SHOES - FRONT - REMOVAL, BRAKE	5-15
PADS/SHOES - REAR DISC - INSTALLATION, BRAKE	5-19
PADS/SHOES - REAR DISC - REMOVAL, BRAKE	5-17
PADS/SHOES - REAR DRUM - INSTALLATION, BRAKE	5-22
PADS/SHOES - REAR DRUM - REMOVAL, BRAKE	5-19
PAINT CODE - DESCRIPTION	23-66
PAINT TOUCH-UP - DESCRIPTION	23-67
PAN - INSTALLATION, OIL	9-130,9-210,9-61
PAN - REMOVAL, OIL	9-130,9-210,9-60
PANEL - INSTALLATION, FRONT DOOR TRIM	23-25
PANEL - INSTALLATION, GLASS	23-86
PANEL - INSTALLATION, LIFTGATE CHMSL ACCESS	23-13
PANEL - INSTALLATION, LIFTGATE INNER CONTROL ASSEMBLY	23-15
PANEL - INSTALLATION, LIFTGATE TRIM	23-18
PANEL - INSTALLATION, LOWER QUARTER TRIM	23-64
PANEL - INSTALLATION, RADIATOR CLOSURE	23-40
PANEL - INSTALLATION, REAR DOOR TRIM	23-33
PANEL - INSTALLATION, SIDE COWL TRIM	23-62
PANEL - REMOVAL, FRONT DOOR TRIM	23-25
PANEL - REMOVAL, GLASS	23-86
PANEL - REMOVAL, LIFTGATE CHMSL ACCESS	23-13
PANEL - REMOVAL, LIFTGATE INNER CONTROL ASSEMBLY	23-15
PANEL - REMOVAL, LIFTGATE TRIM	23-18
PANEL - REMOVAL, LOWER QUARTER TRIM	23-64
PANEL - REMOVAL, RADIATOR CLOSURE	23-39
PANEL - REMOVAL, REAR DOOR TRIM	23-32
PANEL - REMOVAL, SIDE COWL TRIM	23-62
PANEL ADJUSTMENT, ADJUSTMENTS - SUNROOF GLASS	23-86
PANEL ASSEMBLY - INSTALLATION, INSTRUMENT	23-53
PANEL ASSEMBLY - REMOVAL, INSTRUMENT	23-50
PANEL CENTER BEZEL - INSTALLATION, INSTRUMENT	23-56
PANEL CENTER BEZEL - REMOVAL, INSTRUMENT	23-56
PANEL CENTER BEZEL CONTROL KNOBS - INSTALLATION, INSTRUMENT	23-57
PANEL CENTER BEZEL CONTROL KNOBS - REMOVAL, INSTRUMENT	23-56
PANEL END CAP - INSTALLATION, INSTRUMENT	23-57
PANEL END CAP - REMOVAL, INSTRUMENT	23-57
PANEL REPAIR - STANDARD PROCEDURE, PLASTIC BODY	23-3
PANEL SEAL - INSTALLATION, SUNROOF GLASS	23-87
PANEL SEAL - REMOVAL, SUNROOF GLASS	23-87
PANEL TOP COVER - INSTALLATION, INSTRUMENT	23-58
PANEL TOP COVER - REMOVAL, INSTRUMENT	23-57
PARKING BRAKE - DESCRIPTION	5-61
PARKING BRAKE - INSTALLATION, CABLE	5-67
PARKING BRAKE - INSTALLATION, LEVER	5-69
PARKING BRAKE - INSTALLATION, SHOES	5-70
PARKING BRAKE - OPERATION	5-62
PARKING BRAKE - REMOVAL, CABLE	5-63
PARKING BRAKE - REMOVAL, LEVER	5-68
PARKING BRAKE - REMOVAL, SHOES	5-69
PARKING BRAKE AUTOMATIC ADJUSTER LOCKOUT - STANDARD PROCEDURE	5-62
PARK/TURN SIGNAL LAMP - INSTALLATION	8L-25
PARK/TURN SIGNAL LAMP - REMOVAL	8L-25
PASSENGER AIRBAG - DESCRIPTION	8O-13
PASSENGER AIRBAG - INSTALLATION	8O-15
PASSENGER AIRBAG - OPERATION	8O-14
PASSENGER AIRBAG - REMOVAL	8O-14
PASSENGER AIRBAG COVER - INSTALLATION	8O-15
PASSENGER AIRBAG COVER - REMOVAL	8O-15
PASSENGER HEATED SEAT SWITCH - DESCRIPTION	8G-8
PASSENGER HEATED SEAT SWITCH - DIAGNOSIS AND TESTING	8G-9
PASSENGER HEATED SEAT SWITCH - INSTALLATION	8G-9
PASSENGER HEATED SEAT SWITCH - OPERATION	8G-8
PASSENGER HEATED SEAT SWITCH - REMOVAL	8G-9
PATTERNS - DIAGNOSIS AND TESTING, TIRE WEAR	22-9
PCM GROUND - OPERATION	8E-5
PCM INPUT - OPERATION, DATA BUS COMMUNICATION RECEIVE	8E-5
PCM INPUT - OPERATION, IGNITION SENSE	8E-5
PCM INPUT - OPERATION, SENSOR RETURN	8E-5
PCM OUTPUT - OPERATION, 5 VOLT SUPPLY	8E-10
PCV SYSTEM - DIAGNOSIS AND TESTING	25-18
PCV VALVE - DESCRIPTION	25-18
PCV VALVE - OPERATION	25-18
PEDAL - INSTALLATION, ACCELERATOR	14-27
PEDAL - REMOVAL, ACCELERATOR	14-26
PEDAL - WITH AUTOMATIC TRANSAXLE - INSTALLATION	5-43
PEDAL - WITH AUTOMATIC TRANSAXLE - REMOVAL	5-42
PEDAL - WITH MANUAL TRANSAXLE - INSTALLATION	5-44
PEDAL - WITH MANUAL TRANSAXLE - REMOVAL	5-44
PEDAL POSITION SENSOR - 1.6L - DESCRIPTION, ACCELERATOR	14-27
PERFORMANCE - DIAGNOSIS AND TESTING, ENGINE	9-4
PERFORMANCE - DIAGNOSIS AND TESTING, ENGINE DIAGNOSIS	9-152,9-76
PERFORMANCE TEST - DIAGNOSIS AND TESTING, A/C	24-4,24-60
PERFORMANCE TEST - DIAGNOSIS AND TESTING, HEATER	24-3,24-59
PICK-UP - INSTALLATION, OIL PUMP	9-62
PICK-UP - REMOVAL, OIL PUMP	9-62
PINION FACTOR SETTING - STANDARD PROCEDURE	8E-10
PINS - INSTALLATION, DISC BRAKE CALIPER GUIDE	5-35
PINS - REMOVAL, DISC BRAKE CALIPER GUIDE	5-34
PIPE - INSTALLATION, INTERMEDIATE	11-8
PIPE - REMOVAL, INTERMEDIATE	11-7
PISTON & CONNECTING ROD - DESCRIPTION	9-117,9-195,9-48
PISTON & CONNECTING ROD - INSTALLATION	9-118,9-197
PISTON & CONNECTING ROD - REMOVAL	9-118,9-195
PISTON - FITTING - STANDARD PROCEDURE, CYLINDER BORE	9-48
PISTON RING - FITTING - STANDARD PROCEDURE	9-120,9-50
PISTON RING, FITTING	9-198
PISTON RINGS - INSTALLATION	9-120,9-51
PISTON RINGS - REMOVAL	9-120,9-51
PISTON TO CYLINDER BORE FITTING - STANDARD PROCEDURE	9-117,9-195
PIVOT BEZEL - INSTALLATION, REAR SEAT	23-72
PIVOT BEZEL - REMOVAL, REAR SEAT	23-72
PIVOT BUSHING - INSTALLATION, AXLE	2-38
PIVOT BUSHING - REMOVAL, AXLE	2-37
PLANETARY GEARTRAIN - DESCRIPTION	21-264
PLANETARY GEARTRAIN - OPERATION	21-264
PLASTIC BODY PANEL REPAIR - STANDARD PROCEDURE	23-3
PLASTIGAGE - STANDARD PROCEDURE, MEASURING BEARING CLEARANCE USING	9-13,9-160,9-84
PLATE - DESCRIPTION, BODY CODE	Intro.-1
PLATE - DESCRIPTION, MANUFACTURER	Intro.-10
PLATE - DRUM BRAKES - INSTALLATION, SUPPORT	5-59
PLATE - DRUM BRAKES - REMOVAL, SUPPORT	5-58
PLATE BATTERY CHARGING - STANDARD PROCEDURE, SPIRAL	8F-8
PLATE LAMP - INSTALLATION, LICENSE	8L-18
PLATE LAMP - REMOVAL, LICENSE	8L-18
PLATE LAMP UNIT - INSTALLATION, LICENSE	8L-19
PLATE LAMP UNIT - REMOVAL, LICENSE	8L-19
PLATE MISALIGNMENT - DIAGNOSIS AND TESTING, DRIVE	6-6
PLAY - STANDARD PROCEDURE, CRANKSHAFT END	9-110,9-44
PLAY - STANDARD PROCEDURE, MEASURING CAMSHAFT END	9-101,9-180
PLAY - STANDARD PROCEDURE, MEASURING CRANKSHAFT END	9-189
PLUG - DESCRIPTION, DETENT	21-53
PLUG - INSTALLATION, DETENT	21-55
PLUG - REMOVAL, DETENT	21-55
PLUG CABLE - DESCRIPTION, SPARK	8I-14
PLUG CABLE RESISTANCE, SPECIFICATIONS - SPARK	8I-3
PLUG TUBE - INSTALLATION, SPARK	9-33
PLUG TUBE - REMOVAL, SPARK	9-33
PLUG TUBE SEAL - DESCRIPTION, SPARK	9-32
PLUG TUBE SEAL - INSTALLATION, SPARK	9-32
PLUG TUBE SEAL - REMOVAL, SPARK	9-32
PLUGS - STANDARD PROCEDURE, ENGINE CORE AND OIL GALLERY	9-13,9-160, 9-84
PLUGS, SPECIFICATIONS - SPARK	8I-3
POINTS - DESCRIPTION, LUBRICATION	0-5
POLISHING - DESCRIPTION, FINESSE SANDING/BUFFING	23-67

Description	Group-Page
PORT VALVE CORE - DESCRIPTION, SERVICE	24-110,24-54
PORT VALVE CORES - INSTALLATION, SERVICE	24-111,24-55
PORT VALVE CORES - REMOVAL, SERVICE	24-111,24-55
POSITION LAMP - EXPORT - DESCRIPTION, FRONT	8L-9
POSITION LAMP - EXPORT - DIAGNOSIS AND TESTING, FRONT	8L-9
POSITION LAMP - EXPORT - INSTALLATION, FRONT	8L-10
POSITION LAMP - EXPORT - OPERATION, FRONT	8L-9
POSITION LAMP - EXPORT - REMOVAL, FRONT	8L-10
POSITION SENSOR - 1.6L - DESCRIPTION, ACCELERATOR PEDAL	14-27
POSITION SENSOR - DESCRIPTION, CAMSHAFT	8I-4
POSITION SENSOR - DESCRIPTION, CRANKSHAFT	14-28
POSITION SENSOR - DESCRIPTION, THROTTLE	14-49
POSITION SENSOR - INSTALLATION, THROTTLE	14-50
POSITION SENSOR - OPERATION, CAMSHAFT	8I-4
POSITION SENSOR - OPERATION, CRANKSHAFT	14-28
POSITION SENSOR - OPERATION, THROTTLE	14-49
POSITION SENSOR - REMOVAL, THROTTLE	14-49
POTENTIAL - STANDARD PROCEDURE, TESTING OF VOLTAGE	8W-01-9
POWER BRAKE BOOSTER - DESCRIPTION	5-45
POWER BRAKE BOOSTER - DIAGNOSIS AND TESTING	5-46
POWER BRAKE BOOSTER - OPERATION	5-46
POWER DISTRIBUTION - DESCRIPTION	8W-97-1
POWER DISTRIBUTION - OPERATION	8W-97-1
POWER DISTRIBUTION CENTER - DESCRIPTION	8W-97-5
POWER DISTRIBUTION CENTER - INSTALLATION	8W-97-6
POWER DISTRIBUTION CENTER - OPERATION	8W-97-5
POWER DISTRIBUTION CENTER - REMOVAL	8W-97-6
POWER FOLDAWAY MIRROR SWITCH - RHD - DIAGNOSIS AND TESTING	8N-10
POWER FOLDAWAY MIRROR SWITCH - RHD - INSTALLATION	8N-11
POWER FOLDAWAY MIRROR SWITCH - RHD - REMOVAL	8N-11
POWER LOCKS - DESCRIPTION	8N-1
POWER LOCKS - DIAGNOSIS AND TESTING	8N-3
POWER LOCKS - OPERATION	8N-2
POWER MIRROR SWITCH - LHD - DIAGNOSIS AND TESTING	8N-9
POWER MIRROR SWITCH - LHD - INSTALLATION	8N-9
POWER MIRROR SWITCH - LHD - REMOVAL	8N-9
POWER MIRRORS - DESCRIPTION	8N-8
POWER MIRRORS - DIAGNOSIS AND TESTING	8N-8
POWER MIRRORS - OPERATION	8N-8
POWER SEAT SYSTEM - DESCRIPTION	8N-12
POWER SEAT SYSTEM - DIAGNOSIS AND TESTING	8N-13
POWER SEAT SYSTEM - OPERATION	8N-12
POWER SEAT TRACK - DESCRIPTION	8N-14
POWER SEAT TRACK - DIAGNOSIS AND TESTING	8N-14
POWER SEAT TRACK - INSTALLATION	8N-15
POWER SEAT TRACK - OPERATION	8N-14
POWER SEAT TRACK - REMOVAL	8N-15
POWER STEERING FASTENER TORQUE - SPECIFICATIONS	19-8
POWER STEERING FLOW AND PRESSURE TEST - DIAGNOSIS AND TESTING	19-1
POWER STEERING FLUID LEVEL CHECKING - STANDARD PROCEDURE	19-46
POWER STEERING PRESSURE SWITCH - DESCRIPTION	19-34
POWER STEERING PRESSURE SWITCH - INSTALLATION	19-35
POWER STEERING PRESSURE SWITCH - OPERATION	19-34
POWER STEERING PRESSURE SWITCH - REMOVAL	19-34
POWER STEERING PUMP INITIAL OPERATION - STANDARD PROCEDURE	19-38
POWER STEERING, SPECIAL TOOLS	19-9
POWER STEERING SYSTEM - DESCRIPTION	19-1
POWER STEERING SYSTEM - OPERATION	19-1
POWER WINDOW SWITCH - DIAGNOSIS AND TESTING	8N-18
POWER WINDOW SWITCH - INSTALLATION	8N-19
POWER WINDOW SWITCH - REMOVAL	8N-19
POWER WINDOWS - DESCRIPTION	8N-17
POWER WINDOWS - DIAGNOSIS AND TESTING	8N-17
POWER WINDOWS - OPERATION	8N-17
POWERING SEVERAL LOADS - STANDARD PROCEDURE, TESTING FOR A SHORT TO GROUND ON FUSES	8W-01-9
PRECAUTIONS AND WARNINGS, DESCRIPTION - SAFETY	24-3,24-59
PRECAUTIONS AND WARNINGS, WARNING - SAFETY	23-1
PRECAUTIONS, WARNING - WINDSHIELD SAFETY	23-78
PRELOAD ADJUSTMENT / SHIM SELECTION, ADJUSTMENTS - DIFFERENTIAL BEARING	21-124
PRELOAD MEASUREMENT AND ADJUSTMENT, ADJUSTMENTS - DIFFERENTIAL BEARING	21-229
PREPARATION - STANDARD PROCEDURE, ENGINE GASKET SURFACE	9-12,9-159,9-83
PRESSURE - DIAGNOSIS AND TESTING, CHECKING ENGINE OIL	9-126,9-206,9-57
PRESSURE CAP - DESCRIPTION, COOLING SYSTEM	7-46
PRESSURE CAP - DESCRIPTION, RADIATOR	7-21
PRESSURE CAP - OPERATION, COOLING SYSTEM	7-47
PRESSURE CAP - OPERATION, RADIATOR	7-21
PRESSURE CAP TESTING - DIAGNOSIS AND TESTING, COOLING SYSTEM	7-21,7-47
PRESSURE CLUTCH CYCLING SWITCH - DIAGNOSIS AND TESTING, A/C LOW	24-19, 24-75
PRESSURE FOR HIGH SPEED OPERATION - STANDARD PROCEDURE, TIRE	22-10
PRESSURE LEAKAGE TEST - DIAGNOSIS AND TESTING, CYLINDER COMBUSTION	9-156,9-80,9-9
PRESSURE REGULATOR - DESCRIPTION, FUEL	14-6
PRESSURE REGULATOR - INSTALLATION, FUEL	14-7
PRESSURE REGULATOR - OPERATION, FUEL	14-6
PRESSURE REGULATOR - REMOVAL, FUEL	14-6
PRESSURE RELEASE PROCEDURE - STANDARD PROCEDURE, FUEL SYSTEM	14-2
PRESSURE RELIEF TESTING - DIAGNOSIS AND TESTING, COOLING SYSTEM	7-22,7-47
PRESSURE RELIEF VALVE - INSTALLATION, HIGH	24-40,24-95
PRESSURE RELIEF VALVE - REMOVAL, HIGH	24-40,24-95
PRESSURE SENSOR/SWITCH - DESCRIPTION, OIL	9-210
PRESSURE SENSOR/SWITCH - INSTALLATION, OIL	9-131,9-211
PRESSURE SENSOR/SWITCH - OPERATION, OIL	9-211
PRESSURE SENSOR/SWITCH - REMOVAL, OIL	9-131,9-211
PRESSURE, SPECIFICATIONS - FUEL SYSTEM	14-3
PRESSURE SWITCH - DESCRIPTION, A/C HIGH	24-18,24-74
PRESSURE SWITCH - DESCRIPTION, A/C LOW	24-19,24-75
PRESSURE SWITCH - DESCRIPTION, POWER STEERING	19-34
PRESSURE SWITCH - INSTALLATION, A/C HIGH	24-18,24-74
PRESSURE SWITCH - INSTALLATION, A/C LOW	24-19,24-75
PRESSURE SWITCH - INSTALLATION, POWER STEERING	19-35
PRESSURE SWITCH - OPERATION, A/C LOW	24-19,24-75
PRESSURE SWITCH - OPERATION, POWER STEERING	19-34
PRESSURE SWITCH - REMOVAL, A/C HIGH	24-18,24-74
PRESSURE SWITCH - REMOVAL, A/C LOW	24-19,24-75
PRESSURE SWITCH - REMOVAL, POWER STEERING	19-34
PRESSURE TEST - DIAGNOSIS AND TESTING, CYLINDER COMPRESSION	9-156,9-8, 9-80
PRESSURE TEST - DIAGNOSIS AND TESTING, POWER STEERING FLOW	19-1
PRESSURE TESTS - DIAGNOSIS AND TESTING, CLUTCH AIR	21-157
PRESSURE TESTS - DIAGNOSIS AND TESTING, HYDRAULIC	21-154
PRESSURE TRANSDUCER - DESCRIPTION, A/C	24-20,24-76
PRESSURE TRANSDUCER - DIAGNOSIS AND TESTING, A/C	24-20,24-76
PRESSURE TRANSDUCER - INSTALLATION, A/C	24-20,24-76
PRESSURE TRANSDUCER - OPERATION, A/C	24-20,24-76
PRESSURE TRANSDUCER - REMOVAL, A/C	24-20,24-76
PRESSURES - STANDARD PROCEDURE, TIRE INFLATION	22-10
PROBLEM CAUSES - DIAGNOSIS AND TESTING, COMMON	21-96
PROGRAMING - STANDARD PROCEDURE, TRANSMITTER	8N-7
PROGRAMMABLE COMMUNICATIONS INTERFACE (PCI) BUS, OPERATION	14-24
PROGRAMMING - STANDARD PROCEDURE, TRANSPONDER	8Q-8
PROPORTIONING - DESCRIPTION, ELECTRONIC VARIABLE BRAKE	5-74
PROPORTIONING - OPERATION, ELECTRONIC VARIABLE BRAKE	5-75
PROPORTIONING VALVE - DESCRIPTION	5-49
PROPORTIONING VALVE - DIAGNOSIS AND TESTING	5-50
PROPORTIONING VALVE - INSTALLATION	5-52
PROPORTIONING VALVE - OPERATION	5-50
PROPORTIONING VALVE - REMOVAL	5-52
PULLEY - DESCRIPTION, AUTOMATIC BELT TENSIONER	7-11
PULLEY - INSTALLATION, AUTOMATIC BELT TENSIONER	7-11
PULLEY - INSTALLATION, IDLER	7-5
PULLEY - INSTALLATION, TIMING BELT TENSIONER	9-148,9-231
PULLEY - REMOVAL, AUTOMATIC BELT TENSIONER	7-11
PULLEY - REMOVAL, IDLER	7-5
PULLEY - REMOVAL, TIMING BELT TENSIONER	9-148,9-231
PULLEY SPLASH SHIELD - INSTALLATION, FRONT SIDE RAIL ACCESS	23-38
PULLEY SPLASH SHIELD - REMOVAL, FRONT SIDE RAIL ACCESS	23-38
PUMP - ASSEMBLY, OIL	9-134,9-212
PUMP - ASSEMBLY, OIL	21-264
PUMP - CLEANING, OIL	9-211
PUMP - DESCRIPTION, FUEL	14-7
PUMP - DESCRIPTION, OIL	21-263
PUMP - DISASSEMBLY, OIL	9-132,9-211

Description	Group-Page
PUMP - DISASSEMBLY, OIL	21-263
PUMP - INSPECTION, OIL	9-132,9-212
PUMP - INSTALLATION, OIL	9-134,9-213,9-62
PUMP - INSTALLATION, SEAL - OIL	21-265
PUMP - OPERATION, FUEL	14-7
PUMP - OPERATION, OIL	21-263
PUMP - REMOVAL, OIL	9-131,9-211,9-62
PUMP - REMOVAL, SEAL - OIL	21-265
PUMP ASSEMBLY - ASSEMBLY, WATER PUMP/POWER STEERING	7-29
PUMP ASSEMBLY - DESCRIPTION, WATER PUMP/POWER STEERING	7-27
PUMP ASSEMBLY - DISASSEMBLY, WATER PUMP/POWER STEERING	7-28
PUMP ASSEMBLY - INSTALLATION, WATER PUMP/POWER STEERING	7-30
PUMP ASSEMBLY - REMOVAL, WATER PUMP/POWER STEERING	7-28
PUMP, DIAGNOSIS AND TESTING - WATER	7-59
PUMP INITIAL OPERATION - STANDARD PROCEDURE, POWER STEERING	19-38
PUMP INLET TUBE - INSTALLATION, WATER	7-60
PUMP INLET TUBE - REMOVAL, WATER	7-60
PUMP MODULE - DESCRIPTION, FUEL	14-7
PUMP MODULE - INSTALLATION, FUEL	14-8
PUMP MODULE - OPERATION, FUEL	14-7
PUMP MODULE - REMOVAL, FUEL	14-8
PUMP MOTOR - INSTALLATION, WASHER	8R-18
PUMP MOTOR - REMOVAL, WASHER	8R-17
PUMP MOTOR - RHD - INSTALLATION, WASHER	8R-18
PUMP MOTOR - RHD - REMOVAL, WASHER	8R-18
PUMP PICK-UP - INSTALLATION, OIL	9-62
PUMP PICK-UP - REMOVAL, OIL	9-62
PUMP RELAY - DESCRIPTION, FUEL	14-36
PUMP RELAY - OPERATION, FUEL	14-36
PUMP/POWER STEERING PUMP ASSEMBLY - ASSEMBLY, WATER	7-29
PUMP/POWER STEERING PUMP ASSEMBLY - DESCRIPTION, WATER	7-27
PUMP/POWER STEERING PUMP ASSEMBLY - DISASSEMBLY, WATER	7-28
PUMP/POWER STEERING PUMP ASSEMBLY - INSTALLATION, WATER	7-30
PUMP/POWER STEERING PUMP ASSEMBLY - REMOVAL, WATER	7-28
QUARTER TRIM PANEL - INSTALLATION, LOWER	23-64
QUARTER TRIM PANEL - REMOVAL, LOWER	23-64
QUARTER WINDOW - INSTALLATION	23-76
QUARTER WINDOW - REMOVAL	23-76
QUICK LEARN PROCEDURE - STANDARD PROCEDURE	8E-10
QUICK-CONNECT FITTINGS - STANDARD PROCEDURE	14-17
RACE - INSTALLATION, OUTPUT BEARING	21-144
RACE - REMOVAL, OUTPUT BEARING	21-143
RACK CROSSBAR - INSTALLATION, LUGGAGE	23-39
RACK CROSSBAR - REMOVAL, LUGGAGE	23-39
RACK SIDE RAIL - INSTALLATION, LUGGAGE	23-39
RACK SIDE RAIL - REMOVAL, LUGGAGE	23-39
RADIAL-PLY TIRES - DESCRIPTION	22-8
RADIATOR - CLEANING	7-26,7-57
RADIATOR - INSPECTION	7-26,7-57
RADIATOR - INSTALLATION	7-26,7-57
RADIATOR - REMOVAL	7-25,7-55
RADIATOR CLOSURE PANEL - INSTALLATION	23-40
RADIATOR CLOSURE PANEL - REMOVAL	23-39
RADIATOR DRAINCOCK - INSTALLATION	7-23, 7-58
RADIATOR DRAINCOCK - REMOVAL	7-22,7-57
RADIATOR FAN - DESCRIPTION	7-23,7-52
RADIATOR FAN - DIAGNOSIS AND TESTING	7-24
RADIATOR FAN - INSTALLATION	7-25
RADIATOR FAN - OPERATION	7-23,7-53
RADIATOR FAN - REMOVAL	7-24
RADIATOR FAN MOTOR TEST, DIAGNOSIS AND TESTING	7-54
RADIATOR PRESSURE CAP - DESCRIPTION	7-21
RADIATOR PRESSURE CAP - OPERATION	7-21
RADIO - DESCRIPTION	8A-7
RADIO - DESCRIPTION, ANTENNA - SATELLITE	8A-6
RADIO - DESCRIPTION, ANTENNA CABLE - SATELLITE	8A-7
RADIO - INSTALLATION	8A-8
RADIO - INSTALLATION, ANTENNA - SATELLITE	8A-6
RADIO - INSTALLATION, ANTENNA CABLE - SATELLITE	8A-7
RADIO - OPERATION	8A-7
RADIO - OPERATION, ANTENNA - SATELLITE	8A-6
RADIO - REMOVAL	8A-8
RADIO - REMOVAL, ANTENNA - SATELLITE	8A-6
RADIO - REMOVAL, ANTENNA CABLE - SATELLITE	8A-7
RADIO NOISE SUPPRESSION COMPONENTS - DESCRIPTION	8A-8
RADIO NOISE SUPPRESSION COMPONENTS - INSTALLATION	8A-11
RADIO NOISE SUPPRESSION COMPONENTS - OPERATION	8A-8
RADIO NOISE SUPPRESSION COMPONENTS - REMOVAL	8A-9
RAIL - DESCRIPTION, FUEL	14-9
RAIL - INSTALLATION, LUGGAGE RACK SIDE	23-39
RAIL - OPERATION, FUEL	14-9
RAIL - REMOVAL, LUGGAGE RACK SIDE	23-39
RAIL ACCESS PULLEY SPLASH SHIELD - INSTALLATION, FRONT SIDE	23-38
RAIL ACCESS PULLEY SPLASH SHIELD - REMOVAL, FRONT SIDE	23-38
RAIL AND FORK - DISASSEMBLY, SHIFT	21-146
RAIL BUSHINGS - INSTALLATION, SHIFT	21-146
RAIL BUSHINGS - REMOVAL, SHIFT	21-146
RANGE - SPECIFICATIONS, TRANSMITTER	8N-7
RANGE INDICATOR ILLUMINATION - INSTALLATION, TRANS	8L-33
RANGE INDICATOR ILLUMINATION - REMOVAL, TRANS	8L-33
RANGE SENSOR - DESCRIPTION, TRANSMISSION	21-285
RANGE SENSOR - OPERATION, TRANSMISSION	21-286
REAR - DESCRIPTION, AXLE - FRONT WHEEL DRIVE	2-29
REAR - INSPECTION, AXLE - FRONT WHEEL DRIVE	2-33
REAR - INSTALLATION, AXLE - FRONT WHEEL DRIVE	2-33
REAR - INSTALLATION, CRANKSHAFT OIL SEAL	9-115,9-193,9-47
REAR - INSTALLATION, WHEEL MOUNTING STUDS	22-16
REAR - OPERATION, AXLE - FRONT WHEEL DRIVE	2-29
REAR - REMOVAL, AXLE - FRONT WHEEL DRIVE	2-29
REAR - REMOVAL, CRANKSHAFT OIL SEAL	9-115,9-193,9-47
REAR - REMOVAL, DISC BRAKE CALIPER	5-27
REAR - REMOVAL, WHEEL MOUNTING STUDS	22-16
REAR BEARING OIL FEED TROUGH - INSTALLATION	21-144
REAR BEARING OIL FEED TROUGH - REMOVAL	21-144
REAR BRAKE ROTOR - INSTALLATION	5-57
REAR BRAKE ROTOR - REMOVAL	5-56
REAR BUMPER FASCIA - INSTALLATION	13-3
REAR BUMPER FASCIA - REMOVAL	13-3
REAR BUMPER REINFORCEMENT - INSTALLATION	13-3
REAR BUMPER REINFORCEMENT - REMOVAL	13-3
REAR CARGO LAMP - INSTALLATION	8L-32
REAR CARGO LAMP - REMOVAL	8L-32
REAR CARGO LAMP UNIT - INSTALLATION	8L-32
REAR CARGO LAMP UNIT - REMOVAL	8L-32
REAR CENTER SEAT BELT & RETRACTOR - INSTALLATION	8O-16
REAR CENTER SEAT BELT & RETRACTOR - REMOVAL	8O-16
REAR DISC - INSTALLATION, BRAKE PADS/SHOES	5-19
REAR DISC - REMOVAL, BRAKE PADS/SHOES	5-17
REAR DOOR - INSTALLATION	23-30
REAR DOOR - REMOVAL	23-30
REAR DOOR APPLIQUE - INSTALLATION	23-29
REAR DOOR APPLIQUE - REMOVAL	23-28
REAR DOOR CHECK STRAP - INSTALLATION	23-29
REAR DOOR CHECK STRAP - REMOVAL	23-29
REAR DOOR GLASS - INSTALLATION	23-30
REAR DOOR GLASS - REMOVAL	23-30
REAR DOOR GLASS RUN WEATHERSTRIP - INSTALLATION	23-93
REAR DOOR GLASS RUN WEATHERSTRIP - REMOVAL	23-92
REAR DOOR HINGE - INSTALLATION	23-31
REAR DOOR HINGE - REMOVAL	23-31
REAR DOOR INNER BELT WEATHERSTRIP - INSTALLATION	23-93
REAR DOOR INNER BELT WEATHERSTRIP - REMOVAL	23-93
REAR DOOR LATCH - INSTALLATION	23-32
REAR DOOR LATCH - REMOVAL	23-32
REAR DOOR LATCH ADJUSTMENT, ADJUSTMENTS	23-32
REAR DOOR LATCH STRIKER - INSTALLATION	23-32
REAR DOOR LATCH STRIKER - REMOVAL	23-32
REAR DOOR OPENING WEATHERSTRIP - INSTALLATION, FRONT	23-90
REAR DOOR OPENING WEATHERSTRIP - REMOVAL, FRONT	23-90
REAR DOOR OUTSIDE HANDLE - INSTALLATION	23-31
REAR DOOR OUTSIDE HANDLE - REMOVAL	23-31
REAR DOOR TRIM PANEL - INSTALLATION	23-33
REAR DOOR TRIM PANEL - REMOVAL	23-32
REAR DOOR UPPER SECONDARY WEATHERSTRIP - INSTALLATION, FRONT	23-90
REAR DOOR UPPER SECONDARY WEATHERSTRIP - REMOVAL, FRONT	23-90
REAR DOOR WATER DAM - INSTALLATION	23-33
REAR DOOR WATER DAM - REMOVAL	23-33
REAR DOOR WINDOW REGULATOR - INSTALLATION	23-34
REAR DOOR WINDOW REGULATOR - REMOVAL	23-34
REAR DRUM - INSTALLATION, BRAKE PADS/SHOES	5-22
REAR DRUM - REMOVAL, BRAKE PADS/SHOES	5-19
REAR EMERGENCY TOW EYE - INSTALLATION	13-13
REAR EMERGENCY TOW EYE - REMOVAL	13-13
REAR FOG LAMP SWITCH - EXPORT - DESCRIPTION	8L-25
REAR FOG LAMP SWITCH - EXPORT - OPERATION	8L-25
REAR SEAT - INSTALLATION	23-70
REAR SEAT - REMOVAL	23-70
REAR SEAT BACK - INSTALLATION	23-71
REAR SEAT BACK - REMOVAL	23-71
REAR SEAT BACK COVER - INSTALLATION	23-71
REAR SEAT BACK COVER - REMOVAL	23-71
REAR SEAT BACK CUSHION / COVER - INSTALLATION	23-72
REAR SEAT BACK CUSHION / COVER - REMOVAL	23-71
REAR SEAT BELT & RETRACTOR - INSTALLATION	8O-16
REAR SEAT BELT & RETRACTOR - REMOVAL	8O-16
REAR SEAT BELT BUCKLE - REMOVAL	8O-16
REAR SEAT CUSHION - INSTALLATION	23-71
REAR SEAT CUSHION - REMOVAL	23-71

Description	Group-Page
REAR SEAT PIVOT BEZEL - INSTALLATION	23-72
REAR SEAT PIVOT BEZEL - REMOVAL	23-72
REAR SUSPENSION - DESCRIPTION	2-26
REAR SUSPENSION - OPERATION	2-26
REAR SUSPENSION FASTENER TORQUE, SPECIFICATIONS	2-28
REAR SUSPENSION, SPECIAL TOOLS	2-28
REAR VIEW MIRROR - INSTALLATION, INSIDE	23-65
REAR VIEW MIRROR - REMOVAL, INSIDE	23-65
REAR WASHER NOZZLE - INSTALLATION	8R-14
REAR WASHER NOZZLE - REMOVAL	8R-14
REAR WHEEL SPEED SENSOR - DESCRIPTION	5-80
REAR WHEEL SPEED SENSOR - INSTALLATION	5-82
REAR WHEEL SPEED SENSOR - OPERATION	5-81
REAR WHEEL SPEED SENSOR - REMOVAL	5-81
REAR WINDOW DEFOGGER GRID LINES, STANDARD PROCEDURE	8G-13
REAR WINDOW DEFOGGER SWITCH, DIAGNOSIS AND TESTING	8G-11
REAR WINDOW DEFOGGER SYSTEM, DIAGNOSIS AND TESTING	8G-10
REAR WIPER ARMS - INSTALLATION	8R-15
REAR WIPER ARMS - REMOVAL	8R-14
REAR WIPER BLADE - INSTALLATION	8R-15
REAR WIPER BLADE - REMOVAL	8R-15
REAR WIPER MOTOR - INSTALLATION	8R-16
REAR WIPER MOTOR - REMOVAL	8R-15
REAR WIPER SWITCH - DIAGNOSIS AND TESTING	8R-16
REAR WIPER SWITCH - REMOVAL	8R-17
REAR WIPER SYSTEM - DIAGNOSIS AND TESTING	8R-5
RECEIVE - PCM INPUT - OPERATION, DATA BUS COMMUNICATION	8E-5
RECEIVER MODULE - DESCRIPTION, SATELLITE	8A-11
RECEIVER MODULE - INSTALLATION, SATELLITE	8A-11
RECEIVER MODULE - OPERATION, SATELLITE	8A-11
RECEIVER MODULE - REMOVAL, SATELLITE	8A-11
RECIRCULATION DOOR ACTUATOR - DESCRIPTION	24-23,24-78
RECIRCULATION DOOR ACTUATOR - INSTALLATION	24-24,24-79
RECIRCULATION DOOR ACTUATOR - REMOVAL	24-23,24-79
RECOVERY - STANDARD PROCEDURE, REFRIGERANT	24-65,24-9
RECOVERY CONTAINER - DESCRIPTION, COOLANT	7-18,7-45
RECOVERY CONTAINER - INSTALLATION, COOLANT	7-18,7-45
RECOVERY CONTAINER - OPERATION, COOLANT	7-18,7-45
RECOVERY CONTAINER - REMOVAL, COOLANT	7-18,7-45
REFACING - STANDARD PROCEDURE, VALVE AND VALVE SEAT	9-40
REFERENCES - DESCRIPTION, TORQUE	Intro.-8
REFRIGERANT - DESCRIPTION	24-103,24-47
REFRIGERANT - OPERATION	24-103,24-47
REFRIGERANT - STANDARD PROCEDURE	24-103,24-47
REFRIGERANT OIL - DESCRIPTION	24-104, 24-48
REFRIGERANT OIL - OPERATION	24-104,24-48
REFRIGERANT OIL LEVEL - STANDARD PROCEDURE, SERVICING	24-104,24-49
REFRIGERANT OIL LEVEL CHECK - STANDARD PROCEDURE	24-104,24-49
REFRIGERANT RECOVERY - STANDARD PROCEDURE	24-65,24-9
REFRIGERANT SYSTEM - STANDARD PROCEDURE, EVACUATING	24-62,24-8
REGULATOR - DESCRIPTION, FUEL PRESSURE	14-6
REGULATOR - DESCRIPTION, VOLTAGE	8F-33
REGULATOR - INSTALLATION, FRONT DOOR WINDOW	23-27
REGULATOR - INSTALLATION, FUEL PRESSURE	14-7
REGULATOR - INSTALLATION, REAR DOOR WINDOW	23-34
REGULATOR - OPERATION, FUEL PRESSURE	14-6
REGULATOR - OPERATION, VOLTAGE	8F-33
REGULATOR - REMOVAL, FRONT DOOR WINDOW	23-27
REGULATOR - REMOVAL, FUEL PRESSURE	14-6
REGULATOR - REMOVAL, REAR DOOR WINDOW	23-34
REINFORCEMENT - INSTALLATION, FRONT BUMPER	13-1
REINFORCEMENT - INSTALLATION, REAR BUMPER	13-3
REINFORCEMENT - REMOVAL, FRONT BUMPER	13-1
REINFORCEMENT - REMOVAL, REAR BUMPER	13-3
RELAY - DESCRIPTION, A/C COMPRESSOR CLUTCH	24-11,24-67
RELAY - DESCRIPTION, AUTO SHUT DOWN	8I-3
RELAY - DESCRIPTION, FUEL PUMP	14-36
RELAY - DESCRIPTION, HEATED SEAT	8G-7
RELAY - DESCRIPTION, TRANSMISSION CONTROL	21-285
RELAY - DIAGNOSIS AND TESTING, HORN	8H-3
RELAY - INSTALLATION	8W-97-6
RELAY - INSTALLATION, A/C COMPRESSOR CLUTCH	24-12,24-68
RELAY - INSTALLATION, HEATED SEAT	8G-8
RELAY - INSTALLATION, HORN	8H-4
RELAY - OPERATION, A/C COMPRESSOR CLUTCH	24-12,24-68
RELAY - OPERATION, AUTO SHUT DOWN	8I-3
RELAY - OPERATION, FUEL PUMP	14-36
RELAY - OPERATION, HEATED SEAT	8G-7
RELAY - OPERATION, TRANSMISSION CONTROL	21-285
RELAY - REMOVAL	8W-97-6
RELAY - REMOVAL, A/C COMPRESSOR CLUTCH	24-12,24-68
RELAY - REMOVAL, HEATED SEAT	8G-7
RELAY - REMOVAL, HORN	8H-4
RELEASE BEARING - DESCRIPTION, CLUTCH	6-18
RELEASE BEARING - INSTALLATION, CLUTCH	6-19
RELEASE BEARING - OPERATION, CLUTCH	6-19
RELEASE BEARING - REMOVAL, CLUTCH	6-19
RELEASE CABLE - INSTALLATION, HOOD LATCH	23-45
RELEASE CABLE - REMOVAL, HOOD LATCH	23-44
RELEASE PROCEDURE - STANDARD PROCEDURE, FUEL SYSTEM PRESSURE	14-2
RELIEF TESTING - DIAGNOSIS AND TESTING, COOLING SYSTEM PRESSURE	7-22,7-47
RELIEF VALVE - INSTALLATION, HIGH PRESSURE	24-40,24-95
RELIEF VALVE - REMOVAL, HIGH PRESSURE	24-40,24-95
REMOTE KEYLESS ENTRY MODULE - DIAGNOSIS AND TESTING	8N-5
REMOTE KEYLESS ENTRY MODULE - INSTALLATION	8N-5
REMOTE KEYLESS ENTRY MODULE - REMOVAL	8N-5
REMOTE KEYLESS ENTRY TRANSMITTER - DESCRIPTION	8N-6
REMOTE KEYLESS ENTRY TRANSMITTER - DIAGNOSIS AND TESTING	8N-6
REMOTE KEYLESS ENTRY TRANSMITTER - OPERATION	8N-6
REPAIR - DESCRIPTION, THREADED HOLE	Intro.-5
REPAIR - STANDARD PROCEDURE, PLASTIC BODY PANEL	23-3
REPAIR OF DAMAGED OR WORN THREADS - STANDARD PROCEDURE	9-11,9-158,9-82
REPAIR, STANDARD PROCEDURE - GRID LINE AND TERMINAL	8G-13
REPAIRING - STANDARD PROCEDURE, TIRE LEAK	22-10
REPEATER LAMP - DIAGNOSIS AND TESTING, SIDE	8L-26
REPEATER LAMP - EXPORT - INSTALLATION, SIDE	8L-26
REPEATER LAMP - EXPORT - REMOVAL, SIDE	8L-26
REPEATER LAMP UNIT - EXPORT - INSTALLATION, SIDE	8L-26
REPEATER LAMP UNIT - EXPORT - REMOVAL, SIDE	8L-26
REQUIREMENTS - DESCRIPTION, FUEL	0-3
REQUIREMENTS, DESCRIPTION - ENGINE COOLING SYSTEM	24-3,24-59
RESERVOIR - DESCRIPTION	19-62
RESERVOIR - DESCRIPTION, VACUUM	8P-9
RESERVOIR - INSTALLATION, FLUID	5-38
RESERVOIR - INSTALLATION, VACUUM	8P-10
RESERVOIR - INSTALLATION, WASHER	8R-19
RESERVOIR - OPERATION, VACUUM	8P-9
RESERVOIR - REMOVAL, FLUID	5-37
RESERVOIR - REMOVAL, VACUUM	8P-9
RESERVOIR - REMOVAL, WASHER	8R-19
RESISTANCE, SPECIFICATIONS - SPARK PLUG CABLE	8I-3
RESISTANCE TEST - DIAGNOSIS AND TESTING, FEED CIRCUIT	8F-38
RESISTOR BLOCK - DESCRIPTION, BLOWER MOTOR	24-21,24-76
RESISTOR BLOCK - INSTALLATION, BLOWER MOTOR	24-21,24-77
RESISTOR BLOCK - REMOVAL, BLOWER MOTOR	24-21,24-76
RESTRAINT - INSTALLATION, FRONT SEAT HEAD	23-70
RESTRAINT - REMOVAL, FRONT SEAT HEAD	23-70
RESTRAINT CONTROLLER - DESCRIPTION, OCCUPANT	8O-12
RESTRAINT CONTROLLER - INSTALLATION, OCCUPANT	8O-13
RESTRAINT CONTROLLER - OPERATION, OCCUPANT	8O-12
RESTRAINT CONTROLLER - REMOVAL, OCCUPANT	8O-13
RESTRAINTS - DESCRIPTION	8O-1
RESTRAINTS - OPERATION	8O-2
RESTRAINTS - WARNING	8O-3
RESTRICTION CHECK - DIAGNOSIS AND TESTING, EXHAUST SYSTEM	11-3
RETRACTOR - INSTALLATION, FRONT SEAT BELT	8O-11
RETRACTOR - INSTALLATION, REAR CENTER SEAT BELT	8O-16
RETRACTOR - INSTALLATION, REAR SEAT BELT	8O-16
RETRACTOR - REMOVAL, FRONT SEAT BELT	8O-11
RETRACTOR - REMOVAL, REAR CENTER SEAT BELT	8O-16
RETRACTOR - REMOVAL, REAR SEAT BELT	8O-16
RETURN - PCM INPUT - OPERATION, SENSOR	8E-5
RETURN HOSE - INSTALLATION, HEATER	24-101,24-45
RETURN HOSE - REMOVAL, HEATER	24-101, 24-45
RETURN TUBE - INSTALLATION, HEATER	7-27
RETURN TUBE - REMOVAL, HEATER	7-27
REVERSE SHAFT - ASSEMBLY	21-87
REVERSE SHAFT - DESCRIPTION	21-85
REVERSE SHAFT - DISASSEMBLY	21-86
RHD - ADJUSTMENT, FRONT WIPER ARMS	8R-7
RHD - DESCRIPTION, MASTER CYLINDER	6-26
RHD - DIAGNOSIS AND TESTING, POWER FOLDAWAY MIRROR SWITCH	8N-10
RHD - INSTALLATION	5-42,5-49
RHD - INSTALLATION	6-18
RHD - INSTALLATION	19-18,19-34

Description	Group-Page
RHD - INSTALLATION, FRONT WIPER MODULE	8R-10
RHD - INSTALLATION, FRONT WIPER MOTOR	8R-13
RHD - INSTALLATION, MASTER CYLINDER	6-29
RHD - INSTALLATION, POWER FOLDAWAY MIRROR SWITCH	8N-11
RHD - INSTALLATION, WASHER PUMP MOTOR	8R-18
RHD - OPERATION, MASTER CYLINDER	6-26
RHD - REMOVAL	5-41,5-48
RHD - REMOVAL	6-17
RHD - REMOVAL	19-16,19-32
RHD - REMOVAL, FRONT WIPER MODULE	8R-10
RHD - REMOVAL, FRONT WIPER MOTOR	8R-12
RHD - REMOVAL, MASTER CYLINDER	6-26
RHD - REMOVAL, POWER FOLDAWAY MIRROR SWITCH	8N-11
RHD - REMOVAL, WASHER PUMP MOTOR	8R-18
RIGHT ENGINE MOUNT BRACKET - INSTALLATION	9-55
RIGHT ENGINE MOUNT BRACKET - REMOVAL	9-54
RIGHT MOUNT - INSTALLATION	9-123,9-203, 9-55
RIGHT MOUNT - REMOVAL	9-123,9-203,9-55
RING - FITTING - STANDARD PROCEDURE, PISTON	9-120,9-50
RING, FITTING - PISTON	9-198
RINGS - INSTALLATION, PISTON	9-120,9-51
RINGS - REMOVAL, PISTON	9-120,9-51
RKE TRANSMITTER BATTERIES - STANDARD PROCEDURE	8N-7
RKE/VTSS CONFIGURING A NEW MODULE - STANDARD PROCEDURE	8Q-3
ROAD TEST - DIAGNOSIS AND TESTING	8P-3
ROAD TEST - DIAGNOSIS AND TESTING	21-154
ROAD TEST - DIAGNOSIS AND TESTING, INSPECTION	5-76
ROCKER ARM / LASH ADJUSTER - DESCRIPTION, ROCKER ARM SHAFT	9-34
ROCKER ARM / LASH ADJUSTER - INSTALLATION, ROCKER ARM SHAFT	9-35
ROCKER ARM / LASH ADJUSTER - REMOVAL, ROCKER ARM SHAFT	9-34
ROCKER ARM SHAFT / ROCKER ARM / LASH ADJUSTER - DESCRIPTION	9-34
ROCKER ARM SHAFT / ROCKER ARM / LASH ADJUSTER - INSTALLATION	9-35
ROCKER ARM SHAFT / ROCKER ARM / LASH ADJUSTER - REMOVAL	9-34
ROCKER ARMS - INSPECTION	9-106,9-185
ROCKER ARMS - INSTALLATION	9-106,9-185
ROCKER ARMS - REMOVAL	9-106,9-185
ROD - DESCRIPTION, PISTON & CONNECTING	9-117,9-195,9-48
ROD - INSTALLATION, LIFTGATE SUPPORT	23-17
ROD - INSTALLATION, PISTON & CONNECTING	9-118,9-197
ROD - OUTER - INSTALLATION, TIE	19-36
ROD - OUTER - REMOVAL, TIE	19-35
ROD - REMOVAL, LIFTGATE SUPPORT	23-17
ROD - REMOVAL, PISTON & CONNECTING	9-118,9-195
ROD AND BEARING - FITTING - STANDARD PROCEDURE, CONNECTING	9-48
ROD, FITTING - CONNECTING	9-119,9-198
ROLLING DOOR LOCKS - STANDARD PROCEDURE	8N-3
ROTATION - STANDARD PROCEDURE, TIRE AND WHEEL	22-6
ROTOR - DESCRIPTION	5-52
ROTOR - DIAGNOSIS AND TESTING, BRAKE	5-52
ROTOR - INSTALLATION, FRONT BRAKE	5-57
ROTOR - INSTALLATION, REAR BRAKE	5-57
ROTOR - REMOVAL, FRONT BRAKE	5-56
ROTOR - REMOVAL, REAR BRAKE	5-56
ROTOR LIMITS/SPECIFICATIONS, SPECIFICATIONS - BRAKE	5-57
ROTOR MACHINING - STANDARD PROCEDURE, BRAKE	5-55
ROUTINE COOLANT LEVEL CHECK - STANDARD PROCEDURE	7-17,7-43
RUN WEATHERSTRIP - INSTALLATION, FRONT DOOR GLASS	23-90
RUN WEATHERSTRIP - INSTALLATION, REAR DOOR GLASS	23-93
RUN WEATHERSTRIP - REMOVAL, FRONT DOOR GLASS	23-90
RUN WEATHERSTRIP - REMOVAL, REAR DOOR GLASS	23-92
RUNNING LAMP MODULE - DESCRIPTION, DAYTIME	8L-7
RUNNING LAMP MODULE - OPERATION, DAYTIME	8L-7
RUNOUT - DIAGNOSIS AND TESTING, TIRE AND WHEEL	22-1
RUNOUT, SPECIFICATIONS - TONE WHEEL	5-78
SAFETY CERTIFICATION LABEL - DESCRIPTION, VEHICLE	Intro.-10
SAFETY PRECAUTIONS AND WARNINGS, DESCRIPTION	24-3,24-59
SAFETY PRECAUTIONS AND WARNINGS, WARNING	23-1
SAFETY PRECAUTIONS, WARNING - WINDSHIELD	23-78
SANDING/BUFFING & POLISHING - DESCRIPTION, FINESSE	23-67
SATELLITE RADIO - DESCRIPTION, ANTENNA	8A-6
SATELLITE RADIO - DESCRIPTION, ANTENNA CABLE	8A-7
SATELLITE RADIO - INSTALLATION, ANTENNA	8A-6
SATELLITE RADIO - INSTALLATION, ANTENNA CABLE	8A-7
SATELLITE RADIO - OPERATION, ANTENNA	8A-6
SATELLITE RADIO - REMOVAL, ANTENNA	8A-6
SATELLITE RADIO - REMOVAL, ANTENNA CABLE	8A-7
SATELLITE RECEIVER MODULE - DESCRIPTION	8A-11
SATELLITE RECEIVER MODULE - INSTALLATION	8A-11
SATELLITE RECEIVER MODULE - OPERATION	8A-11
SATELLITE RECEIVER MODULE - REMOVAL	8A-11
SCHEDULES - DESCRIPTION, MAINTENANCE	0-5
SCHEMATICS AND DIAGRAMS - 41TE TRANSAXLE HYDRAULIC SCHEMATICS	21-203
SCHEMATICS AND DIAGRAMS - SPECIAL TOOLS	21-217
SCHEMATICS AND DIAGRAMS - SPECIFICATIONS	21-215
SCHEMATICS, SCHEMATICS AND DIAGRAMS - 41TE TRANSAXLE HYDRAULIC	21-203
SCREEN - INSTALLATION, COWL GRILLE	23-35
SCREEN - REMOVAL, COWL GRILLE	23-35
SEAL - DESCRIPTION, COMPRESSOR FRONT SHAFT	24-33,24-88
SEAL - DESCRIPTION, SPARK PLUG TUBE	9-32
SEAL - FRONT - INSTALLATION, CRANKSHAFT OIL	9-114,9-192,9-47
SEAL - FRONT - REMOVAL, CRANKSHAFT OIL	9-114,9-192,9-47
SEAL - INSTALLATION, AXLE	21-118,21-48
SEAL - INSTALLATION, SPARK PLUG TUBE	9-32
SEAL - INSTALLATION, SUNROOF GLASS PANEL	23-87
SEAL - OIL PUMP - INSTALLATION	21-265
SEAL - OIL PUMP - REMOVAL	21-265
SEAL - REAR - INSTALLATION, CRANKSHAFT OIL	9-115,9-193,9-47
SEAL - REAR - REMOVAL, CRANKSHAFT OIL	9-115,9-193,9-47
SEAL - REMOVAL, AXLE	21-118,21-48
SEAL - REMOVAL, SPARK PLUG TUBE	9-32
SEAL - REMOVAL, SUNROOF GLASS PANEL	23-87
SEAL BOOT - INSTALLATION, LOWER BALL JOINT	2-12
SEAL BOOT - REMOVAL, LOWER BALL JOINT	2-12
SEALERS - STANDARD PROCEDURE, FORM-IN-PLACE GASKETS	9-11,9-158,9-82
SEALING LOCATIONS - SPECIFICATIONS, BODY	23-99
SEAL(S) - INSTALLATION, CAMSHAFT OIL	9-101,9-179
SEALS - INSTALLATION, SHIFT SHAFT	21-147
SEAL(S) - REMOVAL, CAMSHAFT OIL	9-100, 9-179
SEALS - REMOVAL, SHIFT SHAFT	21-147
SEALS (CYLINDER HEAD REMOVED) - INSPECTION, VALVE SPRINGS	9-39
SEALS (CYLINDER HEAD REMOVED) - STANDARD PROCEDURE, VALVE SPRINGS	9-39
SEALS (ON VEHICLE SERVICE) - STANDARD PROCEDURE, VALVE SPRINGS	9-37
SEAT - INSTALLATION, FRONT	23-68
SEAT - INSTALLATION, REAR	23-70
SEAT - REMOVAL, FRONT	23-68
SEAT - REMOVAL, REAR	23-70
SEAT AIRBAG - DESCRIPTION	8O-16
SEAT AIRBAG - INSTALLATION	8O-18
SEAT AIRBAG - OPERATION	8O-17
SEAT AIRBAG - REMOVAL	8O-17
SEAT BACK - INSTALLATION, FRONT	23-69
SEAT BACK - INSTALLATION, REAR	23-71
SEAT BACK - REMOVAL, FRONT	23-69
SEAT BACK - REMOVAL, REAR	23-71
SEAT BACK COVER - INSTALLATION, FRONT	23-69
SEAT BACK COVER - INSTALLATION, REAR	23-71
SEAT BACK COVER - REMOVAL, FRONT	23-69
SEAT BACK COVER - REMOVAL, REAR	23-71
SEAT BACK CUSHION / COVER - INSTALLATION, REAR	23-72
SEAT BACK CUSHION / COVER - REMOVAL, REAR	23-71
SEAT BELT & RETRACTOR - INSTALLATION, FRONT	8O-11
SEAT BELT & RETRACTOR - INSTALLATION, REAR	8O-16
SEAT BELT & RETRACTOR - INSTALLATION, REAR CENTER	8O-16
SEAT BELT & RETRACTOR - REMOVAL, FRONT	8O-11
SEAT BELT & RETRACTOR - REMOVAL, REAR	8O-16
SEAT BELT & RETRACTOR - REMOVAL, REAR CENTER	8O-16
SEAT BELT BUCKLE - INSTALLATION, FRONT	8O-11
SEAT BELT BUCKLE - REMOVAL, FRONT	8O-11
SEAT BELT BUCKLE - REMOVAL, REAR	8O-16
SEAT BELT HEIGHT ADJUSTER - INSTALLATION, FRONT	8O-12
SEAT BELT HEIGHT ADJUSTER - REMOVAL, FRONT	8O-12
SEAT BELTS - DIAGNOSIS AND TESTING, FASTEN	8B-2
SEAT CUSHION - INSTALLATION, FRONT	23-70
SEAT CUSHION - INSTALLATION, REAR	23-71
SEAT CUSHION - REMOVAL, FRONT	23-70
SEAT CUSHION - REMOVAL, REAR	23-71
SEAT CUSHION COVER - INSTALLATION, FRONT	23-70
SEAT CUSHION COVER - REMOVAL, FRONT	23-70
SEAT ELEMENT - DESCRIPTION, HEATED	8G-5
SEAT ELEMENT - DIAGNOSIS AND TESTING, HEATED	8G-6
SEAT ELEMENT - INSTALLATION, HEATED	8G-6
SEAT ELEMENT - OPERATION, HEATED	8G-6
SEAT ELEMENT - REMOVAL, HEATED	8G-6
SEAT HEAD RESTRAINT - INSTALLATION, FRONT	23-70
SEAT HEAD RESTRAINT - REMOVAL, FRONT	23-70
SEAT MODULE - DESCRIPTION, HEATED	8E-3
SEAT MODULE - DIAGNOSIS AND TESTING, HEATED	8E-4
SEAT MODULE - INSTALLATION, HEATED	8E-5
SEAT MODULE - OPERATION, HEATED	8E-4
SEAT MODULE - REMOVAL, HEATED	8E-5

Description	Group-Page
SEAT PIVOT BEZEL - INSTALLATION, REAR	23-72
SEAT PIVOT BEZEL - REMOVAL, REAR	23-72
SEAT REFACING - STANDARD PROCEDURE, VALVE AND VALVE	9-40
SEAT RELAY - DESCRIPTION, HEATED	8G-7
SEAT RELAY - INSTALLATION, HEATED	8G-8
SEAT RELAY - OPERATION, HEATED	8G-7
SEAT RELAY - REMOVAL, HEATED	8G-7
SEAT SENSOR - DESCRIPTION, HEATED	8G-8
SEAT SENSOR - DIAGNOSIS AND TESTING, HEATED	8G-8
SEAT SENSOR - OPERATION, HEATED	8G-8
SEAT SENSOR - REMOVAL, HEATED	8G-8
SEAT STORAGE BIN - INSTALLATION, UNDER	23-72
SEAT STORAGE BIN - REMOVAL, UNDER	23-72
SEAT SWITCH - DESCRIPTION, DRIVER	8N-13
SEAT SWITCH - DESCRIPTION, DRIVER HEATED	8G-4
SEAT SWITCH - DESCRIPTION, PASSENGER HEATED	8G-8
SEAT SWITCH - DIAGNOSIS AND TESTING, DRIVER	8N-13
SEAT SWITCH - DIAGNOSIS AND TESTING, DRIVER HEATED	8G-4
SEAT SWITCH - DIAGNOSIS AND TESTING, PASSENGER HEATED	8G-9
SEAT SWITCH - INSTALLATION, DRIVER	8N-14
SEAT SWITCH - INSTALLATION, DRIVER HEATED	8G-5
SEAT SWITCH - INSTALLATION, PASSENGER HEATED	8G-9
SEAT SWITCH - OPERATION, DRIVER	8N-13
SEAT SWITCH - OPERATION, DRIVER HEATED	8G-4
SEAT SWITCH - OPERATION, PASSENGER HEATED	8G-8
SEAT SWITCH - REMOVAL, DRIVER	8N-14
SEAT SWITCH - REMOVAL, DRIVER HEATED	8G-5
SEAT SWITCH - REMOVAL, PASSENGER HEATED	8G-9
SEAT SYSTEM - DESCRIPTION, HEATED	8G-1
SEAT SYSTEM - DESCRIPTION, POWER	8N-12
SEAT SYSTEM - DIAGNOSIS AND TESTING, HEATED	8G-2
SEAT SYSTEM - DIAGNOSIS AND TESTING, POWER	8N-13
SEAT SYSTEM - OPERATION, HEATED	8G-2
SEAT SYSTEM - OPERATION, POWER	8N-12
SEAT TETHER ANCHOR BEZEL - INSTALLATION, CHILD	23-73
SEAT TETHER ANCHOR BEZEL - REMOVAL, CHILD	23-73
SEAT TRACK - DESCRIPTION, POWER	8N-14
SEAT TRACK - DIAGNOSIS AND TESTING, POWER	8N-14
SEAT TRACK - INSTALLATION, POWER	8N-15
SEAT TRACK - OPERATION, POWER	8N-14
SEAT TRACK - REMOVAL, POWER	8N-15
SEATS - CLEANING, INTAKE/EXHAUST VALVES	9-106,9-185
SEATS - DESCRIPTION, INTAKE/ EXHAUST VALVES	9-106,9-185
SEATS - OPERATION, INTAKE/EXHAUST VALVES	9-106,9-185
SECONDARY WEATHERSTRIP - INSTALLATION, FRONT AND REAR DOOR UPPER	23-90
SECONDARY WEATHERSTRIP - INSTALLATION, SILL	23-93
SECONDARY WEATHERSTRIP - REMOVAL, FRONT AND REAR DOOR UPPER	23-90
SECONDARY WEATHERSTRIP - REMOVAL, SILL	23-93
SECTION IDENTIFICATION AND INFORMATION - DESCRIPTION	8W-01-6
SECURITY - DESCRIPTION, VEHICLE THEFT	8Q-1
SECURITY - OPERATION, VEHICLE THEFT	8Q-2
SELECTION, ADJUSTMENTS - DIFFERENTIAL BEARING PRELOAD ADJUSTMENT / SHIM	21-124
SELECTOR SHAFT - INSTALLATION, SHIFT	21-146
SELECTOR SHAFT - REMOVAL, SHIFT	21-146
SELECTOR SHAFT BUSHING - INSTALLATION, SHIFT	21-147
SELECTOR SHAFT BUSHING - REMOVAL, SHIFT	21-146
SELF-DIAGNOSTICS - STANDARD PROCEDURE	8J-4
SENDING UNIT / SENSOR - DESCRIPTION, FUEL LEVEL	14-4
SENDING UNIT / SENSOR - INSTALLATION, FUEL LEVEL	14-5
SENDING UNIT / SENSOR - OPERATION, FUEL LEVEL	14-4
SENDING UNIT / SENSOR - REMOVAL, FUEL LEVEL	14-4
SENSE - PCM INPUT - OPERATION, IGNITION	8E-5
SENSITIVE DEVICES - STANDARD PROCEDURE, ELECTROSTATIC DISCHARGE (ESD)	8W-01-8
SENSOR - 1.6L - DESCRIPTION, ACCELERATOR PEDAL POSITION	14-27
SENSOR - DESCRIPTION, AMBIENT TEMP	8M-5
SENSOR - DESCRIPTION, CAMSHAFT POSITION	8I-4
SENSOR - DESCRIPTION, CRANKSHAFT POSITION	14-28
SENSOR - DESCRIPTION, ENGINE COOLANT TEMP	7-20
SENSOR - DESCRIPTION, ENGINE COOLANT TEMPERATURE	7-49
SENSOR - DESCRIPTION, FRONT WHEEL SPEED	5-78
SENSOR - DESCRIPTION, FUEL LEVEL SENDING UNIT	14-4
SENSOR - DESCRIPTION, HEATED SEAT	8G-8
SENSOR - DESCRIPTION, INLET AIR TEMPERATURE	14-38
SENSOR - DESCRIPTION, KNOCK	8I-11
SENSOR - DESCRIPTION, MAP	14-39
SENSOR - DESCRIPTION, O2	14-40
SENSOR - DESCRIPTION, REAR WHEEL SPEED	5-80
SENSOR - DESCRIPTION, THROTTLE POSITION	14-49
SENSOR - DESCRIPTION, TRANSMISSION RANGE	21-285
SENSOR - DIAGNOSIS AND TESTING, AMBIENT TEMPERATURE	8M-5
SENSOR - DIAGNOSIS AND TESTING, HEATED SEAT	8G-8
SENSOR - EXPORT - DESCRIPTION, INTRUSION	8Q-5
SENSOR - EXPORT - INSTALLATION, DOME LAMP UNIT WITH INTRUSION	8L-31
SENSOR - EXPORT - INSTALLATION, DOME LAMP WITH INTRUSION	8L-30
SENSOR - EXPORT - INSTALLATION, INTRUSION	8Q-6
SENSOR - EXPORT - OPERATION, INTRUSION	8Q-5
SENSOR - EXPORT - REMOVAL, DOME LAMP UNIT WITH INTRUSION	8L-30
SENSOR - EXPORT - REMOVAL, DOME LAMP WITH INTRUSION	8L-30
SENSOR - EXPORT - REMOVAL, INTRUSION	8Q-5
SENSOR - INPUT - DESCRIPTION, SPEED	21-274
SENSOR - INPUT - INSTALLATION, SPEED	21-276
SENSOR - INPUT - OPERATION, SPEED	21-274
SENSOR - INPUT - REMOVAL, SPEED	21-275
SENSOR - INSTALLATION, AMBIENT TEMP	8M-6
SENSOR - INSTALLATION, ENGINE COOLANT TEMP	7-20
SENSOR - INSTALLATION, ENGINE COOLANT TEMPERATURE	7-50
SENSOR - INSTALLATION, FRONT WHEEL SPEED	5-80
SENSOR - INSTALLATION, FUEL LEVEL SENDING UNIT	14-5
SENSOR - INSTALLATION, INLET AIR TEMPERATURE	14-38
SENSOR - INSTALLATION, REAR WHEEL SPEED	5-82
SENSOR - INSTALLATION, THROTTLE POSITION	14-50
SENSOR - OPERATION, AMBIENT TEMP	8M-5
SENSOR - OPERATION, BATTERY TEMPERATURE	8F-25
SENSOR - OPERATION, CAMSHAFT POSITION	8I-4
SENSOR - OPERATION, CRANKSHAFT POSITION	14-28
SENSOR - OPERATION, ENGINE COOLANT TEMP	7-20
SENSOR - OPERATION, ENGINE COOLANT TEMPERATURE	7-49
SENSOR - OPERATION, FRONT WHEEL SPEED	5-78
SENSOR - OPERATION, FUEL LEVEL SENDING UNIT	14-4
SENSOR - OPERATION, HEATED SEAT	8G-8
SENSOR - OPERATION, INLET AIR TEMPERATURE	14-38
SENSOR - OPERATION, KNOCK	8I-11
SENSOR - OPERATION, MAP	14-39
SENSOR - OPERATION, O2	14-40
SENSOR - OPERATION, REAR WHEEL SPEED	5-81
SENSOR - OPERATION, THROTTLE POSITION	14-49
SENSOR - OPERATION, TRANSMISSION RANGE	21-286
SENSOR - OUTPUT - DESCRIPTION, SPEED	21-276
SENSOR - OUTPUT - INSTALLATION, SPEED	21-278
SENSOR - OUTPUT - OPERATION, SPEED	21-277
SENSOR - OUTPUT - REMOVAL, SPEED	21-277
SENSOR - REMOVAL, AMBIENT TEMP	8M-6
SENSOR - REMOVAL, ENGINE COOLANT TEMP	7-20
SENSOR - REMOVAL, ENGINE COOLANT TEMPERATURE	7-50
SENSOR - REMOVAL, FRONT WHEEL SPEED	5-79
SENSOR - REMOVAL, FUEL LEVEL SENDING UNIT	14-4
SENSOR - REMOVAL, HEATED SEAT	8G-8
SENSOR - REMOVAL, INLET AIR TEMPERATURE	14-38
SENSOR - REMOVAL, REAR WHEEL SPEED	5-81
SENSOR - REMOVAL, THROTTLE POSITION	14-49
SENSOR AIR GAP, SPECIFICATIONS - WHEEL SPEED	5-78
SENSOR, DESCRIPTION - VEHICLE SPEED	21-149
SENSOR RETURN - PCM INPUT - OPERATION	8E-5
SENSOR/SWITCH - DESCRIPTION, OIL PRESSURE	9-210
SENSOR/SWITCH - INSTALLATION, OIL PRESSURE	9-131,9-211
SENSOR/SWITCH - OPERATION, OIL PRESSURE	9-211
SENSOR/SWITCH - REMOVAL, OIL PRESSURE	9-131,9-211
SENTRY KEY IMMOBILIZER MODULE - DESCRIPTION	8E-15
SENTRY KEY IMMOBILIZER MODULE - INSTALLATION	8E-17
SENTRY KEY IMMOBILIZER MODULE - OPERATION	8E-16
SENTRY KEY IMMOBILIZER MODULE - REMOVAL	8E-16
SENTRY KEY IMMOBILIZER SYSTEM - DIAGNOSIS AND TESTING	8Q-2
SENTRY KEY IMMOBILIZER SYSTEM INITIALIZATION - STANDARD PROCEDURE	8E-16
SENTRY KEY IMMOBILIZER SYSTEM INITIALIZATION - STANDARD PROCEDURE	8Q-3
SERVICING - STANDARD PROCEDURE, COOLANT LEVEL	7-43
SERVICING REFRIGERANT OIL LEVEL - STANDARD PROCEDURE	24-104,24-49
SERVO - DESCRIPTION	8P-6
SERVO - OPERATION	8P-7

Description	Group-Page
SETTING - STANDARD PROCEDURE, PINION FACTOR	8E-10
SEVERAL LOADS - STANDARD PROCEDURE, TESTING FOR A SHORT TO GROUND ON FUSES POWERING	8W-01-9
SHAFT - ASSEMBLY, INPUT	21-140,21-72
SHAFT - ASSEMBLY, OUTPUT	21-80
SHAFT - ASSEMBLY, REVERSE	21-87
SHAFT - DESCRIPTION, HALF	3-1
SHAFT - DESCRIPTION, INPUT	21-69
SHAFT - DESCRIPTION, OUTPUT	21-77
SHAFT - DESCRIPTION, REVERSE	21-85
SHAFT - DISASSEMBLY, INPUT	21-137,21-70
SHAFT - DISASSEMBLY, OUTPUT	21-142,21-78
SHAFT - DISASSEMBLY, REVERSE	21-86
SHAFT - INSTALLATION, SHIFT CROSSOVER	21-145
SHAFT - INSTALLATION, SHIFT SELECTOR	21-146
SHAFT - OPERATION, HALF	3-2
SHAFT - REMOVAL, SHIFT CROSSOVER	21-145
SHAFT - REMOVAL, SHIFT SELECTOR	21-146
SHAFT / ROCKER ARM / LASH ADJUSTER - DESCRIPTION, ROCKER ARM	9-34
SHAFT / ROCKER ARM / LASH ADJUSTER - INSTALLATION, ROCKER ARM	9-35
SHAFT / ROCKER ARM / LASH ADJUSTER - REMOVAL, ROCKER ARM	9-34
SHAFT BUSHING - INSTALLATION, SHIFT CROSSOVER	21-145
SHAFT BUSHING - INSTALLATION, SHIFT SELECTOR	21-147
SHAFT BUSHING - REMOVAL, SHIFT CROSSOVER	21-145
SHAFT BUSHING - REMOVAL, SHIFT SELECTOR	21-146
SHAFT SEAL - DESCRIPTION, COMPRESSOR FRONT	24-33,24-88
SHAFT SEALS - INSTALLATION, SHIFT	21-147
SHAFT SEALS - REMOVAL, SHIFT	21-147
SHAFTS AND CARRIER ASSEMBLY - DESCRIPTION, BALANCE	9-232
SHAFTS AND CARRIER ASSEMBLY - INSTALLATION, BALANCE	9-233
SHAFTS AND CARRIER ASSEMBLY - OPERATION, BALANCE	9-232
SHAFTS AND CARRIER ASSEMBLY - REMOVAL, BALANCE	9-232
SHIELD - INSTALLATION, FRONT SIDE RAIL ACCESS PULLEY SPLASH	23-38
SHIELD - REMOVAL, FRONT SIDE RAIL ACCESS PULLEY SPLASH	23-38
SHIELDS - DESCRIPTION, HEAT	11-12
SHIELDS - INSTALLATION, FRONT WHEELHOUSE SPLASH	23-36
SHIELDS - INSTALLATION, HEAT	11-12
SHIELDS - REMOVAL, FRONT WHEELHOUSE SPLASH	23-36
SHIELDS - REMOVAL, HEAT	11-12
SHIFT BOOT - INSTALLATION, GEAR	21-127, 21-59
SHIFT BOOT - REMOVAL, GEAR	21-126,21-59
SHIFT CABLE - INSTALLATION, GEAR	21-130, 21-236,21-63
SHIFT CABLE - REMOVAL, GEAR	21-127,21-234, 21-59
SHIFT CROSSOVER LEVER - INSTALLATION	21-145
SHIFT CROSSOVER LEVER - REMOVAL	21-144
SHIFT CROSSOVER SHAFT - INSTALLATION	21-145
SHIFT CROSSOVER SHAFT - REMOVAL	21-145
SHIFT CROSSOVER SHAFT BUSHING - INSTALLATION	21-145
SHIFT CROSSOVER SHAFT BUSHING - REMOVAL	21-145
SHIFT INTERLOCK CABLE - INSTALLATION	21-267
SHIFT INTERLOCK CABLE - REMOVAL	21-265
SHIFT INTERLOCK MECHANISM - INSTALLATION	21-269
SHIFT INTERLOCK MECHANISM - REMOVAL	21-268
SHIFT INTERLOCK SYSTEM, ADJUSTMENTS - BRAKE/ TRANSMISSION	21-270
SHIFT KNOB - INSTALLATION, GEAR	21-134, 21-66
SHIFT KNOB - REMOVAL, GEAR	21-134,21-66
SHIFT MECHANISM - INSTALLATION, GEAR	21-134,21-68
SHIFT MECHANISM - REMOVAL, GEAR	21-134, 21-67
SHIFT RAIL AND FORK - DISASSEMBLY	21-146
SHIFT RAIL BUSHINGS - INSTALLATION	21-146
SHIFT RAIL BUSHINGS - REMOVAL	21-146
SHIFT SELECTOR SHAFT - INSTALLATION	21-146
SHIFT SELECTOR SHAFT - REMOVAL	21-146
SHIFT SELECTOR SHAFT BUSHING - INSTALLATION	21-147
SHIFT SELECTOR SHAFT BUSHING - REMOVAL	21-146
SHIFT SHAFT SEALS - INSTALLATION	21-147
SHIFT SHAFT SEALS - REMOVAL	21-147
SHIM SELECTION, ADJUSTMENTS - DIFFERENTIAL BEARING PRELOAD ADJUSTMENT	21-124
SHOCK ABSORBER - DESCRIPTION	2-41
SHOCK ABSORBER - DIAGNOSIS AND TESTING	2-41
SHOCK ABSORBER - INSTALLATION	2-41
SHOCK ABSORBER - REMOVAL	2-41
SHOES - ADJUSTMENT, DRUM BRAKE	5-23
SHOES - CLEANING, DISC BRAKE	5-16,5-18
SHOES - CLEANING, DRUM BRAKE	5-21
SHOES - INSPECTION, DISC BRAKE	5-16,5-19
SHOES - INSPECTION, DRUM BRAKE	5-21
SHOES - PARKING BRAKE - INSTALLATION	5-70
SHOES - PARKING BRAKE - REMOVAL	5-69
SHORT TO GROUND - STANDARD PROCEDURE, TESTING FOR A	8W-01-9
SHORT TO GROUND ON FUSES POWERING SEVERAL LOADS - STANDARD PROCEDURE, TESTING FOR A	8W-01-9
SHROUD - UPPER/LOWER - INSTALLATION	19-21
SHROUD - UPPER/LOWER - REMOVAL	19-21
SHUT DOWN RELAY - DESCRIPTION, AUTO	8I-3
SHUT DOWN RELAY - OPERATION, AUTO	8I-3
SIDE COWL TRIM PANEL - INSTALLATION	23-62
SIDE COWL TRIM PANEL - REMOVAL	23-62
SIDE IMPACT AIRBAG CONTROL MODULE - DESCRIPTION	8O-19
SIDE IMPACT AIRBAG CONTROL MODULE - INSTALLATION	8O-20
SIDE IMPACT AIRBAG CONTROL MODULE - OPERATION	8O-19
SIDE IMPACT AIRBAG CONTROL MODULE - REMOVAL	8O-19
SIDE MOLDINGS - INSTALLATION, BODY	23-41
SIDE MOLDINGS - REMOVAL, BODY	23-41
SIDE RAIL - INSTALLATION, LUGGAGE RACK	23-39
SIDE RAIL - REMOVAL, LUGGAGE RACK	23-39
SIDE RAIL ACCESS PULLEY SPLASH SHIELD - INSTALLATION, FRONT	23-38
SIDE RAIL ACCESS PULLEY SPLASH SHIELD - REMOVAL, FRONT	23-38
SIDE REPEATER LAMP - DIAGNOSIS AND TESTING	8L-26
SIDE REPEATER LAMP - EXPORT - INSTALLATION	8L-26
SIDE REPEATER LAMP - EXPORT - REMOVAL	8L-26
SIDE REPEATER LAMP UNIT - EXPORT - INSTALLATION	8L-26
SIDE REPEATER LAMP UNIT - EXPORT - REMOVAL	8L-26
SIDE VIEW MIRROR - INSTALLATION	23-40
SIDE VIEW MIRROR - REMOVAL	23-40
SIDE VIEW MIRROR GLASS - INSTALLATION	23-41
SIDE VIEW MIRROR GLASS - REMOVAL	23-41
SIDE VIEW MIRROR TRIM BEZEL - INSTALLATION	23-25
SIDE VIEW MIRROR TRIM BEZEL - REMOVAL	23-25
SIGNAL LAMP - INSTALLATION, PARK/TURN	8L-25
SIGNAL LAMP - REMOVAL, PARK/TURN	8L-25
SILENCER PAD - INSTALLATION	23-45
SILENCER PAD - REMOVAL	23-45
SILL SECONDARY WEATHERSTRIP - INSTALLATION	23-93
SILL SECONDARY WEATHERSTRIP - REMOVAL	23-93
SILL TRIM - INSTALLATION, DOOR	23-63
SILL TRIM - REMOVAL, DOOR	23-63
SIREN - EXPORT - DESCRIPTION	8Q-7
SIREN - EXPORT - INSTALLATION	8Q-8
SIREN - EXPORT - OPERATION	8Q-7
SIREN - EXPORT - REMOVAL	8Q-7
SKIS INDICATOR LAMP - DESCRIPTION	8Q-7
SKIS INDICATOR LAMP - OPERATION	8Q-7
SLAVE CYLINDER - DESCRIPTION	6-32
SLEEVE - INSTALLATION, INPUT BEARING	21-136
SLEEVE - REMOVAL, INPUT BEARING	21-136
SOHC - DESCRIPTION, ACCESSORY DRIVE - 1.6L	7-3
SOHC - DESCRIPTION, ENGINE - 1.6L	7-13
SOHC - DESCRIPTION, ENGINE 1.6L	9-3
SOHC - OPERATION, ENGINE - 1.6L	7-13
SOHC - TORQUE, 1.6L	7-1
SOHC ENGINE, SPECIAL TOOLS - 1.6L	9-21
SOHC ENGINE, SPECIFICATIONS - 1.6L	9-17
SOLENOID - DESCRIPTION, EVAP/PURGE	25-13
SOLENOID - OPERATION, EVAP/PURGE	25-13
SOLENOID/PRESSURE SWITCH ASSY - DESCRIPTION	21-271
SOLENOID/PRESSURE SWITCH ASSY - INSTALLATION	21-273
SOLENOID/PRESSURE SWITCH ASSY - OPERATION	21-271
SOLENOID/PRESSURE SWITCH ASSY - REMOVAL	21-272
SOLENOIDS AND VACUUM HARNESS - DESCRIPTION	11-25
SOLENOIDS AND VACUUM HARNESS - INSTALLATION	11-26
SOLENOIDS AND VACUUM HARNESS - REMOVAL	11-25
SPARE TIRE (TEMPORARY) - DESCRIPTION	22-9
SPARK PLUG CABLE - DESCRIPTION	8I-14
SPARK PLUG CABLE RESISTANCE, SPECIFICATIONS	8I-3
SPARK PLUG TUBE - INSTALLATION	9-33
SPARK PLUG TUBE - REMOVAL	9-33
SPARK PLUG TUBE SEAL - DESCRIPTION	9-32
SPARK PLUG TUBE SEAL - INSTALLATION	9-32
SPARK PLUG TUBE SEAL - REMOVAL	9-32
SPARK PLUGS, SPECIFICATIONS	8I-3
SPEAKER - INSTALLATION	8A-12
SPEAKER - REMOVAL	8A-11
SPEED CONTROL - DESCRIPTION	8P-1
SPEED CONTROL (4 SPEED EATX ONLY) - OPERATION, INTERACTIVE	8P-2
SPEED OPERATION - STANDARD PROCEDURE, TIRE PRESSURE FOR HIGH	22-10
SPEED SENSOR - DESCRIPTION, FRONT WHEEL	5-78
SPEED SENSOR - DESCRIPTION, REAR WHEEL	5-80
SPEED SENSOR - INPUT - DESCRIPTION	21-274
SPEED SENSOR - INPUT - INSTALLATION	21-276
SPEED SENSOR - INPUT - OPERATION	21-274
SPEED SENSOR - INPUT - REMOVAL	21-275
SPEED SENSOR - INSTALLATION, FRONT WHEEL	5-80
SPEED SENSOR - INSTALLATION, REAR WHEEL	5-82
SPEED SENSOR - OPERATION, FRONT WHEEL	5-78
SPEED SENSOR - OPERATION, REAR WHEEL	5-81
SPEED SENSOR - OUTPUT - DESCRIPTION	21-276
SPEED SENSOR - OUTPUT - INSTALLATION	21-278
SPEED SENSOR - OUTPUT - OPERATION	21-277
SPEED SENSOR - OUTPUT - REMOVAL	21-277

Description	Group-Page
SPEED SENSOR - REMOVAL, FRONT WHEEL	5-79
SPEED SENSOR - REMOVAL, REAR WHEEL	5-81
SPEED SENSOR AIR GAP, SPECIFICATIONS - WHEEL	5-78
SPEED SENSOR, DESCRIPTION - VEHICLE	21-149
SPINDLE - INSTALLATION	2-43
SPINDLE - REMOVAL	2-42
SPIRAL PLATE BATTERY CHARGING - STANDARD PROCEDURE	8F-8
SPLASH SHIELD - INSTALLATION, FRONT SIDE RAIL ACCESS PULLEY	23-38
SPLASH SHIELD - REMOVAL, FRONT SIDE RAIL ACCESS PULLEY	23-38
SPLASH SHIELDS - INSTALLATION, FRONT WHEELHOUSE	23-36
SPLASH SHIELDS - REMOVAL, FRONT WHEELHOUSE	23-36
SPLICE INFORMATION - DESCRIPTION, CONNECTOR, GROUND	8W-01-7
SPLICING - STANDARD PROCEDURE, WIRE	8W-01-15
SPRING - DESCRIPTION	2-44
SPRING - DESCRIPTION, CLOCK	8O-5
SPRING - INSTALLATION	2-45
SPRING - INSTALLATION, CLOCK	8O-7
SPRING - OPERATION, CLOCK	8O-6
SPRING - REMOVAL	2-44
SPRING - REMOVAL, CLOCK	8O-6
SPRING CENTERING - STANDARD PROCEDURE, CLOCK	8O-6
SPRINGS AND SEALS (CYLINDER HEAD REMOVED) - INSPECTION, VALVE	9-39
SPRINGS AND SEALS (CYLINDER HEAD REMOVED) - STANDARD PROCEDURE, VALVE	9-39
SPRINGS AND SEALS (ON VEHICLE SERVICE) - STANDARD PROCEDURE, VALVE	9-37
SPROCKET - INSTALLATION, CAMSHAFT	9-69
SPROCKET - INSTALLATION, CRANKSHAFT	9-146,9-228,9-69
SPROCKET - REMOVAL, CAMSHAFT	9-68
SPROCKET - REMOVAL, CRANKSHAFT	9-145, 9-228,9-69
SPROCKETS - INSTALLATION, CAMSHAFT	9-146
SPROCKET(S) - INSTALLATION, CAMSHAFT	9-229
SPROCKET(S) - REMOVAL, CAMSHAFT	9-145, 9-227
STABILIZER BAR - DESCRIPTION	2-19,2-47
STABILIZER BAR - INSPECTION	2-19
STABILIZER BAR - INSTALLATION	2-19,2-47
STABILIZER BAR - OPERATION	2-19,2-47
STABILIZER BAR - REMOVAL	2-19,2-47
STABILIZER BAR CUSHIONS - INSTALLATION	2-48
STABILIZER BAR CUSHIONS - REMOVAL	2-47
STABILIZER BAR LINK - INSTALLATION	2-48
STABILIZER BAR LINK - REMOVAL	2-48
STAKING - STANDARD PROCEDURE, HEAT	23-10
STARTER 2.4L TURBO - INSTALLATION	8F-45
STARTER 2.4L TURBO - REMOVAL	8F-42
STARTER MOTOR, SPECIFICATIONS	8F-39
STARTING - DESCRIPTION	8F-34
STARTING - OPERATION	8F-34
STARTING - STANDARD PROCEDURE, JUMP	0-14
STARTING SYSTEM TEST - DIAGNOSIS AND TESTING	8F-34
STATE DISPLAY TEST MODE, OPERATION - DRB III®	25-10
STEERING - DIAGNOSIS AND TESTING, SUSPENSION	2-55
STEERING COLUMN - DIAGNOSIS AND TESTING	19-11
STEERING COLUMN FASTENER TORQUE - SPECIFICATIONS	19-18
STEERING COLUMN LOWER COUPLING - DIAGNOSIS AND TESTING	19-22
STEERING COLUMN OPENING COVER - INSTALLATION	23-59
STEERING COLUMN OPENING COVER - REMOVAL	23-59
STEERING COUPLING - LOWER - DESCRIPTION	19-21
STEERING COUPLING - LOWER - INSTALLATION	19-25
STEERING COUPLING - LOWER - OPERATION	19-21
STEERING COUPLING - LOWER - REMOVAL	19-22
STEERING DIAGNOSIS CHARTS - DIAGNOSIS AND TESTING	19-3
STEERING FASTENER TORQUE - SPECIFICATIONS, POWER	19-8
STEERING FLOW AND PRESSURE TEST - DIAGNOSIS AND TESTING, POWER	19-1
STEERING FLUID LEVEL CHECKING - STANDARD PROCEDURE, POWER	19-46
STEERING KNUCKLE - DESCRIPTION	2-6
STEERING KNUCKLE - DIAGNOSIS AND TESTING	2-6
STEERING KNUCKLE - INSTALLATION	2-11
STEERING KNUCKLE - OPERATION	2-6
STEERING KNUCKLE - REMOVAL	2-6
STEERING KNUCKLE (WHEEL BEARING AND HUB) - ASSEMBLY	2-10
STEERING KNUCKLE (WHEEL BEARING AND HUB) - DISASSEMBLY	2-8
STEERING PRESSURE SWITCH - DESCRIPTION, POWER	19-34
STEERING PRESSURE SWITCH - INSTALLATION, POWER	19-35
STEERING PRESSURE SWITCH - OPERATION, POWER	19-34
STEERING PRESSURE SWITCH - REMOVAL, POWER	19-34
STEERING PUMP ASSEMBLY - ASSEMBLY, WATER PUMP/POWER	7-29
STEERING PUMP ASSEMBLY - DESCRIPTION, WATER PUMP/POWER	7-27
STEERING PUMP ASSEMBLY - DISASSEMBLY, WATER PUMP/POWER	7-28
STEERING PUMP ASSEMBLY - INSTALLATION, WATER PUMP/POWER	7-30
STEERING PUMP ASSEMBLY - REMOVAL, WATER PUMP/POWER	7-28
STEERING PUMP INITIAL OPERATION - STANDARD PROCEDURE, POWER	19-38
STEERING, SPECIAL TOOLS - POWER	19-9
STEERING SYSTEM - DESCRIPTION, POWER	19-1
STEERING SYSTEM - OPERATION, POWER	19-1
STEERING WHEEL - INSTALLATION	19-26
STEERING WHEEL - REMOVAL	19-26
STOP LAMP - INSTALLATION, CENTER HIGH MOUNTED	8L-5
STOP LAMP - REMOVAL, CENTER HIGH MOUNTED	8L-5
STOP LAMP UNIT - INSTALLATION, CENTER HIGH MOUNTED	8L-6
STOP LAMP UNIT - REMOVAL, CENTER HIGH MOUNTED	8L-5
STORAGE BIN - INSTALLATION, UNDER SEAT	23-72
STORAGE BIN - REMOVAL, UNDER SEAT	23-72
STRAP - INSTALLATION, FRONT DOOR CHECK	23-20
STRAP - INSTALLATION, REAR DOOR CHECK	23-29
STRAP - REMOVAL, FRONT DOOR CHECK	23-20
STRAP - REMOVAL, REAR DOOR CHECK	23-29
STRIKER - INSTALLATION, FRONT DOOR LATCH	23-24
STRIKER - INSTALLATION, HOOD LATCH	23-45
STRIKER - INSTALLATION, LATCH	23-15
STRIKER - INSTALLATION, REAR DOOR LATCH	23-32
STRIKER - REMOVAL, FRONT DOOR LATCH	23-24
STRIKER - REMOVAL, HOOD LATCH	23-45
STRIKER - REMOVAL, LATCH	23-15
STRIKER - REMOVAL, REAR DOOR LATCH	23-32
STRUCTURAL ADHESIVES - SPECIFICATIONS	23-114
STRUCTURAL COLLAR - INSTALLATION	9-121, 9-200
STRUCTURAL COLLAR - REMOVAL	9-121,9-200
STRUT ADJUSTMENT, ADJUSTMENTS - ENGINE TORQUE	9-125,9-205
STRUT ASSEMBLY - ASSEMBLY	2-24
STRUT ASSEMBLY - DESCRIPTION	2-20
STRUT ASSEMBLY - DISASSEMBLY	2-21
STRUT ASSEMBLY - INSTALLATION	2-24
STRUT ASSEMBLY - OPERATION	2-20
STRUT ASSEMBLY - REMOVAL	2-20
STRUT ASSEMBLY (FRONT) - DIAGNOSIS AND TESTING	2-20
STRUTS - INSTALLATION, TORQUE	9-54
STRUTS - REMOVAL, TORQUE	9-53
STUDS - FRONT - INSTALLATION, WHEEL MOUNTING	22-15
STUDS - FRONT - REMOVAL, WHEEL MOUNTING	22-14
STUDS - REAR - INSTALLATION, WHEEL MOUNTING	22-16
STUDS - REAR - REMOVAL, WHEEL MOUNTING	22-16
SUCTION AND LIQUID LINE ASSEMBLY - INSTALLATION	24-109,24-53
SUCTION AND LIQUID LINE ASSEMBLY - REMOVAL	24-109,24-53
SUCTION LINE - DESCRIPTION	24-105,24-50
SUCTION LINE - INSTALLATION	24-108,24-52
SUCTION LINE - OPERATION	24-106,24-51
SUCTION LINE - REMOVAL	24-107,24-51
SUN VISOR - INSTALLATION	23-65
SUN VISOR - REMOVAL	23-65
SUNROOF - DESCRIPTION	23-81
SUNROOF - DIAGNOSIS AND TESTING	23-81
SUNROOF CONTROL SWITCH - INSTALLATION	23-85
SUNROOF CONTROL SWITCH - REMOVAL	23-85
SUNROOF DRIVE MOTOR - INSTALLATION	23-85
SUNROOF DRIVE MOTOR - REMOVAL	23-84
SUNROOF GLASS PANEL ADJUSTMENT, ADJUSTMENTS	23-86
SUNROOF GLASS PANEL SEAL - INSTALLATION	23-87
SUNROOF GLASS PANEL SEAL - REMOVAL	23-87
SUNROOF MODULE ASSEMBLY - INSTALLATION	23-83
SUNROOF MODULE ASSEMBLY - REMOVAL	23-83
SUNROOF SUNSHADE - INSTALLATION	23-87
SUNROOF SUNSHADE - REMOVAL	23-86
SUNROOF TROUGH GUIDE ASSEMBLY - INSTALLATION	23-88
SUNROOF TROUGH GUIDE ASSEMBLY - REMOVAL	23-87
SUNSHADE - INSTALLATION, SUNROOF	23-87
SUNSHADE - REMOVAL, SUNROOF	23-86
SUPPLY - PCM OUTPUT - OPERATION, 5 VOLT	8E-10
SUPPORT BRACKET - INSTALLATION, BATTERY TRAY	8F-22
SUPPORT BRACKET - REMOVAL, BATTERY TRAY	8F-22
SUPPORT BRACKETS AND ISOLATORS - INSTALLATION	11-11
SUPPORT BRACKETS AND ISOLATORS - REMOVAL	11-11
SUPPORT PLATE - DRUM BRAKES - INSTALLATION	5-59
SUPPORT PLATE - DRUM BRAKES - REMOVAL	5-58
SUPPORT ROD - INSTALLATION, LIFTGATE	23-17
SUPPORT ROD - REMOVAL, LIFTGATE	23-17
SUPPRESSION COMPONENTS - DESCRIPTION, RADIO NOISE	8A-8
SUPPRESSION COMPONENTS - INSTALLATION, RADIO NOISE	8A-11
SUPPRESSION COMPONENTS - OPERATION, RADIO NOISE	8A-8
SUPPRESSION COMPONENTS - REMOVAL, RADIO NOISE	8A-9
SURFACE PREPARATION - STANDARD PROCEDURE, ENGINE GASKET	9-12,9-159,9-83
SUSPENSION - DESCRIPTION, FRONT	2-2
SUSPENSION - DESCRIPTION, REAR	2-26
SUSPENSION - OPERATION, FRONT	2-2
SUSPENSION - OPERATION, REAR	2-26

Description	Group-Page
SUSPENSION AND STEERING - DIAGNOSIS AND TESTING	2-55
SUSPENSION FASTENER TORQUE, SPECIFICATIONS - FRONT	2-4
SUSPENSION FASTENER TORQUE, SPECIFICATIONS - REAR	2-28
SUSPENSION, SPECIAL TOOLS - FRONT	2-4
SUSPENSION, SPECIAL TOOLS - REAR	2-28
SWITCH - DESCRIPTION, A/C HIGH PRESSURE	24-18,24-74
SWITCH - DESCRIPTION, A/C LOW PRESSURE	24-19,24-75
SWITCH - DESCRIPTION, BRAKE LAMP	8L-3
SWITCH - DESCRIPTION, CLUTCH INTERLOCK/UPSTOP	6-12
SWITCH - DESCRIPTION, DEFOGGER	8G-11
SWITCH - DESCRIPTION, DRIVER HEATED SEAT	8G-4
SWITCH - DESCRIPTION, DRIVER SEAT	8N-13
SWITCH - DESCRIPTION, HEADLAMP	8L-18
SWITCH - DESCRIPTION, HORN	8H-4
SWITCH - DESCRIPTION, MULTI-FUNCTION	8L-19
SWITCH - DESCRIPTION, PASSENGER HEATED SEAT	8G-8
SWITCH - DESCRIPTION, POWER STEERING PRESSURE	19-34
SWITCH - DIAGNOSIS AND TESTING, A/C LOW PRESSURE CLUTCH CYCLING	24-19,24-75
SWITCH - DIAGNOSIS AND TESTING, BRAKE LAMP	8L-4
SWITCH - DIAGNOSIS AND TESTING, CLUTCH INTERLOCK/UPSTOP	6-13
SWITCH - DIAGNOSIS AND TESTING, DOOR LOCK	8N-3
SWITCH - DIAGNOSIS AND TESTING, DRIVER HEATED SEAT	8G-4
SWITCH - DIAGNOSIS AND TESTING, DRIVER SEAT	8N-13
SWITCH - DIAGNOSIS AND TESTING, FRONT WIPER/WASHER	8R-13
SWITCH - DIAGNOSIS AND TESTING, MULTI-FUNCTION	8L-20
SWITCH - DIAGNOSIS AND TESTING, PASSENGER HEATED SEAT	8G-9
SWITCH - DIAGNOSIS AND TESTING, POWER WINDOW	8N-18
SWITCH - DIAGNOSIS AND TESTING, REAR WIPER	8R-16
SWITCH - EXPORT - DESCRIPTION, HEADLAMP LEVELING	8L-17
SWITCH - EXPORT - DESCRIPTION, REAR FOG LAMP	8L-25
SWITCH - EXPORT - DIAGNOSIS AND TESTING, HEADLAMP LEVELING	8L-17
SWITCH - EXPORT - INSTALLATION, HEADLAMP LEVELING	8L-18
SWITCH - EXPORT - INSTALLATION, HOOD AJAR	8Q-5
SWITCH - EXPORT - OPERATION, HEADLAMP LEVELING	8L-17
SWITCH - EXPORT - OPERATION, REAR FOG LAMP	8L-25
SWITCH - EXPORT - REMOVAL, HEADLAMP LEVELING	8L-17
SWITCH - EXPORT - REMOVAL, HOOD AJAR	8Q-5
SWITCH - INSTALLATION	8P-8
SWITCH - INSTALLATION, A/C HIGH PRESSURE	24-18,24-74
SWITCH - INSTALLATION, A/C LOW PRESSURE	24-19,24-75
SWITCH - INSTALLATION, BACK-UP LAMP	21-118
SWITCH - INSTALLATION, BACKUP LAMP	21-49
SWITCH - INSTALLATION, BRAKE FLUID LEVEL	5-10
SWITCH - INSTALLATION, BRAKE LAMP	8L-5
SWITCH - INSTALLATION, DOOR CYLINDER LOCK	8Q-4
SWITCH - INSTALLATION, DOOR LOCK	8N-4
SWITCH - INSTALLATION, DRIVER HEATED SEAT	8G-5
SWITCH - INSTALLATION, DRIVER SEAT	8N-14
SWITCH - INSTALLATION, FRONT WIPER	8R-13
SWITCH - INSTALLATION, IGNITION	19-19
SWITCH - INSTALLATION, LIFTGATE CYLINDER LOCK	8Q-6
SWITCH - INSTALLATION, MULTI-FUNCTION	8L-24
SWITCH - INSTALLATION, PASSENGER HEATED SEAT	8G-9
SWITCH - INSTALLATION, POWER STEERING PRESSURE	19-35
SWITCH - INSTALLATION, POWER WINDOW	8N-19
SWITCH - INSTALLATION, SUNROOF CONTROL	23-85
SWITCH - INSTALLATION, TRACTION CONTROL	5-83
SWITCH - LHD - DIAGNOSIS AND TESTING, POWER MIRROR	8N-9
SWITCH - LHD - INSTALLATION, POWER MIRROR	8N-9
SWITCH - LHD - REMOVAL, POWER MIRROR	8N-9
SWITCH - OPERATION, A/C LOW PRESSURE	24-19,24-75
SWITCH - OPERATION, BRAKE LAMP	8L-4
SWITCH - OPERATION, CLUTCH INTERLOCK/UPSTOP	6-13
SWITCH - OPERATION, DEFOGGER	8G-11
SWITCH - OPERATION, DRIVER HEATED SEAT	8G-4
SWITCH - OPERATION, DRIVER SEAT	8N-13
SWITCH - OPERATION, HEADLAMP	8L-18
SWITCH - OPERATION, HORN	8H-4
SWITCH - OPERATION, MULTI-FUNCTION	8L-20
SWITCH - OPERATION, PASSENGER HEATED SEAT	8G-8
SWITCH - OPERATION, POWER STEERING PRESSURE	19-34
SWITCH - REMOVAL	8P-8
SWITCH - REMOVAL, A/C HIGH PRESSURE	24-18,24-74
SWITCH - REMOVAL, A/C LOW PRESSURE	24-19,24-75
SWITCH - REMOVAL, BACK-UP LAMP	21-118
SWITCH - REMOVAL, BACKUP LAMP	21-48
SWITCH - REMOVAL, BRAKE FLUID LEVEL	5-10
SWITCH - REMOVAL, BRAKE LAMP	8L-4
SWITCH - REMOVAL, DOOR CYLINDER LOCK	8Q-4
SWITCH - REMOVAL, DOOR LOCK	8N-4
SWITCH - REMOVAL, DRIVER HEATED SEAT	8G-5
SWITCH - REMOVAL, DRIVER SEAT	8N-14
SWITCH - REMOVAL, FRONT WIPER	8R-13
SWITCH - REMOVAL, HORN	8H-4
SWITCH - REMOVAL, IGNITION	19-18
SWITCH - REMOVAL, LIFTGATE CYLINDER LOCK	8Q-6
SWITCH - REMOVAL, MULTI-FUNCTION	8L-24
SWITCH - REMOVAL, PASSENGER HEATED SEAT	8G-9
SWITCH - REMOVAL, POWER STEERING PRESSURE	19-34
SWITCH - REMOVAL, POWER WINDOW	8N-19
SWITCH - REMOVAL, REAR WIPER	8R-17
SWITCH - REMOVAL, SUNROOF CONTROL	23-85
SWITCH - REMOVAL, TRACTION CONTROL	5-83
SWITCH - RHD - DIAGNOSIS AND TESTING, POWER FOLDAWAY MIRROR	8N-10
SWITCH - RHD - INSTALLATION, POWER FOLDAWAY MIRROR	8N-11
SWITCH - RHD - REMOVAL, POWER FOLDAWAY MIRROR	8N-11
SWITCH ASSY - DESCRIPTION, SOLENOID/PRESSURE	21-271
SWITCH ASSY - INSTALLATION, SOLENOID/PRESSURE	21-273
SWITCH ASSY - OPERATION, SOLENOID/PRESSURE	21-271
SWITCH ASSY - REMOVAL, SOLENOID/PRESSURE	21-272
SWITCH BEZEL - INSTALLATION, ACCESSORY	23-46
SWITCH BEZEL - REMOVAL, ACCESSORY	23-46
SWITCH, DIAGNOSIS AND TESTING - REAR WINDOW DEFOGGER	8G-11
SYMBOLS - DESCRIPTION, INTERNATIONAL	Intro.-5
SYMBOLS - DESCRIPTION, INTERNATIONAL	0-1
SYNCHRONIZER - ASSEMBLY	21-91
SYNCHRONIZER - DESCRIPTION	21-90
SYNCHRONIZER - DISASSEMBLY	21-147,21-91
SYNCHRONIZER - INSPECTION	21-91
SYNCHRONIZER - INSTALLATION	21-91
SYNCHRONIZER - REMOVAL	21-91
T350 MANUAL TRANSAXLE - ASSEMBLY	21-108
T350 MANUAL TRANSAXLE - CLEANING	21-108
T350 MANUAL TRANSAXLE - DESCRIPTION	21-95
T350 MANUAL TRANSAXLE - DISASSEMBLY	21-101
T350 MANUAL TRANSAXLE - INSPECTION	21-108
T350 MANUAL TRANSAXLE - INSTALLATION	21-114
T350 MANUAL TRANSAXLE - REMOVAL	21-97
T350 MANUAL TRANSAXLE - SPECIAL TOOLS	21-116
T350 MANUAL TRANSAXLE - SPECIFICATIONS	21-115
TABLE, SPECIFICATIONS - A/C APPLICATION	24-10,24-66
TAIL LAMP - INSTALLATION	8L-26
TAIL LAMP - REMOVAL	8L-26
TAIL LAMP UNIT - INSTALLATION	8L-27
TAIL LAMP UNIT - REMOVAL	8L-27
TANK - DESCRIPTION, FUEL	14-14
TANK - INSTALLATION, FUEL	14-16
TANK - OPERATION, FUEL	14-14
TANK - REMOVAL, FUEL	14-15
TANK - STANDARD PROCEDURE, DRAINING FUEL	14-2
TANK FILLER TUBE - INSTALLATION, FUEL	14-17
TANK FILLER TUBE - REMOVAL, FUEL	14-16
TASK MANAGER - DESCRIPTION	25-22
TASK MANAGER - OPERATION	25-22
TD - INSTALLATION, 2.2L	6-12
TD - REMOVAL, 2.2L	6-11
TEMP SENSOR - DESCRIPTION, AMBIENT	8M-5
TEMP SENSOR - DESCRIPTION, ENGINE COOLANT	7-20
TEMP SENSOR - INSTALLATION, AMBIENT	8M-6
TEMP SENSOR - INSTALLATION, ENGINE COOLANT	7-20
TEMP SENSOR - OPERATION, AMBIENT	8M-5
TEMP SENSOR - OPERATION, ENGINE COOLANT	7-20
TEMP SENSOR - REMOVAL, AMBIENT	8M-6
TEMP SENSOR - REMOVAL, ENGINE COOLANT	7-20
TEMPERATURE CONTROL CABLES - INSTALLATION	24-24,24-80
TEMPERATURE CONTROL CABLES - REMOVAL	24-24,24-79
TEMPERATURE SENSOR - DESCRIPTION, ENGINE COOLANT	7-49
TEMPERATURE SENSOR - DESCRIPTION, INLET AIR	14-38
TEMPERATURE SENSOR - DIAGNOSIS AND TESTING, AMBIENT	8M-5
TEMPERATURE SENSOR - INSTALLATION, ENGINE COOLANT	7-50
TEMPERATURE SENSOR - INSTALLATION, INLET AIR	14-38
TEMPERATURE SENSOR - OPERATION, BATTERY	8F-25
TEMPERATURE SENSOR - OPERATION, ENGINE COOLANT	7-49
TEMPERATURE SENSOR - OPERATION, INLET AIR	14-38
TEMPERATURE SENSOR - REMOVAL, ENGINE COOLANT	7-50
TEMPERATURE SENSOR - REMOVAL, INLET AIR	14-38
TENSION, ADJUSTMENTS - BELT	7-11
TENSIONER - INSTALLATION, ACCESSORY DRIVE BELT	7-5
TENSIONER & PULLEY - INSTALLATION, TIMING BELT	9-148,9-231

Description	Group-Page
TENSIONER & PULLEY - REMOVAL, TIMING BELT	9-148,9-231
TENSIONER - REMOVAL, ACCESSORY DRIVE BELT	7-5
TENSIONER AND PULLEY - DESCRIPTION, AUTOMATIC BELT	7-11
TENSIONER AND PULLEY - INSTALLATION, AUTOMATIC BELT	7-11
TENSIONER AND PULLEY - REMOVAL, AUTOMATIC BELT	7-11
TERMINAL - INSTALLATION	8W-01-14
TERMINAL - REMOVAL	8W-01-14
TERMINAL REPAIR, STANDARD PROCEDURE - GRID LINE	8G-13
TETHER ANCHOR BEZEL - INSTALLATION, CHILD SEAT	23-73
TETHER ANCHOR BEZEL - REMOVAL, CHILD SEAT	23-73
THEFT SECURITY - DESCRIPTION, VEHICLE	8Q-1
THEFT SECURITY - OPERATION, VEHICLE	8Q-2
THERMAL GUARD - DESCRIPTION	8F-21
THERMAL GUARD - INSTALLATION	8F-21
THERMAL GUARD - OPERATION	8F-21
THERMAL GUARD - REMOVAL	8F-21
THERMOSTAT - DESCRIPTION, ENGINE COOLANT	7-50
THERMOSTAT - DIAGNOSIS AND TESTING, ENGINE COOLANT	7-51
THERMOSTAT - INSTALLATION, ENGINE COOLANT	7-51
THERMOSTAT - OPERATION, ENGINE COOLANT	7-51
THERMOSTAT - REMOVAL, ENGINE COOLANT	7-51
THERMOSTAT AND HOUSING - INSTALLATION, ENGINE COOLANT	7-20
THERMOSTAT AND HOUSING - REMOVAL, ENGINE COOLANT	7-20
THERMOSTAT HOUSING - INSTALLATION	7-58
THERMOSTAT HOUSING - REMOVAL	7-58
THREADED HOLE REPAIR - DESCRIPTION	Intro.-5
THREADS - STANDARD PROCEDURE, REPAIR OF DAMAGED OR WORN	9-11,9-158, 9-82
THROTTLE BODY - DESCRIPTION	14-44
THROTTLE BODY - OPERATION	14-44
THROTTLE CONTROL CABLE - INSTALLATION	14-48
THROTTLE CONTROL CABLE - REMOVAL	14-48
THROTTLE POSITION SENSOR - DESCRIPTION	14-49
THROTTLE POSITION SENSOR - INSTALLATION	14-50
THROTTLE POSITION SENSOR - OPERATION	14-49
THROTTLE POSITION SENSOR - REMOVAL	14-49
TIE ROD - OUTER - INSTALLATION	19-36
TIE ROD - OUTER - REMOVAL	19-35
TIMING - DESCRIPTION, VALVE	9-65
TIMING BELT - INSTALLATION	9-146,9-229
TIMING BELT - REMOVAL	9-143,9-227
TIMING BELT COVER(S) - INSTALLATION	9-143, 9-225
TIMING BELT COVER(S) - REMOVAL	9-142, 9-225
TIMING BELT TENSIONER & PULLEY - INSTALLATION	9-148,9-231
TIMING BELT TENSIONER & PULLEY - REMOVAL	9-148,9-231
TIMING CHAIN AND GUIDES - INSTALLATION	9-70
TIMING CHAIN AND GUIDES - REMOVAL	9-67
TIMING CHAIN COVER - INSTALLATION	9-66
TIMING CHAIN COVER - REMOVAL	9-65
TIMING VERIFICATION - STANDARD PROCEDURE, VALVE	9-142,9-65
TIRE - DESCRIPTION	22-7
TIRE AND WHEEL ASSEMBLY (ALUMINUM WHEEL) - INSTALLATION	22-7
TIRE AND WHEEL ASSEMBLY (ALUMINUM WHEEL) - REMOVAL	22-6
TIRE AND WHEEL ASSEMBLY (STEEL WHEEL) - INSTALLATION	22-7
TIRE AND WHEEL ASSEMBLY (STEEL WHEEL) - REMOVAL	22-6
TIRE AND WHEEL BALANCE - STANDARD PROCEDURE	22-3
TIRE AND WHEEL MATCH MOUNTING - STANDARD PROCEDURE	22-4
TIRE AND WHEEL ROTATION - STANDARD PROCEDURE	22-6
TIRE AND WHEEL RUNOUT - DIAGNOSIS AND TESTING	22-1
TIRE INFLATION PRESSURES - STANDARD PROCEDURE	22-10
TIRE LEAK REPAIRING - STANDARD PROCEDURE	22-10
TIRE NOISE OR VIBRATION - DIAGNOSIS AND TESTING	22-9
TIRE PRESSURE FOR HIGH SPEED OPERATION - STANDARD PROCEDURE	22-10
TIRE (TEMPORARY) - DESCRIPTION, SPARE	22-9
TIRE WEAR PATTERNS - DIAGNOSIS AND TESTING	22-9
TIRES - CLEANING	22-10
TIRES - DESCRIPTION, RADIAL-PLY	22-8
TIRES - DESCRIPTION, REPLACEMENT	22-8
TOGGLE - STANDARD PROCEDURE, HORN CHIRP	8N-6
TONE WHEEL - DESCRIPTION	5-82
TONE WHEEL - INSPECTION	5-82
TONE WHEEL - OPERATION	5-82
TONE WHEEL RUNOUT, SPECIFICATIONS	5-78
TOP COVER - INSTALLATION, INSTRUMENT PANEL	23-58
TOP COVER - REMOVAL, INSTRUMENT PANEL	23-57
TORQUE STRUT ADJUSTMENT, ADJUSTMENTS - ENGINE	9-125,9-205
TORQUE STRUTS - INSTALLATION	9-54
TORQUE STRUTS - REMOVAL	9-53
TORQUE, TURBOCHARGER COMPONENTS	11-5
TOUCH-UP - DESCRIPTION, PAINT	23-67
TOW EYE - INSTALLATION, FRONT EMERGENCY	13-13
TOW EYE - INSTALLATION, REAR EMERGENCY	13-13
TOW EYE - REMOVAL, FRONT EMERGENCY	13-13
TOW EYE - REMOVAL, REAR EMERGENCY	13-13
TOWING - STANDARD PROCEDURE	0-15
TRACK - DESCRIPTION, POWER SEAT	8N-14
TRACK - DIAGNOSIS AND TESTING, POWER SEAT	8N-14
TRACK - INSTALLATION, POWER SEAT	8N-15
TRACK - OPERATION, POWER SEAT	8N-14
TRACK - REMOVAL, POWER SEAT	8N-15
TRACTION CONTROL SWITCH - INSTALLATION	5-83
TRACTION CONTROL SWITCH - REMOVAL	5-83
TRACTION CONTROL SYSTEM - DESCRIPTION	5-74
TRACTION CONTROL SYSTEM - OPERATION	5-75
TRANS RANGE INDICATOR ILLUMINATION - INSTALLATION	8L-33
TRANS RANGE INDICATOR ILLUMINATION - REMOVAL	8L-33
TRANSAXLE - ASSEMBLY, T350 MANUAL	21-108
TRANSAXLE - CLEANING, T350 MANUAL	21-108
TRANSAXLE - DESCRIPTION, 41TE AUTOMATIC	21-151
TRANSAXLE - DESCRIPTION, G288 MANUAL	21-2
TRANSAXLE - DESCRIPTION, T350 MANUAL	21-95
TRANSAXLE - DISASSEMBLY, T350 MANUAL	21-101
TRANSAXLE - INSPECTION, T350 MANUAL	21-108
TRANSAXLE - INSTALLATION, PEDAL - WITH AUTOMATIC	5-43
TRANSAXLE - INSTALLATION, PEDAL - WITH MANUAL	5-44
TRANSAXLE - INSTALLATION, T350 MANUAL	21-114
TRANSAXLE - OPERATION, 41TE AUTOMATIC	21-153
TRANSAXLE - OPERATION, G288 MANUAL	21-5
TRANSAXLE - REMOVAL, PEDAL - WITH AUTOMATIC	5-42
TRANSAXLE - REMOVAL, PEDAL - WITH MANUAL	5-44
TRANSAXLE - REMOVAL, T350 MANUAL	21-97
TRANSAXLE - SPECIAL TOOLS, T350 MANUAL	21-116
TRANSAXLE - SPECIFICATIONS, T350 MANUAL	21-115
TRANSAXLE GENERAL DIAGNOSIS - DIAGNOSIS AND TESTING, 41TE	21-153
TRANSAXLE HOUSING - ASSEMBLY	21-93
TRANSAXLE HOUSING - DISASSEMBLY	21-92
TRANSAXLE HYDRAULIC SCHEMATICS, SCHEMATICS AND DIAGRAMS - 41TE	21-203
TRANSDUCER - DESCRIPTION, A/C PRESSURE	24-20,24-76
TRANSDUCER - DIAGNOSIS AND TESTING, A/C PRESSURE	24-20,24-76
TRANSDUCER - INSTALLATION, A/C PRESSURE	24-20,24-76
TRANSDUCER - OPERATION, A/C PRESSURE	24-20,24-76
TRANSDUCER - REMOVAL, A/C PRESSURE	24-20,24-76
TRANSMISSION CONTROL MODULE - DESCRIPTION	8E-17
TRANSMISSION CONTROL MODULE - INSTALLATION	8E-20
TRANSMISSION CONTROL MODULE - OPERATION	8E-17
TRANSMISSION CONTROL MODULE - REMOVAL	8E-20
TRANSMISSION CONTROL RELAY - DESCRIPTION	21-285
TRANSMISSION CONTROL RELAY - OPERATION	21-285
TRANSMISSION COOLER HOSES - DESCRIPTION	7-61
TRANSMISSION FLUID - DESCRIPTION	0-3
TRANSMISSION OIL COOLER - CLEANING, AUTOMATIC	7-62
TRANSMISSION OIL COOLER - DESCRIPTION, AUTOMATIC	7-61
TRANSMISSION OIL COOLER - INSPECTION, AUTOMATIC	7-63
TRANSMISSION OIL COOLER - INSTALLATION, AUTOMATIC	7-63
TRANSMISSION OIL COOLER - REMOVAL, AUTOMATIC	7-61
TRANSMISSION RANGE SENSOR - DESCRIPTION	21-285
TRANSMISSION RANGE SENSOR - OPERATION	21-286
TRANSMITTER - DESCRIPTION, REMOTE KEYLESS ENTRY	8N-6
TRANSMITTER - DIAGNOSIS AND TESTING, REMOTE KEYLESS ENTRY	8N-6
TRANSMITTER - OPERATION, REMOTE KEYLESS ENTRY	8N-6
TRANSMITTER BATTERIES - STANDARD PROCEDURE, RKE	8N-7
TRANSMITTER PROGRAMING - STANDARD PROCEDURE	8N-7
TRANSMITTER RANGE - SPECIFICATIONS	8N-7
TRANSPONDER KEY - DESCRIPTION	8Q-8
TRANSPONDER KEY - OPERATION	8Q-8
TRANSPONDER PROGRAMMING - STANDARD PROCEDURE	8Q-8
TRAY - DESCRIPTION, BATTERY	8F-20
TRAY - OPERATION, BATTERY	8F-20
TRAY SUPPORT BRACKET - INSTALLATION, BATTERY	8F-22
TRAY SUPPORT BRACKET - REMOVAL, BATTERY	8F-22
TREAD WEAR INDICATORS - DIAGNOSIS AND TESTING	22-9
TRIM - INSTALLATION, A-PILLAR	23-60
TRIM - INSTALLATION, B-PILLAR	23-60
TRIM - INSTALLATION, DOOR SILL	23-63
TRIM - INSTALLATION, UPPER C-PILLAR	23-63
TRIM - INSTALLATION, UPPER D-PILLAR	23-63
TRIM - REMOVAL, A-PILLAR	23-60
TRIM - REMOVAL, B-PILLAR	23-60
TRIM - REMOVAL, DOOR SILL	23-63

Description	Group-Page
TRIM - REMOVAL, UPPER C-PILLAR	23-63
TRIM - REMOVAL, UPPER D-PILLAR	23-63
TRIM BEZEL - INSTALLATION, SIDE VIEW MIRROR	23-25
TRIM BEZEL - REMOVAL, SIDE VIEW MIRROR	23-25
TRIM CARE, CLEANING - WHEEL AND WHEEL	22-13
TRIM LACE - INSTALLATION, OPENING	23-87
TRIM LACE - REMOVAL, OPENING	23-87
TRIM PANEL - INSTALLATION, FRONT DOOR	23-25
TRIM PANEL - INSTALLATION, LIFTGATE	23-18
TRIM PANEL - INSTALLATION, LOWER QUARTER	23-64
TRIM PANEL - INSTALLATION, REAR DOOR	23-33
TRIM PANEL - INSTALLATION, SIDE COWL	23-62
TRIM PANEL - REMOVAL, FRONT DOOR	23-25
TRIM PANEL - REMOVAL, LIFTGATE	23-18
TRIM PANEL - REMOVAL, LOWER QUARTER	23-64
TRIM PANEL - REMOVAL, REAR DOOR	23-32
TRIM PANEL - REMOVAL, SIDE COWL	23-62
TRIP DEFINITION - DESCRIPTION	25-5
TROUBLE CODES - STANDARD PROCEDURE, OBTAINING DIAGNOSTIC	8E-10
TROUGH - INSTALLATION, REAR BEARING OIL FEED	21-144
TROUGH - REMOVAL, REAR BEARING OIL FEED	21-144
TROUGH GUIDE ASSEMBLY - INSTALLATION, SUNROOF	23-88
TROUGH GUIDE ASSEMBLY - REMOVAL, SUNROOF	23-87
TUBE - DESCRIPTION, A/C VARIABLE ORIFICE	24-111,24-40,24-55
TUBE - DESCRIPTION, CONDENSATION DRAIN	24-42,24-97
TUBE - INSTALLATION, CONDENSATION DRAIN	24-43,24-97
TUBE - INSTALLATION, DRAIN	23-88
TUBE - INSTALLATION, FUEL TANK FILLER	14-17
TUBE - INSTALLATION, HEATER RETURN	7-27
TUBE - INSTALLATION, SPARK PLUG	9-33
TUBE - INSTALLATION, WATER PUMP INLET	7-60
TUBE - REMOVAL, CONDENSATION DRAIN	24-42,24-97
TUBE - REMOVAL, DRAIN	23-88
TUBE - REMOVAL, FUEL TANK FILLER	14-16
TUBE - REMOVAL, HEATER RETURN	7-27
TUBE - REMOVAL, SPARK PLUG	9-33
TUBE - REMOVAL, WATER PUMP INLET	7-60
TUBE SEAL - DESCRIPTION, SPARK PLUG	9-32
TUBE SEAL - INSTALLATION, SPARK PLUG	9-32
TUBE SEAL - REMOVAL, SPARK PLUG	9-32
TUBES AND HOSES - DESCRIPTION, BRAKE	5-15
TUBES AND HOSES - INSPECTION, BRAKE	5-15
TUBES AND HOSES - OPERATION, BRAKE	5-15
TUBING AND FITTINGS - STANDARD PROCEDURE, HANDLING	24-5,24-61
TURBO - DESCRIPTION, OIL COOLER & LINES - 2.4L	9-215
TURBO - DESCRIPTION, OIL JET - 2.4L	9-214
TURBO - INSTALLATION, 2.0, 2.4, 2.4L	14-30, 14-40
TURBO - INSTALLATION, 2.0, 2.4, AND 2.4L	8E-15
TURBO - INSTALLATION, 2.0, 2.4, AND 2.4L	8F-26
TURBO - INSTALLATION, 2.4L	25-14
TURBO - INSTALLATION, 2.4L	8F-32
TURBO - INSTALLATION, 2.4L	14-14,14-36, 14-43,14-48
TURBO - INSTALLATION, 2.4L	8I-11,8I-14
TURBO - INSTALLATION, 2.4L	8P-6,8P-8
TURBO - INSTALLATION, 2.4L	19-45,19-56, 19-59
TURBO - INSTALLATION, 2.4L	21-38
TURBO - INSTALLATION, OIL COOLER & LINES - 2.4L	9-215
TURBO - INSTALLATION, OIL JET - 2.4L	9-214
TURBO - INSTALLATION, STARTER 2.4L	8F-45
TURBO - REMOVAL, 2.0, 2.4, 2.4L	14-29,14-40
TURBO - REMOVAL, 2.0, 2.4, AND 2.4L	8E-12
TURBO - REMOVAL, 2.0, 2.4, AND 2.4L	8F-25
TURBO - REMOVAL, 2.4L	25-13
TURBO - REMOVAL, 2.4L	8F-28
TURBO - REMOVAL, 2.4L	14-10,14-32,14-42, 14-46
TURBO - REMOVAL, 2.4L	8I-11,8I-13,8I-9
TURBO - REMOVAL, 2.4L	8P-5,8P-7
TURBO - REMOVAL, 2.4L	19-42,19-53,19-58
TURBO - REMOVAL, 2.4L	21-17
TURBO - REMOVAL, OIL COOLER & LINES - 2.4L	9-215
TURBO - REMOVAL, OIL JET - 2.4L	9-214
TURBO - REMOVAL, STARTER 2.4L	8F-42
TURBO DIESEL - INSTALLATION, 2.2L	21-34
TURBO DIESEL - REMOVAL, 2.2L	21-13
TURBO ENGINE - DESCRIPTION, 2.0L/2.4L/2.4L	19-38
TURBO MODELS - INSTALLATION, DIESEL	6-34
TURBO MODELS - INSTALLATION, DIESEL	3-10
TURBO MODELS - INSTALLATION, EXCEPT DIESEL	3-8
TURBO MODELS - REMOVAL, DIESEL	6-34
TURBO MODELS - REMOVAL, DIESEL	3-6
TURBO MODELS - REMOVAL, EXCEPT DIESEL	3-4
TURBOCHARGER - DESCRIPTION	11-14
TURBOCHARGER - DIAGNOSIS AND TESTING	11-13
TURBOCHARGER - INSTALLATION	11-18
TURBOCHARGER - OPERATION	11-14
TURBOCHARGER - REMOVAL	11-15
TURBOCHARGER COMPONENTS - TORQUE	11-5
UNDER SEAT STORAGE BIN - INSTALLATION	23-72
UNDER SEAT STORAGE BIN - REMOVAL	23-72
UNIT - DESCRIPTION, ICU - INTEGRATED CONTROL	5-90
UNIT - EXPORT - INSTALLATION, SIDE REPEATER LAMP	8L-26
UNIT - EXPORT - REMOVAL, SIDE REPEATER LAMP	8L-26
UNIT - INSTALLATION, BACK-UP LAMP	8L-3
UNIT - INSTALLATION, CENTER HIGH MOUNTED STOP LAMP	8L-6
UNIT - INSTALLATION, DOME LAMP	8L-30
UNIT - INSTALLATION, FOG LAMP	8L-8
UNIT - INSTALLATION, HEATER	24-112
UNIT - INSTALLATION, ICU - INTEGRATED CONTROL	5-92
UNIT - INSTALLATION, LICENSE PLATE LAMP	8L-19
UNIT - INSTALLATION, REAR CARGO LAMP	8L-32
UNIT - INSTALLATION, TAIL LAMP	8L-27
UNIT - OPERATION, ICU - INTEGRATED CONTROL	5-90
UNIT - REMOVAL, BACK-UP LAMP	8L-3
UNIT - REMOVAL, CENTER HIGH MOUNTED STOP LAMP	8L-5
UNIT - REMOVAL, DOME LAMP	8L-30
UNIT - REMOVAL, FOG LAMP	8L-8
UNIT - REMOVAL, HEATER	24-112
UNIT - REMOVAL, ICU - INTEGRATED CONTROL	5-90
UNIT - REMOVAL, LICENSE PLATE LAMP	8L-19
UNIT - REMOVAL, REAR CARGO LAMP	8L-32
UNIT - REMOVAL, TAIL LAMP	8L-27
UNIT / SENSOR - DESCRIPTION, FUEL LEVEL SENDING	14-4
UNIT / SENSOR - INSTALLATION, FUEL LEVEL SENDING	14-5
UNIT / SENSOR - OPERATION, FUEL LEVEL SENDING	14-4
UNIT / SENSOR - REMOVAL, FUEL LEVEL SENDING	14-4
UNIT ALIGNMENT - EXPORT - STANDARD PROCEDURE, HEADLAMP	8L-13
UNIT ALIGNMENT - STANDARD PROCEDURE, FOG LAMP	8L-8
UNIT ALIGNMENT - STANDARD PROCEDURE, HEADLAMP	8L-12
UNIT (HCU) - DESCRIPTION, HYDRAULIC CONTROL	5-83
UNIT WITH INTRUSION SENSOR - EXPORT - INSTALLATION, DOME LAMP	8L-31
UNIT WITH INTRUSION SENSOR - EXPORT - REMOVAL, DOME LAMP	8L-30
UNLOCK - STANDARD PROCEDURE, DOUBLE ACTIVATION	8N-3
UPPER - INSTALLATION	9-125,9-204
UPPER - REMOVAL	9-124,9-204
UPPER C-PILLAR TRIM - INSTALLATION	23-63
UPPER C-PILLAR TRIM - REMOVAL	23-63
UPPER D-PILLAR TRIM - INSTALLATION	23-63
UPPER D-PILLAR TRIM - REMOVAL	23-63
UPPER INTAKE MANIFOLD - INSTALLATION	9-138,9-221,9-63
UPPER INTAKE MANIFOLD - REMOVAL	9-135, 9-216,9-63
UPPER SECONDARY WEATHERSTRIP - INSTALLATION, FRONT AND REAR DOOR	23-90
UPPER SECONDARY WEATHERSTRIP - REMOVAL, FRONT AND REAR DOOR	23-90
UPPER/LOWER - INSTALLATION, SHROUD	19-21
UPPER/LOWER - REMOVAL, SHROUD	19-21
UPSTREAM - INSTALLATION, 1/1	14-43
UPSTREAM - REMOVAL, 1/1	14-42
USAGE - DESCRIPTION, FASTENER	Intro.-5
USE WIRING DIAGRAMS - DESCRIPTION, HOW TO	8W-01-1
USING MICRO 420 BATTERY TESTER - STANDARD PROCEDURE	8F-11
USING PLASTIGAGE - STANDARD PROCEDURE, MEASURING BEARING CLEARANCE	9-13,9-160,9-84
VAC LEAK DETECTION ASSY - INSTALLATION, NATURAL	25-15
VAC LEAK DETECTION ASSY - REMOVAL, NATURAL	25-14
VACUUM CONTROL SYSTEM - DIAGNOSIS AND TESTING	24-13,24-69
VACUUM HARNESS - DESCRIPTION, SOLENOIDS	11-25
VACUUM HARNESS - INSTALLATION, SOLENOIDS	11-26
VACUUM HARNESS - REMOVAL, SOLENOIDS	11-25
VACUUM RESERVOIR - DESCRIPTION	8P-9
VACUUM RESERVOIR - INSTALLATION	8P-10
VACUUM RESERVOIR - OPERATION	8P-9
VACUUM RESERVOIR - REMOVAL	8P-9
VALVE - DESCRIPTION, PCV	25-18
VALVE - DESCRIPTION, PROPORTIONING	5-49
VALVE - DIAGNOSIS AND TESTING, PROPORTIONING	5-50
VALVE - INSTALLATION, HIGH PRESSURE RELIEF	24-40,24-95
VALVE - INSTALLATION, PROPORTIONING	5-52
VALVE - OPERATION, PCV	25-18
VALVE - OPERATION, PROPORTIONING	5-50
VALVE - REMOVAL, HIGH PRESSURE RELIEF	24-40,24-95
VALVE - REMOVAL, PROPORTIONING	5-52
VALVE AND VALVE SEAT REFACING - STANDARD PROCEDURE	9-40
VALVE BODY - ASSEMBLY	21-295
VALVE BODY - DESCRIPTION	21-287
VALVE BODY - DISASSEMBLY	21-291
VALVE BODY - INSTALLATION	21-300
VALVE BODY - OPERATION	21-287
VALVE BODY - REMOVAL	21-288
VALVE CORE - DESCRIPTION, SERVICE PORT	24-110,24-54
VALVE CORES - INSTALLATION, SERVICE PORT	24-111,24-55
VALVE CORES - REMOVAL, SERVICE PORT	24-111,24-55
VALVE SEAT REFACING - STANDARD PROCEDURE, VALVE	9-40
VALVE SPRINGS AND SEALS (CYLINDER HEAD REMOVED) - INSPECTION	9-39
VALVE SPRINGS AND SEALS (CYLINDER HEAD REMOVED) - STANDARD PROCEDURE	9-39

Description	Group-Page
VALVE SPRINGS AND SEALS (ON VEHICLE SERVICE) - STANDARD PROCEDURE	9-37
VALVE TIMING - DESCRIPTION	9-65
VALVE TIMING VERIFICATION - STANDARD PROCEDURE	9-142,9-65
VALVES - OPERATION, HYDRAULIC CIRCUITS	5-84
VALVES & SEATS - CLEANING, INTAKE/EXHAUST	9-106,9-185
VALVES & SEATS - DESCRIPTION, INTAKE/EXHAUST	9-106,9-185
VALVES & SEATS - OPERATION, INTAKE/EXHAUST	9-106,9-185
VANITY LAMP - INSTALLATION	8L-33
VANITY LAMP - REMOVAL	8L-33
VAPOR CANISTER - DESCRIPTION	25-19
VAPOR CANISTER - INSTALLATION	25-21
VAPOR CANISTER - OPERATION	25-19
VAPOR CANISTER - REMOVAL	25-20
VARIABLE BRAKE PROPORTIONING - DESCRIPTION, ELECTRONIC	5-74
VARIABLE BRAKE PROPORTIONING - OPERATION, ELECTRONIC	5-75
VARIABLE ORIFICE TUBE - DESCRIPTION, A/C	24-111,24-40,24-55
VARIATION ADJUSTMENT - STANDARD PROCEDURE, COMPASS	8M-3
VECI LABEL - DESCRIPTION	Intro.-10
VEHICLE DOES NOT FILL - DIAGNOSIS AND TESTING	25-17
VEHICLE EMISSION CONTROL INFORMATION LABEL - DESCRIPTION	25-5
VEHICLE IDENTIFICATION - DESCRIPTION	23-1
VEHICLE IDENTIFICATION NUMBER - DESCRIPTION	Intro.-9
VEHICLE LEAD DIAGNOSIS AND CORRECTION - DIAGNOSIS AND TESTING	22-10
VEHICLE SAFETY CERTIFICATION LABEL - DESCRIPTION	Intro.-10
VEHICLE SPEED SENSOR, DESCRIPTION	21-149
VEHICLE THEFT SECURITY - DESCRIPTION	8Q-1
VEHICLE THEFT SECURITY - OPERATION	8Q-2
VENT - INSTALLATION, BODY	23-61
VENT - REMOVAL, BODY	23-61
VERIFICATION - STANDARD PROCEDURE, VALVE TIMING	9-142,9-65
VERTICAL GUIDE BAR - INSTALLATION, FRONT DOOR	23-25
VERTICAL GUIDE BAR - REMOVAL, FRONT DOOR	23-25
VIBRATION - DIAGNOSIS AND TESTING, TIRE NOISE OR	22-9
VIBRATION DAMPER - INSTALLATION	9-122, 9-201,9-52
VIBRATION DAMPER - REMOVAL	9-122,9-201, 9-52
VIEW MIRROR - INSTALLATION, INSIDE REAR	23-65
VIEW MIRROR - INSTALLATION, SIDE	23-40
VIEW MIRROR - REMOVAL, INSIDE REAR	23-65
VIEW MIRROR - REMOVAL, SIDE	23-40
VIEW MIRROR GLASS - INSTALLATION, SIDE	23-41
VIEW MIRROR GLASS - REMOVAL, SIDE	23-41
VIEW MIRROR TRIM BEZEL - INSTALLATION, SIDE	23-25
VIEW MIRROR TRIM BEZEL - REMOVAL, SIDE	23-25
VISOR - INSTALLATION, SUN	23-65
VISOR - REMOVAL, SUN	23-65
VOLT SUPPLY - PCM OUTPUT - OPERATION, 5	8E-10
VOLTAGE DROP - STANDARD PROCEDURE, TESTING FOR A	8W-01-10
VOLTAGE POTENTIAL - STANDARD PROCEDURE, TESTING OF	8W-01-9
VOLTAGE REGULATOR - DESCRIPTION	8F-33
VOLTAGE REGULATOR - OPERATION	8F-33
VOLTAGE TEST - STANDARD PROCEDURE, OPEN-CIRCUIT	8F-12
WARNING - COOLING SYSTEM WARNINGS	7-1
WARNING - SAFETY PRECAUTIONS AND WARNINGS	23-1
WARNING - WARNINGS AND CAUTIONS	19-1, 19-11
WARNING - WARNINGS AND CAUTIONS	2-2, 2-27
WARNING - WINDSHIELD SAFETY PRECAUTIONS	23-78
WARNING, BRAKES - BASE	5-3
WARNING, RESTRAINTS	8O-3
WARNING/INDICATOR LAMPS - DIAGNOSIS AND TESTING, INSTRUMENT CLUSTER	8J-3
WARNINGS AND CAUTIONS, WARNING	19-1, 19-11
WARNINGS AND CAUTIONS, WARNING	2-2,2-27
WARNINGS, DESCRIPTION - SAFETY PRECAUTIONS	24-3,24-59
WARNINGS, GENERAL	8W-01-7
WARNINGS, WARNING - COOLING SYSTEM	7-1
WARNINGS, WARNING - SAFETY PRECAUTIONS	23-1
WASHER HOSES - INSTALLATION	8R-17
WASHER HOSES - REMOVAL	8R-17
WASHER NOZZLE - INSTALLATION, FRONT	8R-6
WASHER NOZZLE - INSTALLATION, REAR	8R-14
WASHER NOZZLE - REMOVAL, FRONT	8R-6
WASHER NOZZLE - REMOVAL, REAR	8R-14
WASHER PUMP MOTOR - INSTALLATION	8R-18
WASHER PUMP MOTOR - REMOVAL	8R-17
WASHER PUMP MOTOR - RHD - INSTALLATION	8R-18
WASHER PUMP MOTOR - RHD - REMOVAL	8R-18
WASHER RESERVOIR - INSTALLATION	8R-19
WASHER RESERVOIR - REMOVAL	8R-19
WASHER SYSTEM - DIAGNOSIS AND TESTING	8R-5
WATER DAM - INSTALLATION, FRONT DOOR	23-27
WATER DAM - INSTALLATION, REAR DOOR	23-33
WATER DAM - REMOVAL, FRONT DOOR	23-26
WATER DAM - REMOVAL, REAR DOOR	23-33
WATER LEAKS - DIAGNOSIS AND TESTING	23-2
WATER PUMP, DIAGNOSIS AND TESTING	7-59
WATER PUMP INLET TUBE - INSTALLATION	7-60
WATER PUMP INLET TUBE - REMOVAL	7-60
WATER PUMP/POWER STEERING PUMP ASSEMBLY - ASSEMBLY	7-29
WATER PUMP/POWER STEERING PUMP ASSEMBLY - DESCRIPTION	7-27
WATER PUMP/POWER STEERING PUMP ASSEMBLY - DISASSEMBLY	7-28
WATER PUMP/POWER STEERING PUMP ASSEMBLY - INSTALLATION	7-30
WATER PUMP/POWER STEERING PUMP ASSEMBLY - REMOVAL	7-28
WATTS BELL CRANK - INSTALLATION	2-49
WATTS BELL CRANK - REMOVAL	2-49
WATTS LINK - INSTALLATION	2-51
WATTS LINK - REMOVAL	2-51
WATTS LINK ASSEMBLY - DESCRIPTION	2-48
WATTS LINK ASSEMBLY - DIAGNOSIS AND TESTING	2-49
WATTS LINK ASSEMBLY - OPERATION	2-49
WEAR INDICATORS - DIAGNOSIS AND TESTING, TREAD	22-9
WEAR PATTERNS - DIAGNOSIS AND TESTING, TIRE	22-9
WEATHERSTRIP - INSTALLATION, FRONT AND REAR DOOR OPENING	23-90
WEATHERSTRIP - INSTALLATION, FRONT AND REAR DOOR UPPER SECONDARY	23-90
WEATHERSTRIP - INSTALLATION, FRONT DOOR GLASS RUN	23-90
WEATHERSTRIP - INSTALLATION, FRONT DOOR INNER BELT	23-92
WEATHERSTRIP - INSTALLATION, FRONT DOOR OUTER BELT	23-92
WEATHERSTRIP - INSTALLATION, LIFTGATE	23-92
WEATHERSTRIP - INSTALLATION, REAR DOOR GLASS RUN	23-93
WEATHERSTRIP - INSTALLATION, REAR DOOR INNER BELT	23-93
WEATHERSTRIP - INSTALLATION, SILL SECONDARY	23-93
WEATHERSTRIP - REMOVAL, FRONT AND REAR DOOR OPENING	23-90
WEATHERSTRIP - REMOVAL, FRONT AND REAR DOOR UPPER SECONDARY	23-90
WEATHERSTRIP - REMOVAL, FRONT DOOR GLASS RUN	23-90
WEATHERSTRIP - REMOVAL, FRONT DOOR INNER BELT	23-92
WEATHERSTRIP - REMOVAL, FRONT DOOR OUTER BELT	23-92
WEATHERSTRIP - REMOVAL, LIFTGATE	23-92
WEATHERSTRIP - REMOVAL, REAR DOOR GLASS RUN	23-92
WEATHERSTRIP - REMOVAL, REAR DOOR INNER BELT	23-93
WEATHERSTRIP - REMOVAL, SILL SECONDARY	23-93
WELD LOCATIONS - SPECIFICATIONS	23-119
WHEEL - DESCRIPTION	22-12
WHEEL - DESCRIPTION, BLOWER MOTOR	24-28,24-83
WHEEL - DESCRIPTION, TONE	5-82
WHEEL - INSPECTION, TONE	5-82
WHEEL - INSTALLATION, STEERING	19-26
WHEEL - OPERATION, TONE	5-82
WHEEL - REMOVAL, STEERING	19-26
WHEEL ALIGNMENT - DESCRIPTION	2-52
WHEEL ALIGNMENT - STANDARD PROCEDURE	2-58
WHEEL ALIGNMENT, SPECIFICATIONS	2-60
WHEEL AND WHEEL TRIM CARE, CLEANING	22-13
WHEEL ASSEMBLY (ALUMINUM WHEEL) - INSTALLATION, TIRE	22-7
WHEEL ASSEMBLY (ALUMINUM WHEEL) - REMOVAL, TIRE	22-6
WHEEL ASSEMBLY (STEEL WHEEL) - INSTALLATION, TIRE	22-7
WHEEL ASSEMBLY (STEEL WHEEL) - REMOVAL, TIRE	22-6
WHEEL BALANCE - STANDARD PROCEDURE, TIRE	22-3
WHEEL BEARING AND HUB - DIAGNOSIS AND TESTING	2-6
WHEEL COVER - INSTALLATION	22-14
WHEEL COVER - REMOVAL	22-14
WHEEL CYLINDER - DRUM BRAKE - INSPECTION	5-61
WHEEL CYLINDER - DRUM BRAKE - INSTALLATION	5-61
WHEEL CYLINDER - DRUM BRAKE - REMOVAL	5-60
WHEEL DRIVE REAR - DESCRIPTION, AXLE - FRONT	2-29
WHEEL DRIVE REAR - INSPECTION, AXLE - FRONT	2-33
WHEEL DRIVE REAR - INSTALLATION, AXLE - FRONT	2-33
WHEEL DRIVE REAR - OPERATION, AXLE - FRONT	2-29
WHEEL DRIVE REAR - REMOVAL, AXLE - FRONT	2-29
WHEEL INSPECTION - DIAGNOSIS AND TESTING	22-13
WHEEL MATCH MOUNTING - STANDARD PROCEDURE, TIRE	22-4
WHEEL MOUNTING STUDS - FRONT - INSTALLATION	22-15
WHEEL MOUNTING STUDS - FRONT - REMOVAL	22-14
WHEEL MOUNTING STUDS - REAR - INSTALLATION	22-16
WHEEL MOUNTING STUDS - REAR - REMOVAL	22-16
WHEEL ROTATION - STANDARD PROCEDURE, TIRE	22-6
WHEEL RUNOUT - DIAGNOSIS AND TESTING, TIRE	22-1
WHEEL RUNOUT, SPECIFICATIONS - TONE	5-78
WHEEL, SPECIFICATIONS	22-13

Description	Group-Page
WHEEL SPEED SENSOR - DESCRIPTION, FRONT	5-78
WHEEL SPEED SENSOR - DESCRIPTION, REAR	5-80
WHEEL SPEED SENSOR - INSTALLATION, FRONT	5-80
WHEEL SPEED SENSOR - INSTALLATION, REAR	5-82
WHEEL SPEED SENSOR - OPERATION, FRONT	5-78
WHEEL SPEED SENSOR - OPERATION, REAR	5-81
WHEEL SPEED SENSOR - REMOVAL, FRONT	5-79
WHEEL SPEED SENSOR - REMOVAL, REAR	5-81
WHEEL SPEED SENSOR AIR GAP, SPECIFICATIONS	5-78
WHEEL TRIM CARE, CLEANING - WHEEL	22-13
WHEELHOUSE SPLASH SHIELDS - INSTALLATION, FRONT	23-36
WHEELHOUSE SPLASH SHIELDS - REMOVAL, FRONT	23-36
WIND DEFLECTOR - INSTALLATION	23-85
WIND DEFLECTOR - REMOVAL	23-85
WIND NOISE - DIAGNOSIS AND TESTING	23-3
WINDOW - INSTALLATION, QUARTER	23-76
WINDOW - REMOVAL, QUARTER	23-76
WINDOW DEFOGGER - DESCRIPTION, HEATED	8G-10
WINDOW DEFOGGER - OPERATION, HEATED	8G-10
WINDOW DEFOGGER GRID LINES, STANDARD PROCEDURE - REAR	8G-13
WINDOW DEFOGGER SWITCH, DIAGNOSIS AND TESTING - REAR	8G-11
WINDOW DEFOGGER SYSTEM, DIAGNOSIS AND TESTING - REAR	8G-10
WINDOW MOTOR - INSTALLATION	8N-19
WINDOW MOTOR - REMOVAL	8N-19
WINDOW REGULATOR - INSTALLATION, FRONT DOOR	23-27
WINDOW REGULATOR - INSTALLATION, REAR DOOR	23-34
WINDOW REGULATOR - REMOVAL, FRONT DOOR	23-27
WINDOW REGULATOR - REMOVAL, REAR DOOR	23-34
WINDOW SWITCH - DIAGNOSIS AND TESTING, POWER	8N-18
WINDOW SWITCH - INSTALLATION, POWER	8N-19
WINDOW SWITCH - REMOVAL, POWER	8N-19
WINDOWS - DESCRIPTION, POWER	8N-17
WINDOWS - DIAGNOSIS AND TESTING, POWER	8N-17
WINDOWS - OPERATION, POWER	8N-17
WINDSHIELD - DESCRIPTION	23-77
WINDSHIELD SAFETY PRECAUTIONS, WARNING	23-78
WIPER ARMS - ADJUSTMENT, FRONT	8R-7
WIPER ARMS - INSTALLATION, FRONT	8R-7
WIPER ARMS - INSTALLATION, REAR	8R-15
WIPER ARMS - REMOVAL, FRONT	8R-6
WIPER ARMS - REMOVAL, REAR	8R-14
WIPER ARMS - RHD - ADJUSTMENT, FRONT	8R-7
WIPER BLADE - INSTALLATION, REAR	8R-15
WIPER BLADE - REMOVAL, REAR	8R-15
WIPER BLADE ELEMENTS - INSTALLATION, FRONT	8R-8
WIPER BLADE ELEMENTS - REMOVAL, FRONT	8R-8
WIPER BLADES - CLEANING, FRONT	8R-8
WIPER BLADES - INSTALLATION, FRONT	8R-8
WIPER BLADES - REMOVAL, FRONT	8R-7
WIPER CONDITIONS - DIAGNOSIS AND TESTING, FRONT	8R-3
WIPER MODULE - INSTALLATION, FRONT	8R-9
WIPER MODULE - REMOVAL, FRONT	8R-9
WIPER MODULE - RHD - INSTALLATION, FRONT	8R-10
WIPER MODULE - RHD - REMOVAL, FRONT	8R-10
WIPER MOTOR - DIAGNOSIS AND TESTING	8R-10
WIPER MOTOR - INSTALLATION, FRONT	8R-12
WIPER MOTOR - INSTALLATION, REAR	8R-16
WIPER MOTOR - REMOVAL, FRONT	8R-12
WIPER MOTOR - REMOVAL, REAR	8R-15
WIPER MOTOR - RHD - INSTALLATION, FRONT	8R-13
WIPER MOTOR - RHD - REMOVAL, FRONT	8R-12
WIPER SWITCH - DIAGNOSIS AND TESTING, REAR	8R-16
WIPER SWITCH - INSTALLATION, FRONT	8R-13
WIPER SWITCH - REMOVAL, FRONT	8R-13
WIPER SWITCH - REMOVAL, REAR	8R-17
WIPER SYSTEM - DIAGNOSIS AND TESTING, REAR	8R-5
WIPERS/WASHERS - DESCRIPTION	8R-1
WIPERS/WASHERS - OPERATION	8R-3
WIPER/WASHER SWITCH - DIAGNOSIS AND TESTING, FRONT	8R-13
WIRE SPLICING - STANDARD PROCEDURE	8W-01-15
WIRING DIAGRAMS - DESCRIPTION, HOW TO USE	8W-01-1
WIRING HARNESS - DIAGNOSIS AND TESTING	8W-01-7
WIRING/TERMINAL, SPECIAL TOOLS	8W-01-10
WITHOUT ABS - INSTALLATION, LHD	5-41
WITHOUT ABS - REMOVAL, LHD	5-40
WOOD GRAIN/FLAME DECALS - INSTALLATION	23-41
WOOD GRAIN/FLAME DECALS - REMOVAL	23-41
WORN THREADS - STANDARD PROCEDURE, REPAIR OF DAMAGED OR	9-11,9-158,9-82

SERVICE MANUAL COMMENTS

What errors(s) have you found?

_____

_____

_____

_____

In order for us to assist you, please include as much details as possible when reporting an error

Comments / Suggestions

_____

_____

_____

_____

☐ **Dealership Technician**
Dealer Code: _____

Retail Customer ☐

Manual Title, Year, Number and Page: _____

_____

Your Name: _____

Address: _____

_____

_____

All comments become property of DaimlerChrysler and may be used without compensation.

(FOLD HERE)

NO POSTAGE
NECESSARY
IF MAILED
IN THE
UNITED
STATES

BUSINESS REPLY MAIL

FIRST CLASS MAIL PERMIT NO. 124 CENTER LINE, MI

POSTAGE WILL BE PAID BY ADDRESSEE

DaimlerChrysler Corporation
Dealer Technical Operations
800 Chrysler Drive
CIMS 486-02-76
Auburn Hills, MI 48326-2757

(FOLD HERE)